FENOC

FirstEnergy Nuclear Operating Company

Perry Nuclear Power Station
10 Center Road
Perry, Ohio 44081

Barry S. Allen
Vice President

440-280-5382
Fax: 440-280-8029

August 7, 2007
PY-CEI/NRR-3050L

ATTN: Document Control Desk
United States Nuclear Regulatory Commission
Washington, D.C. 20555

Perry Nuclear Power Plant
Docket Number 50-440
License Number NPF-58

Subject: Perry Nuclear Power Plant Eleventh Inservice Inspection Summary Report

Ladies and Gentlemen:

In accordance with the American Society of Mechanical Engineers Boiler and Pressure Vessel Code, Section XI, "Inservice Inspection," 1989 Edition, Article IWA-6000, the Perry Nuclear Power Plant Eleventh Inservice Inspection Summary Report (Form NIS-1) is enclosed. This report documents the inservice examination activities conducted from return to commercial operation from the tenth refueling outage until completion of the eleventh refueling outage.

There are no regulatory commitments contained in this letter or its enclosure. If there are any questions or if additional information is required, please contact Mr. Thomas A. Lentz, Manager - FENOC Fleet Licensing, at (330) 761-6071.

Sincerely,

Barry S. Allen

Enclosure: FirstEnergy Nuclear Operating Company Perry Nuclear Power Plant
Eleventh Inservice Inspection Summary Report

cc: NRC Region III Administrator
NRC Resident Inspector
NRR Project Manager
Authorized Nuclear Inservice Inspector
Ohio Department of Commerce, Boiler Inspection Section

A047

NRR

Enclosure
PY-CEI/NRR-3050L

FirstEnergy Nuclear Operating Company
Perry Nuclear Power Plant
Eleventh Inservice Inspection Summary Report

FORM NIS-1 OWNERS REPORT FOR INSERVICE INSPECTIONS
As required by the provisions of the ASME Code Rules

1. Owner FirstEnergy Nuclear Generation Corp. & Ohio Edison Co., 76 South Main Street, Akron, OH 44308
(Name and Address of Owner)

2. Plant Perry Nuclear Power Plant, 10 Center Road, Perry, OH 44081
(Name and Address of Plant)

3. Plant Unit 1 4. Owner Certificate of Authorization (if required) N/A

5. Commercial Service Date 11/18/87 6. National Board Number for Unit N/A

7. Components Inspected (only the systems with Class 1 and 2 components are listed in following table)

Component or Appurtenance	Manufacturer or Installer	Manufacturer or Installer Serial No.	PNPP MPL No.	National Board No.
Rx Vessel	GE/CBIN	T-49	1B13	15
Rx Vessel	GE/A&ES	1B13	1B13	64077
Nuclear Boiler System	GE/A&ES	1B21	1B21	64084
Nuclear Boiler System	Pullman Power Products	1B21	1B21	109
Reactor Recirculation System	GE/A&ES	1B33	1B33	64076
Reactor Recirculation System	Pullman Power Products	1B33	1B33	119
CRD Hydraulic Control System	Pullman Power Products	1C11	1C11	92
Standby Liquid Control System	Pullman Power Products	1C41	1C41	108
Containment Atmosphere Monitoring	Johnson Controls	1D23-0064-F	1D23	008
Residual Heat Removal System	Engineers & Fabricators Company	1E12	1E12	1621
Residual Heat Removal System	Pullman Power Products	1E12	1E12	83
Containment Spray System	Pullman Power Products	1E15	1E15	105
Low Pressure Core Spray System	Pullman Power Products	1E21	1E21	85
High Pressure Core Spray System	Pullman Power Products	1E22	1E22	86
Leak Detection System	Johnson Controls	1E31-0068-F	1E31	15
MSIV Leakage Control System	Pullman Power Products	1E32	1E32	104
Reactor Core Isolation Cooling System	Pullman Power Products	1E51	1E51	84

Note: Supplemental sheets in form of lists, sketches, or drawings may be used, provided (1) size is 8½ in. x 11 in., (2) information in items 1 through 6 on this report is included on each sheet , and (3) each sheet is numbered and the number of sheets is recorded at the top of this form.

FORM NIS-1 (Back)

8. Examination Dates 5/7/05 to 5/13/07

9. Inspection Period Identification: Third Period

10. Inspection Interval Identification: Second

11. Applicable Edition of Section XI 1989 Addenda None

12. Date/Revision of Inspection Plan: Rev 11, PNPP Inservice Examination Program Plan, dated 2/22/07

13. Abstract of Examinations and tests. Include a list of examinations and tests and a statement concerning status of work required for the Inspection Plan.

    See attached summary report P0059-0011*

14. Abstract of Results of Examinations and Tests.

    See attached summary report P0059-0011*

15. Abstract of Corrective Measures.

    See attached summary report P0059-0011*

* Report is 180 two-sided pages in length.

We certify that a) the statements made in this report are correct b) the examinations and tests meet the Inspection Plan as required by the ASME Code, Section XI, and c) corrective measures taken conform to the rules of the ASME Code, Section XI.

Certificate of Authorization No. (if applicable) N/A Expiration Date N/A

Date 7/17/07 Signed FENGENCO & OE By Richard M. Fili
Owner

CERTIFICATE OF INSERVICE INSPECTION

I, the undersigned, holding a valid commission issued by the National Board of Boiler and Pressure Vessel Inspectors and the State or Province of Ohio and employed by Hartford Steam Boiler of Hartford, CT have inspected the components described in this Owner's Report during the period 5/7/05 to 5/13/07, and state that to the best of my knowledge and belief the Owner has performed examinations and taken corrective measures described in this Owner's Report in accordance with the inspection plan and as required by the ASME Code, Section XI.

By signing this certificate neither the Inspector nor his employer makes any warranty, expressed or implied, concerning the examinations and corrective measures described in the Owner's Report. Furthermore, neither the Inspector nor his employer shall be liable in any manner for any personal injury or property damage or a loss of any kind arising from or connected with this inspection.

Thomas G Lapp
Inspector's Signature

Commissions NB9330 "N", "I", & "A", Ohio Commission
National Board, State, Province, and Endorsements

Date 7/18/07

1. Owner FirstEnergy Nuclear Generation Corp. & Ohio Edison Co., 76 South Main Street, Akron, OH 44308
(Name and Address of Owner)

2. Plant Perry Nuclear Power Plant, 10 Center Road, Perry, OH 44081
(Name and Address of Plant)

3. Plant Unit 1 4. Owner Certificate of Authorization (if required) N/A

5. Commercial Service Date 11/18/87 6. National Board Number for Unit N/A

7. Components Inspected (only the systems with Class 1 and 2 components are listed in following table)

Component or Appurtenance	Manufacturer or Installer	Manufacturer or Installer Serial No.	PNPP MPL No.	National Board No.
Integrated Leak Rate System	Pullman Power Products	1E61	1E61	120
Fuel Transfer System	General Electric	1F42	1F42	64079
Reactor Water Cleanup System	GE/A&ES	1G33	1G33	64075
Reactor Water Cleanup System	Pullman Power Products	1G33	1G33	100
Fuel Pool Cleaning System	Pullman Power Products	1G41	1G41	95
Suppression Pool Drain and Cleanup System	Pullman Power Products	1G42	1G42	96
Suppression Pool Makeup System	Johnson Controls	1G43-0065-F	1G43	019
Containment Vessel Purge System	Pullman Power Products	1M14	1M14	113
Drywell Vacuum Relief System	Pullman Power Products	1M16	1M16	115
Containment Vacuum Relief System	Pullman Power Products	1M17	1M17	87
Combustible Gas Control System	Pullman Power Products	1M51	1M51	106
Main Steam System	Pullman Power Products	1N11	1N11	111
Main, Reheat, and Miscellaneous Drains	Pullman Power Products	1N22	1N22	112
Feedwater System	Pullman Power Products	1N27	1N27	89
Condenser Transfer and Storage System	Pullman Power Products	1P11	1P11	102
Mixed Bed Demineralizer Water Sys.	Pullman Power Products	1P22	1P22	73
Nuclear Closed Cooling System	Pullman Power Products	1P43	1P43	101
Containment Chilled Water System	Pullman Power Products	1P50	1P50	103
Service Air System	Fisher Controls	6393471	1P51	6170
Instrument Air System	Pullman Power Products	1P52	1P52	74
Post Accident Sampling System	Johnson Controls	1P87	1P87	034
Containment System	Newport News	NNI-OS-02	1T23	N/A

INSERVICE INSPECTION SUMMARY REPORT

FOR

PERRY NUCLEAR POWER PLANT

(PNPP)

UNIT #1

LOCATED AT: 10 Center Road
Perry, Ohio 44081

OWNER: FirstEnergy Nuclear Generation Corp. & Ohio Edison Co.
76 South Main Street
Akron, Ohio 44308

REACTOR SUPPLIER: General Electric Corporation
175 Curtner Avenue
San Jose, California 95125

NRC DOCKET NUMBER:	50-440
FACILITY FULL POWER LICENSE:	NPF-58
CAPACITY, Mwe:	1305
COMMERCIAL OPERATION DATE:	November 18, 1987
INSPECTION INTERVAL:	November 18, 1998 - May 17, 2009
INSPECTION PERIOD:	Third (Nov 18, 2005 - May 17, 2009)
REFUELING OUTAGE:	RFO11
DOCUMENT COMPLETED:	July 17, 2007

ABSTRACT

Perry Nuclear Power Plant (PNPP) Unit #1 was shutdown for approximately eight weeks to refuel the reactor vessel [Refueling Outage 11(RFO11)] and perform plant maintenance commencing April 2, 2007. During this time period, and during the preceding operating cycle, inservice examinations were performed to comply with plant Technical Specifications and the 1989 Edition of American Society of Mechanical Engineers (ASME) Section XI with no Addenda.

ASME Section XI requires reporting of examination results for Class 1 and 2 pressure retaining components and their supports. This report summarizes the results of Class 1 and 2 examinations, and also Class 3 and Augmented examinations, which were performed in accordance with the schedules within PNPP's Inservice Examination Program Plan (ISEP), Revision 11.

Automated and manual ultrasonic examinations were performed on the lower course, and one upper course, reactor pressure vessel dissimilar metal nozzle to safe-end welds (previously Category B-F, now Risk Informed R-A). These included one of the two Recirculation outlet (N1) nozzles, the 10 recirculation inlet (N2) nozzles, the two Jet Pump Instrumentation (N9) nozzles, and Feedwater nozzle N4E. These examinations met the new ASME Section XI, Appendix VIII, Supplement 10 requirements. No relevant indications were found in the lower course welds and pre-existing flaws in the upper course N4E weld were found to be unchanged.

Routine Section XI volumetric, surface and visual examinations were performed on Class 1, 2 and 3 piping systems and pressure retaining components. Class 1 piping weld examinations included application of Risk Informed Inservice Inspection (ISI), which is documented in Relief Request IR-049.

In-vessel examinations consisted of the required Code visual examinations along with augmented visual examinations of numerous vessel interior components. The augmented visual examinations were primarily conducted in accordance with the Boiling Water Reactor Vessel and Internals Project (BWRVIP) inspection guidelines. Follow-up examinations of the minor jet pump wedge wear that was found on jet pump 15 in RFO10, and which was evaluated as acceptable for operation through RFO11, were performed and the wear was found to be unchanged (documented in Condition Reports (CRs) 05-02242 and 07-18578). Follow-up examinations were also performed on the vessel interior crud deposits found during RFO9. The crud deposits were found to be essentially unchanged (documented in CRs 03-01995 & 05-01928). Finally, follow-up examinations were performed on the SHSAM bolts for the anti-rotation pin wear found in RFO9 and the wear was found to be acceptable for another cycle of operation (documented in CRs 03-02831, 05-01794 and 07-18329).

Other than described above, there were no reportable indications.

RFO11 was the first refueling outage of the third Inspection Period within Perry's second 10-Year Inservice Inspection Interval. With the completion of the Cycle 11 and RFO11 examinations, approximately 55% of the examinations scheduled for the third period are done. The examinations resulted in a complete and acceptable program in that all indications were evaluated for acceptance in accordance with ASME Section XI, and all required corrective actions and/or evaluations were completed.

CONTENTS

PAGE

1.0 INTRODUCTION ---------- 4

2.0 REFUELING OUTAGE DURATION ---------- 4

3.0 CODE REQUIREMENTS ---------- 4

4.0 INSPECTION ---------- 4

5.0 CERTIFICATIONS ---------- 4

5.1 Personnel ---------- 4

5.2 Equipment and Materials ---------- 6
Thermometers ---------- 6
Magnetic Particle Equipment ---------- 6
Magnetic Particle Materials ---------- 6
Dye Penetrant Materials ---------- 6
Ultrasonic Flaw Detectors ---------- 7
Ultrasonic Couplants ---------- 7
Transducers ---------- 7

6.0 CALIBRATION STANDARDS ---------- 9

7.0 PROCEDURES AND INSPECTION PLANS---------- 9

8.0 RELIEF REQUESTS ---------- 10

9.0 SCHEDULE CHANGES ---------- 13

10.0 EXAMINATION SUMMARY RESULTS ---------- 13

11.0 NIS-2/NR-1 ---------- 14

APPENDICES

A. CYCLE 11 & RFO11 EXAMINATIONS RESULTS SUMMARY ---------- 17
- Cycle 11 & RFO11 Scheduled Inservice Examinations------- 18
- Cycle 11 & RFO11 Preservice Examinations ---------- 45

B. CYCLE 11 & RFO11 NIS-2/NR-1 FORMS ---------- 48

LAST PAGE ---------- 180

1.0 INTRODUCTION

The information provided herein is supplied to document compliance with ASME Boiler and Pressure Vessel (B&PV) Code, Section XI requirements for reporting inservice inspection results for Class 1 and Class 2 pressure retaining components and their supports. Examination results of Class 3 and Augmented components and their associated supports are included in this report as supplemental information.

This report covers inservice inspection activities performed from Perry Nuclear Power Plant (PNPP)'s return to commercial operation after refueling outage RFO10 through the completion of RFO11.

Included in this report are the following:

- Personnel and Equipment Listings
- Examination Results Summaries
- NIS-2/NR-1 Reports
- Other Pertinent Information

2.0 REFUELING OUTAGE DURATION

The Perry Nuclear Power Plant, Unit #1, was shutdown for RFO11 from April 2, 2007 to May 13, 2007. The plant returned to commercial operation on May 13, 2007, at 04:31. This is noted as the time when the generator was synchronized to the grid.

3.0 CODE REQUIREMENTS

The inservice inspections were conducted in accordance with the requirements of ASME B&PV Code, Section XI, Division 1, 1989 Edition, no Addenda, with Code Cases N-307-3, N-416-2, N-457, N-460, N-461-1, N-491-2, N-498-1, N-509, N-522, N-524, N-526, N-546, N-552, N-566-2, N-568, N-578 as applied in PNPP's Risk-Informed Class 1 Piping program, N-586, N-599, N-601, N-613-1, N-623, N-624, N-647, N-648-1, N-652, N-663, N-664, and N-695.

4.0 INSPECTION

Inspection activities were conducted by Authorized Nuclear Inservice Inspection personnel from the Hartford Steam Boiler Company.

5.0 CERTIFICATIONS

Personnel, equipment, and transducer certifications were maintained as required by code and procedures. This section identifies the personnel and equipment utilized in the performance of inservice examinations during Cycle 11 operations and RFO11. Certification records for personnel and equipment are kept on site and are available for review.

5.1 Personnel

Nondestructive Examination (NDE) personnel were qualified and certified to perform specific nondestructive examinations in accordance with PNPP or approved vendor procedures as verified by PNPP personnel and the Authorized Nuclear Inservice Inspector.

The following is a listing of personnel responsible for the performance of the NDE activities related to ISI during Cycle 11 operations and RFO11:

ISI NDE PERSONNEL

Name	UT	PT	MT	VT
Anderson, Edward	NA	NA	NA	III++
Andrie, Bryan	NA	NA	NA	II+
Balcom, Allen	NA	NA	NA	II++
Blood, Eric	NA	NA	NA	II+
Boyd, Rodney	NA	NA	NA	II++
Boyette, Nathan	NA	NA	NA	II++
Brees, Michael	NA	NA	NA	II+
Buck, George	III**	III	III	III
Catron, Earnest	III**	II	II	NA
Clare, John	NA	NA	NA	II+
Cox, Stephen	II**	NA	NA	II
Crane, Martin	II**	NA	NA	NA
Drazich, Rodney	NA	NA	NA	III++
Dummer, Brad	III**	NA	NA	NA
Fish, Kevin	II**	NA	NA	NA
Gauthier, Clint	II**	NA	NA	NA
Gaskins, Vernard	NA	NA	NA	II
Gilliard, John	III**	NA	NA	NA
Ginder, Todd	II**	NA	NA	II
Green, Jack	NA	NA	NA	II+++
Green, Jerry	NA	NA	NA	III++
Guillote, Jonathan	II**	NA	NA	NA
Hancock, David	II**	NA	NA	II
Holmes, George	NA	NA	NA	II++
Henry, Douglas	NA	NA	NA	III++
Horn, John	NA	NA	NA	II++
Hurlburt, Vivus	NA	NA	NA	II++
Jenniges, Michael	NA	NA	NA	II
Joffe, Christopher	NA	NA	NA	II++
Johns, Shelvie	NA	NA	NA	II+
Jopko, Steve	NA	NA	NA	II
Kee, Jon	NA	NA	NA	II++
Kirkendall, Dennis	NA	NA	NA	II++
Lesnjak, Damijan	NA	II	II	NA
Lynch, Norbon	NA	NA	NA	II+
Matthys, Russell	NA	NA	NA	II
Martinez, William	NA	NA	NA	II++
McClure, Matthew	NA	NA	NA	II+
Messenger, John	NA	NA	NA	III
Montgomery, Joseph	II**	NA	NA	NA
Munson, Dewey	III**	III	III	NA
Musgrove, Floyd	NA	NA	NA	II+++
Owens, Johnny	NA	NA	NA	II+
Patterson, John	NA	NA	NA	II+
Pelton, Corey	NA	NA	NA	II++
Phelps, Antwonette	NA	NA	NA	II+
Rachal, Andre	II**	NA	NA	NA
Richardt, Joseph	NA	NA	NA	II+
Schroeder, Daniel	NA	NA	NA	II++
Shearer, Levi	NA	NA	NA	II
Sipple, Bruce	NA	NA	NA	II+++
Snyder, Steve	II**	II	II	II
Steinbauer, Troy	NA	NA	NA	II**
Tepsick, Michael	NA	NA	NA	III

ISI NDE PERSONNEL CONT.

Name	UT	PT	MT	VT
Thomas, Dave	NA	NA	NA	III++
Todd, Eugene	NA	NA	NA	II+
VanHecke, Charles	II**	NA	NA	NA
Walters, Donald	III**	NA	NA	NA
Warren, Jason	NA	NA	NA	II+
Wolf, Ronald	NA	NA	NA	II+
Williams, Larry	NA	NA	NA	II+
Winney, Ryan	NA	NA	NA	II++
Wirtz, Charles	NA	II	II	III

+ - Limited to VT-2 only
++ - Limited to in-vessel VT-1 and VT-3 examinations only
+++ - Limited to VT-3 only
** - PDI qualified personnel for manual and/or automated UT

5.2 Equipment and Materials

The equipment and materials used during the performance of the nondestructive examinations were certified and/or calibrated in accordance with site procedures or approved vendor procedures and verified by the Quality Assurance Department and the Authorized Nuclear Inservice Inspector.

The following is a listing of NDE equipment and materials used for the performance of the NDE work activities related to ISI during Cycle 11 operations and RFO11:

THERMOMETERS

Manufacturer	Model No.	PNPP M&TE No.
OMEGA	450 Digital	L70Q0463J
OMEGA	450 Digital	L80Z0103E
OMEGA	450 Digital	L80Z0103F
OMEGA	450 Digital	L80Z0103K
OMEGA	450 Digital	L80Z0103P
OMEGA	450 Digital	L80Z0103R

MAGNETIC PARTICLE EQUIPMENT

Manufacturer	Model No.	PNPP M&TE No.
Parker	B-300 AC Yoke	PAR-ACMT-049
Parker	B-300 AC Yoke	PAR-ACMT-058

MAGNETIC PARTICLE MATERIALS

Manufacturer	Type	Batch No.
Magnaflux	8A Red Powder	94B029

DYE PENETRANT MATERIALS

Cleaner	Penetrant	Developer
SKC-S 00K03K	SKL-SP1 05A06K	SKD-S2 06C05K

ULTRASONIC FLAW DETECTORS

Manufacturer	Model	Serial No.
Stavely	SONIC-136P	136-786J
Panametrics	Epoch 4	031536006
Panametrics	Epoch 4	031539806
Panametrics	Epoch 4	031540506
Panametrics	Epoch 4	031573111
Panametrics	Epoch 4	031573311
Panametrics	Epoch 4	031574712
Krautkramer	USK-7	31459-2830
General Electric*	GERIS-2000	System #3
Zetec+	MICROTOMO	166931

* Used for RPV Nozzle to Shell Weld and Nozzle Inner Radii exams.
\+ Used for Nozzle to Safe-End dissimilar metal weld exams.

ULTRASONIC COUPLANTS

Manufacturer	Type	Batch No.
Sonotech	Ultragel II	95325
Sonotech	Ultragel II	98325
Sonotech	Ultragel II	99125

TRANSDUCERS USED FOR MANUAL EXAMS

Manuf.	Type	Freq.	Angle	Size	Ser No.
KBA	Comp-G	2.25 MHz	45°	.25" Dia.	003PBN
KBA	Gamma	5.0 MHz	0°	.25" Dia.	003V0C
KBA	Comp-G	2.25 MHz	45°&70°	.5" Dia.	00DTX6*
KBA	Comp-G	5.0 MHz	45°	.25" Dia.	00XB3P
KBA	Comp-G	5.0 MHz	45°&70°	.25" Dia.	00XKHL
KBA	Comp-G	2.25 MHz	45°	.375" Dia.	010DY4
KBA	Comp-G	2.25 MHz	45°&60°	.375" Dia.	010DY6
KBA	Comp-G	2.25 MHz	45°	.375" Dia.	010HW1
KBA	Comp-G	2.25 MHz	45°	.5" Dia.	010HXP
KBA	Comp-G	2.25 MHz	45°&70°	.25" Dia.	01190H
KBA	Comp-G	5.0 MHz	45°	.25" Dia.	0148D0
KBA	Comp-G	5.0 MHz	45°	.375" Dia.	01C7C9
KBA	Comp-G	5.0 MHz	45°	.5" Dia.	01CWDY
KBA	Comp-G	2.25 MHz	45°	.375" Dia.	01CX29
KBA	Comp-G	2.25 MHz	45°	.5" Dia.	01CYT4
KBA	Comp-G	2.25 MHz	25°	.5" Dia.	01D65R
KBA	MSEB4E	4.0 MHz	0°	4 x 10 mm	06438
KBA	MSWQC	2.25 MHz	45°&70°	.25" Dia.	24711*
KBA	Gamma	2.25 MHz	0°	1.0" Dia.	G14209SP
KBA	Gamma	5.0 MHz	0°	.25" Dia.	J29329
Panametrics	A111S	10.0 MHz	0°	.5" Dia.	212161*
Panametrics	A111S	10.0 MHz	0°	.5" Dia.	268287

* Denotes Perry transducers; all others supplied by GE

GERIS(Auto) & MANUAL RPV EXAM TRANSDUCERS

Manuf.	Type	Freq.	Angle	Size	Ser No.
KBA	SWS	1.0 MHz	70°	.5" x 1"	010HX0*
KBA	SWS	1.0 MHz	70°	.5" x 1"	010HX2*
KBA	SWS	1.0 MHz	70°	.5" x 1"	010HX4*
KBA	SWS	1.0 MHz	45°	.5" x 1"	010HX6*
KBA	SWS	1.0 MHz	60°	.5" x 1"	010HX9*
KBA	SWS	1.0 MHz	45°	.5" x 1"	011784*
KBA	SWS	1.0 MHz	45°	.5" x 1"	011785*
RTD	L 2-St	2.0 MHz	60°L	(30x25)mm	04-12
RTD	T 1-St	1.0 MHz	68°	(32x16)mm	04-22
RTD	T 1-St	1.0 MHz	68°	(32x16)mm	04-23
RTD	T 1-St	1.0 MHz	45°	(32x22)mm	05-1484
RTD	T 1-St	1.0 MHz	45°	(32x22)mm	05-1485
RTD	L 2,25	2.25 MHz	0°	1" Dia.	05-1517
RTD	T 1-St	1.0 MHz	45°	(32x22)mm	05-164
RTD	T 1-St	1.0 MHz	65°	(32x17)mm	05-168
RTD	T 1-St	1.0 MHz	65°	(32x17)mm	05-169
RTD	TRL 2-St	2.0 MHz	70°L	2(12x25)mm	05-170
RTD	T 1-St	1.0 MHz	45°	(32x22)mm	06-273
RTD	T 1-St	1.0 MHz	45°	(32x22)mm	06-275
RTD	TRL 2-St	2.0 MHz	70°L	2(12x25)mm	06-495
RTD	TRL 2-St	2.0 MHz	70°L	2(12x25)mm	97-676
SIGMA	SDC3	3.0 MHz	60°L	2(1.1"x.62")	22BC-03007*
SIGMA	SDC3	3.0 MHz	60°L	2(1.1"x.62")	22BC-03008*
Harrisonic	Spectrum	10.0 MHz	0°	.5" Dia.	8158
Harrisonic	Spectrum	10.0 MHz	0°	.5" Dia.	8270*

* Denotes used for manual exams; all other used for GERIS System.

SMART(Auto) & MANUAL SAFE-END WELD TRANSDUCERS

Manuf.	Type	Freq.	Angle	Size	Ser No.
KBA	Comp-G	2.25 MHz	45°	.25" Dia.	00XMOD
RTD	TRL2-Aust	2.0 MHz	60°L	2(10x18)mm	00-343
RTD	TRL2-Aust	2.0 MHz	45°L	2(7x10)mm	03-177*
RTD	TRL2-Aust	2.0 MHz	60°L	2(7x10)mm	03-178*
RTD	TRL1-Aust	1.0 MHz	45°L	2(15x25)mm	03-682
RTD	TRL1-Aust	1.0 MHz	60°L	2(15x25)mm	03-683
RTD	TRL2-Aust	2.0 MHz	70°L	2(10x18)mm	04-307
RTD	TRL1-Aust	1.0 MHz	60°L	2(10x18)mm	04-317
RTD	TRL2-Aust	2.0 MHz	45°L	2(15x25)mm	04-318
RTD	TRL2-Aust	2.0 MHz	60°L	2(15x25)mm	04-323
RTD	TRL1.5-Aust	1.5 MHz	38°L	2(10x18)mm	05-1350*
RTD	L 2,25	2.25 MHz	0°	1" Dia.	05-1517
RTD	TRL1-Aust	1.0 MHz	45°L	2(10x18)mm	05-159

SMART(Auto) & MANUAL SAFE-END WELD TRANSDUCERS CONT.

Manuf.	Type	Freq.	Angle	Size	Ser No.
RTD	T1,5-Aust	1.5 MHz	45°	Ell(24x17)mm	06-505
RTD	T1,5-Aust	1.5 MHz	45°	Ell(24x17)mm	98-154
RTD	TRL2-Aust	2.0 MHz	45°L	2(10x18)mm	98-166

* Denotes used for manual exams; all other used for SMART System.

6.0 CALIBRATION STANDARDS

Ultrasonic calibration standards used for ISI related work activities during Cycle 11 operations and RFO11 are as listed below:

CALIBRATION STANDARD IDENTIFICATION NUMBERS			
PY-4-XX1-SS	PY-12-100-CS	PY-26-XX2-CS	PY-STUD-RR-3-CS
PY-6-80-CS	PY-16-100-CS	PY-123-1-RPV	PY-SE-BI-1
PY-6-120-CS	PY-18-40-CS	PY-124-1-RPV	PY-SE-BI-4
PY-6-XX1-CS-F	PY-18-STD-CS	PY-128-1-RPV	PY-SE-BI-5
PY-8-100-CS	PY-20-40-CS	PY-NUT-RPV-1-A	PY-VALVE-XX1-CS
PY-12-40-CS	PY-24-40-CS	PY-STUD-1-RPV-A	PY-VALVE-XX2-CS
PY-12-80-CS	PY-24-STD-CS	PY-STUD-MS-2.25-CS-1	CAL-STEP-151

7.0 PROCEDURES AND INSPECTION PLANS

The examination procedures and inspection plans used during Cycle 11 operations and RFO11 were as follows:

Number	Rev	Title
Perry NDE Procedures:		
NQI-0941	11	Liquid Penetrant Examination
NQI-0942	9	Magnetic Particle Examination
NQI-0944	9	Ultrasonic Examination (General Procedure)
NQI-1042	12	Visual Examination
Inspection Plans used with NQI-0944:		
NDE-002	6	Ultrasonic Instrument Linearity Verification
NDE-008	10	Manual Ultrasonic Examination of Ferritic Piping Welds
NDE-012	4	Straight Beam Ultrasonic Examination of Bolts and Studs
NDE-018	9	Procedure for Ultrasonic Examination of Stainless Steel (Austenitic) Piping Welds for Intergranular Stress Corrosion Cracking
NDE-019	4	Ultrasonic Examination of Flued Head Penetration Attachment Welds
NDE-020	2	Ultrasonic Examination of Reactor Pressure Vessel (RPV) Nut Threads and Flange Threads
NDE-030	2	Manual Ultrasonic Examination of Valve Body Welds
NDE-035	0	Ultrasonic Examination of Piping Base Metal adjacent to Socket Welds

PROCEDURES AND INSPECTION PLANS CONT.

Number	Rev	Title
General Electric NDE Procedures:		
GE-PDI-UT-10	Rev. 2	PDI Generic Procedure for The Ultrasonic Examination of Dissimilar Metal Welds
GE-UT-209	Ver. 18	Procedure for Automated Ultrasonic Examination of Dissimilar Metal Welds, and Nozzle to Safe-End Welds
GE-UT-300	Ver. 10	Procedure for Manual Examination of Reactor Vessel assembly Welds in Accordance with PDI With PDQS
GE-UT-304	Ver. 8	Procedure for Manual Ultrasonic Planar Flaw Sizing in Vessel Materials With PDQS
GE-UT-309	Ver. 10	Procedure for Manual Ultrasonic Planar Flaw Sizing of Nozzle Inner Radius and Bore Regions With PDQS
GE-UT-311	Ver. 15	Procedure for Manual Ultrasonic Examination of Nozzle Inner Radius, Bore and Selected Nozzle to Vessel Regions With PDQS
GE-UT-705	Ver. 5	Procedure for The Examination of Reactor Pressure Vessel Nozzle Inner Radius and Nozzle To Vessel Welds With The GERIS 2000 OD IN Accordance With Appendix VIII
GE-VT-206	Ver. 8	Procedure for Invessel Visual Inspection (IVVI of BWR 6 RPV Internals

8.0 RELIEF REQUESTS

Due to geometric, metallurgical, and physical limitations, some of the items scheduled for examination during RFO11 received partial examinations. Within the limitations, examinations were completed to the greatest extent practical. For those Code exams in which the examination coverage achieved was less than 90%, relief requests have been submitted and approved.

Additionally, where it has been determined that conformance with any other examination requirements of ASME Section XI is impractical; PNPP has requested relief from the examination requirements.

The following listing summarizes all the relief requests that have been submitted to and approved by the Nuclear Regulatory Commission (NRC) for PNPP's second 10-year Inspection Interval:

RR NO/REV	SYSTEM	TYPE RELIEF	CATEG	ITEM NO
IR-001 R-2	Reactor Pressure Vessel	Partial Exams	B-A B-D	B1.21 B1.22 B1.40 B3.90 B3.100 B4.11

RELIEF REQUESTS CONTINUED

RR NO/REV	SYSTEM	TYPE RELIEF	CATEG	ITEM NO
IR-007 R-1	Residual Heat Removal, Low Pressure Core Spray, High Pressure Core Spray, Reactor Core Isolation-Cooling, Feedwater, Reactor Water Cleanup, Main Steam	Partial Exams	B-K-1	B10.10
IR-009 R-1	Reactor Pressure Vessel	Partial Exams	B-O	B14.10
IR-012 R-2	Main Steam, Residual Heat Removal, High Pressure Core Spray, Feedwater	Partial Exams	C-C	C3.10 C3.20
IR-013 R-1	High Pressure Core Spray, Low Pressure Core Spray, Residual Heat Removal,	No Exams	C-G	C6.10
IR-015 R-1	Reactor Water Cleanup, Residual Heat Removal, Low Pressure Coolant-Injection	Partial Exams	C-C	C3.20
IR-018 R-1	Residual Heat Removal	Partial Exams	B-K-1	B10.10
IR-019 R-1	Control Rod Drive, Residual Heat Removal, High Pressure Core Spray	Partial Exams	C-C	C3.20
IR-021 R-4	Main Steam, Emergency Closed Cooling, Emergency Service Water	No Exams	D-B	D2.20
IR-023 R-1	All with Snubbers	Alternate Sampling Plan	Tech-Spec	N/A
IR-024 R-1	Reactor Pressure Vessel	Partial Exams	B-F	B5.10
IR-025 R-1	Main Steam	Alternative Exams	B-K-1	B10.10
IR-026 R-1	Main Steam, Feedwater	Alternative Exams	C-C	C3.20
IR-027 R-1	Standby & HPCS Diesel, Fuel Oil	Alternative Exams	D-B	D2.20
IR-029 R-1	Reactor Recirculation	Alternate Weld Selection	B-J	B9.11
IR-030 R-1	Reactor Pressure Vessel	Alternate Exam for Circ. Shell Welds	B-A	B1.11
IR-032 R-0	Containment	Substitute App J test for VT-3	E-D	E5.10 E5.20
IR-034 R-0	Containment	Inspect new coating IAW coating program	N/A	N/A
IR-035 R-0	Containment	Pre-removal coating inspection	N/A	N/A
IR-037 R-0	Containment	Delete successive exam for repairs	E-C	N/A
IR-038 R-0	Containment	Alternative to torque and tension test	E-G	E8.20
IR-039 R-0	Containment	Alternative to VT-3 lighting and resolution	N/A	N/A

RELIEF REQUESTS CONTINUED

RR NO/REV	SYSTEM	TYPE RELIEF	CATEG	ITEM NO
IR-040 R-0	Containment	Alternate UT thickness	N/A	N/A
IR-041 R-0	Containment	Alternate Repair Records	N/A	N/A
IR-042 R-0	Reactor Vessel	Alternate Examination	B-H	B8.10
IR-043 R-0	Reactor Water Cleanup	Alternate Categorization	B-M-1	B12.30
IR-044 R-0	Reactor Vessel	Use of Code Case N-627	B-G-1	B6.10
IR-045 R-0	Reactor Vessel	Use of Code Case N-623	B-A	B1.30 B1.40
IR-046 R-0	Reactor Vessel	Alternate Length Sizing Criteria	B-A	B1.10 B1.20
IR-048 R-0	N/A	Alternate UT Annual Training Requirements	N/A	N/A
IR-049 R-0	Class 1 Piping	Risk-Informed Application	B-F & B-J	All
IR-053 R-0	Re-rating for Class 3 systems	Allow use later Edition and Addenda	N/A	N/A
PT-001 R-1	Various non-isolable (from the RPV Boundary) Class 2 Components	Alternate System and Inservice Tests	C-H	C7.30 C7.70
PT-006 R-1	All Pressure Retaining Components within the ISI Boundary	Use of Code Case N-546	B-P C-H D-A, B & C	All for Press. Testing
PT-007 R-1	Class 3 Safety Relief Valve Discharge Piping	Alternate Hydrostatic Test	D-A	D1.10

Notes:

1. Relief Requests IR-016, IR-017, IR-022, and PT-003 were withdrawn in the 1st Inspection Interval; IR-004, IR-005, IR-006, IR-008, IR-010, IR-011, IR-014, IR-020, IR-028, IR-031, PT-002, PT-004 and PT-005 were withdrawn in the 2nd Inspection Interval; IR-002, IR-033, IR-050, IR-051 and IR-052 were superseded by the NRC approval of Code Cases N-307-3, N-599, N-695, N-663, and N-613 respectively; and IR-036, IR-047 and PT-008 were withdrawn without ever being approved.
2. For those Cycle 11 and RFO11 Code required examinations where the examination coverage was limited, the applicable relief request is referenced in the "remarks" column of the Examinations Results Summary (Appendix A) for the particular examination item.

9.0 SCHEDULE CHANGES

Scheduling changes were made during RF011 to facilitate the examinations, or to account for unforeseen physical or schedule interferences, or radiological conditions. These changes differ from the schedule in Revision 11 of PNPP's Inservice Examination Program (ISEP).

The changes, which will be incorporated in the next revision to the ISEP, are as follows:

MARK NO.	DESCRIPTION AND REASON FOR CHANGE
1B13-38/03-FW	Under Order 200173592, Control Rod Drive 38/03 housing to flange weld was scheduled for a penetrant (PT) examination. However, it was found that there were permanent braided lines lying across the weld. CRD flange weld 1B13-54/15-FW was substituted in its place as it had no obstructions. Document Change Request Notification 600379351 was generated for revision of the ISEP to reflect the substitution.
1E12-H0675	Under Order 200173635, variable spring support 1E12-H0675 was scheduled for a VT-3 examination. Previous history and the ISI database did not indicate that scaffolding was necessary for this support as it's pipe attachment is located just above the Drywell 630 platform. However, it was found that the majority of the support assembly is below the 630 platform grating and could not be examined without scaffolding. As such, variable spring support 1E12-H0661, which was not scheduled and which did not require any scaffolding, was substituted in its place. Document Change Request Notification 600379351 was generated for revision of the ISEP to reflect the substitution.

10.0 EXAMINATION SUMMARY RESULTS

RF011 was the fifth refueling outage of Perry's second 10-Year Inservice Inspection Interval and it was the first of two outages in the third inspection period. With the completion of the Cycle 11 and RF011 examinations, approximately 50% of the examinations scheduled for the third period are complete. The remaining third period examinations will be completed by the end of RF012.

Cycle 11 and RF011 examinations resulted in a complete and acceptable program in that all indications were evaluated for acceptance in accordance with ASME Section XI, IWA-3000, all corrective measures or evaluations were completed.

Appendix "A" is a computer-generated summary of the Cycle 11 and RF011 examination results. Component identifications (Mark Nos.) and order of appearance may differ slightly from that listed in Revision 11 of PNPP's Inservice Examination Program. The differences are to accommodate the database software program. Original examination data reports are on file and available for review at the site.

11.0 NIS-2/NR-1

Repairs, replacements and modifications are carried out in accordance with PNPP's Nuclear Repair & Repair (non-nuclear) Manual, which meets regulatory requirements and quality standards. Compliance of the work is delineated on NIS-2/NR-1 Forms.

The following is a listing of NIS-2/NR-1 forms applicable to this report (Class 1 and 2 only) which have been completed since PNPP's last summary report:

NR-1/NIS-2 FORMS

SYS/NO.	MPL NO.	DESCRIPTION/COMMENTS	CLASS	PAGE
Reactor Pressure Vessel (1B13) Cycle 11 & RF011 Reports:				
1B13-052	1B13-D0008	Replaced 14 CRDMs and 8 capscrews each at locations 22/27, 46/27, 50/19, 42/15, 34/47, 42/51, 50/23, 46/15, 42/27, 46/43, 54/23, 42/39, 10/35, 50/31; and also replaced 8 capscrews each on existing CRDMs located at 42/31, 50/27, 14/19, and 26/35.	1	49
Main Steam (1B21) System Cycle 11 & RF011 Reports:				
1B21-366	1B21-G7091	Replaced E-Systems hydraulic snubber with like snubber	1	80
1B21-367	1B21-F0032A 1B21-F0032B	Removed and replaced 1-3/4" inch welded test connections for inspection	1	81
1B21-368	1H22-H2744	Replaced Lisega hydraulic snubber with like snubber	1	84
1B21-369	1B21-H0445	Replaced Lisega hydraulic snubber with like snubber	1	85
1B21-370	1B21-H0449	Replaced Lisega hydraulic snubber with like snubber	1	86
1B21-371	1B21-H0450	Replaced Lisega hydraulic snubber with like snubber	1	87
1B21-372	1B21-H0471	Replaced Lisega hydraulic snubber with like snubber	1	88
1B21-373	1B21-F041D	Replaced SRV with like SRV	1	89
1B21-374	1B21-F047H	Replaced SRV with like SRV	1	91
1B21-375	1B21-F047F	Replaced SRV with like SRV	1	93
1B21-376	1B21-F047B	Replaced SRV with like SRV	1	95
1B21-377	1B21-F047D	Replaced SRV with like SRV	1	97
1B21-378	1B21-F051B	Replaced SRV with like SRV	1	99
1B21-379	1B21-F041F	Replaced SRV with like SRV	1	101
1B21-380	1B21-F051D	Replaced SRV with like SRV	1	103
1B21-381	1B21-F041B	Replaced SRV with like SRV	1	105
1B21-382	1B21-F041K	Replaced SRV with like SRV	1	107
1B21-383	1B21-F028C	Replaced MSIV poppet with new poppet	1	109
Reactor Recirculation (1B33) System Cycle 11 & RF011 Reports:				
1B33-127	1B33-G7064B	Replaced E-Systems hydraulic snubber with like snubber	1	112
1B33-128	1B33-G7066B	Replaced E-Systems hydraulic snubber with like snubber	1	114
1B33-129	1B33-G7065B	Replaced E-Systems hydraulic snubber with like snubber	1	116

NR-1/NIS-2 FORMS CONTINUED

SYS/NO.	MPL NO.	DESCRIPTION/COMMENTS	CLASS	PAGE
Standby Liquid Control (0&1C41) System Cycle 11 & RF011 Reports:				
1C41-036	1C41-D0003	Replaced heater flange with like flange	2	118
1C41-037	1C41-F0004B	Replaced primer/trigger assembly of explosive SQUIB valve	1	119
1C41-038	1C41-F0029B	Replaced 1x2" relief valve with like valve	2	123
Residual Heat Removal (1E12) System Cycle 11 & RF011 Reports:				
1E12-293	1E12-C0003	Replaced waterleg pump rotating element of the pump with like element (casing unchanged)	2	125
1E12-294	1E12-H0066	Installed a new load stud	2	127
1E12-295	1E12-H5002	Replaced PSA mechanical snubber with like snubber	2	128
1E12-296	1H22-H0209	Replaced PSA mechanical snubber with like snubber	2	129
1E12-297	1E12-F063C	Replaced 8" check valve with like valve	2	131
1E12-298	1E12-F086	Replaced 6" check valve with like valve	2	133
1E12-299	1E12-F063A	Replaced 8" check valve with like valve	2	135
1E12-300	1E12-F063B	Replaced 8" check valve with like valve	2	137
1E12-301	1E12-F041A	Installed new disc in 12" testable check valve	2	139
1E12-302	1E12	Replaced 6" piping and tee downstream of 1E12-F018B due to FAC	1	141
1E12-303	1E12-F055B	Replaced 4x6 relief valve with like valve	2	142
Low Pressure Core Spray (1E21) System Cycle 11 & RF011 Reports:				
1E21-039	1E21-C0002	Replaced waterleg pump rotating element of the pump with like element (casing unchanged)	2	144
High Pressure Core Spray (1E22) System Cycle 11 & RF011 Reports:				
1E22-062	1E22-C0003	Replaced stuffing box and seal gland of Waterleg pump	2	146
1E22-063	1E22-C0003	Replaced waterleg pump with like pump	2	148
1E22-068	1E22-C0003	Replaced waterleg pump rotating element of the pump with like element (casing unchanged)	2	150
1E22-069	1E22-F0541B	Replaced 2-way air start valve with like valve	2	152
1E22-070	1E22-F0541A	Replaced 2-way air start valve with like valve	2	153
1E22-072	1E22-F0034	Replaced 2" globe valve with like valve	2	154
Reactor Core Isolation Cooling (1E51) System Cycle 11 & RF011 Reports:				
1E51-139	1E51-F0011	Replaced 6" Duo check valve with like valve	2	156
1E51-140	1E51-D0002	Replaced rupture disc with like disc	2	158
1E51-141	1E51-H0073	Replaced Lisega hydraulic snubber with like snubber	1	159
1E51-142	1E51-H0074	Replaced Lisega hydraulic snubber with like snubber	1	160
1E51-143	1E51-H2078	Replaced Lisega hydraulic snubber with like snubber	2	161
1E51-144	1E51-F066	Replaced 6" check valve disc retainer assembly	1	162

NR-1/NIS-2 FORMS CONTINUED

SYS/NO.	MPL NO.	DESCRIPTION/COMMENTS	CLASS	PAGE
Reactor Core Isolation Cooling (1E51) System Cycle 11 & RFO11 Reports Cont.:				
1E51-145	1E51-D0001	Replaced rupture disc with like disc	2	164
1E51-146	1E51-C0003	Replaced waterleg pump with like pump	2	165
Combustible Gas Control (1M51) System Cycle 11 & RFO11 Reports:				
1M51-028	1M51-F0010B	Replaced nuts on globe valve bonnet	2	166
Main, Reheat, Extraction, and Misc. Drains (1N22) System Cycle 11 & RFO11 Reports:				
1N22-065	1B21-F0016	Replaced gate in 3" globe valve	1	167
1N22-066	1B21-F0019	Replaced gate in 3" globe valve	1	169
Feedwater (1N27) System Cycle 11 & RFO11 Reports:				
1N27-047	1N27-F0559B	Removed and reinstalled 1-3/4" test connection from 20" check valve	1	171
1N27-048	1N27-F0559A	Removed and reinstalled 1-3/4" test connection from 20" check valve	1	173
Condensate Transfer and Storage (1P11) System Cycle 11 and RFO11 Reports:				
1P11-009	1P11-F0060	Replaced 12" globe valve with like valve	2	174
1P11-010	1P11-F0545	Installed new wafer disc in 12" check valve	2	176
Nuclear Closed Cooling (1P43) System Cycle 11 & RFO11 Reports:				
1P43-018	1P43-F0355	Rebuilt 10" butterfly valve using new cap screws, studs, and shaft/disc assembly	2	177
Fire Protection (1P54) System Cycle 11 & RFO11 Reports:				
1P54-009	1P54-F1098	Replaced check valve with like valve	2	179

Copies of the NIS-2/NR-1 forms are contained in Appendix "B" and the corresponding starting page numbers are provided in the above table.

APPENDIX A

"CYCLE 11 & RFO11 EXAMINATION RESULTS SUMMARY"

INSERVICE INSPECTION SUMMARY REPORT

FOR

PERRY NUCLEAR POWER PLANT

(PNPP)

UNIT 1

First Energy Nuclear Operating Company

Perry Nuclear Power Plant

ISI Summary Report No. P0059-0011
Second Interval, Third Period, First Outage
(RFO11)
Cycle 11 and RFO11 Inservice Examinations

Prepared by: _____ Date: 7/13/2007
ISI Engineer

Reviewed by: _____ ANII Date: 7/18/2007
Authorized Nuclear Inservice Inspector

ID of Component Examined Description of Component Size - Sched. - ISI Dwg. No.	ASME Category ASME Item No.	Exam Method	Exam Report No.	Status	Remarks
1B13-0001 RPV VENT & HEAD SPRAY TEE, FLANGE TO TEE 6" 305-631-108	R-A R2.11	UT	0944-07-E193	GEO	Root geometry and counterbore seen 360° intermittently.
1B13-0001 RPV VENT & HEAD SPRAY TEE, FLANGE TO TEE 6" 305-631-108	R-A R2.11	UT	0944-07-E192	NRI	Zero degree exam performed as weld was being examined for the first time.
1B13-22/03-FW CRD HOUSING TO FLANGE WELD 6" N/A 305-006-110	B-O B14.10	PT	0941-07A-007	SAT	85% coverage (IR-009). No indications.
1B13-22/59-HW CRD HOUSING TO HOUSING WELD 6" N/A 305-006-110	B-O B14.10	PT	0941-07A-005	SAT	None.
1B13-38/59-HW CRD HOUSING TO HOUSING WELD 6" N/A 305-006-110	B-O B14.10	PT	0941-07A-004	SAT	None.
1B13-54/15-FW CRD HOUSING TO FLANGE WELD 6" N/A 305-006-110	B-O B14.10	PT	0941-07A-006	SAT	85% coverage (IR-009). No indications.
1B13-AG TOP HEAD TO TOP HEAD FLANGE N/A N/A 305-006-103	B-A B1.40	MT	0942-07A-015	SAT	None.
1B13-AG TOP HEAD TO TOP HEAD FLANGE N/A N/A 305-006-103	B-A B1.40	UT	1Q800-07-002	NRI	83.7% coverage and no indications (IR-001).
1B13-DG BOTTOM CENTER PLATE TO SIDE PLATE, 270 AZ SIDE N/A N/A 305-006-104	B-A B1.22	UT	1Q800-07-005	SAT	29% coverage and no relevant indications (IR-001).
1B13-DH BOTTOM CENTER PLATE TO SIDE PLATE, 90 AZ SIDE N/A N/A 305-006-104	B-A B1.22	UT	1Q800-07-004	SAT	29% coverage and no relevant indications (IR-001).

ID of Component Examined Description of Component Size - Sched. - ISI Dwg. No.	ASME Category ASME Item No.	Exam Method	Exam Report No.	Status	Remarks
1B13-DM TOP HEAD MERIDIONAL WELD @ 195 AZ N/A N/A 305-006-103	B-A B1.22	UT	1Q800-07-001	SAT	None.
1B13-DR TOP HEAD MERIDIONAL WELD @ 15 AZ N/A N/A 305-006-103	B-A B1.22	UT	1Q800-07-003	SAT	None.
1B13-F4-N RPV CLOSURE HEAD NUT 5" N/A 305-006-112	B-G-1 B6.10	VT-1	1042-07-048	SAT	None.
1B13-F4-S RPV CLOSURE HEAD STUD 5" N/A 305-006-112	B-G-1 B6.20	UT	0944-07-E019	NRI	Zone 1 Exam.
1B13-F4-S RPV CLOSURE HEAD STUD 5" N/A 305-006-112	B-G-1 B6.20	UT	0944-07-E020	NRI	Zone 2 Exam.
1B13-F4-T RPV SHELL, THREADS IN FLANGE AREA 5" N/A 305-006-112	B-G-1 B6.40	UT	0944-07-E067	NRI	Achieved approximately 92% coverage.
1B13-F4-W RPV CLOSURE HEAD WASHER 5" N/A 305-006-112	B-G-1 B6.50	VT-1	1042-07-038	SAT	None.
1B13-F5-N RPV CLOSURE HEAD NUT 5" N/A 305-006-112	B-G-1 B6.10	VT-1	1042-07-049	SAT	None.
1B13-F5-S RPV CLOSURE HEAD STUD 5" N/A 305-006-112	B-G-1 B6.20	UT	0944-07-E021	NRI	Zone 1 Exam.
1B13-F5-S RPV CLOSURE HEAD STUD 5" N/A 305-006-112	B-G-1 B6.20	UT	0944-07-E022	NRI	Zone 2 Exam.

ID of Component Examined Description of Component Size - Sched. - ISI Dwg. No.	ASME Category ASME Item No.	Exam Method	Exam Report No.	Status	Remarks
1B13-F5-T RPV SHELL, THREADS IN FLANGE AREA 5" N/A 305-006-112	B-G-1 B6.40	UT	0944-07-E068	NRI	Achieved approximately 92% coverage.
1B13-F5-W RPV CLOSURE HEAD WASHER 5" N/A 305-006-112	B-G-1 B6.50	VT-1	1042-07-039	SAT	None.
1B13-F6-N RPV CLOSURE HEAD NUT 5" N/A 305-006-112	B-G-1 B6.10	VT-1	1042-07-050	SAT	None.
1B13-F6-S RPV CLOSURE HEAD STUD 5" N/A 305-006-112	B-G-1 B6.20	UT	0944-07-E023	NRI	Zone 1 Exam.
1B13-F6-S RPV CLOSURE HEAD STUD 5" N/A 305-006-112	B-G-1 B6.20	UT	0944-07-E024	NRI	Zone 2 Exam.
1B13-F6-T RPV SHELL, THREADS IN FLANGE AREA 5" N/A 305-006-112	B-G-1 B6.40	UT	0944-07-E069	NRI	Achieved approximately 92% coverage.
1B13-F6-W RPV CLOSURE HEAD WASHER 5" N/A 305-006-112	B-G-1 B6.50	VT-1	1042-07-040	SAT	None.
1B13-F7-N RPV CLOSURE HEAD NUT 5" N/A 305-006-112	B-G-1 B6.10	VT-1	1042-07-051	SAT	None.
1B13-F7-S RPV CLOSURE HEAD STUD 5" N/A 305-006-112	B-G-1 B6.20	UT	0944-07-E026	NRI	Zone 2 Exam.
1B13-F7-S RPV CLOSURE HEAD STUD 5" N/A 305-006-112	B-G-1 B6.20	UT	0944-07-E025	NRI	Zone 1 Exam.

ID of Component Examined Description of Component Size - Sched. - ISI Dwg. No.	ASME Category ASME Item No.	Exam Method	Exam Report No.	Status	Remarks
1B13-F7-T RPV SHELL, THREADS IN FLANGE AREA 5" N/A 305-006-112	B-G-1 B6.40	UT	0944-07-E070	NRI	Achieved approximately 92% coverage.
1B13-F7-W RPV CLOSURE HEAD WASHER 5" N/A 305-006-112	B-G-1 B6.50	VT-1	1042-07-041	SAT	None.
1B13-F8-N RPV CLOSURE HEAD NUT 5" N/A 305-006-112	B-G-1 B6.10	VT-1	1042-07-052	SAT	None.
1B13-F8-S RPV CLOSURE HEAD STUD 5" N/A 305-006-112	B-G-1 B6.20	UT	0944-07-E027	NRI	Zone 1 Exam.
1B13-F8-S RPV CLOSURE HEAD STUD 5" N/A 305-006-112	B-G-1 B6.20	UT	0944-07-E028	NRI	Zone 2 Exam.
1B13-F8-T RPV SHELL, THREADS IN FLANGE AREA 5" N/A 305-006-112	B-G-1 B6.40	UT	0944-07-E071	NRI	Achieved approximately 92% coverage.
1B13-F8-W RPV CLOSURE HEAD WASHER 5" N/A 305-006-112	B-G-1 B6.50	VT-1	1042-07-042	SAT	None.
1B13-F9-N RPV CLOSURE HEAD NUT 5" N/A 305-006-112	B-G-1 B6.10	VT-1	1042-07-053	SAT	None.
1B13-F9-S RPV CLOSURE HEAD STUD 5" N/A 305-006-112	B-G-1 B6.20	UT	0944-07-E030	NRI	Zone 2 Exam.
1B13-F9-S RPV CLOSURE HEAD STUD 5" N/A 305-006-112	B-G-1 B6.20	UT	0944-07-E029	NRI	Zone 1 Exam.

ID of Component Examined Description of Component Size - Sched. - ISI Dwg. No.	ASME Category ASME Item No.	Exam Method	Exam Report No.	Status	Remarks
1B13-F9-T RPV SHELL, THREADS IN FLANGE AREA 5" N/A 305-006-112	B-G-1 B6.40	UT	0944-07-E072	NRI	Achieved approximately 92% coverage.
1B13-F9-W RPV CLOSURE HEAD WASHER 5" N/A 305-006-112	B-G-1 B6.50	VT-1	1042-07-043	SAT	None.
1B13-G1-N RPV CLOSURE HEAD NUT 5" N/A 305-006-112	B-G-1 B6.10	VT-1	1042-07-072	SAT	None.
1B13-G1-S RPV CLOSURE HEAD STUD 5" N/A 305-006-112	B-G-1 B6.20	UT	0944-07-E031	NRI	Zone 1 Exam.
1B13-G1-S RPV CLOSURE HEAD STUD 5" N/A 305-006-112	B-G-1 B6.20	UT	0944-07-E032	NRI	Zone 2 Exam.
1B13-G1-T RPV SHELL, THREADS IN FLANGE AREA 5" N/A 305-006-112	B-G-1 B6.40	UT	0944-07-E073	NRI	Achieved approximately 92% coverage.
1B13-G1-W RPV CLOSURE HEAD WASHER 5" N/A 305-006-112	B-G-1 B6.50	VT-1	1042-07-058	SAT	None.
1B13-G2-N RPV CLOSURE HEAD NUT 5" N/A 305-006-112	B-G-1 B6.10	VT-1	1042-07-073	SAT	None.
1B13-G2-S RPV CLOSURE HEAD STUD 5" N/A 305-006-112	B-G-1 B6.20	UT	0944-07-E034	NRI	Zone 2 Exam.
1B13-G2-S RPV CLOSURE HEAD STUD 5" N/A 305-006-112	B-G-1 B6.20	UT	0944-07-E033	NRI	Zone 1 Exam.

ID of Component Examined Description of Component Size - Sched. - ISI Dwg. No.	ASME Category ASME Item No.	Exam Method	Exam Report No.	Status	Remarks
1B13-G2-T RPV SHELL, THREADS IN FLANGE AREA 5" N/A 305-006-112	B-G-1 B6.40	UT	0944-07-E074	NRI	Achieved approximately 92% coverage.
1B13-G2-W RPV CLOSURE HEAD WASHER 5" N/A 305-006-112	B-G-1 B6.50	VT-1	1042-07-059	SAT	None.
1B13-G3-N RPV CLOSURE HEAD NUT 5" N/A 305-006-112	B-G-1 B6.10	VT-1	1042-07-074	SAT	None.
1B13-G3-S RPV CLOSURE HEAD STUD 5" N/A 305-006-112	B-G-1 B6.20	UT	0944-07-E035	NRI	Zone 1 Exam.
1B13-G3-S RPV CLOSURE HEAD STUD 5" N/A 305-006-112	B-G-1 B6.20	UT	0944-07-E036	NRI	Zone 2 Exam.
1B13-G3-T RPV SHELL, THREADS IN FLANGE AREA 5" N/A 305-006-112	B-G-1 B6.40	UT	0944-07-E075	NRI	Achieved approximately 92% coverage.
1B13-G3-W RPV CLOSURE HEAD WASHER 5" N/A 305-006-112	B-G-1 B6.50	VT-1	1042-07-060	SAT	None.
1B13-G4-N RPV CLOSURE HEAD NUT 5" N/A 305-006-112	B-G-1 B6.10	VT-1	1042-07-075	SAT	None.
1B13-G4-S RPV CLOSURE HEAD STUD 5" N/A 305-006-112	B-G-1 B6.20	UT	0944-07-E037	NRI	Zone 1 Exam.
1B13-G4-S RPV CLOSURE HEAD STUD 5" N/A 305-006-112	B-G-1 B6.20	UT	0944-07-E038	NRI	Zone 2 Exam.

ID of Component Examined Description of Component Size - Sched. - ISI Dwg. No.	ASME Category ASME Item No.	Exam Method	Exam Report No.	Status	Remarks
1B13-G4-T RPV SHELL, THREADS IN FLANGE AREA 5" N/A 305-006-112	B-G-1 B6.40	UT	0944-07-E076	NRI	Achieved approximately 92% coverage.
1B13-G4-W RPV CLOSURE HEAD WASHER 5" N/A 305-006-112	B-G-1 B6.50	VT-1	1042-07-061	Sat	None.
1B13-G5-N RPV CLOSURE HEAD NUT 5" N/A 305-006-112	B-G-1 B6.10	VT-1	1042-07-076	Sat	None.
1B13-G5-S RPV CLOSURE HEAD STUD 5" N/A 305-006-112	B-G-1 B6.20	UT	0944-07-E040	NRI	Zone 2 Exam.
1B13-G5-S RPV CLOSURE HEAD STUD 5" N/A 305-006-112	B-G-1 B6.20	UT	0944-07-E039	NRI	Zone 1 Exam.
1B13-G5-T RPV SHELL, THREADS IN FLANGE AREA 5" N/A 305-006-112	B-G-1 B6.40	UT	0944-07-E077	NRI	Achieved approximately 92% coverage.
1B13-G5-W RPV CLOSURE HEAD WASHER 5" N/A 305-006-112	B-G-1 B6.50	VT-1	1042-07-062	SAT	None.
1B13-G6-N RPV CLOSURE HEAD NUT 5" N/A 305-006-112	B-G-1 B6.10	VT-1	1042-07-077	SAT	None.
1B13-G6-S RPV CLOSURE HEAD STUD 5" N/A 305-006-112	B-G-1 B6.20	UT	0944-07-E041	NRI	Zone 1 Exam.
1B13-G6-S RPV CLOSURE HEAD STUD 5" N/A 305-006-112	B-G-1 B6.20	UT	0944-07-E042	NRI	Zone 2 Exam.

ID of Component Examined Description of Component Size - Sched. - ISI Dwg. No.	ASME Category ASME Item No.	Exam Method	Exam Report No.	Status	Remarks
1B13-G6-T RPV SHELL, THREADS IN FLANGE AREA 5" N/A 305-006-112	B-G-1 B6.40	UT	0944-07-E078	NRI	Achieved approximately 92% coverage.
1B13-G6-W RPV CLOSURE HEAD WASHER 5" N/A 305-006-112	B-G-1 B6.50	VT-1	1042-07-063	SAT	None.
1B13-G7-N RPV CLOSURE HEAD NUT 5" N/A 305-006-112	B-G-1 B6.10	VT-1	1042-07-078	SAT	None.
1B13-G7-S RPV CLOSURE HEAD STUD 5" N/A 305-006-112	B-G-1 B6.20	UT	0944-07-E044	NRI	Zone 2 Exam.
1B13-G7-S RPV CLOSURE HEAD STUD 5" N/A 305-006-112	B-G-1 B6.20	UT	0944-07-E043	NRI	Zone 1 Exam.
1B13-G7-T RPV SHELL, THREADS IN FLANGE AREA 5" N/A 305-006-112	B-G-1 B6.40	UT	0944-07-E079	NRI	Achieved approximately 92% coverage.
1B13-G7-W RPV CLOSURE HEAD WASHER 5" N/A 305-006-112	B-G-1 B6.50	VT-1	1042-07-064	SAT	None.
1B13-G8-N RPV CLOSURE HEAD NUT 5" N/A 305-006-112	B-G-1 B6.10	VT-1	1042-07-079	SAT	None.
1B13-G8-S RPV CLOSURE HEAD STUD 5" N/A 305-006-112	B-G-1 B6.20	UT	0944-07-E045	NRI	Zone 1 Exam.
1B13-G8-S RPV CLOSURE HEAD STUD 5" N/A 305-006-112	B-G-1 B6.20	UT	0944-07-E046	NRI	Zone 2 Exam.

ID of Component Examined Description of Component Size - Sched. - ISI Dwg. No.	ASME Category ASME Item No.	Exam Method	Exam Report No.	Status	Remarks
1B13-G8-T RPV SHELL, THREADS IN FLANGE AREA 5" N/A 305-006-112	B-G-1 B6.40	UT	0944-07-E080	NRI	Achieved approximately 92% coverage.
1B13-G8-W RPV CLOSURE HEAD WASHER 5" N/A 305-006-112	B-G-1 B6.50	VT-1	1042-07-065	SAT	None.
1B13-G9-N RPV CLOSURE HEAD NUT 5" N/A 305-006-112	B-G-1 B6.10	VT-1	1042-07-080	SAT	None.
1B13-G9-S RPV CLOSURE HEAD STUD 5" N/A 305-006-112	B-G-1 B6.20	UT	0944-07-E047	NRI	Zone 1 Exam.
1B13-G9-S RPV CLOSURE HEAD STUD 5" N/A 305-006-112	B-G-1 B6.20	UT	0944-07-E048	NRI	Zone 2 Exam.
1B13-G9-T RPV SHELL, THREADS IN FLANGE AREA 5" N/A 305-006-112	B-G-1 B6.40	UT	0944-07-E081	NRI	Achieved approximately 92% coverage.
1B13-G9-W RPV CLOSURE HEAD WASHER 5" N/A 305-006-112	B-G-1 B6.50	VT-1	1042-07-066	Sat	None.
1B13-H1-N RPV CLOSURE HEAD NUT 5" N/A 305-006-112	B-G-1 B6.10	VT-1	1042-07-081	Sat	None.
1B13-H1-S RPV CLOSURE HEAD STUD 5" N/A 305-006-112	B-G-1 B6.20	UT	0944-07-E050	NRI	Zone 2 Exam.
1B13-H1-S RPV CLOSURE HEAD STUD 5" N/A 305-006-112	B-G-1 B6.20	UT	0944-07-E049	NRI	Zone 1 Exam.

ID of Component Examined Description of Component Size - Sched. - ISI Dwg. No.	ASME Category ASME Item No.	Exam Method	Exam Report No.	Status	Remarks
1B13-H1-T RPV SHELL, THREADS IN FLANGE AREA 5" N/A 305-006-112	B-G-1 B6.40	UT	0944-07-E082	NRI	Achieved approximately 92% coverage.
1B13-H1-W RPV CLOSURE HEAD WASHER 5" N/A 305-006-112	B-G-1 B6.50	VT-1	1042-07-067	Sat	None.
1B13-H2-N RPV CLOSURE HEAD NUT 5" N/A 305-006-112	B-G-1 B6.10	VT-1	1042-07-082	Sat	None.
1B13-H2-S RPV CLOSURE HEAD STUD 5" N/A 305-006-112	B-G-1 B6.20	UT	0944-07-E052	NRI	Zone 2 Exam.
1B13-H2-S RPV CLOSURE HEAD STUD 5" N/A 305-006-112	B-G-1 B6.20	UT	0944-07-E051	NRI	Zone 1 Exam.
1B13-H2-T RPV SHELL, THREADS IN FLANGE AREA 5" N/A 305-006-112	B-G-1 B6.40	UT	0944-07-E083	NRI	Achieved approximately 92% coverage.
1B13-H2-W RPV CLOSURE HEAD WASHER 5" N/A 305-006-112	B-G-1 B6.50	VT-1	1042-07-068	SAT	None.
1B13-H3-N RPV CLOSURE HEAD NUT 5" N/A 305-006-112	B-G-1 B6.10	VT-1	1042-07-083	SAT	None.
1B13-H3-S RPV CLOSURE HEAD STUD 5" N/A 305-006-112	B-G-1 B6.20	UT	0944-07-E054	NRI	Zone 2 Exam.
1B13-H3-S RPV CLOSURE HEAD STUD 5" N/A 305-006-112	B-G-1 B6.20	UT	0944-07-E053	NRI	Zone 1 Exam.

ID of Component Examined Description of Component Size - Sched. - ISI Dwg. No.	ASME Category ASME Item No.	Exam Method	Exam Report No.	Status	Remarks
1B13-H3-T RPV SHELL, THREADS IN FLANGE AREA 5" N/A 305-006-112	B-G-1 B6.40	UT	0944-07-E084	NRI	Achieved approximately 92% coverage.
1B13-H3-W RPV CLOSURE HEAD WASHER 5" N/A 305-006-112	B-G-1 B6.50	VT-1	1042-07-069	SAT	None.
1B13-H4-N RPV CLOSURE HEAD NUT 5" N/A 305-006-112	B-G-1 B6.10	VT-1	1042-07-084	SAT	None.
1B13-H4-S RPV CLOSURE HEAD STUD 5" N/A 305-006-112	B-G-1 B6.20	UT	0944-07-E056	NRI	Zone 2 Exam.
1B13-H4-S RPV CLOSURE HEAD STUD 5" N/A 305-006-112	B-G-1 B6.20	UT	0944-07-E055	NRI	Zone 1 Exam.
1B13-H4-T RPV SHELL, THREADS IN FLANGE AREA 5" N/A 305-006-112	B-G-1 B6.40	UT	0944-07-E085	NRI	Achieved approximately 92% coverage.
1B13-H4-W RPV CLOSURE HEAD WASHER 5" N/A 305-006-112	B-G-1 B6.50	VT-1	1042-07-070	SAT	None.
1B13-H5-N RPV CLOSURE HEAD NUT 5" N/A 305-006-112	B-G-1 B6.10	VT-1	1042-07-085	SAT	None.
1B13-H5-S RPV CLOSURE HEAD STUD 5" N/A 305-006-112	B-G-1 B6.20	UT	0944-07-E057	NRI	Zone 1 Exam.
1B13-H5-S RPV CLOSURE HEAD STUD 5" N/A 305-006-112	B-G-1 B6.20	UT	0944-07-E058	NRI	Zone 2 Exam.

ID of Component Examined Description of Component Size - Sched. - ISI Dwg. No.	ASME Category ASME Item No.	Exam Method	Exam Report No.	Status	Remarks
1B13-H5-T RPV SHELL, THREADS IN FLANGE AREA 5" N/A 305-006-112	B-G-1 B6.40	UT	0944-07-E086	NRI	Achieved approximately 92% coverage.
1B13-H5-W RPV CLOSURE HEAD WASHER 5" N/A 305-006-112	B-G-1 B6.50	VT-1	1042-07-071	SAT	None.
1B13-H6-N RPV CLOSURE HEAD NUT 5" N/A 305-006-112	B-G-1 B6.10	VT-1	1042-07-054	SAT	None.
1B13-H6-S RPV CLOSURE HEAD STUD 5" N/A 305-006-112	B-G-1 B6.20	UT	0944-07-E059	NRI	Zone 1 Exam.
1B13-H6-S RPV CLOSURE HEAD STUD 5" N/A 305-006-112	B-G-1 B6.20	UT	0944-07-E060	NRI	Zone 2 Exam.
1B13-H6-T RPV SHELL, THREADS IN FLANGE AREA 5" N/A 305-006-112	B-G-1 B6.40	UT	0944-07-E087	NRI	Achieved approximately 92% coverage.
1B13-H6-W RPV CLOSURE HEAD WASHER 5" N/A 305-006-112	B-G-1 B6.50	VT-1	1042-07-044	SAT	None.
1B13-H7-N RPV CLOSURE HEAD NUT 5" N/A 305-006-112	B-G-1 B6.10	VT-1	1042-07-055	SAT	None.
1B13-H7-S RPV CLOSURE HEAD STUD 5" N/A 305-006-112	B-G-1 B6.20	UT	0944-07-E061	NRI	Zone 1 Exam.
1B13-H7-S RPV CLOSURE HEAD STUD 5" N/A 305-006-112	B-G-1 B6.20	UT	0944-07-E062	NRI	Zone 2 Exam.

ID of Component Examined Description of Component Size - Sched. - ISI Dwg. No.	ASME Category ASME Item No.	Exam Method	Exam Report No.	Status	Remarks
1B13-H7-T RPV SHELL, THREADS IN FLANGE AREA 5" N/A 305-006-112	B-G-1 B6.40	UT	0944-07-E088	NRI	Achieved approximately 92% coverage.
1B13-H7-W RPV CLOSURE HEAD WASHER 5" N/A 305-006-112	B-G-1 B6.50	VT-1	1042-07-045	SAT	None.
1B13-H8-N RPV CLOSURE HEAD NUT 5" N/A 305-006-112	B-G-1 B6.10	VT-1	1042-07-056	SAT	None.
1B13-H8-S RPV CLOSURE HEAD STUD 5" N/A 305-006-112	B-G-1 B6.20	UT	0944-07-E063	NRI	Zone 1 Exam.
1B13-H8-S RPV CLOSURE HEAD STUD 5" N/A 305-006-112	B-G-1 B6.20	UT	0944-07-E064	NRI	Zone 2 Exam.
1B13-H8-T RPV SHELL, THREADS IN FLANGE AREA 5" N/A 305-006-112	B-G-1 B6.40	UT	0944-07-E089	NRI	Achieved approximately 92% coverage.
1B13-H8-W RPV CLOSURE HEAD WASHERS 5" N/A 305-006-112	B-G-1 B6.50	VT-1	1042-07-046	SAT	None.
1B13-H9-N RPV CLOSURE HEAD NUT 5" N/A 305-006-112	B-G-1 B6.10	VT-1	1042-07-057	SAT	None.
1B13-H9-S RPV CLOSURE HEAD STUD 5" N/A 305-006-112	B-G-1 B6.20	UT	0944-07-E065	NRI	Zone 1 Exam.
1B13-H9-S RPV CLOSURE HEAD STUD 5" N/A 305-006-112	B-G-1 B6.20	UT	0944-07-E066	NRI	Zone 2 Exam.

ID of Component Examined Description of Component Size - Sched. - ISI Dwg. No.	ASME Category ASME Item No.	Exam Method	Exam Report No.	Status	Remarks
1B13-H9-T RPV SHELL, THREADS IN FLANGE AREA 5" N/A 305-006-112	B-G-1 B6.40	UT	0944-07-E090	NRI	Achieved approximately 92% coverage.
1B13-H9-W RPV CLOSURE HEAD WASHERS 5" N/A 305-006-112	B-G-1 B6.50	VT-1	1042-07-047	SAT	None.
1B13-N1A-IR RECIRC OUTLET NOZZLE N1A INNER RADIUS 22" N/A 305-006-107	B-D B3.100	VT-1	1Q800-07-027	NRI	VT-1 with 1 mil wire resolution. 100% coverage and no indications.
1B13-N1A-KA RECIRC OUTLET NOZZLE N1A TO VESSEL 22" N/A 305-006-107	B-D B3.90	UT	1Q800-07-007	NRI	96.4% coverage and no indications.
1B13-N1A-KB RECIRC OUTLET NOZZLE N1A TO SAFE-END 22" 1.51" 305-006-107	R-A R3.ND	A-UT	1Q800-07-025	GEO	None.
1B13-N2A-KB RECIRC. INLET NOZZLE N2A TO SAFE-END 12" 1.125" 305-006-107	R-A R2.14	A-UT	1Q800-07-015	GEO	None.
1B13-N2B-IR RECIRC INLET NOZZLE N2B INNER RADIUS 12" N/A 305-006-107	B-D B3.100	A-UT	1Q800-07-009	NRI	None.
1B13-N2B-KA RECIRC INLET NOZZLE N2B TO VESSEL 12" N/A 305-006-107	B-D B3.90	A-UT	1Q800-07-014	IND	94.6% coverage. One acceptable subsurface indication.
1B13-N2B-KB RECIRC. INLET NOZZLE N2B TO SAFE-END 12" 1.125" 305-006-107	R-A R2.14	A-UT	1Q800-07-016	GEO	None.
1B13-N2C-KB RECIRC INLET NOZZLE N2C TO SAFE-END 12" 1.125" 305-006-107	R-A R2.14	A-UT	1Q800-07-017	GEO	None.

ID of Component Examined Description of Component Size - Sched. - ISI Dwg. No.	ASME Category ASME Item No.	Exam Method	Exam Report No.	Status	Remarks
1B13-N2D-KB RECIRC. INLET NOZZLE N2D TO SAFE-END 12" 1.125" 305-006-107	R-A R2.14	A-UT	1Q800-07-018	GEO	None.
1B13-N2E-IR RECIRC INLET NOZZLE N2E INNER RADIUS 12" N/A 305-006-107	B-D B3.100	A-UT	1Q800-07-010	NRI	None.
1B13-N2E-KA RECIRC INLET NOZZLE N2E TO VESSEL 12" N/A 305-006-107	B-D B3.90	A-UT	1Q800-07-011	NRI	94.6% coverage. No relevant indications.
1B13-N2E-KB RECIRC. INLET NOZZLE N2E TO SAFE-END 12" 1.125" 305-006-107	R-A R2.14	A-UT	1Q800-07-019	GEO	None.
1B13-N2F-KB RECIRC. INLET NOZZLE N2F TO SAFE-END 12" 1.125" 305-006-107	R-A R2.14	A-UT	1Q800-07-020	GEO	None.
1B13-N2G-KB RECIRC. INLET NOZZLE N2G TO SAFE-END 12" 1.125" 305-006-107	R-A R2.14	A-UT	1Q800-07-021	GEO	None.
1B13-N2H-KB RECIRC. INLET NOZZLE N2H TO SAFE-END 12" 1.125" 305-006-107	R-A R2.14	A-UT	1Q800-07-022	GEO	None.
1B13-N2J-KB RECIRC INLET NOZZLE N2J TO SAFE-END 12" 1.125" 305-006-107	R-A R2.14	A-UT	1Q800-07-023	GEO	None.
1B13-N2K-IR RECIRC INLET NOZZLE N2K INNER RADIUS 12" N/A 305-006-107	B-D B3.100	A-UT	1Q800-07-012	NRI	None.
1B13-N2K-KA RECIRC INLET NOZZLE N2K TO VESSEL 12" N/A 305-006-107	B-D B3.90	A-UT	1Q800-07-013	NRI	94.6% coverage. No relevant indications.

ID of Component Examined Description of Component Size - Sched. - ISI Dwg. No.	ASME Category ASME Item No.	Exam Method	Exam Report No.	Status	Remarks
1B13-N2K-KB RECIRC INLET NOZZLE N2K TO SAFE-END 12" 1.125" 305-006-107	R-A R2.14	A-UT	1Q800-07-024	GEO	None.
1B13-N4E-KB FEEDWATER NOZZLE N4E TO SAFE-END 12" 1.16" 305-006-108	R-A R2.11	A-UT	1Q800-07-026	IND	Two flaws sized essentially same as RFO7.
1B13-N9A-KB JET PUMP NOZZLE N9A TO SAFE-END 4" N/A 305-006-106	R-A R3.ND	UT	0944-07-E136	NRI	60° RL exam.
1B13-N9A-KB JET PUMP NOZZLE N9A TO SAFE-END 4" N/A 305-006-106	R-A R3.ND	UT	0944-07-E135	NRI	45° RL exam.
1B13-N9A-KB JET PUMP NOZZLE N9A TO SAFE-END 4" N/A 305-006-106	R-A R3.ND	UT	0944-07-E134	NRI	45° S exam.
1B13-N9A-KB JET PUMP NOZZLE N9A TO SAFE-END 4" N/A 305-006-106	R-A R3.ND	UT	0944-07-E133	NRI	38° RL exam.
1B13-N9A-KC JET PUMP INSTR. NOZZLE N9A SAFE-END TO PENE. SEAL 4" N/A 305-006-106	R-A R3.ND	UT	0944-07-E194	NRI	45° S exam.
1B13-N9A-KC JET PUMP INSTR. NOZZLE N9A SAFE-END TO PENE. SEAL 4" N/A 305-006-106	R-A R3.ND	UT	0944-07-E195	NRI	70° S exam.
1B13-N9B-IR JET PUMP NOZZLE N9B INNER RADIUS 4" N/A 305-006-106	B-D B3.100	UT	1Q800-07-006	NRI	None.
1B13-N9B-KA JET PUMP NOZZLE N9B TO VESSEL 4" N/A 305-006-106	B-D B3.90	UT	1Q800-07-008	NRI	94.8% coverage..

ID of Component Examined Description of Component Size - Sched. - ISI Dwg. No.	ASME Category ASME Item No.	Exam Method	Exam Report No.	Status	Remarks
1B13-N9B-KB JET PUMP NOZZLE N9B TO SAFE-END 4" N/A 305-006-106	R-A R3.ND	UT	0944-07-E137	NRI	38° RL exam..
1B13-N9B-KB JET PUMP NOZZLE N9B TO SAFE-END 4" N/A 305-006-106	R-A R3.ND	UT	0944-07-E140	NRI	60° RL exam.
1B13-N9B-KB JET PUMP NOZZLE N9B TO SAFE-END 4" N/A 305-006-106	R-A R3.ND	UT	0944-07-E138	NRI	45° S exam.
1B13-N9B-KB JET PUMP NOZZLE N9B TO SAFE-END 4" N/A 305-006-106	R-A R3.ND	UT	0944-07-E139	NRI	45° RL exam.
1B13-N9B-KC JET PUMP INSTR. NOZZLE N9B SAFE-END TO PENE. SEAL 4" N/A 305-006-106	R-A R3.ND	UT	0944-07-E197	NRI	70° S exam.
1B13-N9B-KC JET PUMP INSTR. NOZZLE N9B SAFE-END TO PENE. SEAL 4" N/A 305-006-106	R-A R3.ND	UT	0944-07-E196	NRI	45° S exam.
1B13-CRGT-1b 9 CRD GUIDE TUBE SLEEVE TO ALIGNMENT LUG WELDS N/A N/A 305-006-120	X-A X9.10	VT-3	1Q800-07-029	SAT	Examined CRGT-2 weld of CRGTs 14/23, 14/39, 46/23, and 46/39. 100% coverage and no indications.
1B13-CRGT-2b 9 CRD GUIDE TUBE BODY TO SLEEVE WELDS N/A N/A 305-006-120	X-A X9.20	EVT1	1Q800-07-030	SAT	Examined CRGT-2 weld of CRGTs 14/23, 46/23, 46/39 and 54/31. 100% coverage on 3 & 80% on one, no relevant indications.
1B13-CRGT-3b 9 CRD GUIDE TUBE BASE TO BODY WELDS N/A N/A 305-006-120	X-A X9.20	EVT1	1Q800-07-031	SAT	Examined CRGT-3 weld of CRGTs 14/23, 14/39, 46/23, and 46/39. 100% coverage and no relevant indications.
1B13-CSPT-SL-04 CORE SUPPORT STRUCTURE, SHROUD LEG N/A N/A 305-006-121	B-N-2 B13.40	EVT1	1Q800-07-131	SAT	Approx 50% of H-10 & H-12 welds and 35% of H-11 from diffuser hole at 98 degrees. No indications.

ID of Component Examined Description of Component Size - Sched. - ISI Dwg. No.	ASME Category ASME Item No.	Exam Method	Exam Report No.	Status	Remarks
1B13-CSPT-SL-05 CORE SUPPORT STRUCTURE, SHROUD LEG N/A N/A 305-006-121	B-N-2 B13.40	EVT1	1Q800-07-132	SAT	Approx 25% of H-10, H-11, and H-12 welds. No indications.
1B13-CSHP-CW-P2 HP CORE SPRAY FLOW DIVIDER REDUCER WELDS 6" 120/40 305-006-113	X-A X3.11	EVT1	1Q800-07-033	SAT	50% coverage for P2 and P2a welds, no indications.
1B13-CSHP-CW-P3b HP CORE SPRAY HORIZONTAL PIPE TO COUPLING 6" 40 305-006-113	X-A X3.11	EVT1	1Q800-07-034	SAT	45% coverage and no indications.
1B13-CSHP-CW-P3a HP CORE SPRAY COUPLING TO HORIZONTAL PIPE 6" 40 305-006-113	X-A X3.10	EVT1	1Q800-07-035	SAT	45% coverage and no indications.
1B13-CSHP-CW-P5 HP CORE SPRAY UPPER RISER PIPE TO COUPLING 6" 40 305-006-113	X-A X3.10	EVT1	1Q800-07-036	SAT	45% coverage and no indications.
1B13-CSHP-CW-P6 HP CORE SPRAY COUPLING TO LOWER RISER PIPE 6" 40 305-006-113	X-A X3.11	EVT1	1Q800-07-037	SAT	45% coverage and no indications.
1B13-CSHP-CW-P4c HP CORE SPRAY LOWER RISER PIPE TO ELBOW 6" 40/120 305-006-113	X-A X3.11	EVT1	1Q800-07-038	SAT	40% coverage and no indications.
1B13-CSHP-CW-P4d HP CORE SPRAY ELBOW TO SHROUD FLANGE 6" 120/40 305-006-113	X-A X3.11	EVT1	1Q800-07-039	SAT	80% coverage and no indications.
1B13-CSHP-CCW-P3a HP CORE SPRAY COUPLING TO HORIZONTAL PIPE 6" 40 305-006-113	X-A X3.10	EVT1	1Q800-07-040	SAT	45% coverage and no indications.
1B13-CSHP-CCW-P5 HP CORE SPRAY UPPER RISER PIPE TO COUPLING 6" 40 305-006-113	X-A X3.10	EVT1	1Q800-07-041	SAT	45% coverage and no indications.

ID of Component Examined Description of Component Size - Sched. - ISI Dwg. No.	ASME Category ASME Item No.	Exam Method	Exam Report No.	Status	Remarks
1B13-CSHP-CCW-P8 HP CORE SPRAY SHROUD FLANGE TO SHROUD 6" 40 305-006-113	X-A X3.13	VT-1	1Q800-07-042	SAT	100% coverage and no indications.
1B13-CSLP-P1 LP CORE SPRAY THERMAL SLEEVE TO FLOW DIVIDER WELDS (2) 10" 120 305-006-113	X-A X3.11	EVT1	1Q800-07-043	SAT	No credible EVT1 coverage for P1 and only 10% coverage for P1a. No indications.
1B13-CSLP-CW-P3a LP CORE SPRAY COUPLING TO HORIZONTAL PIPE 6" 40 305-006-113	X-A X3.10	EVT1	1Q800-07-044	SAT	40% coverage and no indications.
1B13-CSLP-CW-P5 LP CORE SPRAY UPPER RISER PIPE TO COUPLING 6" 40 305-006-113	X-A X3.10	EVT1	1Q800-07-045	SAT	40% coverage and no indications.
1B13-CSLP-CCW-P3a LP CORE SPRAY COUPLING TO HORIZONTAL PIPE 6" 40 305-006-113	X-A X3.10	EVT1	1Q800-07-046	SAT	45% coverage and no indications.
1B13-CSLP-CCW-P5 LP CORE SPRAY UPPER RISER PIPE TO COUPLING 6" 40 305-006-113	X-A X3.10	EVT1	1Q800-07-047	SAT	45% coverage and no indications.
1B13-CSLP-CCW-P6 LP CORE SPRAY COUPLING TO LOWER RISER PIPE 6" 40 305-006-113	X-A X3.11	EVT1	1Q800-07-048	SAT	45% coverage and no indications.
1B13-CSS-7-SB CORE SPRAY SPARGER BRACKETS N/A 305-006-116	X-A X3.22	VT-1	1Q800-07-049	SAT	80% coverage of brackets at 32 and 50 degrees and 90-100% coverage of their bolting on the outside of the shroud. No indications.
1B13-CSS-173-S2 CORE SPRAY SPARGER TEE TO SPARGER PIPE WELDS (2) 5" 305-006-115	X-A X3.20	EVT1	1Q800-07-050	SAT	35% coverage on counter-clockwise side and 50% coverage on clockwise side. No indications.
1B13-CSS-173-S3ab CORE SPRAY SPARGER SPRAY NOZZLE WELDS (2 EA NOZZ) 5" 305-006-115	X-A X3.21	VT-1	1Q800-07-051	SAT	50% coverage and no indications.

ID of Component Examined Description of Component Size - Sched. - ISI Dwg. No.	ASME Category ASME Item No.	Exam Method	Exam Report No.	Status	Remarks
1B13-CSS-173-S4 CORE SPRAY SPARGER PIPE TO END CAP WELDS (2) 5" 305-006-115	X-A X3.20	EVT1	1Q800-07-052	SAT	50% coverage for both welds and no indications.
1B13-CSS-173-SB CORE SPRAY SPARGER BRACKETS N/A N/A 305-006-116	X-A X3.22	EVT1	1Q800-07-053	SAT	70-80% coverage for each of the ten (10) brackets and 100% coverage for the bracket bolting on the outside of the shroud. No indications.
1B13-CSS-187-S2 CORE SPRAY SPARGER TEE TO SPARGER PIPE WELDS (2) 5" 305-006-115	X-A X3.20	EVT1	1Q800-07-054	SAT	45% coverage for the counter-clockwise weld and 50% coverage for the clockwise weld. No indications.
1B13-CSS-187-S4 CORE SPRAY SPARGER PIPE TO END CAP WELDS (2) 5" 305-006-115	X-A X3.20	EVT1	1Q800-07-055	SAT	45% coverage for the counter-clockwise weld and 40% coverage for the clockwise weld. No indications.
1B13-CSS-187-SB CORE SPRAY SPARGER BRACKETS N/A N/A 305-006-116	X-A X3.22	VT-1	1Q800-07-056	SAT	70-80% coverage for each of the ten (10) brackets and 100% coverage for the bracket bolting on the outside of the shroud. No indications.
1B13-CS-H8 SHROUD SUPPORT CYLINDER TO SHROUD SUPPORT PLATE N/A N/A 305-006-121	X-A X5.21	EVT1	1Q800-07-133	SAT	Approx. 10 degrees of the underside from JP-6 diffuser hole. No indications.
1B13-CS-H9 SHROUD SUPPORT PLATE TO RX VESSEL WALL N/A N/A 305-006-121	X-A X5.20	EVT1	1Q800-07-134	SAT	Approx. 10 degrees of the underside from JP-6 diffuser hole. No indications.
1B13-FSGT-AP1b 9 CRD GUIDE TUBE & FUEL SUPPORT ALIGNMENT PINS N/A N/A 305-006-120	X-A X9.10	VT-3	1Q800-07-032	SAT	Examined alignment pins of CRGTs 14/23, 46/23, 46/39 and 54/13. 80% coverage and no indications.
1B13-FWS-DAM 150 DEGREE FW SPARGER DAMAGE, NOZZ 5-8 FROM CCW N/A N/A 305-006-118	X-A X6.13	VT-3	1Q800-07-057	SAT	100% coverage and no evidence of further degradation.
1B13-INTERIOR REACTOR VESSEL INTERIOR REGION N/A N/A 305-006-101	B-N-1 B13.10	VT-3	1Q800-07-058	SAT	100% coverage of accessible areas above the top guide flange. No relevant indications beyond previously addressed RPV crud.

ID of Component Examined Description of Component Size - Sched. - ISI Dwg. No.	ASME Category ASME Item No.	Exam Method	Exam Report No.	Status	Remarks
1B13-UPPER-INT VESSEL INTERIOR ABOVE FW SPARGERS N/A N/A 305-006-101	X-A X6.15	VT-3	1Q800-07-059	SAT	Inspection of upper vessel interior areas for RPV crud issue. No significant changes noted. See INR PNPP-R11-IVVI-07-08 for crud deposits comparison.
1B13-IRM-16/13 IRM INSTRUMENT DRY TUBE B N/A N/A 305-006-117	X-A X2.10	VT-3	1Q800-07-060	SAT	100% coverage of upper 2ft from two opposing quadrants. No indications.
1B13-IRM-16/53 IRM INSTRUMENT DRY TUBE A N/A N/A 305-006-117	X-A X2.10	VT-3	1Q800-07-061	SAT	100% coverage of upper 2ft from two opposing quadrants. No indications.
1B13-IRM-24/29 IRM INSTRUMENT DRY TUBE D N/A N/A 305-006-117	X-A X2.10	VT-3	1Q800-07-062	SAT	100% coverage of upper 2ft from two opposing quadrants. No indications.
1B13-IRM-24/37 IRM INSTRUMENT DRY TUBE C N/A N/A 305-006-117	X-A X2.10	VT-3	1Q800-07-063	SAT	100% coverage of upper 2ft from two opposing quadrants. No indications.
1B13-JPA-P3/P4 JET PUMP NOZZLE TO MIXER ASSEMBLY N/A N/A 305-006-126	X-A X1.30	VT-3	1Q800-07-064	SAT	Examined mixer throat of JP-3. No excessive crud build-up noted.
1B13-JPA-P13/P14 JET PUMP NOZZLE TO MIXER ASSEMBLY N/A N/A 305-006-126	X-A X1.30	VT-3	1Q800-07-065	SAT	Examined mixer throat of JP-13. No excessive crud build-up noted.
1B13-JPDF-P11/P12 JET PUMP DIFFUSER WELDS (10) N/A N/A 305-006-126	X-A X1.90	EVT1	1Q800-07-066	SAT	Examined DF-1, 2, 3a, 3b and AD-2 welds of JPs 11 & 12. 25-40% coverage on DF welds, 25% coverage on AD-2 welds. No indications.
1B13-JPDF-P13/P14 JET PUMP DIFFUSER WELDS (10) N/A N/A 305-006-126	X-A X1.90	EVT1	1Q800-07-067	SAT	Examined DF-1, 2, 3a, 3b and AD-2 welds of JPs 13 & 14. 25-30% coverage on DF welds, 40% coverage on AD-2 welds. No indications.
1B13-JPDF-P15/P16 JET PUMP DIFFUSER WELDS (10) N/A N/A 305-006-126	X-A X1.90	EVT1	1Q800-07-068	SAT	Examined DF-1, 2, 3a, 3b and AD-2 welds of JPs 15 & 16. 15-35% coverage on DF welds, 20-40% coverage on AD-2 welds. No indications.

ID of Component Examined Description of Component Size - Sched. - ISI Dwg. No.	ASME Category ASME Item No.	Exam Method	Exam Report No.	Status	Remarks
1B13-JPDF-P17/P18 JET PUMP DIFFUSER WELDS (10) N/A N/A 305-006-126	X-A X1.90	EVT1	1Q800-07-069	SAT	Examined DF-1, 2, 3a, 3b and AD-2 welds of JPs 17 & 18. 10-40% coverage on DF welds, 20% coverage on AD-2 welds. No indications.
1B13-JPDF-P19/P20 JET PUMP DIFFUSER WELDS (10) N/A N/A 305-006-126	X-A X1.90	EVT1	1Q800-07-070	SAT	Examined DF-1, 2, 3a, 3b and AD-2 welds of JPs 19 & 20. 20-40% coverage on DF welds, 20% coverage on AD-2 welds. No indications.
1B13-JPIN-P11/P12 JET PUMP INLET WELDS (4) N/A N/A 305-006-126	X-A X1.80	EVT1	1Q800-07-071	SAT	Examined IN-1 and IN-2 welds of JPs 11 & 12. 20-40% coverage and no indications.
1B13-JPIN-P13/P14 JET PUMP INLET WELDS (4) N/A N/A 305-006-126	X-A X1.80	EVT1	1Q800-07-072	SAT	Examined IN-1 and IN-2 welds of JPs 13 & 14. 20-25% coverage and no indications.
1B13-JPIN-P15/P16 JET PUMP INLET WELDS (4) N/A N/A 305-006-126	X-A X1.80	EVT1	1Q800-07-073	SAT	Examined IN-1 and IN-2 welds of JPs 15 & 16. 25% coverage and no indications.
1B13-JPIN-P17/P18 JET PUMP INLET WELDS (4) N/A N/A 305-006-126	X-A X1.80	EVT1	1Q800-07-074	SAT	Examined IN-1 and IN-2 welds of JPs 17 & 18. 25% coverage and no indications.
1B13-JPIN-P19/P20 JET PUMP INLET WELDS (4) N/A N/A 305-006-126	X-A X1.80	EVT1	1Q800-07-075	SAT	Examined IN-1 and IN-2 welds of JPs 19 & 20. 25% coverage and no indications.
1B13-JPLAW-P11 JET PUMP SENSING LINE ATTACHMENT WELDS N/A N/A 305-006-125	X-A X1.20	VT-3	1Q800-07-076	SAT	Examined the 3 sensing line brackets of JP-11 and they were all intact.
1B13-JPLAW-P12 JET PUMP SENSING LINE ATTACHMENT WELDS N/A N/A 305-006-125	X-A X1.20	VT-3	1Q800-07-077	SAT	Examined the 3 sensing line brackets of JP-12 and they were all intact.
1B13-JPLAW-P13 JET PUMP SENSING LINE ATTACHMENT WELDS N/A N/A 305-006-125	X-A X1.20	VT-3	1Q800-07-078	SAT	Examined the 3 sensing line brackets of JP-13 and they were all intact.

ID of Component Examined Description of Component Size - Sched. - ISI Dwg. No.	ASME Category ASME Item No.	Exam Method	Exam Report No.	Status	Remarks
1B13-JPLAW-P14 JET PUMP SENSING LINE ATTACHMENT WELDS N/A N/A 305-006-125	X-A X1.20	VT-3	1Q800-07-079	SAT	Examined the 3 sensing line brackets of JP-14 and they were all intact.
1B13-JPLAW-P15 JET PUMP SENSING LINE ATTACHMENT WELDS N/A N/A 305-006-125	X-A X1.20	VT-3	1Q800-07-080	SAT	Examined the 3 sensing line brackets of JP-15 and they were all intact.
1B13-JPLAW-P16 JET PUMP SENSING LINE ATTACHMENT WELDS N/A N/A 305-006-125	X-A X1.20	VT-3	1Q800-07-081	SAT	Examined the 3 sensing line brackets of JP-16 and they were all intact.
1B13-JPLAW-P17 JET PUMP SENSING LINE ATTACHMENT WELDS N/A N/A 305-006-125	X-A X1.20	VT-3	1Q800-07-082	SAT	Examined the 3 sensing line brackets of JP-17 and they were all intact.
1B13-JPLAW-P18 JET PUMP SENSING LINE ATTACHMENT WELDS N/A N/A 305-006-125	X-A X1.20	VT-3	1Q800-07-083	SAT	Examined the 3 sensing line brackets of JP-18 and they were all intact.
1B13-JPLAW-P19 JET PUMP SENSING LINE ATTACHMENT WELDS N/A N/A 305-006-125	X-A X1.20	VT-3	1Q800-07-084	SAT	Examined the 3 sensing line brackets of JP-19 and they were all intact.
1B13-JPLAW-P20 JET PUMP SENSING LINE ATTACHMENT WELDS N/A N/A 305-006-125	X-A X1.20	VT-3	1Q800-07-085	SAT	Examined the 3 sensing line brackets of JP-20 and they were all intact.
1B13-JPRB-P11/P12 JET PUMP RISER BRACE WELDS (8) N/A N/A 305-006-125	X-A X1.40	EVT1	1Q800-07-086	SAT	Examined RB-1a-d and RB-2a-d welds. 45-100% coverage and no indications.
1B13-JPRB-P13/P14 JET PUMP RISER BRACE WELDS (8) N/A N/A 305-006-125	X-A X1.40	EVT1	1Q800-07-087	SAT	Examined RB-1a-d and RB-2a-d welds. 40-100% coverage and no indications.
1B13-JPRB-P15/P16 JET PUMP RISER BRACE WELDS (8) N/A N/A 305-006-125	X-A X1.40	EVT1	1Q800-07-088	SAT	Examined RB-1a-d and RB-2a-d welds. 40-100% coverage and no indications.

ID of Component Examined Description of Component Size - Sched. - ISI Dwg. No.	ASME Category ASME Item No.	Exam Method	Exam Report No.	Status	Remarks
1B13-JPRB-P17/P18 JET PUMP RISER BRACE WELDS (8) N/A N/A 305-006-125	X-A X1.40	EVT1	1Q800-07-089	SAT	Examined RB-1a-d and RB-2a-d welds. 50-60% coverage and no indications.
1B13-JPRB-P19/P20 JET PUMP RISER BRACE WELDS (8) N/A N/A 305-006-125	X-A X1.40	EVT1	1Q800-07-090	SAT	Examined RB-1a-d and RB-2a-d welds. 50% coverage and no indications.
1B13-JPRBA-P11/P12 JET PUMP RISER BRACE ARM/VESSEL ATTACHMENT WELDS N/A N/A 305-006-125	B-N-2 B13.20	EVT1	1Q800-07-091	SAT	Exams performed in conjunction with BWRVIP-41 riser brace to vessel exams. No indications.
1B13-JPRBA-P13/P14 JET PUMP RISER BRACE ARM/VESSEL ATTACHMENT WELDS N/A N/A 305-006-125	B-N-2 B13.20	EVT1	1Q800-07-092	SAT	Exams performed in conjunction with BWRVIP-41 riser brace to vessel exams. No indications.
1B13-JPRBA-P15/P16 JET PUMP RISER BRACE ARM/VESSEL ATTACHMENT WELDS N/A N/A 305-006-125	B-N-2 B13.20	EVT1	1Q800-07-093	SAT	Exams performed in conjunction with BWRVIP-41 riser brace to vessel exams. No indications.
1B13-JPRBA-P17/P18 JET PUMP RISER BRACE ARM/VESSEL ATTACHMENT WELDS N/A N/A 305-006-125	B-N-2 B13.20	EVT1	1Q800-07-094	SAT	Exams performed in conjunction with BWRVIP-41 riser brace to vessel exams. No indications.
1B13-JPRBA-P19/P20 JET PUMP RISER BRACE ARM/VESSEL ATTACHMENT WELDS N/A N/A 305-006-125	B-N-2 B13.20	EVT1	1Q800-07-095	SAT	Exams performed in conjunction with BWRVIP-41 riser brace to vessel exams. No indications.
1B13-JPREW-P1/P2 JET PUMP RISER ELBOW WELDS (2) N/A N/A 305-006-126	X-A X1.70	EVT1	1Q800-07-096	SAT	100% coverage on RS-1, 50% on RS-2. No indications.
1B13-JPREW-P3/P4 JET PUMP RISER ELBOW WELDS (2) N/A N/A 305-006-126	X-A X1.70	EVT1	1Q800-07-097	SAT	100% coverage on RS-1, 50% on RS-2. No indications.
1B13-JPRS6-P11/P12 JET PUMP RISER PIPE TO RESTRAINER BRACKET WELDS (2) N/A N/A 305-006-126	X-A X1.72	EVT1	1Q800-07-098	SAT	Examined RS-6 (JP-12 side) and RS-7 (JP-11 side) welds. 60% coverage RS-6 and 65% coverage RS-7. No indications.

ID of Component Examined Description of Component Size - Sched. - ISI Dwg. No.	ASME Category ASME Item No.	Exam Method	Exam Report No.	Status	Remarks
1B13-JPRS6-P13/P14 JET PUMP RISER PIPE TO RESTRAINER BRACKET WELDS (2) N/A N/A 305-006-126	X-A X1.72	EVT1	1Q800-07-099	SAT	Examined RS-6 (JP-14 side) and RS-7 (JP-13 side) welds. 60% coverage for both RS-6 and RS-7. No indications.
1B13-JPRS6-P15/P16 JET PUMP RISER PIPE TO RESTRAINER BRACKET WELDS (2) N/A N/A 305-006-126	X-A X1.72	EVT1	1Q800-07-100	SAT	Examined RS-6 (JP-16 side) and RS-7 (JP-15 side) welds. 60% coverage for RS-6 and 50% for RS-7. No indications.
1B13-JPRS6-P17/P18 JET PUMP RISER PIPE TO RESTRAINER BRACKET WELDS (2) N/A N/A 305-006-126	X-A X1.72	EVT1	1Q800-07-101	SAT	Examined RS-6 (JP-18 side) and RS-7 (JP-17 side) welds. 80% coverage for for both RS-6 and RS-7. No indications.
1B13-JPRS6-P19/P20 JET PUMP RISER PIPE TO RESTRAINER BRACKET WELDS (2) N/A N/A 305-006-126	X-A X1.72	EVT1	1Q800-07-102	SAT	Examined RS-6 (JP-20 side) and RS-7 (JP-19 side) welds. 60% coverage for for both RS-6 and RS-7. No indications.
1B13-JPRS8-P11/P12 JET PUMP RISER PIPE TO RISER BRACE YOKE WELDS (2) N/A N/A 305-006-125	X-A X1.72	EVT1	1Q800-07-103	SAT	Examined RS-8 (lower) and RS-9 (upper) riser brace to yoke welds. 90% coverage for for both RS-8 and RS-9. No indications.
1B13-JPRS8-P13/P14 JET PUMP RISER PIPE TO RISER BRACE YOKE WELDS (2) N/A N/A 305-006-125	X-A X1.72	EVT1	1Q800-07-104	SAT	Examined RS-8 (lower) and RS-9 (upper) riser brace to yoke welds. 90% coverage for for both RS-8 and RS-9. No indications.
1B13-JPRS8-P15/P16 JET PUMP RISER PIPE TO RISER BRACE YOKE WELDS (2) N/A N/A 305-006-125	X-A X1.72	EVT1	1Q800-07-105	SAT	Examined RS-8 (lower) and RS-9 (upper) riser brace to yoke welds. 90% coverage for for both RS-8 and RS-9. No indications.
1B13-JPRS8-P17/P18 JET PUMP RISER PIPE TO RISER BRACE YOKE WELDS (2) N/A N/A 305-006-125	X-A X1.72	EVT1	1Q800-07-106	SAT	Examined RS-8 (lower) and RS-9 (upper) riser brace to yoke welds. 80% coverage for RS-8 and 60% for RS-9. No indications.
1B13-JPRS8-P19/P20 JET PUMP RISER PIPE TO RISER BRACE YOKE WELDS (2) N/A N/A 305-006-125	X-A X1.72	EVT1	1Q800-07-107	SAT	Examined RS-8 (lower) and RS-9 (upper) riser brace to yoke welds. 70% coverage for RS-8 and 80% for RS-9. No indications.
1B13-JPTW-P06 JET PUMP RESTRAINER ADJUSTING SCREW TACK WELDS N/A N/A 305-006-125	X-A X1.50	VT-1	1Q800-07-028	SAT	Pre-disassembly found a small gap (< 0.010) on vessel side set screw, none upon re-assembly.

ID of Component Examined Description of Component Size - Sched. - ISI Dwg. No.	ASME Category ASME Item No.	Exam Method	Exam Report No.	Status	Remarks
1B13-JPWD-P1/P2 JET PUMP RESTRAINER BRACKET WEDGE BEARING SURFACE N/A N/A 305-006-125	X-A X1.51	VT-1	1Q800-07-108	SAT	Examined wedge assemblies of JPs 1 and 2. No signs of wear.
1B13-JPWD-P3/P4 JET PUMP RESTRAINER BRACKET WEDGE BEARING SURFACE N/A N/A 305-006-125	X-A X1.51	VT-1	1Q800-07-109	SAT	Examined wedge assemblies of JPs 3 and 4. No signs of wear. Minor rub marks on wedge rod of JP-4.
1B13-JPWD-P5/P6 JET PUMP RESTRAINER BRACKET WEDGE BEARING SURFACE N/A N/A 305-006-125	X-A X1.51	VT-1	1Q800-07-110	SAT	Examined wedge assemblies of JPs 5 and 6. No signs of wear.
1B13-JPWD-P7/P8 JET PUMP RESTRAINER BRACKET WEDGE BEARING SURFACE N/A N/A 305-006-125	X-A X1.51	VT-1	1Q800-07-111	SAT	Examined wedge assemblies of JPs 7 and 8. No signs of wear.
1B13-JPWD-P9/P10 JET PUMP RESTRAINER BRACKET WEDGE BEARING SURFACE N/A N/A 305-006-125	X-A X1.51	VT-1	1Q800-07-112	SAT	Examined wedge assemblies of JPs 9 and 10. Minor wedge rod wear on JP-10 (see CR 07-18581).
1B13-JPWD-P11/P12 JET PUMP RESTRAINER BRACKET WEDGE BEARING SURFACE N/A N/A 305-006-125	X-A X1.51	VT-1	1Q800-07-113	SAT	Examined wedge assemblies of JPs 11 and 12. No signs of wear.
1B13-JPWD-P13/P14 JET PUMP RESTRAINER BRACKET WEDGE BEARING SURFACE N/A N/A 305-006-125	X-A X1.51	VT-1	1Q800-07-114	SAT	Examined wedge assemblies of JPs 13 and 14. No signs of wear.
1B13-JPWD-P15/P16 JET PUMP RESTRAINER BRACKET WEDGE BEARING SURFACE N/A N/A 305-006-125	X-A X1.51	VT-1	1Q800-07-115	SAT	Examined wedge assemblies of JPs 15 and 16. No signs of wear on JP-16 and wedge wear found on JP-15 in RFO10 is unchanged (see CR 07-18578).
1B13-JPWD-P17/P18 JET PUMP RESTRAINER BRACKET WEDGE BEARING SURFACE N/A N/A 305-006-125	X-A X1.51	VT-1	1Q800-07-116	SAT	Examined wedge assemblies of JPs 17 and 18. Minor wedge rod wear on JP-17 (see CR 07-18581).
1B13-JPWD-P19/P20 JET PUMP RESTRAINER BRACKET WEDGE BEARING SURFACE N/A N/A 305-006-125	X-A X1.51	VT-1	1Q800-07-117	SAT	Examined wedge assemblies of JPs 19 and 20. No signs of wear.

ID of Component Examined Description of Component Size - Sched. - ISI Dwg. No.	ASME Category ASME Item No.	Exam Method	Exam Report No.	Status	Remarks
1B13-LPRM-SAMP LPRM INSTRUMENT DRY TUBES 10% SAMPLE N/A N/A 305-006-117	X-A X2.11	VT-3	1Q800-07-118	SAT	Examined LPRMs 24/41, 32/57, 40/57, 41/16, 48/17 and 48/41 from one quadrant, and 40/49 and 48/25 from two quadrants. No indications.
1B13-LPCI-B61 LOOP B LPCI COUPLING PIPE WELDS (4) N/A N/A 305-006-124	X-A X8.10	EVT1	1Q800-07-119	SAT	BWRVIP-42 6-1a through 6-1d welds. Best effort exam for 6-1a weld as it is within nozzle bore. 40-50% coverage on other welds. No indications.
1B13-LPCI-BST LOOP B LPCI COUPLING STRUT WELDS (3) N/A N/A 305-006-124	X-A X8.20	EVT1	1Q800-07-120	SAT	BWRVIP-42 6-4, 6-5a and 6-5b welds. 75-90% coverage and indications.
1B13-LPCI-B66 LOOP B LPCI SHROUD ATTACHMENT RING WELD N/A N/A 305-006-124	X-A X8.30	VE	1Q800-07-121	SAT	BWRVIP-42 6-6b weld. 90% coverage and indications.
1B13-SD-STRUCT STEAM DRYER STRUCTURAL N/A N/A 305-006-119	X-A X4.11	VT-3	1Q800-07-122	SAT	Examined 90 and 270 degree sides for comparison of crud to previous outage. No significant changes noted.
1B13-SHSAM SHROUD HEAD STUD ASY MOD LOCKING PINS N/A N/A 305-006-119	X-A X6.14	VT-3	1Q800-07-123	SAT	Examined the 16 SHSAMs for anti-rotation pin wear. The worst was the counter-clockwise side of #2 with 45% wear (see CR 07-18329).
1B13-SRM-16/45 SRM INSTRUMENT DRY TUBE A N/A N/A 305-006-117	X-A X2.10	VT-3	1Q800-07-124	SAT	Examined upper 2 feet of SRM from two opposing quadrants. No indications.
1B13-SRM-40/21 SRM INSTRUMENT DRY TUBE C N/A N/A 305-006-117	X-A X2.10	VT-3	1Q800-07-125	SAT	Examined upper 2 feet of SRM from two opposing quadrants. No indications.
1B13-SSAHC SHROUD SUPPORT ACCESS HOLE COVER WELD N/A N/A 305-006-121	X-A X5.30	EVT1	1Q800-07-126	SAT	Examined cover plate to cylinder and cylinder to shroud support plate welds. 40% coverage and no indications.
1B13-SSL SHROUD SUPPORT LEG WELDS N/A N/A 305-006-101	X-A X5.40	EVT1	1Q800-07-135	SAT	Portions of H-10, H-11 and H-12 Shroud Support leg welds of legs 4 and 5. No indications.

ID of Component Examined Description of Component Size - Sched. - ISI Dwg. No.	ASME Category ASME Item No.	Exam Method	Exam Report No.	Status	Remarks
1B21-0129 26" PEN. P124 PROCESS PIPE TO VALVE F028A 26" 1.196" 305-605-107	R-A R2.ND	UT	0944-07-E141	GEO	Counterbore located 1.8" DNST valve side from Weld CL.
1B21-F0028C-IS 26" GLOBE, MSIV,INTERNAL SURFACE (GROUPING NO. II) 26" N/A 305-605-109	B-M-2 B12.50	VT-3	1042-07A-023	SAT	Internal inspection performed when valve was reworked due to failed LLRT. Interior exan acceptable, but CR 07-18780 written for seat indications.
1B21-F028A-1B MSIV STUD N/A N/A 305-605-111	B-G-1 B6.210	UT	0944-07-E106	NRI	Additional exams for indications found in 1B21-F028A-18B that were later proven to be non-relevant.
1B21-F028A-1B MSIV STUD N/A N/A 305-605-111	B-G-1 B6.210	UT	0944-07-E105	NRI	Additional exams for indications found in 1B21-F028A-18B that were later proven to be non-relevant.
1B21-F028A-2B MSIV STUD N/A N/A 305-605-111	B-G-1 B6.210	UT	0944-07-E107	NRI	Additional exams for indications found in 1B21-F028A-18B that were later proven to be non-relevant.
1B21-F028A-2B MSIV STUD N/A N/A 305-605-111	B-G-1 B6.210	UT	0944-07-E108	NRI	Additional exams for indications found in 1B21-F028A-18B that were later proven to be non-relevant.
1B21-F028A-3B MSIV STUD N/A N/A 305-605-111	B-G-1 B6.210	UT	0944-07-E109	NRI	Additional exams for indications found in 1B21-F028A-18B that were later proven to be non-relevant.
1B21-F028A-3B MSIV STUD N/A N/A 305-605-111	B-G-1 B6.210	UT	0944-07-E110	NRI	Additional exams for indications found in 1B21-F028A-18B that were later proven to be non-relevant.
1B21-F028A-4B MSIV STUD N/A N/A 305-605-111	B-G-1 B6.210	UT	0944-07-E111	NRI	Additional exams for indications found in 1B21-F028A-18B that were later proven to be non-relevant.
1B21-F028A-4B MSIV STUD N/A N/A 305-605-111	B-G-1 B6.210	UT	0944-07-E112	NRI	Additional exams for indications found in 1B21-F028A-18B that were later proven to be non-relevant.

ID of Component Examined Description of Component Size - Sched. - ISI Dwg. No.	ASME Category ASME Item No.	Exam Method	Exam Report No.	Status	Remarks
1B21-F028A-5B MSIV STUD N/A N/A 305-605-111	B-G-1 B6.210	UT	0944-07-E114	NRI	Additional exams for indications found in 1B21-F028A-18B that were later proven to be non-relevant.
1B21-F028A-5B MSIV STUD N/A N/A 305-605-111	B-G-1 B6.210	UT	0944-07-E113	NRI	Additional exams for indications found in 1B21-F028A-18B that were later proven to be non-relevant.
1B21-F028A-6B MSIV STUD N/A N/A 305-605-111	B-G-1 B6.210	UT	0944-07-E115	NRI	Additional exams for indications found in 1B21-F028A-18B that were later proven to be non-relevant.
1B21-F028A-6B MSIV STUD N/A N/A 305-605-111	B-G-1 B6.210	UT	0944-07-E116	NRI	Additional exams for indications found in 1B21-F028A-18B that were later proven to be non-relevant.
1B21-F028A-13B MSIV STUD N/A N/A 305-605-111	B-G-1 B6.210	UT	0944-07-E094	GEO	Zone 2 Exam.
1B21-F028A-13B MSIV STUD N/A N/A 305-605-111	B-G-1 B6.210	UT	0944-07-E093	NRI	Zone 1 Exam.
1B21-F028A-14B MSIV STUD N/A N/A 305-605-111	B-G-1 B6.210	UT	0944-07-E096	NRI	Zone 2 Exam.
1B21-F028A-14B MSIV STUD N/A N/A 305-605-111	B-G-1 B6.210	UT	0944-07-E095	NRI	Zone 1 Exam.
1B21-F028A-15B MSIV STUD N/A N/A 305-605-111	B-G-1 B6.210	UT	0944-07-E098	NRI	Zone 2 Exam.
1B21-F028A-15B MSIV STUD N/A N/A 305-605-111	B-G-1 B6.210	UT	0944-07-E097	NRI	Zone 1 Exam.

ID of Component Examined Description of Component Size - Sched. - ISI Dwg. No.	ASME Category ASME Item No.	Exam Method	Exam Report No.	Status	Remarks
1B21-F028A-16B MSIV STUD N/A N/A 305-605-111	B-G-1 B6.210	UT	0944-07-E100	NRI	Zone 2 Exam.
1B21-F028A-16B MSIV STUD N/A N/A 305-605-111	B-G-1 B6.210	UT	0944-07-E099	NRI	Zone 1 Exam.
1B21-F028A-17B MSIV STUD N/A N/A 305-605-111	B-G-1 B6.210	UT	0944-07-E102	NRI	Zone 2 Exam.
1B21-F028A-17B MSIV STUD N/A N/A 305-605-111	B-G-1 B6.210	UT	0944-07-E101	NRI	Zone 1 Exam.
1B21-F028A-18B MSIV STUD N/A N/A 305-605-111	B-G-1 B6.210	UT	0944-07-E104	GEO	Zone 2 Exam. Reference Report No. 0944-07-E094 (Page 2) for Indications 1 and 2.
1B21-F028A-18B MSIV STUD N/A N/A 305-605-111	B-G-1 B6.210	UT	0944-07-E103	NRI	Zone 1 Exam.
1B21-H0004 MECHANICAL SNUBBER 14" N/A 305-605-128	F-A F3.SN	VT-3	VT-07-0202	SAT	None.
1B21-H0053 VARIABLE SPRING (WA) 14" N/A 305-605-130	F-A F3.SP	VT-3	1042-07-033	SAT	None.
1B21-H0053-WA INTEGRAL ATTACHMENT VARIABLE SPRING 14" N/A 305-605-130	D-Ac D1.20	VT-1	1042-07-034	SAT	None.
1B21-H0119 MECHANICAL SNUBBER (WA) (TANDEM) 12" N/A 305-605-122	F-A F3.SN	VT-3	VT-07-0207/0208	SAT	None.

ID of Component Examined Description of Component Size - Sched. - ISI Dwg. No.	ASME Category ASME Item No.	Exam Method	Exam Report No.	Status	Remarks
1B21-H0119-WA INTEGRAL ATTACHMENT MECHANICAL SNUBBER 12" N/A 305-605-122	D-Ac D1.20	VT-1	1042-07-086	SAT	None.
1B21-H0161 RIGID STRUT (WA) 12" N/A 305-605-124	F-A F3.ST	VT-3	1042-07-016	SAT	None.
1B21-H0489 RIGID GUIDE 2" N/A 305-605-105	F-A F1.G	VT-3	1042-07-013	SAT	None.
1B21-P124-WA P124 FLUED HD FITTING TO PROCESS PIPE ATTACH WELD 26" 1.196 305-605-107	B-Kc B10.20	MT	0942-07A-014	SAT	Examined the outside surfaces, equalling 50% coverage (IR-007), of the Flued Head Penetration attachment weld.
1B21-P124-WA @ P124 FLUED HD FITTING TO PROCESS PIPE ATTACH WELD 26" 1.196 305-605-107	X-E X10.20	UT	0944-07-E131	NRI	Augmented exam for High Energy Break Exclusion Region requirements.
1B21-P124-WA @ P124 FLUED HD FITTING TO PROCESS PIPE ATTACH WELD 26" 1.196 305-605-107	X-E X10.20	UT	0944-07-E130	NRI	Augmented exam for High Energy Break Exclusion Region requirements.
1B21-P124-WA @ P124 FLUED HD FITTING TO PROCESS PIPE ATTACH WELD 26" 1.196 305-605-107	X-E X10.20	UT	0944-07-E132	NRI	Augmented exam for High Energy Break Exclusion Region requirements.
1B21-S102A HYDRAULIC SNUBBER MPL 1B21G7072 26" N/A 305-605-101	F-A F1.SN	VT-3	VT-07-0436	SAT	None.
1B21-S107C HYDRAULIC SNUBBER MPL 1B21G7091 26" N/A 305-605-103	F-A F1.SN	VT-3	VT-07-0437	SAT	None.
1B33-C001B-1B PUMP BOLTING N/A N/A 305-602-105	B-G-1 B6.180	UT	0944-07-E155	NRI	Zone 2 Exam.

ID of Component Examined Description of Component Size - Sched. - ISI Dwg. No.	ASME Category ASME Item No.	Exam Method	Exam Report No.	Status	Remarks
1B33-C001B-1B PUMP BOLTING N/A N/A 305-602-105	B-G-1 B6.180	UT	0944-07-E154	NRI	Zone 1 Exam.
1B33-C001B-2B PUMP BOLTING N/A N/A 305-602-105	B-G-1 B6.180	UT	0944-07-E156	NRI	Zone 1 Exam.
1B33-C001B-2B PUMP BOLTING N/A N/A 305-602-105	B-G-1 B6.180	UT	0944-07-E157	NRI	Zone 2 Exam.
1B33-C001B-3B PUMP BOLTING N/A N/A 305-602-105	B-G-1 B6.180	UT	0944-07-E159	NRI	Zone 2 Exam.
1B33-C001B-3B PUMP BOLTING N/A N/A 305-602-105	B-G-1 B6.180	UT	0944-07-E158	NRI	Zone 1 Exam.
1B33-C001B-4B PUMP BOLTING N/A N/A 305-602-105	B-G-1 B6.180	UT	0944-07-E160	NRI	Zone 1 Exam.
1B33-C001B-4B PUMP BOLTING N/A N/A 305-602-105	B-G-1 B6.180	UT	0944-07-E161	NRI	Zone 2 Exam.
1B33-C001B-5B PUMP BOLTING N/A N/A 305-602-105	B-G-1 B6.180	UT	0944-07-E163	NRI	Zone 2 Exam.
1B33-C001B-5B PUMP BOLTING N/A N/A 305-602-105	B-G-1 B6.180	UT	0944-07-E162	NRI	Zone 1 Exam.
1B33-C001B-6B PUMP BOLTING N/A N/A 305-602-105	B-G-1 B6.180	UT	0944-07-E165	NRI	Zone 2 Exam.

ID of Component Examined Description of Component Size - Sched. - ISI Dwg. No.	ASME Category ASME Item No.	Exam Method	Exam Report No.	Status	Remarks
1B33-C001B-6B PUMP BOLTING N/A N/A 305-602-105	B-G-1 B6.180	UT	0944-07-E164	NRI	Zone 1 Exam.
1B33-C001B-7B PUMP BOLTING N/A N/A 305-602-105	B-G-1 B6.180	UT	0944-07-E166	NRI	Zone 1 Exam.
1B33-C001B-7B PUMP BOLTING N/A N/A 305-602-105	B-G-1 B6.180	UT	0944-07-E167	NRI	Zone 2 Exam.
1B33-C001B-8B PUMP BOLTING N/A N/A 305-602-105	B-G-1 B6.180	UT	0944-07-E168	NRI	Zone 1 Exam.
1B33-C001B-8B PUMP BOLTING N/A N/A 305-602-105	B-G-1 B6.180	UT	0944-07-E169	NRI	Zone 2 Exam.
1B33-C001B-9B PUMP BOLTING N/A N/A 305-602-105	B-G-1 B6.180	UT	0944-07-E170	NRI	Zone 1 Exam.
1B33-C001B-9B PUMP BOLTING N/A N/A 305-602-105	B-G-1 B6.180	UT	0944-07-E171	NRI	Zone 2 Exam.
1B33-C001B-10B PUMP BOLTING N/A N/A 305-602-105	B-G-1 B6.180	UT	0944-07-E172	NRI	Zone 1 Exam.
1B33-C001B-10B PUMP BOLTING N/A N/A 305-602-105	B-G-1 B6.180	UT	0944-07-E173	NRI	Zone 2 Exam.
1B33-C001B-11B PUMP BOLTING N/A N/A 305-602-105	B-G-1 B6.180	UT	0944-07-E175	NRI	Zone 2 Exam.

ID of Component Examined Description of Component Size - Sched. - ISI Dwg. No.	ASME Category ASME Item No.	Exam Method	Exam Report No.	Status	Remarks
1B33-C001B-11B PUMP BOLTING N/A N/A 305-602-105	B-G-1 B6.180	UT	0944-07-E174	NRI	Zone 1 Exam.
1B33-C001B-11N NUT N/A N/A 305-602-105	B-G-1 B6.200	VT-1	1042-07-091	SAT	None.
1B33-C001B-12B PUMP BOLTING N/A N/A 305-602-105	B-G-1 B6.180	UT	0944-07-E177	NRI	Zone 2 Exam.
1B33-C001B-12B PUMP BOLTING N/A N/A 305-602-105	B-G-1 B6.180	UT	0944-07-E176	NRI	Zone 1 Exam.
1B33-C001B-12N NUT N/A N/A 305-602-105	B-G-1 B6.200	VT-1	1042-07-092	SAT	None.
1B33-C001B-13B PUMP BOLTING N/A N/A 305-602-105	B-G-1 B6.180	UT	0944-07-E179	NRI	Zone 2 Exam.
1B33-C001B-13B PUMP BOLTING N/A N/A 305-602-105	B-G-1 B6.180	UT	0944-07-E178	NRI	Zone 1 Exam.
1B33-C001B-13N NUT N/A N/A 305-602-105	B-G-1 B6.200	VT-1	1042-07-093	SAT	None.
1B33-C001B-14B PUMP BOLTING N/A N/A 305-602-105	B-G-1 B6.180	UT	0944-07-E181	NRI	Zone 2 Exam.
1B33-C001B-14B PUMP BOLTING N/A N/A 305-602-105	B-G-1 B6.180	UT	0944-07-E180	NRI	Zone 1 Exam.

ID of Component Examined Description of Component Size - Sched. - ISI Dwg. No.	ASME Category ASME Item No.	Exam Method	Exam Report No.	Status	Remarks
1B33-C001B-14N NUT N/A N/A 305-602-105	B-G-1 B6.200	VT-1	1042-07-094	SAT	None.
1B33-C001B-15B PUMP BOLTING N/A N/A 305-602-105	B-G-1 B6.180	UT	0944-07-E182	NRI	Zone 1 Exam.
1B33-C001B-15B PUMP BOLTING N/A N/A 305-602-105	B-G-1 B6.180	UT	0944-07-E183	NRI	Zone 2 Exam.
1B33-C001B-15N NUT N/A N/A 305-602-105	B-G-1 B6.200	VT-1	1042-07-095	SAT	None.
1B33-C001B-16B PUMP BOLTING N/A N/A 305-602-105	B-G-1 B6.180	UT	0944-07-E185	NRI	Zone 2 Exam.
1B33-C001B-16B PUMP BOLTING N/A N/A 305-602-105	B-G-1 B6.180	UT	0944-07-E184	NRI	Zone 1 Exam.
1B33-C001B-16N NUT N/A N/A 305-602-105	B-G-1 B6.200	VT-1	1042-07-096	SAT	None.
1B33-H353B VARIABLE SPRING, MPL 1B33G7021B 16" N/A 305-602-103	F-A F1.SP	VT-3	1042-07-087	SAT	None.
1B33-S371A HYDRAULIC SNUBBER, PUMP MOTOR, MPL 1B33G7066A N/A N/A 305-602-102	F-A F1.40	VT-3	VT-07-0416	SAT	None.
1C11-0033 8" PIPE TO TEE 8" 100 305-871-104	C-F-2 C5.51	UT	0944-07-E091	NRI	ID geometry observed intermittently 360° below recordable levels.

ID of Component Examined Description of Component Size - Sched. - ISI Dwg. No.	ASME Category ASME Item No.	Exam Method	Exam Report No.	Status	Remarks
1C11-0047 8" X 12" REDUCING ELBOW TO PIPE 12" 100 305-871-101	C-F-2 C5.51	UT	0944-07-E092	NRI	ID geometry observed intermittently 360° below recordable levels.
1C11-H0040 RIGID GUIDE (WA) 8" N/A 305-871-104	F-A F2.G	VT-3	1042-07-019	SAT	None.
1C11-H0040-WA PIPING SUPPORT WELDED ATTACHMENT 8" N/A 305-871-104	C-Cc C3.20	PT	0941-07A-003	SAT	None.
1C11-H0050 RIGID STRUT 8" N/A 305-871-101	F-A F2.ST	VT-3	1042-07-018	SAT	None.
1C11-H0663 MECHANICAL SNUBBER 8" N/A 305-871-103	F-A F2.SN	VT-3	VT-07-0065	SAT	None.
1E12-0055 18" PIPE TO VALVE F067 18" 40 305-642-110	C-F-2 C5.51	UT	0944-07-E016	NRI	None.
1E12-0056 VALVE F067 TO 18" PIPE 18" 40 305-642-110	C-F-2 C5.51	UT	0944-07-E017	NRI	None.
1E12-0086 24" PIPE TO FLANGE 24" 40 305-642-114	C-F-2 C5.51	UT	0944-07-E014	NRI	None.
1E12-0086 24" PIPE TO FLANGE 24" 40 305-642-114	C-F-2 C5.51	UT	0944-07-E013	NRI	None.
1E12-0205 20" PIPE TO HEAT EXCHANGER B001D INLET NOZZLE 20" 40 305-643-113	C-F-2 C5.51	UT	0944-07-E003	NRI	None.

ID of Component Examined Description of Component Size - Sched. - ISI Dwg. No.	ASME Category ASME Item No.	Exam Method	Exam Report No.	Status	Remarks
1E12-0215 18" PIPE TO VALVE F029C 18" 40 305-643-117	C-F-2 C5.51	UT	0944-07-E015	NRI	None.
1E12-0638 ELBOW TO 18" PIPE 18" STD 305-643-109	C-F-2 C5.51	UT	0944-07-E004	NRI	Previous geometry noted below recording levels.
1E12-0688 12" ELBOW TO PIPE 12" 40 305-642-136	C-F-2 C5.51	UT	0944-07-E009	GEO	Observed root geometry above and below recordable levels intermittently 360°.
1E12-0688 12" ELBOW TO PIPE 12" 40 305-642-136	C-F-2 C5.51	UT	0944-07-E010	GEO	Observed root geometry at varying amplitudes intermittently 360° as previously recorded.
1E12-0696 12" ELBOW TO PIPE 12" 80 305-642-137	R-A R2.ND	UT	0944-07-E127	NRI	None.
1E12-0696 12" ELBOW TO PIPE 12" 80 305-642-137	R-A R2.ND	UT	0944-07-E128	NRI	None.
1E12-0696 12" ELBOW TO PIPE 12" 80 305-642-137	R-A R2.ND	UT	0944-07-E129	GEO	Root and Counterbore.
1E12-0718 12" PIPE TO ELBOW 12" 80 305-642-141	R-A R2.ND	UT	0944-07-E126	GEO	Previously recorded geometry observed with no significant change.
1E12-0839 18" PIPE TO 18" X 18" X 18" TEE 18" 40 305-643-120	C-F-2 C5.51	UT	0944-07-E018	GEO	Previously recorded geometry observed with no significant changes.
1E12-C002C-004 HEAD FLANGE TO HEAD SHELL N/A N/A 305-643-122	C-G C6.10	MT	0942-07A-010	SAT	None.

ID of Component Examined Description of Component Size - Sched. - ISI Dwg. No.	ASME Category ASME Item No.	Exam Method	Exam Report No.	Status	Remarks
1E12-C002C-009 HEAD SHELL TO HEAD COVER N/A N/A 305-643-122	C-G C6.10	PT	0941-07A-002	SAT	None.
1E12-C002C-009 HEAD SHELL TO HEAD COVER N/A N/A 305-643-122	C-G C6.10	MT	0942-07A-011	SAT	None.
1E12-C002C-010 HEAD SHELL LONGITUDINAL SEAM N/A N/A 305-643-122	C-G C6.10	MT	0942-07A-012	SAT	None.
1E12-H0027 RIGID SUPPORT 12" N/A 305-642-142	F-A F1.R	VT-3	1042-07-023	SAT	None.
1E12-H0036 MECHANICAL SNUBBER 12" N/A 305-642-135	F-A F1.SN	VT-3	VT-07-0092	SAT	None.
1E12-H0051 MECHANICAL SNUBBER 12" N/A 305-642-137	F-A F1.SN	VT-3	VT-07-0118	SAT	None.
1E12-H0062 RIGID GUIDE (WA) 12" N/A 305-642-149	F-A F3.G	VT-3	1042-07-036	SAT	None.
1E12-H0062-WA INTEGRAL ATTACHMENT RIGID GUIDE 12" N/A 305-642-149	D-Ac D1.20	VT-1	1042-07-037	SAT	None.
1E12-H0084 RIGID STRUT 10" N/A 305-642-133	F-A F2.STm	VT-3	1042-07-021	SAT	None.
1E12-H0102 ANCHOR (WA < .75" T) 8" N/A 305-641-117	F-A F2.A	VT-3	1042-07-008	SAT	None.

ID of Component Examined Description of Component Size - Sched. - ISI Dwg. No.	ASME Category ASME Item No.	Exam Method	Exam Report No.	Status	Remarks
1E12-H0123 RIGID STRUT 12" N/A 305-642-132	F-A F2.ST	VT-3	1042-07-007	SAT	Reference Condition Report Number 07-16400.
1E12-H0154 RIGID GUIDE N/A 305-641-116	F-A F2.G	VT-3	1042-07-011	SAT	None.
1E12-H0185 RIGID STRUT N/A 305-643-101	F-A F2.ST	VT-3	1042-07-006	SAT	None.
1E12-H0190 MECHANICAL SNUBBER N/A 305-643-111	F-A F2.SN	VT-3	VT-07-0071	SAT	None.
1E12-H0237 VARIABLE SPRING 18" N/A 305-643-113	F-A F2.SP	VT-3	1042-07-002	SAT	None.
1E12-H0304 RIGID STRUT 8" N/A 305-641-115	F-A F2.ST	VT-3	1042-07-004	SAT	None.
1E12-H0365 MECHANICAL SNUBBER 24" N/A 305-642-114	F-A F2.SN	VT-3	VT-07-0079	SAT	None.
1E12-H0369-WA PIPING SUPPORT WELDED ATTACHMENT 24" N/A 305-642-114	C-Cc C3.20	MT	0942-07A-009	SAT	None.
1E12-H0382 MECHANICAL SNUBBER N/A 305-642-114	F-A F2.SN	VT-3	VT-07-0078	SAT	None.
1E12-H0384 VARIABLE SPRING (WA < .75" T) 10" N/A 305-642-114	F-A F2.SP	VT-3	1042-07-010	SAT	Reference Condition Report Number 07-16404.

ID of Component Examined Description of Component Size - Sched. - ISI Dwg. No.	ASME Category ASME Item No.	Exam Method	Exam Report No.	Status	Remarks
1E12-H0556 MECHANICAL SNUBBER (TANDEM) 18" N/A 305-643-109	F-A F2.SN	VT-3	VT-07-0055/0056	SAT	None.
1E12-H0565 MECHANICAL SNUBBER (TANDEM) 6" N/A 305-643-109	F-A F2.SN	VT-3	VT-07-0053/0054	SAT	None.
1E12-H0661 VARIABLE SPRING 12" N/A 305-642-137	F-A F2.SP	VT-3	1042-07-032	SAT	None.
1E12-H0693 RIGID GUIDE 12" N/A 305-642-137	F-A F2.G	VT-3	1042-07-017	SAT	None.
1E12-H0694 MECHANICAL SNUBBER 12" N/A 305-642-149	F-A F3.SN	VT-3	VT-07-0066	SAT	None.
1E12-H0708 RIGID STRUT (WA) 18" N/A 305-643-117	F-A F2.ST	VT-3	1042-07-012	SAT	None.
1E12-H0708-WA PIPING SUPPORT WELDED ATTACHMENT 18" N/A 305-643-117	C-Cc C3.20	MT	0942-07A-013	SAT	None.
1E12-H0718 RIGID STRUT N/A 305-642-133	F-A F2.ST	VT-3	1042-07-022	SAT	None.
1E12-H0726 HYDRAULIC SNUBBER 12" N/A 305-642-141	F-A F1.SN	VT-3	VT-07-0119	SAT	None.
1E12-H0748 RIGID GUIDE 12" N/A 305-642-141	F-A F1.Gs	VT-3	1042-07-035	SAT	None.

ID of Component Examined Description of Component Size - Sched. - ISI Dwg. No.	ASME Category ASME Item No.	Exam Method	Exam Report No.	Status	Remarks
1E12-H0787 MECHANICAL SNUBBER N/A 305-642-132	F-A F2.SN	VT-3	VT-07-0057	SAT	None.
1E12-P407-SP ANCHOR, PEN TO CONTAINMENT (WA) 305-642-133	F-A F2.A	VT-3	1042-07-026	SAT	None.
1E22-0002 12" ELBOW TO PIPE 12" 80 305-701-111	R-A R2.ND	UT	0944-07-E125	GEO	Previously recorded geometry observed with no significant change.
1E22-0055 16" FLANGE TO PIPE 16" 100 305-701-103	C-F-2 C5.51	UT	0944-07-E007	NRI	None.
1E22-0056 24" PIPE TO FLANGE 24" STD 305-701-103	C-F-2 C5.51	UT	0944-07-E008	NRI	None.
1E22-0087 12" PIPE TO ELBOW 12" 100 305-701-105	C-F-2 C5.51	UT	0944-07-E005	NRI	None.
1E22-C001-008 24" SUCTION FLANGE TO 24" SUCTION PIPE 24" N/A 305-701-114	C-G C6.10	MT	0942-07A-004	SAT	None.
1E22-C001-009 24" SUCTION PIPE TO HEAD SHELL N/A N/A 305-701-114	C-G C6.10	MT	0942-07A-005	SAT	None.
1E22-C001-010 HEAD SHELL TO HEAD COVER N/A N/A 305-701-114	C-G C6.10	MT	0942-07A-006	SAT	None.
1E22-C001-012 24" SUCTION PIPE LONGITUDINAL SEAM N/A N/A 305-701-114	C-G C6.10	MT	0942-07A-007	SAT	None.

ID of Component Examined Description of Component Size - Sched. - ISI Dwg. No.	ASME Category ASME Item No.	Exam Method	Exam Report No.	Status	Remarks
1E22-F026-SEAM 6" GATE VALVE BODY WELD 6" N/A 305-701-114	C-G C6.20	MT	0942-07A-001	SAT	None.
1E22-F036-SEAM 12" GATE VALVE BODY WELD (GROUPING NO. XVIII) 12" N/A 305-701-111	B-M-1 B12.40	UT	0944-07-E124	GEO	Previously recorded geometry noted. No changes observed.
1E22-F036-SEAM 12" GATE VALVE BODY WELD (GROUPING NO. XVIII) 12" N/A 305-701-111	B-M-1 B12.40	UT	0944-07-E123	NRI	None.
1E22-H0005 MECHANICAL SNUBBER 12" N/A 305-701-111	F-A F1.SN	VT-3	VT-07-0120	SAT	None.
1E22-H0006 VARIABLE SPRING 12" N/A 305-701-111	F-A F1.SP	VT-3	1042-07-025	SAT	None.
1E22-H0039 VARIABLE SPRING (WA < .75" T) 24" N/A 305-701-101	F-A F2.SP	VT-3	1042-07-005	SAT	None.
1E22-H0043 RIGID GUIDE 24" N/A 305-701-103	F-A F2.Gs	VT-3	1042-07-009	SAT	None.
1E22-H0057 MECHANICAL SNUBBER 16" N/A 305-701-106	F-A F2.SN	VT-3	VT-07-0045	SAT	None.
1E22-H0063 RIGID STRUT 16" N/A 305-701-107	F-A F2.ST	VT-3	1042-07-001	SAT	None.
1E22-H0085-WA PIPING SUPPORT WELDED ATTACHMENT 12" N/A 305-701-112	C-Cc C3.20	MT	0942-07A-008	SAT	None.

ID of Component Examined Description of Component Size - Sched. - ISI Dwg. No.	ASME Category ASME Item No.	Exam Method	Exam Report No.	Status	Remarks
1E22-H0133 RIGID STRUT (WA) 24" N/A 305-355-101	F-A F3.ST	VT-3	1042-06-023	SAT	None.
1E22-H0133-WA INTEGRAL ATTACHMENT RIGID STRUT 24" N/A 305-355-101	D-Ac D1.20	VT-1	1042-06-022	SAT	Not scheduled for credit, but WA was examined at same time the support was examined.
1E22-S004B-SP AIR RECEIVER TANK (A004B) SUPPORT (WA) N/A N/A 305-351-101	F-A F1.40	VT-3	1042-06-020	SAT	None.
1E22-S004B-WA INTEGRAL ATTACHMT AIR RECEIVER TANK (A004B) SUPPORT N/A N/A 305-351-101	D-Ac D1.10	VT-1	1042-06-019	SAT	None.
1E32-0215 2" SOCKET COUPLING ON VALVE F028A TO PIPE 2" 160 305-605-107	R-A R2.ND	UT	0944-07-E119	NRI	UT of piping base material HAZ.
1E32-0215 2" SOCKET COUPLING ON VALVE F028A TO PIPE 2" 160 305-605-107	R-A R2.ND	VT-1	1042-07-029	NRI	None.
1E32-0215 2" SOCKET COUPLING ON VALVE F028A TO PIPE 2" 160 305-605-107	R-A R2.ND	UT	0944-07-E120	NRI	UT of piping base material HAZ.
1E32-0216 2" PIPE TO ELBOW SOCKET WELD 2" 160 305-605-107	R-A R2.ND	VT-1	1042-07-028	NRI	None.
1E32-0216 2" PIPE TO ELBOW SOCKET WELD 2" 160 305-605-107	R-A R2.ND	UT	0944-07-E117	NRI	UT of piping base material HAZ.
1E32-0216 2" PIPE TO ELBOW SOCKET WELD 2" 160 305-605-107	R-A R2.ND	UT	0944-07-E118	NRI	UT of piping base material HAZ.

ID of Component Examined Description of Component Size - Sched. - ISI Dwg. No.	ASME Category ASME Item No.	Exam Method	Exam Report No.	Status	Remarks
1E51-0039 6" PIPE TO TEE 6" 120 305-631-102	C-F-2 C5.51	UT	0944-07-E006	NRI	None.
1E51-0097 8" X 12" X 12" TEE TO 12" PIPE BEND 12" STD 305-632-103	C-F-2 C5.51	UT	0944-07-E011	NRI	Scans from pipe side of weld.
1E51-0097 8" X 12" X 12" TEE TO 12" PIPE BEND 12" STD 305-632-103	C-F-2 C5.51	UT	0944-07-E012	NRI	Scans from tee side of weld.
1E51-C001-002 RCIC PUMP CASING TO SUCTION NOZZLE 6" N/A 305-631-109	C-G C6.10	PT	0941-07A-001	SAT	One acceptable rounded indication.
1E51-C001-A-WA PUMP SUPPORT WELDED ATTACHMENT N/A N/A 305-631-109	C-Cc C3.30	MT	0942-07A-002	SAT	Only 82.6% coverage due to support assembly
1E51-C001-SP ANCHOR, PUMP (WA) N/A N/A 305-631-109	F-A F1.40	VT-3	1042-07-003	SAT	None.
1E51-F0013-SEAM 6" GATE VALVE BODY WELD (GROUPING NO. XXI) 6" 1.500" 305-631-109	B-M-1 B12.40	UT	0944-07-E002	GEO	94% coverage with 70 deg angle. Previously recorded geometry noted. No changes apparent.
1E51-F0013-SEAM 6" GATE VALVE BODY WELD (GROUPING NO. XXI) 6" 1.500" 305-631-109	B-M-1 B12.40	UT	0944-07-E001	NRI	100% coverage with 45 deg angle.
1E51-F0064-SEAM 10" GATE VALVE BODY WELD (GROUPING NO. XXII) 10" 2.200" 305-632-102	B-M-1 B12.40	UT	0944-07-E122	GEO	94% coverage with 70 deg angle. Previously recorded geometry noted. No changes apparent.
1E51-F0064-SEAM 10" GATE VALVE BODY WELD (GROUPING NO. XXII) 10" 2.200" 305-632-102	B-M-1 B12.40	UT	0944-07-E121	NRI	100% coverage with 45 deg angle.

ID of Component Examined Description of Component Size - Sched. - ISI Dwg. No.	ASME Category ASME Item No.	Exam Method	Exam Report No.	Status	Remarks
1E51-F0066-IS 6"CHECK VALVE INTERNAL SURFACE(GROUPING NO. XXIII) 6" N/A 305-631-108	B-M-2 B12.50	VT-3	1042-07A-024	SAT	Performed valve internal inspection while vavle was apart to replace Kalrez seat. No indications.
1E51-F0502-SEAM 6" GATE VALVE BODY WELD 6" 1.500" 305-631-109	C-G C6.20	MT	0942-07A-003	SAT	None.
1E51-H0056 MECHANICAL SNUBBER (WA < .75" T) 12" N/A 305-632-104	F-A F2.SN	VT-3	VT-07-0042	SAT	None.
1E51-H0141 VARIABLE SPRING 10" N/A 305-632-102	F-A F2.SP	VT-3	1042-07-030	SAT	None.
1E51-H0151 RIGID STRUT 6" N/A 305-631-107	F-A F1.ST	VT-3	1042-07-020	SAT	None.
1E51-P123-SP ANCHOR, PEN TO SHIELD BLDG (WA) 305-631-106	F-A F1.A	VT-3	1042-07-031	SAT	None.
1G33-0063 6" P131 PROCESS PIPE TO PIPE 6" 80 305-671-104	R-A R2.ND	UT	0944-07-E199	NRI	None.
1G33-0064F 6" ELBOW TO PIPE 6" 120 305-671-104	X-B X10.10	UT	0944-07-E200	NRI	None.
1G33-0122 6" X 6" X 6" TEE TO VALVE F051A 6" 120 305-672-101	C-F-2 C5.51	UT	0944-07-E198	NRI	None.
1G33-H0146 MECHANICAL SNUBBER (AUGMENTED HEPIBER) 6" N/A 305-671-104	F-A aug F5.0	VT-3	VT-07-0383	SAT	None.

ID of Component Examined Description of Component Size - Sched. - ISI Dwg. No.	ASME Category ASME Item No.	Exam Method	Exam Report No.	Status	Remarks
1N22-0037 2" PIPE TO 3" X 3" X 2" TEE BUTT WELD 2" 160 305-121-102	R-A R2.11	UT	0944-07-E188	GEO	70° exam.
1N22-0037 2" PIPE TO 3" X 3" X 2" TEE BUTT WELD 2" 160 305-121-102	R-A R2.11	UT	0944-07-E186	NRI	0° Exam.
1N22-0037 2" PIPE TO 3" X 3" X 2" TEE BUTT WELD 2" 160 305-121-102	R-A R2.11	UT	0944-07-E187	NRI	45° exam.
1N22-0067 2" X 3" REDUCER TO 3" PIPE BUTT WELD 3" 160 305-121-101	R-A R2.11	UT	0944-07-E151	NRI	No counterbore observed.
1N22-0067 2" X 3" REDUCER TO 3" PIPE BUTT WELD 3" 160 305-121-101	R-A R2.11	UT	0944-07-E150	NRI	UT of piping base material HAZ.
1N22-0068 3" PIPE TO 3" X 3" X 2" TEE BUTT WELD 3" 160 305-121-101	R-A R2.11	UT	0944-07-E152	NRI	UT of piping base material HAZ.
1N22-0068 3" PIPE TO 3" X 3" X 2" TEE BUTT WELD 3" 160 305-121-101	R-A R2.11	UT	0944-07-E153	NRI	No counterbore observed. Scanned to maintain a 5-20% ID roll.
1N22-0073 3" X 3" X 2" TEE TO 3" PIPE BUTT WELD 3" 160 305-121-103	R-A R2.11	UT	0944-07-E143	NRI	No counterbore observed. Scanned to maintain a 5-20% ID roll.
1N22-0073 3" X 3" X 2" TEE TO 3" PIPE BUTT WELD 3" 160 305-121-103	R-A R2.11	UT	0944-07-E142	NRI	UT of piping base material HAZ.
1N22-0076 3" P423 PROCESS PIPE TO PIPE BUTT WELD 3" 160 305-121-103	R-A R1.11	UT	0944-07-E148	NRI	UT of piping base material HAZ.

ID of Component Examined Description of Component Size - Sched. - ISI Dwg. No.	ASME Category ASME Item No.	Exam Method	Exam Report No.	Status	Remarks
1N22-0076 3" P423 PROCESS PIPE TO PIPE BUTT WELD 3" 160 305-121-103	R-A R1.11	UT	0944-07-E149	GEO	Root geometry observed 360° at varying amplitudes.
1N22-0106 2" PIPE TO ELBOW SOCKET WELD 2" 160 305-121-101	R-A R2.11	UT	0944-07-E145	IND	Spot ind. observed in the second leg outside of exam volume. Scanned to maintain a 5-20% ID roll.
1N22-0106 2" PIPE TO ELBOW SOCKET WELD 2" 160 305-121-101	R-A R2.11	UT	0944-07-E144	NRI	UT of piping base material HAZ.
1N22-0106 2" PIPE TO ELBOW SOCKET WELD 2" 160 305-121-101	R-A R2.11	VT-1	1042-07-089	NRI	None.
1N22-0107 2" ELBOW TO PIPE SOCKET WELD 2" 160 305-121-101	R-A R2.11	UT	0944-07-E146	NRI	UT of piping base material HAZ.
1N22-0107 2" ELBOW TO PIPE SOCKET WELD 2" 160 305-121-101	R-A R2.11	VT-1	1042-07-090	NRI	None.
1N22-0107 2" ELBOW TO PIPE SOCKET WELD 2" 160 305-121-101	R-A R2.11	UT	0944-07-E147	IND	Spot indication observed in the second leg outside of exam volume. Scanned to maintain a 5-20% ID roll.
1N22-0147 2" PIPE TO 3" X 3" X 2" TEE BUTT WELD 2" 160 305-121-102	R-A R2.11	UT	0944-07-E191	GEO	70° exam. 0944-07-E190 (45° S)
1N22-0147 2" PIPE TO 3" X 3" X 2" TEE BUTT WELD 2" 160 305-121-102	R-A R2.11	UT	0944-07-E190	NRI	45° exam.
1N22-0147 2" PIPE TO 3" X 3" X 2" TEE BUTT WELD 2" 160 305-121-102	R-A R2.11	UT	0944-07-E189	NRI	0° exam.

ID of Component Examined Description of Component Size - Sched. - ISI Dwg. No.	ASME Category ASME Item No.	Exam Method	Exam Report No.	Status	Remarks
1N22-H0129 MECHANICAL SNUBBER 2" N/A 305-121-102	F-A F1.SN	VT-3	VT-07-0467	SAT	None.
1N27-H0032 RIGID GUIDE (WA) 20" N/A 305-082-101	F-A F2.G	VT-3	1042-07-027	SAT	VT-1 examination perfomed in lieu of Surface examination in accordance with IR-026.
1N27-H1127 RIGID GUIDE (AUGMENTED HEPIBER) 1-1/2" N/A 305-971-101	F-A aug F5.0	VT-3	1042-07-015	SAT	None.
1N27-H1129 RIGID GUIDE (AUGMENTED HEPIBER) 1-1/2" N/A 305-971-101	F-A aug F5.0	VT-3	1042-07-014	SAT	None.
1P42-H0112 VARIABLE SPRING (WA) 10" N/A 305-621-106	F-A F3.SP	VT-3	1042-06-025	SAT	None.
1P42-H0112-WA INTEGRAL ATTACHMENT VARIABLE SPRING 10" N/A 305-621-106	D-Ac D1.20	VT-1	1042-06-024	SAT	None.
1P42-H0163 RIGID GUIDE 12" N/A 305-621-110	F-A F3.G	VT-3	1042-06-027	SAT	None.
1P42-H0210 ANCHOR (WA) 10" N/A 305-621-103	F-A F3.A	VT-3	1042-06-042	SAT	None.
1P42-H0215 RIGID STRUT 10" N/A 305-621-102	F-A F3.STm	VT-3	1042-06-043	SAT	None.
1P45-D003-SP ANCHOR, FILTER SUPPORT (WA) N/A N/A 305-791-107	F-A F1.40	VT-3	1042-06-039	SAT	None.

ID of Component Examined Description of Component Size - Sched. - ISI Dwg. No.	ASME Category ASME Item No.	Exam Method	Exam Report No.	Status	Remarks
1P45-H0063 RIGID GUIDE 16" N/A 305-792-112	F-A F3.G	VT-3	1042-06-012	SAT	None.
1P45-H0201 RIGID SUPPORT 14" N/A 305-791-113	F-A F3.R	VT-3	1042-06-009	SAT	None.
1P45-H0216 MECHANICAL SNUBBER 24" N/A 305-791-112	F-A F3.SN	VT-3	1042-06-011	SAT	None.
1P45-H0360 RIGID GUIDE 14" N/A 305-792-116	F-A F3.G	VT-3	1042-06-006	SAT	None.
1P45-H0405 RIGID STRUT 8" N/A 305-791-101	F-A F3.ST	VT-3	1042-06-033	SAT	None.
1P45-H0605 RIGID GUIDE 14" N/A 305-791-113	F-A F3.Gs	VT-3	1042-06-014	SAT	None.
1P45-H0683 RIGID ROD 14" N/A 305-792-105	F-A F3.R	VT-3	1042-06-028	SAT	None.
1P45-H5003 RIGID STRUT (WA) 24" N/A 305-791-112	F-A F3.ST	VT-3	1042-06-017	SAT	None.
1P45-H5003-WA INTEGRAL ATTACHMENT RIGID STRUT 24" N/A 305-791-112	D-Ac D1.20	VT-1	1042-06-013	SAT	None.
1P47-H0027 RIGID STRUT 10" N/A 305-002-107	F-A F3.STm	VT-3	1042-06-041	SAT	None.

ID of Component Examined Description of Component Size - Sched. - ISI Dwg. No.	ASME Category ASME Item No.	Exam Method	Exam Report No.	Status	Remarks
1P47-H0031 RIGID SUPPORT (WA) 10" N/A 305-002-103	F-A F3.R	VT-3	1042-06-008	SAT	None.
1P47-H0031-WA INTEGRAL ATTACHMENT RIGID SUPPORT 10" N/A 305-002-103	D-Ac D1.20	VT-1	1042-06-007	SAT	None.
1P47-H0053 RIGID STRUT 10" N/A 305-002-102	F-A F3.ST	VT-3	1042-06-026	SAT	None.
1P47-H0280 RIGID GUIDE 10" N/A 305-002-105	F-A F3.G	VT-3	1042-06-044	SAT	None.
1P47-H0385 RIGID STRUT 8" N/A 305-002-113	F-A F3.STm	VT-3	1042-06-005	SAT	None.
0P49-C002A-SP ANCHOR, SCREEN WASH PUMP (WA) N/A N/A 305-214-101	F-A F1.40	VT-3	1042-06-016	SAT	None.
0P49-C002A-WA INTEGRAL ATTACHMENT SCREEN WASH PUMP ANCHOR N/A N/A 305-214-101	D-Ac D1.30	VT-1	1042-06-015	SAT	None.
1R44-A001A-SP ANCHOR, STARTING AIR RECEIVER TANK (WA) N/A N/A 305-351-102	F-A F1.40	VT-3	1042-06-031	SAT	None.
1R44-A001A-WA INTEGRAL ATTACHMENT STARTING AIR RECEIVER TANK ANC N/A N/A 305-351-102	D-Ac D1.10	VT-1	1042-06-032	SAT	None.
1R45-A003A-SP ANCHOR, FUEL OIL DAY TANK (WA) N/A N/A 305-355-110	F-A F1.40	VT-3	1042-06-051	SAT	None.

ID of Component Examined Description of Component Size - Sched. - ISI Dwg. No.	ASME Category ASME Item No.	Exam Method	Exam Report No.	Status	Remarks
1R45-A003A-WA INTEGRAL ATTACHMENT FUEL OIL DAY TANK ANCHOR N/A N/A 305-355-110	D-Ac D1.10	VT-1	1042-06-050	SAT	None.
1R46-A003A-SP ANCHOR, JACKET WATER STAND PIPE (WA) N/A N/A 305-354-105	F-A F1.40	VT-3	1042-06-029	SAT	None.
1R46-A003A-WA INTEGRAL ATTACHMENT JACKET WATER STAND PIPE ANCHOR N/A N/A 305-354-105	D-Ac D1.10	VT-1	1042-06-030	SAT	None.
1R47-A001A-SP STANDBY DIESEL GENERATOR LUBE OIL TANK ANCHOR (WA) N/A N/A 305-353-103	F-A F1.40	VT-3	1042-06-049	SAT	None.
1R47-A001A-WA INTEGRAL ATTACHMENT LUBE OIL TANK ANCHOR N/A N/A 305-353-103	D-Ac D1.10	VT-1	1042-06-048	SAT	None.
1R48-D001B-SP ANCHOR, STANDBY DIESEL SILENCER (WA) N/A N/A 305-355-104	F-A F1.40	VT-3	1042-06-046	SAT	None.
1R48-D001B-WA INTEGRAL ATTACHMENT STANDBY DIESEL SILENCER ANCHOR N/A N/A 305-355-104	D-Ac D1.20	VT-1	1042-06-045	SAT	None.
1R48-D002B-SP ANCHOR; STANDBY DIESEL SILENCER (WA) N/A N/A 305-355-102	F-A F1.40	VT-3	1042-06-047	SAT	None.
1R48-D003B-SP ANCHOR; STANDBY DIESEL SILENCER (WA) N/A N/A 305-355-102	F-A F1.40	VT-3	1042-06-036	SAT	None.
1R48-D010B-SP ANCHOR; STANDBY DIESEL SILENCER N/A N/A 305-355-106	F-A F1.40	VT-3	1042-06-035	SAT	None.

ID of Component Examined Description of Component Size - Sched. - ISI Dwg. No.	ASME Category ASME Item No.	Exam Method	Exam Report No.	Status	Remarks
1R48-H0022 RIGID GUIDE 24" N/A 305-355-102	F-A F3.G	VT-3	1042-06-034	SAT	None.
1R48-H0027 MECHANICAL SNUBBER (WA) (TANDEM) 36" N/A 305-355-105	F-A F3.SN	VT-3	1042-06-053	SAT	None.
1R48-H0027-WA INTEGRAL ATTACHMENT MECHANICAL SNUBBER 36" N/A 305-355-105	D-Ac D1.20	VT-1	1042-06-052	SAT	None.
1R48-H0033 VARIABLE SPRING 26" N/A 305-355-104	F-A F3.SP	VT-3	1042-06-018	SAT	None.
1R48-PH005 RIGID ROD 6" N/A 305-355-108	F-A F3.R	VT-3	1042-06-021	SAT	None.
2P42-H0026 RIGID STRUT (WA) 12" N/A 305-623-110	F-A F3.ST	VT-3	1042-06-040	SAT	None.
2P42-H0148 RIGID SUPPORT (WA) 10" N/A 305-623-104	F-A F3.R	VT-3	1042-06-038	SAT	None.
2P42-H0148-WA INTEGRAL ATTACHMENT RIGID SUPPORT 10" N/A 305-623-104	D-Ac D1.20	VT-1	1042-06-037	SAT	None.
CLASS 1, PIPING PIPING-SYSTEM LEAKAGE TEST N/A N/A 305-NO-DWG	B-P B15.50	VT-2	1Q800-07-127	SAT	Pressure testing accomplished by various ISI instructions.
CLASS 1, PUMPS PUMPS-SYSTEM LEAKAGE TEST N/A N/A 305-NO-DWG	B-P B15.60	VT-2	1Q800-07-128	SAT	Pressure testing accomplished by various ISI instructions.

ID of Component Examined Description of Component Size - Sched. - ISI Dwg. No.	ASME Category ASME Item No.	Exam Method	Exam Report No.	Status	Remarks
CLASS 1, VALVES VALVES-SYSTEM LEAKAGE TEST N/A N/A 305-NO-DWG	B-P B15.70	VT-2	1Q800-07-129	SAT	Pressure testing accomplished by various ISI instructions.
CLASS 1, PR COMP REACTOR VESSEL-SYSTEM LEAKAGE TEST N/A N/A 305-NO-DWG	B-P B15.10	VT-2	1Q800-07-130	SAT	Pressure testing accomplished by various ISI instructions.
1T23-017-EM CTMT EXT INTERFACE WITH ANNULUS POUR AZ 0-360 N/A N/A 305-503-139	E-C E4.11	VT-1	1042-07-097	SAT	Some surface rust, but no signs of recent moisture intrusion and no significant material loss.
1T23-017-EC ANNULUS CONCRETE SURFACE BENEATH E32 LEAKOFF LINES N/A N/A 305-503-139	L-A L1.12	VT3C	1042-06-0002	SAT	This report addresses "suspect areas" of concrete surface annulus pour @ 340 degrees 598'4" beneath the E32 leakoff line. Area was previously reported on 6/9/99 (rpt 1042-99-104) and 11/13/02 (rpt 1042-02-0013). No increased degradation noted.

Table Notes:

1. Status codes are "SAT" or "UNSAT" for visual and surface examinations. For ultrasonic examinations they are "IND" for indication, "GEO" for geometry, and "NRI" for no recordable indications.
2. The above exam listing is all the inservice examinations that were performed during Cycle 11 or RFO11 in accordance with Perry's Inservice Examination Plan (ISEP).

PERRY NUCLEAR POWER PLANT

PNPP

First Energy Nuclear Operating Company

Perry Nuclear Power Plant

ISI Summary Report No. P0059-0011
Second Interval, Third Period, First Outage
(RFO11)
Cycle 11 and RFO11 Preservice Examinations

Prepared by: _____ Date: 7/13/2007
ISI Engineer

Reviewed by: Thomas H Fogs ANII Date: 7/16/07
Authorized Nuclear Inservice Inspector

ID of Component Examined Description of Component Size - Sched. - ISI Dwg. No.	ASME Category ASME Item No.	Exam Method	Exam Report No.	Status	Remarks
1B21-F041B-B SRV BOLTING, 12 EACH 10" N/A 305-605-102	B-G-2 B7.50	VT-1	1042-07A-0012	SAT	Examined 12 replacement hydro-nuts; heat number 623A.
1B21-F041B-B SRV BOLTING, 12 EACH 10" N/A 305-605-102	B-G-2 B7.50	VT-1	1042-07A-0005	SAT	Examined 12 replacement studs; heat number K745.
1B21-F041D-B SRV BOLTING, 12 EACH 10" N/A 305-605-104	B-G-2 B7.50	VT-1	1042-07A-0006	SAT	Examined 12 replacement studs; heat number K745.
1B21-F041D-B SRV BOLTING, 12 EACH 10" N/A 305-605-104	B-G-2 B7.50	VT-1	1042-07A-0013	SAT	Examined 12 replacement hydro-nuts; heat number 623A.
1B21-F041F-B SRV BOLTING, 12 EACH 10" N/A 305-605-102	B-G-2 B7.50	VT-1	1042-07A-0002	SAT	Examined 12 replacement studs; heat number K745.
1B21-F041F-B SRV BOLTING, 12 EACH 10" N/A 305-605-102	B-G-2 B7.50	VT-1	1042-07A-0020	SAT	Examined 12 replacement hdro-nuts; heat number 623A.
1B21-F041K-B SRV BOLTING, 12 EACH 10" N/A 305-605-102	B-G-2 B7.50	VT-1	1042-07A-0019	SAT	Examined 12 replacement hydro-nuts; heat number 623A.
1B21-F041K-B SRV BOLTING, 12 EACH 10" N/A 305-605-102	B-G-2 B7.50	VT-1	1042-07A-0003	SAT	Examined 12 replacement studs; heat number K745.
1B21-F047B-B SRV BOLTING, 12 EACH 10" N/A 305-605-102	B-G-2 B7.50	VT-1	1042-07A-0009	SAT	Examined 12 replacement studs; heat number K745.
1B21-F047B-B SRV BOLTING, 12 EACH 10" N/A 305-605-102	B-G-2 B7.50	VT-1	1042-07A-0015	SAT	Examined 12 replacement hydro-nuts; heat number 623A.

ID of Component Examined Description of Component Size - Sched. - ISI Dwg. No.	ASME Category ASME Item No.	Exam Method	Exam Report No.	Status	Remarks
1B21-F047D-B SRV BOLTING, 12 EACH 10" N/A 305-605-104	B-G-2 B7.50	VT-1	1042-07A-0004	SAT	Examined 12 replacement studs; heat number K745.
1B21-F047D-B SRV BOLTING, 12 EACH 10" N/A 305-605-104	B-G-2 B7.50	VT-1	1042-07A-0014	SAT	Examined 12 replacement hydro-nuts; heat numbers 590A (6) and 623A (6).
1B21-F047F-B SRV BOLTING, 12 EACH 10" N/A 305-605-102	B-G-2 B7.50	VT-1	1042-07A-0011	SAT	Examined 12 replacement studs; heat numbers K745 (8) and OG84 (4).
1B21-F047F-B SRV BOLTING, 12 EACH 10" N/A 305-605-102	B-G-2 B7.50	VT-1	1042-07A-0021	SAT	Examined 12 replacement hydro-nuts; heat number 590A.
1B21-F047H-B SRV BOLTING, 12 EACH 10" N/A 305-605-104	B-G-2 B7.50	VT-1	1042-07A-0017	SAT	Examined 12 replacement hydro-nuts; heat number 590A.
1B21-F047H-B SRV BOLTING, 12 EACH 10" N/A 305-605-104	B-G-2 B7.50	VT-1	1042-07A-0010	SAT	Examined 12 replacement studs; heat number OG84.
1B21-F051B-B SRV BOLTING, 12 EACH 10" N/A 305-605-102	B-G-2 B7.50	VT-1	1042-07A-0008	SAT	Examined 12 replacement studs; heat number OG84.
1B21-F051B-B SRV BOLTING, 12 EACH 10" N/A 305-605-102	B-G-2 B7.50	VT-1	1042-07A-0018	SAT	Examined 12 replacement hydro-nuts; heat number 590A.
1B21-F051D-B SRV BOLTING, 12 EACH 10" N/A 305-605-104	B-G-2 B7.50	VT-1	1042-07A-0007	SAT	Examined 12 replacement studs; heat number OG84.
1B21-F051D-B SRV BOLTING, 12 EACH 10" N/A 305-605-104	B-G-2 B7.50	VT-1	1042-07A-0016	SAT	Examined 12 replacement hydro-nuts; heat number 590A.

ID of Component Examined Description of Component Size - Sched. - ISI Dwg. No.	ASME Category ASME Item No.	Exam Method	Exam Report No.	Status	Remarks
1B21-H0445 HYDRAULIC SNUBBER 2" N/A 305-605-106	F-A F1.SN	VT-3	VT-07-0639	SAT	Preservice exam of replacement snubber Serial No. 04616533/10
1B21-H0449 HYDRAULIC SNUBBER 2" N/A 305-605-106	F-A F1.SN	VT-3	VT-07-0642	SAT	Preservice exam of replacement snubber Serial No. 04616533/017
1B21-H0450 HYDRAULIC SNUBBER 2" N/A 305-605-106	F-A F1.SN	VT-3	VT-07-0640	SAT	Preservice exam of replacement snubber Serial No. 03615883/020
1B21-H0471 HYDRAULIC SNUBBER 2" N/A 305-605-106	F-A F1.SN	VT-3	VT-07-0641	SAT	Preservice exam of replacement snubber Serial No. 30400009/017
1B21-S107C HYDRAULIC SNUBBER MPL 1B21G7091 26" N/A 305-605-103	F-A F1.SN	VT-3	VT-07-0531	SAT	Preservice exam of replacement snubber Ser No. 043.
1B33-S369B HYDRAULIC SNUBBER, PUMP MOTOR, MPL 1B33G7064B N/A N/A 305-602-104	F-A F1.40	VT-3	VT-07-0545	SAT	Preservice exam of replacement snubber Ser No. 057.
1B33-S370B HYDRAULIC SNUBBER, PUMP MOTOR, MPL 1B33G7065B N/A N/A 305-602-104	F-A F1.40	VT-3	VT-07-0581	SAT	Preservice exam of replacement snubber Ser No. 063.
1B33-S371B HYDRAULIC SNUBBER, PUMP MOTOR, MPL 1B33G7066B N/A N/A 305-602-104	F-A F1.40	VT-3	VT-07-0532	SAT	Preservice exam of replacement snubber Ser No. 026.
1E12-H5002 MECHANICAL SNUBBER 12" N/A 305-642-138	F-A F2.SN	VT-3	VT-07-0019	SAT	Preservice exam of replacement snubber Ser No. 42858
1E51-H0073 HYDRAULIC SNUBBER 6" N/A 305-631-108	F-A F1.SN	VT-3	VT-07-0643	SAT	Preservice exam of replacement snubber Ser No. 04616533/011

ID of Component Examined Description of Component Size - Sched. - ISI Dwg. No.	ASME Category ASME Item No.	Exam Method	Exam Report No.	Status	Remarks
1E51-H0074 HYDRAULIC SNUBBER 6" N/A 305-631-108	F-A F1.SN	VT-3	VT-07-0644	SAT	Preservice exam of replacement snubber Ser No. 04616533/001
1G33-H0144 MECHANICAL SNUBBER (AUGMENTED HEPIBER) 6" N/A 305-671-104	F-A aug F5.0	VT-3	VT-07-0631	SAT	Preservice exam of replacement snubber Ser No. 27529.
1G41-H0051 MECHANICAL SNUBBER 10" N/A 305-655-107	F-A F3.SN	VT-3	VT-07-0026	SAT	Preservice exam of replacement snubber Ser No. 26019.

Table Notes:

1. Status codes are "SAT" or "UNSAT" for visual and surface examinations. For ultrasonic examinations they are "IND" for indication, "GEO" for geometry, and "NRI" for no recordable indications.
2. The above exam listing is all the preservice examinations that were performed during Cycle 11 or RFO11 due to repair, replacement, or modification activities.

APPENDIX B

"CYCLE 11 & RFO11 NIS-2/NR-1 FORMS"

INSERVICE INSPECTION SUMMARY REPORT

FOR

PERRY NUCLEAR POWER PLANT

(PNPP)

UNIT 1

1B13-052

NIS-2/NR-1 OWNER'S REPORT FOR REPAIRS OR REPLACEMENTS

As required by the Provisions of the ASME Code Section XI

PNPP No. 9308 Rev. 9/11/00 NQI-1741

1. Owner: FIRSTENERGY CORP. Date 5/9/07
   10 Center Road, Perry, Ohio 44081 Sheet 1 of 31

2. Plant: Perry Nuclear Power Plant (PNPP) Unit 1
   10 Center Road, Perry, Ohio 44081 see attached chart
   (Repair Org. P.O. No., etc.)

3. Work Performed By: FIRSTENERGY Nuclear Operating Company PNPP Type Code Symbol Stamp NR
   10 Center Road, Perry, Ohio 44081 Authorization No. 33
   Expiration Date 9/28/08

4. Identification of System: 1B13 Reactor and Internals

5. (a) Applicable Construction Code: ASME SECTION III CLASS 1 (NAME/SECTION/DIVISION/CLASS), 1974 Edition

   WINTER 19 75 Addenda Code Case(s) N207, 1361-2, 1728, 1644-4, N272

   (b) Construction Code used for repairs, modifications, or replacements: 1974 (Edition) W75 (Addenda) NA (Code Case(s))

   (c) ASME Code Section XI applicable for Inservice Inspection: 1989 (Edition) NONE (Addenda) N/A (Code Case(s))

   (d) Applicable Edition of Section XI Utilized for Repairs, Modification, or Replacements:

   19 89, _____ 19 N/A Addenda N/A (Code Case(s))

   (e) Design Responsibilities First Energy Corp

6. Identification of Components Repaired, Modified, or Replacement Components

Name of Component	Name of Manufacturer	Manufacturer Serial No.	Nat. Board No.	Other ID.	Year Built	Repair, Replacement, or Modification	ASME Code Stamped
PIPING SYSTEM	GENERAL ELECTRIC	1B13	64077	1B13D008	1984	REPLACEMENT	YES

7. Description of Work: Replaced 14 control rod drives and 1" cap screws see attachment for details.

8. Test Conducted: Hydrostatic- ☐ Pneumatic- ☐ Nominal Operating Pressure- ☒ Other- ☐
   Pressure 1032 psi Test Temperature 142 degrees F Code Case(s) N/A

NIS-2/NR-1 OWNER'S REPORT FOR REPAIRS OR REPLACEMENTS (Back)

PNPP No. 9308 Rev. 9/11/00 NQI-1741

9. Remarks:

NO NAMEPLATE/STAMPING PERFORMED DUE TO THE INTERFACE CONTROLS OF RA-2370 BEING IN EFFECT AND JURISDICTIONAL AUTHORITY CONCURRENCE HAVING BEEN RECEIVED.

Note: Attach all applicable Manufacturer's Data Reports. Supplemental sheets such as lists, sketches, or drawings may be used, provided (1) size is 8 1/2 in. x 11 in., (2) information in items 1 through 6 of this report is included on each sheet, and (3) each sheet is numbered and the number of sheets is recorded on the front of this form.

CERTIFICATE OF COMPLIANCE

I, Michael J Tepsick, certify that to the best of my knowledge and belief the statements made in this report are correct and the repair, modification or replacement of the items described above conforms to Section XI of the ASME Code and to the National Board Inspection Code "NR" rules.

National Board Certificate of Authorization No. 33 to use the "NR stamp expires 28 Sept., 20 08

Date 9 may, 20 07 Signed FENOC-PNPP (name of repair organization) (authorized representative) QC Tech. (title)

CERTIFICATE OF INSPECTION/INSERVICE INSPECTION

I, Thomas G Laps, holding a valid commission issued by The National Board of Boiler and Pressure Vessel Inspectors and certificate of competency issued by the jurisdiction of OHIO and employed by HSB CT. of Hartford, Conn. have inspected the repair, modification or replacement described in this report on MAY 10, 20 07 and state that to the best of my knowledge and belief, this repair, modification or replacement has been completed in accordance with Section XI of the ASME Code and the National Board Inspection Code "NR" rules.

By signing this certificate, neither the undersigned nor my employer makes any warranty, expressed or implied, concerning the work described in this report. Furthermore, neither the undersigned nor my employer shall be liable in any manner for any personal injury, property damage or loss of any kind arising from or connected with this inspection.

Date 5/10, 20 07 Signed (inspector) Commissions NB 9330 "N" "I" "A" Ohio Comm. (National Board (include endorsements), and jurisdiction, and no.)

1. Owner: FIRSTENERGY CORP
10 CENTER ROAD, PERRY, OH 44081

2. Plant: Perry Nuclear Power Plant (PNPP)
10 Center Road, Perry, Ohio 44081

Unit one
WO # See below.
(Repair Org P.O. No., etc.)

3. Work Performed By: FIRSTENERGY NUCLEAR OPERATING COMPANY (PNPP)
10 Center Road, Perry, Ohio 44081

Type Code Symbol Stamp NR
Authorization No. 33
Expiration Date 9/28/08

4. Identification of System: 1B13 REACTOR AND INTERNALS

5. (a) Applicable Construction Code: ASME SECTION III NB ,1974 Edition
WINTER 19 75 Addenda Code Case(s) N207,1361-2,1728,1644-4,N272

(b) Applicable Edition of Section XI Utilized for Repairs or Replacements: 1989 , 19 NO Addenda

6. Identification of Components Repaired, Modified, or Replacement Components

WO NUMBER	CORE LOCATION	NEW CRDM S/N	NUMBER OF CAPSCREWS REPLACED	HT NUMBERS OF NEW CAPSCREWS
200079521	22-27	A5054	8	R707
200079533	46-27	A5510	8	TRR
200079535	50-19	A4531	8	TRR
200079530	42-15	A3730	8	R707
200079527	34-47	A5472	8	R707
200079526	42-51	A5183	8	TRR
200010200	50-23	A5427	8	255A
200079532	46-15	A3895	8	TRR
200195248	42-27	A5122	8	R707
200079534	46-43	A5684	8	TRR
200195247	54-23	A2571	8	TRR
200195249	42-39	A3498	8	(1) TRR (6) 13358 (1) R707
200079515	10-35	A4502	8	(7)255A (1)R707
200174378	42-31	N/A	8	255A
200079536	50-27	N/A	8	R707
200174377	14-19	N/A	8	R707
200174379	26-35	N/A	8	TRR
200260599	50-31	A5416	0	N/A
200079537	50-31	N/A	8	TRR

4 of 35 31

Sheet 1 of 2

FORM N-2 NPT CERTIFICATE HOLDERS' DATA REPORT FOR NUCLEAR PART AND APPURTENANCES*

As required by the Provision of the ASME Code Rules, Section III, Div. 1

1. (a) Manufactured by General Electric Company, Castle Hayne Rd., Wilmington, N.C.
(Name and address of NPT Certificate Holder)

(b) Manufactured for General Electric Company, San Jose, California (NEBG)
(Name and address of N Certificate Holder for completed nuclear component)

2. Identification-Certificate Holder's Serial No. of Part A5416 Nat'l Bd. No.

(a) Constructed According to Drawing No. 768E534G001 Drawing Prepared by D. L. Paterson

(b) Description of Part Inspected Control Rod Drive, Model #7RDB144DG001

(c) Applicable ASME Code: Section III, Edition 1974, Addenda date W'75, Case No. N207 1361-2 Class 1

3. Remarks: Standard part for use with Reactor. Hydrostatically tested at 1820 psi.
(Brief description of service for which component was designed)

* Total number of sheets - 2

We certify that the statements made in this report are correct and this vessel part or appurtenance as defined in the Code conforms to the rules of construction of the ASME Code Section III.
(The applicable Design Specification and Stress Report are not the responsibility of the NPT Certificate Holder for parts. An NPT Certificate Holder for appurtenances is responsible for furnishing a separate Design Specification and Stress Report if the appurtenance is not included in the component Design Specification and Stress Report.)

Date 8/26/ 19 81 Signed GE, NEPD-WMD By [signature]
(NPT Certificate Holder)

Certificate of Authorization Expires September 15, 1981 Certificate of Authorization No. NPT N-1151

CERTIFICATION OF DESIGN FOR APPURTENANCE (when applicable)

Design information on file at GE, NEPD-WMD-OA, Castle Hayne Rd., Wilmington, N.C.
22A5556, Rev. 2

Stress analysis report on file at GE, NEPD, San Jose, Calif.
22A4912, Rev. 2

Design specifications certified by B. N. Sridhar Prof. Eng. State Calif Reg. No. 18345

Stress analysis report certified by B. N. Sridhar Prof. Eng. State Calif Reg. No. 18345

CERTIFICATE OF SHOP INSPECTION

I, the undersigned, holding a valid commission issued by the National Board of Boiler and Pressure Vessel Inspectors and/or the State or Province of North Carolina and employed by Department of Labor of State of North Carolina have inspected the part of [illegible]ure vessel described in this Partial Data Report on 8/26/ 19 8[illegible] [illegible]hat to the best of my knowledge and belief, the NPT Certificate Holder has constructed this part in accordance with the AS[illegible] [illegible]e Section III.

By signing this certificate, neither the Inspector nor his employer makes any warranty, expressed or implied, concerning the part described in this Partial Data Report. Furthermore, neither the Inspector nor his employer shall be liable in any manner for any personal injury or property damage or a loss of any kind arising from or connected with this inspection.

Date 8/26/ 19 81

[signature]
Inspector's Signature

Commissions N.C. 723, PA.WC1766, OHIO
National Board, State, Province and No.

00788

*Supplemental sheets in form of lists, sketches or drawings may be used provided (1) size is 8½" x 11", (2) information in Items 1-2 on this Data Report is included on each sheet, and (3) each sheet is numbered and number of sheets is recorded in Item 3, "Remarks"

(10/77) This form (E00040) may be obtained from the Order Dept., ASME, 345 E. 47th St., New York, N.Y. 10017

FORM N-2 (back)

Items 4–8 incl. to be completed for single wall vessels, jackets of jacketed vessels, or shells of heat exchangers.

4. Shell: Material _____ (Kind & Spec. No.) T.S. _____ (Min. or Range Specified) Nominal Thickness ___ in. Corrosion Allowance ___ in. Dia. ___ ft. ___ in. Length ___ ft. ___ in.

5. Seams: Long _____ H.T.[1] _____ R.T. _____ Efficiency _____ %

Girth _____ H.T.[1] _____ R.T. _____ No. of Courses _____

6. Heads: (a) Material _____ T.S. _____ (b) Material _____ T.S. _____

Location (Top, bottom, ends)	Thickness	Crown Radius	Knuckle Radius	Elliptical Ratio	Conical Apex Angle	Hemispherical Radius	Flat Diameter	Side to Press. (Conv. or Conc.)
(a)								
(b)								

If removable, bolts used _____ (Material, Spec. No., T.S., Size, Number) Other fastening _____ (Describe or attach sketch)

7. Jacket Closure: _____ (Describe as ogee end weld, bar, etc. If bar give dimensions, if bolted, describe or sketch)

8. Design pressure[2] 1250 psi at 575 °F

Drop Weight _____
Charpy Impact _____ ft-lb
at temp. of _____ °F

Items 9 and 10 to be completed for tube sections

9. Tube Sheets: Stationary. Material _____ (Kind & Spec. No.) Dia. _____ (Subject to pressure) Thickness ___ in. Attachment _____ (Welded, Bolted)

Floating. Material _____ Dia. _____ Thickness ___ in. Attachment _____

10. Tubes: Material _____ O.D. ___ in. Thickness _____ inches or gage. Number _____ Type _____ (Str. or U)

Items 11–14 incl. to be completed for inner chambers of jacketed vessels, or channels of heat exchangers.

11. Shell: Material _____ (Kind & Spec. No.) T.S. _____ (Min. or Range Specified) Nominal Thickness ___ in. Corrosion Allowance ___ in. Dia. ___ ft. ___ in. Length ___ ft. ___ in.

12. Seams: Long _____ H.T.[1] _____ R.T. _____ Efficiency _____ %

Girth _____ H.T.[1] _____ R.T. _____ No. of Courses _____

13. Heads (a) Material _____ T.S. _____ (b) Material _____ T.S. _____

Location	Thickness	Crown Radius	Knuckle Radius	Elliptical Ratio	Conical Apex Angle	Hemispherical Radius	Flat Diameter	Side to Press (Conv. or Conc
(a) Top, bottom, ends								
(b) Channel								

If removable, bolts used (a) _____ (b) _____ (c) _____ Other fastening _____ (Describe or attach sketch)

14. Design pressure[2] _____ psi at _____ °F

Drop Weight _____
Charpy Impact _____ ft-
at temp. of _____ °

Items below to be completed for all vessels where applicable.

15. Safety Valve Outlets: Number _____ Size _____ Location _____

16. Nozzles:

Purpose (Inlet, Outlet, Drain)	Number	Dia. or Size	Type	Material	Thickness	Reinforcement Material	How Attache

17. Inspection Openings: Manholes, No. _____ Size _____ Location _____
Handholes, No. _____ Size _____ Location _____
Threaded, No. _____ Size _____ Location _____

18. Supports: Skirt _____ (Yes or No) Lugs _____ (Number) Legs _____ (Number) Other _____ (Describe) Attached _____ (Where & How)

[1] If Postweld Heat-Treated.
[2] List other internal or external pressure with coincident temperature when applicable.

5 OF ~~35~~ 31

Sheet 2 of 2

FORM N-2 NPT CERTIFICATE HOLDERS' DATA REPORT FOR NUCLEAR PART AND APPURTENANCES*

As required by the Provision of the ASME Code Rules, Section III, Div. 1

1. (a) Manufactured by General Electric Company, Castle Hayne Rd., Wilmington, N.C.
(Name and address of NPT Certificate Holder)

(b) Manufactured for General Electric Company, San Jose, California (NEEG)
(Name and address of N Certificate Holder for completed nuclear component)

2. Identification-Certificate Holder's Serial No. of Part A5416 Nat'l Bd. No.

(a) Constructed According to Drawing No. 768E534G001 Drawing Prepared by D. L. Paterson

(b) Description of Part Inspected Control Rod Drive, Model #7RDB144DG001

(c) Applicable ASME Code: Section III, Edition 1974, Addenda date W'75, Case No. N207 1361-2 Class 1

1. Cap 166B9274P1
(167A2343)
SA182 - F316
3/8 thick x 1 1/16 OD

2. Indicator Pipe 166B9313P1
SA312-TP316
3/4 sch 40 seamless pipe
0.113 wall thickness
1.065 max. dia.

3. Plug 159A1176P1
SA182-F304
1/4 thick x 0.812 OD

4. Flange 919D610P1 (719E474)
SA182-F304
3.37 thick x 9 5/8 OD
neck 1 1/16 thick x 5.0 OD
2.875 ID

5. Base 137C5311P1
XM-19 ASME SA479
3.0 OD x .884 ID

6. Ring Flange 11485122P2
SA182-F304
1" thick x 5.0 OD x 1.75 ID

7. Cap Screw 117C4516P2
SA193-B6
6 ea. 1/2 dia. on 4 1/8 bolt circle

8. Plug 175A7961P1
SA182-F304
0.38 thick x 1.307 dia.

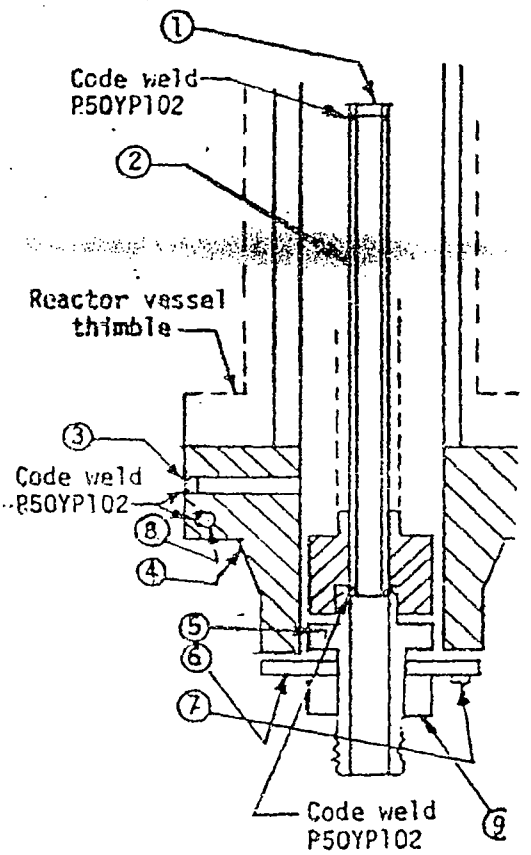

CONTROL ROD DRIVE
DWG - 768E534

9. Nut 137C5934P1
XM-19 SA479
1.30 thick x 2.62 dia.

007

FORM N-2 NPT CERTIFICATE HOLDERS' DATA REPORT FOR NUCLEAR PART AND APPURTENANCES*

As required by the Provision of the ASME Code Rules, Section III, Div. 1

1. (a) Manufactured by General Electric Company, Castle Hayne Rd., Wilmington, N.C.
(Name and address of NPT Certificate Holder)

(b) Manufactured for General Electric Company, San Jose, California (NEBG)
(Name and address of N Certificate Holder for completed nuclear component)

2. Identification-Certificate Holder's Serial No. of Part A3730 Nat'l Bd. No.

(a) Constructed According to Drawing No. 768E534G001 Drawing Prepared by D. L. Peterson

(b) Description of Part Inspected Control Rod Drive, Model #7RDB144DG001

(c) Applicable ASME Code: Section III, Edition 1974, Addenda date W'75, Case No. N207 1361-2 Class 1

3. Remarks: Standard part for use with Reactor. Hydrostatically tested at 1820 psi.
(Brief description of service for which component was designed)

* Total number of sheets - 2

We certify that the statements made in this report are correct and this vessel part or appurtenance as defined in the Code conforms to the rules of construction of the ASME Code Section III.
(The applicable Design Specification and Stress Report are not the responsibility of the NPT Certificate Holder for parts. An NPT Certificate Holder for appurtenances is responsible for furnishing a separate Design Specification and Stress Report if the appurtenance is not included in the component Design Specification and Stress Report.)

Date 7-11 19 80 Signed GE, NEPD-WMD-QA By J. Stoudemire
(NPT Certificate Holder)

Certificate of Authorization Expires June 16, 1981 Certificate of Authorization No. NPT N-1151

CERTIFICATION OF DESIGN FOR APPURTENANCE (when applicable)

Design information on file at GE, NEPD-WMD-QA, Castle Hayne Rd., Wilmington, N.C.
22A5556, Rev. 1

Stress analysis report on file at GE, NEPD-WMD-QA, Castle Hayne Rd., Wilmington, N.C.
22A4912, Rev. 2

Design specifications certified by B. N. Sridhar Prof. Eng. State Calif Reg. No. 18345

Stress analysis report certified by B. N. Sridhar Prof. Eng. State Calif Reg. No. 18345

CERTIFICATE OF SHOP INSPECTION

I, the undersigned, holding a valid commission issued by the National Board of Boiler and Pressure Vessel Inspectors and/or the State or Province of North Carolina and employed by Department of Labor of State of North Carolina have inspected the part of a pressure vessel described in this Partial Data Report on 7-11 19 80, and state that to the best of my knowledge and belief, the NPT Certificate Holder has constructed this part in accordance with the ASME Code Section III.

By signing this certificate, neither the Inspector nor his employer makes any warranty, expressed or implied, concerning the part described in this Partial Data Report. Furthermore, neither the Inspector nor his employer shall be liable in any manner for any personal injury or property damage or a loss of any kind arising from or connected with this inspection.

Date 7-11 19 80

J. E. Thomas
Inspector's Signature

Commissions NC 779, PA.WC2L60, OHIO
National Board, State, Province and No.

* Supplemental sheets in form of lists, sketches or drawings may be used provided (1) size is 8½" x 11", (2) information in items 1-2 on this Data Report is included on each sheet, and (3) each sheet is numbered and number of sheets is recorded in item 3, "Remarks".

(10/77) This form (E00040) may be obtained from the Order Dept., ASME, 345 E. 47th St. New York, N.Y. 10017

FORM N-2 (back)

Items 4–8 Incl. to be completed for single wall vessels, jackets of jacketed vessels, or shells of heat exchangers.

4. Shell: Material ____ ____ T.S. ____ Nominal Thickness ____ in. Corrosion Allowance ____ in. Dia. ____ ft. ____ in. Length ____ ft. ____ in.
(Kind & Spec. No.) (Min. of Range Specified)

5. Seams: Long ____ H.T.[1] ____ R.T. ____ Efficiency ____ %

Girth ____ H.T.[1] ____ R.T. ____ No. of Courses ____

6. Heads: (a) Material ____ T.S. ____ (b) Material ____ T.S. ____

Location (Top, bottom, ends)	Thickness	Crown Radius	Knuckle Radius	Elliptical Ratio	Conical Apex Angle	Hemispherical Radius	Flat Diameter	Side to Press. (Conv. or Conc.)
(a)								
(b)								

If removable, bolts used ____ (Material, Spec. No., T.S., Size, Number) Other fastening ____ (Describe or attach sketch)

7. Jacket Closure: ____
(Describe as ogee and weld, bar, etc. If bar give dimensions, if bolted, describe or sketch)

8. Design pressure[2] 1250 psi at 575 °F

Drop Weight ____
Charpy Impact ____ ft-lb
at temp. of ____ °F

Items 9 and 10 to be completed for tube sections

9. Tube Sheets: Stationary. Material ____ (Kind & Spec. No.) Dia. ____ (Subject to pressure) Thickness ____ in. Attachment ____ (Welded, Bolted)

Floating. Material ____ Dia. ____ Thickness ____ in. Attachment ____

10. Tubes: Material ____ O.D. ____ in. Thickness ____ inches or gage. Number ____ Type ____ (Str. or U)

Items 11–14 incl. to be completed for inner chambers of jacketed vessels, or channels of heat exchangers.

11. Shell: Material ____ T.S. ____ Nominal Thickness ____ in. Corrosion Allowance ____ in. Dia. ____ ft. ____ in. Length ____ ft. ____ in.
(Kind & Spec. No.) (Min. of Range Specified)

12. Seams: Long ____ H.T.[1] ____ R.T. ____ Efficiency ____ %

Girth ____ H.T.[1] ____ R.T. ____ No. of Courses ____

13. Heads (a) Material ____ T.S. ____ (b) Material ____ T.S. ____

Location	Thickness	Crown Radius	Knuckle Radius	Elliptical Ratio	Conical Apex Angle	Hemispherical Radius	Flat Diameter	Side to Press. (Conv. or Conc.)
(a) Top, bottom, ends								
(b) Channel								

If removable, bolts used (a) ____ (b) ____ (c) ____ Other fastening ____ (Describe or attach sketch)

14. Design pressure[2] ____ psi at ____ °F

Drop Weight ____
Charpy Impact ____ ft-lb
at temp. of ____ °F

Items below to be completed for all vessels where applicable.

15. Safety Valve Outlets: Number ____ Size ____ Location ____

16. Nozzles:

Purpose (Inlet, Outlet, Drain)	Number	Dia. or Size	Type	Material	Thickness	Reinforcement Material	How Attached

17. Inspection Openings: Manholes, No. ____ Size ____ Location ____
Handholes, No. ____ Size ____ Location ____
Threaded, No. ____ Size ____ Location ____

18. Supports: Skirt ____ (Yes or No) Lugs ____ (Number) Legs ____ (Number) Other ____ (Describe) Attached ____ (Where & How)

[1] If Postweld Heat-Treated.
[2] List other internal or external pressure with coincident temperature when applicable.

FORM N-2 NPT CERTIFICATE HOLDERS' DATA REPORT FOR NUCLEAR PART AND APPURTENANCES*

As required by the Provision of the ASME Code Rules, Section III, Div. 1

1. (a) Manufactured by General Electric Company, Castle Hayne Rd., Wilmington, N.C.
(Name and address of NPT Certificate Holder)

(b) Manufactured for General Electric Company, San Jose, California (NEBG)
(Name and address of N Certificate Holder for completed nuclear component)

2. Identification-Certificate Holder's Serial No. of Part A3730 Nat'l Bd. No.

(a) Constructed According to Drawing No. 768E534G001 Drawing Prepared by D. L. Peterson

(b) Description of Part Inspected Control Rod Drive, Model #7RDB144DG001

(c) Applicable ASME Code: Section III, Edition 1974, Addenda date W'75, Case No. N207 1361-2 Class 1

1. Cap 166B9274P1
(167A2343)
SA182 - F316
3/8 thick x 1 1/16 OD

2. Indicator Pipe 166B9313P1
SA312-TP316
3/4 sch 40-seamless pipe
0.113 wall thickness
1.065 max. dia.

3. Plug 159A1176P1
SA182-F304
1/4 thick x 0.812 OD

4. Flange 919D610P1 (719E474)
SA182-F304
3.37 thick x 9 5/8 OD
neck 1 1/16 thick x 5.0 OD
2.875 ID

5. Base 137C5311P1
XM-19 ASME SA479
3.0 OD x .884 ID

6. Ring Flange 114B5122P2
SA182-F304
1" thick x 5.0 OD x 1.75 ID

7. Cap Screw 117C4516P2
SA193-B6
6 ea. 1/2 dia. on 4 1/8 bolt circle

8. Plug 175A7961P1
SA182-F304
0.38 thick x 1.307 dia.

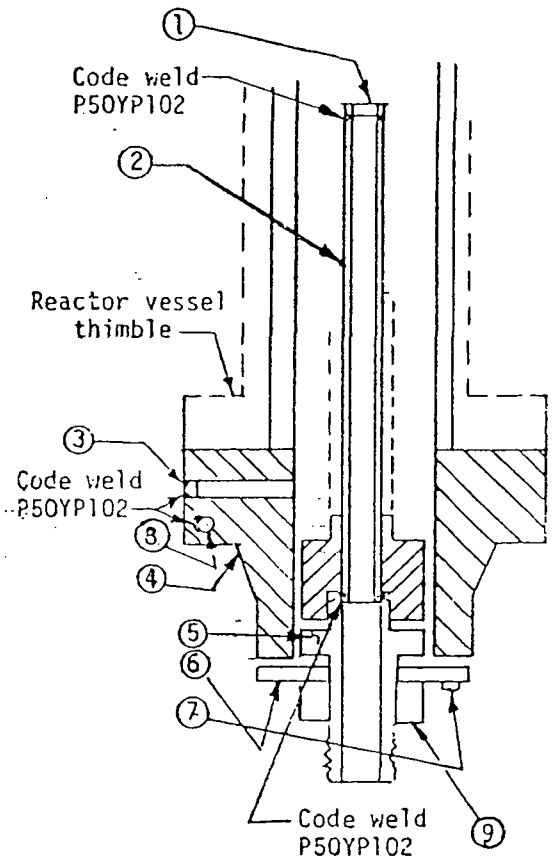

CONTROL ROD DRIVE
DWG - 768E534

9. Nut 137C5934P1
XM-19 SA479
1.30 thick x 2.62 dia.

FORM N-2 NPT CERTIFICATE HOLDERS' DATA REPORT FOR NUCLEAR PART AND APPURTENANCES*

As required by the Provision of the ASME Code Rules, Section III, Div. 1

1. (a) Manufactured by General Electric Company, Castle Hayne Rd., Wilmington, N.C.
(Name and address of NPT Certificate Holder)

(b) Manufactured for General Electric Company, San Jose, California (NEBG)
(Name and address of N Certificate Holder for completed nuclear component)

2. Identification-Certificate Holder's Serial No. of Part A3498 Nat'l Bd. No.

(a) Constructed According to Drawing No. 768E534G001 Drawing Prepared by D. L. Peterson

(b) Description of Part Inspected Control Rod Drive, Model #7RDB144DG001

(c) Applicable ASME Code: Section III, Edition 1974, Addenda date W'75, Case No. N207 1361-2 Class 1

3. Remarks: Standard part for use with Reactor. Hydrostatically tested at 1820 psi.
(Brief description of service for which component was designed)

* Total number of sheets - 2

We certify that the statements made in this report are correct and this vessel part or appurtenance as defined in the Code conforms to the rules of construction of the ASME Code Section III.
(The applicable Design Specification and Stress Report are not the responsibility of the NPT Certificate Holder for parts. An NPT Certificate Holder for appurtenances is responsible for furnishing a separate Design Specification and Stress Report if the appurtenance is not included in the component Design Specification and Stress Report.)

Date 7-11 19 80 Signed GE, NEPD-WMD-QA By J. Stoudenmire
(NPT Certificate Holder)

Certificate of Authorization Expires June 16, 1981 Certificate of Authorization No. NPT N-1151

CERTIFICATION OF DESIGN FOR APPURTENANCE (when applicable)

Design information on file at GE, NEPD-WMD-QA, Castle Hayne Rd., Wilmington, N.C.
22A5556, Rev. 1

Stress analysis report on file at GE, NEPD-WMD-QA, Castle Hayne Rd., Wilmington, N.C.
22A4912, Rev. 2

Design specifications certified by B. N. Sridhar Prof. Eng. State Calif Reg. No. 18345

Stress analysis report certified by B. N. Sridhar Prof. Eng. State Calif Reg. No. 18345

CERTIFICATE OF SHOP INSPECTION

I, the undersigned, holding a valid commission issued by the National Board of Boiler and Pressure Vessel Inspectors and/or the State or Province of North Carolina and employed by Department of Labor of State of North Carolina have inspected the part of a pressure vessel described in this Partial Data Report on 7-11 19 80, and state that to the best of my knowledge and belief, the NPT Certificate Holder has constructed this part in accordance with the ASME Code Section III.

By signing this certificate, neither the Inspector nor his employer makes any warranty, expressed or implied, concerning the part described in this Partial Data Report. Furthermore, neither the Inspector nor his employer shall be liable in any manner for any personal injury or property damage or a loss of any kind arising from or connected with this inspection.

Date 7-11 19 80

E. R. Merrill
Inspector's Signature

Commissions NC 723, PA WC1766, OHIO.
National Board, State, Province and No.

*Supplemental sheets in form of lists, sketches or drawings may be used provided (1) size is 8½" x 11", (2) information in items 1-2 on this Data Report is included on each sheet, and (3) each sheet is numbered and number of sheets is recorded in item 3, "Remarks"

(10/77) This form (E00040) may be obtained from the Order Dept., ASME, 345 E. 47th St., New York, N.Y. 10017

FORM N-2 (back)

Items 4–8 incl. to be completed for single wall vessels, jackets of jacketed vessels, or shells of heat exchangers.

4. Shell: Material ____ (Kind & Spec. No.) ____ T.S. ____ (Min. of Range Specified) Nominal Thickness ____ in. Corrosion Allowance ____ in. Dia. ____ ft. ____ in. Length ____ ft. ____ in.

5. Seams: Long ____ H.T.[1] ____ R.T. ____ Efficiency ____ %

   Girth ____ H.T.[1] ____ R.T. ____ No. of Courses ____

6. Heads: (a) Material ____ T.S. ____ (b) Material ____ T.S. ____

Location (Top, bottom, ends)	Thickness	Crown Radius	Knuckle Radius	Elliptical Ratio	Conical Apex Angle	Hemispherical Radius	Flat Diameter	Side to Press. (Conv. or Conc.)
(a)								
(b)								

If removable, bolts used ____ (Material, Spec. No., T.S., Size, Number) Other fastening ____ (Describe or attach sketch)

7. Jacket Closure: ____ (Describe as ogee and weld, bar, etc. If bar give dimensions, if bolted, describe or sketch)

8. Design pressure[2] 1250 psi at 575 °F

   Drop Weight ____
   Charpy Impact ____ ft-lb at temp. of ____ °F

Items 9 and 10 to be completed for tube sections

9. Tube Sheets: Stationary. Material ____ (Kind & Spec. No.) Dia. ____ (Subject to pressure) Thickness ____ in. Attachment ____ (Welded, Bolted)

   Floating. Material ____ Dia. ____ Thickness ____ in. Attachment ____

10. Tubes: Material ____ O.D. ____ in. Thickness ____ inches or gage. Number ____ Type ____ (Str. or U)

Items 11–14 incl. to be completed for inner chambers of jacketed vessels, or channels of heat exchangers.

11. Shell: Material ____ (Kind & Spec. No.) T.S. ____ (Min. of Range Specified) Nominal Thickness ____ in. Corrosion Allowance ____ in. Dia. ____ ft. ____ in. Length ____ ft. ____ in.

12. Seams: Long ____ H.T.[1] ____ R.T. ____ Efficiency ____ %

    Girth ____ H.T.[1] ____ R.T. ____ No. of Courses ____

13. Heads (a) Material ____ T.S. ____ (b) Material ____ T.S. ____

Location	Thickness	Crown Radius	Knuckle Radius	Elliptical Ratio	Conical Apex Angle	Hemispherical Radius	Flat Diameter	Side to Press. (Conv. or Conc.)
(a) Top, bottom, ends								
(b) Channel								

If removable, bolts used (a) ____ (b) ____ (c) ____ Other fastening ____ (Describe or attach sketch)

14. Design pressure[2] ____ psi at ____ °F

    Drop Weight ____,
    Charpy Impact ____ ft-lb at temp. of ____ °F

Items below to be completed for all vessels where applicable.

15. Safety Valve Outlets: Number ____ Size ____ Location ____

16. Nozzles:

Purpose (Inlet, Outlet, Drain)	Number	Dia. or Size	Type	Material	Thickness	Reinforcement Material	How Attached

17. Inspection Openings: Manholes, No. ____ Size ____ Location ____
    Handholes, No. ____ Size ____ Location ____
    Threaded, No. ____ Size ____ Location ____

18. Supports: Skirt ____ (Yes or No) Lugs ____ (Number) Legs ____ (Number) Other ____ (Describe) Attached ____ (Where & How)

[1] If Postweld Heat-Treated.
[2] List other internal or external pressure with coincident temperature when applicable.

FORM N-2 NPT CERTIFICATE HOLDERS' DATA REPORT FOR NUCLEAR PART AND APPURTENANCES*

As required by the Provision of the ASME Code Rules, Section III, Div. 1

1. (a) Manufactured by General Electric Company, Castle Hayne Rd., Wilmington, N.C.
(Name and address of NPT Certificate Holder)

(b) Manufactured for General Electric Company, San Jose, California (NEBG)
(Name and address of N Certificate Holder for completed nuclear component)

2. Identification-Certificate Holder's Serial No. of Part A3498 Nat'l Bd. No.

(a) Constructed According to Drawing No. 768E534G001 Drawing Prepared by D. L. Peterson

(b) Description of Part Inspected Control Rod Drive, Model #7RDB144DG001

(c) Applicable ASME Code: Section III, Edition 1974, Addenda date W'75, Case No. N207 1361-2 Class 1

1. Cap 166B9274P1
(167A2343)
SA182 - F316
3/8 thick x 1 1/16 OD

2. Indicator Pipe 166B9313P1
SA312-TP316
3/4 sch 40-seamless pipe
0.113 wall thickness
1.065 max. dia.

3. Plug 159A1176P1
SA182-F304
1/4 thick x 0.812 OD

4. Flange 919D610P1 (719E474)
SA182-F304
3.37 thick x 9 5/8 OD
neck 1 1/16 thick x 5.0 OD
2.875 ID

5. Base 137C5311P1
XM-19 ASME SA479
3.0 OD x .884 ID

6. Ring Flange 114B5122P2
SA182-F304
1" thick x 5.0 OD x 1.75 ID

7. Cap Screw 117C4516P2
SA193-B6
6 ea. 1/2 dia. on 4 1/8 bolt circle

8. Plug 175A7961P1
SA182-F304
0.38 thick x 1.307 dia.

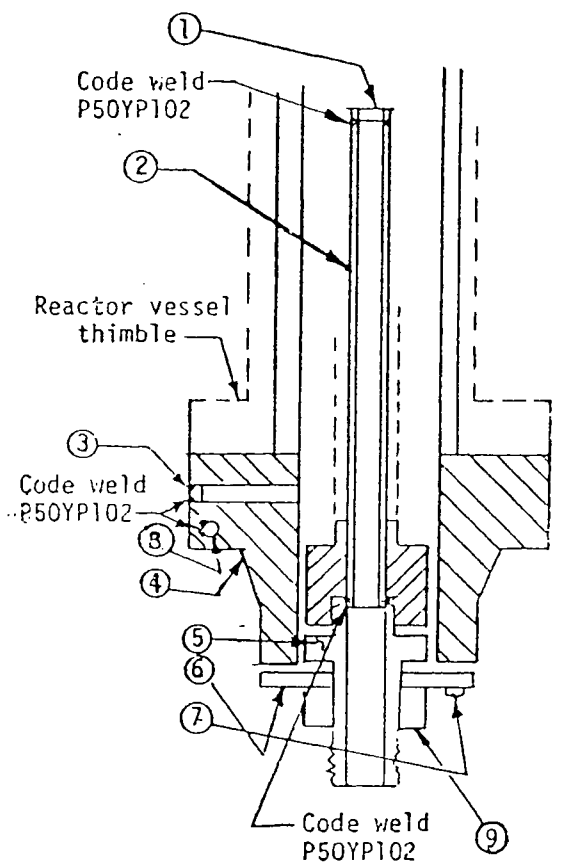

CONTROL ROD DRIVE
DWG - 768E534

9. Nut 137C5934P1
XM-19 SA479
1.30 thick x 2.62 dia.

FORM N-2 NPT CERTIFICATE HOLDERS' DATA REPORT FOR NUCLEAR PART AND APPURTENANCES*

As required by the Provision of the ASME Code Rules, Section III, Div. 1

1. (a) Manufactured by General Electric Company, Castle Hayne Rd., Wilmington, N.C.
(Name and address of NPT Certificate Holder)

(b) Manufactured for General Electric Company, San Jose, California
(Name and address of N Certificate Holder for completed nuclear component)

2. Identification-Certificate Holder's Serial No. of Part A2571 Nat'l Bd. No.

(a) Constructed According to Drawing No. 768E534G001 Drawing Prepared by D. L. Peterson

(b) Description of Part Inspected Control Rod Drive, Model #7RDB144DG001

(c) Applicable ASME Code: Section III, Edition 1974, Addenda date W'75, Case No. N207 1361-2 Class 1

3. Remarks: Standard part for use with Reactor. Hydrostatically tested at 1820 psi.
(Brief description of service for which component was designed)

* Total number of sheets - 2

We certify that the statements made in this report are correct and this vessel part or appurtenance as defined in the Code conforms to the rules of construction of the ASME Code Section III.
(The applicable Design Specification and Stress Report are not the responsibility of the NPT Certificate Holder for parts. An NPT Certificate Holder for appurtenances is responsible for furnishing a separate Design Specification and Stress Report if the appurtenance is not included in the component Design Specification and Stress Report.)

Date 11-1 19 79 Signed GE, NEPD-WMD-QA (NPT Certificate Holder) By

Certificate of Authorization Expires June 16, 1981 Certificate of Authorization No. NPT N-1151

CERTIFICATION OF DESIGN FOR APPURTENANCE (when applicable)

Design information on file at GE, NEPD-WMD-QA, Castle Hayne Rd., Wilmington, N.C.
22A5556, Rev. 1

Stress analysis report on file at GE, NEPD-WMD-QA, Castle Hayne Rd., Wilmington, N.C.
22A4912, Rev. 2

Design specifications certified by B. N. Sridhar Prof. Eng. State Calif Reg. No. 18345

Stress analysis report certified by B. N. Sridhar Prof. Eng. State Calif Reg. No. 18345

CERTIFICATE OF SHOP INSPECTION

I, the undersigned, holding a valid commission issued by the National Board of Boiler and Pressure Vessel Inspectors and/or the State or Province of North Carolina and employed by Department of Labor of State of North Carolina have inspected the part of a pressure vessel described in this Partial Data Report on 11-1 19 79, and state that to the best of my knowledge and belief, the NPT Certificate Holder has constructed this part in accordance with the ASME Code Section III.

By signing this certificate, neither the Inspector nor his employer makes any warranty, expressed or implied, concerning the part described in this Partial Data Report. Furthermore, neither the Inspector nor his employer shall be liable in any manner for any personal injury or property damage or a loss of any kind arising from or connected with this inspection.

Date 11-1 19 79

NC 723, PA WC1766, OHIO.

Inspector's Signature Commissions National Board, State, Province and No.

*Supplemental sheets in form of lists, sketches or drawings may be used provided (1) size is 8½" x 11", (2) information in Items 1-2 on this Data Report is included on each sheet, and (3) each sheet is numbered and number of sheets is recorded in Item 3, "Remarks".

(10/77) This form (E00040) may be obtained from the Order Dept., ASME, 345 E. 47th St., New York, N.Y. 10017

FORM N-2 (back)

Items 4–8 incl. to be completed for single wall vessels, jackets of jacketed vessels, or shells of heat exchangers.

4. Shell: Material ____ (Kind & Spec. No.) ____ T.S. ____ (Min. of Range Specified) Nominal Thickness ____ in. Corrosion Allowance ____ in. Dia. ____ ft. ____ in. Length ____ ft. ____ in.

5. Seams: Long ____ H.T.[1] ____ R.T. ____ Efficiency ____ %

Girth ____ H.T.[1] ____ R.T. ____ No. of Courses ____

6. Heads: (a) Material ____ T.S. ____ (b) Material ____ T.S. ____

Location (Top, bottom, ends)	Thickness	Crown Radius	Knuckle Radius	Elliptical Ratio	Conical Apex Angle	Hemispherical Radius	Flat Diameter	Side to Press. (Conv. or Conc.)
(a)								
(b)								

If removable, bolts used ____ (Material, Spec. No., T.S., Size, Number) Other fastening ____ (Describe or attach sketch)

7. Jacket Closure: ____ (Describe as ogee end weld, bar, etc. If bar give dimensions, if bolted, describe or sketch)

8. Design pressure[2] 1250 psi at 575 °F

Drop Weight ____
Charpy Impact ____ ft-lb
at temp. of ____ °F

Items 9 and 10 to be completed for tube sections

9. Tube Sheets: Stationary. Material ____ (Kind & Spec. No.) Dia. ____ (Subject to pressure) Thickness ____ in. Attachment ____ (Welded, Bolted)

Floating. Material ____ Dia. ____ Thickness ____ in. Attachment ____

10. Tubes: Material ____ O.D. ____ in. Thickness ____ inches or gage. Number ____ Type ____ (Str. or U)

Items 11–14 incl. to be completed for inner chambers of jacketed vessels, or channels of heat exchangers.

11. Shell: Material ____ (Kind & Spec. No.) T.S. ____ (Min. of Range Specified) Nominal Thickness ____ in. Corrosion Allowance ____ in. Dia. ____ ft. ____ in. Length ____ ft. ____ in.

12. Seams: Long ____ H.T.[1] ____ R.T. ____ Efficiency ____ %

Girth ____ H.T.[1] ____ R.T. ____ No. of Courses ____

13. Heads (a) Material ____ T.S. ____ (b) Material ____ T.S. ____

Location	Thickness	Crown Radius	Knuckle Radius	Elliptical Ratio	Conical Apex Angle	Hemispherical Radius	Flat Diameter	Side to Press. (Conv. or Conc.)
(a) Top, bottom, ends								
(b) Channel								

If removable, bolts used (a) ____ (b) ____ (c) ____ Other fastening ____ (Describe or attach sketch)

14. Design pressure[2] ____ psi at ____ °F

Drop Weight: ____
Charpy Impact ____ ft-lb
at temp. of ____ °F

Items below to be completed for all vessels where applicable.

15. Safety Valve Outlets: Number ____ Size ____ Location ____

16. Nozzles:

Purpose (Inlet, Outlet, Drain)	Number	Dia. or Size	Type	Material	Thickness	Reinforcement Material	How Attached

17. Inspection Manholes, No. ____ Size ____ Location ____
Openings: Handholes, No. ____ Size ____ Location ____
Threaded, No. ____ Size ____ Location ____

18. Supports: Skirt ____ (Yes or No) Lugs ____ (Number) Legs ____ (Number) Other ____ (Describe) Attached ____ (Where & How)

[1] If Postweld Heat-Treated.
[2] List other internal or external pressure with coincident temperature when applicable.

FORM N-2 NPT CERTIFICATE HOLDERS' DATA REPORT FOR NUCLEAR PART AND APPURTENANCES*

As required by the Provision of the ASME Code Rules, Section III, Div. 1

1. (a) Manufactured by General Electric Company, Castle Hayne Rd., Wilmington, N.C.
(Name and address of NPT Certificate Holder)

(b) Manufactured for General Electric Company, San Jose, California (NEBG)
(Name and address of N Certificate Holder for completed nuclear component)

2. Identification-Certificate Holder's Serial No. of Part A2571 Nat'l Bd. No.

(a) Constructed According to Drawing No. 768E534G001 Drawing Prepared by D. L. Peterson

(b) Description of Part Inspected Control Rod Drive, Model #7RDB144DG001

(c) Applicable ASME Code: Section III, Edition 1974, Addenda date W'75, Case No. N207 1361-2 Class 1

1. Cap 166B9274P1
(167A2343)
SA182 - F316
3/8 thick x 1 1/16 OD

2. Indicator Pipe 166B9313P1
SA312-TP316
3/4 sch 40-seamless pipe
0.113 wall thickness
1.065 max. dia.

3. Plug 159A1176P1
SA182-F304
1/4 thick x 0.812 OD

4. Flange 919D610P1 (719E474)
SA182-F304
3.37 thick x 9 5/8 OD
neck 1 1/16 thick x 5.0 OD
2.875 ID

5. Base 137C5311P1
XM-19 ASME SA479
3.0 OD x .884 ID

6. Ring Flange 114B5122P2
SA182-F304
1" thick x 5.0 OD x 1.75 ID

7. Cap Screw 117C4516P2
SA193-B6
6 ea. 1/2 dia. on 4 1/8 bolt circle

8. Plug 175A7961P1
SA182-F304
0.38 thick x 1.307 dia.

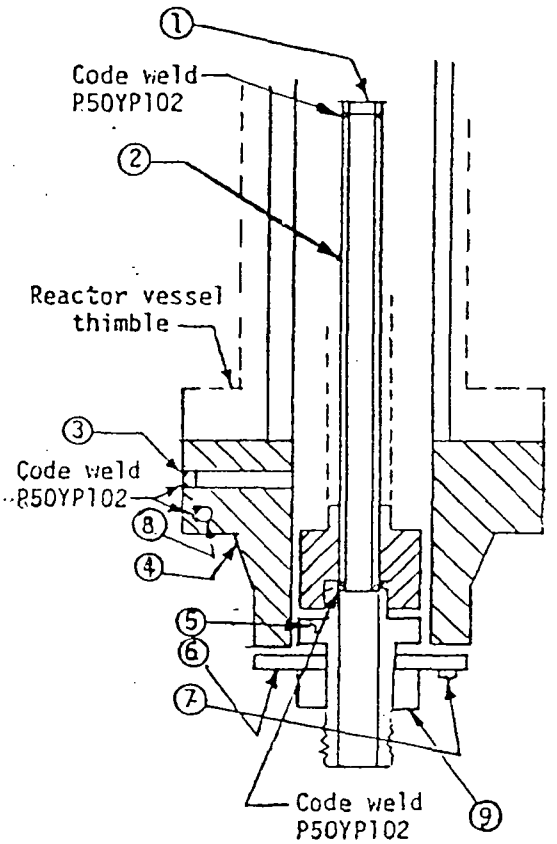

CONTROL ROD DRIVE
DWG - 768E534

9. Nut 137C5934P1
XM-19 SA479
1.30 thick x 2.62 dia.

~~14 OF 35~~

Sheet 1 of 2 12 OF 31

FORM N-2 NPT CERTIFICATE HOLDERS' DATA REPORT FOR NUCLEAR PART AND APPURTENANCES*

As required by the Provision of the ASME Code Rules, Section III, Div. 1

1. (a) Manufactured by General Electric Company, Castle Hayne Rd., Wilmington, N.C.
(Name and address of NPT Certificate Holder)

(b) Manufactured for General Electric Company, San Jose, California (NEBG)
(Name and address of N Certificate Holder for completed nuclear component)

2. Identification-Certificate Holder's Serial No. of Part A3895 Nat'l Bd. No.

(a) Constructed According to Drawing No. 768E534G001 Drawing Prepared by D. L. Peterson

(b) Description of Part Inspected Control Rod Drive, Model #7RDB144DG001

(c) Applicable ASME Code: Section III, Edition 1974, Addenda date W'75, Case No. N207 1361-2 Class 1

3. Remarks: Standard part for use with Reactor. Hydrostatically tested at 1820 psi.
(Brief description of service for which component was designed)

* Total number of sheets - 2

We certify that the statements made in this report are correct and this vessel part or appurtenance as defined in the Code conforms to the rules of construction of the ASME Code Section III.
(The applicable Design Specification and Stress Report are not the responsibility of the NPT Certificate Holder for parts. An NPT Certificate Holder for appurtenances is responsible for furnishing a separate Design Specification and Stress Report if the appurtenance is not included in the component Design Specification and Stress Report.)

Date 8/26/ 19 81 Signed GE, NEPD-WMD-OA By J. Ettrodermier
(NPT Certificate Holder)

Certificate of Authorization Expires September 15, 1981 Certificate of Authorization No. NPT N-1151

CERTIFICATION OF DESIGN FOR APPURTENANCE (when applicable)

Design information on file at GE, NEPD-WMD-OA, Castle Hayne Rd., Wilmington, N.C.
22A5556, Rev. 2

Stress analysis report on file at GE, NEPD, San Jose, Calif.
22A4912, Rev. 2

Design specifications certified by B. N. Sridhar Prof. Eng. State Calif Reg. No. 13345

Stress analysis report certified by B. N. Sridhar Prof. Eng. State Calif Reg. No. 13345

CERTIFICATE OF SHOP INSPECTION

I, the undersigned, holding a valid commission issued by the National Board of Boiler and Pressure Vessel Inspectors and/or the State or Province of North Carolina and employed by Department of Labor of State of North Carolina have inspected the part of a pressure vessel described in this Partial Data Report on 8/26/ 19 81 and state that to the best of my knowledge and belief, the NPT Certificate Holder has constructed this part in accordance with the ASME Code Section III.

By signing this certificate, neither the inspector nor his employer makes any warranty, expressed or implied, concerning the part described in this Partial Data Report. Furthermore, neither the inspector nor his employer shall be liable in any manner for any personal injury or property damage or a loss of any kind arising from or connected with this inspection.

Date 8/26/ 19 81

E. B. Stassill
Inspector's Signature

Commissions N.C. 723, PA WC1766, OHIO
National Board, State, Province and No.

00128

* Supplemental sheets in form of lists, sketches or drawings may be used provided (1) size is 8½" x 11", (2) information in items 1-2 on this Data Report is included on each sheet, and (3) each sheet is numbered and number of sheets is recorded in item 3, "Remarks"

(10/77) This form (E00040) may be obtained from the Order Dept., ASME, 345 E. 47th St., New York, N.Y. 10017

FORM N-2 (back)

Items 4–8 incl. to be completed for single wall vessels, jackets of jacketed vessels, or shells of heat exchangers.

4. Shell: Material _____ T.S. _____ Nominal Thickness ____ in. Corrosion Allowance ____ in. Dia. ____ ft. ____ in. Length ____ ft. ____ in.
(Kind & Spec. No.) (Min. of Range Specified)

5. Seams: Long _____ H.T.[1] _____ R.T. _____ Efficiency _____ %

Girth _____ H.T.[1] _____ R.T. _____ No. of Courses _____

6. Heads: (a) Material _____ T.S. _____ (b) Material _____ T.S. _____

Location (Top, bottom, ends)	Thickness	Crown Radius	Knuckle Radius	Elliptical Ratio	Conical Apex Angle	Hemispherical Radius	Flat Diameter	Side to Press. (Conv. or Conc.)
(a)								
(b)								

If removable, bolts used _____ (Material, Spec. No., T.S., Size, Number) Other fastening _____ (Describe or attach sketch)

7. Jacket Closure: _____
(Describe as edge and weld, bar, etc. If bar give dimensions, if bolted, describe or sketch)

8. Design pressure[2] 1250 psi at 575 °F

Drop Weight _____
Charpy Impact _____ ft-lb
at temp. of _____ °F

Items 9 and 10 to be completed for tube sections

9. Tube Sheets: Stationary. Material _____ (Kind & Spec. No.) Dia. _____ (Subject to pressure) Thickness ____ in. Attachment _____ (Welded, Bolted)

Floating. Material _____ Dia. _____ Thickness ____ in. Attachment _____

10. Tubes: Material _____ O.D. ____ in. Thickness _____ inches or gage. Number _____ Type _____ (Str. or U)

Items 11–14 incl. to be completed for inner chambers of jacketed vessels, or channels of heat exchangers.

11. Shell: Material _____ T.S. _____ Nominal Thickness ____ in. Corrosion Allowance ____ in. Dia. ____ ft. ____ in. Length ____ ft. ____ in.
(Kind & Spec. No.) (Min. of Range Specified)

12. Seams: Long _____ H.T.[1] _____ R.T. _____ Efficiency _____ %

Girth _____ H.T.[1] _____ R.T. _____ No. of Courses _____

13. Heads (a) Material _____ T.S. _____ (b) Material _____ T.S. _____

Location	Thickness	Crown Radius	Knuckle Radius	Elliptical Ratio	Conical Apex Angle	Hemispherical Radius	Flat Diameter	Side to Press. (Conv. or Conc.)
(a) Top, bottom, ends								
(b) Channel								

If removable, bolts used (a) _____ (b) _____ (c) _____ Other fastening _____ (Describe or attach sketch)

14. Design pressure[2] _____ psi at _____ °F

Drop Weight _____
Charpy Impact _____ ft-lb
at temp. of _____ °F

Items below to be completed for all vessels where applicable.

15. Safety Valve Outlets: Number _____ Size _____ Location _____

16. Nozzles:

Purpose (Inlet, Outlet, Drain)	Number	Dia. or Size	Type	Material	Thickness	Reinforcement Material	How Attached

17. Inspection Openings: Manholes, No. _____ Size _____ Location _____
Handholes, No. _____ Size _____ Location _____
Threaded, No. _____ Size _____ Location _____

18. Supports: Skirt _____ (Yes or No) Lugs _____ (Number) Legs _____ (Number) Other _____ (Describe) Attached _____ (Where & How)

[1] If Postweld Heat-Treated.
[2] List other internal or external pressure with coincident temperature when applicable.

~~14 OF 35~~ 13 OF 31

Sheet 2 of 2

FORM N-2 NPT CERTIFICATE HOLDERS' DATA REPORT FOR NUCLEAR PART AND APPURTENANCES*

As required by the Provision of the ASME Code Rules, Section III, Div. 1

1. (a) Manufactured by General Electric Company, Castle Hayne Rd., Wilmington, N.C.
(Name and address of NPT Certificate Holder)

(b) Manufactured for General Electric Company, San Jose, California (NEBG)
(Name and address of N Certificate Holder for completed nuclear component)

2. Identification-Certificate Holder's Serial No. of Part A3895 Nat'l Bd. No.

(a) Constructed According to Drawing No. 768E534G001 Drawing Prepared by D. L. Peterson

(b) Description of Part Inspected Control Rod Drive, Model #7RDB144DG001

(c) Applicable ASME Code: Section III, Edition 1974, Addenda date W'75, Case No. N207 1361-2 Class 1

1. Cap 166B9274P1
(167A2343)
SA182 - F316
3/8 thick x 1 1/16 OD

2. Indicator Pipe 166B9313P1
SA312-TP316
3/4 sch 40-seamless pipe
0.113 wall thickness
1.065 max. dia.

3. Plug 159A1176P1
SA182-F304
1/4 thick x 0.812 OD

4. Flange 919D610P1 (719E474)
SA182-F304
3.37 thick x 9 5/8 OD
neck 1 1/16 thick x 5.0 OD
2.875 ID

5. Base 137C5311P1
XM-19 ASME SA479
3.0 OD x .884 ID

6. Ring Flange 11485122P2
SA182-F304
1" thick x 5.0 OD x 1.75 ID

7. Cap Screw 117C4516P2
SA193-B6
6 ea. 1/2 dia. on 4 1/8 bolt circle

8. Plug 175A7961P1
SA182-F304
0.38 thick x 1.307 dia.

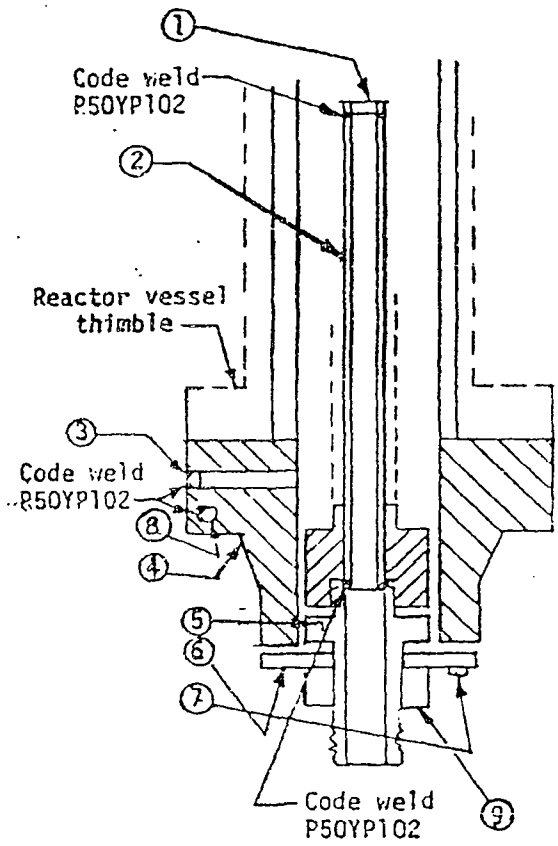

CONTROL ROD DRIVE
DWG - 768E534

9. Nut 137C5934P1
XM-19 SA479
1.30 thick x 2.62 dia.

0C125

18 of 3
14 of 31

FORM N-2 NPT CERTIFICATE HOLDERS' DATA REPORT FOR NUCLEAR PART AND APPURTENANCES*

As required by the Provision of the ASME Code Rules, Section III, Div. 1

1. (a) Manufactured by General Electric Company, Castle Hayne Rd., Wilmington, N.C.
(Name and address of NPT Certificate Holder)

(b) Manufactured for General Electric Company, San Jose, California (NEBG)
(Name and address of N Certificate Holder for completed nuclear component)

2. Identification-Certificate Holder's Serial No. of Part A5684 Nat'l Bd. No.

(a) Constructed According to Drawing No. 768E534G001 Drawing Prepared by D. L. Peterson

(b) Description of Part Inspected Control Rod Drive, Model #7RDB144DG001

(c) Applicable ASME Code: Section III, Edition 1974, Addenda date W'75, Case No. N207 N295 1361-2 Class 1

3. Remarks: Standard part for use with Reactor. Hydrostatically tested at 1820 psi.
(Brief description of service for which component was designed)

* Total number of sheets - 2

We certify that the statements made in this report are correct and this vessel part or appurtenance as defined in the Code conforms to the rules of construction of the ASME Code Section III.
(The applicable Design Specification and Stress Report are not the responsibility of the NPT Certificate Holder for parts. An NPT Certificate Holder for appurtenances is responsible for furnishing a separate Design Specification and Stress Report if the appurtenance is not included in the component Design Specification and Stress Report.)

Date 8/31 19 81 Sig. GE, NEPD-WMD
(NPT Certificate Holder)

Certificate of Authorization Expires September 15, 1981 Certificate of Authorization No. NPT N-1151

CERTIFICATION OF DESIGN FOR APPURTENANCE (when applicable)

Design information on file at GE, NEPD-WMD-OA, Castle Hayne Rd., Wilmington, N.C.
22A5556, Rev. 2

Stress analysis report on file at GE, NEPD, San Jose, Calif.
22A4912, Rev. 2

Design specifications certified by B. N. Sridhar Prof. Eng. State Calif Reg. No. 18345

Stress analysis report certified by B. N. Sridhar Prof. Eng. State Calif Reg. No. 18345

CERTIFICATE OF SHOP INSPECTION

I, the undersigned, holding a valid commission issued by the National Board of Boiler and Pressure Vessel Inspectors and/or the State or Province of North Carolina and employed by Department of Labor of State of North Carolina have inspected the part of a pressure vessel described in this Partial Data Report on 8/31 19 81 and state that to the best of my knowledge and belief, the NPT Certificate Holder has constructed this part in accordance with the ASME Code Section III.

By signing this certificate, neither the Inspector nor his employer makes any warranty, expressed or implied, concerning the part described in this Partial Data Report. Furthermore, neither the Inspector nor his employer shall be liable in any manner for any personal injury or property damage or a loss of any kind arising from or connected with this inspection.

Date 8/31 19 81

Inspector's Signature

Commissions N.C. 723, PA.WC1766, OHIO
National Board, State, Province and No.

* Supplemental sheets in form of lists, sketches or drawings may be used provided (1) size is 8½" x 11", (2) information in items 1-2 on this Data Report is included on each sheet, and (3) each sheet is numbered and number of sheets is recorded in item 3, "Remarks"

00578

(10/77) This form (E00040) may be obtained from the Order Dept., ASME, 345 E. 47th St., New York, N.Y. 10017

FORM N-2 (back)

Items 4–8 incl. to be completed for single wall vessels, jackets of jacketed vessels, or shells of heat exchangers.

4. Shell: Material _____ (Kind & Spec. No.) T.S. _____ (Min. of Range Specified) Nominal Thickness ____ in. Corrosion Allowance ____ in. Dia. ____ ft. ____ in. Length ____ ft. _____ in.

5. Seams: Long _____ H.T.[1] _____ R.T. _____ Efficiency _____ %

Girth _____ H.T.[1] _____ R.T. _____ No. of Courses _____

6. Heads: (a) Material _____ T.S. _____ (b) Material _____ T.S. _____

Location (Top, bottom, ends)	Thickness	Crown Radius	Knuckle Radius	Elliptical Ratio	Conical Apex Angle	Hemispherical Radius	Flat Diameter	Side to Press. (Conv. or Conc.)
(a)								
(b)								

If removable, bolts used _____ (Material, Spec. No., T.S., Size, Number) Other fastening _____ (Describe or attach sketch)

7. Jacket Closure: _____ (Describe as ogee and weld, bar, etc. If bar give dimensions, if bolted, describe or sketch)

8. Design pressure[2] 1250 psi at 575 °F Drop Weight _____ Charpy Impact _____ ft-lb at temp. of _____ °F

Items 9 and 10 to be completed for tube sections

9. Tube Sheets: Stationary. Material _____ (Kind & Spec. No.) Dia. _____ (Subject to pressure) Thickness ____ in. Attachment _____ (Welded, Bolted)

Floating. Material _____ Dia. _____ Thickness ____ in. Attachment _____

10. Tubes: Material _____ O.D. ____ in. Thickness _____ inches or gage. Number _____ Type _____ (Str. or U)

Items 11–14 incl. to be completed for inner chambers of jacketed vessels, or channels of heat exchangers.

11. Shell: Material _____ (Kind & Spec. No.) T.S. _____ (Min. of Range Specified) Nominal Thickness ____ in. Corrosion Allowance ____ in. Dia. ____ ft. ____ in. Length ____ ft. _____ in.

12. Seams: Long _____ H.T.[1] _____ R.T. _____ Efficiency _____ %

Girth _____ H.T.[1] _____ R.T. _____ No. of Courses _____

13. Heads (a) Material _____ T.S. _____ (b) Material _____ T.S. _____

Location	Thickness	Crown Radius	Knuckle Radius	Elliptical Ratio	Conical Apex Angle	Hemispherical Radius	Flat Diameter	Side to Press. (Conv. or Conc.)
(a) Top, bottom, ends								
(b) Channel								

If removable, bolts used (a) _____ (b) _____ (c) _____ Other fastening _____ (Describe or attach sketch)

14. Design pressure[2] _____ psi at _____ °F Drop Weight _____ Charpy Impact _____ ft-lb at temp. of _____ °F

Items below to be completed for all vessels where applicable.

15. Safety Valve Outlets: Number _____ Size _____ Location _____

16. Nozzles:

Purpose (Inlet, Outlet, Drain)	Number	Dia. or Size	Type	Material	Thickness	Reinforcement Material	How Attached

17. Inspection Openings: Manholes, No. _____ Size _____ Location _____
Handholes, No. _____ Size _____ Location _____
Threaded, No. _____ Size _____ Location _____

18. Supports: Skirt _____ (Yes or No) Lugs _____ (Number) Legs _____ (Number) Other _____ (Describe) Attached _____ (Where & How)

[1] If Postweld Heat-Treated.
[2] List other internal or external pressure with coincident temperature when applicable.

Sheet 2 of 2 ~~14 OF 35~~ 15 OF 31

FORM N-2 NPT CERTIFICATE HOLDERS' DATA REPORT FOR NUCLEAR PART AND APPURTENANCES*

As required by the Provision of the ASME Code Rules, Section III, Div. 1

1. (a) Manufactured by General Electric Company, Castle Hayne Rd., Wilmington, N.C.
(Name and address of NPT Certificate Holder)

(b) Manufactured for General Electric Company, San Jose, California (NEBG)
(Name and address of N Certificate Holder for completed nuclear component)

2. Identification-Certificate Holder's Serial No. of Part A5684 Nat'l Bd. No.

(a) Constructed According to Drawing No. 768E534G001 Drawing Prepared by D. L. Peterson

(b) Description of Part Inspected Control Rod Drive, Model #7RDB144DG001

(c) Applicable ASME Code: Section III, Edition 1974, Addenda date W'75, Case No. N207 N295 1361-2 Class 1

1. Cap 166B9274P1
(167A2343)
SA182 - F316
3/8 thick x 1 1/16 OD

2. Indicator Pipe 166B9313P1
SA312-TP316
3/4 sch 40-seamless pipe
[illegible]
1.065 max. dia.

3. Plug 159A1176P1
SA182-F304
1/4 thick x 0.812 OD

4. Flange 919D610P1 (719E474)
SA182-F304
3.37 thick x 9 5/8 OD
neck 1 1/16 thick x 5.0 OD
2.875 ID

5. Base 137C5311P1
XM-19 ASME SA479
3.0 OD x .884 ID

6. Ring Flange 114B5122P2
SA182-F304
1" thick x 5.0 OD x 1.75 ID

7. Cap Screw 117C4516P2
SA193-B6
6 ea. 1/2 dia. on 4 1/8 bolt circle

8. Plug 175A7961P1
SA182-F304
0.38 thick x 1.307 dia.

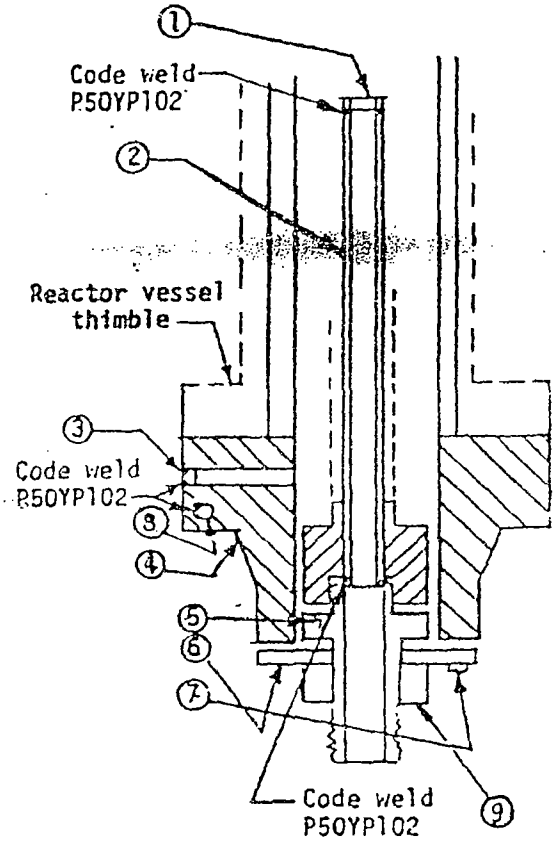

CONTROL ROD DRIVE
DWG - 768E534

9. Nut 137C5934P1
XM-19 SA479
1.30 thick x 2.62 dia.

00579

16 OF 31

FORM N-3 NPT CERTIFICATE HOLDERS' DATA REPORT FOR NUCLEAR PART AND APPURTENANCES*

As required by the Provision of the ASME Code Rules, Section III, Div. 1

1. (a) Manufactured by General Electric Company, Castle Hayne Rd., Wilmington, N.C.
(Name and address of NPT Certificate Holder)

(b) Manufactured for General Electric Company, San Jose, California (NEBG)
(Name and address of N Certificate Holder for completed nuclear component)

2. Identification-Certificate Holder's Serial No. of Part A5427 Nat'l Bd. No.

(a) Constructed According to Drawing No. 768E534G001 Drawing Prepared by D. L. Peterson

(b) Description of Part Inspected Control Rod Drive, Model #7RDB144DG001

(c) Applicable ASME Code: Section III, Edition 1974, Addenda date W'75, Case No. N207 1361-2 Class 1

3. Remarks: Standard part for use with Reactor. Hydrostatically tested at 1820 psi.
* (Brief description of service for which component was designed)

* Total number of sheets - 2

We certify that the statements made in this report are correct and this vessel part or appurtenance as defined in the Code conforms to the rules of construction of the ASME Code Section III.
(The applicable Design Specification and Stress Report are not the responsibility of the NPT Certificate Holder for parts. An NPT Certificate Holder for appurtenances is responsible for furnishing a separate Design Specification and Stress Report if the appurtenance is not included in the component Design Specification and Stress Report.)

Date 7/23 19 81 Signed GE, NEPD-WMD-QA By J. Strudemann
(Name of Certificate Holder)

Certificate of Authorization Expires September 15, 1981 Certificate of Authorization No. NPT N-1151

CERTIFICATION OF DESIGN FOR APPURTENANCE (when applicable)

Design information on file at GE, NEPD-WMD-QA, Castle Hayne Rd., Wilmington, N.C.
22A5556, Rev. 2

Stress analysis report on file at GE, NEPD-WMD-QA, Castle Hayne Rd., Wilmington, N.C.
22A4912, Rev. 2

Design specifications certified by B. N. Sridhar Prof. Eng. State Calif Reg. No. 18345

Stress analysis report certified by B. N. Sridhar Prof. Eng. State Calif Reg. No. 18345

CERTIFICATE OF SHOP INSPECTION

I, the undersigned, holding a valid commission issued by the National Board of Boiler and Pressure Vessel Inspectors and/or the State or Province of North Carolina and employed by Department of Labor of State of North Carolina have inspected the part of a pressure vessel described in this Partial Data Report on 7/23 19 81, and state that to the best of my knowledge and belief, the NPT Certificate Holder has constructed this part in accordance with the ASME Code Section III.

By signing this certificate, neither the Inspector nor his employer makes any warranty, expressed or implied, concerning the part described in this Partial Data Report. Furthermore, neither the Inspector nor his employer shall be liable in any manner for any personal injury or property damage or a loss of any kind arising from or connected with this inspection.

Date 7/23 19 81

Inspector's Signature

Commissions N.C. 723, PA.WC1766, OHIO
National Board, State, Province and No.

05803

*Supplemental sheets in form of lists, sketches or drawings may be used provided (1) size is 8½" x 11", (2) information in items 1 and 2 on this Data Report is included on each sheet, and (3) each sheet is numbered and number of sheets is recorded in item 3.

(10/77) This form (E00040) may be obtained from the Order Dept., ASME, 345 E. 47th St., New York, N.Y. 10017

FORM N-2 (back)

Items 4–8 incl. to be completed for single wall vessels, jackets of jacketed vessels, or shells of heat exchangers.

4. Shell: Material ____ (Kind & Spec. No.) ____ T.S. ____ (Min. of Range Specified) Nominal Thickness ____ in. Corrosion Allowance ____ in. Dia. ____ ft. ____ in. Length ____ ft. ____ in.

5. Seams: Long ____ H.T.[1] ____ R.T. ____ Efficiency ____ %

Girth ____ H.T.[1] ____ R.T. ____ No. of Courses ____

6. Heads: (a) Material ____ T.S. ____ (b) Material ____ T.S. ____

Location (Top, bottom, ends)	Thickness	Crown Radius	Knuckle Radius	Elliptical Ratio	Conical Apex Angle	Hemispherical Radius	Flat Diameter	Side to Press. (Conv. or Conc.)
(a)								
(b)								

If removable, bolts used ____ (Material, Spec. No., T.S., Size, Number) Other fastening ____ (Describe or attach sketch)

7. Jacket Closure: ____ (Describe as edge and weld, bar, etc. if bar give dimensions, if bolted, describe or sketch)

8. Design pressure[2] 1250 psi at 575 °F Drop Weight ____ Charpy Impact ____ ft-lb at temp. of ____ °F

Items 9 and 10 to be completed for tube sections

9. Tube Sheets: Stationary. Material ____ (Kind & Spec. No.) Dia. ____ (Subject to pressure) Thickness ____ in. Attachment ____ (Welded, Bolted)

Floating. Material ____ Dia. ____ Thickness ____ in. Attachment ____

10. Tubes: Material ____ O.D. ____ in. Thickness ____ inches or gage. Number ____ Type ____ (Str. or U)

Items 11–14 incl. to be completed for inner chambers of jacketed vessels, or channels of heat exchangers.

11. Shell: Material ____ (Kind & Spec. No.) ____ (Min. of Range Specified) Nominal Thickness ____ Corrosion Allowance ____ Dia. ____ ft. ____ in. Length ____ ft. ____ in.

12. Seams: Long ____ H.T.[1] ____ R.T. ____ Efficiency ____ %

Girth ____ H.T.[1] ____ R.T. ____ No. of Courses ____

13. Heads (a) Material ____ T.S. ____ (b) Material ____ T.S. ____

Location	Thickness	Crown Radius	Knuckle Radius	Elliptical Ratio	Conical Apex Angle	Hemispherical Radius	Flat Diameter	Side to Press. (Conv. or Conc.)
(a) Top, bottom, ends								
(b) Channel								

If removable, bolts used (a) ____ (b) ____ (c) ____ Other fastening ____ (Describe or attach sketch)

14. Design pressure[2] ____ psi at ____ °F Drop Weight ____ Charpy Impact ____ ft-lb at temp. of ____ °F

Items below to be completed for all vessels where applicable.

15. Safety Valve Outlets: Number ____ Size ____ Location ____

16. Nozzles:

Purpose (Inlet, Outlet, Drain)	Number	Dia. or Size	Type	Material	Thickness	Reinforcement Material	How Attached

17. Inspection Openings: Manholes, No. ____ Size ____ Location ____
Handholes, No. ____ Size ____ Location ____
Threaded, No. ____ Size ____ Location ____

18. Supports: Skirt ____ (Yes or No) Lugs ____ (Number) Legs ____ (Number) Other ____ (Describe) Attached ____ (Where & How)

[1] If Postweld Heat-Treated.
[2] Test other internal or external pressure with corresponding temperature when applicable

~~21 of 35~~ 17 of 31

Sheet 2 of 2

FORM N-2 NPT CERTIFICATE HOLDERS' DATA REPORT FOR NUCLEAR PART AND APPURTENANCES*

As required by the Provision of the ASME Code Rules, Section III, Div. 1

1. (a) Manufactured by General Electric Company, Castle Hayne Rd., Wilmington, N.C.
(Name and address of NPT Certificate Holder)

(b) Manufactured for General Electric Company, San Jose, California (NEBG)
(Name and address of N Certificate Holder for completed nuclear component)

2. Identification-Certificate Holder's Serial No. of Part A5427 Nat'l Bd. No.

(a) Constructed According to Drawing No. 768E534G001 Drawing Prepared by D. L. Peterson

(b) Description of Part Inspected Control Rod Drive, Model #7RDB144DG001

(c) Applicable ASME Code: Section III, Edition 1974, Addenda date W'75, Case No. N207 1361-2 Class 1

1. Cap 166B9274P1
(167A2343)
SA182 - F316
3/8 thick x 1 1/16 OD

2. Indicator Pipe 166B9313P1
SA312-TP316
3/4 sch 40-seamless pipe
[illegible]
1.065 max. dia.

3. Plug 159A1176P1
SA182-F304
1/4 thick x 0.812 OD

4. Flange 919D610P1 (719E474)
SA182-F304
3.37 thick x 9 5/8 OD
neck 1 1/16 thick x 5.0 OD
2.875 ID

5. Base 137C5311P1
XM-19 ASME SA479
3.0 OD x .884 ID

6. Ring Flange 11485122P2
SA182-F304
1" thick x 5.0 OD x 1.75 ID

7. Cap Screw 117C4516P2
SA193-B6
6 ea. 1/2 dia. on 4 1/8 bolt circle

8. Plug 175A7961P1
SA182-F304
0.38 thick x 1.307 dia.

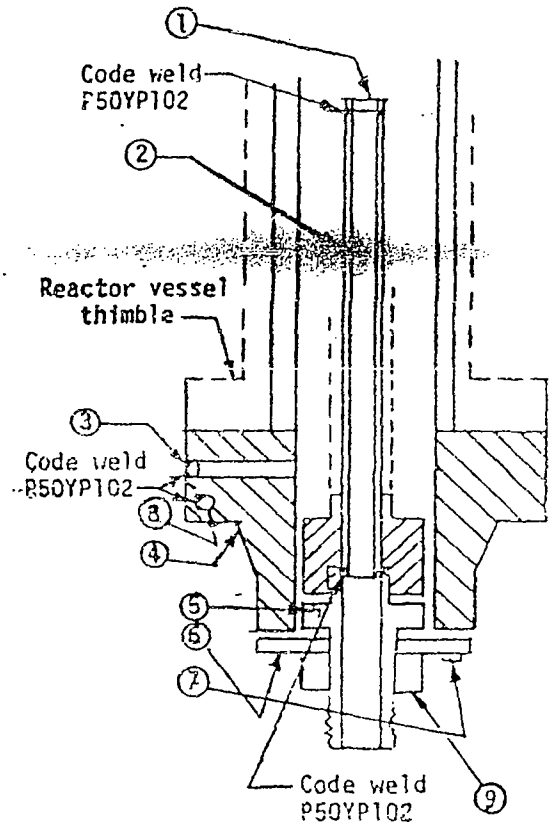

CONTROL ROD DRIVE
DWG - 768E534

9. Nut 137C5934P1
XM-19 SA479
1.30 thick x 2.52 dia.

00804

~~22 of 35~~ 18 of 31

FORM N-2 NPT CERTIFICATE HOLDERS' DATA REPORT FOR NUCLEAR PART AND APPURTENANCES*

As required by the Provision of the ASME Code Rules, Section III, Div. 1

1. (a) Manufactured by General Electric Company, Castle Hayne Rd., Wilmington, N.C.
(Name and address of NPT Certificate Holder)

(b) Manufactured for General Electric Company, San Jose, California (NEBG)
(Name and address of N Certificate Holder for completed nuclear component)

2. Identification-Certificate Holder's Serial No. of Part A5183 Nat'l Bd. No.

(a) Constructed According to Drawing No. 768E534G001 Drawing Prepared by D. L. Paterson

(b) Description of Part Inspected Control Rod Drive, Model #7RDB144DG001

(c) Applicable ASME Code: Section III, Edition 1974, Addenda date W'75, Case No. N207 1361-2 Class 1

3. Remarks: Standard part for use with Reactor. Hydrostatically tested at 1820 psi.
(Brief description of service for which component was designed)

* Total number of sheets - 2

We certify that the statements made in this report are correct and this vessel part or appurtenance as defined in the Code conforms to the rules of construction of the ASME Code Section III.
(The applicable Design Specification and Stress Report are not the responsibility of the NPT Certificate Holder for parts. An NPT Certificate Holder for appurtenances is responsible for furnishing a separate Design Specification and Stress Report if the appurtenance is not included in the component Design Specification and Stress Report.)

Date 12/10 19 80 Signed GE, NEPD-WMD-QA (NPT Certificate Holder) By [signature]

Certificate of Authorization Expires June 16, 1981 Certificate of Authorization No. NPT N-1151

CERTIFICATION OF DESIGN FOR APPURTENANCE (when applicable)

Design information on file at GE, NEPD-WMD-QA, Castle Hayne Rd., Wilmington, N.C.
22A5556, Rev. 1

Stress analysis report on file at GE, NEPD-WMD-QA, Castle Hayne Rd., Wilmington, N.C.
22A4912, Rev. 2

Design specifications certified by B. N. Sridhar Prof. Eng. State Calif Reg. No. 18345

Stress analysis report certified by B. N. Sridhar Prof. Eng. State Calif Reg. No. 18345

CERTIFICATE OF SHOP INSPECTION

I, the undersigned, holding a valid commission issued by the National Board of Boiler and Pressure Vessel Inspectors and/or the State or Province of North Carolina and employed by Department of Labor of State of North Carolina have inspected the part of a pressure vessel described in this Partial Data Report on 12/10 19 80, and state that to the best of my knowledge and belief, the NPT Certificate Holder has constructed this part in accordance with the ASME Code Section III.

By signing this certificate, neither the Inspector nor his employer makes any warranty, expressed or implied, concerning the part described in this Partial Data Report. Furthermore, neither the Inspector nor his employer shall be liable in any manner for any personal injury or property damage or a loss of any kind arising from or connected with this inspection.

Date 12/10 19 80

[signature] Inspector's Signature

Commissions N.C. 723, PA WC1766, OHIO
National Board, State, Province and No.

OC115

This form (E00040) may be obtained from the Order Dept., ASME, 345 E. 47th St., New York, N.Y. 10017

FORM N-2 (back)

Items 4–8 incl. to be completed for single wall vessels, jackets of jacketed vessels, or shells of heat exchangers.

4. Shell: Material ____ (Kind & Spec. No.) ____ T.S. ____ (Min. of Range Specified) Nominal Thickness ____ in. Corrosion Allowance ____ in. Dia. ____ ft. ____ in. Length ____ ft. ____ in.

5. Seams: Long ____ H.T.[1] ____ R.T. ____ Efficiency ____ %

Girth ____ H.T.[1] ____ R.T. ____ No. of Courses ____

6. Heads: (a) Material ____ T.S. ____ (b) Material ____ T.S. ____

Location (Top, bottom, ends)	Thickness	Crown Radius	Knuckle Radius	Elliptical Ratio	Conical Apex Angle	Hemispherical Radius	Flat Diameter	Side to Press. (Conv. or Conc.)
(a)								
(b)								

If removable, bolts used ____ (Material, Spec. No., T.S., Size, Number) Other fastening ____ (Describe or attach sketch)

7. Jacket Closure: ____ (Describe as edge weld, bar, etc. If bar give dimensions, if bolted, describe or sketch)

8. Design pressure[2] 1250 psi at 575 °F

Drop Weight ____
Charpy Impact ____ ft-lb
at temp. of ____ °F

Items 9 and 10 to be completed for tube sections

9. Tube Sheets: Stationary. Material ____ (Kind & Spec. No.) Dia. ____ (Subject to pressure) Thickness ____ in. Attachment ____ (Welded, Bolted)

Floating. Material ____ Dia. ____ Thickness ____ in. Attachment ____

10. Tubes: Material ____ O.D. ____ in. Thickness ____ inches or gage. Number ____ Type ____ (Str. or U)

Items 11–14 incl. to be completed for inner chambers of jacketed vessels, or channels of heat exchangers.

11. Shell: Material ____ (Kind & Spec. No.) T.S. ____ (Min. of Range Specified) Nominal Thickness ____ in. Corrosion Allowance ____ in. Dia. ____ ft. ____ in. Length ____ ft. ____ in.

12. Seams: Long ____ H.T.[1] ____ R.T. ____ Efficiency ____ %

Girth ____ H.T.[1] ____ R.T. ____ No. of Courses ____

13. Heads: (a) Material ____ T.S. ____ (b) Material ____ T.S. ____

Location	Thickness	Crown Radius	Knuckle Radius	Elliptical Ratio	Conical Apex Angle	Hemispherical Radius	Flat Diameter	Side to Press. (Conv. or Conc.)
(a) Top, bottom, ends								
(b) Channel								

If removable, bolts used (a) ____ (b) ____ (c) ____ Other fastening ____ (Describe or attach sketch)

14. Design pressure[2] ____ psi at ____ °F

Drop Weight ____
Charpy Impact ____ ft-lb
at temp. of ____ °F

Items below to be completed for all vessels where applicable.

15. Safety Valve Outlets: Number ____ Size ____ Location ____

16. Nozzles:

Purpose (Inlet, Outlet, Drain)	Number	Dia. or Size	Type	Material	Thickness	Reinforcement Material	How Attached

17. Inspection Openings: Manholes, No. ____ Size ____ Location ____
Handholes, No. ____ Size ____ Location ____
Threaded, No. ____ Size ____ Location ____

18. Supports: Skirt ____ (Yes or No) Legs ____ (Number) Lugs ____ (Number) Other ____ (Describe) Attached ____ (Where & How)

[1] Postweld Heat-Treated.
[2] Give either internal or external pressure with corresponding temperature when applicable.

Sheet 2 of 2 ~~23 of 35~~ 19 of 31

FORM N-2 NPT CERTIFICATE HOLDERS' DATA REPORT FOR NUCLEAR PART AND APPURTENANCES*

As required by the Provision of the ASME Code Rules, Section III, Div. 1

1. (a) Manufactured by General Electric Company, Castle Hayne Rd., Wilmington, N.C.
(Name and address of NPT Certificate Holder)

(b) Manufactured for General Electric Company, San Jose, California (NEBG)
(Name and address of N Certificate Holder for completed nuclear component)

2. Identification-Certificate Holder's Serial No. of Part A5183 Nat'l Bd. No.

(a) Constructed According to Drawing No. 768E534G001 Drawing Prepared by D. L. Peterson

(b) Description of Part Inspected Control Rod Drive, Model #7RDB144DG001

(c) Applicable ASME Code: Section III, Edition 1974, Addenda date W'75 Case No. N207 1361-2 Class 1

7. Cap 16639274P1
(167A2343)
SA182 - F316
3/8 thick x 1 1/16 OD

2. Indicator Pipe 16689313P1
SA312-TP316
3/4 sch 40-seamless pipe
0.113 wall thickness
1.065 max. dia.

3. Plug 159A1176P1
SA182-F304
1/4 thick x 0.812 OD

4. Flange 919061CP1 (719E474)
SA182-F304
5.37 thick x 9 5/8 OD
neck 1 1/16 thick x 5.0 OD
2.375 ID

5. Base 137C5311P1
XM-19 ASME SA479
3.0 OD x .884 ID

6. Ring Flange 11485122P2
SA182-F304
1" thick x 5.0 OD x 1.75 ID

7. Cap Screw 117C4516P2
SA193-B6
6 ea. 1/2 dia. on 4 1/8 bolt circle

8. Plug 175A7267P1
SA182-F304
0.38 thick x 1.307 dia.

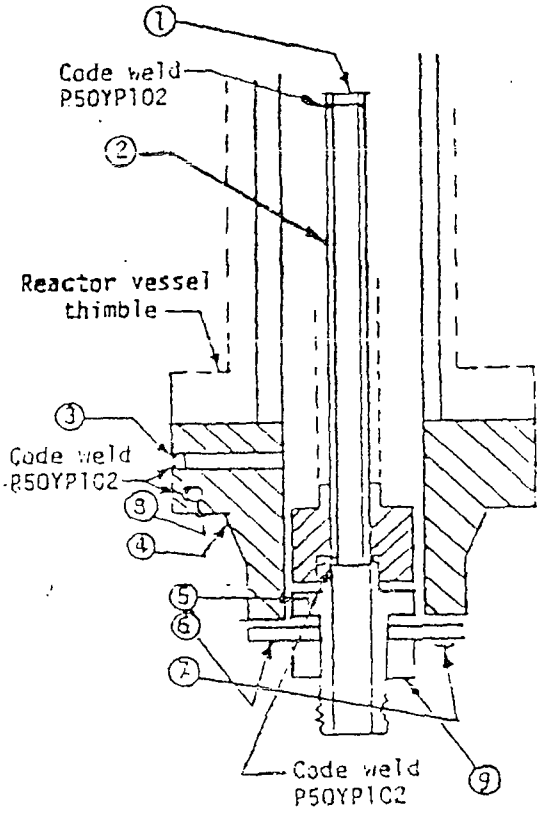

CONTROL ROD DRIVE
DWG - 768E534

9. Nut 137C5934P1
XM-19 SA479
1.20 thick x 2.62 dia.

05116

FORM N-2 NPT CERTIFICATE HOLDERS' DATA REPORT FOR NUCLEAR PART AND APPURTENANCES*

As required by the Provision of the ASME Code Rules, Section III, Div. 1

1. (a) Manufactured by General Electric Company, Castle Hayne Rd., Wilmington, N.C.
(Name and address of NPT Certificate Holder)

(b) Manufactured for General Electric Company, San Jose, California (NEDG)
(Name and address of N Certificate Holder for completed nuclear component)

2. Identification-Certificate Holder's Serial No. of Part A5510 Nat'l Bd. No.

(a) Constructed According to Drawing No. 768E534G001 Drawing Prepared by D. L. Paterson

(b) Description of Part Inspected Control Rod Drive, Model #7RDB144DG001

(c) Applicable ASME Code: Section III, Edition 1974, Addenda date W'75, Case No. N207 1361-2 Class 1

3. Remarks: Standard part for use with Reactor. Hydrostatically tested at 1820 psi.
(Brief description of service for which component was designed)

* Total number of sheets - 2

We certify that the statements made in this report are correct and this vessel part or appurtenance as defined in the Code conforms to the rules of construction of the ASME Code Section III.
(The applicable Design Specification and Stress Report are not the responsibility of the NPT Certificate Holder for parts. An NPT Certificate Holder for appurtenances is responsible for furnishing a separate Design Specification and Stress Report if the appurtenance is not included in the component Design Specification and Stress Report.)

Date 7/23 19 81 Signed GE, NEPD-WMD-QA By J. Stoudenmire
(NPT Certificate Holder)

Certificate of Authorization Expires September 15, 1981 Certificate of Authorization No. NPT N-1151

CERTIFICATION OF DESIGN FOR APPURTENANCE (when applicable)

Design information on file at GE, NEPD-WMD-QA, Castle Hayne Rd., Wilmington, N.C.
22A5556, Rev. 2

Stress analysis report on file at GE, NEPD-WMD-QA, Castle Hayne Rd., Wilmington, N.C.
22A4912, Rev. 2

Design specifications certified by B. N. Sridhar Prof. Eng. State Calif Reg. No. 18345

Stress analysis report certified by B. N. Sridhar Prof. Eng. State Calif Reg. No. 18345

CERTIFICATE OF SHOP INSPECTION

I, the undersigned, holding a valid commission issued by the National Board of Boiler and Pressure Vessel Inspectors and/or the State or Province of North Carolina and employed by Department of Labor of State of North Carolina have inspected the part of a pressure vessel described in this Partial Data Report on 7/23 19 81, and state that to the best of my knowledge and belief, the NPT Certificate Holder has constructed this part in accordance with the ASME Code Section III.

By signing this certificate, neither the inspector nor his employer makes any warranty, expressed or implied, concerning the part described in this Partial Data Report. Furthermore, neither the inspector nor his employer shall be liable in any manner for any personal injury or property damage or a loss of any kind arising from or connected with this inspection.

Date 7/23 19 81

Ed Skerill
(Inspector's Signature)

Commissions N.C. 723, PA WC1756, OHIO
(National Board, State, Province and No.) - 534

* Supplemental sheets in form of lists, sketches, or drawings may be used provided (1) size is 8½" x 11", (2) information in items 1 and 2 on this Data Report is included on each sheet, and (3) each sheet is numbered and number of sheets is recorded in item 3. "Remarks"

(10/77) This form (E00040) may be obtained from the Order Dept., ASME, 345 E. 47th St., New York, N.Y. 10017

Items 4–8 incl. to be completed for single wall vessels, jackets of jacketed vessels, or shells of heat exchangers.

4. Shell: Material ____ (Kind & Spec. No.) ____ T.S. ____ (Min. or Range Specified) Nominal Thickness ____ in. Corrosion Allowance ____ in. Dia. ____ ft. ____ in. Length ____ ft. ____ in.

5. Seams: Long ____ H.T.[1] ____ R.T. ____ Efficiency ____ %

Girth ____ H.T.[1] ____ R.T. ____ No. of Courses ____

6. Heads: (a) Material ____ T.S. ____ (b) Material ____ T.S. ____

Location (Top, bottom, ends)	Thickness	Crown Radius	Knuckle Radius	Elliptical Ratio	Conical Apex Angle	Hemispherical Radius	Flat Diameter	Side to Press. (Conv. or Conc.)
(a)								
(b)								

If removable, bolts used ____ (Material, Spec. No., T.S., Size, Number) Other fastening ____ (Describe or attach sketch)

7. Jacket Closure: ____ (Describe as edge weld, bar, etc. If bar give dimensions, if bolted, describe or sketch)

8. Design pressure[2] 1250 psi at 575 °F

Drop Weight ____
Charpy Impact ____ ft-lb at temp. of ____ °F

Items 9 and 10 to be completed for tube sections

9. Tube Sheets: Stationary. Material ____ (Kind & Spec. No.) Dia. ____ (Subject to pressure) Thickness ____ in. Attachment ____ (Welded, Bolted)

Floating. Material ____ Dia. ____ Thickness ____ in. Attachment ____

10. Tubes: Material ____ O.D. ____ in. Thickness ____ inches or gage. Number ____ Type ____ (Str. or U)

Items 11–14 incl. to be completed for inner chambers of jacketed vessels, or channels of heat exchangers.

11. Shell: Material ____ (Kind & Spec. No.) T.S. ____ (Min. or Range Specified) Nominal Thickness ____ in. Corrosion Allowance ____ in. Dia. ____ ft. ____ in. Length ____ ft. ____ in.

12. Seams: Long ____ H.T.[1] ____ R.T. ____ Efficiency ____ %

Girth ____ H.T.[1] ____ R.T. ____ No. of Courses ____

13. Heads: (a) Material ____ T.S. ____ (b) Material ____ T.S. ____

Location	Thickness	Crown Radius	Knuckle Radius	Elliptical Ratio	Conical Apex Angle	Hemispherical Radius	Flat Diameter	Side to Press. (Conv. or Conc.)
(a) Top, bottom, ends								
(b) Channel								

If removable, bolts used (a) ____ (b) ____ (c) ____ Other fastening ____ (Describe or attach sketch)

14. Design pressure[2] ____ psi at ____ °F

Drop Weight ____
Charpy Impact ____ ft-lb at temp. of ____ °F

Items below to be completed for all vessels where applicable.

15. Safety Valve Outlets: Number ____ Size ____ Location ____

16. Nozzles:

Purpose (Inlet, Outlet, Drain)	Number	Dia. or Size	Type	Material	Thickness	Reinforcement Material	How Attached

17. Inspection Openings: Manholes, No. ____ Size ____ Location ____
Handholes, No. ____ Size ____ Location ____
Threaded, No. ____ Size ____ Location ____

18. Supports: Skirt ____ (Yes or No) Legs ____ (Number) Lugs ____ (Number) Other ____ (Describe) Attached ____ (Where & How)

[1] If Postweld Heat-Treated.
[2] Set other internal or external pressure and corresponding temperature when applicable.

Sheet 2 of 2

21 OF 31

FORM N-2 NPT CERTIFICATE HOLDERS' DATA REPORT FOR NUCLEAR PART AND APPURTENANCES*

As required by the Provision of the ASME Code Rules, Section III, Div. 1

1. (a) Manufactured by General Electric Company, Castle Hayne Rd., Wilmington, N.C.
(Name and address of NPT Certificate Holder)

(b) Manufactured for General Electric Company, San Jose, California (NEBG)
(Name and address of N Certificate Holder for completed nuclear component)

2. Identification-Certificate Holder's Serial No. of Part A5510 Nat'l Bd. No.

(a) Constructed According to Drawing No. 768E534G001 Drawing Prepared by D. L. Peterson

(b) Description of Part Inspected Control Rod Drive, Model #7RDB144DG001

(c) Applicable ASME Code: Section III, Edition 1974, Addenda date W'75, Case No. N207 1361-2 Class 1

1. Cap 166B9274P1
(167A2343)
SA182 - F316
3/8 thick x 1 1/16 OD

2. Indicator Pipe 166B9313P1
SA312-TP316
3/4 sch 40-seamless pipe
0.113 wall thickness
1.065 max. dia.

3. Plug 159A1176P1
SA182-F304
1/4 thick x 0.812 OD

4. Flange 919D610P1 (719E474)
SA182-F304
3.37 thick x 9 5/8 OD
neck 1 1/16 thick x 5.0 OD
2.875 ID

5. Base 137C5311P1
XM-19 ASME SA479
3.9 OD x .884 ID

6. Ring Flange 114B5122P2
SA182-F304
1" thick x 5.0 OD x 1.75 ID

7. Cap Screw 117C4516P2
SA193-B6
6 ea. 1/2 dia. on 4 1/8 bolt circle

8. Plug 175A7361P1
SA182-F304
0.38 thick x 1.307 dia.

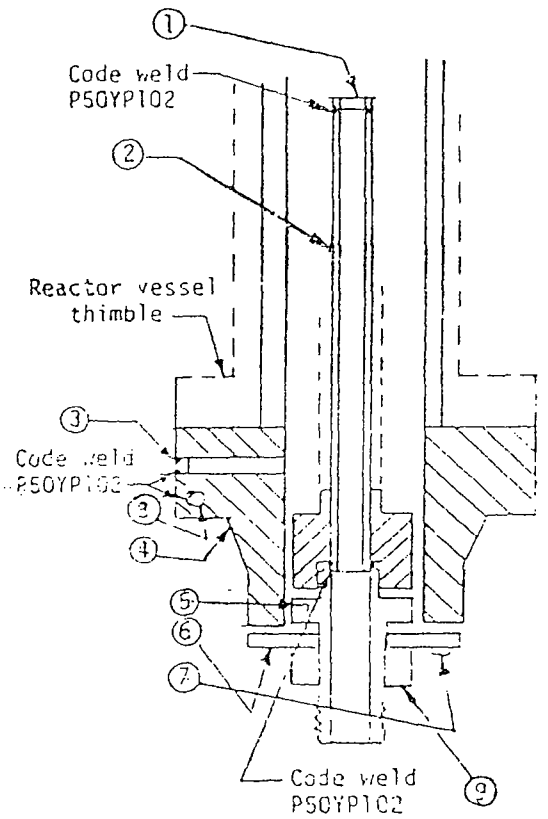

CONTROL ROD DRIVE
DWG - 768E534

9. Nut 137C5934P1
XM-19 SA479
1.30 thick x 2.62 dia.

.535

~~26 OF 35~~ 22 OF 31

FORM N-2 NPT CERTIFICATE HOLDERS' DATA REPORT FOR NUCLEAR PART AND APPURTENANCES*

As required by the Provision of the ASME Code Rules, Section III, Div. 1

1. (a) Manufactured by General Electric Company, Castle Hayne Rd., Wilmington, N.C.
(Name and address of NPT Certificate Holder)

(b) Manufactured for General Electric Company, San Jose, California (NEBG)
(Name and address of N Certificate Holder for completed nuclear component)

2. Identification-Certificate Holder's Serial No. of Part A4502 Nat'l Bd. No.

(a) Constructed According to Drawing No. 768E534G001 Drawing Prepared by D. L. Paterson

(b) Description of Part Inspected Control Rod Drive, Model #7RDB144DG001

(c) Applicable ASME Code: Section III, Edition 1974, Addenda date W'75, Case No. N207 1361-2 Class 1

3. Remarks: Standard part for use with Reactor. Hydrostatically tested at 1820 psi.
(Brief description of service for which component was designed)

* Total number of sheets - 2

We certify that the statements made in this report are correct and this vessel part or appurtenance as defined in the Code conforms to the rules of construction of the ASME Code Section III.
(The applicable Design Specification and Stress Report are not the responsibility of the NPT Certificate Holder for parts. An NPT Certificate Holder for appurtenances is responsible for furnishing a separate Design Specification and Stress Report if the appurtenance is not included in the component Design Specification and Stress Report.)

Date 7/23 19 81 Signed GE, NEPD-WMD-QA By J. Stoudemann
(NPT Certificate Holder)

Certificate of Authorization Expires September 15, 1981 Certificate of Authorization No. NPT N-1151

CERTIFICATION OF DESIGN FOR APPURTENANCE (when applicable)

Design information on file at GE, NEPD-WMD-QA, Castle Hayne Rd., Wilmington, N.C.
22A5556, Rev. 2

Stress analysis report on file at GE, NEPD-WMD-QA, Castle Hayne Rd., Wilmington, N.C.
22A4912, Rev. 2

Design specifications certified by B. N. Sridhar Prof. Eng. State Calif Reg. No. 18345

Stress analysis report certified by B. N. Sridhar Prof. Eng. State Calif Reg. No. 18345

CERTIFICATE OF SHOP INSPECTION

I, the undersigned, holding a valid commission issued by the National Board of Boiler and Pressure Vessel Inspectors and/or the State or Province of North Carolina and employed by Department of Labor of State of North Carolina have inspected the part of a pressure vessel described in this Partial Data Report on 7/23 19 81, and state that to the best of my knowledge and belief, the NPT Certificate Holder has constructed this part in accordance with the ASME Code Section III.

By signing this certificate, neither the inspector nor his employer makes any warranty, expressed or implied, concerning the part described in this Partial Data Report. Furthermore, neither the inspector nor his employer shall be liable in any manner for any personal injury or property damage or a loss of any kind arising from or connected with this inspection.

Date 7/23 19 81

(Inspector's Signature)

Commissions N.C. 723, PA.WC1766, OHIO
(National Board, State, Province and No.)

*Supplemental sheets in form of lists, sketches or drawings may be used provided (1) size is 8½" x 11", (2) information in items 1 and 2 on this Data Report is included on all sheets, and (3) each sheet is numbered and number of sheets is recorded in item 3.

00280

(10/77) This form (E00040) may be obtained from the Order Dept., ASME, 345 E. 47th St., New York, N.Y. 10017

FORM N-2 (back)

Items 4–8 incl. to be completed for single wall vessels, jackets of jacketed vessels, or shells of heat exchangers.

4. Shell: Material ____ (Kind & Spec. No.) T.S. ____ (Min. of Range Specified) Nominal Thickness ____ in. Corrosion Allowance ____ in. Dia. ____ ft. ____ in. Length ____ ft. ____ in.

5. Seams: Long ____ H.T.[1] ____ R.T. ____ Efficiency ____ %

Girth ____ H.T.[1] ____ R.T. ____ No. of Courses ____

6. Heads: (a) Material ____ T.S. ____ (b) Material ____ T.S. ____

Location (Top, bottom, ends)	Thickness	Crown Radius	Knuckle Radius	Elliptical Ratio	Conical Apex Angle	Hemispherical Radius	Flat Diameter	Side to Press. (Conv. or Conc.)
(a)								
(b)								

If removable, bolts used ____ (Material, Spec. No., T.S., Size, Number) Other fastening ____ (Describe or attach sketch)

7. Jacket Closure: ____ (Describe as edge weld, bar, etc. If bar give dimensions, if bolted, describe or sketch)

8. Design pressure[1] 1250 psi at 575 °F

Drop Weight ____
Charpy Impact ____ ft-lb
at temp. of ____ °F

Items 9 and 10 to be completed for tube sections

9. Tube Sheets: Stationary. Material ____ (Kind & Spec. No.) Dia. ____ (Subject to pressure) Thickness ____ in. Attachment ____ (Welded, Bolted)

Floating. Material ____ Dia. ____ Thickness ____ in. Attachment ____

10. Tubes: Material ____ O.D. ____ in. Thickness ____ inches or gage. Number ____ Type ____ (Str. or U)

Items 11–14 incl. to be completed for inner chambers of jacketed vessels, or channels of heat exchangers.

11. Shell: Material ____ (Kind & Spec. No.) T.S. ____ (Min. of Range Specified) Nominal Thickness ____ in. Corrosion Allowance ____ in. Dia. ____ ft. ____ in. Length ____ ft. ____ in.

12. Seams: Long ____ H.T.[1] ____ R.T. ____ Efficiency ____ %

Girth ____ H.T.[1] ____ R.T. ____ No. of Courses ____

13. Heads: (a) Material ____ T.S. ____ (b) Material ____ T.S. ____

Location	Thickness	Crown Radius	Knuckle Radius	Elliptical Ratio	Conical Apex Angle	Hemispherical Radius	Flat Diameter	Side to Press. (Conv. or Conc.)
(a) Top, bottom, ends								
(b) Channel								

If removable, bolts used (a) ____ (b) ____ (c) ____ Other fastening ____ (Describe or attach sketch)

14. Design pressure[1] ____ psi at ____ °F

Drop Weight ____
Charpy Impact ____ ft-lb
at temp. of ____ °F

Items below to be completed for all vessels where applicable.

15. Safety Valve Outlets: Number ____ Size ____ Location ____

16. Nozzles:

Purpose (Inlet, Outlet, Drain)	Number	Dia. or Size	Type	Material	Thickness	Reinforcement Material	How Attached

17. Inspection Openings: Manholes, No. ____ Size ____ Location ____
Handholes, No. ____ Size ____ Location ____
Threaded, No. ____ Size ____ Location ____

18. Supports: Skirt ____ (Yes or No) Legs ____ (Number) Lugs ____ (Number) Other ____ (Description) Attached ____ (Where & How)

[1] If Postweld Heat-Treated.
[2] Use other internal or external pressure and corresponding temperature when applicable.

~~27 of 35~~ 23 of 31

Sheet 2 of 2

FORM N-2 NPT CERTIFICATE HOLDERS' DATA REPORT FOR NUCLEAR PART AND APPURTENANCES*

As required by the Provision of the ASME Code Rules, Section III, Div. 1

1. (a) Manufactured by General Electric Company, Castle Hayne Rd., Wilmington, N.C.
(Name and address of NPT Certificate Holder)

(b) Manufactured for General Electric Company, San Jose, California (NEBG)
(Name and address of N Certificate Holder for completed nuclear component)

2. Identification-Certificate Holder's Serial No. of Part A4502 Nat'l Bd. No.

(a) Constructed According to Drawing No. 768E534G001 Drawing Prepared by D. L. Peterson

(b) Description of Part Inspected Control Rod Drive, Model #7RDB144DG001

(c) Applicable ASME Code: Section III, Edition 1974, Addenda date W'75, Case No. N207 1361-2 Class 1

1. Cap 16689274P1
(167A2343)
SA182 - F316
3/8 thick x 1 1/16 OD

2. Indicator Pipe 16689313P1
SA312-TP316
3/4 sch 40-seamless pipe
0.113 wall thickness
1.065 max. dia.

3. Plug 159A1176P1
SA182-F304
1/4 thick x 0.812 OD

4. Flange 9190610P1 (7195474)
SA182-F304
3.37 thick x 9 5/8 OD
neck 1 1/16 thick x 5.0 OD
2.875 ID

5. Base 137C5311P1
XM-19 ASME SA479
3.0 OD x .884 ID

6. Ring Flange 114B5122P2
SA182-F304
1" thick x 5.0 OD x 1.75 ID

7. Cap Screw 117C4516P2
SA193-B6
6 ea. 1/2 dia. on 4 1/8 bolt circle

8. Plug 175A7961P1
SA182-F304
0.38 thick x 1.307 dia.

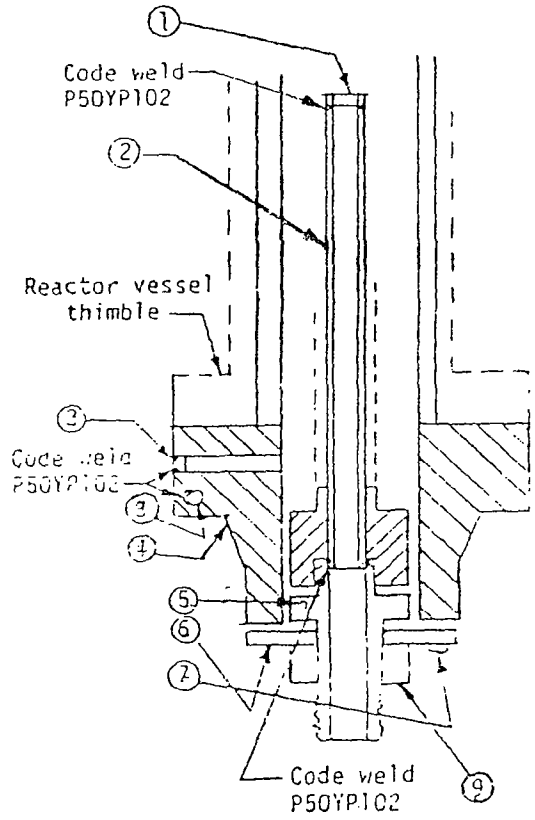

CONTROL ROD DRIVE
DWG - 768E534

9. Nut 137C5934P1
XM-19 SA479
1.30 thick x 2.62 dia.

00283

~~SHEET 28 OF 35~~ 24 OF 31

FORM N-2 NPT CERTIFICATE HOLDERS' DATA REPORT FOR NUCLEAR PART AND APPURTENANCES*

As required by the Provision of the ASME Code Rules, Section III, Div. 1

1. (a) Manufactured by General Electric Company, Castle Hayne Rd., Wilmington, N.C.
(Name and address of NPT Certificate Holder)

(b) Manufactured for General Electric Company, San Jose, California (NEBG)
(Name and address of N Certificate Holder for completed nuclear component)

2. Identification-Certificate Holder's Serial No. of Part A5472 Nat'l Bd. No.

(a) Constructed According to Drawing No. 768E534G001 Drawing Prepared by D. L. Peterson

(b) Description of Part Inspected Control Rod Drive, Model #7RDB144DG001

(c) Applicable ASME Code: Section III, Edition 1974, Addenda date W'75, Case No. N207 1361-2 Class 1

3. Remarks: Standard part for use with Reactor. Hydrostatically tested at 1820 psi.
(Brief description of service for which component was designed)

* Total number of sheets - 2

We certify that the statements made in this report are correct and this vessel part or appurtenance as defined in the Code conforms to the rules of construction of the ASME Code Section III.
(The applicable Design Specification and Stress Report are not the responsibility of the NPT Certificate Holder for parts. An NPT Certificate Holder for appurtenances is responsible for furnishing a separate Design Specification and Stress Report if the appurtenance is not included in the component Design Specification and Stress Report.)

Date 7/23 19 81 Signed GE, NEPD-WMD-QA
(NPT Certificate Holder)

Certificate of Authorization Expires September 15, 1981 Certificate of Authorization No. NPT N-1151

CERTIFICATION OF DESIGN FOR APPURTENANCE (when applicable)

Design information on file at GE, NEPD-WMD-QA, Castle Hayne Rd., Wilmington, N.C.
22A5556, Rev. 2

Stress analysis report on file at GE, NEPD-WMD-QA, Castle Hayne Rd., Wilmington, N.C.
22A4912, Rev. 2

Design specifications certified by B. N. Sridhar Prof. Eng. State Calif Reg. No. 13345

Stress analysis report certified by B. N. Sridhar Prof. Eng. State Calif Reg. No. 13345

CERTIFICATE OF SHOP INSPECTION

I, the undersigned, holding a valid commission issued by the National Board of Boiler and Pressure Vessel Inspectors and/or the State or Province of North Carolina and employed by Department of Labor of State of North Carolina have inspected the part of a pressure vessel described in this Partial Data Report on 7/23 19 81, and state that to the best of my knowledge and belief, the NPT Certificate Holder has constructed this part in accordance with the ASME Code Section III.

By signing this certificate, neither the inspector nor his employer makes any warranty, expressed or implied, concerning the part described in this Partial Data Report. Furthermore, neither the Inspector nor his employer shall be liable in any manner for any personal injury or property damage or a loss of any kind arising from or connected with this inspection.

Date 7/23 19 81

E. L. Merrill
(Inspector's Signature)

Commissions N.C. 723 PA WC1766 OHIO
(National Board, State, Province and No.)

0C864

* Supplementary sheets in form of lists, sketches or drawings may be used provided: (1) size is 8½ x 11, (2) information in items 1 thru 3 on this Data Report is included on each sheet, and (3) each sheet is numbered and number of sheets is recorded in item 3.

(10/77) This form (E00040) may be obtained from the Order Dept., ASME, 345 E. 47th St., New York, N.Y. 10017

FORM N-2 (back)

Items 4–8 incl. to be completed for single wall vessels, jackets of jacketed vessels, or shells of heat exchangers.

4. Shell: Material ____ (Kind & Spec. No.) T.S. ____ (Min. of Range Specified) Nominal Thickness ____ in. Corrosion Allowance ____ in. Dia. ____ ft. ____ in. Length ____ ft. ____ in.

5. Seams: Long ____ H.T.[1] ____ R.T. ____ Efficiency ____ %

Girth ____ H.T.[1] ____ R.T. ____ No. of Courses ____

6. Heads: (a) Material ____ T.S. ____ (b) Material ____ T.S. ____

Location (Top, bottom, ends)	Thickness	Crown Radius	Knuckle Radius	Elliptical Ratio	Conical Apex Angle	Hemispherical Radius	Flat Diameter	Side to Press. (Conv. or Conc.)
(a)								
(b)								

If removable, bolts used ____ (Material, Spec. No., T.S., Size, Number) Other fastening ____ (Describe or attach sketch)

7. Jacket Closure: ____ (Describe as edge weld, bar, etc. If bar give dimensions, if bolted, describe or sketch)

8. Design pressure[2] 1250 psi at 575 °F

Drop Weight ____
Charpy Impact ____ ft-lb
at temp. of ____ °F

Items 9 and 10 to be completed for tube sections

9. Tube Sheet: Stationary. Material ____ (Kind & Spec. No.) Dia. ____ (Subject to pressure) Thickness ____ in. Attachment ____ (Welded, Bolted)

Floating. Material ____ Dia. ____ Thickness ____ in. Attachment ____

10. Tubes: Material ____ O.D. ____ in. Thickness ____ inches or gage. Number ____ Type ____ (Str. or U)

Items 11–14 incl. to be completed for inner chambers of jacketed vessels, or channels of heat exchangers.

11. Shell: Material ____ T.S. ____ Nominal Thickness ____ in. Corrosion Allowance ____ in. Dia. ____ ft. ____ in. Length ____ ft. ____ in.

12. Seams: Long ____ H.T.[1] ____ R.T. ____ Efficiency ____ %

Girth ____ H.T.[1] ____ R.T. ____ No. of Courses ____

13. Heads: (a) Material ____ T.S. ____ (b) Material ____ T.S. ____

Location	Thickness	Crown Radius	Knuckle Radius	Elliptical Ratio	Conical Apex Angle	Hemispherical Radius	Flat Diameter	Side to Press. (Conv. or Conc.)
(a) Top, bottom, ends								
(b) Channel								

If removable, bolts used (a) ____ (b) ____ (c) ____ Other fastening ____ (Describe or attach sketch)

14. Design pressure[2] ____ psi at ____ °F

Drop Weight ____
Charpy Impact ____ ft-lb
at temp. of ____ °F

Items below to be completed for all vessels where applicable.

15. Safety Valve Outlets: Number ____ Size ____ Location ____

16. Nozzles:

Purpose (Inlet, Outlet, Drain)	Number	Dia. or Size	Type	Material	Thickness	Reinforcement Material	How Attached

17. Inspection Openings: Manholes, No. ____ Size ____ Location ____
Handholes, No. ____ Size ____ Location ____
Threaded, No. ____ Size ____ Location ____

18. Supports: Skirt ____ (Yes or No) Legs ____ (Number) Lugs ____ (Number) Other ____ (Describe) Attached ____ (Where & How)

[1] If Postweld Heat-Treated.
[2] Just above internal or external pressure with corresponding temperature where applicable.

~~29 of 35~~ 25 of 31

Sheet 2 of 2

FORM N-2 NPT CERTIFICATE HOLDERS' DATA REPORT FOR NUCLEAR PART AND APPURTENANCES*

As required by the Provision of the ASME Code Rules, Section III, Div. 1

1. (a) Manufactured by General Electric Company, Castle Hayne Rd., Wilmington, N.C.
(Name and address of NPT Certificate Holder)

(b) Manufactured for General Electric Company, San Jose, California (NEBG)
(Name and address of N Certificate Holder for completed nuclear component)

2. Identification-Certificate Holder's Serial No. of Part A5472 Nat'l Bd. No.

(a) Constructed According to Drawing No. 768E534G001 Drawing Prepared by D. L. Peterson

(b) Description of Part Inspected Control Rod Drive, Model #7RDB144DG001

(c) Applicable ASME Code: Section III, Edition 1974, Addenda date W'75, Case No. N207 1361-2 Class 1

1. Cap 166B9274P1
(167A2343)
SA182 - F316
3/8 thick x 1 1/16 OD

2. Indicator Pipe 166B9313P1
SA312-TP316
3/4 sch 40-seamless pipe
0.113 wall thickness
1.065 max. dia.

3. Plug 159A1176P1
SA182-F304
1/4 thick x 0.812 OD

4. Flange 919061OP1 (719E474)
SA182-F304
3.37 thick x 9 5/8 OD
neck 1 1/16 thick x 5.0 OD
2.875 ID

5. Base 137C5311P1
XM-19 ASME SA479
3.0 OD x .884 ID

6. Ring Flange 11485122P2
SA182-F304
1" thick x 5.0 OD x 1.75 ID

7. Cap Screw 117C4516P2
SA193-B6
5 ea. 1/2 dia. on 4 1/8 bolt circle

8. Plug 175A7961P1
SA182-F304
0.38 thick x 1.307 dia.

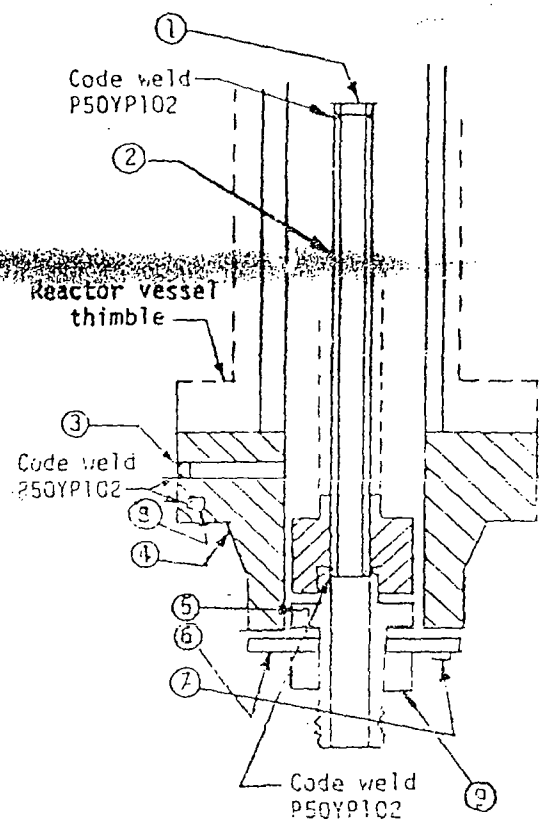

CONTROL ROD DRIVE
DWG - 768E534

9. Nut 137C5934P1
XM-19 SA479
1.30 thick x 2.62 dia.

00865

Sheet ~~30 of 35~~ 26 of 31

FORM N-2 NPT CERTIFICATE HOLDERS' DATA REPORT FOR NUCLEAR PART AND APPURTENANCES*

*As required by the Provision of the ASME Code Rules, Section III, Div. 1

1. (a) Manufactured by General Electric Company, Castle Hayne Rd., Wilmington, N.C.
(Name and address of NPT Certificate Holder)

(b) Manufactured for General Electric Company, San Jose, California (NEBG)
(Name and address of N Certificate Holder for completed nuclear component)

2. Identification-Certificate Holder's Serial No. of Part A5122 Nat'l Bd. No.

(a) Constructed According to Drawing No. 768E534G001 Drawing Prepared by D. L. Paterson

(b) Description of Part Inspected Control Rod Drive, Model #7RDB144DG001

(c) Applicable ASME Code: Section III, Edition 1974, Addenda date W'75, Code No. N207 1361-2 Class 1

3. Remarks: Standard part for use with Reactor. Hydrostatically tested at 1820 psi.
(Brief description of service for which component was designed)

* Total number of sheets - 2

We certify that the statements made in this report are correct and this vessel part or appurtenance as defined in the Code conforms to the rules of construction of the ASME Code Section III.
(The applicable Design Specification and Stress Report are not the responsibility of the NPT Certificate Holder for parts. An NPT Certificate Holder for appurtenances is responsible for furnishing a separate Design Specification and Stress Report if the appurtenance is not included in the component Design Specification and Stress Report.)

Date 2/22 19 83 Signed GE, NEBD-WHD By J. Ettrichmann
(NPT Certificate Holder)

Certificate of Authorization Expires June 16, 1984 Certificate of Authorization No. NPT N-1151

CERTIFICATION OF DESIGN FOR APPURTENANCE (when applicable)

Design information on file at GENERAL ELECTRIC CO., SAN JOSE, CALIFORNIA
22A5556, Rev. 2

Stress analysis report on file at GENERAL ELECTRIC CO., SAN JOSE, CALIFORNIA
22A4912, Rev. 2

Design specifications certified by B. N. Sridhar Prof. Eng. State Calif Reg. No. 18345

Stress analysis report certified by B. N. Sridhar Prof. Eng. State Calif Reg. No. 18345

CERTIFICATE OF SHOP INSPECTION

I, the undersigned, holding a valid commission issued by the National Board of Boiler and Pressure Vessel Inspectors and/or the State or Province of North Carolina and employed by Department of Labor of State of North Carolina have inspected the part of a pressure vessel described in this Partial Data Report on 2/22 19 83 and state that to the best of my knowledge and belief, the NPT Certificate Holder has constructed this part in accordance with the ASME Code Section III.

By signing this certificate, neither the Inspector nor his employer makes any warranty, expressed or implied, concerning the part described in this Partial Data Report. Furthermore, neither the Inspector nor his employer shall be liable in any manner for any personal injury or property damage or a loss of any kind arising from or connected with this inspection.

Date 2/22 19 83

E. H. Merrill
Inspector's Signature

Commissions N.C. 723, PA WC1756, OHIO
National Board, State, Province and No.

*Supplemental sheets in form of lists, sketches or drawings may be used provided (1) size is 8½" x 11", (2) information in items 1-4 on this Data Report is included on each sheet, and (3) each sheet is numbered and the number of sheets is recorded in item 3, "Remarks".

(10/77) This form (E00040) may be obtained from the Order Dept., ASME, 345 E. 47th St., New York, N.Y. 10017

FORM N-2 (back)

Items 4–8 incl. to be completed for single wall vessels, jackets of jacketed vessels, or shells of heat exchangers.

4. Shell: Material _____ (Kind & Spec. No.) T.S. _____ (Min. of Range Specified) Nominal Thickness ____ in. Corrosion Allowance ____ in. Dia. ____ ft. ____ in. Length ____ ft. ____ in.

5. Seams: Long _____ H.T.[1] _____ R.T. _____ Efficiency _____ %

Girth _____ H.T.[1] _____ R.T. _____ No. of Courses _____

6. Heads: (a) Material _____ T.S. _____ (b) Material _____ T.S. _____

Location (Top, bottom, ends)	Thickness	Crown Radius	Knuckle Radius	Elliptical Ratio	Conical Apex Angle	Hemispherical Radius	Flat Diameter	Side to Press. (Conv. or Conc.)
(a)								
(b)								

If removable, bolts used _____ (Material, Spec. No., T.S., Size, Number) Other fastening _____ (Describe or attach sketch)

7. Jacket Closure: _____ (Describe as seam and weld, bar, etc. If bar give dimensions, if bolted, describe or sketch)

8. Design pressure[2] 1250 psi at 575 °F

Drop Weight _____
Charpy Impact _____ ft-lb
at temp. of _____ °F

Items 9 and 10 to be completed for tube sections

9. Tube Sheets: Stationary. Material _____ (Kind & Spec. No.) Dia. _____ (Subject to pressure) Thickness ____ in. Attachment _____ (Welded, Bolted)

Floating. Material _____ Dia. _____ Thickness ____ in. Attachment _____

10. Tubes: Material _____ O.D. ____ in. Thickness _____ inches or gage. Number _____ Type _____ (Str. or U)

Items 11–14 incl. to be completed for inner chambers of jacketed vessels, or channels of heat exchangers.

11. Shell: Material _____ (Kind & Spec. No.) T.S. _____ (Min. of Range Specified) Nominal Thickness ____ in. Corrosion Allowance ____ in. Dia. ____ ft. ____ in. Length ____ ft. ____ in.

12. Seams: Long _____ H.T.[1] _____ R.T. _____ Efficiency _____ %

Girth _____ H.T.[1] _____ R.T. _____ No. of Courses _____

13. Heads: (a) Material _____ T.S. _____ (b) Material _____ T.S. _____

Location	Thickness	Crown Radius	Knuckle Radius	Elliptical Ratio	Conical Apex Angle	Hemispherical Radius	Flat Diameter	Side to Press. (Conv. or Conc.)
(a) Top, bottom, ends								
(b) Channel								

If removable, bolts used (a) _____ (b) _____ (c) _____ Other fastening _____ (Describe or attach sketch)

14. Design pressure[1] _____ psi at _____ °F

Drop Weight _____
Charpy Impact _____ ft-lb
at temp. of _____ °F

Items below to be completed for all vessels where applicable.

15. Safety Valve Outlets: Number _____ Size _____ Location _____

16. Nozzles:

Purpose (Inlet, Outlet, Drain)	Number	Dia. or Size	Type	Material	Thickness	Reinforcement Material	How Attached

17. Inspection Openings: Manholes, No. _____ Size _____ Location _____
Handholes, No. _____ Size _____ Location _____
Threaded, No. _____ Size _____ Location _____

18. Supports: Skirt _____ (Yes or No) Lugs _____ (Number) Legs _____ (Number) Other _____ (Describe) Attached _____ (Where & How)

Sheet 2 of 2 27 OF 31

FORM N-3 NPT CERTIFICATE HOLDERS' DATA REPORT FOR NUCLEAR PART AND APPURTENANCES*
As required by the Provision of the ASME Code Rules, Section III, Div. 1

1. (a) Manufactured by General Electric Company, Castle Hayne Rd., Wilmington, N.C.
(Name and address of NPT Certificate Holder)

(b) Manufactured for General Electric Company, San Jose, California (NEBG)
(Name and address of N Certificate Holder for completed nuclear component)

2. Identification-Certificate Holder's Serial No. of Part A5122 Nat'l Bd. No.

(a) Constructed According to Drawing No. 768E534G001 Drawing Prepared by D. L. Peterson

(b) Description of Part Inspected Control Rod Drive, Model #7RDB144DG001

(c) Applicable ASME Code: Section III, Edition 1974, Addenda date W'75, Case No. N207 1361-2 Class 1

1. Cap 166B9274P1
(167A2343)
SA182 - F316
3/8 thick x 1 1/16 OD

2. Indicator Pipe 166B9313P1
SA312-TP316
3/4 sch 40-seamless pipe
0.113 wall thickness
1.065 max. dia.

3. Plug 159A1176P1
SA182-F304
1/4 thick x 0.812 OD

4. Flange 9190610P1 (719E474)
SA182-F304
3.37 thick x 9 5/8 OD
neck 1 1/16 thick x 5.0 OD
2.875 ID

5. Base 137C5311P1
XM-19 ASME SA479
3.0 OD x .884 ID

6. Ring Flange 11485122P2
SA182-F304
1" thick x 5.0 OD x 1.75 ID

7. Cap Screw 117C4516P2
SA193-B6
6 ea. 1/2 dia. on 4 1/8 bolt circle

8. Plug 175A7961P1
SA182-F304
0.38 thick x 1.307 dia.

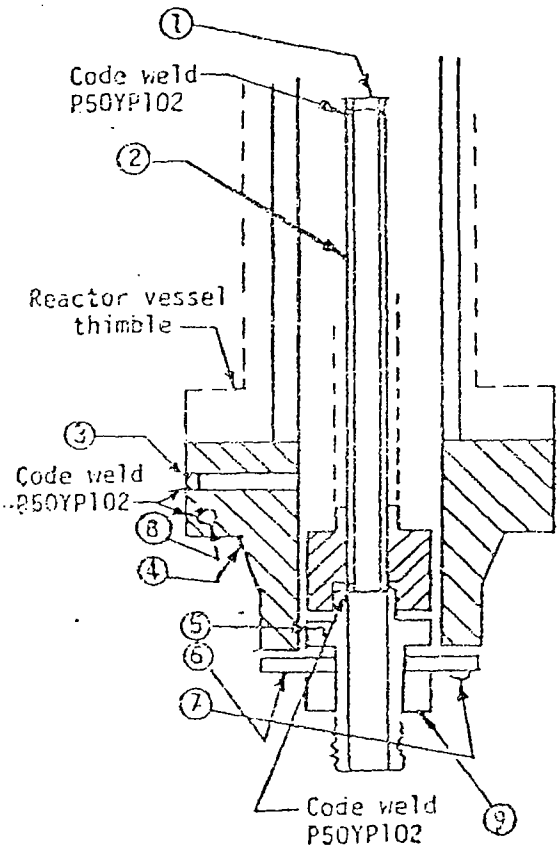

CONTROL ROD DRIVE
DWG - 768E534

9. Nut 137C5934P1
XM-19 SA479
1.30 thick x 2.62 dia.

~~32 OF 35~~

Sheet 1 of 2 28 OF 31

FORM N-2 NPT CERTIFICATE HOLDERS' DATA REPORT FOR NUCLEAR PART AND APPURTENANCES*

As required by the Provision of the ASME Code Rules, Section III, Div. 1

1. (a) Manufactured by General Electric Company, Castle Hayne Rd., Wilmington, N.C.
(Name and address of NPT Certificate Holder)

(b) Manufactured for General Electric Company, San Jose, California (NEBG)
(Name and address of N Certificate Holder for completed nuclear component)

2. Identification-Certificate Holder's Serial No. of Part A4531 Nat'l Bd. No.

(a) Constructed According to Drawing No. 768E534G001 Drawing Prepared by D. L. Paterson

(b) Description of Part Inspected Control Rod Drive, Model #7RDB144DG001

(c) Applicable ASME Code: Section III, Edition 1974, Addenda date W'75, Case No. N207 1361-2 Class 1

3. Remarks: Standard part for use with Reactor. Hydrostatically tested at 1820 psi.
(Brief description of service for which component was designed)

* Total number of sheets - 2

We certify that the statements made in this report are correct and this vessel part or appurtenance as defined in the Code conforms to the rules of construction of the ASME Code Section III.
(The applicable Design Specification and Stress Report are not the responsibility of the NPT Certificate Holder for parts. An NPT Certificate Holder for appurtenances is responsible for furnishing a separate Design Specification and Stress Report if the appurtenance is not included in the component Design Specification and Stress Report.)

Date 5/1 19 81 Signed GE, NEPD-WMD-QA By J. Stroedemann
(NPT Certificate Holder)

Certificate of Authorization Expires June 16, 1981 Certificate of Authorization No. NPT N-1151

CERTIFICATION OF DESIGN FOR APPURTENANCE (when applicable)

Design information on file at GE, NEPD-WMD-QA, Castle Hayne Rd., Wilmington, N.C.
22A5556, Rev. 1

Stress analysis report on file at GE, NEPD-WMD-QA, Castle Hayne Rd., Wilmington, N.C.
22A4912, Rev. 2

Design specifications certified by B. N. Sridhar Prof. Eng. State Calif Reg. No. 18345

Stress analysis report certified by B. N. Sridhar Prof. Eng. State Calif Reg. No. 18345

CERTIFICATE OF SHOP INSPECTION

I, the undersigned, holding a valid commission issued by the National Board of Boiler and Pressure Vessel Inspectors and/or the State or Province of North Carolina and employed by Department of Labor of State of North Carolina have inspected the part of a pressure vessel described in this Partial Data Report on 5/1 19 81 and state that to the best of my knowledge and belief, the NPT Certificate Holder has constructed this part in accordance with the ASME Code Section III.

By signing this certificate, neither the Inspector nor his employer makes any warranty, expressed or implied, concerning the part described in this Partial Data Report. Furthermore, neither the Inspector nor his employer shall be liable in any manner for any personal injury or property damage or a loss of any kind arising from or connected with this inspection.

Date 5/1 19 81

E. R. Sherrill
Inspector's Signature

Commissions N.C. 723, PA.WC1766, OHIO
National Board, State, Province and No.

* Supplemental sheets in form of lists, sketches or drawings may be used provided (1) size is 8½" x 11", (2) information in Items 1-2 on this Data Report is included on each sheet, and (3) each sheet is numbered and number of sheets is recorded in Item 3, "Remarks"

00436

(10/77) This form (E00040) may be obtained from the Order Dept., ASME, 345 E. 47th St., New York, N.Y. 10017

FORM N-2 (back)

Items 4–8 incl. to be completed for single wall vessels, jackets of jacketed vessels, or shells of heat exchangers.

4. Shell: Material _____ (Kind & Spec. No.) T.S. _____ (Min. of Range Specified) Nominal Thickness ____ in. Corrosion Allowance ____ in. Dia. ____ ft. ____ in. Length ____ ft. ____ in.

5. Seams: Long _____ H.T.[1] _____ R.T. _____ Efficiency _____ %

Girth _____ H.T.[1] _____ R.T. _____ No. of Courses _____

6. Heads: (a) Material _____ T.S. _____ (b) Material _____ T.S. _____

Location (Top, bottom, ends)	Thickness	Crown Radius	Knuckle Radius	Elliptical Ratio	Conical Apex Angle	Hemispherical Radius	Flat Diameter	Side to Press. (Conv. or Conc.)
(a)								
(b)								

If removable, bolts used _____ (Material, Spec. No., T.S., Size, Number) Other fastening _____ (Describe or attach sketch)

7. Jacket Closure: _____ (Describe as ogee and weld, bar, etc. If bar give dimensions, if bolted, describe or sketch)

8. Design pressure[2] 1250 psi at 575 °F Drop Weight _____ Charpy Impact _____ ft-lb at temp. of _____ °F

Items 9 and 10 to be completed for tube sections.

9. Tube Sheets: Stationary. Material _____ (Kind & Spec. No.) Dia. _____ (Subject to pressure) Thickness ____ in. Attachment _____ (Welded, Bolted)

Floating. Material _____ Dia. _____ Thickness ____ in. Attachment _____

10. Tubes: Material _____ O.D. ____ in. Thickness _____ inches or gage. Number _____ Type _____ (Str. or U)

Items 11–14 incl. to be completed for inner chambers of jacketed vessels, or channels of heat exchangers.

11. Shell: Material _____ (Kind & Spec. No.) T.S. _____ (Min. of Range Specified) Nominal Thickness ____ in. Corrosion Allowance ____ in. Dia. ____ ft. ____ in. Length ____ ft. ____ in.

12. Seams: Long _____ H.T.[1] _____ R.T. _____ Efficiency _____ %

Girth _____ H.T.[1] _____ R.T. _____ No. of Courses _____

13. Heads (a) Material _____ T.S. _____ (b) Material _____ T.S. _____

Location	Thickness	Crown Radius	Knuckle Radius	Elliptical Ratio	Conical Apex Angle	Hemispherical Radius	Flat Diameter	Side to Press. (Conv. or Conc.)
(a) Top, bottom, ends								
(b) Channel								

If removable, bolts used (a) _____ (b) _____ (c) _____ Other fastening _____ (Describe or attach sketch)

14. Design pressure[2] _____ psi at _____ °F Drop Weight _____ Charpy Impact _____ ft-lb at temp. of _____ °F

Items below to be completed for all vessels where applicable.

15. Safety Valve Outlets: Number _____ Size _____ Location _____

16. Nozzles:

Purpose (Inlet, Outlet, Drain)	Number	Dia. or Size	Type	Material	Thickness	Reinforcement Material	How Attached

17. Inspection Openings: Manholes, No. _____ Size _____ Location _____
Handholes, No. _____ Size _____ Location _____
Threaded, No. _____ Size _____ Location _____

18. Supports: Skirt _____ (Yes or No) Lugs _____ (Number) Legs _____ (Number) Other _____ (Describe) Attached _____ (Where & How)

[1] If Postweld Heat-Treated.
[2] List other internal or external pressure with coincident temperature when applicable.

~~33 of 35~~ 29 of 31

FORM N-2 NPT CERTIFICATE HOLDERS' DATA REPORT FOR NUCLEAR PART AND APPURTENANCES*

As required by the Provision of the ASME Code Rules, Section III, Div. 1

1. (a) Manufactured by General Electric Company, Castle Hayne Rd., Wilmington, N.C.
(Name and address of NPT Certificate Holder)

(b) Manufactured for General Electric Company, San Jose, California (NEBG)
(Name and address of N Certificate Holder for completed nuclear component)

2. Identification-Certificate Holder's Serial No. of Part A4531 Nat'l Bd. No.

(a) Constructed According to Drawing No. 768E534G001 Drawing Prepared by D. L. Peterson

(b) Description of Part Inspected Control Rod Drive, Model #7RDB144DG001

(c) Applicable ASME Code: Section III, Edition 1974, Addenda date W'75, Case No. N207 1361-2 Class 1

1. Cap 166B9274P1
(167A2343)
SA182 - F316
3/8 thick x 1 1/15 OD

2. Indicator Pipe 166B9313P1
SA312-TP316
3/4 sch 40-seamless pipe
0.113 wall thickness
1.065 max. dia.

3. Plug 159A1176P1
SA182-F304
1/4 thick x 0.812 OD

4. Flange 919D610P1 (719E474)
SA182-F304
3.37 thick x 9 5/8 OD
neck 1 1/16 thick x 5.0 OD
2.875 ID

5. Base 137C5311P1
XM-19 ASME SA479
3.0 OD x .884 ID

6. Ring Flange 114B5122P2
SA182-F304
1" thick x 5.0 OD x 1.75 ID

7. Cap Screw 117C4516P2
SA193-B6
6 ea. 1/2 dia. on 4 1/8 bolt circle

8. Plug 175A7961P1
SA182-F304
0.38 thick x 1.307 dia.

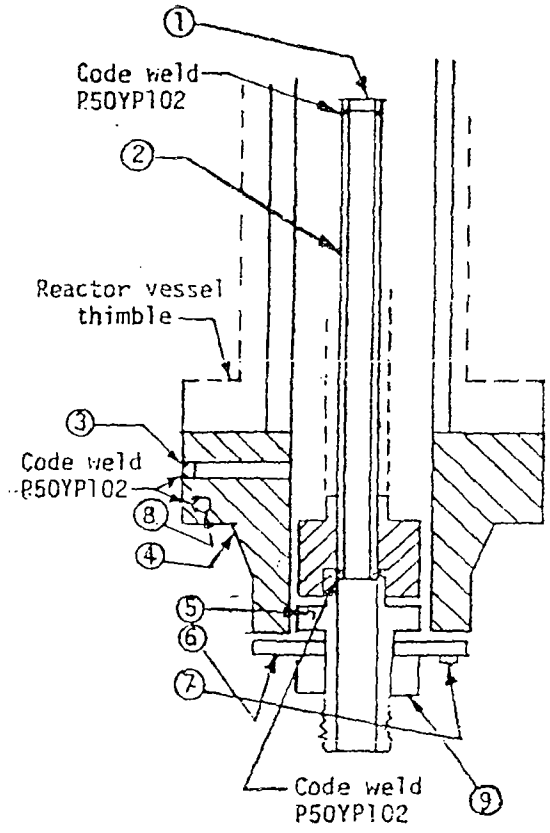

CONTROL ROD DRIVE
DWG - 768E534

9. Nut 137C5934P1
XM-19 SA479
1.30 thick x 2.62 dia.

00437

34 OF 35

30 OF 31

FORM N-2 NPT CERTIFICATE HOLDERS' DATA REPORT FOR NUCLEAR PART AND APPURTENANCES*

As required by the Provision of the ASME Code Rules, Section III, Div. 1

1. (a) Manufactured by General Electric Company, Castle Hayne Rd., Wilmington, N.C.
(Name and address of NPT Certificate Holder)

(b) Manufactured for General Electric Company, San Jose, California (NEBG)
(Name and address of N Certificate Holder for completed nuclear component)

2. ~~Manufacturer~~ Certificate Holder's Serial No. of Part A5054 Nat'l Bd. No.

(a) Constructed According to Drawing No. 768E534G001 Drawing Prepared by D. L. Paterson

(b) Description of Part Inspected Control Rod Drive, Model #7RDB144DG001

(c) Applicable ASME Code: Section III, Edition 1974, Addenda date W'75, Case No. N207 1361-2 Class 1

3. Remarks Standard part for use with Reactor. Hydrostatically tested at 1820 psi.
(Brief description of service for which component was designed)

* Total number of sheets - 2

We certify that the statements made in this report are correct and this vessel part or appurtenance as defined in the Code conforms to the rules of construction of the ASME Code Section III.
(The applicable Design Specification and Stress Report are not the responsibility of the NPT Certificate Holder for parts. An NPT Certificate Holder for appurtenances is responsible for furnishing a separate Design Specification and Stress Report if the appurtenance is not included in the component Design Specification and Stress Report.)

Date 12/30 19 80 Signed GE, NEPD-WMD-QA By [signature]
(NPT Certificate Holder)

Certificate of Authorization Expires June 16, 1981 Certificate of Authorization No. NPT N-1151

CERTIFICATION OF DESIGN FOR APPURTENANCE (when applicable)

Design information on file at GE, NEPD-WMD-QA, Castle Hayne Rd., Wilmington, N.C.
22A5556, Rev. 1

Stress analysis report on file at GE, NEPD-WMD-QA, Castle Hayne Rd., Wilmington, N.C.
22A4912, Rev. 2

Design specifications certified by B. N. Sridhar Prof. Eng. State Calif Reg. No. 18345

Stress analysis report certified by B. N. Sridhar Prof. Eng. State Calif Reg. No. 18345

CERTIFICATE OF SHOP INSPECTION

I, the undersigned, holding a valid commission issued by the National Board of Boiler and Pressure Vessel Inspectors and/or the State or Province of North Carolina and employed by Department of Labor of State of North Carolina have inspected the part of a pressure vessel described in this Partial Data Report on 12/30 19 80 and state that to the best of my knowledge and belief, the NPT Certificate Holder has constructed this part in accordance with the ASME Code Section III.

By signing this certificate, neither the Inspector nor his employer makes any warranty, expressed or implied, concerning the part described in this Partial Data Report. Furthermore, neither the Inspector nor his employer shall be liable in any manner for any personal injury or property damage or a loss of any kind arising from or connected with this inspection.

Date 12/30 19 80

[signature]
Inspector's Signature

Commissions NC 779, PA WC2L60, OHIO
National Board, State, Province and No.

00745

*Supplemental sheets in form of lists, sketches or drawings may be used provided (1) size is 8½" x 11", (2) information in items 1-2 on this Data Report is included on each sheet, and (3) each sheet is numbered and number of sheets is recorded in line 3. "Remarks"

(877) This form (E00040) may be obtained from the Order Dept. ASME, 345 E. 47th St., New York, N.Y. 10017

FORM N-2 (back)

Items 4–8 incl. to be completed for single wall vessels, jackets of jacketed vessels, or shells of heat exchangers.

4. Shell: Material _____ (Kind & Spec. No.) T.S. _____ Nominal Thickness ____ in. (Min. of Range Specified) Corrosion Allowance ____ in. Dia. ____ ft. ____ in. Length ____ ft. ____ in.

5. Seams: Long _____ H.T.[1] _____ R.T. _____ Efficiency _____ %

Girth _____ H.T.[1] _____ R.T. _____ No. of Courses _____

6. Heads: (a) Material _____ T.S. _____ (b) Material _____ T.S. _____

Location (Top, bottom, ends)	Thickness	Crown Radius	Knuckle Radius	Elliptical Ratio	Conical Apex Angle	Hemispherical Radius	Flat Diameter	Side to Press. (Conv. or Conc.)
(a)								
(b)								

If removable, bolts used _____ (Material, Spec. No., T.S., Size, Number) Other fastening _____ (Describe or attach sketch)

7. Jacket Closure: _____ (Describe as edge and weld, bar, etc. If bar give dimensions, if bolted, describe or sketch)

8. Design pressure[2] 1250 psi at 575 °F

Drop Weight _____
Charpy Impact _____ ft-lb
at temp. of _____ °F

Items 9 and 10 to be completed for tube sections

9. Tube Sheets: Stationary. Material _____ (Kind & Spec. No.) Dia. _____ (Subject to pressure) Thickness ____ in. Attachment _____ (Welded, Bolted)

Floating. Material _____ Dia. _____ Thickness ____ in. Attachment _____

10. Tubes: Material _____ O.D. ____ in. Thickness _____ inches or gage. Number _____ Type _____ (Str. or U)

Items 11–14 incl. to be completed for inner chambers of jacketed vessels, or channels of heat exchangers.

11. Shell: Material _____ (Kind & Spec. No.) T.S. _____ Nominal Thickness ____ in. (Min. of Range Specified) Corrosion Allowance ____ in. Dia. ____ ft. ____ in. Length ____ ft. ____ in.

12. Seams: Long _____ H.T.[1] _____ R.T. _____ Efficiency _____ %

Girth _____ H.T.[1] _____ R.T. _____ No. of Courses _____

13. Heads: (a) Material _____ T.S. _____ (b) Material _____ T.S. _____

Location	Thickness	Crown Radius	Knuckle Radius	Elliptical Ratio	Conical Apex Angle	Hemispherical Radius	Flat Diameter	Side to Press. (Conv. or Conc.)
(a) Top, bottom, ends								
(b) Channel								

If removable, bolts used (a) _____ (b) _____ (c) _____ Other fastening _____ (Describe or attach sketch)

14. Design pressure[2] _____ psi at _____ °F

Drop Weight _____
Charpy Impact _____ ft-lb
at temp. of _____ °F

Items below to be completed for all vessels where applicable.

15. Safety Valve Outlets: Number _____ Size _____ Location _____

16. Nozzles:

Purpose (Inlet, Outlet, Drain)	Number	Dia. or Size	Type	Material	Thickness	Reinforcement Material	How Attached

17. Inspection Openings: Manholes, No. _____ Size _____ Location _____
Handholes, No. _____ Size _____ Location _____
Threaded, No. _____ Size _____ Location _____

18. Supports: Skirt _____ (Yes or No) Lugs _____ (Number) Legs _____ (Number) Other _____ (Described) Attached _____ (Where & How)

[1] If Postweld Heat-Treated.
[2] List other internal or external pressure with coincident temperature when applicable.

~~35 of 35~~ 31 of 31

Sheet 2 of 2

FORM N-1 NPT CERTIFICATE HOLDERS' DATA REPORT FOR NUCLEAR PART AND APPURTENANCES*

As required by the Provision of the ASME Code Rules, Section III, Div. 1

1. (a) Manufactured by General Electric Company, Castle Hayne Rd., Wilmington, N.C.
(Name and address of NPT Certificate Holder)

(b) Manufactured for General Electric Company, San Jose, California (NEBG)
(Name and address of N Certificate Holder for completed nuclear component)

2. Identification-Certificate Holder's Serial No. of Part A5054 Nat'l Bd. No.

(a) Constructed According to Drawing No. 768E534G001 Drawing Prepared by D. L. Peterson

(b) Description of Part Inspected Control Rod Drive, Model #7RDB144DG001

(c) Applicable ASME Code: Section III, Edition 1974, Addenda date W'75, Case No. N207 1361-2 Class 1

1. Cap 166B9274P1
(167A2343)
SA182 - F316
3/8 thick x 1 1/16 OD

2. Indicator Pipe 166B9313P1
SA312-TP316
3/4 sch 40-seamless pipe
0.113 wall thickness
1.065 max. dia.

3. Plug 159A1176P1
SA182-F304
1/4 thick x 0.812 OD

4. Flange 919D610P1 (719E474)
SA182-F304
3.37 thick x 9 5/8 OD
neck 1 1/16 thick x 5.0 OD
2.875 ID

5. Base 137C5311P1
XM-19 ASME SA479
3.0 OD x .884 ID

6. Ring Flange 114B5122P2
SA182-F304
1" thick x 5.0 OD x 1.75 ID

7. Cap Screw 117C4516P2
SA193-B6
6 ea. 1/2 dia. on 4 1/8 bolt circle

8. Plug 175A7961P1
SA182-F304
0.38 thick x 1.307 dia.

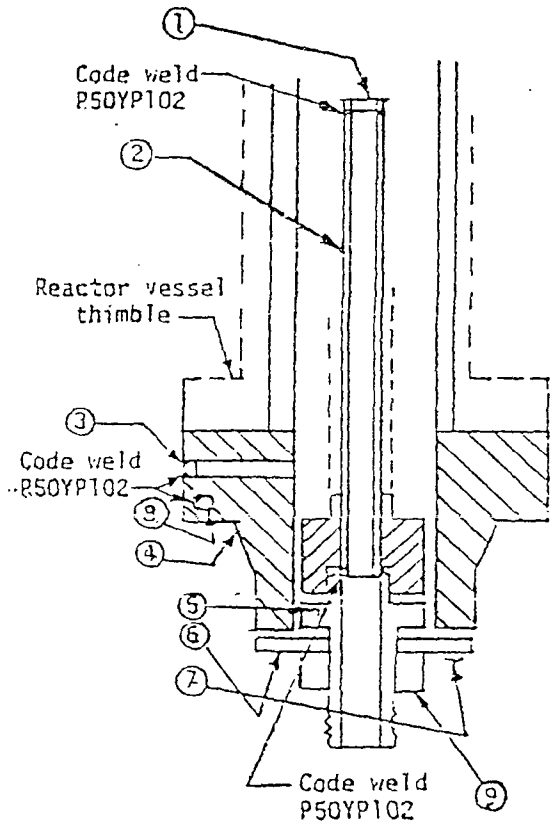

CONTROL ROD DRIVE
DWG - 768E534

9. Nut 137C5934P1
XM-19 SA479
1.30 thick x 2.62 dia.

00746

1B21-366

NIS-2/NR-1 OWNER'S REPORT FOR REPAIRS OR REPLACEMENTS

As required by the Provisions of the ASME Code Section XI

PNPP No. 9308 Rev. 9/11/00 NQI-1741

1. Owner: FIRSTENERGY CORP. Date 5-8-07
10 Center Road, Perry, Ohio 44081 Sheet 1 of 1

2. Plant: Perry Nuclear Power Plant (PNPP) Unit 1
10 Center Road, Perry, Ohio 44081 200259287
(Repair Org. P.O. No., etc.)

3. Work Performed By: FIRSTENERGY Nuclear Operating Company PNPP Type Code Symbol Stamp NR
10 Center Road, Perry, Ohio 44081 Authorization No. 33
Expiration Date 9-28-08

4. Identification of System: 1B21 Nuclear Boiler System

5. (a) Applicable Construction Code: ASME Section III - Class 1 NF ,1974 Edition
NAME/SECTION/DIVISION/CLASS

Winter 19 75 Addenda Code Case(s) 1644-4, 1728, N-272

(b) Construction Code used for repairs, modifications, or replacements: 1974 (Edition) W/75 (Addenda) N/A (Code Case(s))

(c) ASME Code Section XI applicable for Inservice Inspection: 1989 (Edition) N/A (Addenda) N/A (Code Case(s))

(d) Applicable Edition of Section XI Utilized for Repairs, Modification, or Replacements:

19 89 , N/A 19 N/A Addenda N/A (Code Case(s))

(e) Design Responsibilities FENOC

6. Identification of Components Repaired, Modified, or Replacement Components

Name of Component	Name of Manufacturer	Manufacturer Serial No.	Nat. Board No.	Other ID.	Year Built	Repair, Replacement, or Modification	ASME Code Stamped
Piping System	General Electric	1B21	64084	1B21 G7091	1985	Replacement	YES

7. Description of Work: Replace snubber SN 275 (existing) w/new snubber SN 043

8. Test Conducted: Hydrostatic- ☐ Pneumatic- ☐ Nominal Operating Pressure- ☐ Other- ☐

Pressure NA psi Test Temperature NA degrees F Code Case(s) NA

NIS-2/NR-1 OWNER'S REPORT FOR REPAIRS OR REPLACEMENTS (Back)

PNPP No. 9308 Rev. 9/11/00 NQI-1741

9. Remarks: Functional Location number 1B21G7091 was originally installed as a General Electric hanger number 1B21-G006-S107C as shown on drawing 92-0605-05033

NO NAMEPLATE/STAMPING PERFORMED DUE TO THE INTERFACE CONTROLS OF RA-2370 BEING IN EFFECT AND JURISDICTIONAL AUTHORITY CONCURRENCE HAVING BEEN RECEIVED.

Note: Attach all applicable Manufacturer's Data Reports. Supplemental sheets such as lists, sketches, or drawings may be used, provided (1) size is 8 1/2 in. x 11 in., (2) information in items 1 through 6 of this report is included on each sheet, and (3) each sheet is numbered and the number of sheets is recorded on the front of this form.

CERTIFICATE OF COMPLIANCE

I, John Messenger, certify that to the best of my knowledge and belief the statements made in this report are correct and the repair, modification or replacement of the items described above conforms to Section XI of the ASME Code and to the National Board Inspection Code "NR" rules.

National Board Certificate of Authorization No. 33 to use the "NR stamp expires 28 SEPT , 2008

Date 5-8-2007 Signed FENOC-PNPP (name of repair organization) (authorized representative) QE (title)

CERTIFICATE OF INSPECTION/INSERVICE INSPECTION

I, Thomas G. Laps, holding a valid commission issued by The National Board of Boiler and Pressure Vessel Inspectors and certificate of competency issued by the jurisdiction of OHIO and employed by HARTFORD STEAM BOILER CT. of HARTFORD, CT have inspected the repair, modification or replacement described in this report on MAY 14, 20 07 and state that to the best of my knowledge and belief, this repair, modification or replacement has been completed in accordance with Section XI of the ASME Code and the National Board Inspection Code "NR" rules.

By signing this certificate, neither the undersigned nor my employer makes any warranty, expressed or implied, concerning the work described in this report. Furthermore, neither the undersigned nor my employer shall be liable in any manner for any personal injury, property damage or loss of any kind arising from or connected with this inspection.

Date 5/14, 20 07 Signed Thomas G Laps (inspector) Commissions NB 9330 "N"I"A" Ohio Comm (National Board (include endorsements), and jurisdiction, and no.)

1 B21-367 Pg 1 of 3

NIS-2/NR-1 OWNER'S REPORT FOR REPAIRS OR REPLACEMENTS

As required by the Provisions of the ASME Code Section XI

PNPP No. 9308 Rev. 9/11/00 NQI-1741

1. Owner: FIRSTENERGY CORP. Date 5-2-07
   10 Center Road, Perry, Ohio 44081 Sheet 1 of 3

2. Plant: Perry Nuclear Power Plant (PNPP) Unit 1
   10 Center Road, Perry, Ohio 44081 200168163 & 200168164
   (Repair Org. P.O. No., etc.)

3. Work Performed By: FIRSTENERGY Nuclear Operating Company PNPP Type Code Symbol Stamp NR
   10 Center Road, Perry, Ohio 44081 Authorization No. 33
   Expiration Date 9-28-08

4. Identification of System: 1B21 Nuclear Boiler System

5. (a) Applicable Construction Code: ASME Section III - Class 1 NB ,1974 Edition
   NAME/SECTION/DIVISION/CLASS

   Winter 19 75 Addenda Code Case(s) None

   (b) Construction Code used for repairs, modifications, or replacements: 1974 (Edition) W/75 (Addenda) N/A (Code Case(s))

   (c) ASME Code Section XI applicable for Inservice Inspection: 1989 (Edition) N/A (Addenda) N/A (Code Case(s))

   (d) Applicable Edition of Section XI Utilized for Repairs, Modification, or Replacements:

   19 89 , N/A 19 N/A Addenda N/A (Code Case(s))

   (e) Design Responsibilities FENOC

6. Identification of Components Repaired, Modified, or Replacement Components

Name of Component	Name of Manufacturer	Manufacturer Serial No.	Nat. Board No.	Other ID.	Year Built	Repair, Replacement, or Modification	ASME Code Stamped
Valve	Rockwell International Corp	QA-26	665	1B21 F0032A	1981	Replacement Order 200168163	YES
Valve	Rockwell International Corp	QC-51	670	1B21 F0032B	1982	Replacement Order 200168164	YES

7. Description of Work: Remove test connection from valves for inspection and replace Ht # K5632

8. Test Conducted: Hydrostatic- ☐ Pneumatic- ☐ Nominal Operating Pressure- ☒ Other- ☐

   Pressure 1035 psi Test Temperature 78 degrees F Code Case(s) N416-2

NIS-2/NR-1 OWNER'S REPORT FOR REPAIRS OR REPLACEMENTS (Back)

PNPP No. 9308 Rev. 9/11/00 NQI-1741

9. Remarks: NONE

NO NAMEPLATE/STAMPING PERFORMED DUE TO THE INTERFACE CONTROLS OF RA-2370 BEING IN EFFECT AND JURISDICTIONAL AUTHORITY CONCURRENCE HAVING BEEN RECEIVED.

Note: Attach all applicable Manufacturer's Data Reports. Supplemental sheets such as lists, sketches, or drawings may be used, provided (1) size is 8 1/2 in. x 11 in., (2) information in items 1 through 6 of this report is included on each sheet, and (3) each sheet is numbered and the number of sheets is recorded on the front of this form.

CERTIFICATE OF COMPLIANCE

I, Russ Matthys, certify that to the best of my knowledge and belief the statements made in this report are correct and the repair, modification or replacement of the items described above conforms to Section XI of the ASME Code and to the National Board Inspection Code "NR" rules.

National Board Certificate of Authorization No. 33 to use the "NR stamp expires 28 SEPT , 2008

Date 5-2-2007 Signed FENOC-PNPP (name of repair organization) Russ Matthys (authorized representative) QC Supervisor (title)

CERTIFICATE OF INSPECTION/INSERVICE INSPECTION

I, Thomas G. Laps, holding a valid commission issued by The National Board of Boiler and Pressure Vessel Inspectors and certificate of competency issued by the jurisdiction of OHIO and employed by HARTFORD STEAM BOILER CT. of HARTFORD, CT have inspected the repair, modification or replacement described in this report on MAY 4, 20 07 and state that to the best of my knowledge and belief, this repair, modification or replacement has been completed in accordance with Section XI of the ASME Code and the National Board Inspection Code "NR" rules.

By signing this certificate, neither the undersigned nor my employer makes any warranty, expressed or implied, concerning the work described in this report. Furthermore, neither the undersigned nor my employer shall be liable in any manner for any personal injury, property damage or loss of any kind arising from or connected with this inspection.

Date 5/4, 20 07 Signed Thomas G. Laps (inspector) Commissions NB 9330 "N"I"A" Ohio Comm. (National Board (include endorsements), and jurisdiction, and no.)

As Required by the Provisions of the ASME Code, Section III, Div. 1

1. Manufactured by Rockwell International Corp., 1900 S. Saunders St., Raleigh, NC 27603
(Name and Address of N Certificate Holder)

2. Manufactured for Cleveland Electric Ill., Company, P.O. Box 500, Cleveland, Ohio 44101
(Name and Address of Purchaser or Owner)

3. Location of Installation Perry Nuclear Power Plant, Units 1 & 2, North Perry, Ohio
(Name and Address)

4. Pump or Valve Valve Nominal Inlet Size 20 (inch) Outlet Size 20 (inch)

	(a) Model No., Series No. or Type	(b) N Certificate Holder's Serial No.	(c) Canadian Registration No.	(d) Drawing No.	(e) Class	(f) Nat'l Bd. No.	(g) Year Built
(1)	7592(WCC)	QA-26	N/A	D-81-24401-15 Rev. A	1	665	1981
(2)	JNQTY						
(3)							
(4)							
(5)							
(6)							
(7)							
(8)							
(9)							
(10)							

1B21-367 Pg 2 of 3

5. Controlled Closure Check Valve
(Brief description of service for which equipment will be designed)
Rockwell S.O. 36-24401
Heat No. 4810453-122

6. Design Conditions 1510 psi (Pressure) 420 °F (Temperature) or Valve Pressure Class N/A (1)

7. Cold Working Pressure 2250 psi at 100°F

8. Pressure Retaining Pieces

Mark No.	Material Spec. No.	Manufacturer	Remarks
(a) Castings			
4810453	SA 216 Gr. WCC	Rockwell Int'l (Metal Casting Div)	Body
(b) Forgings			
116447	SA 105	Charles E. Larson	Cover
220528	SA 105	Cann & Saul Steel Company	Disk
36996	SA 638 Gr. 660T2	Charles E. Larson	Gasket Retainer
126376	SA 105	Charles E. Larson	Drain Cap (2)
116792	SA 105	Charles E. Larson	Test Fitting

DOCUMENT REVIEW BY S.O. CAL QA

(1) For manually operated valves only.

* Supplemental sheets in form of lists, sketches or drawings may be used provided (1) size is 8-1/2" x 11", (2) information in Items 1, 2 and 5 on this Data Report is included on each sheet, and (3) each sheet is numbered and number of sheets is recorded at top of this form.

(10/77) This form (E00037) may be obtained from the Order Dept., ASME, 345 E. 47th St., New York, N.Y. 10017

FORM NP-1 (Back)

Mark No.	Material Spec. No.	Manufacturer	Remarks
(c) Bolting			
N/A			
(d) Other Parts			
L23469	SA 106 Gr. B	Capital Pipe & Steel Products	Equalizer
05505	SA 106 Gr. B	Capital Pipe & Steel Products	Drain Nipple (2)

9. Hydrostatic test 3375 psi; Disk Differential test pressure 2250 psi.

CERTIFICATE OF COMPLIANCE

We certify that the statements made in this report are correct and that this pump, or valve, conforms to the rules of construction of the ASME Code for Nuclear Power Plant Components, Section III, Div. I, Edition 1974 Addenda Winter 1975 (Date), Code Case No. N/A, Date 12-30-81

Signed Rockwell International Corp. (N Certificate Holder) by [signature] Manager, Quality Assurance 12/30/81

Our ASME Certificate of Authorization No. N-1562 to use the N (Kind) symbol expires 11-26-82 (Date)

CERTIFICATION OF DESIGN

Design information on file at Rockwell International Corp., Raleigh, NC 27603

Stress analysis report (Class 1 only) on file at Rockwell International Corp., Raleigh, NC 27603

Design specifications certified by (1) Milton G. Ceplotis

PE State PA Reg No 028303-E

Stress analysis certified by (1) R.L. Clapper

PE State NC Reg. No. 10057

(1) Signature not required. List name only.

DOCUMENT CONTROL BY 5455 CALIG

CERTIFICATE OF SHOP INSPECTION

I, the undersigned, holding a valid commission issued by the National Board of Boiler and Pressure Vessel Inspectors and the State or Province of North Carolina and employed by HSBI & I Co. of Hartford, CT have inspected the pump, or valve, described in this Data Report on Dec. 22, 19 81, and state that to the best of my knowledge and belief, the N Certificate Holder has constructed this pump, or valve, in accordance with the ASME Code, Section III.

By signing this certificate, neither the Inspector nor his employer makes any warranty, expressed or implied, concerning the equipment described in this Data Report. Furthermore, neither the Inspector nor his employer shall be liable in any manner for any personal injury or property damage or a loss of any kind arising from or connected with this inspection.

Date Dec. 30, 19 81 Commissions NB8383 NC919 (Nat'l Bd., State, Prov. and No.)

FORM NPV-1 N CERTIFICATE HOLDER'S DATA REPORT FOR NUCLEAR PUMPS OR VALVES

As Required by the Provisions of the ASME Code, Section III, Div. 1

1. Manufactured by Rockwell International Corp., 1900 S. Saunders St., Raleigh, NC 27603 (Name and Address of N Certificate Holder)

2. Manufactured for Cleveland Elec. Ill. Company, P.O. Box 500, Cleveland, Ohio 44101 (Name and Address of Purchaser or Owner)

3. Location of Installation Perry Nuclear Power Plant, Units 1 & 2, North Perry, Ohio (Name and Address)

4. Pump or Valve Valve Nominal Inlet Size 20 (inch) Outlet Size 20 (inch)

	(a) Model No., Series No. or Type	(b) N Certificate Holder's Serial No.	(c) Canadian Registration No.	(d) Drawing No.	(e) Class	(f) Nat'l Bd. No.	(g) Year Built
(1)	7592(WCC)	QC-51	N/A	DB1-24401-15 Rev. A	1	670	1982
(2)	JNQTY.						
(3)							
(4)							
(5)							
(6)							
(7)							
(8)							
(9)							
(10)							

IB21 367 Pg 3 of 3

5. Controlled Closure Check Valve (Brief description of service for which equipment was designed)
Heat No. 4810433-120 Rockwell S.O. 36-24401

6. Design Conditions 1510 (Pressure) psi 420 (Temperature) °F or Valve Pressure Class N/A (1)

7. Cold Working Pressure 2250 psi at 100°F.

8. Pressure Retaining Pieces

Mark No.	Material Spec. No.	Manufacturer	Remarks
(a) Castings			
4810433	SA 216 Gr. WCC	Rockwell Int'l (Metal Casting Div.)	Body
(b) Forgings			
116447	SA 105	Charles E. Larson	Cover
10502	SA 105	Charles E. Larson	Disk
36996	SA 638 Gr. 660T2	Charles E. Larson	Gasket Retainer
126376	SA 105	Charles E. Larson	Drain Cap (2)
116792	SA 105	Charles E. Larson	Test Fitting

DOCUMENT REVIEW BY 5456 CAI/QA

(1) For manually operated valves only.

Supplemental sheets in form of lists, sketches or drawings may be used provided (1) size is 8-1/2" x 11", (2) information in items 1, 2 and 5 on this Data Report is included on each sheet, and (3) each sheet is numbered and number of sheets is recorded at top of this form.

(10/77) This form (E00037) may be obtained from the Order Dept., ASME, 345 E. 47th St., New York, N.Y. 10017

FORM NPV-1 (Back)

Mark No.	Material Spec. No.	Manufacturer	Remarks
(c) Bolting			
N/A			
(d) Other Parts			
L23469	SA 106 Gr. B	Capital Pipe & Steel Products	Equalizer
05505	SA 106 Gr. B	Capital Pipe & Steel Products	Drain Nipple (2)

9. Hydrostatic test 3375 psi. Disk Differential test pressure 2250 psi.

CERTIFICATE OF COMPLIANCE

We certify that the statements made in this report are correct and that this pump, or valve, conforms to the rules of construction of the ASME Code for Nuclear Power Plant Components, Section III, Div. 1, Edition 1974 Addenda Winter 1975 (Date) Code Case No. N/A Date 2-10-82

Signed Rockwell International Corp. (N Certificate Holder) by [signature] Manager, Quality Assurance 2/10/82

Our ASME Certificate of Authorization No. N-1562 to use the N (N) symbol expires 11/26/82 (Date)

CERTIFICATION OF DESIGN

Design information on file at Rockwell International Corp., Raleigh, NC 27603

Stress analysis report (Class 1 only) on file at Rockwell International Corp., Raleigh, NC 27603

Design specifications certified by (1) Milton G. Capiotis

PE State PA Reg. No. 028303-E

Stress analysis certified by (1) R.L. Clapper

PE State NC Reg. No. 10057

(1) Signature not required. List name only.

DOCUMENT CONTROL BY 6555 CAI/QA

CERTIFICATE OF SHOP INSPECTION

I, the undersigned, holding a valid commission issued by the National Board of Boiler and Pressure Vessel Inspectors and the State or Province of North Carolina and employed by HSBI & I Co. of Hartford, CT have inspected the pump, or valve, described in this Data Report on FEB 05, 19 82, and state that to the best of my knowledge and belief, the N Certificate Holder has constructed this pump, or valve, in accordance with the ASME Code, Section III.

5

By signing this certificate, neither the Inspector nor his employer makes any warranty, expressed or implied, concerning the equipment described in this Data Report. Furthermore, neither the Inspector nor his employer shall be liable in any manner for any personal injury or property damage or a loss of any kind arising from or connected with this inspection.

Date FEB 10 19 82 Commissions NB8383 NC919 (Nat'l Bd., State, Prov. and No.)

1B21-368

NIS-2/NR-1 OWNER'S REPORT FOR REPAIRS OR REPLACEMENTS

As required by the Provisions of the ASME Code Section XI

PNPP No. 9308 Rev. 9/11/00 NQI-1741

1. Owner: FIRSTENERGY CORP. Date 5-4-07
10 Center Road, Perry, Ohio 44081 Sheet 1 of 1

2. Plant: Perry Nuclear Power Plant (PNPP) Unit 1
10 Center Road, Perry, Ohio 44081 200261585
(Repair Org. P.O. No., etc.)

3. Work Performed By: FIRSTENERGY Nuclear Operating Company PNPP Type Code Symbol Stamp NR
10 Center Road, Perry, Ohio 44081 Authorization No. 33
Expiration Date 9-28-08

4. Identification of System: 1B21 Nuclear Boiler System

5. (a) Applicable Construction Code: ASME Section III - Class 2 NF (NAME/SECTION/DIVISION/CLASS), 1974 Edition

Winter 19 75 Addenda Code Case(s) N-224-1, N-225, N-249, N-272, N-3, N-413, N-71-6, N-71-9, N-71-11, 1728

(b) Construction Code used for repairs, modifications, or replacements: 1974 (Edition) W/75 (Addenda) N/A (Code Case(s))

(c) ASME Code Section XI applicable for Inservice Inspection: 1989 (Edition) N/A (Addenda) N/A (Code Case(s))

(d) Applicable Edition of Section XI Utilized for Repairs, Modification, or Replacements:

19 89, N/A 19 N/A Addenda N/A (Code Case(s))

(e) Design Responsibilities FENOC

6. Identification of Components Repaired, Modified, or Replacement Components

Name of Component	Name of Manufacturer	Manufacturer Serial No.	Nat. Board No.	Other ID.	Year Built	Repair, Replacement, or Modification	ASME Code Stamped
Piping System	Johnson Controls	1B21	001	1H22H27 44	1985	Replacement	YES

7. Description of Work: Replace mechanical snubber Lisega (existing SN 00614803-006) w/new Lisega snubber SN 20400002/09 3 RSM/07

8. Test Conducted: Hydrostatic- ☐ Pneumatic- ☐ Nominal Operating Pressure- ☐ Other- ☐

Pressure N/A psi Test Temperature N/A degrees F Code Case(s) N/A

NIS-2/NR-1 OWNER'S REPORT FOR REPAIRS OR REPLACEMENTS (Back)

PNPP No. 9308 Rev. 9/11/00 NQI-1741

9. Remarks: Fujnctional location number 1H22H2744 was originally installed by Johnson Controls hanger number 1H22-P027-H1122 as identified on isometric814-0605-00901. Ref: JCI final N-5 data report 1B21-0070-F

NO NAMEPLATE/STAMPING PERFORMED DUE TO THE INTERFACE CONTROLS OF RA-2370 BEING IN EFFECT AND JURISDICTIONAL AUTHORITY CONCURRENCE HAVING BEEN RECEIVED.

Note: Attach all applicable Manufacturer's Data Reports. Supplemental sheets such as lists, sketches, or drawings may be used, provided (1) size is 8 1/2 in. x 11 in., (2) information in items 1 through 6 of this report is included on each sheet, and (3) each sheet is numbered and the number of sheets is recorded on the front of this form.

CERTIFICATE OF COMPLIANCE

I, Russ Matthys, certify that to the best of my knowledge and belief the statements made in this report are correct and the repair, modification or replacement of the items described above conforms to Section XI of the ASME Code and to the National Board Inspection Code "NR" rules.

National Board Certificate of Authorization No. 33 to use the "NR stamp expires 28 SEPT , 2008

Date 5-4-2007 Signed FENOC-PNPP (name of repair organization) Russ Matthys (authorized representative) QC Supervisor (title)

CERTIFICATE OF INSPECTION/INSERVICE INSPECTION

I, Thomas G. Laps, holding a valid commission issued by The National Board of Boiler and Pressure Vessel Inspectors and certificate of competency issued by the jurisdiction of OHIO and employed by HARTFORD STEAM BOILER CT. of HARTFORD, CT have inspected the repair, modification or replacement described in this report on MAY 4, 20 07 and state that to the best of my knowledge and belief, this repair, modification or replacement has been completed in accordance with Section XI of the ASME Code and the National Board Inspection Code "NR" rules.

By signing this certificate, neither the undersigned nor my employer makes any warranty, expressed or implied, concerning the work described in this report. Furthermore, neither the undersigned nor my employer shall be liable in any manner for any personal injury, property damage or loss of any kind arising from or connected with this inspection.

Date 5/4, 20 07 Signed Thomas G. Laps (inspector) Commissions NB 9330 "N"I"A" Ohio Comm. (National Board (include endorsements), and jurisdiction, and no.)

1B21-369

NIS-2/NR-1 OWNER'S REPORT FOR REPAIRS OR REPLACEMENTS

As required by the Provisions of the ASME Code Section XI

PNPP No. 9308 Rev. 9/11/00 NQI-1741

1. Owner: FIRSTENERGY CORP. Date 5-5-07
   10 Center Road, Perry, Ohio 44081 Sheet 1 of 1

2. Plant: Perry Nuclear Power Plant (PNPP) Unit 1
   10 Center Road, Perry, Ohio 44081 200063004
   (Repair Org. P.O. No., etc.)

3. Work Performed By: FIRSTENERGY Nuclear Operating Company PNPP Type Code Symbol Stamp NR
   10 Center Road, Perry, Ohio 44081 Authorization No. 33
   Expiration Date 9-28-08

4. Identification of System: 1B21 Nuclear Boiler System

5. (a) Applicable Construction Code: ASME Section III - Class 1 NF ,1974 Edition
   NAME/SECTION/DIVISION/CLASS

   Winter 19 75 Addenda Code Case(s) 1644-5, 1728, N-32-4, N-241, N-242, N-272, N-282, N-413

   (b) Construction Code used for repairs, modifications, or replacements: 1974 (Edition) W/75 (Addenda) N/A (Code Case(s))

   (c) ASME Code Section XI applicable for Inservice Inspection: 1989 (Edition) N/A (Addenda) N/A (Code Case(s))

   (d) Applicable Edition of Section XI Utilized for Repairs, Modification, or Replacements:

   19 89 , N/A 19 N/A Addenda N/A (Code Case(s))

   (e) Design Responsibilities FENOC

6. Identification of Components Repaired, Modified, or Replacement Components

Name of Component	Name of Manufacturer	Manufacturer Serial No.	Nat. Board No.	Other ID.	Year Built	Repair, Replacement, or Modification	ASME Code Stamped
Piping System	Pullman Power	1B21	109	1B21 H0445	1985	Replacement	YES

7. Description of Work: Replace snubber SN 614001/96 (existing) w/new snubber SN 04616533/010

8. Test Conducted: Hydrostatic- ☐ Pneumatic- ☐ Nominal Operating Pressure- ☐ Other- ☐

   Pressure NA psi Test Temperature NA degrees F Code Case(s) N A

NIS-2/NR-1 OWNER'S REPORT FOR REPAIRS OR REPLACEMENTS (Back)

PNPP No. 9308 Rev. 9/11/00 NQI-1741

9. Remarks: NONE

NO NAMEPLATE/STAMPING PERFORMED DUE TO THE INTERFACE CONTROLS OF RA-2370 BEING IN EFFECT AND JURISDICTIONAL AUTHORITY CONCURRENCE HAVING BEEN RECEIVED.

Note: Attach all applicable Manufacturer's Data Reports. Supplemental sheets such as lists, sketches, or drawings may be used, provided (1) size is 8 1/2 in. x 11 in., (2) information in items 1 through 6 of this report is included on each sheet, and (3) each sheet is numbered and the number of sheets is recorded on the front of this form.

CERTIFICATE OF COMPLIANCE

I, Russ Matthys, certify that to the best of my knowledge and belief the statements made in this report are correct and the repair, modification or replacement of the items described above conforms to Section XI of the ASME Code and to the National Board Inspection Code "NR" rules.

National Board Certificate of Authorization No. 33 to use the "NR stamp expires 28 SEPT , 2008

Date 5-5-2007 Signed FENOC-PNPP (name of repair organization) Russ Matthys (authorized representative) QC Supervisor (title)

CERTIFICATE OF INSPECTION/INSERVICE INSPECTION

I, THOMAS G. LAPS, holding a valid commission issued by The National Board of Boiler and Pressure Vessel Inspectors and certificate of competency issued by the jurisdiction of OHIO and employed by HARTFORD STEAM BOILER CT. of HARTFORD, CT have inspected the repair, modification or replacement described in this report on MAY 11, 20 07 and state that to the best of my knowledge and belief, this repair, modification or replacement has been completed in accordance with Section XI of the ASME Code and the National Board Inspection Code "NR" rules.

By signing this certificate, neither the undersigned nor my employer makes any warranty, expressed or implied, concerning the work described in this report. Furthermore, neither the undersigned nor my employer shall be liable in any manner for any personal injury, property damage or loss of any kind arising from or connected with this inspection.

Date 5/11, 20 07 Signed Thomas G Laps (inspector) Commissions NB9330 " " " " NIA " OHIO COMM (National Board (include endorsements), and jurisdiction, and no.)

1B21-370

NIS-2/NR-1 OWNER'S REPORT FOR REPAIRS OR REPLACEMENTS

As required by the Provisions of the ASME Code Section XI

PNPP No. 9308 Rev. 9/11/00 NQI-1741

1. Owner: FIRSTENERGY CORP. Date 5-5-07
   10 Center Road, Perry, Ohio 44081 Sheet 1 of 1

2. Plant: Perry Nuclear Power Plant (PNPP) Unit 1
   10 Center Road, Perry, Ohio 44081 200063005
   (Repair Org. P.O. No., etc.)

3. Work Performed By: FIRSTENERGY Nuclear Operating Company PNPP Type Code Symbol Stamp NR
   10 Center Road, Perry, Ohio 44081 Authorization No. 33
   Expiration Date 9-28-08

4. Identification of System: 1B21 Nuclear Boiler System

5. (a) Applicable Construction Code: ASME Section III - Class 1 NF ,1974 Edition
   NAME/SECTION/DIVISION/CLASS

   Winter 19 75 Addenda Code Case(s) 1644-5, 1728, N-32-4, N-241, N-242, N-272, N-282, N-413

   (b) Construction Code used for repairs, modifications, or replacements: 1974 (Edition) W/75 (Addenda) N/A (Code Case(s))

   (c) ASME Code Section XI applicable for Inservice Inspection: 1989 (Edition) N/A (Addenda) N/A (Code Case(s))

   (d) Applicable Edition of Section XI Utilized for Repairs, Modification, or Replacements:

   19 89 , N/A 19 N/A Addenda N/A (Code Case(s))

   (e) Design Responsibilities FENOC

6. Identification of Components Repaired, Modified, or Replacement Components

Name of Component	Name of Manufacturer	Manufacturer Serial No.	Nat. Board No.	Other ID.	Year Built	Repair, Replacement, or Modification	ASME Code Stamped
Piping System	Pullman Power	1B21	109	1B21 H0449	1985	Replacement	YES

7. Description of Work: Replace snubber SN 614001/97 (existing) w/new snubber SN 04616533/017

8. Test Conducted: Hydrostatic- ☐ Pneumatic- ☐ Nominal Operating Pressure- ☐ Other- ☐

   Pressure NA psi Test Temperature NA degrees F Code Case(s) NA

NIS-2/NR-1 OWNER'S REPORT FOR REPAIRS OR REPLACEMENTS (Back)

PNPP No. 9308 Rev. 9/11/00 NQI-1741

9. Remarks: NONE

NO NAMEPLATE/STAMPING PERFORMED DUE TO THE INTERFACE CONTROLS OF RA-2370 BEING IN EFFECT AND JURISDICTIONAL AUTHORITY CONCURRENCE HAVING BEEN RECEIVED.

Note: Attach all applicable Manufacturer's Data Reports. Supplemental sheets such as lists, sketches, or drawings may be used, provided (1) size is 8 1/2 in. x 11 in., (2) information in items 1 through 6 of this report is included on each sheet, and (3) each sheet is numbered and the number of sheets is recorded on the front of this form.

CERTIFICATE OF COMPLIANCE

I, Russ Matthys, certify that to the best of my knowledge and belief the statements made in this report are correct and the repair, modification or replacement of the items described above conforms to Section XI of the ASME Code and to the National Board Inspection Code "NR" rules.

National Board Certificate of Authorization No. 33 to use the "NR stamp expires 28 SEPT , 2008

Date 5-5-2007 Signed FENOC-PNPP (name of repair organization) Russ Matthys (authorized representative) QC Supervisor (title)

CERTIFICATE OF INSPECTION/INSERVICE INSPECTION

I, THOMAS G. LAPS, holding a valid commission issued by The National Board of Boiler and Pressure Vessel Inspectors and certificate of competency issued by the jurisdiction of OHIO and employed by HARTFORD STEAM BOILER CT. of HARTFORD, CT have inspected the repair, modification or replacement described in this report on MAY 11, 2007 and state that to the best of my knowledge and belief, this repair, modification or replacement has been completed in accordance with Section XI of the ASME Code and the National Board Inspection Code "NR" rules.

By signing this certificate, neither the undersigned nor my employer makes any warranty, expressed or implied, concerning the work described in this report. Furthermore, neither the undersigned nor my employer shall be liable in any manner for any personal injury, property damage or loss of any kind arising from or connected with this inspection.

Date 5/11, 20 07 Signed Thomas G. Laps (inspector) Commissions NB9330 "N" "I" "A" OHIO COMM. (National Board (include endorsements), and jurisdiction, and no.)

1B21-371

NIS-2/NR-1 OWNER'S REPORT FOR REPAIRS OR REPLACEMENTS

As required by the Provisions of the ASME Code Section XI

PNPP No. 9308 Rev. 9/11/00 NQI-1741

1. Owner: FIRSTENERGY CORP. Date 5-5-07
   10 Center Road, Perry, Ohio 44081 Sheet 1 of 1

2. Plant: Perry Nuclear Power Plant (PNPP) Unit 1
   10 Center Road, Perry, Ohio 44081 200063003
   (Repair Org. P.O. No., etc.)

3. Work Performed By: FIRSTENERGY Nuclear Operating Company PNPP Type Code Symbol Stamp NR
   10 Center Road, Perry, Ohio 44081 Authorization No. 33
   Expiration Date 9-28-08

4. Identification of System: 1B21 Nuclear Boiler System

5. (a) Applicable Construction Code: ASME Section III - Class 1 NF, 1974 Edition
   NAME/SECTION/DIVISION/CLASS

   Winter 19 75 Addenda Code Case(s) 1644-5, 1728, N-32-4, N-241, N-242, N-272, N-282, N-413

   (b) Construction Code used for repairs, modifications, or replacements: 1974 (Edition) W/75 (Addenda) N/A (Code Case(s))

   (c) ASME Code Section XI applicable for Inservice Inspection: 1989 (Edition) N/A (Addenda) N/A (Code Case(s))

   (d) Applicable Edition of Section XI Utilized for Repairs, Modification, or Replacements:

   19 89, N/A 19 N/A Addenda N/A (Code Case(s))

   (e) Design Responsibilities FENOC

6. Identification of Components Repaired, Modified, or Replacement Components

Name of Component	Name of Manufacturer	Manufacturer Serial No.	Nat. Board No.	Other ID.	Year Built	Repair, Replacement, or Modification	ASME Code Stamped
Piping System	Pullman Power	1B21	109	1B21 H0450	1985	Replacement	YES

7. Description of Work: Replace snubber SN 61403/24 (existing) w/new snubber SN 03615883/020

8. Test Conducted: Hydrostatic- ☐ Pneumatic- ☐ Nominal Operating Pressure- ☐ Other- ☐

   Pressure NA psi Test Temperature NA degrees F Code Case(s) NA

NIS-2/NR-1 OWNER'S REPORT FOR REPAIRS OR REPLACEMENTS (Back)

PNPP No. 9308 Rev. 9/11/00 NQI-1741

9. Remarks: NONE

NO NAMEPLATE/STAMPING PERFORMED DUE TO THE INTERFACE CONTROLS OF RA-2370 BEING IN EFFECT AND JURISDICTIONAL AUTHORITY CONCURRENCE HAVING BEEN RECEIVED.

Note: Attach all applicable Manufacturer's Data Reports. Supplemental sheets such as lists, sketches, or drawings may be used, provided (1) size is 8 1/2 in. x 11 in., (2) information in items 1 through 6 of this report is included on each sheet, and (3) each sheet is numbered and the number of sheets is recorded on the front of this form.

CERTIFICATE OF COMPLIANCE

I, Russ Matthys, certify that to the best of my knowledge and belief the statements made in this report are correct and the repair, modification or replacement of the items described above conforms to Section XI of the ASME Code and to the National Board Inspection Code "NR" rules.

National Board Certificate of Authorization No. 33 to use the "NR stamp expires 28 SEPT, 2008

Date 5-5-2007 Signed FENOC-PNPP (name of repair organization) Russ Matthys (authorized representative) QC Supervisor (title)

CERTIFICATE OF INSPECTION/INSERVICE INSPECTION

I, THOMAS G. LAPS, holding a valid commission issued by The National Board of Boiler and Pressure Vessel Inspectors and certificate of competency issued by the jurisdiction of OHIO and employed by HARTFORD STEAM BOILER CT. of HARTFORD, CT have inspected the repair, modification or replacement described in this report on MAY 10, 2007 and state that to the best of my knowledge and belief, this repair, modification or replacement has been completed in accordance with Section XI of the ASME Code and the National Board Inspection Code "NR" rules.

By signing this certificate, neither the undersigned nor my employer makes any warranty, expressed or implied, concerning the work described in this report. Furthermore, neither the undersigned nor my employer shall be liable in any manner for any personal injury, property damage or loss of any kind arising from or connected with this inspection.

Date 5/10, 2007 Signed Thomas G Laps (inspector) Commissions NB4330 N I A OHIO COMM (National Board (include endorsements), and jurisdiction, and no.)

1B21-372

NIS-2/NR-1 OWNER'S REPORT FOR REPAIRS OR REPLACEMENTS

As required by the Provisions of the ASME Code Section XI

PNPP No. 9308 Rev. 9/11/00 NQI-1741

1. Owner: FIRSTENERGY CORP. Date 5-5-07
   10 Center Road, Perry, Ohio 44081 Sheet 1 of 1

2. Plant: Perry Nuclear Power Plant (PNPP) Unit 1
   10 Center Road, Perry, Ohio 44081 200174739
   (Repair Org. P.O. No., etc.)

3. Work Performed By: FIRSTENERGY Nuclear Operating Company PNPP Type Code Symbol Stamp NR
   10 Center Road, Perry, Ohio 44081 Authorization No. 33
   Expiration Date 9-28-08

4. Identification of System: 1B21 Nuclear Boiler System

5. (a) Applicable Construction Code: ASME Section III - Class 1 NF (NAME/SECTION/DIVISION/CLASS), 1974 Edition

   Winter 19 75 Addenda Code Case(s) 1644-5, 1728, N-32-4, N-241, N-242, N-272, N-282, N-413

   (b) Construction Code used for repairs, modifications, or replacements: 1974 (Edition) W/75 (Addenda) N/A (Code Case(s))

   (c) ASME Code Section XI applicable for Inservice Inspection: 1989 (Edition) N/A (Addenda) N/A (Code Case(s))

   (d) Applicable Edition of Section XI Utilized for Repairs, Modification, or Replacements:

   19 89, N/A 19 N/A Addenda N/A (Code Case(s))

   (e) Design Responsibilities FENOC

6. Identification of Components Repaired, Modified, or Replacement Components

Name of Component	Name of Manufacturer	Manufacturer Serial No.	Nat. Board No.	Other ID.	Year Built	Repair, Replacement, or Modification	ASME Code Stamped
Piping System	Pullman Power	1B21	109	1B21 H0471	1985	Replacement	YES

7. Description of Work: Replace snubber SN 614323/1 (existing) w/new snubber SN 30400009/17

8. Test Conducted: Hydrostatic- ☐ Pneumatic- ☐ Nominal Operating Pressure- ☐ Other- ☐

   Pressure NA psi Test Temperature NA degrees F Code Case(s) NA

NIS-2/NR-1 OWNER'S REPORT FOR REPAIRS OR REPLACEMENTS (Back)

PNPP No. 9308 Rev. 9/11/00 NQI-1741

9. Remarks: NONE

NO NAMEPLATE/STAMPING PERFORMED DUE TO THE INTERFACE CONTROLS OF RA-2370 BEING IN EFFECT AND JURISDICTIONAL AUTHORITY CONCURRENCE HAVING BEEN RECEIVED.

Note: Attach all applicable Manufacturer's Data Reports. Supplemental sheets such as lists, sketches, or drawings may be used, provided (1) size is 8 1/2 in. x 11 in., (2) information in items 1 through 6 of this report is included on each sheet, and (3) each sheet is numbered and the number of sheets is recorded on the front of this form.

CERTIFICATE OF COMPLIANCE

I, Russ Matthys, certify that to the best of my knowledge and belief the statements made in this report are correct and the repair, modification or replacement of the items described above conforms to Section XI of the ASME Code and to the National Board Inspection Code "NR" rules.

National Board Certificate of Authorization No. 33 to use the "NR stamp expires 28 SEPT , 2008

Date 5-5-2007 Signed FENOC-PNPP (name of repair organization) Russ Matthys (authorized representative) QC Supervisor (title)

CERTIFICATE OF INSPECTION/INSERVICE INSPECTION

I, THOMAS G. LAPS, holding a valid commission issued by The National Board of Boiler and Pressure Vessel Inspectors and certificate of competency issued by the jurisdiction of OHIO and employed by HARTFORD STEAM BOILER CT. of HARTFORD, CT have inspected the repair, modification or replacement described in this report on MAY 11, 20 07 and state that to the best of my knowledge and belief, this repair, modification or replacement has been completed in accordance with Section XI of the ASME Code and the National Board Inspection Code "NR" rules.

By signing this certificate, neither the undersigned nor my employer makes any warranty, expressed or implied, concerning the work described in this report. Furthermore, neither the undersigned nor my employer shall be liable in any manner for any personal injury, property damage or loss of any kind arising from or connected with this inspection.

Date 5/11, 20 07 Signed Thomas G. Laps (inspector) Commissions NB9330 "N" "I" "A" OHIO COMM (National Board (include endorsements), and jurisdiction, and no.)

1B21-373

NIS-2/NR-1 OWNER'S REPORT FOR REPAIRS OR REPLACEMENTS

As required by the Provisions of the ASME Code Section XI

PNPP No. 9308 Rev. 9/11/00 NQI-1741

1. Owner: FIRSTENERGY CORP. Date 5/9/07
   10 Center Road, Perry, Ohio 44081 Sheet 1 of 2

2. Plant: Perry Nuclear Power Plant (PNPP) Unit 1
   10 Center Road, Perry, Ohio 44081 200073616 & 200081977 (Repair Org. P.O. No., etc.)

3. Work Performed By: FIRSTENERGY Nuclear Operating Company PNPP Type Code Symbol Stamp NR
   10 Center Road, Perry, Ohio 44081 Authorization No. 33
   Expiration Date 9/28/08

4. Identification of System: 1B21 Nuclear Boiler

5. (a) Applicable Construction Code: ASME SECTION III CLASS 1 (NAME/SECTION/DIVISION/CLASS), 1974 Edition
   WINTER 19 75 Addenda Code Case(s) 1728, 1644-4, 272

   (b) Construction Code used for repairs, modifications, or replacements: 1974 (Edition) W75 (Addenda) ____ (Code Case(s))

   (c) ASME Code Section XI applicable for Inservice Inspection: 1989 (Edition) NONE (Addenda) N/A (Code Case(s))

   (d) Applicable Edition of Section XI Utilized for Repairs, Modification, or Replacements:
   19 89, ____ 19 N/A Addenda N/A (Code Case(s))

   (e) Design Responsibilities First Energy Corp

6. Identification of Components Repaired, Modified, or Replacement Components

Name of Component	Name of Manufacturer	Manufacturer Serial No.	Nat. Board No.	Other ID.	Year Built	Repair, Replacement, or Modification	ASME Code Stamped
PIPING SYSTEM	GENERAL ELECTRIC	1B21	64084	1B21F41D	1985	REPLACEMENT	YES

7. Description of Work: Removed valve S/N 160886 and installed valve S/N 160851. Used 12 new inlet studs 1-5/8" HT # K745 and 12 new 1-5/8" hydra nuts HT# 623A. Continued in remarks.

8. Test Conducted: Hydrostatic- ☐ Pneumatic- ☐ Nominal Operating Pressure- ☒ Other- ☐
   Pressure 1032 psi Test Temperature 142 degrees F Code Case(s) N/A

NIS-2/NR-1 OWNER'S REPORT FOR REPAIRS OR REPLACEMENTS (Back)

PNPP No. 9308 Rev. 9/11/00 NQI-1741

9. Remarks: Used 16 new 1" hydra nuts HT# 591A. Used 16 new 1" studs HT# OG81

NO NAMEPLATE/STAMPING PERFORMED DUE TO THE INTERFACE CONTROLS OF RA-2370 BEING IN EFFECT AND JURISDICTIONAL AUTHORITY CONCURRENCE HAVING BEEN RECEIVED.

Note: Attach all applicable Manufacturer's Data Reports. Supplemental sheets such as lists, sketches, or drawings may be used, provided (1) size is 8 1/2 in. x 11 in., (2) information in items 1 through 6 of this report is included on each sheet, and (3) each sheet is numbered and the number of sheets is recorded on the front of this form.

CERTIFICATE OF COMPLIANCE

I, Michael J Tepsick, certify that to the best of my knowledge and belief the statements made in this report are correct and the repair, modification or replacement of the items described above conforms to Section XI of the ASME Code and to the National Board Inspection Code "NR" rules.

National Board Certificate of Authorization No. 33 to use the "NR stamp expires 28 Sept., 20 08

Date 11 May, 20 07 Signed FENOC-PNPP (name of repair organization) [signature] (authorized representative) QC Tech. (title)

CERTIFICATE OF INSPECTION/INSERVICE INSPECTION

I, THOMAS G. LAPS, holding a valid commission issued by The National Board of Boiler and Pressure Vessel Inspectors and certificate of competency issued by the jurisdiction of OHIO and employed by HSB CT. of Hartford, Conn. have inspected the repair, modification or replacement described in this report on MAY 15, 20 07 and state that to the best of my knowledge and belief, this repair, modification or replacement has been completed in accordance with Section XI of the ASME Code and the National Board Inspection Code "NR" rules.

By signing this certificate, neither the undersigned nor my employer makes any warranty, expressed or implied, concerning the work described in this report. Furthermore, neither the undersigned nor my employer shall be liable in any manner for any personal injury, property damage or loss of any kind arising from or connected with this inspection.

Date MAY 15, 20 07 Signed [signature] (inspector) Commissions NB9330 " " " " N I A " OHIO COMM (National Board (include endorsements), and jurisdiction, and no.)

FORM NV-1 MANUFACTURERS' DATA REPORT FOR SAFETY AND SAFETY RELIEF VALVES*
(As Required by the Provisions of the ASME Code, Section III, Div. I)

1/209

1 Manufactured by G. Dikkers & Co. N.V. Hengelo (O) The Netherlands (Name and Address of Manufacturer) 1B2P-373 SH/5/95 24

2 Manufactured for General Electric San Jose Calif. (Name and Address of Purchaser or Owner)

3 Location of Installation North Perry, Ohio Perry 1 (Name and Address)

4. ---------- (CRN) G471-6/125.04.04 (Drawing No.) 23 (Nat'l. Brd. No.) 1978 (Year Built)

5. Valve G471 (Model No., Series No.) Identifying Nos. 160851 (Manufacturers' Serial No.)

Type safety/relief (Safety, Safety Relief, Pilot, Power Actuated)

Orifice Size 4.84" (inch) Nominal Inlet Size 8" (inch) Outlet Size 10" (inch)

6 Set Pressure (PSIG) 1165 Rated Temperature 585 °F

Stamped Capacity 905732 (Sat. Steam) lbs/hr @ 1.3 % Overpressure Blowdown (PSIG) 39.7

Hydrostatic Test (PSIG) Inlet 2350 Outlet 975 (Applicable to valves for closed systems only)

7. Pressure Retaining Pieces

	Serial No. or Identification	Material Specification Incl. Type or Grade
Body	03.05.8 s/n 2	SA 352 LCB
Bonnet or Yoke	11.12.8 s/n 2	SA 352 LCB
Support Rods	----------	-
Nozzle	AEU 049	SA 350 LF2
Disc	59.04.8 s/n 38	SA 351 CF3A
Spring Washers	263095 s/n 43	45 Cr. Mo V 67
Adjusting Screw	AFU 112 + 066	SA 182 F316
Spindle	AEW 033	A 564=74 type 630 cond H1100
Spring	----------	-
Bolting	AUP, AJR, AKA, AJJ, ALR,	SA 193=B7/SA 194=7/SA 194=2H
Other Pieces	AUY, AMR, AJM	-
Liner	68.07.8 s/n 1	SA 351 CF3A
Cover	55.46.7 s/n 3	SA 351 CF8M
Vent pipe	AFW 015	SA 105
Flanges	AFV 019 + 124	SA 105

Max. outside diam. valve body: 475 mm (18.70 inch)
Max. outside length valve : 1643 mm (64.69 inch)

* Supplemental sheets in form of lists, sketches or drawings may be used provided (1) size is 8-1/2" × 11", (2) information in items 1-2 on this data report is included on each sheet, and (3) each sheet is numbered and number of sheets is recorded at top of this form.

(1/76) This form (E00042) may be obtained from the Order Dept., ASME, 345 E. 47 St., New York, N.Y. 10017

2/ 209

FORM NV-1 (Back)

CERTIFICATE OF COMPLIANCE

We certify that the statements made in this report are correct and that this valve conforms to the rules of construction of the ASME Code for Nuclear Power Plant Components, Section III, Div. 1., 1974 Edition, Addenda Sum. '76 (Date), Code Case No. .....

Date 10-11-78 Signed G. Dikkers & Co. N.V. (Manufacturer) by W.M. Willems

Our ASME Certificate of Authorization No. 1806 to use the NV (NV) symbol expires 1st July, 1980 (Date)

CERTIFICATION OF DESIGN

Design information on file at General Electric and Perry

Stress analysis report (Class 1 only) on file at General Electric and Perry

Design specifications certified by[1] Boyd P. Brooks

PE State California Reg. No. 13655

Stress report certified by[1] Robert L. Weiss

PE State California/Illinois Reg. No. M14921/62-25749

[1] Signature not required—list name only.

CERTIFICATE OF SHOP INSPECTION

I, the undersigned, holding a valid commission issued by the National Board of Boiler and Pressure Vessel Inspectors and the State or Province of Ohio and employed by Kemper Ins. of Long Grove Ill. have inspected the pump, or valve, described in this Data Report on 10-11 19 78, and state that to the best of my knowledge and belief, the Manufacturer has constructed this pump, or valve, in accordance with the ASME Code for Nuclear Power Plant Components.

By signing this certificate, neither the Inspector nor his employer makes any warrant, expressed or implied, concerning the equipment described in this Data Report. Furthermore, neither the Inspector nor his employer shall be liable in any manner for any personal injury or property damage or a loss of any kind arising from or connected with this inspection.

Date 10-11 19 78

Signed Lee Graham (Inspector) Commissions NB 4456 (Nat'l Bd., State Prov. and No.)

1B21-374

NIS-2/NR-1 OWNER'S REPORT FOR REPAIRS OR REPLACEMENTS

As required by the Provisions of the ASME Code Section XI

PNPP No. 9308 Rev. 9/11/00 NQI-1741

1. Owner: FIRSTENERGY CORP. Date 5/14/07
   10 Center Road, Perry, Ohio 44081 Sheet 1 of 2

2. Plant: Perry Nuclear Power Plant (PNPP) Unit 1
   10 Center Road, Perry, Ohio 44081 200073622 & 200081984 (Repair Org. P.O. No., etc.)

3. Work Performed By: FIRSTENERGY Nuclear Operating Company PNPP Type Code Symbol Stamp NR
   10 Center Road, Perry, Ohio 44081 Authorization No. 33
   Expiration Date 9/28/08

4. Identification of System: 1B21 Nuclear Boiler

5. (a) Applicable Construction Code: ASME SECTION III CLASS 1 (NAME/SECTION/DIVISION/CLASS), 1974 Edition
   WINTER 19 75 Addenda Code Case(s) 1728, 1644-4, 272

   (b) Construction Code used for repairs, modifications, or replacements: 1974 (Edition) W75 (Addenda) ____ (Code Case(s))

   (c) ASME Code Section XI applicable for Inservice Inspection: 1989 (Edition) NONE (Addenda) N/A (Code Case(s))

   (d) Applicable Edition of Section XI Utilized for Repairs, Modification, or Replacements:
   19 89 , ____ 19 N/A Addenda N/A (Code Case(s))

   (e) Design Responsibilities First Energy Corp

6. Identification of Components Repaired, Modified, or Replacement Components

Name of Component	Name of Manufacturer	Manufacturer Serial No.	Nat. Board No.	Other ID.	Year Built	Repair, Replacement, or Modification	ASME Code Stamped
PIPING SYSTEM	GENERAL ELECTRIC	1B21	64084	1B21F47H	1985	REPLACEMENT	YES

7. Description of Work: Removed valve S/N 160870 and installed valve S/N 160894. Used 12 new inlet studs 1-5/8" HT # OG84 and 12 new 1-5/8" hydra nuts HT# 590A. Continued in remarks.

8. Test Conducted: Hydrostatic- ☐ Pneumatic- ☐ Nominal Operating Pressure- ☒ Other- ☐
   Pressure 1032 psi Test Temperature 142 degrees F Code Case(s) N/A

NIS-2/NR-1 OWNER'S REPORT FOR REPAIRS OR REPLACEMENTS (Back)

PNPP No. 9308 Rev. 9/11/00 NQI-1741

9. Remarks: Used 16 new 1" hydra nuts HT# 591A. Used 16 new 1" studs HT# OG81

NO NAMEPLATE/STAMPING PERFORMED DUE TO THE INTERFACE CONTROLS OF RA-2370

BEING IN EFFECT AND JURISDICTIONAL AUTHORITY CONCURRENCE HAVING BEEN RECEIVED.

Note: Attach all applicable Manufacturer's Data Reports. Supplemental sheets such as lists, sketches, or drawings may be used, provided (1) size is 8 1/2 in. x 11 in., (2) information in items 1 through 6 of this report is included on each sheet, and (3) each sheet is numbered and the number of sheets is recorded on the front of this form.

CERTIFICATE OF COMPLIANCE

I, Michael J Tepsick, certify that to the best of my knowledge and belief the statements made in this report are correct and the repair, modification or replacement of the items described above conforms to Section XI of the ASME Code and to the National Board Inspection Code "NR" rules.

National Board Certificate of Authorization No. 33 to use the "NR stamp expires 28 Sept., 20 08

Date 14 May, 20 07 Signed FENOC-PNPP (name of repair organization) [signature] (authorized representative) QC Tech. (title)

CERTIFICATE OF INSPECTION/INSERVICE INSPECTION

I, Thomas G Laps, holding a valid commission issued by The National Board of Boiler and Pressure Vessel Inspectors and certificate of competency issued by the jurisdiction of OHIO and employed by HSB CT. of Hartford, Conn. have inspected the repair, modification or replacement described in this report on MAY 15 20 07 and state that to the best of my knowledge and belief, this repair, modification or replacement has been completed in accordance with Section XI of the ASME Code and the National Board Inspection Code "NR" rules.

By signing this certificate, neither the undersigned nor my employer makes any warranty, expressed or implied, concerning the work described in this report. Furthermore, neither the undersigned nor my employer shall be liable in any manner for any personal injury, property damage or loss of any kind arising from or connected with this inspection.

Date 5/15, 20 07 Signed Thomas G Laps (inspector) Commissions NB 9330 "N" "I" "A" Ohio Comm. (National Board (include endorsements), and jurisdiction, and no.)

As Required by the Provisions of the ASME Code, Section III, Div. I

1821 - 374 PAGE 2 OF 2

1. Manufactured by G. Dikkers & Co. NV. Hengelo (O) The Netherlands
(Name and Address of N Certificate Holder)
2. Manufactured for General Electric, San Jose, California
(Name and Address of Purchaser or Owner)
3. Location of Installation Perry I + II spares North Perry Ohio
(Name and Address)
4. N/A (CRN) G 471-6/125.04.03 rev. 6 (Drawing No.) 152 (Nat'l. Brd. No.) 1979 (Year Built)
5. Valve G471 (Model No., Series No.) Identifying Nos. 160894 (N Certificate Holder's Serial No.)
Type Safety/Relief
Safety, Safety Relief, Pilot, Power Actuated
Orifice Size 4,84" inch Nominal Inlet Size 8" (Flange) inch Outlet Size 10" inch
6. Set Pressure (PSIG) 1180 Rated Temperature 585 °F
Stamped Capacity 917253 lbs/hr (Sat. Steam) @ 3 % Overpressure Blowdown (PSIG) 42.50
Hydrostatic Test (PSIG) Inlet 2350 Outlet 975
(Applicable to valves for closed systems only)
7. Pressure Retaining Pieces

	Serial No. or Identification	Material Specification Incl. Type or Grade
Body	08.05.8 s/n 3	SA 352 LCB
Bonnet or Yoke	13.38.8 s/n 5	SA 352 LCB
Support Rods		
Nozzle	AJW 093	SA 350 LF2
Disc	60.07.9 s/n 1B	SA 351 CF3A
Spring Washers	26.30.95 s/n 158	45 Cr Mo V 67
Adjusting Screw	AME 096 ASB 020	SA 182 F 316
Spindle	CAD 011	A 564-74 type 630 cond. H1100
Spring		
Bolting	ANY/ANZ/CAM/AJS/APA/APB/ANZ	SA 193-B7/SA 194-7/SA 194-2H
Other Pieces	CAL/ALR/AWZ	
Liner	51.36.8 s/n 2	SA 351 CF3A
Cover	63.38.8 s/n 2	SA 351 CF8M
Vent. Pipe	AWB 005	SA 105
Flanges	ASA 160 ASA 221	SA 105

Max. outside diam. valve body 480 mm (18.90)

Max. outside length valve 1647 mm (64.84)

* Supplemental sheets in form of lists, sketches or drawings may be used provided (1) size is 8-1/2" × 11", (2) information in items 1-2 on this Data Report is included on each sheet, and (3) each sheet is numbered and number of sheets is recorded at top of this form.

(10/77) This form (E00042) may be obtained from the Order Dept., ASME, 345 E. 47th St., New York, N.Y. 10017

CERTIFICATE OF COMPLIANCE

We certify that the statements made in this report are correct and that this valve conforms to the rules of construction of the ASME Code for Nuclear Power Plant Components, Section III, Div. 1, 1974 Edition, Addenda Sum. '76 (Date), Code Case No. N.A.

81-07-01 Signed G. Dikkers & Co NV (N Certificate Holder) by [signature]

Our ASME Certificate of Authorization No. 1806 to use the NV (NV) symbol expires 1st. July 1980 (Date)

CERTIFICATION OF DESIGN

Design information on file at General Electric and Perry I + II spares

Stress analysis report (Class 1 only) on file at General Electric and Perry I + II spares

Design specifications certified by[1] Boyd P. Brooks

PE State California Reg. No. 13655

Stress report certified by[1] Robert L. Weiss

State California/Illinois Reg. No. M 14921/62-25749

[1] Signature not required—list name only.

CERTIFICATE OF SHOP INSPECTION

I, the undersigned, holding a valid commission issued by the National Board of Boiler and Pressure Vessel Inspectors and the State or Province of Ontario (Canada) and employed by Royal Indemnity Co. of New York have inspected the pump, or valve, described in this Data Report on 10 October, 19 79 and state that to the best of my knowledge and belief, the N Certificate Holder has constructed this pump, or valve, in accordance with the ASME Code for Nuclear Power Plant Components.

By signing this certificate, neither the Inspector nor his employer makes any warrant, expressed or implied, concerning the equipment described in this Data Report. Furthermore, neither the Inspector nor his employer shall be liable in any manner for any personal injury or property damage or a loss of any kind arising from or connected with this inspection.

Date 7 July 19 81

Signed [signature] (Inspector) Commissions N.B. 6653 (Nat'l. Bd., State Prov. and No.)

1B21 - 375

NIS-2/NR-1 OWNER'S REPORT FOR REPAIRS OR REPLACEMENTS

As required by the Provisions of the ASME Code Section XI

PNPP No. 9308 Rev. 9/11/00 NQI-1741

1. Owner: FIRSTENERGY CORP. Date 5/15/07
10 Center Road, Perry, Ohio 44081 Sheet 1 of 2

2. Plant: Perry Nuclear Power Plant (PNPP) Unit 1
10 Center Road, Perry, Ohio 44081 200073621 & 200081983
(Repair Org. P.O. No., etc.)

3. Work Performed By: FIRSTENERGY Nuclear Operating Company PNPP Type Code Symbol Stamp NR
10 Center Road, Perry, Ohio 44081 Authorization No. 33
Expiration Date 9/28/08

4. Identification of System: 1B21 Nuclear Boiler

5. (a) Applicable Construction Code: ASME SECTION III CLASS 1 ,1974 Edition
NAME/SECTION/DIVISION/CLASS

WINTER 19 75 Addenda Code Case(s) 1728, 1644-4, 272

(b) Construction Code used for repairs, modifications, or replacements: 1974 (Edition) W75 (Addenda) (Code Case(s))

(c) ASME Code Section XI applicable for Inservice Inspection: 1989 (Edition) NONE (Addenda) N/A (Code Case(s))

(d) Applicable Edition of Section XI Utilized for Repairs, Modification, or Replacements:

19 89 , 19 N/A Addenda N/A (Code Case(s))

(e) Design Responsibilities First Energy Corp

6. Identification of Components Repaired, Modified, or Replacement Components

Name of Component	Name of Manufacturer	Manufacturer Serial No.	Nat. Board No.	Other ID.	Year Built	Repair, Replacement, or Modification	ASME Code Stamped
PIPING SYSTEM	GENERAL ELECTRIC	1B21	64084	1B21F47F	1985	REPLACEMENT	YES

7. Description of Work: Removed valve S/N 160873 and installed valve S/N 160875. Used 12 new inlet studs 1-5/8" (8) HT # K745 (4) HT# OG84 and 12 new 1-5/8" hydra nuts HT# 590A. Continued in remarks.

8. Test Conducted: Hydrostatic- ☐ Pneumatic- ☐ Nominal Operating Pressure- ☒ Other- ☐

Pressure 1032 psi Test Temperature 142 degrees F Code Case(s) N/A

NIS-2/NR-1 OWNER'S REPORT FOR REPAIRS OR REPLACEMENTS (Back)

PNPP No. 9308 Rev. 9/11/00 NQI-1741

9. Remarks: Used 16 new 1" hydra nuts HT# 591A and 2 new 5/8" nuts HT# 407C.

Used 16 new 1" studs HT# OG81

NO NAMEPLATE/STAMPING PERFORMED DUE TO THE INTERFACE CONTROLS OF RA-2370

BEING IN EFFECT AND JURISDICTIONAL AUTHORITY CONCURRENCE HAVING BEEN RECEIVED.

Note: Attach all applicable Manufacturer's Data Reports. Supplemental sheets such as lists, sketches, or drawings may be used, provided (1) size is 8 1/2 in. x 11 in., (2) information in items 1 through 6 of this report is included on each sheet, and (3) each sheet is numbered and the number of sheets is recorded on the front of this form.

CERTIFICATE OF COMPLIANCE

I, Michael J Tepsick, certify that to the best of my knowledge and belief the statements made in this report are correct and the repair, modification or replacement of the items described above conforms to Section XI of the ASME Code and to the National Board Inspection Code "NR" rules.

National Board Certificate of Authorization No. 33 to use the "NR stamp expires 28 Sept., 20 08

Date 14 May, 20 07 Signed FENOC-PNPP (name of repair organization) [signature] (authorized representative) QC Tech. (title)

CERTIFICATE OF INSPECTION/INSERVICE INSPECTION

I, Thomas G Laps, holding a valid commission issued by The National Board of Boiler and Pressure Vessel Inspectors and certificate of competency issued by the jurisdiction of OHIO and employed by HSB CT. of Hartford, Conn. have inspected the repair, modification or replacement described in this report on MAY/15, 20 07 and state that to the best of my knowledge and belief, this repair, modification or replacement has been completed in accordance with Section XI of the ASME Code and the National Board Inspection Code "NR" rules.

By signing this certificate, neither the undersigned nor my employer makes any warranty, expressed or implied, concerning the work described in this report. Furthermore, neither the undersigned nor my employer shall be liable in any manner for any personal injury, property damage or loss of any kind arising from or connected with this inspection.

Date 5/15, 20 07 Signed [signature] (inspector) Commissions NB 9330 "N" "I" "A" Ohio Comm. (National Board (include endorsements), and jurisdiction, and no.)

As Required by the Provisions of the ASME Code, Section III, Div. I 1B21-375 SHEET 2

1. Manufactured by G. Dikkers & Co. NV. Hengelo (O) The Netherlands
(Name and Address of N Certificate Holder)
2. Manufactured for General Electric, San Jose, California
(Name and Address of Purchaser or Owner)
3. Location of Installation Perry 11 North Perry Ohio
(Name and Address)
4. (CRN) G 471-6/125.04.03 rev. 6 (Drawing No.) 80 (Nat'l. Brd. No.) 1979 (Year Built)
5. Valve G471 (Model No., Series No.) Identifying Nos. 160875 (N Certificate Holder's Serial No.)
Type Safety/Relief
Safety, Safety Relief, Pilot, Power Actuated
Orifice Size 4,84" inch Nominal Inlet Size 8" inch Outlet Size 10" inch
6. Set Pressure (PSIG) 1180 Rated Temperature 585 °F
Stamped Capacity 917253 lbs/hr Sat. Steam @ 3 % Overpressure Blowdown (PSIG) 36,5
Hydrostatic Test (PSIG) Inlet 2350 Outlet 975
(Applicable to valves for closed systems only)
7. Pressure Retaining Pieces

	Serial No. or Identification	Material Specification Incl. Type or Grade
Body	07.22.8 sn 2	SA 352 LCB
Bonnet or Yoke	04.07.8 sn 3	SA 352 LCB
Support Rods		
Nozzle	AJW 037	SA 350 LF2
Disc	54.30.8 sn 1B	SA 351 CF3A
Spring Washers	26.30.95 sn 77	45 Cr Mo V 67
Adjusting Screw	AME 028 AMF 010	SA 182 F 316
Spindle	AJE 039	A 564-74 type 630 cond. H1100
Spring		
* Bolting	ANY/AJJ/AYE/AVS/AJK	SA 193-B7/SA 194-7/SA 194-2H
~~Other Pieces~~	AWZ/AJS/APA/AJL	
Liner	56.17.8-2	SA 351 CF3A
Cover	52.23.8-5	SA 351 CF8M
Vent. Pipe	AKE 008	SA 105
Flanges	AFV 128 AKF 030	SA 105

Max. outside diam. valve body 478 mm (18,82)"

Max. outside length valve 1641 mm (64,60)"

* Supplemental sheets in form of lists, sketches or drawings may be used provided (1) size is 8-1/2" × 11", (2) information in items 1-2 on this Data Report is included on each sheet, and (3) each sheet is numbered and number of sheets is recorded at top of this form.

(10/77) This form (E00042) may be obtained from the Order Dept., ASME, 345 E. 47th St., New York, N.Y. 10017

CERTIFICATE OF COMPLIANCE

We certify that the statements made in this report are correct and that this valve conforms to the rules of construction of the ASME Code for Nuclear Power Plant Components, Section III, Div. 1., 1974 Edition, Addenda sum. '76 (Date), Code Case No. N.A.

Date 81-06-25 Signed G. Dikkers & Co NV (N Certificate Holder) by [signature]

Our ASME Certificate of Authorization No. 1806 to use the NV (NV) symbol expires 1st. July 1980 (Date)

CERTIFICATION OF DESIGN

Design information on file at General Electric and Perry II

Stress analysis report (Class 1 only) on file at General Electric and Perry II

Design specifications certified by[1] Boyd P. Brooks

PE State California Reg. No. 13655

Stress report certified by[1] Robert L. Weiss

PE State California/Illinois Reg. No. M 14921/62-25749

[1] Signature not required—list name only.

CERTIFICATE OF SHOP INSPECTION

I, the undersigned, holding a valid commission issued by the National Board of Boiler and Pressure Vessel Inspectors and the State or Province of Ohio, PA and employed by Kemper Ins. of Long Grove Ill have inspected the pump, or valve, described in this Data Report on 23 March, 19 79 and state that to the best of my knowledge and belief, the N Certificate Holder has constructed this pump, or valve, in accordance with the ASME Code for Nuclear Power Plant Components.

By signing this certificate, neither the Inspector nor his employer makes any warrant, expressed or implied, concerning the equipment described in this Data Report. Furthermore, neither the Inspector nor his employer shall be liable in any manner for any personal injury or property damage or a loss of any kind arising from or connected with this inspection.

Date 6-26 1981

Signed [signature] (Inspector) Commissions NB 4305 (Nat'l. Bd., State Prov. and No.)

1B21-376

NIS-2/NR-1 OWNER'S REPORT FOR REPAIRS OR REPLACEMENTS

As required by the Provisions of the ASME Code Section XI

PNPP No. 9308 Rev. 9/11/00 NQI-1741

1. Owner: FIRSTENERGY CORP
10 Center Road, Perry, Ohio 44081
Date 5/14/07
Sheet 1 of 2

2. Plant: Perry Nuclear Power Plant (PNPP)
10 Center Road, Perry, Ohio 44081
Unit 1
200073619 & 200081981
(Repair Org. P.O. No., etc.)

3. Work Performed By: FIRSTENERGY Nuclear Operating Company PNPP
10 Center Road, Perry, Ohio 44081
Type Code Symbol Stamp NR
Authorization No. 33
Expiration Date 9/28/08

4. Identification of System: 1B21 Nuclear Boiler

5. (a) Applicable Construction Code: ASME SECTION III CLASS 1 (NAME/SECTION/DIVISION/CLASS), 1974 Edition

WINTER 19 75 Addenda Code Case(s) 1728, 1644-4, 272

(b) Construction Code used for repairs, modifications, or replacements: 1974 (Edition) W75 (Addenda) ____ (Code Case(s))

(c) ASME Code Section XI applicable for Inservice Inspection: 1989 (Edition) NONE (Addenda) N/A (Code Case(s))

(d) Applicable Edition of Section XI Utilized for Repairs, Modification, or Replacements:

19 89 , ____ 19 N/A Addenda N/A (Code Case(s))

(e) Design Responsibilities First Energy Corp

6. Identification of Components Repaired, Modified, or Replacement Components

Name of Component	Name of Manufacturer	Manufacturer Serial No.	Nat. Board No.	Other ID.	Year Built	Repair, Replacement, or Modification	ASME Code Stamped
PIPING SYSTEM	GENERAL ELECTRIC	1B21	64084	1B21F47B	1985	REPLACEMENT	YES

7. Description of Work: Removed valve S/N 160891 and installed valve S/N 160855. Used 12 new inlet studs 1-5/8" HT # K745 and 12 new 1-5/8" hydra nuts HT# 623A. Continued in remarks.

8. Test Conducted: Hydrostatic- ☐ Pneumatic- ☐ Nominal Operating Pressure- ☒ Other- ☐

Pressure 1032 psi Test Temperature 142 degrees F Code Case(s) N/A

NIS-2/NR-1 OWNER'S REPORT FOR REPAIRS OR REPLACEMENTS (Back)

PNPP No. 9308 Rev. 9/11/00 NOI-1741

9. Remarks: Used 16 new 1" hydra nuts HT# 591A. Used 16 new 1" studs HT# OG81

NO NAMEPLATE/STAMPING PERFORMED DUE TO THE INTERFACE CONTROLS OF RA-2370

BEING IN EFFECT AND JURISDICTIONAL AUTHORITY CONCURRENCE HAVING BEEN RECEIVED.

Note: Attach all applicable Manufacturer's Data Reports. Supplemental sheets such as lists, sketches, or drawings may be used, provided (1) size is 8 1/2 in. x 11 in., (2) information in items 1 through 6 of this report is included on each sheet, and (3) each sheet is numbered and the number of sheets is recorded on the front of this form.

CERTIFICATE OF COMPLIANCE

I, Michael J Tepsick, certify that to the best of my knowledge and belief the statements made in this report are correct and the repair, modification or replacement of the items described above conforms to Section XI of the ASME Code and to the National Board Inspection Code "NR" rules.

National Board Certificate of Authorization No. 33 to use the "NR stamp expires 28 Sept., 20 08

Date 14 May, 20 07 Signed FENOC-PNPP (name of repair organization) [signature] (authorized representative) QC Tech. (title)

CERTIFICATE OF INSPECTION/INSERVICE INSPECTION

I, Thomas G Laps, holding a valid commission issued by The National Board of Boiler and Pressure Vessel Inspectors and certificate of competency issued by the jurisdiction of OHIO and employed by HSB CT. of Hartford, Conn. have inspected the repair, modification or replacement described in this report on MAY 15, 20 07 and state that to the best of my knowledge and belief, this repair, modification or replacement has been completed in accordance with Section XI of the ASME Code and the National Board Inspection Code "NR" rules.

By signing this certificate, neither the undersigned nor my employer makes any warranty, expressed or implied, concerning the work described in this report. Furthermore, neither the undersigned nor my employer shall be liable in any manner for any personal injury, property damage or loss of any kind arising from or connected with this inspection.

Date 5/15, 20 07 Signed Thomas G Laps (inspector) Commissions NB 9330 "N" "I" "A" Ohio Comm. (National Board (include endorsements), and jurisdiction, and no.)

As required by the Provisions of the ASME Code, Section III, Div. 1

1B21-376
PAGE 2 OF

1. Manufactured by G. Dikkers & Co. NV. Hengelo (O) The Netherlands
(Name and Address of N Certificate Holder)

2. Manufactured for General Electric, San Jose, California
(Name and Address of Purchaser or Owner)

3. Location of Installation Perry I North Perry Ohio
(Name and Address)

4. G 471-6/125.04.03 rev. 6 31 1978
(CRN) (Drawing No.) (Nat'l Brd No.) (Year Built)

5. Valve G471 Identifying Nos 160855
(Model No., Series No.) (N Certificate Holder's Serial No.)

Type Safety/Relief
Safety, Safety Relief, Pilot, Power Actuated

Orifice Size 4.84" inch Nominal Inlet Size 8" inch Outlet Size 10" inch

6. Set Pressure (PSIG) 1180 Rated Temperature 585 °F

Stamped Capacity 917253 lbs/hr @ 3 % Overpressure Blowdown (PSIG) 110.4
Sat. Steam

Hydrostatic Test (PSIG) Inlet 2350 Outlet 975
(Applicable to valves for closed systems only)

7. Pressure Retaining Pieces

	Serial No. or Identification	Material Specification Incl. Type or Grade
Body	10.44.7 nr 6	SA 352 LCB
Bonnet or Yoke	04.14.8 R 2	SA 352 LCB
Support Rods		
Nozzle	AEU 057	SA 350 LF2
Disc	53.03.8 /4A	SA 351 CF3A
Spring Washers	211653 11	45 Cr Mo V 67
Adjusting Screw	AFU 102 AFU 091	SA 182 F 316
Spindle	AEW 014	A 564-74 type 630 cond. H1100
Spring		
Bolting	AJR, AJJ, AUP, AKA, ALR, AUY, AMR, AJM, AJL.	SA 193-B7/SA 194-7/SA 194-2H
Other Pieces		
Liner	61.15.8 sn1	SA 351 CF3A
Cover	55.50.7 sn7	SA 351 CF8M
Vent. Pipe	AFW 039	SA 105
Flanges	AFV 033 AFV 064	SA 105

Max. outside diam. valve body 478mm(18.74")

Max. outside length valve 1643mm(64.68")

* Supplemental sheets in form of lists, sketches or drawings may be used provided (1) size is 8-1/2" × 11", (2) information in items 1-2 on this Data Report is included on each sheet, and (3) each sheet is numbered and number of sheets is recorded at top of this form.

(10/77) This form (E00042) may be obtained from the Order Dept., ASME, 345 E. 47th St., New York, N.Y. 10017

FORM NV-1 (Back)

CERTIFICATE OF COMPLIANCE

We certify that the statements made in this report are correct and that this valve conforms to the rules of construction of the ASME Code for Nuclear Power Plant Components, Section III, Div. 1, 1974 Edition, Addendasum, '76 (Date)

Code Case No .....

Date 10-11-78 Signed G. Dikkers & Co. N.V. (Manufacturer) by W.M. Willems

Our ASME Certificate of Authorization No. 1806 to use the NV (NV) symbol expires 1st July, 1980 (Date)

CERTIFICATION OF DESIGN

Design information on file at General Electric and Perry

Stress analysis report (Class 1 only) on file at General Electric and Perry

Design specifications certified by[1] Boyd P. Brooks

PE State California Reg. No. 13655

Stress report certified by[1] Robert L. Weiss

PE State California/Illinois Reg. No M14921/62-25749

[1] Signature not required—list name only

CERTIFICATE OF SHOP INSPECTION

I, the undersigned, holding a valid commission issued by the National Board of Boiler and Pressure Vessel Inspectors and the State or Province of Ohio and employed by Kemper Ins. of Long Grove Ill have inspected the pump, or valve, described in this Data Report on 10-11, 1978, and state that to the best of my knowledge and belief, the Manufacturer has constructed this pump, or valve, in accordance with the ASME Code for Nuclear Power Plant Components.

By signing this certificate, neither the Inspector nor his employer makes any warrant, expressed or implied, concerning the equipment described in this Data Report. Furthermore, neither the Inspector nor his employer shall be liable in any manner for any personal injury or property damage or a loss of any kind arising from or connected with this inspection.

Date 10-11 1978

Signed (Inspector) Commissions NB 4456 (Nat'l Bd., State Prov. and No.)

1B21-377

NIS-2/NR-1 OWNER'S REPORT FOR REPAIRS OR REPLACEMENTS

As required by the Provisions of the ASME Code Section XI

PNPP No. 9308 Rev. 9/11/00 NQI-1741

1. Owner: FIRSTENERGY CORP. Date 5/14/07
   10 Center Road, Perry, Ohio 44081 Sheet 1 of 2

2. Plant: Perry Nuclear Power Plant (PNPP) Unit 1
   10 Center Road, Perry, Ohio 44081 200073620 & 200081982 (Repair Org. P.O. No., etc.)

3. Work Performed By: FIRSTENERGY Nuclear Operating Company PNPP Type Code Symbol Stamp NR
   10 Center Road, Perry, Ohio 44081 Authorization No. 33
   Expiration Date 9/28/08

4. Identification of System: 1B21 Nuclear Boiler

5. (a) Applicable Construction Code: ASME SECTION III CLASS 1 (NAME/SECTION/DIVISION/CLASS), 1974 Edition

   WINTER 19 75 Addenda Code Case(s) 1728, 1644-4, 272

   (b) Construction Code used for repairs, modifications, or replacements: 1974 (Edition) W75 (Addenda) (Code Case(s))

   (c) ASME Code Section XI applicable for Inservice Inspection: 1989 (Edition) NONE (Addenda) N/A (Code Case(s))

   (d) Applicable Edition of Section XI Utilized for Repairs, Modification, or Replacements:

   19 89, 19 N/A Addenda N/A (Code Case(s))

   (e) Design Responsibilities First Energy Corp

6. Identification of Components Repaired, Modified, or Replacement Components

Name of Component	Name of Manufacturer	Manufacturer Serial No.	Nat. Board No.	Other ID.	Year Built	Repair, Replacement, or Modification	ASME Code Stamped
PIPING SYSTEM	GENERAL ELECTRIC	1B21	64084	1B21F47D	1985	REPLACEMENT	YES

7. Description of Work: Removed valve S/N 160890 and installed valve S/N 160856. Used 12 new inlet studs 1-5/8" HT # K745 and 12 new 1-5/8" hydra nuts (6)HT# 590A and (6)HT#623A. Continued in remarks.

8. Test Conducted: Hydrostatic- ☐ Pneumatic- ☐ Nominal Operating Pressure- ☒ Other- ☐

   Pressure 1032 psi Test Temperature 142 degrees F Code Case(s) N/A

NIS-2/NR-1 OWNER'S REPORT FOR REPAIRS OR REPLACEMENTS (Back)

PNPP No. 9308 Rev. 9/11/00 NOI-1741

9. Remarks: Used 16 new 1" hydra nuts HT# 591A. Used 16 new 1" studs HT# OG81

NO NAMEPLATE/STAMPING PERFORMED DUE TO THE INTERFACE CONTROLS OF RA-2370

BEING IN EFFECT AND JURISDICTIONAL AUTHORITY CONCURRENCE HAVING BEEN RECEIVED.

Note: Attach all applicable Manufacturer's Data Reports. Supplemental sheets such as lists, sketches, or drawings may be used, provided (1) size is 8 1/2 in. x 11 in., (2) information in items 1 through 6 of this report is included on each sheet, and (3) each sheet is numbered and the number of sheets is recorded on the front of this form.

CERTIFICATE OF COMPLIANCE

I, Michael J Tepsick, certify that to the best of my knowledge and belief the statements made in this report are correct and the repair, modification or replacement of the items described above conforms to Section XI of the ASME Code and to the National Board Inspection Code "NR" rules.

National Board Certificate of Authorization No. 33 to use the "NR stamp expires 28 Sept., 20 08

Date 15 May, 20 07 Signed FENOC-PNPP (name of repair organization) [signature] (authorized representative) QC Tech. (title)

CERTIFICATE OF INSPECTION/INSERVICE INSPECTION

I, Thomas G Laps, holding a valid commission issued by The National Board of Boiler and Pressure Vessel Inspectors and certificate of competency issued by the jurisdiction of OHIO and employed by HSB CT. of Hartford, Conn. have inspected the repair, modification or replacement described in this report on MAY 15, 20 07 and state that to the best of my knowledge and belief, this repair, modification or replacement has been completed in accordance with Section XI of the ASME Code and the National Board Inspection Code "NR" rules.

By signing this certificate, neither the undersigned nor my employer makes any warranty, expressed or implied, concerning the work described in this report. Furthermore, neither the undersigned nor my employer shall be liable in any manner for any personal injury, property damage or loss of any kind arising from or connected with this inspection.

Date 5/15, 20 07 Signed Thomas G Laps (inspector) Commissions NB 9330 "N" "I" "A" Ohio Comm. (National Board (include endorsements), and jurisdiction, and no.)

As Required by the Provisions of the ASME Code, Section III, Div. I 1B21-377 SHEET 2 of

1. Manufactured by G. Dikkers & Co. NV. Hengelo (O) The Netherlands
   (Name and Address of N Certificate Holder)
2. Manufactured for General Electric, San Jose, California
   (Name and Address of Purchaser or Owner)
3. Location of Installation Perry I North Perry Ohio
   (Name and Address)
4. (CRN) G 471-6/125.04.03 rev. 6 (Drawing No.) 30 (Nat'l. Brd. No.) 1978 (Year Built)
5. Valve G471 (Model No., Series No.) Identifying Nos. 160856 (N Certificate Holder's Serial No.)
   Type Safety/Relief
   Safety, Safety Relief, Pilot, Power Actuated
   Orifice Size 4,84" inch Nominal Inlet Size 8" inch Outlet Size 10" inch
6. Set Pressure (PSIG) 1180 Rated Temperature 585 °F
   Stamped Capacity 917253 lbs/hr Sat. Steam @ 3 % Overpressure Blowdown (PSIG) 36,7
   Hydrostatic Test (PSIG) Inlet 2350 Outlet 975
   (Applicable to valves for closed systems only)
7. Pressure Retaining Pieces

	Serial No. or Identification	Material Specification Incl. Type or Grade
Body	10.04.8 sn 1	SA 352 LCB
Bonnet or Yoke	03.06.8 R2	SA 352 LCB
Support Rods		
Nozzle	AEU 063	SA 350 LF2
Disc	53.04.8 3A	SA 351 CF3A
* Spring Washers	26.30.59-50	45 Cr Mo V 67
Adjusting Screw	AFU 038 AFU 074	SA 182 F 316
Spindle	AEW 015	A 564-74 type 630 cond. H1100
Spring		
Bolting	AUP/AJR/AKA/AJJ/ALR/ AUY/AMR/AJM/AJL	SA 193-B7/SA 194-7/SA 194-2H
Other Pieces		
Liner	53.16.8 sn 1	SA 351 CF3A
Cover	55.46.7 sn 2	SA 351 CF8M
Vent. Pipe	AFW 033	SA 105
Flanges	AFV 044 AFV 001	SA 105

Max. outside diam. valve body 479 mm (18.86)"

Max. outside length valve 1647 mm (64.84)"

* Supplemental sheets in form of lists, sketches or drawings may be used provided (1) size is 8-1/2" × 11", (2) information in items 1-2 on this Data Report is included on each sheet, and (3) each sheet is numbered and number of sheets is recorded at top of this form.

(10/77) This form (E00042) may be obtained from the Order Dept., ASME, 345 E. 47th St., New York, N.Y. 10017

CERTIFICATE OF COMPLIANCE

We certify that the statements made in this report are correct and that this valve conforms to the rules of construction of the ASME Code for Nuclear Power Plant Components, Section III, Div. 1., 1974 Edition, Addenda Sum. '76 (Date), Code Case No. N.A.

Date 81-06-25 Signed G. Dikkers & Co NV (N Certificate Holder) by [signature]

Our ASME Certificate of Authorization No. 1806 to use the NV (NV) symbol expires 1st. July 1980 (Date).

CERTIFICATION OF DESIGN

Design information on file at General Electric and Perry II

Stress analysis report (Class 1 only) on file at General Electric and Perry II

Design specifications certified by[1] Boyd P. Brooks

PE State California Reg. No. 13655

Stress report certified by[1] Robert L. Weiss

PE State California/Illinois Reg. No. M 14921/62-25749

[1] Signature not required—list name only.

CERTIFICATE OF SHOP INSPECTION

I, the undersigned, holding a valid commission issued by the National Board of Boiler and Pressure Vessel Inspectors and the State or Province of Ohio, PA and employed by Kemper Ins. of Long Grove Ill have inspected the pump, or valve, described in this Data Report on 17-11, 19 78 and state that to the best of my knowledge and belief, the N Certificate Holder has constructed this pump, or valve, in accordance with the ASME Code for Nuclear Power Plant Components

By signing this certificate, neither the Inspector nor his employer makes any warrant, expressed or implied, concerning the equipment described in this Data Report. Furthermore, neither the Inspector nor his employer shall be liable in any manner for any personal injury or property damage or a loss of any kind arising from or connected with this inspection.

Date 6-26 19 81

Signed J. W. Stokes (Inspector) Commissions NB 4805 (Nat'l. Bd., State Prov. and No.)

1B21-378

NIS-2/NR-1 OWNER'S REPORT FOR REPAIRS OR REPLACEMENTS

As required by the Provisions of the ASME Code Section XI

PNPP No. 9308 Rev. 9/11/00 NQI-1741

1. Owner: FIRSTENERGY CORP. Date 5/12/07
   10 Center Road, Perry, Ohio 44081 Sheet 1 of 2

2. Plant: Perry Nuclear Power Plant (PNPP) Unit 1
   10 Center Road, Perry, Ohio 44081 200073623 & 200081985 (Repair Org. P.O. No., etc.)

3. Work Performed By: FIRSTENERGY Nuclear Operating Company PNPP Type Code Symbol Stamp NR
   10 Center Road, Perry, Ohio 44081 Authorization No. 33
   Expiration Date 9/28/08

4. Identification of System: 1B21 Nuclear Boiler

5. (a) Applicable Construction Code: ASME SECTION III CLASS 1 (NAME/SECTION/DIVISION/CLASS), 1974 Edition
   WINTER 19 75 Addenda Code Case(s) 1728, 1644-4, 272

   (b) Construction Code used for repairs, modifications, or replacements: 1974 (Edition) W75 (Addenda) ____ (Code Case(s))

   (c) ASME Code Section XI applicable for Inservice Inspection: 1989 (Edition) NONE (Addenda) N/A (Code Case(s))

   (d) Applicable Edition of Section XI Utilized for Repairs, Modification, or Replacements:
   19 89, ____ 19 N/A Addenda N/A (Code Case(s))

   (e) Design Responsibilities First Energy Corp

6. Identification of Components Repaired, Modified, or Replacement Components

Name of Component	Name of Manufacturer	Manufacturer Serial No.	Nat. Board No.	Other ID.	Year Built	Repair, Replacement, or Modification	ASME Code Stamped
PIPING SYSTEM	GENERAL ELECTRIC	1B21	64084	1B21F51B	1985	REPLACEMENT	YES

7. Description of Work: Removed valve S/N 160860 and installed valve S/N 160862. Used 12 new inlet studs 1-5/8" HT # OG84 and 12 new 1-5/8" hydra nuts HT# 590A. Continued in remarks.

8. Test Conducted: Hydrostatic- ☐ Pneumatic- ☐ Nominal Operating Pressure- ☒ Other- ☐
   Pressure 1032 psi Test Temperature 142 degrees F Code Case(s) N/A

NIS-2/NR-1 OWNER'S REPORT FOR REPAIRS OR REPLACEMENTS (Back)

PNPP No. 9308 Rev. 9/11/00 NQI-1741

9. Remarks: Used 16 new 1" hydra nuts HT# 591A. Used 16 new 1" studs HT# OG81

NO NAMEPLATE/STAMPING PERFORMED DUE TO THE INTERFACE CONTROLS OF RA-2370

BEING IN EFFECT AND JURISDICTIONAL AUTHORITY CONCURRENCE HAVING BEEN RECEIVED.

Note: Attach all applicable Manufacturer's Data Reports. Supplemental sheets such as lists, sketches, or drawings may be used, provided (1) size is 8 1/2 in. x 11 in., (2) information in items 1 through 6 of this report is included on each sheet, and (3) each sheet is numbered and the number of sheets is recorded on the front of this form.

CERTIFICATE OF COMPLIANCE

I, Michael J Tepsick, certify that to the best of my knowledge and belief the statements made in this report are correct and the repair, modification or replacement of the items described above conforms to Section XI of the ASME Code and to the National Board Inspection Code "NR" rules.

National Board Certificate of Authorization No. 33 to use the "NR stamp expires 28 Sept., 20 08

Date 12 May, 20 07 Signed FENOC-PNPP (name of repair organization) [signature] (authorized representative) QC Tech. (title)

CERTIFICATE OF INSPECTION/INSERVICE INSPECTION

I, Thomas G Laps, holding a valid commission issued by The National Board of Boiler and Pressure Vessel Inspectors and certificate of competency issued by the jurisdiction of OHIO and employed by HSB CT. of Hartford, Conn. have inspected the repair, modification or replacement described in this report on MAY 15, 20 07 and state that to the best of my knowledge and belief, this repair, modification or replacement has been completed in accordance with Section XI of the ASME Code and the National Board Inspection Code "NR" rules.

By signing this certificate, neither the undersigned nor my employer makes any warranty, expressed or implied, concerning the work described in this report. Furthermore, neither the undersigned nor my employer shall be liable in any manner for any personal injury, property damage or loss of any kind arising from or connected with this inspection.

Date 5/15, 20 07 Signed Thomas G Laps (inspector) Commissions NB 9330 "N" "I" "A" Ohio Comm. (National Board (include endorsements), and jurisdiction, and no.)

As Required by the Provisions of the ASME Code, Section III, Div. I

1B21-378

PAGE 2 OF

1. Manufactured by G. Dikkers & Co. NV. Hengelo (O) The Netherlands
(Name and Address of N Certificate Holder)

2. Manufactured for General Electric, San Jose, California
(Name and Address of Purchaser or Owner)

3. Location of Installation ~~Perry-I-North Perry-Ohio~~
(Name and Address)

4. G 471-6/125.04.03 rev. 6 — 39 — 1978
(CRN) (Drawing No.) (Nat'l Brd. No.) (Year Built)

5. Valve G471 (Model No., Series No.) Identifying Nos. 160862 (N Certificate Holder's Serial No.)

Type Safety/Relief
Safety, Safety Relief, Pilot, Power Actuated

Orifice Size 4,84" inch Nominal Inlet Size 8" inch Outlet Size 10" inch

6. Set Pressure (PSIG) 1190 Rated Temperature 585 °F

Stamped Capacity 934933 lbs/hr Sat. Steam @ 3 % Overpressure Blowdown (PSIG) 45.2

Hydrostatic Test (PSIG) Inlet 2350 Outlet 975
(Applicable to valves for closed systems only)

7. Pressure Retaining Pieces

	Serial No. or Identification	Material Specification Incl. Type or Grade
Body	13.46.7 s/n 2	SA 352 LCB
Bonnet or Yoke	13.24.8 s/n 3	SA 352 LCB
Support Rods		
Nozzle	AEU 053	SA 350 LF2
Disc	61.03.8 s/n 3B	SA 351 CF3A
Spring Washers	26.30.95 s/n36	45 Cr Mo V 67
Adjusting Screw	AFU 099/AFU 028	SA 182 F 316
Spindle	AEW 010	A 564-74 type 630 cond. H1100
Spring		
Bolting	AVT/AJR/AKA/AJJ/ALR	SA 193-B7/SA 194-7/SA 194-2H
~~Other Pieces~~	AUY/AMB/AJM/AJL	
~~Liner~~		~~SA 351 CF3A~~
~~Cover~~	58.13.8 s/n 2	~~SA 351 CF8M~~
~~Vent. Pipe~~	58.46.7 s/n 1	~~SA 105~~
~~Flanges~~	AKE 002	~~SA 105~~
	AFV 028/AFV 086	

Max. outside diam. valve body : 477 mm (18.77)

Max. outside length valve : (64.56)

* Supplemental sheets in form of lists, sketches or drawings may be used provided (1) size is 8-1/2" × 11", (2) information in items 1-2 on this Data Report is included on each sheet, and (3) each sheet is numbered and number of sheets is recorded at top of this form.

(10/77) This form (E00042) may be obtained from the Order Dept., ASME, 345 E. 47th St., New York, N.Y. 10017.

CERTIFICATE OF COMPLIANCE

We certify that the statements made in this report are correct and that this valve conforms to the rules of construction of the ASME Code for Nuclear Power Plant Components, Section III, Div. 1., 1974 Edition, Addenda sum. 76 (Date), Code Case No. N.A.

Date 81-07-03 Signed G. Dikkers & Co NV (N Certificate Holder) by [signature]

Our ASME Certificate of Authorization No. 1806 to use the NV (NV) symbol expires 1st. July 1980 (Date)

CERTIFICATION OF DESIGN

Design information on file at General Electric and Perry I

Stress analysis report (Class 1 only) on file at General Electric and Perry I

Design specifications certified by[1] Boyd P. Brooks

PE State California Reg. No. 13655

Stress report certified by[1] Robert L. Weiss

PE State California/Illinois Reg. No. M 14921/62-25749

[1] Signature not required—list name only.

CERTIFICATE OF SHOP INSPECTION

I, the undersigned, holding a valid commission issued by the National Board of Boiler and Pressure Vessel Inspectors and the State or Province of Ohio and employed by Kemper Ins. of Long Grove Ill have inspected the pump, or valve, described in this Data Report on 28-11, 19 78 and state that to the best of my knowledge and belief, the N Certificate Holder has constructed this pump, or valve, in accordance with the ASME Code for Nuclear Power Plant Components.

By signing this certificate, neither the Inspector nor his employer makes any warrant, expressed or implied, concerning the equipment described in this Data Report. Furthermore, neither the Inspector nor his employer shall be liable in any manner for any personal injury or property damage or a loss of any kind arising from or connected with this inspection.

Date 7-8 19 81

Signed [signature] (Inspector) Commissions NB-4805 (Nat'l Bd., State Prov. and No.)

1B21-379

NIS-2/NR-1 OWNER'S REPORT FOR REPAIRS OR REPLACEMENTS

As required by the Provisions of the ASME Code Section XI

PNPP No. 9308 Rev. 9/11/00 NQI-1741

1. Owner: FIRSTENERGY CORP. Date 5/14/07
   10 Center Road, Perry, Ohio 44081 Sheet 1 of 2

2. Plant: Perry Nuclear Power Plant (PNPP) Unit 1
   10 Center Road, Perry, Ohio 44081 200073617 &200081980 (Repair Org. P.O. No., etc.)

3. Work Performed By: FIRSTENERGY Nuclear Operating Company PNPP Type Code Symbol Stamp NR
   10 Center Road, Perry, Ohio 44081 Authorization No. 33
   Expiration Date 9/28/08

4. Identification of System: 1B21 Nuclear Boiler

5. (a) Applicable Construction Code: ASME SECTION III CLASS 1 (NAME/SECTION/DIVISION/CLASS), 1974 Edition

   WINTER 19 75 Addenda Code Case(s) 1728, 1644-4, 272

   (b) Construction Code used for repairs, modifications, or replacements: 1974 (Edition) W75 (Addenda) ____ (Code Case(s))

   (c) ASME Code Section XI applicable for Inservice Inspection: 1989 (Edition) NONE (Addenda) N/A (Code Case(s))

   (d) Applicable Edition of Section XI Utilized for Repairs, Modification, or Replacements:

   19 89, ____ 19 N/A Addenda N/A (Code Case(s))

   (e) Design Responsibilities First Energy Corp

6. Identification of Components Repaired, Modified, or Replacement Components

Name of Component	Name of Manufacturer	Manufacturer Serial No.	Nat. Board No.	Other ID.	Year Built	Repair, Replacement, or Modification	ASME Code Stamped
PIPING SYSTEM	GENERAL ELECTRIC	1B21	64084	1B21F41F	1985	REPLACEMENT	YES

7. Description of Work: Removed valve S/N 160869 and installed valve S/N 160871. Used 12 new inlet studs 1-5/8" HT # K745 and 12 new 1-5/8" hydra nuts HT# 623A. Continued in remarks.

8. Test Conducted: Hydrostatic- ☐ Pneumatic- ☐ Nominal Operating Pressure- ☒ Other- ☐

   Pressure 1032 psi Test Temperature 142 degrees F Code Case(s) N/A

NIS-2/NR-1 OWNER'S REPORT FOR REPAIRS OR REPLACEMENTS (Back)

PNPP No. 9308 Rev. 9/11/00 NQI-1741

9. Remarks: Used 16 new 1" hydra nuts HT# 591A. Used 16 new 1" studs HT# OG81

NO NAMEPLATE/STAMPING PERFORMED DUE TO THE INTERFACE CONTROLS OF RA-2370

BEING IN EFFECT AND JURISDICTIONAL AUTHORITY CONCURRENCE HAVING BEEN RECEIVED.

Note: Attach all applicable Manufacturer's Data Reports. Supplemental sheets such as lists, sketches, or drawings may be used, provided (1) size is 8 1/2 in. x 11 in., (2) information in items 1 through 6 of this report is included on each sheet, and (3) each sheet is numbered and the number of sheets is recorded on the front of this form.

CERTIFICATE OF COMPLIANCE

I, Michael J Tepsick, certify that to the best of my knowledge and belief the statements made in this report are correct and the repair, modification or replacement of the items described above conforms to Section XI of the ASME Code and to the National Board Inspection Code "NR" rules.

National Board Certificate of Authorization No. 33 to use the "NR stamp expires 28 Sept., 20 08

Date 14 May, 20 07 Signed FENOC-PNPP (name of repair organization) [signature] (authorized representative) QC Tech. (title)

CERTIFICATE OF INSPECTION/INSERVICE INSPECTION

I, Thomas G Laps, holding a valid commission issued by The National Board of Boiler and Pressure Vessel Inspectors and certificate of competency issued by the jurisdiction of OHIO and employed by HSB CT. of Hartford, Conn. have inspected the repair, modification or replacement described in this report on MAY 15, 20 07 and state that to the best of my knowledge and belief, this repair, modification or replacement has been completed in accordance with Section XI of the ASME Code and the National Board Inspection Code "NR" rules.

By signing this certificate, neither the undersigned nor my employer makes any warranty, expressed or implied, concerning the work described in this report. Furthermore, neither the undersigned nor my employer shall be liable in any manner for any personal injury, property damage or loss of any kind arising from or connected with this inspection.

Date 5/15, 20 07 Signed Thomas G Laps (inspector) Commissions NB 9330 "N" "I" "A" Ohio Comm. (National Board (include endorsements), and jurisdiction, and no.)

As Required by the Provisions of the ASME Code, Section III, Div. I 1B21-379/SHEET 2 OF

1. Manufactured by G. Dikkers & Co. NV. Hengelo (O) The Netherlands
(Name and Address of N Certificate Holder)
2. Manufactured for General Electric, San Jose, California
(Name and Address of Purchaser or Owner)
3. Location of Installation Perry II North Perry Ohio
(Name and Address)
4. (CRN) G 471-6/125.04.03 rev. 6 (Drawing No.) 71 (Nat'l. Brd. No.) 1979 (Year Built)
5. Valve G471 (Model No., Series No.) Identifying Nos. 160871 (N Certificate Holder's Serial No.)
Type Safety/Relief
Safety, Safety Relief; Pilot; Power Actuated
Orifice Size 4,84" inch Nominal Inlet Size 8" inch Outlet Size 10" inch
6. Set Pressure (PSIG) 1165 Rated Temperature 585 °F
Stamped Capacity 905732 Sat. Steam lbs/hr @ 3 % Overpressure Blowdown (PSIG) 40,5
Hydrostatic Test (PSIG) Inlet 2350 Outlet 975
(Applicable to valves for closed systems only)
7. Pressure Retaining Pieces

	Serial No. or Identification	Material Specification Incl. Type or Grade
* Body	16.25.8 sn 1	SA 352 LCB
* Bonnet or Yoke	04.31.8 sn 2	SA 352 LCB
Support Rods		
Nozzle	AJW 023	SA 350 LF2
Disc	57.29.8 B1	SA 351 CF3A
* Spring Washers	26.30.95-73	45 Cr Mo V 67
Adjusting Screw	AFU 062 AFU 001	SA 182 F 316
Spindle	AJE 006	A 564-74 type 630 cond. H1100
Spring		
* Bolting	ANY/AYE/AVS/ALR/AWZ/AMR	SA 193-B7/SA 194-7/SA 194-2H
~~Other Pieces~~	AJM/AJL/AJJ	
Liner	67.17.8 sn 2	SA 351 CF3A
Cover	53.28.8 sn 6	SA 351 CF8M
Vent. Pipe	AKE 050	SA 105
Flanges	AKF 013 AFV 010	SA 105

Max. outside diam. valve body 478 mm (18,82)"

Max. outside length valve 1644 mm (64,72)"

* Supplemental sheets in form of lists, sketches or drawings may be used provided (1) size is 8-1/2" × 11", (2) information in items 1-2 on this Data Report is included on each sheet, and (3) each sheet is numbered and number of sheets is recorded at top of this form.

(10/77) This form (E00042) may be obtained from the Order Dept., ASME, 345 E. 47th St., New York, N.Y. 10017

CERTIFICATE OF COMPLIANCE

We certify that the statements made in this report are correct and that this valve conforms to the rules of construction of the ASME Code for Nuclear Power Plant Components, Section III, Div. 1., 1974 Edition, Addenda sum. '76 (Date)
Code Case No. N.A.

Date 81-06-25 Signed G. Dikkers & Co NV (N Certificate Holder) by [signature]

Our ASME Certificate of Authorization No. 1806 to use the NV (NV) symbol expires 1st. July 1980 (Date)

CERTIFICATION OF DESIGN

Design information on file at General Electric and Perry II
Stress analysis report (Class 1 only) on file at General Electric and Perry II

Design specifications certified by[1] Boyd P. Brooks
PE State California Reg. No. 13655
Stress report certified by[1] Robert L. Weiss
PE State California/Illinois Reg. No. M 14921/62-25749

[1] Signature not required—list name only.

CERTIFICATE OF SHOP INSPECTION

I, the undersigned, holding a valid commission issued by the National Board of Boiler and Pressure Vessel Inspectors and the State or Province of Ohio, PA and employed by Kemper Ins. of Long Grove Ill have inspected the pump, or valve, described in this Data Report on 3-16, 19 79 and state that to the best of my knowledge and belief, the N Certificate Holder has constructed this pump, or valve, in accordance with the ASME Code for Nuclear Power Plant Components.

By signing this certificate, neither the Inspector nor his employer makes any warrant, expressed or implied, concerning the equipment described in this Data Report. Furthermore, neither the Inspector nor his employer shall be liable in any manner for any personal injury or property damage or a loss of any kind arising from or connected with this inspection.

Date 6-26, 19 81
Signed J. W. Stoke (Inspector) Commissions NB 4805 (Nat'l. Bd., State Prov. and No.)

1B21-380

NIS-2/NR-1 OWNER'S REPORT FOR REPAIRS OR REPLACEMENTS

As required by the Provisions of the ASME Code Section XI

PNPP No. 9308 Rev. 9/11/00 NQI-1741

1. Owner: FIRSTENERGY CORP. Date 5/14/07
   10 Center Road, Perry, Ohio 44081 Sheet 1 of 2

2. Plant: Perry Nuclear Power Plant (PNPP) Unit 1
   10 Center Road, Perry, Ohio 44081 200073624 & 200081986 (Repair Org. P.O. No., etc.)

3. Work Performed By: FIRSTENERGY Nuclear Operating Company PNPP Type Code Symbol Stamp NR
   10 Center Road, Perry, Ohio 44081 Authorization No. 33
   Expiration Date 9/28/08

4. Identification of System: 1B21 Nuclear Boiler

5. (a) Applicable Construction Code: ASME SECTION III CLASS 1 (NAME/SECTION/DIVISION/CLASS), 1974 Edition

   WINTER 19 75 Addenda Code Case(s) 1728, 1644-4, 272

   (b) Construction Code used for repairs, modifications, or replacements: 1974 (Edition) W75 (Addenda) ____ (Code Case(s))

   (c) ASME Code Section XI applicable for Inservice Inspection: 1989 (Edition) NONE (Addenda) N/A (Code Case(s))

   (d) Applicable Edition of Section XI Utilized for Repairs, Modification, or Replacements:

   19 89 , ____ 19 N/A Addenda N/A (Code Case(s))

   (e) Design Responsibilities First Energy Corp

6. Identification of Components Repaired, Modified, or Replacement Components

Name of Component	Name of Manufacturer	Manufacturer Serial No.	Nat. Board No.	Other ID.	Year Built	Repair, Replacement, or Modification	ASME Code Stamped
PIPING SYSTEM	GENERAL ELECTRIC	1B21	64084	1B21F51D	1985	REPLACEMENT	YES

7. Description of Work: Removed valve S/N 160857 and installed valve S/N 160896. Used 12 new inlet studs 1-5/8" HT # OG84 and 12 new 1-5/8" hydra nuts HT# 590A. Continued in remarks.

8. Test Conducted: Hydrostatic- ☐ Pneumatic- ☐ Nominal Operating Pressure- ☒ Other- ☐

   Pressure 1032 psi Test Temperature 142 degrees F Code Case(s) N/A

NIS-2/NR-1 OWNER'S REPORT FOR REPAIRS OR REPLACEMENTS (Back)

PNPP No. 9308 Rev. 9/11/00 NQI-1741

9. Remarks: Used 16 new 1" hydra nuts HT# 591A. Used 16 new 1" studs HT# OG81

NO NAMEPLATE/STAMPING PERFORMED DUE TO THE INTERFACE CONTROLS OF RA-2370

BEING IN EFFECT AND JURISDICTIONAL AUTHORITY CONCURRENCE HAVING BEEN RECEIVED.

Note: Attach all applicable Manufacturer's Data Reports. Supplemental sheets such as lists, sketches, or drawings may be used, provided (1) size is 8 1/2 in. x 11 in., (2) information in items 1 through 6 of this report is included on each sheet, and (3) each sheet is numbered and the number of sheets is recorded on the front of this form.

CERTIFICATE OF COMPLIANCE

I, Michael J Tepsick, certify that to the best of my knowledge and belief the statements made in this report are correct and the repair, modification or replacement of the items described above conforms to Section XI of the ASME Code and to the National Board Inspection Code "NR" rules.

National Board Certificate of Authorization No. 33 to use the "NR stamp expires 28 Sept., 20 08

Date 14 May, 20 07 Signed FENOC-PNPP (name of repair organization) [signature] (authorized representative) QC Tech. (title)

CERTIFICATE OF INSPECTION/INSERVICE INSPECTION

I, Thomas G Laps, holding a valid commission issued by The National Board of Boiler and Pressure Vessel Inspectors and certificate of competency issued by the jurisdiction of OHIO and employed by HSB CT. of Hartford, Conn. have inspected the repair, modification or replacement described in this report on MAY 15, 20 07 and state that to the best of my knowledge and belief, this repair, modification or replacement has been completed in accordance with Section XI of the ASME Code and the National Board Inspection Code "NR" rules.

By signing this certificate, neither the undersigned nor my employer makes any warranty, expressed or implied, concerning the work described in this report. Furthermore, neither the undersigned nor my employer shall be liable in any manner for any personal injury, property damage or loss of any kind arising from or connected with this inspection.

Date 5/15, 20 07 Signed [signature] (inspector) Commissions NB 9330 "N" "I" "A" Ohio Comm. (National Board (include endorsements), and jurisdiction, and no.)

As Required by the Provisions of the ASME Code, Section III, Div. I 1B21-380 PAGE 2 OF 2

1. Manufactured by G. Dikkers & Co. NV. Hengelo (O) The Netherlands
(Name and Address of N Certificate Holder)
2. Manufactured for General Electric, San Jose, California
(Name and Address of Purchaser or Owner)
Location of Installation Perry I + II spares North Perry Ohio
(Name and Address)
4. N/A (CRN) G 471-6/125.04.03 rev. 6 (Drawing No.) 154 (Nat'l. Brd. No.) 1979 (Year Built)
5. Valve G471 (Model No., Series No.) Identifying Nos. 160896 (N Certificate Holder's Serial No.)
Type Safety/Relief
Safety, Safety Relief, Pilot, Power Actuated
Orifice Size 4.84" inch Nominal Inlet Size 8" (Flange) inch Outlet Size 10" inch
6. Set Pressure (PSIG) 1190 Rated Temperature 585 °F
Stamped Capacity 924933 lbs/hr (Sat. Steam) @ 3 % Overpressure Blowdown (PSIG) 111,66
Hydrostatic Test (PSIG) Inlet 2350 Outlet 975 (Applicable to valves for closed systems only)
7. Pressure Retaining Pieces

	Serial No. or Identification	Material Specification Incl. Type or Grade
Body	03.24.8 s/n 1	SA 352 LCB
Bonnet or Yoke	08.47.8 s/n 1	SA 352 LCB
Support Rods		
Nozzle	AJW 129	SA 350 LF2
Disc	51.09.9 s/n 2B	SA 351 CF3A
Spring Washers	26.30.95 s/n 156	45 Cr Mo V 67
Adjusting Screw	CBA 057 CBA 008	SA 182 F 316
Spindle	CAD 001	A 564-74 type 630 cond. H1100
Spring		
Bolting	ANY/ANZ/CAM/AJS/APA/APB/ANZ CAL/ALR/AWZ	SA 193-B7/SA 194-7/SA 194-2H
~~Other Pieces~~		
Liner	51.38.8 s/n 1	SA 351 CF3A
Cover	52.37.8 s/n 2	SA 351 CF8M
Vent. Pipe	AWB 044	SA 105
Flanges	ASA 076 ASA 226	SA 105

Max. outside diam. valve body 479 mm (18.86)

Max. outside length valve 1647 mm (64.84)

* Supplemental sheets in form of lists, sketches or drawings may be used provided (1) size is 8-1/2" × 11", (2) information in items 1-2 on this Data Report is included on each sheet, and (3) each sheet is numbered and number of sheets is recorded at top of this form.

(10/77) This form (E00042) may be obtained from the Order Dept., ASME, 345 E. 47th St., New York, N.Y. 10017

CERTIFICATE OF COMPLIANCE

We certify that the statements made in this report are correct and that this valve conforms to the rules of construction of the ASME Code for Nuclear Power Plant Components, Section III, Div. 1, 1974 Edition, Addenda Sum. '76 (Date)

Code Case No. N.A.

Date 81-07-01 Signed G. Dikkers & Co NV (N Certificate Holder) by J. Pirobber

Our ASME Certificate of Authorization No. 1806 to use the NV (NV) symbol expires 1st. July 1980 (Date)

CERTIFICATION OF DESIGN

Design information on file at General Electric and Perry I + II spares

Stress analysis report (Class 1 only) on file at General Electric and Perry I + II spares

Design specifications certified by[1] Boyd P. Brooks

PE State California Reg. No. 13655

Stress report certified by[1] Robert L. Weiss

State California/Illinois Reg. No. M 14921/62-25749

[1] Signature not required—list name only.

CERTIFICATE OF SHOP INSPECTION

I, the undersigned, holding a valid commission issued by the National Board of Boiler and Pressure Vessel Inspectors and the State or Province of Ontario (Canada) and employed by Royal Indemnity Co. of New York have inspected the pump, or valve, described in this Data Report on 10 October, 19 79 and state that to the best of my knowledge and belief, the N Certificate Holder has constructed this pump, or valve, in accordance with the ASME Code for Nuclear Power Plant Components.

By signing this certificate, neither the Inspector nor his employer makes any warrant, expressed or implied, concerning the equipment described in this Data Report. Furthermore, neither the Inspector nor his employer shall be liable in any manner for any personal injury or property damage or a loss of any kind arising from or connected with this inspection.

Date 7th July 19 81

Signed (Inspector) Commissions N.B. 6653. (Nat'l. Bd., State Prov. and No.)

1B21-381

NIS-2/NR-1 OWNER'S REPORT FOR REPAIRS OR REPLACEMENTS

As required by the Provisions of the ASME Code Section XI

PNPP No. 9308 Rev. 9/11/00 NQI-1741

1. Owner: FIRSTENERGY CORP. Date 5/14/07
   10 Center Road, Perry, Ohio 44081 Sheet 1 of 2

2. Plant: Perry Nuclear Power Plant (PNPP) Unit 1
   10 Center Road, Perry, Ohio 44081 200073615 & 200081975 (Repair Org. P.O. No., etc.)

3. Work Performed By: FIRSTENERGY Nuclear Operating Company PNPP Type Code Symbol Stamp NR
   10 Center Road, Perry, Ohio 44081 Authorization No. 33
   Expiration Date 9/28/08

4. Identification of System: 1B21 Nuclear Boiler

5. (a) Applicable Construction Code: ASME SECTION III CLASS 1 (NAME/SECTION/DIVISION/CLASS), 1974 Edition

   WINTER 19 75 Addenda Code Case(s) 1728, 1644-4, 272

   (b) Construction Code used for repairs, modifications, or replacements: 1974 (Edition) W75 (Addenda) ____ (Code Case(s))

   (c) ASME Code Section XI applicable for Inservice Inspection: 1989 (Edition) NONE (Addenda) N/A (Code Case(s))

   (d) Applicable Edition of Section XI Utilized for Repairs, Modification, or Replacements:

   19 89 , ____ 19 N/A Addenda N/A (Code Case(s))

   (e) Design Responsibilities First Energy Corp

6. Identification of Components Repaired, Modified, or Replacement Components

Name of Component	Name of Manufacturer	Manufacturer Serial No.	Nat. Board No.	Other ID.	Year Built	Repair, Replacement, or Modification	ASME Code Stamped
PIPING SYSTEM	GENERAL ELECTRIC	1B21	64084	1B21F41B	1985	REPLACEMENT	YES

7. Description of Work: Removed valve S/N 160848 and installed valve S/N 160849. Used 12 new inlet studs 1-5/8" HT # K745 and 12 new 1-5/8" hydra nuts HT# 623A. Continued in remarks.

8. Test Conducted: Hydrostatic- ☐ Pneumatic- ☐ Nominal Operating Pressure- ☒ Other- ☐

   Pressure 1032 psi Test Temperature 142 degrees F Code Case(s) N/A

NIS-2/NR-1 OWNER'S REPORT FOR REPAIRS OR REPLACEMENTS (Back)

PNPP No. 9308 Rev. 9/11/00 NQI-1741

9. Remarks: Used 16 new 1" hydra nuts HT# 591A. Used 16 new 1" studs HT# OG81

NO NAMEPLATE/STAMPING PERFORMED DUE TO THE INTERFACE CONTROLS OF RA-2370

BEING IN EFFECT AND JURISDICTIONAL AUTHORITY CONCURRENCE HAVING BEEN RECEIVED.

Note: Attach all applicable Manufacturer's Data Reports. Supplemental sheets such as lists, sketches, or drawings may be used, provided (1) size is 8 1/2 in. x 11 in., (2) information in items 1 through 6 of this report is included on each sheet, and (3) each sheet is numbered and the number of sheets is recorded on the front of this form.

CERTIFICATE OF COMPLIANCE

I, Michael J Tepsick, certify that to the best of my knowledge and belief the statements made in this report are correct and the repair, modification or replacement of the items described above conforms to Section XI of the ASME Code and to the National Board Inspection Code "NR" rules.

National Board Certificate of Authorization No. 33 to use the "NR stamp expires 28 Sept., 20 08

Date 14 May, 20 07 Signed FENOC-PNPP (name of repair organization) [signature] (authorized representative) QC Tech. (title)

CERTIFICATE OF INSPECTION/INSERVICE INSPECTION

I, THOMAS G. LAPS, holding a valid commission issued by The National Board of Boiler and Pressure Vessel Inspectors and certificate of competency issued by the jurisdiction of OHIO and employed by HSB CT. of Hartford, Conn. have inspected the repair, modification or replacement described in this report on MAY 15 20 07 and state that to the best of my knowledge and belief, this repair, modification or replacement has been completed in accordance with Section XI of the ASME Code and the National Board Inspection Code "NR" rules.

By signing this certificate, neither the undersigned nor my employer makes any warranty, expressed or implied, concerning the work described in this report. Furthermore, neither the undersigned nor my employer shall be liable in any manner for any personal injury, property damage or loss of any kind arising from or connected with this inspection.

Date 5/15, 20 07 Signed Thomas G. Laps (inspector) Commissions NB9330 "NIA" OHIO COMM (National Board (include endorsements), and jurisdiction, and no.)

FORM NV-1 MANUFACTURERS' DATA REPORT FOR SAFETY AND SAFETY RELIEF VALVES*
(As Required by the Provisions of the ASME Code, Section III, Div. I)

213
1B21A-381 PAGE 2 OF

1. Manufactured by G. Dikkers & Co. N.V. Hengelo (O) The Netherlands
(Name and Address of Manufacturer)

2. Manufactured for General Electric San Jose CAlif.
(Name and Address of Purchaser or Owner)

3. Location of Installation North Perry, Ohio Perry1
(Name and Address)

4. ---------- (CRN) G471-6/125.04.04 (Drawing No.) 24 (Nat'l. Brd. No.) 1978 (Year Built)

5. Valve G471 (Model No., Series No.) Identifying Nos. 160849 (Manufacturers' Serial No.)

Type safety/relief
Safety, Safety Relief, Pilot, Power Actuated

Orifice Size 4.84" inch Nominal Inlet Size 8" inch Outlet Size 10" inch

6. Set Pressure (PSIG) 1165 Rated Temperature 585 °F

Stamped Capacity 905732 lbs/hr @ 103 % Overpressure Blowdown (PSIG) 96.2
Set Steam

Hydrostatic Test (PSIG) Inlet 2350 Outlet 975
(Applicable to valves for closed systems only)

7. Pressure Retaining Pieces

	Serial No. or Identification	Material Specification Incl. Type or Grade
Body	13.46.7 s/n 5	SA 352 LCB
Bonnet or Yoke	02.26.8 s/n 1	SA 352 LCB
Support Rods	----------	-
Nozzle	AEU 031	SA 350 LF2
Disc	53.03.8 s/n 28	SA 351 CF3A
Spring Washers	211653 s/n 18	45 Cr Mo V 67
Adjusting Screw	AEU 043/AEU 063	SA 182 F316
Spindle	AEW 001	A 564-74 type 630 cond. H1100
Spring	----------	-
Bolting	AUP, AJR, AKA, AJJ, ALR,	SA 193-B7/SA 194-7/SA 194-2H
Other Pieces	AUY, AMR, AJM	
Liner	64.04.8 s/n 2	SA 351 CF3A
Cover	58.46.7 s/n 7	SA 351 CF8M
Vent pipe	AFW 030	SA 105
Flanges	AFV 022/AFV 091	SA 105

Max. outside diam. valve body: 476 mm (18.74 inch)
Max. outside length valve : 1645 mm (64.76 inch)

* Supplemental sheets in form of lists, sketches or drawings may be used provided (1) size is 8-1/2" × 11", (2) information in items 1-2 on this data report is included on each sheet, and (3) each sheet is numbered and number of sheets is recorded at top of this form.

(1/76) This form (E00042) may be obtained from the Order Dept., ASME, 345 E. 47 St., New York, N.Y. 10017

2/21

FORM NV-1 (Back)

CERTIFICATE OF COMPLIANCE

We certify that the statements made in this report are correct and that this valve conforms to the rules of construction of the ASME Code for Nuclear Power Plant Components, Section III, Div 1, 1974 Edition, Addenda Suml. '76 (Date)
Code Case No. .....

Date 10-11-78 Signed G. Dikkers & Co. N.V. (Manufacturer) by W.M. Willems

Our ASME Certificate of Authorization No. 1806 to use the NV (NV) symbol expires 1st July, 1980 (Date)

CERTIFICATION OF DESIGN

Design information on file at General Electric and Perry
Stress analysis report (Class 1 only) on file at General Electric and Perry

Design specifications certified by[1] Boyd P. Brooks
PE State California Reg. No. 13655
Stress report certified by[1] Robert L. Weiss
PE State California/Illinois Reg. No. M14921/62-25749

[1] Signature not required—list name only.

CERTIFICATE OF SHOP INSPECTION

I, the undersigned, holding a valid commission issued by the National Board of Boiler and Pressure Vessel Inspectors and the State or Province of Ohio and employed by Kemper Insp. of Long Grove, Ill. have inspected the pump, or valve, described in this Data Report on 10-11, 1978, and state that to the best of my knowledge and belief, the Manufacturer has constructed this pump, or valve, in accordance with the ASME Code for Nuclear Power Plant Components.

By signing this certificate, neither the Inspector nor his employer makes any warrant, expressed or implied, concerning the equipment described in this Data Report. Furthermore, neither the Inspector nor his employer shall be liable in any manner for any personal injury or property damage or a loss of any kind arising from or connected with this inspection.

Date 10-11, 19.78

Signed Lee Crotsen (Inspector) Commissions NB 4456 (Nat'l. Bd., State Prov. and No.)

1B21-382

NIS-2/NR-1 OWNER'S REPORT FOR REPAIRS OR REPLACEMENTS

As required by the Provisions of the ASME Code Section XI

PNPP No. 9308 Rev. 9/11/00 NQI-1741

1. Owner: FIRSTENERGY CORP. Date 5/14/07
   10 Center Road, Perry, Ohio 44081 Sheet 1 of 2

2. Plant: Perry Nuclear Power Plant (PNPP) Unit 1
   10 Center Road, Perry, Ohio 44081 200174507 & 200247881 (Repair Org. P.O. No., etc.)

3. Work Performed By: FIRSTENERGY Nuclear Operating Company PNPP Type Code Symbol Stamp NR
   10 Center Road, Perry, Ohio 44081 Authorization No. 33
   Expiration Date 9/28/08

4. Identification of System: 1B21 Nuclear Boiler

5. (a) Applicable Construction Code: ASME SECTION III CLASS 1 (NAME/SECTION/DIVISION/CLASS), 1974 Edition

   WINTER 19 75 Addenda Code Case(s) 1728, 1644-4, 272

   (b) Construction Code used for repairs, modifications, or replacements: 1974 (Edition) W75 (Addenda) ____ (Code Case(s))

   (c) ASME Code Section XI applicable for Inservice Inspection: 1989 (Edition) NONE (Addenda) N/A (Code Case(s))

   (d) Applicable Edition of Section XI Utilized for Repairs, Modification, or Replacements:

   19 89, ____ 19 N/A Addenda N/A (Code Case(s))

   (e) Design Responsibilities First Energy Corp

6. Identification of Components Repaired, Modified, or Replacement Components

Name of Component	Name of Manufacturer	Manufacturer Serial No.	Nat. Board No.	Other ID.	Year Built	Repair, Replacement, or Modification	ASME Code Stamped
PIPING SYSTEM	GENERAL ELECTRIC	1B21	64084	1B21F41K	1985	REPLACEMENT	YES

7. Description of Work: Removed valve S/N 160888 and installed valve S/N 160883. Used 12 new inlet studs 1-5/8" HT # K745 and 12 new 1-5/8" hydra nuts HT# 590A. Continued in remarks.

8. Test Conducted: Hydrostatic- ☐ Pneumatic- ☐ Nominal Operating Pressure- ☒ Other- ☐

   Pressure 1032 psi Test Temperature 142 degrees F Code Case(s) N/A

NIS-2/NR-1 OWNER'S REPORT FOR REPAIRS OR REPLACEMENTS (Back)

PNPP No. 9308 Rev. 9/11/00 NQI-1741

9. Remarks: Used 16 new 1" hydra nuts HT# 591A. Used 16 new 1" studs HT# OG81

NO NAMEPLATE/STAMPING PERFORMED DUE TO THE INTERFACE CONTROLS OF RA-2370

BEING IN EFFECT AND JURISDICTIONAL AUTHORITY CONCURRENCE HAVING BEEN RECEIVED.

Note: Attach all applicable Manufacturer's Data Reports. Supplemental sheets such as lists, sketches, or drawings may be used, provided (1) size is 8 1/2 in. x 11 in., (2) information in items 1 through 6 of this report is included on each sheet, and (3) each sheet is numbered and the number of sheets is recorded on the front of this form.

CERTIFICATE OF COMPLIANCE

I, Michael J Tepsick, certify that to the best of my knowledge and belief the statements made in this report are correct and the repair, modification or replacement of the items described above conforms to Section XI of the ASME Code and to the National Board Inspection Code "NR" rules.

National Board Certificate of Authorization No. 33 to use the "NR stamp expires 28 Sept., 20 08

Date 14 May, 20 07 Signed FENOC-PNPP (name of repair organization) [signature] (authorized representative) OC Tech. (title)

CERTIFICATE OF INSPECTION/INSERVICE INSPECTION

I, THOMAS G. LAPS, holding a valid commission issued by The National Board of Boiler and Pressure Vessel Inspectors and certificate of competency issued by the jurisdiction of OHIO and employed by HSB CT. of Hartford, Conn. have inspected the repair, modification or replacement described in this report on MAY 15, 20 07 and state that to the best of my knowledge and belief, this repair, modification or replacement has been completed in accordance with Section XI of the ASME Code and the National Board Inspection Code "NR" rules.

By signing this certificate, neither the undersigned nor my employer makes any warranty, expressed or implied, concerning the work described in this report. Furthermore, neither the undersigned nor my employer shall be liable in any manner for any personal injury, property damage or loss of any kind arising from or connected with this inspection.

Date 5/15, 20 07 Signed Thomas G. Laps (inspector) Commissions NB 9330 NIA OHIO COMM (National Board (include endorsements), and jurisdiction, and no.)

As Required by the Provisions of the ASME Code, Section III, Div. I 1B21-382 PAGE 2 OF

1. Manufactured by G. Dikkers & Co. NV. Hengelo (O) The Netherlands
(Name and Address of N Certificate Holder)

2. Manufactured for General Electric, San Jose, California
(Name and Address of Purchaser or Owner)

3. Location of Installation Perry I + II spares North Perry Ohio
(Name and Address)

G 471-6/125.04.03 rev. 6 143 1979
(CRN) G471 (Drawing No.) (Nat'l. Bd. No.) 160883 (Year Built)

5. Valve (Model No., Series No.) Safety/Relief Identifying Nos. (N Certificate Holder's Serial No.)

Type Safety, Safety Relief, Pilot, Power Actuated

Orifice Size 4.84 inch Nominal Inlet Size 8" (Flange) inch Outlet Size 10" inch

6. Set Pressure (PSIG) 1165 Rated Temperature 585 °F

Stamped Capacity 905732 Sat. Steam lbs/hr @ 2350 % Overpressure Blowdown (PSIG) 95.50

Hydrostatic Test (PSIG) Inlet 975 Outlet (Applicable to valves for closed systems only)

7. Pressure Retaining Pieces

	Serial No. or Identification	Material Specification Incl. Type or Grade
Body	05.19.8 s/n 4	SA 352 LCB
Bonnet or Yoke	01.12.8 s/n 0	SA 352 LCB
Support Rods		
Nozzle	AJW 085	SA 350 LF2
Disc	55.08.9 s/n 1B	SA 351 CF3A
Spring Washers	26.30.95 s/n 122	45 Cr Mo V 67
Adjusting Screw	ASB 103 ASB 018	SA 182 F 316
Spindle	APG 011	A 564-74 type 630 cond. H1100
Spring		
Bolting	ANY/ANZ/AJS/AJM/APB/ANZ CAL/AVS/ALR/AUY	SA 193-B7/SA 194-7/SA 194-2H
Other Pieces*		
Liner	53.40.8 s/n 1	SA 351 CF3A
* Cover	53.23.8 s/n 9	SA 351 CF8M
Vent. Pipe	AWB 010	SA 105
Flanges	AKF 061 ASA 101	SA 105

Max. outside diam. valve body 478 mm (18.82)

Max. outside length valve 1645 mm (64.77)

* Supplemental sheets in form of lists, sketches or drawings may be used provided (1) size is 8-1/2" × 11", (2) information in Items 1-2 on this Data Report is included on each sheet, and (3) each sheet is numbered and number of sheets is recorded at top of this form.

(10/77) This form (E00042) may be obtained from the Order Dept., ASME, 345 E. 47th St., New York, N.Y. 10017

CERTIFICATE OF COMPLIANCE

We certify that the statements made in this report are correct and that this valve conforms to the rules of construction of the ASME Code for Nuclear Power Plant Components, Section III, Div. 1., 1974 Edition, Addenda sum.'76 (Date), Code Case No N.A.

Date 81-07-01 Signed G. Dikkers & Co NV (N Certificate Holder) by [signature]

Our ASME Certificate of Authorization No. 1806 to use the NV (NV) symbol expires 1st. July 1980 (Date)

CERTIFICATION OF DESIGN

Design information on file at General Electric and Perry I + II spares

Stress analysis report (Class 1 only) on file at General Electric and Perry I + II spares

Design specifications certified by[1] Boyd P. Brooks

PE State California Reg. No. 13655

Stress report certified by[1] Robert L. Weiss

PE State California/Illinois Reg. No. M 14921/62-25749

[1] Signature not required—list name only.

CERTIFICATE OF SHOP INSPECTION

I, the undersigned, holding a valid commission issued by the National Board of Boiler and Pressure Vessel Inspectors and the State or Province of Ontario (Canada) and employed by Royal Indemnity Co. of New York have inspected the pump, or valve, described in this Data Report on 26 September, 19 79 and state that to the best of my knowledge and belief, the N Certificate Holder has constructed this pump, or valve, in accordance with the ASME Code for Nuclear Power Plant Components.

By signing this certificate, neither the Inspector nor his employer makes any warrant, expressed or implied, concerning the equipment described in this Data Report. Furthermore, neither the Inspector nor his employer shall be liable in any manner for any personal injury or property damage or a loss of any kind arising from or connected with this inspection.

Date 7 July, 19 81

Signed [signature] (Inspector) Commissions N.B. 6653. (Nat'l. Bd., State Prov. and No.)

1B21-383

NIS-2/NR-1 OWNER'S REPORT FOR REPAIRS OR REPLACEMENTS

As required by the Provisions of the ASME Code Section XI

PNPP No. 9308 Rev. 9/11/00 NQI-1741

1. Owner: FIRSTENERGY CORP
10 Center Road, Perry, Ohio 44081
Date 5/16/07
Sheet 1 of 3

2. Plant: Perry Nuclear Power Plant (PNPP)
10 Center Road, Perry, Ohio 44081
(Repair Org P.O. No., etc.)
Unit ONE
ORDER 200170106

3. Work Performed By: FIRSTENERGY Nuclear Operating Company PNPP
10 Center Road, Perry, Ohio 44081
Type Code Symbol Stamp NR
Authorization No. 33
Expiration Date 9-28-08

4. Identification of System: 1B21 NUCLEAR BOILER SYSTEM (1B21)

5 (a) Applicable Construction Code: ASME SECTION III NB (NAME/SECTION/DIVISION/CLASS), 1974 Edition

WINTER 19 75 Addenda Code Case(s) 1728, 272,1644-4

(b) Construction Code used for repairs, modifications, or replacements: 1974 (Edition) WINTER 75 (Addenda) • (Code Case(s))

(c) ASME Code Section XI applicable for Inservice Inspection: 1989 (Edition) N/A (Addenda) N/A (Code Case(s))

(d) Applicable Edition of Section XI Utilized for Repairs, Modification, or Replacements.

19 89, EDITION 19 N/A Addenda N/A Code Case(s)

(e) Design Responsibilities FIRSTENERGY NUCLEAR OPERATING COMPANY PNPP

6 Identification of Components Repaired, Modified, or Replacement Components

Name of Component	Name of Manufacturer	Manufacturer Serial No.	Nat. Board No	Other ID	Year Built	Repair, Replacement, or Modification	ASME Code Stamped
VALVE	ATWOOD MORILL	7-560	N/A	1B21 F028C	1976	REPLACEMENT	YES

7. Description of Work: Replaced poppet with new poppet S/N 5, HT# 215143 using (18)-DOUBLE ENDED STUDS HT TRACE # M23553, and (18)-HEAVY HEX NUTS (6) HT.TRACE # J206, AND (12)HT TRACE # OL53.

8. Test Conducted: Hydrostatic- ☐ Pneumatic- ☐ Nominal Operating Pressure- ☒ Other- ☐

Pressure 1032 psi Test Temperature 142 degrees F Code Case(s) N/A

NIS-2/NR-1 OWNER'S REPORT FOR REPAIRS OR REPLACEMENTS (Back)

PNPP No. 9308 Rev. 9/11/00 NQI-1741

9. Remarks N/A

NO NAMEPLATE/STAMPING PERFORMED DUE TO THE INTERFACE CONTROLS OF RA-2370 BEING IN EFFECT AND JURISDICTIONAL AUTHORITY CONCURRENCE HAVING BEEN RECEIVED.

Note: Attach all applicable Manufacturer's Data Reports. Supplemental sheets such as lists, sketches, or drawings may be used, provided (1) size is 8 1/2 in. x 11 in., (2) information in items 1 through 6 of this report is included on each sheet, and (3) each sheet is numbered and the number of sheets is recorded on the front of this form

CERTIFICATE OF COMPLIANCE

I, JOHN W. MESSENGER, certify that to the best of my knowledge and belief the statements made in this report are correct and the repair, modification or replacement of the items described above conforms to Section XI of the ASME Code and to the National Board Inspection Code "NR" rules.

National Board Certificate of Authorization No. 33 to use the "NR stamp expires Sept 28, 20 08

Date 5/16/ 2007 Signed FENOC-PNPP (name of repair organization) (authorized representative) QE (title)

CERTIFICATE OF INSPECTION/INSERVICE INSPECTION

I, THOMAS G. LAPS, holding a valid commission issued by The National Board of Boiler and Pressure Vessel Inspectors and certificate of competency issued by the jurisdiction of OHIO and employed by HSB CT. of HARTFORD, CT. have inspected the repair, modification or replacement described in this report on MAY 16, 20 07 and state that to the best of my knowledge and belief, this repair, modification or replacement has been completed in accordance with Section XI of the ASME Code and the National Board Inspection Code "NR" rules

By signing this certificate, neither the undersigned nor my employer makes any warranty, expressed or implied, concerning the work described in this report. Furthermore, neither the undersigned nor my employer shall be liable in any manner for any personal injury, property damage or loss of any kind arising from or connected with this inspection.

Date 5/16, 20 07 Signed (inspector) Commissions NB 9330 NIA OHIO COMM. (National Board (include endorsements), and jurisdiction, and no.)

1B21-383 2 of 3

FORM NPV-1 MANUFACTURERS' DATA REPORT FOR NUCLEAR PUMPS OR VALVES*

As Required by the Provisions of the ASME Code Rules

1. Manufactured by Atwood & Morrill Co. Inc., Salem, Mass. 01970 Order No. 13560-01
(Name & Address of Manufacturer)

2. Manufactured for General Electric Co., San Jose, California Order No. 205-AF774
(Name and Address)

3. Owner Cleveland Electric Illuminating Co.

4. Location of Plant North Perry, Ohio

5. Pump or Valve Identification Valve S/N 7-560 26" 575# Main Steam Isolation Valve

For Service in Main Steam Piping System
(Brief description of service for which equipment was designed)

(a) Drawing No. 13560-01-H Rev. 3 Prepared by Robert J. Knox

(b) National Board No. N/A

6. Design Conditions 1375 (Pressure) psi 586 (Temperature) °F

7. The material, design, construction, and workmanship complies with ASME Code Section III, Class 1

Edition 1974, Addenda Date N/A, Case No. 1622

Mark No.	Material Spec. No.	Manufacturer	Remarks
(a) Castings			
Body RT# N2675	SA216 WCB	Quaker Alloy	S/N 7-560
(b) Forgings			
Poppet	SA350 Gr. LF-2	Cann & Saul	S/N 8-560
Cover	SA105 (QT)	Cann & Saul	S/N 7-560

*Supplemental sheets in form of lists, sketches or drawings may be used provided (1) size is 8½" x 11", (2) information in items, 1, 2, 5a and 5b on this data report is included on each sheet, and (3) each sheet is numbered and number of sheets is recorded at top of this form.

FORM NPV-1 (back)

Mark No.	Material Spec. No.	Manufacturer	Remarks
(c) Bolting			
Cover Studs (18)	SA540 Gr.B 23 Class 5	Jos.Dyson&Sons	Heat# 114188
Cover Nuts (18)	SA540 Gr.B 23 Class 5	Jos.Dyson&Sons	Heat#134951
(d) Other Parts			
* 3/4 - Nipples (2)	SA106 Gr.B	U.S.Steel	S/N 7-560
* 45° Elbow	SA105	Vogt Mach.Co.	S/N 15-560

* Note: These items comply with the CODE for Material Construction and workmanship, but are not included as far as design is concerned.

8. Hydrostatic test Body 2175 Poppet 1450 psi.

CERTIFICATION OF DESIGN

Design information on file at General Electric Co., San Jose, California

Stress analysis report on file at Atwood & Morrill Co. Inc., Salem, Mass.

Design specifications certified by Ranjit Ranjan Ghosh (1) Prof. Eng. State Calif Reg. No. 16371

Stress analysis report certified by Herbert Cook (1) Prof. Eng. State Mass. Reg. No. 10981

(1) Signature not required. List name only.

We certify that the statements made in this report are correct.

Date 3-24 19 76 Signed Atwood&Morrill Co.Inc By [signature] Quality Control Manager
(Manufacturer)

Certificate of Authorization No. N812 expires May 7, 1977

CERTIFICATE OF SHOP INSPECTION

I, the undersigned, holding a valid commission issued by the National Board of Boiler and Pressure Vessel Inspectors and/or the State of Province of Massachusetts and employed by Hartford Steam Boiler Insp. & Ins.Co. of Hartford, Conn. have inspected the equipment described in this Data Report on 3-24 19 76, and state that to the best of my knowledge and belief, the Manufacturer has constructed this equipment in accordance with the applicable Subsections of ASME Code, Section III.

By signing this certificate, neither the Inspector nor his employer makes any warranty, expressed or implied, concerning the equipment described in this Data Report. Furthermore, neither the Inspector nor his employer shall be liable in any manner for any personal injury or property damage or a loss of any kind arising from or connected with this inspection.

Date 3-24 1976

[signature] Commissions Mass. 1264 Ohio Commission
(Inspector) (National Board, State, Province and No.)
Gerard Cocuzzo

1B21-383 3 of 3

FORM N-2 CERTIFICATE HOLDERS' DATA REPORT FOR IDENTICAL NUCLEAR PARTS AND APPURTENANCES*

As Required by the Provisions of the ASME Code, Section III

Not To Exceed One Day's Production

Pg 1 of 1

1. Manufactured and certified by Atwood & Morrill Co., Inc., 285 Canal Street, Salem, MA 01970 (name and address of NPT Certificate Holder)

2. Manufactured for Cleveland Electric 10 Center Road, North Perry, Ohio 44081 (name and address of purchaser)

3. Location of installation Perry Nuclear Power Plant, 10 Center Rd, Dock No. 1, N. Perry OH 44081 (name and address)

4. Type *32467-626-D, Rev. 0 (drawing no.) SA105 (mat'l. spec. no.) 76,200 Psi (tensile strength) N/A (CRN) 1991 (year built)

5. ASME Code, Section III 1974 (edition) NO (addenda date) 1 (class) N/A (Code Case no.)

6. Fabricated in accordance with Const. Spec. (Div. 2 only) N/A (name) Revision N/A Date N/A

7. Remarks: *Dwg. prepared by A&M. (A&M S.O. 30693-01) Popper for 26" MSIV Valve on Assembly Dwg. 13560-01-M, Rev. 1. This certification meets the requirements of ASME Section III 1974 Edition NO Addenda.

8. Nom. thickness (in.) 8 1/8" Min. design thickness (in.) 4.310" Dia. ID (ft & in.) N/A Length overall (ft & in.) N/A

9. When applicable, Certificate Holders' Data Reports are attached for each item of this report.

	Part or Appurtenance Serial Number	National Board No. in Numerical Order		Part or Appurtenance Serial Number	National Board Number in Numerical Order
(1)	HT 215143	N/A	(26)		
(2)	S/N 5		(27)		
(3)			(28)		
(4)			(29)		
(5)			(30)		
(6)			(31)		
(7)			(32)		
(8)			(33)		
(9)			(34)		
(10)			(35)		
(11)			(36)		
(12)			(37)		
(13)			(38)		
(14)			(39)		
(15)			(40)		
(16)			(41)		
(17)			(42)		
(18)			(43)		
(19)			(44)		
(20)			(45)		
(21)			(46)		
(22)			(47)		
(23)			(48)		
(24)			(49)		
(25)			(50)		

10. Design pressure 1375 psi. Temp. 586 °F Hydro. test pressure N/A psi. Temp. °F

Supplemental information in the form of lists, sketches, or drawings may be used provided: (1) size is 8½ x 11; (2) information in items 1 and 2 on this Data Report is included on each sheet; (3) each sheet is numbered and the number of sheets is recorded at the top of this form.

(12/86) This form (E00040) may be obtained from the Order Dept., ASME, 22 Law Drive, Box 2300, Fairfield, NJ 07007-2300.

EGILOIA HW

1 8280 000 0156

FORM N-2 (back)

HT. 215143

Mfr. Serial No. 5

CERTIFICATION OF DESIGN

Design specifications certified by Clyde T. Nieh (Name of Registered Engineer) P.E. State CALIF Reg. no. 15587

Design report certified by Herbert Cook (Name of Registered Engineer) P.E. State MA Reg. no. 10981

CERTIFICATE OF SHOP COMPLIANCE

We certify that the statements made in this report are correct and that this (these) Popper conforms to the rules of construction of the ASME Code, Section III.

NPT Certificate of Authorization No. N2607 Expires 6-13-92

Date 11/25/91 Name Atwood & Morrill Co., Inc. (NPT Certificate Holder) Signed [signature] (Authorized Representative)

CERTIFICATE OF SHOP INSPECTION

I, the undersigned, holding a valid commission issued by the National Board of Boiler and Pressure Vessel Inspectors and the State or Province of New York and employed by H.S.B.I. & I. Co. of Hartford, CT have inspected these items described in this Data Report on November 25, 1991 and state that, to the best of my knowledge and belief, the Certificate Holder has fabricated these parts or appurtenances in accordance with the ASME Code, Section III. Each part listed has been authorized for stamping on the date shown above.

By signing this certificate, neither the inspector nor his employer makes any warranty, expressed or implied, concerning the equipment described in this Data Report. Furthermore, neither the inspector nor his employer shall be liable in any manner for any personal injury or property damage or loss of any kind arising from or connected with this inspection.

Date 11/25/91 Signed [signature] (Authorized Inspector) Commissions NB1100-2-N, NYSOCE (Nat'l. Bd. incl. endorsements) state or prov. and no.)

1B33-127 Pg 1 of 2

NIS-2/NR-1 OWNER'S REPORT FOR REPAIRS OR REPLACEMENTS

As required by the Provisions of the ASME Code Section XI

PNPP No. 9308 Rev. 9/11/00 NQI-1741

1. Owner: FIRSTENERGY CORP. Date 4-27-07
   10 Center Road, Perry, Ohio 44081 Sheet 1 of 2

2. Plant: Perry Nuclear Power Plant (PNPP) Unit 1
   10 Center Road, Perry, Ohio 44081 200063010 (Repair Org. P.O. No., etc.)

3. Work Performed By: FIRSTENERGY Nuclear Operating Company PNPP Type Code Symbol Stamp NR
   10 Center Road, Perry, Ohio 44081 Authorization No. 33
   Expiration Date 9-28-08

4. Identification of System: Reactor Recirculation System 1B33

5. (a) Applicable Construction Code: ASME Section III Class 1 - NF ,1974 Edition
   NAME/SECTION/DIVISION/CLASS
   Winter 1975 Addenda Code Case(s) 1728, 1644-4, 272
   (b) Construction Code used for repairs, modifications, or replacements: 1974 (Edition) W75 (Addenda) N/A (Code Case(s))
   (c) ASME Code Section XI applicable for Inservice Inspection: 1989 (Edition) N/A (Addenda) N/A (Code Case(s))
   (d) Applicable Edition of Section XI Utilized for Repairs, Modification, or Replacements:
   1989, N/A 19 N/A Addenda N/A (Code Case(s))
   (e) Design Responsibilities FENOC

6. Identification of Components Repaired, Modified, or Replacement Components

Name of Component	Name of Manufacturer	Manufacturer Serial No.	Nat. Board No.	Other ID.	Year Built	Repair, Replacement, or Modification	ASME Code Stamped
Piping System	General Electric	1B33	64076	1B33G70 64B (see remarks)	1985	Replacement	YES

7. Description of Work: Replace 100 KIP, E-Systems snubber serial number 60 (existing) with replacement serial number 57 (new)

8. Test Conducted: Hydrostatic- ☐ Pneumatic- ☐ Nominal Operating Pressure- ☐ Other- ☐
   Pressure N/A psi Test Temperature N/A degrees F Code Case(s) N/A

NIS-2/NR-1 OWNER'S REPORT FOR REPAIRS OR REPLACEMENTS (Back)

PNPP No. 9308 Rev. 9/11/00 NQI-1741

9. Remarks: Functional Location number 1B33G7064B was originally installed as a General Electric hanger number 1B33-G006-S369B as identified on isometric 34-0021-00001

Note: Attach all applicable Manufacturer's Data Reports. Supplemental sheets such as lists, sketches, or drawings may be used, provided (1) size is 8 1/2 in. x 11 in., (2) information in items 1 through 6 of this report is included on each sheet, and (3) each sheet is numbered and the number of sheets is recorded on the front of this form.

CERTIFICATE OF COMPLIANCE

I, Russ Matthys, certify that to the best of my knowledge and belief the statements made in this report are correct and the repair, modification or replacement of the items described above conforms to Section XI of the ASME Code and to the National Board Inspection Code "NR" rules.

National Board Certificate of Authorization No. 33 to use the "NR stamp expires 9-28-2008

Date 4-28-2007 Signed FENOC-PNPP (name of repair organization) Russ Matthys (authorized representative) QC Supervisor (title)

CERTIFICATE OF INSPECTION/INSERVICE INSPECTION

I, Thomas G. Laps holding a valid commission issued by The National Board of Boiler and Pressure Vessel Inspectors and certificate of competency issued by the jurisdiction of OHIO and employed by HSB CT. of Hartford, CT. have inspected the repair, modification or replacement described in this report on April 28 20 07 and state that to the best of my knowledge and belief, this repair, modification or replacement has been completed in accordance with Section XI of the ASME Code and the National Board Inspection Code "NR" rules.

By signing this certificate, neither the undersigned nor my employer makes any warranty, expressed or implied, concerning the work described in this report. Furthermore, neither the undersigned nor my employer shall be liable in any manner for any personal injury, property damage or loss of any kind arising from or connected with this inspection.

Date 4/28, 20 07 Signed Thomas G Laps (inspector) Commissions NB 9330 "N"I"A" Ohio Comm (National Board (include endorsements), and jurisdiction, and no.)

0002 SB 15 06 18

1B33-127 PG 2 OF 2

DIR 5988
9

FORM NF-1 MANUFACTURER'S DATA REPORT FOR COMPONENT SUPPORTS
As Required by the Provisions of the ASME Code Rules, Section III, Division 1

1. Manufactured by E-Systems, Inc., Montek Division, Salt Lake City, Utah
(Name and address of manufacturer)

2. Manufactured for General Electric Company, San Jose, California
(Name and address of purchaser or owner)

3. Location of Installation Perry I Nuclear Power Plant, Recirc. System, North Perry, Ohio

4. Identification

(a) Component Support I.D. No.	(b) Canadian Registration No.	(c) Applicable Drawing with List Rev. & Date	(d) Stress Report or Load Capacity Data Sheet	(e) Type of Component Support	(f) Class	(g) Nat'l Board No.	(h) Year Built
(1) 057	N/A	1326 10A	LCD1S-7000-502-10	Linear	1	None	1978
(2) 058	"	"	"	"	"	"	"
(3) 059	"	"	"	"	"	"	"
(4) 060	"	"	"	"	"	"	"
(5) 061	"	"	"	"	"	"	"
(6) 062	"	"	"	"	"	"	"
(7) 063	"	"	"	"	"	"	"
(8) 064	"	"	"	"	"	"	"
(9) 065	"	"	"	"	"	"	"
(10) 066	"	"	"	"	"	"	"

GEIC Contract P-1008-L

CERTIFICATE OF COMPLIANCE

We certify that the components made in accordance with the data contained in this report are in accordance with the rules of construction of the ASME Code for Nuclear Power Plant Components, Section III, Division 1, Edition 1974 Addenda Winter 1976

Code Case No. 1A1445-1, 1A82-1, 1706

Date 30 Sept. 1978 Signed E-Systems, Inc., Montek Div. By W. Sentright
(Manufacturer) (Authorized Representative)

Our ASME Certificate of Authorization No. 1356 to use the NPT
(NPT)

Symbol expires 1 March 1979
(Date)

CERTIFICATION OF DESIGN

Design Information on File at E-Systems, Inc., Montek Division, Salt Lake City, Utah

Stress Report or Load Capacity Data Sheet on File at E-Systems, Inc., Montek Division, Salt Lake City, Utah

Design Specifications Certified by (1) Robert Lee Warren III PE State Utah

Reg. No. 3942

Stress Analysis Report or Load Capacity Data Sheet Certified by (1) Robert Lee Warren III

PE State Utah Reg. No. 3942

(1) Use name only, signature not required.

*Supplementary sheets in form of lists, sketches, or drawings may be used provided (1) size is 8½ x 11, (2) information in items 1, 2, 3, 4, 5 on this data report is included on each sheet, and (3) each sheet is numbered and number of sheets is recorded at top of this form.

(1/76) (This form (E00075) is available from the Order Dept., ASME, 345 E. 47 St., New York, N.Y. 10017)

PAGE NO. 2 of 2

FORM NP-1 (Back)

CERTIFICATE OF SHOP INSPECTION

I, the undersigned, holding a valid commission issued by the National Board of Boiler and Pressure Vessel Inspectors and the State or Province of Utah and employed by Royal Indemnity Ins. Co. of New York, New York have inspected the component supports described in this Manufacturers' Data Report on December 30, 1978 and state that to the best of my knowledge and belief the Manufacturer has constructed these component supports in accordance with the ASME Code for Nuclear Power Plant Components.

By signing this certificate, neither the Inspector nor his employer makes any warranty, expressed or implied, concerning the component supports described in this Manufacturers' Data Report. Furthermore, neither the Inspector nor his employer shall be liable in any manner for any personal injury or property damage or loss of any kind arising from or connected with this inspection.

Date 12/30/78

Signed [illegible] Commissions Utah 2

(Insert date, State (Prov.) and No.)

CERTIFICATION OF FIELD INSPECTION

I, the undersigned, holding a valid commission issued by the National Board of Boiler and Pressure Vessel Inspectors and the State or Province of _____ and employed by _____ have inspected the component supports described in this Manufacturers' Data Report on the date(s) _____ and state that to the best of my knowledge and belief the Manufacturer has constructed these component supports in accordance with the ASME Code for Nuclear Power Plant Components.

By signing this certificate, neither the Inspector nor his employer makes any warranty, expressed or implied, concerning the component supports described in this Manufacturers' Data Report. Furthermore, neither the Inspector nor his employer shall be liable in any manner for any personal injury or property damage or loss of any kind arising from or connected with this inspection.

Date _____

Signed _____ Commissions _____

(Insert date, State (Prov.) and No.)

PAGE NO. 26

1 B33-128 Pg 1 of 2

NIS-2/NR-1 OWNER'S REPORT FOR REPAIRS OR REPLACEMENTS

As required by the Provisions of the ASME Code Section XI

PNPP No. 9308 Rev. 9/11/00 NQI-1741

1. Owner: FIRSTENERGY CORP. Date 4-27-07
   10 Center Road, Perry, Ohio 44081 Sheet 1 of 2

2. Plant: Perry Nuclear Power Plant (PNPP) Unit 1
   10 Center Road, Perry, Ohio 44081 200063012 (Repair Org. P.O. No., etc.)

3. Work Performed By: FIRSTENERGY Nuclear Operating Company PNPP Type Code Symbol Stamp NR
   10 Center Road, Perry, Ohio 44081 Authorization No. 33
   Expiration Date 9-28-08

4. Identification of System: Reactor Recirculation System 1B33

5. (a) Applicable Construction Code: ASME Section III Class 1 - NF ,1974 Edition
   NAME/SECTION/DIVISION/CLASS
   Winter 1975 Addenda Code Case(s) 1728, 1644-4, 272

   (b) Construction Code used for repairs, modifications, or replacements: 1974 (Edition) W75 (Addenda) N/A (Code Case(s))

   (c) ASME Code Section XI applicable for Inservice Inspection: 1989 (Edition) N/A (Addenda) N/A (Code Case(s))

   (d) Applicable Edition of Section XI Utilized for Repairs, Modification, or Replacements:
   1989, N/A 19 N/A Addenda N/A (Code Case(s))

   (e) Design Responsibilities FENOC

6. Identification of Components Repaired, Modified, or Replacement Components

Name of Component	Name of Manufacturer	Manufacturer Serial No.	Nat. Board No.	Other ID.	Year Built	Repair, Replacement, or Modification	ASME Code Stamped
Piping System	General Electric	1B33	64076	1B33G70 66B (see remarks)	1985	Replacement	YES

7. Description of Work: Replace 100 KIP, E-Systems snubber serial number 59 (existing) with replacement serial number 26 (new)

8. Test Conducted: Hydrostatic- ☐ Pneumatic- ☐ Nominal Operating Pressure- ☐ Other- ☐
   Pressure NA psi Test Temperature NA degrees F Code Case(s) N/A

NIS-2/NR-1 OWNER'S REPORT FOR REPAIRS OR REPLACEMENTS (Back)

PNPP No. 9308 Rev. 9/11/00 NQI-1741

9. Remarks: Functional Location number 1B33G7066B was originally installed as a General Electric hanger number 1B33-G006-S371B as identified on isometric 34-0021-00001

Note: *Attach all applicable Manufacturer's Data Reports. Supplemental sheets such as lists, sketches, or drawings may be used, provided (1) size is 8 1/2 in. x 11 in., (2) information in items 1 through 6 of this report is included on each sheet, and (3) each sheet is numbered and the number of sheets is recorded on the front of this form*

CERTIFICATE OF COMPLIANCE

I, Russ Matthys, certify that to the best of my knowledge and belief the statements made in this report are correct and the repair, modification or replacement of the items described above conforms to Section XI of the ASME Code and to the National Board Inspection Code "NR" rules.

National Board Certificate of Authorization No. 33 to use the "NR stamp expires 9-28-2008

Date 4-27-2007 Signed FENOC-PNPP (*name of repair organization*) Russ Matthys (*authorized representative*) QC Supervisor (*title*)

CERTIFICATE OF INSPECTION/INSERVICE INSPECTION

I, Thomas G. Laps holding a valid commission issued by The National Board of Boiler and Pressure Vessel Inspectors and certificate of competency issued by the jurisdiction of OHIO and employed by HSB CT. of Hartford, CT. have inspected the repair, modification or replacement described in this report on April 27 20 07 and state that to the best of my knowledge and belief, this repair, modification or replacement has been completed in accordance with Section XI of the ASME Code and the National Board Inspection Code "NR" rules.

By signing this certificate, neither the undersigned nor my employer makes any warranty, expressed or implied, concerning the work described in this report. Furthermore, neither the undersigned nor my employer shall be liable in any manner for any personal injury, property damage or loss of any kind arising from or connected with this inspection.

Date 4/27, 20 07 Signed Thomas G. Laps (*inspector*) Commissions NB 9330 "N"I"A" Ohio Comm (*National Board (include endorsements), and jurisdiction, and no.*)

1B33-128 Ps 2 of 2

(CORRECTED COPY)

FORM NF-1 MANUFACTURERS' DATA REPORT FOR COMPONENT SUPPORTS*
As Required by the Provisions of the ASME Code Rules, Section III, Division 1

1. Manufactured by E-Systems, Inc., Montek Division, Salt Lake City, UT (Name and address of manufacturer)
2. Manufactured for General Electric Company, San Jose, California (Name and address of purchaser or owner)
3. Location of Installation Black Fox 2 R.S., Tulsa, Oklahoma 74102
4. Identification

	(a) Component Support I.D. No.	(b) Canadian Registration No.	(c) Applicable Drawings with Last Rev. & Date	(d) Stress Report or Load Capacity Data Sheet	(e) Type of Component Support	(f) Class	(g) Nat'l Board No.	(h) Year Built
(1)	026	N/A	157510	LC0152000-602	Linear	1	None	1981
(2)	015	"	152210	"	"	"	"	"
(3)								
(4)								
(5)								
(6)								
(7)								
(8)								
(9)								
(10)								

5. Remarks: * - To correct clerical error. Added -1 [illegible] 4/30/82

CERTIFICATE OF COMPLIANCE

We certify that the statements made in this report are correct, and that these components supports conform to the rules of construction of the ASME Code for Nuclear Power Plant Components, Section III, Division 1, Edition 1977 Addenda Winter 1977 (Date)
Code Case No. 1644-R, 1682-1, 1706, N242-1.*
Date Dec. 31, 1981 Signed E-Systems, Inc. - Montek Div by J. Lynch (Manufacturer)
Our ASME Certificate of Authorization No. 1356 to use the NPT (NPT)
Symbol expires 1 March 1982 (Date)

OCT 28 1982

CERTIFICATION OF DESIGN

Design Information on File at E-Systems, Inc., Montek Division, Salt Lake City, UT

Stress Report or Load Capacity Data Sheets on File at: E-Systems, Inc., Montek Division, Salt Lake City, UT

Design Specifications Certified by (1) M.D. Potter PE State CA

Reg. No. 25904

Stress Analysis Report or Load Capacity Data Sheets Certified by (1) Robert Lee Warren III

PE State Utah Reg. No. 3942

(1) List name only, signature not required.

* Supplemental sheets in form of lists, sketches or drawings may be used provided (1) size is 8½ in., (2) information in items 1, 2, 4c, 4g on this data report is included on each sheet, and (3) each sheet is numbered and number of sheets is recorded at top of this form.

(1/78) This form (E00075) is available from the Order Dept., ASME, 345 E. 47 St., New York, N.Y. 10017

DRAFT NO. 2-B

2554

FORM NF-1 (Back)

CERTIFICATE OF SHOP INSPECTION

I, the undersigned, holding a valid commission issued by the National Board of Boiler and Pressure Vessel Inspectors and the State or Province of Utah and employed by Royal Globe Ins. of New York, New York have inspected the component supports described in this Manufacturers' Data Report on Dec. 31, 19 81 and state that to the best of my knowledge and belief the Manufacturer has constructed these component supports in accordance with the ASME Code for Nuclear Power Plant Components.

By signing this certificate, neither the Inspector nor his employer makes any warranty, expressed or implied, concerning the component supports described in this Manufacturers' Data Report. Furthermore, neither the Inspector nor his employer shall be liable in any manner for any personal injury or property damage or a loss of any kind arising from or connected with this inspection.

Date 31 Dec. 1981

Signed R. L. Rockhouse Commissions Utah 2
(Nat'l Bd., State, Prov., and No.)

CERTIFICATION OF FIELD INSPECTION

I, the undersigned, holding a valid commission issued by the National Board of Boiler and Pressure Vessel Inspectors and the State or Province of _____ and employed by _____ of _____ have compared the statements in this Manufacturers' Data Report with the described component supports and state that the parts referred to as data items _____, not included in the certificate of shop inspection, have been inspected by me and that to the best of my knowledge and belief the Manufacturer has constructed these component supports in accordance with the ASME Code for Nuclear Power Plant Components.

By signing this certificate neither the Inspector nor his employer makes any warranty, expressed or implied, concerning the component supports described in this Manufacturers' Data Report. Furthermore, neither the Inspector nor his employer shall be liable in any manner for any personal injury or property damage or a loss of any kind arising from or connected with this inspection.

Date _____

Signed _____ Commissions _____
(Nat'l Bd., State, Prov., and No.)

U.S.E.P.C.
OCT 28 1982

NF NO. 2-C

1B33-129 Pg 1 of 2

NIS-2/NR-1 OWNER'S REPORT FOR REPAIRS OR REPLACEMENTS

As required by the Provisions of the ASME Code Section XI

PNPP No. 9308 Rev. 9/11/00 NQI-1741

1. Owner: FIRSTENERGY CORP. Date 5-2-2007
   10 Center Road, Perry, Ohio 44081 Sheet 1 of 2

2. Plant: Perry Nuclear Power Plant (PNPP) Unit 1
   10 Center Road, Perry, Ohio 44081 200063011
   (Repair Org. P.O. No., etc.)

3. Work Performed By: FIRSTENERGY Nuclear Operating Company PNPP Type Code Symbol Stamp NR
   10 Center Road, Perry, Ohio 44081 Authorization No. 33
   Expiration Date 9-28-08

4. Identification of System: Reactor Recirculation System 1B33

5. (a) Applicable Construction Code: ASME Section III Class 1 - NF ,1974 Edition
   NAME/SECTION/DIVISION/CLASS
   Winter 1975 Addenda Code Case(s) 1728, 1644-4, 272

   (b) Construction Code used for repairs, modifications, or replacements: 1974 (Edition) W75 (Addenda) N/A (Code Case(s))

   (c) ASME Code Section XI applicable for Inservice Inspection: 1989 (Edition) N/A (Addenda) N/A (Code Case(s))

   (d) Applicable Edition of Section XI Utilized for Repairs, Modification, or Replacements:
   1989, N/A 19 N/A Addenda N/A (Code Case(s))

   (e) Design Responsibilities FENOC

6. Identification of Components Repaired, Modified, or Replacement Components

Name of Component	Name of Manufacturer	Manufacturer Serial No.	Nat. Board No.	Other ID.	Year Built	Repair, Replacement, or Modification	ASME Code Stamped
Piping System	General Electric	1B33	64076	1B33G70 65B (see remarks)	1985	Replacement	YES

7. Description of Work: Replace 100 KIP, E-Systems snubber serial number 61 (existing) with replacement serial number 63 (new)

8. Test Conducted: Hydrostatic- ☐ Pneumatic- ☐ Nominal Operating Pressure- ☐ Other- ☐
   Pressure NA psi Test Temperature NA degrees F Code Case(s) N/A

NIS-2/NR-1 OWNER'S REPORT FOR REPAIRS OR REPLACEMENTS (Back)

PNPP No. 9308 Rev. 9/11/00 NQI-1741

9. Remarks: Functional Location number 1B33G7065B was originally installed as a General Electric hanger number 1B33-G006-S370B as identified on isometric 34-0021-00001

Note: Attach all applicable Manufacturer's Data Reports. Supplemental sheets such as lists, sketches, or drawings may be used, provided (1) size is 8 1/2 in. x 11 in., (2) information in items 1 through 6 of this report is included on each sheet, and (3) each sheet is numbered and the number of sheets is recorded on the front of this form.

CERTIFICATE OF COMPLIANCE

I, Russ Matthys, certify that to the best of my knowledge and belief the statements made in this report are correct and the repair, modification or replacement of the items described above conforms to Section XI of the ASME Code and to the National Board Inspection Code "NR" rules.

National Board Certificate of Authorization No. 33 to use the "NR stamp expires 9-28-2008

Date 5-2-2007 Signed FENOC-PNPP (name of repair organization) Russ Matthys (authorized representative) QC Supervisor (title)

CERTIFICATE OF INSPECTION/INSERVICE INSPECTION

I, Thomas G. Laps holding a valid commission issued by The National Board of Boiler and Pressure Vessel Inspectors and certificate of competency issued by the jurisdiction of OHIO and employed by HSB CT. of Hartford, CT. have inspected the repair, modification or replacement described in this report on MAY 2, 20 07 and state that to the best of my knowledge and belief, this repair, modification or replacement has been completed in accordance with Section XI of the ASME Code and the National Board Inspection Code "NR" rules.

By signing this certificate, neither the undersigned nor my employer makes any warranty, expressed or implied, concerning the work described in this report. Furthermore, neither the undersigned nor my employer shall be liable in any manner for any personal injury, property damage or loss of any kind arising from or connected with this inspection.

Date 5/2, 20 07 Signed Thomas G. Laps (inspector) Commissions NB 9330 "N"I"A" Ohio Comm (National Board (include endorsements), and jurisdiction, and no.)

0002 SB 15 06 18

1B33-129 Pg 2 of 2

MR 5988
9

FORM NF-1 MANUFACTURERS' DATA REPORT FOR COMPONENT SUPPORTS*
As Required by the Provisions of the ASME Code Rules, Section III, Division 1

1. Manufactured by E-Systems, Inc., Montek Division, Salt Lake City, Utah
(Name and address of manufacturer)

2. Manufactured for General Electric Company, San Jose, California
(Name and address of purchaser or owner)

3. Location of Installation Perry I Nuclear Power Plant, Recirc. System, North Perry, Ohio

4. Identification

(a) Component Support I.D. No.	(b) Canadian Registration No.	(c) Applicable Drawing with Last Rev. & Date	(d) Stress Report or Load Capacity Data Sheet	(e) Type of Component Support	(f) Class	(g) Nat'l Board No.	(h) Year Built
(1) 057	N/A	1326 10A	LCDIS2009-302-10	Linear	1	None	1978
(2) 058	"	"	"	"	"	"	"
(3) 059	"	"	"	"	"	"	"
(4) 060	"	"	"	"	"	"	"
(5) 061	"	"	"	"	"	"	"
(6) 062	"	"	"	"	"	"	"
(7) 063	"	"	"	"	"	"	"
(8) 064	"	"	"	"	"	"	"
(9) 065	"	"	"	"	"	"	"
(10) 066	"	"	"	"	"	"	"

GEIC Contract P-1008-L

CERTIFICATE OF COMPLIANCE

We certify that the components made in the report are correct and that these component supports conform to the rules of construction of the ASME Code for Nuclear Power Plant Components, Section III, Division 1, Edition 1974, Addenda Winter 1976
Code Case No. 1542-1, 1892-1, 1706 (Other)

Date 30 Sept. 1978 Signed E-Systems, Inc., Montek Div. by W. S. Enright
(Manufacturer)

Our ASME Certificate of Authorization No. 1356 to use the NPT (NPT)

Symbol expires 1 March 1979
(Date)

CERTIFICATION OF DESIGN

Design Information on File at E-Systems, Inc., Montek Division, Salt Lake City, Utah

Stress Report or Load Capacity Data Sheets on File at E-Systems, Inc., Montek Division, Salt Lake City, Utah

Design Specifications Certified by (1) Robert Lee Warren III PE State Utah
Reg. No. 3942

Stress Analysis Report or Load Capacity Data Sheets Certified by (1) Robert Lee Warren III
PE State Utah Reg. No. 3942

(1) Use name only, signature not required.

*Supplemental sheets in form of lists, sketches or drawings may be used provided (1) size is 8½ x 11 in., (2) information in items 1, 2, 3, 4 on this data report is included on each sheet, and (3) each sheet is numbered and number of sheets is recorded at top of this form.

(1/76) This form (E00075) is available from the Order Dept., ASME, 345 E. 47 St., New York, N.Y. 10017

PAGE NO. 2 of 2

0 0 9 5 0 5 5 0

PIP 5788
8

FORM NF-1 (Back)

CERTIFICATE OF SHOP INSPECTION

I, the undersigned, holding a valid commission issued by the National Board of Boiler and Pressure Vessel Inspectors and the State or Province of Utah and employed by Royal Indemnity Ins. Co. of New York, New York, have inspected the component supports described in this Manufacturers' Data Report on September 30, 19 78 and state that to the best of my knowledge and belief, the Manufacturer has constructed these component supports in accordance with the ASME Code for Nuclear Power Plant Components.

By signing this certificate, neither the Inspector nor his employer makes any warranty, expressed or implied, concerning the component supports described in this Manufacturers' Data Report. Furthermore, neither the Inspector nor his employer shall be liable in any manner for any personal injury or property damage or loss of any kind arising from or connected with this inspection.

Date 9/30/78

Signed [signature] Commissions Utah 2
(Nat'l Bd., State, Prov., and No.)

CERTIFICATION OF FIELD INSPECTION

I, the undersigned, holding a valid commission issued by the National Board of Boiler and Pressure Vessel Inspectors and the State or Province of _____ and employed by _____ of _____ have examined the statements in this Manufacturers' Data Report with the described component supports and state that the parts referred to as Code items _____ not included in the certificate of shop inspection, have been inspected by me and that to the best of my knowledge and belief the Manufacturer has constructed these component supports in accordance with the ASME Code for Nuclear Power Plant Components.

By signing this certificate neither the Inspector nor his employer makes any warranty, expressed or implied, concerning the component supports described in this Manufacturers' Data Report. Furthermore, neither the Inspector nor his employer shall be liable in any manner for any personal injury or property damage or loss of any kind arising from or connected with this inspection.

Date _____

Signed _____ Commissions _____
(Nat'l Bd., State, Prov., and No.)

1C41-036

NIS-2/NR-1 OWNER'S REPORT FOR REPAIRS OR REPLACEMENTS

As required by the Provisions of the ASME Code Section XI

PNPP No. 9308 Rev. 9/11/00 NQI-1741

1. Owner: FIRSTENERGY CORP. Date 4/16/07
   10 Center Road, Perry, Ohio 44081 Sheet 1 of 1

2. Plant: Perry Nuclear Power Plant (PNPP) Unit 1
   10 Center Road, Perry, Ohio 44081 Order 200257554
   (Repair Org. P.O. No., etc.)

3. Work Performed By: FIRSTENERGY Nuclear Operating Company PNPP Type Code Symbol Stamp NR
   10 Center Road, Perry, Ohio 44081 Authorization No. 33
   Expiration Date 9/28/08

4. Identification of System: C41STANDBY LIQUID CONTROLS NC

5. (a) Applicable Construction Code: ASME SECTION III CLASS 3 ,1974 Edition
   NAME/SECTION/DIVISION/CLASS

   WINTER 19 75 Addenda Code Case(s) *N242,N272,N413, N240, 1644-5,1644-8

   (b) Construction Code used for repairs, modifications, or replacements: 1974 (Edition) W75 (Addenda) * (Code Case(s))

   (c) ASME Code Section XI applicable for Inservice Inspection: 1989 (Edition) NONE (Addenda) N/A (Code Case(s))

   (d) Applicable Edition of Section XI Utilized for Repairs, Modification, or Replacements:

   19 89 , _____ 19 N/A Addenda N/A (Code Case(s))

   (e) Design Responsibilities First Energy Corp

6. Identification of Components Repaired, Modified, or Replacement Components

Name of Component	Name of Manufacturer	Manufacturer Serial No.	Nat. Board No.	Other ID.	Year Built	Repair, Replacement, or Modification	ASME Code Stamped
PIPING SYSTEM	PULLMAN POWER	C-41	108	1C41-D0003	1985	REPLACEMENT	YES

7. Description of Work: REPLACED (6) 3/4"X10 SA 193 HT TRACE # 1G5257 CAP SCREWS, AND (8) ¾ X10 HEAVY HEX NUTS UNC-2B, HEAT TRACE # K534..

8. Test Conducted: Hydrostatic- ☐ Pneumatic- ☐ Nominal Operating Pressure- ☐ Other- ☐
   Pressure N/A psi Test Temperature N/A degrees F Code Case(s) N/A

NIS-2/NR-1 OWNER'S REPORT FOR REPAIRS OR REPLACEMENTS (Back)

PNPP No. 9308 Rev. 9/11/00 NQI-1741

9. Remarks:

VT-2 NOT REQUIRED. ONLY BOLTING WAS REPLACED ONE BOLT AT A TIME..

NO NAMEPLATE/STAMPING PERFORMED DUE TO THE INTERFACE CONTROLS OF RA-2370

BEING IN EFFECT AND JURISDICTIONAL AUTHORITY CONCURRENCE HAVING BEEN RECEIVED.

Note: Attach all applicable Manufacturer's Data Reports. Supplemental sheets such as lists, sketches, or drawings may be used, provided (1) size is 8 1/2 in. x 11 in., (2) information in items 1 through 6 of this report is included on each sheet, and (3) each sheet is numbered and the number of sheets is recorded on the front of this form.

CERTIFICATE OF COMPLIANCE

I, John messenger,certify that to the best of my knowledge and belief the statements made in this report are correct and the repair, modification or replacement of the items described above conforms to Section XI of the ASME Code and to the National Board Inspection Code "NR" rules.

National Board Certificate of Authorization No. 33 to use the "NR stamp expires 28 Sept., 20 08

Date 16 April, 20 07 Signed FENOC-PNPP (name of repair organization) (authorized representative) QC (title)

CERTIFICATE OF INSPECTION/INSERVICE INSPECTION

I, Thomas G Laps, holding a valid commission issued by The National Board of Boiler and Pressure Vessel Inspectors and certificate of competency issued by the jurisdiction of OHIO and employed by HSB CT. of Hartford, Conn. have inspected the repair, modification or replacement described in this report on April 21, 20 07 and state that to the best of my knowledge and belief, this repair, modification or replacement has been completed in accordance with Section XI of the ASME Code and the National Board Inspection Code "NR" rules.

By signing this certificate, neither the undersigned nor my employer makes any warranty, expressed or implied, concerning the work described in this report. Furthermore, neither the undersigned nor my employer shall be liable in any manner for any personal injury, property damage or loss of any kind arising from or connected with this inspection.

Date 4/21, 20 07 Signed Thomas G Laps (inspector) Commissions NB 9330 "N" "I" "A" Ohio Comm. (National Board (include endorsements), and jurisdiction, and no.)

1C41-037

NIS-2/NR-1 OWNER'S REPORT FOR REPAIRS OR REPLACEMENTS

As required by the Provisions of the ASME Code Section XI

PNPP No. 9308 Rev. 9/11/00 NOI-1741

1. Owner: FIRSTENERGY CORP. Date 5/1/07
   10 Center Road, Perry, Ohio 44081 Sheet 1 of 4

2. Plant: Perry Nuclear Power Plant (PNPP) Unit 1
   10 Center Road, Perry, Ohio 44081 200166846 (Repair Org. P.O. No., etc.)

3. Work Performed By: FIRSTENERGY Nuclear Operating Company PNPP Type Code Symbol Stamp NR
   10 Center Road, Perry, Ohio 44081 Authorization No. 33
   Expiration Date 9-28-08

4. Identification of System: 1C41 Standby Liquid Control

5. (a) Applicable Construction Code: ASME Section III NB (NAME/SECTION/DIVISION/CLASS), 1971 Edition

   Winter 19 72 Addenda Code Case(s) N/A

   (b) Construction Code used for repairs, modifications, or replacements: 1971 (Edition) Winter 72 (Addenda) N/A (Code Case(s))

   (c) ASME Code Section XI applicable for Inservice Inspection: 1989 (Edition) N/A (Addenda) N/A (Code Case(s))

   (d) Applicable Edition of Section XI Utilized for Repairs, Modification, or Replacements:

   19 89, N/A 19 N/A Addenda N/A (Code Case(s))

   (e) Design Responsibilities FIRSTENERGY Nuclear Oprerating Company PNPP

6. Identification of Components Repaired, Modified, or Replacement Components

Name of Component	Name of Manufacturer	Manufacturer Serial No.	Nat. Board No.	Other ID.	Year Built	Repair, Replacement, or Modification	ASME Code Stamped
Valve	Conax Corp.	N/A	113	N/A	1975	Replacement	Yes

7. Description of Work: Replaced primer/trigger assembly with Kit S/N 752EQ using trigger subassembly S/N 5541 and inlet fitting S/N 5516. The squib valve asset is 1C41-F004B.

8. Test Conducted: Hydrostatic- ☐ Pneumatic- ☐ Nominal Operating Pressure- ☐ Other- ☐

   Pressure N/A psi Test Temperature N/A degrees F Code Case(s) N/A

NIS-2/NR-1 OWNER'S REPORT FOR REPAIRS OR REPLACEMENTS (Back)

PNPP No. 9308 Rev. 9/11/00 NQI-1741

9. Remarks:

NO NAMEPLATE/STAMPING PERFORMED DUE TO THE INTERFACE CONTROLS OF RA-2370 BEING IN EFFECT AND JURISDICTIONAL AUTHORITY CONCURRENCE HAVING BEEN RECEIVED.

Note: Attach all applicable Manufacturer's Data Reports. Supplemental sheets such as lists, sketches, or drawings may be used, provided (1) size is 8 1/2 in. x 11 in., (2) information in items 1 through 6 of this report is included on each sheet, and (3) each sheet is numbered and the number of sheets is recorded on the front of this form.

CERTIFICATE OF COMPLIANCE

I, Michael J Tepsick, certify that to the best of my knowledge and belief the statements made in this report are correct and the repair, modification or replacement of the items described above conforms to Section XI of the ASME Code and to the National Board Inspection Code "NR" rules.

National Board Certificate of Authorization No. 33 to use the "NR stamp expires 28 Sept., 20 08

Date 1 May, 20 07 Signed FENOC-PNPP (name of repair organization) (authorized representative) QC Tech (title)

CERTIFICATE OF INSPECTION/INSERVICE INSPECTION

I, Thomas G Laps, holding a valid commission issued by The National Board of Boiler and Pressure Vessel Inspectors and certificate of competency issued by the jurisdiction of OHIO and employed by HSB CT of Hartford, CT have inspected the repair, modification or replacement described in this report on MAY 1, 20 07 and state that to the best of my knowledge and belief, this repair, modification or replacement has been completed in accordance with Section XI of the ASME Code and the National Board Inspection Code "NR" rules.

By signing this certificate, neither the undersigned nor my employer makes any warranty, expressed or implied, concerning the work described in this report. Furthermore, neither the undersigned nor my employer shall be liable in any manner for any personal injury, property damage or loss of any kind arising from or connected with this inspection.

Date 5/1, 20 07 Signed Thomas G Laps (inspector) Commissions NB 9330 "N" "I" "A" Ohio Comm. (National Board (include endorsements), and jurisdiction, and no.)

IC 41-037 SHEET 2 OF 4

FORM N-2 CERTIFICATE HOLDERS' DATA REPORT FOR IDENTICAL NUCLEAR PARTS AND APPURTENANCES*

As Required by the Provisions of the ASME Code, Section III

Not to Exceed One Day's Production

007

1. Manufactured and certified by IST Conax Nuclear, Inc. 402 Sonwil Drive, Cheektowaga, NY 14225 (name and address of NPT Certificate Holder)

2. Manufactured for GE Nuclear Energy Service (name and address of Purchaser)

3. Location of installation Unknown (name and address)

4. Type: N20000, Rev. G (drawing no.) SA479/304SST (mat'l spec. no.) 75 KSI N/A (tensile strength) N/A (CRN) 2006 (year built)

5. ASME Code, Section III, Division 1: 77 (edition) Summer 77 (addenda date) 1 (class) N/A (Code Case no.)

6. Fabricated in accordance with Const. Spec. (Div. 2 only) _____ (no.) Revision _____ Date _____

7. Remarks: Trigger Body Subassembly for explosive actuated valve replacememt kit for Standby Liquid Control System

Para. NB-2121 (b) is applicable to ram. Press fit/seal on .328 & .4375 diameters. Overall subassembly length is 2.5.

Pressure Test at 2800 psi for 10 minutes.

8. Nom. thickness (in.) See remarks Min. design thickness (in.) See remarks Dia. ID (ft & in.) See remarks Length overall (ft & in.) See remarks

9. When applicable, Certificate Holders' Data Reports are attached for each item of this report:

	Part or Appurtenance Serial Number	National Board No. in Numerical Order		Part or Appurtenance Serial Number	National Board No. in Numerical Order
(1)	7300	7300	(26)		
(2)	7301	7301	(27)		
(3)	7302	7302	(28)		
(4)	7303	7303	(29)		
(5)	7304	7304	(30)		
(6)	7305	7305	(31)		
(7)	7306	7306	(32)		
(8)	7307	7307	(33)		
(9)			(34)		
(10)			(35)		
(11)			(36)		
(12)			(37)		
(13)			(38)		
(14)			(39)		
(15)			(40)		
(16)			(41)		
(17)			(42)		
(18)			(43)		
(19)			(44)		
(20)			(45)		
(21)			(46)		
(22)			(47)		
(23)			(48)		
(24)			(49)		
(25)			(50)		

10. Design pressure 1500 psi. Temp. 150 °F. Hydro. test pressure * See Remarks at temp. °F (when applicable)

*Supplemental information in the form of lists, sketches, or drawings may be used provided (1) size is 8½ x 11, (2) information in items 2 and 3 on this Data Report is included on each sheet, (3) each sheet is numbered and the number of sheets is recorded at the top of this form.

A.S.M.E. 109137

Code Item

008

FORM N-2 (Back - Pg. 2 of 2)

Certificate Holder's Serial Nos. 7300 through 7307

CERTIFICATION OF DESIGN

Design specifications certified by George I. Skoda (when applicable) P.E. State CA Reg. no. 15847

Design report* certified by Francis J. Domino (when applicable) P.E. State NY Reg. no 36832

CERTIFICATE OF COMPLIANCE

We certify that the statements made in this report are correct and that this (these) Trigger Body Subassembly conforms to the rules of construction of the ASME Code, Section III, Division 1.

NPT Certificate of Authorization No. N-1850 Expires September 3, 2007

Date 6/2/2006 Name IST-Conax Nuclear (NPT Certificate Holder) Signed Paul Elowskas (authorized representative)

CERTIFICATE OF INSPECTION

I, the undersigned, holding a valid commission issued by the National Board of Boiler and Pressure Vessel Inspectors and the State or Province of New York and employed by HSB CT of Hartford, CT have inspected these items described in this Data Report on 02 Nov 06, and state that to the best of my knowledge and belief, the Certificate Holder has fabricated these parts or appurtenances in accordance with the ASME Code, Section III, Division 1. Each part listed has been authorized for stamping on the date shown above.

By signing this certificate, neither the inspector nor his employer makes any warranty, expressed or implied, concerning the equipment described in this Data Report. Furthermore, neither the inspector nor his employer shall be liable in any manner for any personal injury or property damage or loss of any kind arising from or connected with this inspection.

Date 06-02-06 Signed (Authorized Inspector) Commissions NB 10964AN NY 5057 (Nat'l Bd. (incl. endorsements) and state or prov. and no.)

05/01/2007 TUE 13:22 FAX PARKHOUSE

1C41-037 SHEET 3 OF 4

009

FORM N-2 CERTIFICATE HOLDERS' DATA REPORT FOR IDENTICAL NUCLEAR PARTS AND APPURTENANCES*

As Required by the Provisions of the ASME Code, Section III

Not to Exceed One Day's Production

1. Manufactured and certified by: IST Conax Nuclear, Inc. 402 Sonwil Drive, Cheektowaga, NY 14225 (name and address of NPT Certificate Holder)

2. Manufactured for: GE Nuclear Energy (name and address of Purchaser)

3. Location of installation: Unknown (name and address)

4. Type: N38017 Rev. F (drawing no.) | SA479/304SST (mat'l spec. no.) | 75 KSI N/A (tensile strength) | N/A (CRN) | 2005 (year built)

5. ASME Code, Section III, Division 1: 77 (edition) | Summer 77 (addenda date) | 1 (class) | N/A (Code Case no.)

6. Fabricated in accordance with Const. Spec. (Div. 2 only) _____ (no.) Revision _____ Date _____

7. Remarks: Inlet Fitting for explosive actuated valve replacement kit for Standby Liquid Control System

Pressure Test at 2800 psi for 10 minutes

8. Nom. thickness (in.) .040" Min. design thickness (in.) .031" Dia. ID (ft & in.) .815" Length overall (ft & in.) 2.245"

9. When applicable, Certificate Holders' Data Reports are attached for each item of this report:

	Part or Appurtenance Serial Number	National Board No. in Numerical Order		Part or Appurtenance Serial Number	National Board No. in Numerical Order
(1)	7230	7230	(26)		
(2)	7231	7231	(27)		
(3)	7232	7232	(28)		
(4)	7233	7233	(29)		
(5)	7234	7234	(30)		
(6)	7235	7235	(31)		
(7)	7236	7236	(32)		
(8)	7237	7237	(33)		
(9)	7238	7238	(34)		
(10)	7239	7239	(35)		
(11)	7240	7240	(36)		
(12)	7241	7241	(37)		
(13)	7242	7242	(38)		
(14)	7243	7243	(39)		
(15)	7244	7244	(40)		
(16)	7245	7245	(41)		
(17)	7246	7246	(42)		
(18)	7247	7247	(43)		
(19)	7248	7248	(44)		
(20)	7249	7249	(45)		
(21)	7250	7250	(46)		
(22)	7251	7251	(47)		
(23)	7252	7252	(48)		
(24)	7253	7253	(49)		
(25)	7254	7254	(50)		

GE NW 18

10. Design pressure 1500 psi. Temp. 150 °F. Hydro. test pressure * See Remarks at temp. °F (when applicable)

*Supplemental information in the form of lists, sketches, or drawings may be used provided (1) size is 8½ x 11, (2) information in items 2 and 3 on this Data Report is included on each sheet, (3) each sheet is numbered and the number of sheets is recorded at the top of this form.

A.S.M.E. 109137
Code Item

010

FORM N-2 (Back - Pg. 2 of 2)

Certificate Holder's Serial Nos. 7230 through 7254

CERTIFICATION OF DESIGN

Design specifications certified by George I. Skoda (when applicable) P.E. State CA Reg. no. 15847

Design report* certified by Francis J. Domino (when applicable) P.E. State NY Reg. no 36832

CERTIFICATE OF COMPLIANCE

We certify that the statements made in this report are correct and that this (these) Inlet Fittings conforms to the rules of construction of the ASME Code, Section III, Division 1.

NPT Certificate of Authorization No. N-1850 Expires September 3, 2007

Date 11/10/05 Name IST-Conax Nuclear (NPT Certificate Holder) Signed (authorized representative)

CERTIFICATE OF INSPECTION

I, the undersigned, holding a valid commission issued by the National Board of Boiler and Pressure Vessel Inspectors and the State or Province of New York and employed by HSB CT of Hartford, CT have inspected these items described in this Data Report on Nov 30, 2005, and state that to the best of my knowledge and belief, the Certificate Holder has fabricated these parts or appurtenances in accordance with the ASME Code, Section III, Division 1. Each part listed has been authorized for stamping on the date shown above.
By signing this certificate, neither the inspector nor his employer makes any warranty, expressed or implied, concerning the equipment described in this Data Report. Furthermore, neither the inspector nor his employer shall be liable in any manner for any personal injury or property damage or loss of any kind arising from or connected with this inspection.

Date 11-30-05 Signed (Authorized Inspector) Commissions NB 10964AN NY 5057 [Nat'l Bd. (incl. endorsements) and state or prov. and no.]

GE Hydro Corp

IST conax nuclear

1C41-037 SHEET 4 of 4

Tabulation
Of
Materials

012

VALVE REPLACEMENT KIT
P/N N27006-03

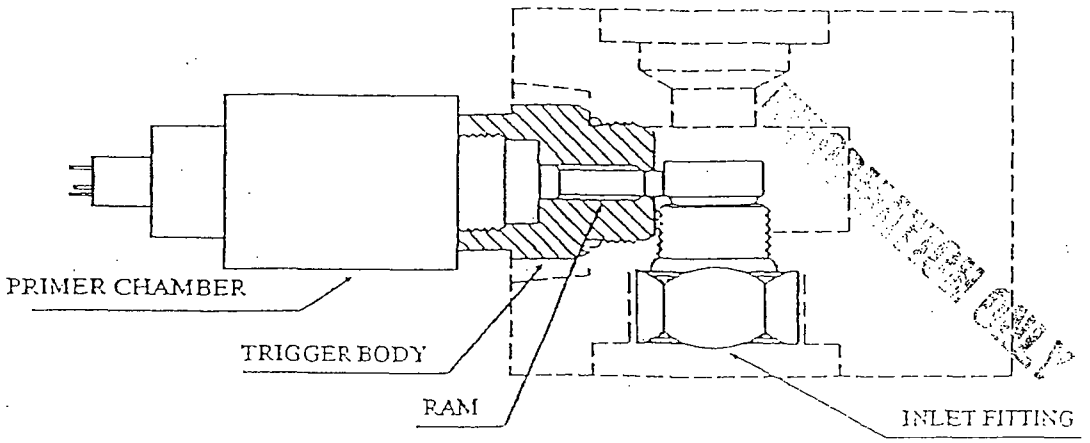

Trigger Body	Ram	Primer Chamber	Inlet Fitting
P/N: N38018-01	P/N: N-39012-01	P/N: N38062-01	P/N: N38017-01B
Vendor: Dubose Natl.	Vendor: Carpenter Tech	Vendor: Dubose Natl.	Vendor: Dubose Natl.
P.O.: P93-S-574N	P.O.: N91896	P.O.: P93-S-574N	P.O.: P93-S-377N
Heat No.: 151107	Heat No.: 53891	Heat No.: 151107	Heat No.: 12764
Control No.: 25075	Control No.: 24901	Control No.: 25020	Control No.: 24825
Trigger Subassembly N.B.S/N: 7300		SEP S/N: 1738	N.B. S/N: 7247

Customer: General Electric Nuclear Energy
Customer P.O.: 431002142
IST Conax S.O.: 7TZ800
Item No.: 008
MPL N0.: C41-F004
G.E. S/N: G.E.-752-EQ

IST Conax Nuclear Quality: David Pierce Date: 10/3/2006

A.S.M.E. 109137
Code Item

1C41-038 Pg 1 of 2

NIS-2/NR-1 OWNER'S REPORT FOR REPAIRS OR REPLACEMENTS

As required by the Provisions of the ASME Code Section XI

PNPP No. 9308 Rev. 9/11/00 NQI-1741

1. Owner: FIRSTENERGY CORP. Date 4-26-07
   10 Center Road, Perry, Ohio 44081 Sheet 1 of 2

2. Plant: Perry Nuclear Power Plant (PNPP) Unit 1
   10 Center Road, Perry, Ohio 44081 200174471
   (Repair Org. P.O. No., etc.)

3. Work Performed By: FIRSTENERGY Nuclear Operating Company PNPP Type Code Symbol Stamp NR
   10 Center Road, Perry, Ohio 44081 Authorization No. 33
   Expiration Date 9-28-08

4. Identification of System: Standby Liquid Control C41

5. (a) Applicable Construction Code: ASME Section III Class 2 NC ,1974 Edition
   NAME/SECTION/DIVISION/CLASS

   Winter 1975 Addenda Code Case(s) 1644-8, N-242, N-272, N-240, N413, 1644-3

   (b) Construction Code used for repairs, modifications, or replacements: 1974 (Edition) W75 (Addenda) N/A (Code Case(s))

   (c) ASME Code Section XI applicable for Inservice Inspection: 1989 (Edition) N/A (Addenda) N/A (Code Case(s))

   (d) Applicable Edition of Section XI Utilized for Repairs, Modification, or Replacements:

   1989 , N/A 19 N/A Addenda N/A (Code Case(s))

   (e) Design Responsibilities FENOC

6. Identification of Components Repaired, Modified, or Replacement Components

Name of Component	Name of Manufacturer	Manufacturer Serial No.	Nat. Board No.	Other ID.	Year Built	Repair, Replacement, or Modification	ASME Code Stamped
Piping System	Pullman Power	C41	108	1C41F0029B	1985	Replacement	Yes

7. Description of Work: Install replacement relief valve serial number 4. Serial number 6 was removed.

8. Test Conducted: Hydrostatic- ☐ Pneumatic- ☐ Nominal Operating Pressure- ☒ Other- ☐
   Pressure 1225 psi Test Temperature 83 degrees F Code Case(s) N/A

NIS-2/NR-1 OWNER'S REPORT FOR REPAIRS OR REPLACEMENTS (Back)

PNPP No. 9308 Rev 9/11/00 NQI-1741

9. Remarks: none

Note: Attach all applicable Manufacturer's Data Reports. Supplemental sheets such as lists, sketches, or drawings may be used, provided (1) size is 8 1/2 in. x 11 in., (2) information in items 1 through 6 of this report is included on each sheet, and (3) each sheet is numbered and the number of sheets is recorded on the front of this form.

CERTIFICATE OF COMPLIANCE

I, Russ Matthys, certify that to the best of my knowledge and belief the statements made in this report are correct and the repair, modification or replacement of the items described above conforms to Section XI of the ASME Code and to the National Board Inspection Code "NR" rules.

National Board Certificate of Authorization No. 33 to use the "NR stamp expires September, 28,2008

Date 4-26,2007 Signed FENOC-PNPP (name of repair organization) Russ Matthys (authorized representative) QC Supervisor (title)

CERTIFICATE OF INSPECTION/INSERVICE INSPECTION

I, THOMAS G. LAPS, holding a valid commission issued by The National Board of Boiler and Pressure Vessel Inspectors and certificate of competency issued by the jurisdiction of OHIO and employed by HSB CT of HARTFORD, CT. have inspected the repair, modification or replacement described in this report on April 27 20 07 and state that to the best of my knowledge and belief, this repair, modification or replacement has been completed in accordance with Section XI of the ASME Code and the National Board Inspection Code "NR" rules.

By signing this certificate, neither the undersigned nor my employer makes any warranty, expressed or implied, concerning the work described in this report. Furthermore, neither the undersigned nor my employer shall be liable in any manner for any personal injury, property damage or loss of any kind arising from or connected with this inspection.

Date 4/27, 20 07 Signed Thomas G. Laps (inspector) Commissions NB9330 NIA OHIO COMM. (National Board (include endorsements), and jurisdiction, and no.)

1C41-038 PG 2 OF 2

FORM NV-1 MANUFACTURERS' DATA REPORT FOR SAFETY AND SAFETY RELIEF VALVES*
(As Required by the Provisions of the ASME Code, Section III, Div. I)

1. Manufactured by TARGET ROCK CORP., 1966E. Broadhollow Rd., E.Farmingdale, NY
(Name and Address of Manufacturer)
2. Manufactured for Cleveland Electric Illuminating Co., Cleveland, Ohio
(Name and Address of Purchaser or Owner)
3. Location of Installation Perry Nuclear Power Plant, Perry, Ohio
(Name and Address)
4. --- (CRN) 1 1/2 x 2 REH-S-3 (Drawing No.) ----- (Nat'l. Brd. No.) 1982 (Year Built)
5. Valve 76H-012 (Model No., Series No.) Identifying Nos. 4 (Manufacturers' Serial No.)
Type Relief Valve
Safety, Safety Relief; Pilot; Power Actuated
Orifice Size .500 inch Nominal Inlet Size 1 1/2 inch Outlet Size 2" inch

6. Set Pressure (PSIG) 1275 Rated Temperature 120 °F
Stamped Capacity ----- lbs/hr @ ____ % Overpressure Blowdown (PSIG) -----
Sat. Steam
Hydrostatic Test (PSIG) Inlet 3250 Outlet 3250
(Applicable to valves for closed systems only)
7. Pressure Retaining Pieces

	Serial No. or Identification	Material Specification Incl. Type or Grade
Body	300424	ASME-SA479-316L
Bonnet or Yoke	300387	ASME-SA479-316
Support Rods	-----	-----
Nozzle	202075	ASME-SA479-316L
Disc	202989	ASME-SA564, GR.630
Spring Washers		
Adjusting Screw		
Spindle		
Spring		
Bolting	Nut Hex 3/8-16 UNC2B	ASME-SA194-2H
Other Pieces		
Flange	202074	ASME-SA479-316L
Screw Sock. Hd.	3/8-16 x 1 1/2	ASME-SA193-B7
Screw Sock. Hd.	102609	ASME-SA193-B7

GILBERT/COMMONWEALTH 4974 QC-QA

* Supplemental sheets in form of lists, sketches or drawings may be used provided (1) size is 8-1/2" × 11", (2) information in items 1-2 on this data report is included on each sheet; and (3) each sheet is numbered and number of sheets is recorded at top of this form.

(1/76) This form (E00042) may be obtained from the Order Dept., ASME, 345 E. 47 St., New York, N.Y. 10017

FORM NV-1 (Back)

CERTIFICATE OF COMPLIANCE

We certify that the statements made in this report are correct and that this valve conforms to the rules of construction of the ASME Code for Nuclear Power Plant Components, Section III, Div. 1., 1974 Edition, Addenda Sum. 1975 (Date)

Code Case No. ---.

Date 10/13/82 Signed Target Rock Corp. (Manufacturer) by P. Olsolen For G. Abruzzo, Mgr. Quality

Our ASME Certificate of Authorization No. 1949 to use the NV (NV) symbol expires 12/9/83 (Date)

CERTIFICATION OF DESIGN

Design information on file at Target Rock Corporation

Stress analysis report (Class 1 only) on file at ---

Design specifications certified by[1] Jan Paul Sockel

PE State Pa. Reg. No. 20130E

Stress report certified by[1] ---

PE State --- Reg. No. ---

[1] Signature not required—list name only.

CERTIFICATE OF SHOP INSPECTION

I, the undersigned, holding a valid commission issued by the National Board of Boiler and Pressure Vessel Inspectors and the State or Province of New York and employed by Commercial Union Ins. of Boston, Mass. have inspected the pump, or valve, described in this Data Report on 10/13, 19 82, and state that to the best of my knowledge and belief, the Manufacturer has constructed this pump, or valve, in accordance with the ASME Code for Nuclear Power Plant Components.

By signing this certificate, neither the Inspector nor his employer makes any warrant, expressed or implied, concerning the equipment described in this Data Report. Furthermore, neither the Inspector nor his employer shall be liable in any manner for any personal injury or property damage or a loss of any kind arising from or connected with this inspection.

Date 10/13 19 82 NEW YORK STATE COMMISSION NO. 2283

Signed William O. Roland (Inspector) Commissions ALSO COMMISSIONED IN Penn., Ohio & Conn. (Nat'l. Bd., State Prov. and No.)

GILBERT/COMMONWEALTH 4974 G/C-QA

1E12-293

PAGE 1 OF 2

NIS-2/NR-1 OWNER'S REPORT FOR REPAIRS OR REPLACEMENTS

As required by the Provisions of the ASME Code Section XI

PNPP No. 9308 Rev. 9/11/00 NQI-1741

1. Owner: FIRSTENERGY CORP. Date 11/10/06
10 Center Road, Perry, Ohio 44081 Sheet 1 of 2

2. Plant: Perry Nuclear Power Plant (PNPP) Unit 1
10 Center Road, Perry, Ohio 44081 200192906
(Repair Org. P.O. No., etc.)

3. Work Performed By: FIRSTENERGY Nuclear Operating Company PNPP Type Code Symbol Stamp NR
10 Center Road, Perry, Ohio 44081 Authorization No. 33
Expiration Date 9/28/08

4. Identification of System: RESIDUAL HEAT REMOVAL 1E12

5. (a) Applicable Construction Code: ASME Section III class 2 (NAME/SECTION/DIVISION/CLASS), 1974 Edition

Winter 19 76 Addenda Code Case(s) N/A

(b) Construction Code used for repairs, modifications, or replacements: 1974 (Edition) W76 (Addenda) N/A (Code Case(s))

(c) ASME Code Section XI applicable for Inservice Inspection: 1989 (Edition) N/A (Addenda) N/A (Code Case(s))

(d) Applicable Edition of Section XI Utilized for Repairs, Modification, or Replacements:

19 89 , N/A 19 N/A Addenda N/A (Code Case(s))

(e) Design Responsibilities FirstEnergy Corp

6. Identification of Components Repaired, Modified, or Replacement Components

Name of Component	Name of Manufacturer	Manufacturer Serial No.	Nat. Board No.	Other ID.	Year Built	Repair, Replacement, or Modification	ASME Code Stamped
Pump	Bingham Willamette	1A015	795	N/A	1980	Replacement	Yes

7. Description of Work: Removed rotating element S/N 1A015 and installed rotating element S/N 1A018 (including stuffing box and seal gland) Note the pump casing was not changed.Installed 1/2" plug HT XGB.

8. Test Conducted: Hydrostatic- ☐ Pneumatic- ☐ Nominal Operating Pressure- ☒ Other- ☐

Pressure 45 psi Test Temperature 78 degrees F Code Case(s) N/A

NIS-2/NR-1 OWNER'S REPORT FOR REPAIRS OR REPLACEMENTS (Back)

PNPP No. 9308 Rev. 9/11/00 NQI-1741

9. Remarks: ITEM IS 1E12C0003. MJT 7-9-07 TGL 7/9/07

NO NAMEPLATE/STAMPING PERFORMED DUE TO THE INTERFACE CONTROLS OF RA-2370 BEING IN EFFECT AND JURISDICTIONAL AUTHORITY CONCURRENCE HAVING BEEN RECEIVED.

Note: Attach all applicable Manufacturer's Data Reports. Supplemental sheets such as lists, sketches, or drawings may be used, provided (1) size is 8 1/2 in. x 11 in., (2) information in items 1 through 6 of this report is included on each sheet, and (3) each sheet is numbered and the number of sheets is recorded on the front of this form.

CERTIFICATE OF COMPLIANCE

I, Michael J Tepsick, certify that to the best of my knowledge and belief the statements made in this report are correct and the repair, modification or replacement of the items described above conforms to Section XI of the ASME Code and to the National Board Inspection Code "NR" rules.

National Board Certificate of Authorization No. 33 to use the "NR stamp expires 28 Sept., 20 08

Date 10 Nov., 20 06 Signed FENOC-PNPP (name of repair organization) (authorized representative) QC Tech. (title)

CERTIFICATE OF INSPECTION/INSERVICE INSPECTION

I, Thomas G Laps, holding a valid commission issued by The National Board of Boiler and Pressure Vessel Inspectors and certificate of competency issued by the jurisdiction of OHIO and employed by HSB CT. of Hartford, Conn. have inspected the repair, modification or replacement described in this report on Nov. 13 20 06 and state that to the best of my knowledge and belief, this repair, modification or replacement has been completed in accordance with Section XI of the ASME Code and the National Board Inspection Code "NR" rules.

By signing this certificate, neither the undersigned nor my employer makes any warranty, expressed or implied, concerning the work described in this report. Furthermore, neither the undersigned nor my employer shall be liable in any manner for any personal injury, property damage or loss of any kind arising from or connected with this inspection.

Date 11/13, 20 06 Signed (inspector) Commissions NB 9330 "N" "I" "A" Ohio Comm. (National Board (include endorsements), and jurisdiction, and no.)

1E12-293 PAGE 2 OF 2

FORM NPV-1 MANUFACTURERS' DATA REPORT FOR NUCLEAR PUMPS OR VALVES*
(As Required by the Provisions of the ASME Code, Section III, Div. 1)

1. Manufactured by Bingham-Willamette Co., 2800 NW Front Ave., Portland, Oregon 97210 (Name and Address of Manufacturer)
2. Manufactured for Gilbert-Commonwealth/Cleveland Electric Illuminating (Name and Address of Purchaser or Owner)
3. Location of Installation Perry Nuclear Power Plant Units 1 & 2 (Name and Address)
4. Pump or Valve Pump. Nominal Inlet Size 2 (inch) Outlet Size 2 (inch)

	(a) Model No., Series No. or Type	(b) Manufacturers' Serial No.	(c) Canadian Registration No.	(d) Drawing No.	(e) Class	(f) Nat'l. Bd. No.	(g) Year Built
(1)	CAP	TA018	NA	FD TA015/22	II	NB-798	1980
(2)							
(3)							
(4)							
(5)							
(6)							
(7)							
(8)							
(9)							
(10)							

5. Water Leg Pump (Brief description of service for which equipment was designed)

6. Design Conditions 150 (Pressure) psi 140 (Temperature) °F or Valve Pressure Class II (1)
7. Cold Working Pressure 150 psi at 100°F.
8. Pressure Retaining Pieces

Mark No.	Material Spec. No.	Manufacturer	Remarks
(a) Castings			
1147-77-4	SA-351 CF8	Quali-Cast	Case
1147-77-4	SA-351 CF8	Quali-Cast	Stuffing Box
1147-77-2	SA-351 CF8	Quali-Cast	Seal Gland
(b) Forgings			

S.O. 2A017
ITEM Code Data Report
PAGE 3

(1) For manually operated valves only.

* Supplemental sheets in form of lists, sketches or drawings may be used provided (1) size is 8-1/2" x 11", (2) information in items 1, 2 and 5 on this data report is included on each sheet, and (3) each sheet is numbered and number of sheets is recorded at top of this form.

(3/77) This form (E00037) may be obtained from the Order Dept., ASME, 345 E. 47 St., New York, N.Y. 10017

FORM NPV-1 (Back)

Mark No.	Material Spec. No.	Manufacturer	Remarks
(c) Bolting			
8784	SA-193 B7	Metrix	Stud, Case
8785	SA-194 2H	Metrix	Nut, Case
0124	SA-193 B8M	Metrix	Stud, Gland
8787	SA-194 B8M	Metrix	Nut, Gland
A	SA-449 Cl 2	Metrix	Capscrew, Bracket, Moto
A	SA-325 Tp 1	Metrix	Bolt, Pump
0610	SA-193 B7	Metrix	Taper Pin
P.O. 1-45565	SA-192 304	Familian	Plug, Drain
(d) Other Parts (Seal Circulation Piping)			
TH4051	SA-312 304	Tube Sales	Pipe
VTO	SA-182 304	Familian	Tee
VTO	SA-182 304	Familian	Elbow
VHV	SA-182 304	Familian	Plug
0637	SA-182 304	Metrix	Orifice
VDO, VFA, VKO	SA-182 304	Familian	Union

9. Hydrostatic test 225/900 psi

CERTIFICATE OF COMPLIANCE

We certify that the statements made in this report are correct and that this pump, or valve, conforms to the rules of construction of the ASME Code for Nuclear Power Plant Components, Section III, Div. I, Edition 1974, Addenda W75 (Date), Code Case No. NA, Date 6-22-80.

Signed Bingham-Willamette Company (Manufacturer) by [signature]

Our ASME Certificate of Authorization No. N-1654 to use the N (N1 NPV) symbol expires 2/28/83 (Date)

CERTIFICATION OF DESIGN

Design information on file at Bingham-Willamette Company

Stress analysis report (Class 1 only) on file at NA

Design specifications certified by (1) Hiram R. Reppert

PE State Penn Reg. No. 24928E

Stress analysis certified by (1) Paul Oliver - Van Gulik Assoc.

PE State Oregon Reg. No. 6261

(1) Signature not required. List name only.

CERTIFICATE OF SHOP INSPECTION

I, the undersigned, holding a valid commission issued by the National Board of Boiler and Pressure Vessel Inspectors and the State or Province of Oregon and employed by Department of Commerce have inspected the pump, or valve, described in this Data Report on 6-23 1980, and state that to the best of my knowledge and belief, the Manufacturer has constructed this pump, or valve, in accordance with the ASME Code, Section III.

By signing this certificate, neither the Inspector nor his employer makes any warranty, expressed or implied, concerning the equipment described in this Data Report. Furthermore, neither the Inspector nor his employer shall be liable in any manner for any personal injury or property damage or a loss of any kind arising from or connected with this inspection.

Date 6-23 1980

[signature] (Inspector) Commissions NB 3037 Or 556 (Nat'l Bd., State, Prov. and No.)

1E12 - 294

NIS-2/NR-1 OWNER'S REPORT FOR REPAIRS OR REPLACEMENTS

As required by the Provisions of the ASME Code Section XI

PNPP No. 9308 Rev. 9/11/00 NQI-1741

1. Owner: FIRSTENERGY CORP. Date 4/6/07
   10 Center Road, Perry, Ohio 44081 Sheet 1 of 1

2. Plant: Perry Nuclear Power Plant (PNPP) Unit 1
   10 Center Road, Perry, Ohio 44081 200187255
   (Repair Org. P.O. No., etc.)

3. Work Performed By: FIRSTENERGY Nuclear Operating Company PNPP Type Code Symbol Stamp NR
   10 Center Road, Perry, Ohio 44081 Authorization No. 33
   Expiration Date 9/28/08

4. Identification of System: RESIDUAL HEAT REMOVAL 1E12

5. (a) Applicable Construction Code: ASME SECTION III CLASS 2 (NAME/SECTION/DIVISION/CLASS), 1974 Edition

   WINTER 19 75 Addenda Code Case(s) *N224,N242,N272,N275,N282,N413,1728, 1644-5

   (b) Construction Code used for repairs, modifications, or replacements: 1971 (Edition) W75 (Addenda) * (Code Case(s))

   (c) ASME Code Section XI applicable for Inservice Inspection: 1989 (Edition) NONE (Addenda) N/A (Code Case(s))

   (d) Applicable Edition of Section XI Utilized for Repairs, Modification, or Replacements:

   19 89 , _____ 19 N/A Addenda N/A (Code Case(s))

   (e) Design Responsibilities First Energy Corp

6. Identification of Components Repaired, Modified, or Replacement Components

Name of Component	Name of Manufacturer	Manufacturer Serial No.	Nat. Board No.	Other ID.	Year Built	Repair, Replacement, or Modification	ASME Code Stamped
PIPING SYSTEM	PULLMAN POWER	1E12	83	1E12H06 66	1985	REPLACEMENT	YES

7. Description of Work: INSTALLED NEW LOAD STUD HEAT CODE MSS.

8. Test Conducted: Hydrostatic- ☐ Pneumatic- ☐ Nominal Operating Pressure- ☐ Other- ☐
   Pressure N/A psi Test Temperature N/A degrees F Code Case(s) N/A

NIS-2/NR-1 OWNER'S REPORT FOR REPAIRS OR REPLACEMENTS (Back)

PNPP No. 9308 Rev. 9/11/00 NQI-1741

9. Remarks:

NO NAMEPLATE/STAMPING PERFORMED DUE TO THE INTERFACE CONTROLS OF RA-2370 BEING IN EFFECT AND JURISDICTIONAL AUTHORITY CONCURRENCE HAVING BEEN RECEIVED.

Note: Attach all applicable Manufacturer's Data Reports. Supplemental sheets such as lists, sketches, or drawings may be used, provided (1) size is 8 1/2 in. x 11 in., (2) information in items 1 through 6 of this report is included on each sheet, and (3) each sheet is numbered and the number of sheets is recorded on the front of this form.

CERTIFICATE OF COMPLIANCE

I, Michael J Tepsick, certify that to the best of my knowledge and belief the statements made in this report are correct and the repair, modification or replacement of the items described above conforms to Section XI of the ASME Code and to the National Board Inspection Code "NR" rules.

National Board Certificate of Authorization No. 33 to use the "NR stamp expires 28 Sept., 20 08

Date 6 APRIL., 20 07 Signed FENOC-PNPP (name of repair organization) Michael J Tepsick (authorized representative) QC Tech. (title)

CERTIFICATE OF INSPECTION/INSERVICE INSPECTION

I, Thomas G Laps, holding a valid commission issued by The National Board of Boiler and Pressure Vessel Inspectors and certificate of competency issued by the jurisdiction of OHIO and employed by HSB CT. of Hartford, Conn. have inspected the repair, modification or replacement described in this report on April 6 20 07 and state that to the best of my knowledge and belief, this repair, modification or replacement has been completed in accordance with Section XI of the ASME Code and the National Board Inspection Code "NR" rules.

By signing this certificate, neither the undersigned nor my employer makes any warranty, expressed or implied, concerning the work described in this report. Furthermore, neither the undersigned nor my employer shall be liable in any manner for any personal injury, property damage or loss of any kind arising from or connected with this inspection.

Date 4/6, 20 07 Signed Thomas G Laps (inspector) Commissions NB 9330 "N" "I" "A" Ohio Comm. (National Board (include endorsements), and jurisdiction, and no.)

1E12-295

NIS-2/NR-1 OWNER'S REPORT FOR REPAIRS OR REPLACEMENTS

As required by the Provisions of the ASME Code Section XI

PNPP No. 9308 Rev. 9/11/00 NQI-1741

1. Owner: FIRSTENERGY CORP. Date 4/7/07
   10 Center Road, Perry, Ohio 44081 Sheet 1 of 1

2. Plant: Perry Nuclear Power Plant (PNPP) Unit 1
   10 Center Road, Perry, Ohio 44081 200175667 (Repair Org. P.O. No., etc.)

3. Work Performed By: FIRSTENERGY Nuclear Operating Company PNPP Type Code Symbol Stamp NR
   10 Center Road, Perry, Ohio 44081 Authorization No. 33
   Expiration Date 9/28/08

4. Identification of System: RESIDUAL HEAT REMOVAL 1E12

5. (a) Applicable Construction Code: ASME SECTION III CLASS 2 (NAME/SECTION/DIVISION/CLASS), 1974 Edition

   WINTER 19 75 Addenda Code Case(s) *N224,N242,N272,N275,N282,N413,1728, 1644-5

   (b) Construction Code used for repairs, modifications, or replacements: 1971 (Edition) W75 (Addenda) * (Code Case(s))

   (c) ASME Code Section XI applicable for Inservice Inspection: 1989 (Edition) NONE (Addenda) N/A (Code Case(s))

   (d) Applicable Edition of Section XI Utilized for Repairs, Modification, or Replacements:

   19 89 , 19 N/A Addenda N/A (Code Case(s))

   (e) Design Responsibilities First Energy Corp

6. Identification of Components Repaired, Modified, or Replacement Components

Name of Component	Name of Manufacturer	Manufacturer Serial No.	Nat. Board No.	Other ID.	Year Built	Repair, Replacement, or Modification	ASME Code Stamped
PIPING SYSTEM	PULLMAN POWER	1E12	83	1E12H50 02	1985	REPLACEMENT	YES

7. Description of Work: INSTALLED NEW PSA-10 snubber S/N 42858.

8. Test Conducted: Hydrostatic- ☐ Pneumatic- ☐ Nominal Operating Pressure- ☐ Other- ☐

   Pressure N/A psi Test Temperature N/A degrees F Code Case(s) N/A

NIS-2/NR-1 OWNER'S REPORT FOR REPAIRS OR REPLACEMENTS (Back)

PNPP No. 9308 Rev. 9/11/00 NQI-1741

9. Remarks:

NO NAMEPLATE/STAMPING PERFORMED DUE TO THE INTERFACE CONTROLS OF RA-2370 BEING IN EFFECT AND JURISDICTIONAL AUTHORITY CONCURRENCE HAVING BEEN RECEIVED.

Note: Attach all applicable Manufacturer's Data Reports. Supplemental sheets such as lists, sketches, or drawings may be used, provided (1) size is 8 1/2 in. x 11 in., (2) information in items 1 through 6 of this report is included on each sheet, and (3) each sheet is numbered and the number of sheets is recorded on the front of this form.

CERTIFICATE OF COMPLIANCE

I, Michael J Tepsick, certify that to the best of my knowledge and belief the statements made in this report are correct and the repair, modification or replacement of the items described above conforms to Section XI of the ASME Code and to the National Board Inspection Code "NR" rules.

National Board Certificate of Authorization No. 33 to use the "NR stamp expires 28 Sept., 20 08

Date 7 APRIL, 20 07 Signed FENOC-PNPP (name of repair organization) Michael J Tepsick (authorized representative) QC Tech. (title)

CERTIFICATE OF INSPECTION/INSERVICE INSPECTION

I, Thomas G Laps, holding a valid commission issued by The National Board of Boiler and Pressure Vessel Inspectors and certificate of competency issued by the jurisdiction of OHIO and employed by HSB CT. of Hartford, Conn. have inspected the repair, modification or replacement described in this report on April 9, 2007 and state that to the best of my knowledge and belief, this repair, modification or replacement has been completed in accordance with Section XI of the ASME Code and the National Board Inspection Code "NR" rules.

By signing this certificate, neither the undersigned nor my employer makes any warranty, expressed or implied, concerning the work described in this report. Furthermore, neither the undersigned nor my employer shall be liable in any manner for any personal injury, property damage or loss of any kind arising from or connected with this inspection.

Date 4/9, 2007 Signed Thomas G Laps (inspector) Commissions NB 9330 "N" "I" "A" Ohio Comm. (National Board (include endorsements), and jurisdiction, and no.)

1E12-296 Pg 1 of 2

NIS-2/NR-1 OWNER'S REPORT FOR REPAIRS OR REPLACEMENTS

As required by the Provisions of the ASME Code Section XI

PNPP No. 9308 Rev. 9/11/00 NQI-1741

1. Owner: FIRSTENERGY CORP. Date 4-26-07
10 Center Road, Perry, Ohio 44081 Sheet 1 of 2

2. Plant: Perry Nuclear Power Plant (PNPP) Unit 1
10 Center Road, Perry, Ohio 44081 200175647
(Repair Org. P.O. No., etc.)

3. Work Performed By: FIRSTENERGY Nuclear Operating Company PNPP Type Code Symbol Stamp NR
10 Center Road, Perry, Ohio 44081 Authorization No. 33
Expiration Date 9-28-08

4. Identification of System: 1E12 Residual Heat Removal

5. (a) Applicable Construction Code: ASME Section III - Cls NF ,1974 Edition
NAME/SECTION/DIVISION/CLASS

Winter 1975 Addenda Code Case(s) N-38, N-71-6, N-71-9, N-224-1, N-225, N-249, N-272, N-413, 1728

(b) Construction Code used for repairs, modifications, or replacements: 1974 (Edition) W75 (Addenda) NA (Code Case(s))

(c) ASME Code Section XI applicable for Inservice Inspection: 1989 (Edition) NA (Addenda) NA (Code Case(s))

(d) Applicable Edition of Section XI Utilized for Repairs, Modification, or Replacements:

1989 , NA 19 NA Addenda NA (Code Case(s))

(e) Design Responsibilities FENOC

6. Identification of Components Repaired, Modified, or Replacement Components

Name of Component	Name of Manufacturer	Manufacturer Serial No.	Nat. Board No.	Other ID.	Year Built	Repair, Replacement, or Modification	ASME Code Stamped
Piping System	Johnson Controls	1E12	010	1H22H02 09 (see remarks)	1985	Replacement	Yes

7. Description of Work: Replace PSA ¼ mechanical snubber serial number (existing 34309) with new snubber serial number 28142

8. Test Conducted: Hydrostatic- ☐ Pneumatic- ☐ Nominal Operating Pressure- ☐ Other- ☐

Pressure N/A psi Test Temperature N/A degrees F Code Case(s) N/A

NIS-2/NR-1 OWNER'S REPORT FOR REPAIRS OR REPLACEMENTS (Back)

PNPP No. 9308 Rev. 9/11/00 NQI-1741

9. Remarks: Functional location number 1H22H0209 was originally installed as Johnson Controls hanger number 1H22-P0004-H1043 as identified on isometric 814-0608-00906. Ref: JCI final N-5 data report 1E12-0066-F

Note: Attach all applicable Manufacturer's Data Reports. Supplemental sheets such as lists, sketches, or drawings may be used, provided (1) size is 8 1/2 in. x 11 in., (2) information in items 1 through 6 of this report is included on each sheet, and (3) each sheet is numbered and the number of sheets is recorded on the front of this form.

CERTIFICATE OF COMPLIANCE

I, Russ Matthys, certify that to the best of my knowledge and belief the statements made in this report are correct and the repair, modification or replacement of the items described above conforms to Section XI of the ASME Code and to the National Board Inspection Code "NR" rules.

National Board Certificate of Authorization No. 33 to use the "NR stamp expires September 28, 2008

Date 4-26,2007 Signed FENOC-PNPP (name of repair organization) Russ Matthys (authorized representative) QC Supervisor (title)

CERTIFICATE OF INSPECTION/INSERVICE INSPECTION

I, THOMAS G. LAPS, holding a valid commission issued by The National Board of Boiler and Pressure Vessel Inspectors and certificate of competency issued by the jurisdiction of OHIO and employed by HSB CT. of HARTFORD, CT. have inspected the repair, modification or replacement described in this report on April 26 20 07 and state that to the best of my knowledge and belief, this repair, modification or replacement has been completed in accordance with Section XI of the ASME Code and the National Board Inspection Code "NR" rules.

By signing this certificate, neither the undersigned nor my employer makes any warranty, expressed or implied, concerning the work described in this report. Furthermore, neither the undersigned nor my employer shall be liable in any manner for any personal injury, property damage or loss of any kind arising from or connected with this inspection.

Date 4/26, 2007 Signed Thomas G. Laps (inspector) Commissions NB 9330 "N" "I" "A" OHIO COMM (National Board (include endorsements), and jurisdiction, and no.)

1E12-256 Pg 2 of 2

As Required by the Provisions of the ASME Code Rules, Section III, Division 1

Kin-Tech Division

1. Manufactured by Pacific Scientific 1346 S. State College Blvd. Anaheim, CA 92803
(Name and address of NPT Certificate Holder)

2. Manufactured for Power Piping Co. 829 Beaver Ave. Pittsburgh, PA 15233
(Name and address of purchaser or owner)

3. Location of Installation Unknown

4. Identification

	(a) Component Support I.D. No.	(b) Canadian Registration No.	(c) Applicable Drawings with Last Rev. & Date	(d) Stress Report or Load Capacity Data Sheet	(e) Type of Component Support	(f) Class	(g) Nat'l Board No.	(h) Year Built
(1)	28130	NONE	1801104-05-J	DR 1348 Rev.B	Linear	1	NONE	1982
(2)	thru							
(3)	28199							
(4)								
(5)								
(6)								
(7)								
(8)								
(9)								
(10)								

5. Remarks

SEP 9 1982
QA Approved
TPH

CERTIFICATE OF COMPLIANCE

I certify that the statements made in this report are correct and that these components/supports conform to the rules of construction of the ASME Code for Nuclear Power Plant Components, Section III, Division 1, Edition 1974 Addenda Winter '75 (Date)

Code Case No. 1644-6

Date 9-1-82 Signed Pacific Scientific (NPT Certificate Holder) by Rosalie A. Nave

Our ASME Certificate of Authorization No. 1198 to use the "NPT" (NPT)

Symbol expires Aug. 4, 1984 (Date)

CERTIFICATION OF DESIGN

Design Information on File at Pacific Scientific

Stress Report or Load Capacity Data Sheets on File at Pacific Scientific

Filed Per NCA 3256

MAR 1 1983

Design Specifications Certified by (1) Leo E. Ay PE State California

Reg. No. 13533

Stress Analysis Report or Load Capacity Data Sheets Certified by (1) Leo E. Ay

PE State California Reg. No. 13533

(1) Last name only, signature not required.

DOCUMENT REVIEWED BY 4993 PNPP GAI/QA

Supplemental sheets in form of lists, sketches or drawings may be used provided (1) size is 8½ x 11 in., (2) information in items 1, 2, 3 and 4 on this Data Report is included on each sheet, and (3) each sheet is numbered and number of sheets is recorded at top of this form.

(10/77) This form (E00075) may be obtained from the Order Dept., ASME, 345 E. 47th St., New York, N.Y. 10017

CERTIFICATE OF SHOP INSPECTION

I, the undersigned, holding a valid commission issued by the National Board of Boiler and Pressure Vessel Inspectors and the State or Province of Pennsylvania and employed by HSB I&I Co. of Hartford, CT have inspected the component supports described in this Data Report on SEP. 1 1982 and state that to the best of my knowledge and belief the NPT Certificate Holder has constructed these component supports in accordance with the ASME Code for Nuclear Power Plant Components.

By signing this certificate, neither the Inspector nor his employer makes any warranty, expressed or implied, concerning the component supports described in this Data Report. Furthermore, neither the Inspector nor his employer shall be liable in any manner for any personal injury or property damage or a loss of any kind arising from or connected with this inspection.

Date SEP. 1 1982

Signed Eugene H. Regali Commissions CA-1513 / PA-HC-2781
(Nat'l Bd., State, Prov., and No.)

CERTIFICATION OF FIELD INSPECTION

I, the undersigned, holding a valid commission issued by the National Board of Boiler and Pressure Vessel Inspectors and the State or Province of _____ and employed by _____ of _____ have compared the statements in this Data Report with the described component supports and state that the parts referred to as data items _____, not included in the certificate of shop inspection, have been inspected by me and that to the best of my knowledge and belief the NPT Certificate Holder has constructed these component supports in accordance with the ASME Code for Nuclear Power Plant Components.

By signing this certificate neither the Inspector nor his employer makes any warranty, expressed or implied, concerning the component supports described in this Data Report. Furthermore, neither the inspector nor his employer shall be liable in any manner for any personal injury or property damage or a loss of any kind arising from or connected with this inspection.

Date _____

Signed _____ Commissions _____
(Nat'l Bd., State, Prov., and No.)

MAR 1 1983

DOCUMENT REVIEWED BY 4993 PNPP GAI/QA

SEP 9 1982 QA APPROVED TPH

1E12-297 Pg 1 of 2

NIS-2/NR-1 OWNER'S REPORT FOR REPAIRS OR REPLACEMENTS

As required by the Provisions of the ASME Code Section XI

PNPP No. 9308 Rev. 9/11/00 NQI-1741

1. Owner: FIRSTENERGY CORP. Date 4-28-07
   10 Center Road, Perry, Ohio 44081 Sheet 1 of 2

2. Plant: Perry Nuclear Power Plant (PNPP) Unit 1
   10 Center Road, Perry, Ohio 44081 200168098 (Repair Org. P.O. No., etc.)

3. Work Performed By: FIRSTENERGY Nuclear Operating Company PNPP Type Code Symbol Stamp NR
   10 Center Road, Perry, Ohio 44081 Authorization No. 33
   Expiration Date 9-28-08

4. Identification of System: 1E12 RESIDUAL HEAT REMOVAL

5. (a) Applicable Construction Code: ASME Section III -Class 2 NC (NAME/SECTION/DIVISION/CLASS) ,1974 Edition

   Winter 1975 Addenda Code Case(s) 1644-5, 1728, N-224, N-272, N-275, N-282, N-413,N-242

   (b) Construction Code used for repairs, modifications, or replacements: 1974 (Edition) W/75 (Addenda) N/A (Code Case(s))

   (c) ASME Code Section XI applicable for Inservice Inspection: 1989 (Edition) N/A (Addenda) N/A (Code Case(s))

   (d) Applicable Edition of Section XI Utilized for Repairs, Modification, or Replacements:

   1989 , N/A 19 N/A Addenda N/A (Code Case(s))

   (e) Design Responsibilities FENOC

6. Identification of Components Repaired, Modified, or Replacement Components

Name of Component	Name of Manufacturer	Manufacturer Serial No.	Nat. Board No.	Other ID.	Year Built	Repair, Replacement, or Modification	ASME Code Stamped
PIPING SYSTEM	PULLMAN POWER	E12	83	1E12F0063C	1985	REPLACEMENT	YES

7. Description of Work: Replace check SN 1-51906-A with SN 1-52969-B

8. Test Conducted: Hydrostatic- ☐ Pneumatic- ☐ Nominal Operating Pressure- ☒ Other- ☐
   Pressure 125 psi Test Temperature N/A degrees F Code Case(s) N/A

NIS-2/NR-1 OWNER'S REPORT FOR REPAIRS OR REPLACEMENTS (Back)

PNPP No 9308 Rev. 9/11/00 NQI-1741

9. Remarks: NONE

NO NAMEPLATE/STAMPING PERFORMED DUE TO THE INTERFACE CONTROLS OF RA-2370 BEING IN EFFECT AND JURISDICTIONAL AUTHORITY CONCURRENCE HAVING BEEN RECEIVED.

Note: Attach all applicable Manufacturer's Data Reports. Supplemental sheets such as lists, sketches, or drawings may be used, provided (1) size is 8 1/2 in. x 11 in., (2) information in items 1 through 6 of this report is included on each sheet, and (3) each sheet is numbered and the number of sheets is recorded on the front of this form.

CERTIFICATE OF COMPLIANCE

I, Russ Matthys, certify that to the best of my knowledge and belief the statements made in this report are correct and the repair, modification or replacement of the items described above conforms to Section XI of the ASME Code and to the National Board Inspection Code "NR" rules.

National Board Certificate of Authorization No. 33 to use the "NR stamp expires 28 SEPT , 2008

Date 4-28-2007 Signed FENOC-PNPP (name of repair organization) _____ (authorized representative) _____ (title)

CERTIFICATE OF INSPECTION/INSERVICE INSPECTION

I, Thomas G. Laps, holding a valid commission issued by The National Board of Boiler and Pressure Vessel Inspectors and certificate of competency issued by the jurisdiction of OHIO and employed by HARTFORD STEAM BOILER CT. of HARTFORD, CT have inspected the repair, modification or replacement described in this report on April 28 20 07 and state that to the best of my knowledge and belief, this repair, modification or replacement has been completed in accordance with Section XI of the ASME Code and the National Board Inspection Code "NR" rules.

By signing this certificate, neither the undersigned nor my employer makes any warranty, expressed or implied, concerning the work described in this report. Furthermore, neither the undersigned nor my employer shall be liable in any manner for any personal injury, property damage or loss of any kind arising from or connected with this inspection.

Date 4/28, 20 07 Signed Thomas G. Laps (inspector) Commissions NB 9330 "N"A"A" Ohio Comm (National Board (include endorsements), and jurisdiction, and no.)

1E12-297 Pg 2 of 2

FORM NPV-1 CERTIFICATE HOLDERS DATA REPORT FOR NUCLEAR PUMPS OR VALVES*
As Required by the Provisions of the ASME Code, Section III, Division 1

1. Manufactured and certified by: Weir Valves and Controls USA Inc., 285 Canal St., Salem, MA 01970
(name and address of N Certificate Holder)

2. Manufactured for First Energy Corporation, 10 Center Rd., P.O. Box 97, North Perry, OH 44081
(name and address of Purchaser)

3. Location of installation Perry Nuclear Power Plant, 10 Center Road, Dock No. 1, North Perry OH 44081
(name and address)

4. Model No., Series No., or Type Dual Plate Check Valve Drawing 50079-A Rev. 06 CRN N/A

5. ASME Code, Section III, Division 1: 1974 (edition) Winter 1975 (addenda date) 2 (class) N/A (Code Case no.)

6. Pump or Valve Valve Nominal inlet size 8 (in.) Outlet size 8 (in.)

7. Material: Body SA216-WCB Bonnet N/A Disk SA487-CA6NM Bolting N/A

(a) Cert. Holder's Serial No.	(b) Nat'l Board No.	(c) Body Serial No.	(d) Bonnet Serial No.	(e) Disk Serial No.
1-52969-B	N/A	HT. #:87633 RT#: 75249	N/A	HT. #: 87506 RT#: 75238 & 75240

* Supplemental information in form of lists, sketches, or drawings may be used provided (1) size 8 ½ x 11, (2) information in items 1 through 4 on this Data Report is included on each sheet, (3) each sheet is numbered and the number of sheets is recorded at the top of this form

(12/88) This form (E00037) may be obtained from the Order Dept., ASME, 22 Law Drive, Box 2300, Fairfield, NJ 07007-2300.

Certificate Holder' s Serial No. 1-52969-B

8. Design conditions 740 psi 100 °F or valve pressure class 300 (1)
(pressure) (temperature)

9. Cold working pressure 740 psi at 100°F

10. Hydrostatic test 1125 psi. Disk differential test pressure 825 psi

11. Remarks: Pin Retainers SA 479-410 HT# : 504420 TR# 151D

CERTIFICATION OF DESIGN

Design specification certified by Hiram R. Reppert P.E. State PA Reg. no. 24928-E
(when applicable)

Design report certified by N/A P.E. State N/A Reg. no. N/A
(when applicable)

CERTIFICATE OF COMPLIANCE

We certify that the statements made in this report are correct and that pump or valve conforms to the rules for construction of the ASME Code, Section III, Division 1.

N Certificate of Authorization No. N-2606 Expires 6-13-07

Date 9/29/06 Name WEIR VALVES & CONTROLS USA INC.. Signed
(N Certificate Holder) (authorized representative)

CERTIFICATE OF INSPECTION

I, the undersigned, holding a valid commission issued by the National Board of Boiler and Pressure Vessel Inspectors and the State or Province of Massachusetts and employed by HSBCT of Hartford, CT have inspected the pump, or valve, described in this Data Report on 9/29/06, and state that to the best of my knowledge and belief, the Certificate Holder has constructed this pump, or valve, in accordance with the ASME Code, Section III, Division 1.

By signing this Certificate, neither the inspector nor his employer makes any warranty, expressed or implied, concerning the equipment described in this Data Report. Furthermore, neither the inspector nor his employer shall be liable in any manner for any personal injury or property damage or loss of any kind arising from or connected with this inspection.

Date 9/29/06 Signed Commission MA 1657 A, B, N, I
(Authorized Inspector) (Nat'l. Bd. (incl. endorsements) and state or prov. and no.)

(1) For manually operated valves only.

1E12-298 Pg 1 of 2

NIS-2/NR-1 OWNER'S REPORT FOR REPAIRS OR REPLACEMENTS

As required by the Provisions of the ASME Code Section XI

PNPP No. 9308 Rev. 9/11/00 NQI-1741

1. Owner: FIRSTENERGY CORP. Date 5-2-07
   10 Center Road, Perry, Ohio 44081 Sheet 1 of 2

2. Plant: Perry Nuclear Power Plant (PNPP) Unit 1
   10 Center Road, Perry, Ohio 44081 200148638 (Repair Org. P.O. No., etc.)

3. Work Performed By: FIRSTENERGY Nuclear Operating Company PNPP Type Code Symbol Stamp NR
   10 Center Road, Perry, Ohio 44081 Authorization No. 33
   Expiration Date 9-28-08

4. Identification of System: 1E12 RESIDUAL HEAT REMOVAL

5. (a) Applicable Construction Code: ASME Section III -Class 2 NC (NAME/SECTION/DIVISION/CLASS), 1974 Edition

   Winter 1975 Addenda Code Case(s) 1644-5, 1728, N-224, N-272, N-275, N-282, N-413,N-242

   (b) Construction Code used for repairs, modifications, or replacements: 1974 (Edition) W/75 (Addenda) N/A (Code Case(s))

   (c) ASME Code Section XI applicable for Inservice Inspection: 1989 (Edition) N/A (Addenda) N/A (Code Case(s))

   (d) Applicable Edition of Section XI Utilized for Repairs, Modification, or Replacements:

   19 89 , N/A 19 N/A Addenda N/A (Code Case(s))

   (e) Design Responsibilities FENOC

6. Identification of Components Repaired, Modified, or Replacement Components

Name of Component	Name of Manufacturer	Manufacturer Serial No.	Nat. Board No.	Other ID.	Year Built	Repair, Replacement, or Modification	ASME Code Stamped
PIPING SYSTEM	PULLMAN POWER	E12	83	1E12 F086	1985	REPLACEMENT	YES

7. Description of Work: Replace check SN 1-52154-A with SN 1-52969A

8. Test Conducted: Hydrostatic- ☐ Pneumatic- ☐ Nominal Operating Pressure- ☒ Other- ☐
   Pressure 145 psi Test Temperature 71 degrees F Code Case(s) N/A

NIS-2/NR-1 OWNER'S REPORT FOR REPAIRS OR REPLACEMENTS (Back)

PNPP No. 9308 Rev. 9/11/00 NQI-1741

9. Remarks: NONE

NO NAMEPLATE/STAMPING PERFORMED DUE TO THE INTERFACE CONTROLS OF RA-2370 BEING IN EFFECT AND JURISDICTIONAL AUTHORITY CONCURRENCE HAVING BEEN RECEIVED.

Note: Attach all applicable Manufacturer's Data Reports. Supplemental sheets such as lists, sketches, or drawings may be used, provided (1) size is 8 1/2 in. x 11 in., (2) information in items 1 through 6 of this report is included on each sheet, and (3) each sheet is numbered and the number of sheets is recorded on the front of this form.

CERTIFICATE OF COMPLIANCE

I, Russ Matthys, certify that to the best of my knowledge and belief the statements made in this report are correct and the repair, modification or replacement of the items described above conforms to Section XI of the ASME Code and to the National Board Inspection Code "NR" rules.

National Board Certificate of Authorization No. 33 to use the "NR stamp expires 28 SEPT , 2008

Date 5-2-2007 Signed FENOC-PNPP (name of repair organization) Russ Matthys (authorized representative) QC Supervisor (title)

CERTIFICATE OF INSPECTION/INSERVICE INSPECTION

I, Thomas G. Laps, holding a valid commission issued by The National Board of Boiler and Pressure Vessel Inspectors and certificate of competency issued by the jurisdiction of OHIO and employed by HARTFORD STEAM BOILER CT. of HARTFORD, CT have inspected the repair, modification or replacement described in this report on MAY 2, 20 07 and state that to the best of my knowledge and belief, this repair, modification or replacement has been completed in accordance with Section XI of the ASME Code and the National Board Inspection Code "NR" rules.

By signing this certificate, neither the undersigned nor my employer makes any warranty, expressed or implied, concerning the work described in this report. Furthermore, neither the undersigned nor my employer shall be liable in any manner for any personal injury, property damage or loss of any kind arising from or connected with this inspection.

Date 5/2, 20 07 Signed Thomas G Laps (inspector) Commissions NB 9330 "N"I"A" Ohio Comm (National Board (include endorsements), and jurisdiction, and no.)

1E12-298 Pg 2 of 2

FORM NPV-1 CERTIFICATE HOLDERS DATA REPORT FOR NUCLEAR PUMPS OR VALVES*
As Required by the Provisions of the ASME Code, Section III, Division 1

1. Manufactured and certified by: Weir Valves and Controls USA Inc., 285 Canal St., Salem, MA 01970
(name and address of N Certificate Holder)

2. Manufactured for First Energy Corporation, 10 Center Rd., P.O. Box 97, North Perry, OH 44081
(name and address of Purchaser)

3. Location of installation Perry Nuclear Power Plant, 10 Center Road, Dock No. 1, North Perry OH 44081
(name and address)

4. Model No., Series No., or Type Dual Plate Check Valve Drawing 11949-01 Rev. 04 CRN N/A

5. ASME Code, Section III, Division 1: 1974 (edition) Winter 1975 (addenda date) 2 (class) N/A (Code Case no.)

6. Pump or Valve Valve Nominal inlet size 6 (in.) Outlet size 6 (in.)

7. Material: Body SA216-WCB Bonnet N/A Disk SA487-CA6NM Bolting N/A

(a) Cert. Holder's Serial No.	(b) Nat'l Board No.	(c) Body Serial No.	(d) Bonnet Serial No.	(e) Disk Serial No.
1-52969-A	N/A	HT. #:87643 RT#: 75242	N/A	HT. #:87506 RT#: 75217 & 75218

* Supplemental information in form of lists, sketches, or drawings may be used provided (1) size 8 ½ x 11, (2) information in items 1 through 4 on this Data Report is included on each sheet, (3) each sheet is numbered and the number of sheets is recorded at the top of this form

(12/88) This form (E00037) may be obtained from the Order Dept., ASME, 22 Law Drive, Box 2300, Fairfield, NJ 07007-2300.

Certificate Holder' s Serial No. 1-52969-A

8. Design conditions 740 (pressure) psi 100 (temperature) °F or valve pressure class 300 (1)

9. Cold working pressure 740 psi at 100°F

10. Hydrostatic test 1125 psi. Disk differential test pressure 825 psi

11. Remarks: Pin Retainers SA 479-410 HT# : 504420 TR# 151D

CERTIFICATION OF DESIGN

Design specification certified by Hiram R. Reppert (when applicable) P.E. State PA Reg no. 24928-E

Design report certified by N/A (when applicable) P.E. State N/A Reg. no. N/A

CERTIFICATE OF COMPLIANCE

We certify that the statements made in this report are correct and that pump or valve conforms to the rules for construction of the ASME Code, Section III, Division 1.

N Certificate of Authorization No. N-2606 Expires 6-13-07

Date 9/29/06 Name WEIR VALVES & CONTROLS USA INC. Signed

(N Certificate Holder) (authorized representative)

CERTIFICATE OF INSPECTION

I, the undersigned, holding a valid commission issued by the National Board of Boiler and Pressure Vessel Inspectors and the State or Province of Massachusetts and employed by HSBCT of Hartford, CT have inspected the pump, or valve, described in this Data Report on 9/29/06, and state that to the best of my knowledge and belief, the Certificate Holder has constructed this pump, or valve, in accordance with the ASME Code, Section III, Division 1.

By signing this Certificate, neither the inspector nor his employer makes any warranty, expressed or implied, concerning the equipment described in this Data Report. Furthermore, neither the inspector nor his employer shall be liable in any manner for any personal injury or property damage or loss of any kind arising from or connected with this inspection.

Date 9/29/06 Signed

Commission MA1651 A, B, N, I

(Authorized Inspector) (Nat'l. Bd. (incl. endorsements) and state or prov. and no.)

(1) For manually operated valves only.

1E12-299 Pg 1 of 2

NIS-2/NR-1 OWNER'S REPORT FOR REPAIRS OR REPLACEMENTS

As required by the Provisions of the ASME Code Section XI

PNPP No. 9308 Rev. 9/11/00 NQI-1741

1. Owner: FIRSTENERGY CORP. Date 5-2-07
10 Center Road, Perry, Ohio 44081 Sheet 1 of 2

2. Plant: Perry Nuclear Power Plant (PNPP) Unit 1
10 Center Road, Perry, Ohio 44081 200168096
(Repair Org. P.O. No., etc.)

3. Work Performed By: FIRSTENERGY Nuclear Operating Company PNPP Type Code Symbol Stamp NR
10 Center Road, Perry, Ohio 44081 Authorization No. 33
Expiration Date 9-28-08

4. Identification of System: 1E12 RESIDUAL HEAT REMOVAL

5. (a) Applicable Construction Code: ASME Section III -Class 2 NC ,1974 Edition
NAME/SECTION/DIVISION/CLASS

Winter 1975 Addenda Code Case(s) 1644-5, 1728, N-224, N-272, N-275, N-282, N-413,N-242

(b) Construction Code used for repairs, modifications, or replacements: 1974 (Edition) W/75 (Addenda) N/A (Code Case(s))

(c) ASME Code Section XI applicable for Inservice Inspection: 1989 (Edition) N/A (Addenda) N/A (Code Case(s))

(d) Applicable Edition of Section XI Utilized for Repairs, Modification, or Replacements:

19 89 , N/A 19 N/A Addenda N/A (Code Case(s))

(e) Design Responsibilities FENOC

6. Identification of Components Repaired, Modified, or Replacement Components

Name of Component	Name of Manufacturer	Manufacturer Serial No.	Nat. Board No.	Other ID.	Year Built	Repair, Replacement, or Modification	ASME Code Stamped
PIPING SYSTEM	PULLMAN POWER	E12	83	1E12 F063A	1985	REPLACEMENT	YES

7. Description of Work: Replace check SN 3-51001-A with SN 1-52183-A

8. Test Conducted: Hydrostatic- ☐ Pneumatic- ☐ Nominal Operating Pressure- ☒ Other- ☐

Pressure 150 psi Test Temperature NOT degrees F Code Case(s) N/A

NIS-2/NR-1 OWNER'S REPORT FOR REPAIRS OR REPLACEMENTS (Back)

PNPP No. 9308 Rev. 9/11/00 NQI-1741

9. Remarks: NONE

NO NAMEPLATE/STAMPING PERFORMED DUE TO THE INTERFACE CONTROLS OF RA-2370 BEING IN EFFECT AND JURISDICTIONAL AUTHORITY CONCURRENCE HAVING BEEN RECEIVED.

Note: Attach all applicable Manufacturer's Data Reports. Supplemental sheets such as lists, sketches, or drawings may be used, provided (1) size is 8 1/2 in. x 11 in., (2) information in items 1 through 6 of this report is included on each sheet, and (3) each sheet is numbered and the number of sheets is recorded on the front of this form.

CERTIFICATE OF COMPLIANCE

I, Russ Matthys, certify that to the best of my knowledge and belief the statements made in this report are correct and the repair, modification or replacement of the items described above conforms to Section XI of the ASME Code and to the National Board Inspection Code "NR" rules.

National Board Certificate of Authorization No. 33 to use the "NR stamp expires 28 SEPT , 2008

Date 5-2-2007 Signed FENOC-PNPP (name of repair organization) Russ Matthys (authorized representative) QC Supervisor (title)

CERTIFICATE OF INSPECTION/INSERVICE INSPECTION

I, Thomas G. Laps holding a valid commission issued by The National Board of Boiler and Pressure Vessel Inspectors and certificate of competency issued by the jurisdiction of OHIO and employed by HARTFORD STEAM BOILER CT. of HARTFORD, CT have inspected the repair, modification or replacement described in this report on MAY 2, 20 07 and state that to the best of my knowledge and belief, this repair, modification or replacement has been completed in accordance with Section XI of the ASME Code and the National Board Inspection Code "NR" rules.

By signing this certificate, neither the undersigned nor my employer makes any warranty, expressed or implied, concerning the work described in this report. Furthermore, neither the undersigned nor my employer shall be liable in any manner for any personal injury, property damage or loss of any kind arising from or connected with this inspection.

Date 5/2, 20 07 Signed Thomas G Laps (inspector) Commissions NB 9330 "N"I"A" Ohio Comm (National Board (include endorsements), and jurisdiction, and no.)

1E12-299 Pg 2 of 2

FORM NPV-1 CERTIFICATE HOLDERS DATA REPORT FOR NUCLEAR PUMPS OR VALVES*
As Required by the Provisions of the ASME Code, Section III, Division 1

Pg. 1 of 2

1. Manufactured and certified by: Weir Valves and Controls USA Inc., 285 Canal St., Salem, MA 01970
(name and address of N Certificate Holder)

2. Manufactured for First Energy Corporation, 10 Center Rd., P.O. Box 97, North Perry, OH 44081
(name and address of Purchaser)

3. Location of installation Perry Nuclear Power Plant, 10 Center Road, Dock No. 1, North Perry OH 44081
(name and address)

4. Model No., Series No., or Type Dual Plate Check Valve Drawing 50079-A Rev. 05 CRN N/A

5. ASME Code, Section III, Division 1: 1974 (edition) Winter 1975 (addenda date) 2 (class) N/A (Code Case no.)

6. Pump or Valve Valve Nominal inlet size 8 (in.) Outlet size 8 (in.)

7. Material: Body SA216-WCB Bonnet N/A Disk SA487-CA6NM Bolting N/A

(a) Cert. Holder's Serial No.	(b) Nat'l Board No.	(c) Body Serial No	(d) Bonnet Serial No.	(e) Disk Serial No.
1-52183-A	N/A	HT. #.04200	N/A	HT. #:04204
		S/N: V614		S/N:V615 & V616

* Supplemental information in form of lists, sketches, or drawings may be used provided (1) size 8 ½ x 11, (2) information in items 1 through 4 on this Data Report is included on each sheet, (3) each sheet is numbered and the number of sheets is recorded at the top of this form

(12/88) This form (E00037) may be obtained from the Order Dept., ASME, 22 Law Drive, Box 2300, Fairfield, NJ 07007-2300.

FORM NPV-1 (Back – Pg. 2 of 2)

Certificate Holder's Serial No. 1-52183-A

8. Design conditions 500 psi 480 °F or valve pressure class 300 (1)
(pressure) (temperature)

9. Cold working pressure 740 psi at 100°F

10. Hydrostatic test 1125 psi. Disk differential test pressure 825 psi

11. Remarks: Pin Retainers SA 479-410 HT# : G7190 TR# 127D

CERTIFICATION OF DESIGN

Design specification certified by Hiram R. Reppert P.E. State PA Reg. no. 24928-E
(when applicable)

Design report certified by N/A P.E. State N/A Reg. no. N/A
(when applicable)

CERTIFICATE OF COMPLIANCE

We certify that the statements made in this report are correct and that pump or valve conforms to the rules for construction of the ASME Code, Section III, Division 1.

N Certificate of Authorization No N-2606 Expires 6-13-07

Date 9/27/04 Name WEIR VALVES & CONTROLS USA INC. Signed
(N Certificate Holder) (authorized representative)

CERTIFICATE OF INSPECTION

I, the undersigned, holding a valid commission issued by the National Board of Boiler and Pressure Vessel Inspectors and the State or Province of Massachusetts and employed by HSBCT of Hartford, CT have inspected the pump, or valve, described in this Data Report on 9/27/04, and state that to the best of my knowledge and belief, the Certificate Holder has constructed this pump, or valve, in accordance with the ASME Code, Section III, Division 1.

By signing this Certificate, neither the inspector nor his employer makes any warranty, expressed or implied, concerning the equipment described in this Data Report. Furthermore, neither the inspector nor his employer shall be liable in any manner for any personal injury or property damage or loss of any kind arising from or connected with this inspection.

Date 9/27/04 Signed Curt Hanson Commission MA 1651 A, N, I
(Authorized Inspector) (Nat'l. Bd (incl. endorsements) and state or prov. and no)

(1) For manually operated valves only.

1E12-300 Pg 1 of 2

NIS-2/NR-1 OWNER'S REPORT FOR REPAIRS OR REPLACEMENTS

As required by the Provisions of the ASME Code Section XI

PNPP No. 9308 Rev. 9/11/00 NQI-1741

1. Owner: FIRSTENERGY CORP. Date 5-2-07
   10 Center Road, Perry, Ohio 44081 Sheet 1 of 2

2. Plant: Perry Nuclear Power Plant (PNPP) Unit 1
   10 Center Road, Perry, Ohio 44081 200168097
   (Repair Org. P.O. No., etc.)

3. Work Performed By: FIRSTENERGY Nuclear Operating Company PNPP Type Code Symbol Stamp NR
   10 Center Road, Perry, Ohio 44081 Authorization No. 33
   Expiration Date 9-28-08

4. Identification of System: 1E12 RESIDUAL HEAT REMOVAL

5. (a) Applicable Construction Code: ASME Section III -Class 2 NC ,1974 Edition
   NAME/SECTION/DIVISION/CLASS

   Winter1975 Addenda Code Case(s) 1644-5, 1728, N-224, N-272, N-275, N-282, N-413,N-242

   (b) Construction Code used for repairs, modifications, or replacements: 1974 (Edition) W/75 (Addenda) N/A (Code Case(s))

   (c) ASME Code Section XI applicable for Inservice Inspection: 1989 (Edition) N/A (Addenda) N/A (Code Case(s))

   (d) Applicable Edition of Section XI Utilized for Repairs, Modification, or Replacements:

   19 89 , N/A 19 N/A Addenda N/A (Code Case(s))

   (e) Design Responsibilities FENOC

6. Identification of Components Repaired, Modified, or Replacement Components

Name of Component	Name of Manufacturer	Manufacturer Serial No.	Nat. Board No.	Other ID.	Year Built	Repair, Replacement, or Modification	ASME Code Stamped
PIPING SYSTEM	PULLMAN POWER	E12	83	1E12 F063B	1985	REPLACEMENT	YES

7. Description of Work: Replace check valve SN SN 2-51906-A with 2-52969- B

8. Test Conducted: Hydrostatic- ☐ Pneumatic- ☐ Nominal Operating Pressure- ☒ Other- ☐
   Pressure 150 psi Test Temperature NOT degrees F Code Case(s) N/A

NIS-2/NR-1 OWNER'S REPORT FOR REPAIRS OR REPLACEMENTS (Back)

PNPP No. 9308 Rev. 9/11/00 NQI-1741

9. Remarks: NONE

NO NAMEPLATE/STAMPING PERFORMED DUE TO THE INTERFACE CONTROLS OF RA-2370 BEING IN EFFECT AND JURISDICTIONAL AUTHORITY CONCURRENCE HAVING BEEN RECEIVED.

Note: Attach all applicable Manufacturer's Data Reports. Supplemental sheets such as lists, sketches, or drawings may be used, provided (1) size is 8 1/2 in. x 11 in., (2) information in items 1 through 6 of this report is included on each sheet, and (3) each sheet is numbered and the number of sheets is recorded on the front of this form.

CERTIFICATE OF COMPLIANCE

I, Russ Matthys, *certify that to the best of my knowledge and belief the statements made in this report are* correct and the repair, modification or replacement of the items described above conforms to Section XI of the ASME Code and to the National Board Inspection Code "NR" rules.

National Board Certificate of Authorization No. 33 to use the "NR stamp expires 28 SEPT , 2008

Date 5-2-2007 Signed FENOC-PNPP *(name of repair organization)* Russ Matthys *(authorized representative)* QC Supervisor *(title)*

CERTIFICATE OF INSPECTION/INSERVICE INSPECTION

I, Thomas G. Laps, holding a valid commission issued by The National Board of Boiler and Pressure Vessel Inspectors and certificate of competency issued by the jurisdiction of OHIO *and employed by* HARTFORD STEAM BOILER CT. of HARTFORD, CT have inspected the repair, modification or replacement described in this report on May 2, 20 07 and state that to the best of my knowledge and belief, this repair, modification or replacement has been completed in accordance with *Section XI of the ASME Code and the National Board Inspection Code "NR" rules.*

By signing this certificate, neither the undersigned nor my employer makes any warranty, expressed or implied, concerning the work described in this report. Furthermore, neither the undersigned nor my employer shall be liable in any manner for any personal injury, property damage or loss of any kind arising from or connected with this inspection.

Date 5/2, 20 07 Signed Thomas G Laps *(inspector)* Commissions NB 9330 "N"I"A" Ohio Comm *(National Board (include endorsements), and jurisdiction, and no.)*

1E12-300 Pg 2 of 2

FORM NPV-1 CERTIFICATE HOLDERS DATA REPORT FOR NUCLEAR PUMPS OR VALVES*
As Required by the Provisions of the ASME Code, Section III, Division 1

1. Manufactured and certified by: Weir Valves and Controls USA Inc., 285 Canal St., Salem, MA 01970
(name and address of N Certificate Holder)

2. Manufactured for First Energy Corporation, 10 Center Rd., P.O. Box 97, North Perry, OH 44081
(name and address of Purchaser)

3. Location of installation Perry Nuclear Power Plant, 10 Center Road, Dock No. 1, North Perry OH 44081
(name and address)

4. Model No., Series No., or Type Dual Plate Check Valve Drawing 50079-A Rev. 06 CRN N/A

5. ASME Code, Section III, Division 1: 1974 (edition) Winter 1975 (addenda date) 2 (class) N/A (Code Case no.)

6. Pump or Valve Valve Nominal inlet size 8 (in.) Outlet size 8 (in.)

7. Material: Body SA216-WCB Bonnet N/A Disk SA487-CA6NM Bolting N/A

(a) Cert. Holder's Serial No.	(b) Nat'l Board No.	(c) Body Serial No.	(d) Bonnet Serial No.	(e) Disk Serial No.
2-52969-B	N/A	HT. #:87633 RT#: 75248	N/A	HT. #: 87506 RT#: 75239 & 75241

* Supplemental information in form of lists, sketches, or drawings may be used provided (1) size 8 ½ x 11, (2) information in items 1 through 4 on this Data Report is included on each sheet, (3) each sheet is numbered and the number of sheets is recorded at the top of this form

(12/88) This form (E00037) may be obtained from the Order Dept., ASME, 22 Law Drive, Box 2300, Fairfield, NJ 07007-2300.

Certificate Holder' s Serial No. 2-52969-B

8. Design conditions 740 psi 100 °F or valve pressure class 300 (1)
(pressure) (temperature)

9. Cold working pressure 740 psi at 100°F

10. Hydrostatic test 1125 psi. Disk differential test pressure 825 psi

11. Remarks: Pin Retainers SA 479-410 HT# : 504420 TR# 151D

CERTIFICATION OF DESIGN

Design specification certified by Hiram R. Reppert P.E. State PA Reg. no. 24928-E
(when applicable)

Design report certified by N/A P.E. State N/A Reg. no. N/A
(when applicable)

CERTIFICATE OF COMPLIANCE

We certify that the statements made in this report are correct and that pump or valve conforms to the rules for construction of the ASME Code, Section III, Division 1.

N Certificate of Authorization No. N-2606 Expires 6-13-07

Date 9/29/06 Name WEIR VALVES & CONTROLS USA INC. Signed
(N Certificate Holder) (Authorized representative)

CERTIFICATE OF INSPECTION

I, the undersigned, holding a valid commission issued by the National Board of Boiler and Pressure Vessel Inspectors and the State or Province of Massachusetts and employed by HSBCT of Hartford, CT have inspected the pump, or valve, described in this Data Report on 9/29/06, and state that to the best of my knowledge and belief, the Certificate Holder has constructed this pump, or valve, in accordance with the ASME Code, Section III, Division 1.

By signing this Certificate, neither the inspector nor his employer makes any warranty, expressed or implied, concerning the equipment described in this Data Report. Furthermore, neither the inspector nor his employer shall be liable in any manner for any personal injury or property damage or loss of any kind arising from or connected with this inspection.

Date 9/29/06 Signed Commission MA1651 A, B, N, I
(Authorized Inspector) (Nat'l. Bd. (incl. endorsements) and state or prov. and no.)

(1) For manually operated valves only.

1E12-301 Pg 1 of 2

NIS-2/NR-1 OWNER'S REPORT FOR REPAIRS OR REPLACEMENTS

As required by the Provisions of the ASME Code Section XI

PNPP No. 9308 Rev. 9/11/00 NQI-1741

1. Owner: FIRSTENERGY CORP. Date 5-5-07
   10 Center Road, Perry, Ohio 44081 Sheet 1 of 2

2. Plant: Perry Nuclear Power Plant (PNPP) Unit 1
   10 Center Road, Perry, Ohio 44081 200157306 (Repair Org. P.O. No., etc.)

3. Work Performed By: FIRSTENERGY Nuclear Operating Company PNPP Type Code Symbol Stamp NR
   10 Center Road, Perry, Ohio 44081 Authorization No. 33
   Expiration Date 9-28-08

4. Identification of System: 1E12 RESIDUAL HEAT REMOVAL

5. (a) Applicable Construction Code: ASME Section III -Class 1 NB (NAME/SECTION/DIVISION/CLASS), 1974 Edition
   Winter 1975 Addenda Code Case(s) 1644-5, 1728, N-224, N-272, N-275, N-282, N-413,N-242

   (b) Construction Code used for repairs, modifications, or replacements: 1974 (Edition) W/75 (Addenda) N/A (Code Case(s))

   (c) ASME Code Section XI applicable for Inservice Inspection: 1989 (Edition) N/A (Addenda) N/A (Code Case(s))

   (d) Applicable Edition of Section XI Utilized for Repairs, Modification, or Replacements:
   19 89 , N/A 19 N/A Addenda N/A (Code Case(s))

   (e) Design Responsibilities FENOC

6. Identification of Components Repaired, Modified, or Replacement Components

Name of Component	Name of Manufacturer	Manufacturer Serial No.	Nat. Board No.	Other ID.	Year Built	Repair, Replacement, or Modification	ASME Code Stamped
PIPING SYSTEM	PULLMAN POWER	E12	83	1E12 F041A	1985	REPLACEMENT	YES

7. Description of Work: Reworked valve and replace disk - SN 87709-3

8. Test Conducted: Hydrostatic- ☐ Pneumatic- ☐ Nominal Operating Pressure- ☒ Other- ☐
   Pressure NOP psi Test Temperature NOT degrees F Code Case(s) N/A

NIS-2/NR-1 OWNER'S REPORT FOR REPAIRS OR REPLACEMENTS (Back)

PNPP No. 9308 Rev. 9/11/00 NQI-1741

9. Remarks: NONE

NO NAMEPLATE/STAMPING PERFORMED DUE TO THE INTERFACE CONTROLS OF RA-2370 BEING IN EFFECT AND JURISDICTIONAL AUTHORITY CONCURRENCE HAVING BEEN RECEIVED.

Note: Attach all applicable Manufacturer's Data Reports. Supplemental sheets such as lists, sketches, or drawings may be used, provided (1) size is 8 1/2 in. x 11 in., (2) information in items 1 through 6 of this report is included on each sheet, and (3) each sheet is numbered and the number of sheets is recorded on the front of this form.

CERTIFICATE OF COMPLIANCE

I, Russ Matthys, certify that to the best of my knowledge and belief the statements made in this report are correct and the repair, modification or replacement of the items described above conforms to Section XI of the ASME Code and to the National Board Inspection Code "NR" rules.

National Board Certificate of Authorization No. 33 to use the "NR stamp expires 28 SEPT , 2008

Date 5-5-2007 Signed FENOC-PNPP (name of repair organization) Russ Matthys (authorized representative) QC Supervisor (title)

CERTIFICATE OF INSPECTION/INSERVICE INSPECTION

I, THOMAS G. LAPS holding a valid commission issued by The National Board of Boiler and Pressure Vessel Inspectors and certificate of competency issued by the jurisdiction of OHIO and employed by HARTFORD STEAM BOILER CT. of HARTFORD, CT have inspected the repair, modification or replacement described in this report on MAY 14, 20 07 and state that to the best of my knowledge and belief, this repair, modification or replacement has been completed in accordance with Section XI of the ASME Code and the National Board Inspection Code "NR" rules.

By signing this certificate, neither the undersigned nor my employer makes any warranty, expressed or implied, concerning the work described in this report. Furthermore, neither the undersigned nor my employer shall be liable in any manner for any personal injury, property damage or loss of any kind arising from or connected with this inspection.

Date 5/14, 20 07 Signed Thomas G Laps (inspector) Commissions NB 9330 N I A OHIO (National Board (include endorsements), and jurisdiction, and no.)

1 E12-301 Pg 2 of 2

FORM N-2 CERTIFICATE HOLDERS' DATA REPORT FOR IDENTICAL NUCLEAR PARTS AND APPURTENANCES*

As Required by the Provisions of the ASME Code, Section III
Not to Exceed One Day's Production

1. Manufactured and certified by Flowserve Corporation, 1900 S. Saunders St., Raleigh, NC 27603
(name and address of NPT Certificate Holder)
2. Manufactured for First Energy Corporation, P. O. Box 6100, Johnstown, PA 15907
(name and address of purchaser)
3. Location of installation First Energy Corp., Perry Nuclear Plant, 10 Center Rd., Perry, OH 44081
(name and address)
4. Type D82-24401-18, R/J (drawing no.) SA105 (mat'l. spec. no.) N/A (tensile strength) N/A (CRN) 2006 (year built)
5. ASME Code, Section III, Division 1: 1974 (edition) Winter 1975 (addenda date) 1 (class) N/A (Code Case no.)
6. Fabricated in accordance with Const. Spec. (Div. 2 only) N/A (no.) Revision N/A Date N/A
7. Remarks: Disk for 12" 4094(WCC)JNQTY Valve

S. O. 37287

8. Nom. thickness (in.) N/A Min. design thickness (in.) Per #4 Dia. ID (ft & in.) N/A Length overall (ft & in.) N/A
9. When applicable, Certificate Holders' Data Reports are attached for each item of this report:

Part or Appurtenance Serial Number	National Board No. in Numerical Order
(1) 87709-1	N/A
(2) 87709-2	N/A
(3) 87709-3	N/A
(4) 87709-4	N/A
(5) 87709-5	N/A
(6)	
(7)	
(8)	
(9)	
(10)	
(11)	
(12)	
(13)	
(14)	
(15)	
(16)	
(17)	
(18)	
(19)	
(20)	
(21)	
(22)	
(23)	
(24)	
(25)	

Part or Appurtenance Serial Number	National Board No. in Numerical Order
(26)	
(27)	
(28)	
(29)	
(30)	
(31)	
(32)	
(33)	
(34)	
(35)	
(36)	
(37)	
(38)	
(39)	
(40)	
(41)	
(42)	
(43)	
(44)	
(45)	
(46)	
(47)	
(48)	
(49)	
(50)	

10. Design pressure 1421 psi. Temp. 573 °F. Hydro. test pressure N/A (when applicable) at temp. °F

* Supplemental information in the form of lists, sketches, or drawings may be used provided (1) size is 8½ x 11, (2) information in items 2 and 3 on this Data Report is included on each sheet, (3) each sheet is numbered and the number of sheets is recorded at the top of this form.

(7/98) This form (E00040) may be obtained from the Order Dept. ASME

FORM N-2 (Back — Pg 2 of 2)

Certificate Holder's Serial Nos. 87709-1 through 87709-5

CERTIFICATION OF DESIGN

Design specifications certified by _____ (when applicable) P.E. State _____ Reg. no. _____

Design report* certified by _____ (when applicable) P.E. State _____ Reg. no. _____

CERTIFICATE OF COMPLIANCE

We certify that the statements made in this report are correct and that this (these) Part(s) conforms to the rules of construction of the ASME Code, Section III, Division 1.

NPT Certificate of Authorization No. N-1563 Expires November 26, 2006

Date 2/28/06 Name Flowserve Corporation (NPT Certificate Holder) Signed [signature] (authorized representative)

CERTIFICATE OF INSPECTION

I, the undersigned, holding a valid commission issued by the National Board of Boiler and Pressure Vessel Inspectors and the State or Province of NC and employed by HSB CT of Hartford, CT have inspected these items described in this Data Report on 2/28/06, and state that to the best of my knowledge and belief, the Certificate Holder has fabricated these parts or appurtenances in accordance with the ASME Code, Section III, Division 1. Each part listed has been authorized for stamping on the date shown above.

By signing this certificate, neither the inspector nor his employer makes any warranty, expressed or implied, concerning the equipment described in this Data Report. Furthermore, neither the inspector nor his employer shall be liable in any manner for any personal injury or property damage or loss of any kind arising from or connected with this inspection.

Date 2/28/06 Signed [signature] (Authorized Nuclear Inspector) Commissions NC #1421 (Nat'l. Bd. (incl. endorsements) and state or prov. and no.)

1E12-302

NIS-2/NR-1 OWNER'S REPORT FOR REPAIRS OR REPLACEMENTS

As required by the Provisions of the ASME Code Section XI

PNPP No. 9308 Rev. 9/11/00 NQI-1741

1. Owner: FIRSTENERGY CORP. Date 5-10-07
   10 Center Road, Perry, Ohio 44081 Sheet 1 of 1

2. Plant: Perry Nuclear Power Plant (PNPP) Unit 1
   10 Center Road, Perry, Ohio 44081 200153520 (Repair Org. P.O. No., etc.)

3. Work Performed By: FIRSTENERGY Nuclear Operating Company PNPP Type Code Symbol Stamp NR
   10 Center Road, Perry, Ohio 44081 Authorization No. 33
   Expiration Date 9-28-08

4. Identification of System: 1E12 RESIDUAL HEAT REMOVAL

5. (a) Applicable Construction Code: ASME Section III -Class 2 NC (NAME/SECTION/DIVISION/CLASS), 1974 Edition

   Winter 1975 Addenda Code Case(s) 1644-5, 1728, N-224, N-272, N-275, N-282, N-413, N-242

   (b) Construction Code used for repairs, modifications, or replacements: 1974 (Edition) W/75 (Addenda) N/A (Code Case(s))

   (c) ASME Code Section XI applicable for Inservice Inspection: 1989 (Edition) N/A (Addenda) N/A (Code Case(s))

   (d) Applicable Edition of Section XI Utilized for Repairs, Modification, or Replacements:

   19 89, N/A 19 N/A Addenda N/A (Code Case(s))

   (e) Design Responsibilities FENOC

6. Identification of Components Repaired, Modified, or Replacement Components

Name of Component	Name of Manufacturer	Manufacturer Serial No.	Nat. Board No.	Other ID.	Year Built	Repair, Replacement, or Modification	ASME Code Stamped
PIPING SYSTEM	PULLMAN POWER	E12	83	1E12F0018B	1985	REPLACEMENT	YES

7. Description of Work: Replace pipe and tee as a result of flow accelerated corrosion (new pipe HT S20419 New tee HT M377J)

8. Test Conducted: Hydrostatic- ☐ Pneumatic- ☐ Nominal Operating Pressure- ☒ Other- ☐
   Pressure 315 psi Test Temperature 79 degrees F Code Case(s) N416-2

NIS-2/NR-1 OWNER'S REPORT FOR REPAIRS OR REPLACEMENTS (Back)

PNPP No. 9308 Rev. 9/11/00 NQI-1741

9. Remarks: NONE

NO NAMEPLATE/STAMPING PERFORMED DUE TO THE INTERFACE CONTROLS OF RA-2370 BEING IN EFFECT AND JURISDICTIONAL AUTHORITY CONCURRENCE HAVING BEEN RECEIVED.

Note: Attach all applicable Manufacturer's Data Reports. Supplemental sheets such as lists, sketches, or drawings may be used, provided (1) size is 8 1/2 in. x 11 in., (2) information in items 1 through 6 of this report is included on each sheet, and (3) each sheet is numbered and the number of sheets is recorded on the front of this form.

CERTIFICATE OF COMPLIANCE

I, Russ Matthys, certify that to the best of my knowledge and belief the statements made in this report are correct and the repair, modification or replacement of the items described above conforms to Section XI of the ASME Code and to the National Board Inspection Code "NR" rules.

National Board Certificate of Authorization No. 33 to use the "NR stamp expires 28 SEPT , 2008

Date 5-10-2007 Signed FENOC-PNPP (name of repair organization) Russ Matthys (authorized representative) QC Supervisor (title)

CERTIFICATE OF INSPECTION/INSERVICE INSPECTION

I, Thomas G. Laps, holding a valid commission issued by The National Board of Boiler and Pressure Vessel Inspectors and certificate of competency issued by the jurisdiction of OHIO and employed by HARTFORD STEAM BOILER CT. of HARTFORD, CT have inspected the repair, modification or replacement described in this report on MAY 14, 20 07 and state that to the best of my knowledge and belief, this repair, modification or replacement has been completed in accordance with Section XI of the ASME Code and the National Board Inspection Code "NR" rules.

By signing this certificate, neither the undersigned nor my employer makes any warranty, expressed or implied, concerning the work described in this report. Furthermore, neither the undersigned nor my employer shall be liable in any manner for any personal injury, property damage or loss of any kind arising from or connected with this inspection.

Date 5/14, 20 07 Signed Thomas G Laps (inspector) Commissions NB 9330 "N"A"A" Ohio Comm (National Board (include endorsements), and jurisdiction, and no.)

1E12-303

NIS-2/NR-1 OWNER'S REPORT FOR REPAIRS OR REPLACEMENTS

As required by the Provisions of the ASME Code Section XI

PNPP No. 9308 Rev 9/11/00 NQI-1741

1. Owner: FIRSTENERGY CORP. — Date 05-31-07
   10 Center Road, Perry, Ohio 44081 — Sheet 10F 2
2. Plant: Perry Nuclear Power Plant (PNPP) — Unit ONE
   10 Center Road, Perry, Ohio 44081 — ORDER 200174615 (Repair Org P.O. No., etc.)
3. Work Performed By: FIRSTENERGY Nuclear Operating Company PNPP — Type Code Symbol Stamp NR
   10 Center Road, Perry, Ohio 44081 — Authorization No. 33
   Expiration Date 09-28-2008
4. Identification of System: 1E12 Residual Heat Removal
5. (a) Applicable Construction Code: ASME SECTION III NC (NAME/SECTION/DIVISION/CLASS), 1974 Edition

   WINTER 19 75 Addenda Code Case(s) 1644-5, 1728, N-224, N-242, N-272, N-275, N-282, ~~N-410-1~~, N-413
   Qum 5/31/07

   (b) Construction Code used for repairs, modifications, or replacements: 1974 (Edition) WINTER 75 (Addenda) see above (Code Case(s))

   (c) ASME Code Section XI applicable for Inservice Inspection: 1989 (Edition) no (Addenda) n/a (Code Case(s))

   (d) Applicable Edition of Section XI Utilized for Repairs, Modification, or Replacements:

   19 89 n/a 19 n/a Addenda n/a Code Case(s)

   (e) Design Responsibilities FIRSTENERGY NUCLEAR OPERATING COMPANY PNPP
6. Identification of Components Repaired, Modified, or Replacement Components

Name of Component	Name of Manufacturer	Manufacturer Serial No.	Nat. Board No.	Other ID.	Year Built	Repair, Replacement, or Modification	ASME Code Stamped
Piping System	Pullman Power	1E12	83	N/A	1985	replacement	yes

7. Description of Work: Replaced 4X6 FLANGED RELIEF VALVE S/N-4 WITH NEW RELIEF VALVE S/N-5 . @ 1E12-F0055B.USING NEW 2" DIA PIPE HEAT # 99035, PIPE FLANGE HEAT TRACE # 4M38343, AND WELD ROD HEAT # F5512, AND 901213.
8. Test Conducted: Hydrostatic- ☐ Pneumatic- ☐ Nominal Operating Pressure- ☒ Other- ☐

   Pressure 315 psi Test Temperature 79.8 degrees F Code Case(s) ~~N/A~~ N-416-X2
   Qum 5-31-07
   TGL 6/11/07

9. Remarks: NONE

NO NAMEPLATE/STAMPING PERFORMED DUE TO THE INTERFACE CONTROLS OF RA-2370

BEING IN EFFECT AND JURISDICTIONAL AUTHORITY CONCURRENCE HAVING BEEN RECEIVED.

Note: Attach all applicable Manufacturer's Data Reports. Supplemental sheets such as lists, sketches, or drawings may be used, provided (1) size is 8 1/2 in. x 11 in., (2) information in items 1 through 6 of this report is included on each sheet, and (3) each sheet is numbered and the number of sheets is recorded on the front of this form.

CERTIFICATE OF COMPLIANCE

I, John W. Messenger, certify that to the best of my knowledge and belief the statements made in this report are correct and the repair, modification or replacement of the items described above conforms to Section XI of the ASME Code and to the National Board Inspection Code "NR" rules.

National Board Certificate of Authorization No. 33 to use the "NR stamp expires _____, 20 ____

Date 5-31, 20 07 Signed FENOC-PNPP (name of repair organization) (authorized representative) QE (title)

CERTIFICATE OF INSPECTION/INSERVICE INSPECTION

I, THOMAS G LAPS holding a valid commission issued by The National Board of Boiler and Pressure Vessel Inspectors and certificate of competency issued by the jurisdiction of OHIO and employed by HARTFORD STEAM BOILER CT of HARTFORD CT have inspected the repair, modification or replacement described in this report on JUNE 1, 20 07 and state that to the best of my knowledge and belief, this repair, modification or replacement has been completed in accordance with Section XI of the ASME Code and the National Board Inspection Code "NR" rules.

By signing this certificate, neither the undersigned nor my employer makes any warranty, expressed or implied, concerning the work described in this report. Furthermore, neither the undersigned nor my employer shall be liable in any manner for any personal injury, property damage or loss of any kind arising from or connected with this inspection.

Date 6/1, 20 07 Signed (inspector) Commissions NB9330"N" "I" "A" OHIO COMM. (National Board (include endorsements), and jurisdiction, and no.)

IE12-303 pg 2 of 2

FORM NV-1 CERTIFICATE HOLDERS' DATA REPORT FOR PRESSURE OR VACUUM RELIEF VALVES*
As Required by the Provisions of the ASME Code, Section III, Division 1

Pg. 1 of 2

1. Manufactured and certified by Target Rock; 1966E Broadhollow Rd.; E. Farmingdale, NY 11735
(name and address of NV Certificate Holder)
2. Manufactured for FirstEnergy Corporation; 10 Center Rd.; Perry, OH
(name and address of Purchaser)
3. Location of installation Perry Nuclear Power Plant; 10 Center Rd.; Perry, OH
(name and address)
4. Valve 76H-013 (Model no., series no.) Orifice size 2.94 (in.) Nom. Inlet size 4 (in.) Outlet size 6 (in.)
5. ASME Code, Section III, Division 1: 1974 (edition) Summer 1975 (addenda date) 2 (class) None (Code Case no.)
6. Type Spring (spring, pilot or power operated) 485 (set pressure, psig) N/A (blowdown, psi) 450°F (rated temp) 1100 (hydro,test,pig,inlet) at Ambient °F
7. Identification 5 (Cert. Holder's serial no.) N/A (CRN) 76H-013 Rev. D (drawing no.) N/A (Natl'l. Bd. no.) 2007 (year built)
8. Control ring settings Not Applicable

9. Pressure retaining items:

	Serial No. Or Identification	Mat'l. Spec. Including Type or Grade	Tensile Strength
Body	S/N 1	SA105	70 ksi
Bonnet or Yoke			
Support Rods			
Nozzle Seat	S/N 7	SA479 316L	70 ksi
Disk	S/N 11	SA564 630 H1100	140 ksi
Spring Washers			
Adjusting Screws			
Spindle			
Spring			
Bolting	Heat # 7244720	SA193 B7	125 ksi
Other Items			

10. Relieving capacity 3,442gpm@10% overpressure as certified by the National Board N/A (date)
11. Remarks: Outlet Flange S/N 1 SA105 70 ksi
Cap S/N 2 SA216 WCB 70 - 95 ksi

CERTIFICATION OF DESIGN

Design Specification certified by John S. Holton P.E. State PA Reg. No. 027024 E

Design Report certified by Not applicable P.E. State - Reg. No. -

CERTIFICATE OF COMPLIANCE

We certify that the statements made in this report are correct and that this pump or valve conforms to the rules for construction of the ASME Code, Section III, Division 1.

N Certificate of Authorization No. N-1949 Expires 12/12/2007

Date 2/28/2007 Name Target Rock (NV Certificate Holder) Signed R. E. Glazier, QA Manager (authorized representative)

* Supplemental information in form of lists, sketches, or drawings may be used provided (1) size is 8½ x 11, (2) information in items 1 through 4 on this Data Report is included on each sheet, (3) each sheet is numbered and the number of sheets is recorded at the top of this form.

(12/88) This form (E00037) may be obtained from the Order Dept., ASME, 22 Law Drive, Box 2300, Fairfield, NJ 07007-2300
REPRINT 6/93

Certificate Holder's Serial No. 5

CERTIFICATE OF INSPECTION

I, the undersigned, holding a valid commission issued by the National Board of Boiler and Pressure Vessel Inspectors and the State of Province of New York and employed by OneBeacon America Insurance Company of Boston, MA have inspected the pump, or valve, described in this Data Report on 2/28/07, and state that to the best of my knowledge and belief, the Certificate Holder has constructed this pump, or valve, in accordance with the ASME Code, Section III, Division 1.

By signing this certificate, neither the inspector nor his employer makes any warranty, expressed or implied, concerning the component described in this Data Report. Furthermore, neither the inspector nor his employer shall be liable in any manner for any personal injury or property damage or a loss of any kind arising from or connected with this inspection.

Date 2/28/07 Signed _____ Commissions NY 2669

(Authorized Inspector) (Nat'l. Bd.(incl. endorsements) and state or prov. and no.)

1E21-039

SHEET 1 OF 2

NIS-2/NR-1 OWNER'S REPORT FOR REPAIRS OR REPLACEMENTS

As required by the Provisions of the ASME Code Section XI

PNPP No. 9308 Rev. 9/11/00 NQI-1741

1. Owner: FIRSTENERGY CORP. Date 11/2/06
   10 Center Road, Perry, Ohio 44081 Sheet 1 of 2

2. Plant: Perry Nuclear Power Plant (PNPP) Unit 1
   10 Center Road, Perry, Ohio 44081 200192905
   (Repair Org. P.O. No., etc.)

3. Work Performed By: FIRSTENERGY Nuclear Operating Company PNPP Type Code Symbol Stamp NR
   10 Center Road, Perry, Ohio 44081 Authorization No. 33
   Expiration Date 9/28/08

4. Identification of System: Low Pressure Core Spray 1E21

5. (a) Applicable Construction Code: ASME Section III class 2 (NAME/SECTION/DIVISION/CLASS), 1974 Edition

   Winter 19 76 Addenda Code Case(s) N/A

   (b) Construction Code used for repairs, modifications, or replacements: 1974 (Edition) W76 (Addenda) N/A (Code Case(s))

   (c) ASME Code Section XI applicable for Inservice Inspection: 1989 (Edition) N/A (Addenda) N/A (Code Case(s))

   (d) Applicable Edition of Section XI Utilized for Repairs, Modification, or Replacements:

   19 89, N/A 19 N/A Addenda N/A (Code Case(s))

   (e) Design Responsibilities FirstEnergy Corp

6. Identification of Components Repaired, Modified, or Replacement Components

Name of Component	Name of Manufacturer	Manufacturer Serial No.	Nat. Board No.	Other ID.	Year Built	Repair, Replacement, or Modification	ASME Code Stamped
Pump	Bingham Willamette	1A017	797	N/A	1980	Replacement	Yes

7. Description of Work: Removed rotating element S/N 1A022 and installed rotating element S/N 1A017.
   Note the pump casing was not changed.

8. Test Conducted: Hydrostatic- ☐ Pneumatic- ☐ Nominal Operating Pressure- ☒ Other- ☐
   Pressure 50 psi Test Temperature 77 degrees F Code Case(s) N/A

NIS-2/NR-1 OWNER'S REPORT FOR REPAIRS OR REPLACEMENTS (Back)

PNPP No. 9308 Rev. 9/11/00 NQI-1741

9. Remarks: ITEM IS 1E21C0002 MJT 7/9/07 TGL 7/9/07

NO NAMEPLATE/STAMPING PERFORMED DUE TO THE INTERFACE CONTROLS OF RA-2370

BEING IN EFFECT AND JURISDICTIONAL AUTHORITY CONCURRENCE HAVING BEEN RECEIVED.

Note: Attach all applicable Manufacturer's Data Reports. Supplemental sheets such as lists, sketches, or drawings may be used, provided (1) size is 8 1/2 in. x 11 in., (2) information in items 1 through 6 of this report is included on each sheet, and (3) each sheet is numbered and the number of sheets is recorded on the front of this form.

CERTIFICATE OF COMPLIANCE

I, Michael J Tepsick, certify that to the best of my knowledge and belief the statements made in this report are correct and the repair, modification or replacement of the items described above conforms to Section XI of the ASME Code and to the National Board Inspection Code "NR" rules.

National Board Certificate of Authorization No. 33 to use the "NR stamp expires 28 Sept., 20 08

Date 2 Nov., 20 06 Signed FENOC-PNPP (name of repair organization) [signature] (authorized representative) QC Tech. (title)

CERTIFICATE OF INSPECTION/INSERVICE INSPECTION

I, Thomas G Laps, holding a valid commission issued by The National Board of Boiler and Pressure Vessel Inspectors and certificate of competency issued by the jurisdiction of OHIO and employed by HSB CT. of Hartford, Conn. have inspected the repair, modification or replacement described in this report on Nov. 3, 20 06 and state that to the best of my knowledge and belief, this repair, modification or replacement has been completed in accordance with Section XI of the ASME Code and the National Board Inspection Code "NR" rules.

By signing this certificate, neither the undersigned nor my employer makes any warranty, expressed or implied, concerning the work described in this report. Furthermore, neither the undersigned nor my employer shall be liable in any manner for any personal injury, property damage or loss of any kind arising from or connected with this inspection.

Date 11/3, 20 06 Signed Thomas G Laps (inspector) Commissions NB 9330 "N" "I" "A" Ohio Comm. (National Board (include endorsements), and jurisdiction, and no.)

IE 21-039 SHEET 2 OF 2

FORM NPV-1 MANUFACTURERS' DATA REPORT FOR NUCLEAR PUMPS OR VALVES*
(As Required by the Provisions of the ASME Code, Section III, Div. 1)

1. Manufactured by Bingham-Willamette Co., 2800 NW Front Ave., Portland, Oregon 97210 (Name and Address of Manufacturer)
2. Manufactured for Gilbert-Commonwealth/Cleveland Electric Illuminating (Name and Address of Purchaser or Owner)
3. Location of Installation Perry Nuclear Power Plant Units 1 & 2 (Name and Address)
4. Pump or Valve Pump. Nominal Inlet Size 2 (inch) Outlet Size 2 (inch)

	(a) Model No., Series No. or Type	(b) Manufacturer's Serial No.	(c) Canadian Registration No.	(d) Drawing No.	(e) Class	(f) Nat'l. Bd. No.	(g) Year Built
(1)	CAP	1A017	NA	FD 1A015/22	II	NB-797	1980
(2)							
(3)							
(4)							
(5)							
(6)							
(7)							
(8)							
(9)							
(10)							

5. Water Leg Pump (Brief description of service for which equipment was designed)

6. Design Conditions 150 psi (Pressure) 140 °F (Temperature) or Valve Pressure Class II (1)
7. Cold Working Pressure 150 psi at 100°F.
8. Pressure Retaining Pieces

Mark No.	Material Spec. No.	Manufacturer	Remarks
(a) Castings			
1129-77-3	SA-351 CF8	Quali-Cast	Case
1129-77-3	SA-351 CF8	Quali-Cast	Stuffing Box
1147-77-8	SA-351 CF8	Quali-Cast	Seal Gland
(b) Forgings			

S.O. 1A017
ITEM See Data Report
PAGE 3

(1) For manually operated valves only.

* Supplemental sheets in form of lists, sketches or drawings may be used provided (1) size is 8-1/2" x 11", (2) information in items 1, 2 and 5 on this data report is included on each sheet, and (3) each sheet is numbered and number of sheets is recorded at top of this form.

(3/77) This form (E00037) may be obtained from the Order Dept., ASME, 345 E. 47 St., New York, N.Y. 10017

FORM NPV-1 (Back)

Mark No.	Material Spec. No.	Man ufacturer	Remarks
(c) Bolting			
8784	SA-193 B7	Metrix	Stud, Case
8785	SA-194 2H	Metrix	Nut, Case
0124	SA-193 B8M	Metrix	Stud, Gland
8787	SA-194 B8M	Metrix	Nut, Gland
A	SA-449 Cl 2	Metrix	Capscrew Bracket, Mot
A	SA-325 Tp 1	Metrix	Bolt, Pump
0610	SA-193 B7	Metrix	Taper Pin
P.O. 1-45565	SA-192 304	Familian	Plug, Drain
(d) Other Parts (Seal Circulation Piping)			
TH4051	SA-312 304	Tube Sales	Pipe
VTO	SA-182 304	Familian	Tee
VTO	SA-182 304	Familian	Elbow
VHV	SA-182 304	Familian	Plug
0637	SA-182 304	Metrix	Orifice
VDO, VFA, VKO	SA-182 304	Familian	Union

9. Hydrostatic test 225/900 psi.

CERTIFICATE OF COMPLIANCE

We certify that the statements made in this report are correct and that this pump, or valve, conforms to the rules of construction of the ASME Code for Nuclear Power Plant Components, Section III, Div. 1, Edition 1974, Addenda W'76 (Date), Code Case No. NA, Date 4-22-80

Signed Bingham-Willamette Company (Manufacturer) by [signature]

Our ASME Certificate of Authorization No. N-1654 to use the N (N) (NPV) symbol expires 2/28/83 (Date).

CERTIFICATION OF DESIGN

Design information on file at Bingham-Willamette Company

Stress analysis report (Class 1 only) on file at NA

Design specifications certified by (1) Hiram R. Reppert

PE State Penn Reg. No. 24928E

Stress analysis certified by (1) Paul Oliver - Van Gulik Assoc.

PE State Oregon Reg. No. 6261

(1) Signature not required. List name only.

CERTIFICATE OF SHOP INSPECTION

I, the undersigned, holding a valid commission issued by the National Board of Boiler and Pressure Vessel Inspectors and the State or Province of Oregon and employed by Department of Commerce have inspected the pump, or valve, described in this Data Report on 4.23 19 80 and state that to the best of my knowledge and belief, the Manufacturer has constructed this pump, or valve, in accordance with the ASME Code, Section III.

By signing this certificate, neither the Inspector nor his employer makes any warranty, expressed or implied, concerning the equipment described in this Data Report. Furthermore, neither the Inspector nor his employer shall be liable in any manner for any personal injury or property damage or a loss of any kind arising from or connected with this inspection.

Date 4.23 19 80

[signature] (Inspector) Commissions NB 3037 Ore. 556 (Nat'l Bd., State, Prov. and No.)

1E22-062

NIS-2/NR-1 OWNER'S REPORT FOR REPAIRS OR REPLACEMENTS

As required by the Provisions of the ASME Code Section XI

PNPP No. 9308 Rev. 9/11/00 NQI-1741

1 Owner: FIRSTENERGY CORP.
10 Center Road, Perry, Ohio 44081

Date 10/10/05
Sheet 1 of 2

2. Plant: Perry Nuclear Power Plant (PNPP)
10 Center Road, Perry, Ohio 44081

Unit 1
200170404
(Repair Org. P.O. No., etc.)

3. Work Performed By: FIRSTENERGY Nuclear Operating Company PNPP
10 Center Road, Perry, Ohio 44081

Type Code Symbol Stamp NR
Authorization No. 33
Expiration Date 9/28/08

4. Identification of System: 1E22 High Pressure Core Spray

5. (a) Applicable Construction Code: ASME Section III Class 2 (NAME/SECTION/DIVISION/CLASS), 1974 Edition

Winter 19 76 Addenda Code Case(s) n/a

(b) Construction Code used for repairs, modifications, or replacements: 74 (Edition) w 76 (Addenda) n/a (Code Case(s))

(c) ASME Code Section XI applicable for Inservice Inspection: 1989 (Edition) none (Addenda) n/a (Code Case(s))

(d) Applicable Edition of Section XI Utilized for Repairs, Modification, or Replacements:

19 89, none 19 none Addenda n/a (Code Case(s))

(e) Design Responsibilities FIRSTENERGY Corp.

6 Identification of Components Repaired, Modified, or Replacement Components

Name of Component	Name of Manufacturer	Manufacturer Serial No.	Nat. Board No.	Other ID.	Year Built	Repair, Replacement, or Modification	ASME Code Stamped
PUMP	Bingham Willamette	1A018	798	1E22-C003	1980	Replacement	Yes

7. Description of Work: Worked the pump using replacement stuffing box and seal gland fron pump s/n 1A017.

8. Test Conducted: Hydrostatic- ☐ Pneumatic- ☐ Nominal Operating Pressure- ☒ Other- ☐

Pressure 51 psi Test Temperature 110 degrees F Code Case(s) n/a

NIS-2/NR-1 OWNER'S REPORT FOR REPAIRS OR REPLACEMENTS (Back)

PNPP No. 9308 Rev. 9/11/00 NQI-1741

9. Remarks:

NO NAMEPLATE/STAMPING PERFORMED DUE TO THE INTERFACE CONTROLS OF RA-2370 BEING IN EFFECT AND JURISDICTIONAL AUTHORITY CONCURRENCE HAVING BEEN RECEIVED.

Note: Attach all applicable Manufacturer's Data Reports. Supplemental sheets such as lists, sketches, or drawings may be used, provided (1) size is 8 1/2 in. x 11 in., (2) information in items 1 through 6 of this report is included on each sheet, and (3) each sheet is numbered and the number of sheets is recorded on the front of this form.

CERTIFICATE OF COMPLIANCE

I, Michael J Tepsick, certify that to the best of my knowledge and belief the statements made in this report are correct and the repair, modification or replacement of the items described above conforms to Section XI of the ASME Code and to the National Board Inspection Code "NR" rules.

National Board Certificate of Authorization No. 33 to use the "NR stamp expires 28 Sept., 20 08

Date 10 Oct., 20 05 Signed FENOC-PNPP (name of repair organization) [signature] (authorized representative) QC Tech. (title)

CERTIFICATE OF INSPECTION/INSERVICE INSPECTION

I, Thomas G Laps, holding a valid commission issued by The National Board of Boiler and Pressure Vessel Inspectors and certificate of competency issued by the jurisdiction of OHIO and employed by HSB CT. of Hartford, Conn. have inspected the repair, modification or replacement described in this report on OCT. 10, 20 05 and state that to the best of my knowledge and belief, this repair, modification or replacement has been completed in accordance with Section XI of the ASME Code and the National Board Inspection Code "NR" rules.

By signing this certificate, neither the undersigned nor my employer makes any warranty, expressed or implied, concerning the work described in this report. Furthermore, neither the undersigned nor my employer shall be liable in any manner for any personal injury, property damage or loss of any kind arising from or connected with this inspection.

Date 10/10, 20 05 Signed Thomas G Laps (inspector) Commissions NB 9330 "N" "I" "A" Ohio Comm. (National Board (include endorsements), and jurisdiction, and no.)

1E22-062

PAGE 2 OF 2

FORM NPV-1 MANUFACTURERS' DATA REPORT FOR NUCLEAR PUMPS OR VALVES*
(As Required by the Provisions of the ASME Code, Section III, Div. 1)

1. Manufactured by Bingham-Willamette Co., 2800 NW Front Ave., Portland, Oregon 97210 (Name and Address of Manufacturer)
2. Manufactured for Gilbert-Commonwealth/Cleveland Electric Illuminating (Name and Address of Purchaser or Owner)
3. Location of Installation Perry Nuclear Power Plant Units 1 & 2 (Name and Address)
4. Pump or Valve Pump Nominal Inlet Size 2 (inch) Outlet Size 2 (inch)

	(a) Model No., Series No. or Type	(b) Manufacturers' Serial No.	(c) Canadian Registration No.	(d) Drawing No.	(e) Class	(f) Nat'l. Bd. No.	(g) Year Built
(1)	CAP	1A017	NA	FO 1A015/22	II	NB-797	1980
(2)							
(3)							
(4)							
(5)							
(6)							
(7)							
(8)							
(9)							
(10)							

5. Water Leg Pump (Brief description of service for which equipment was designed)
6. Design Conditions 150 (Pressure) psi 140 (Temperature) °F or Valve Pressure Class II (1)
7. Cold Working Pressure 150 psi at 100°F.
8. Pressure Retaining Pieces

Mark No.	Material Spec. No.	Manufacturer	Remarks
(a) Castings			
1129-77-3	SA-351 CF8	Quali-Cast	Case
1129-77-3	SA-351 CF8	Quali-Cast	Stuffing Box
1147-77-8	SA-351 CF8	Quali-Cast	Seal Gland
(b) Forgings			

GILBERT/COMMONWEALTH 3062 E/C-QA

S.O. 1A017
ITEM
PAGE 3

(1) For manually operated valves only.

* Supplemental sheets in form of lists, sketches or drawings may be used provided (1) size is 8-1/2" x 11", (2) information in items 1, 2 and 5 on this data report is included on each sheet, and (3) each sheet is numbered and number of sheets is recorded at top of this form.

(3/77) This form (E00037) may be obtained from the Order Dept., ASME, 345 E. 47 St., New York, N.Y. 10017

FORM NPV-1 (Back)

Mark No.	Material Spec. No.	Manufacturer	Remarks
(c) Bolting			
8784	SA-193 B7	Metrix	Stud, Case
8785	SA-194 2H	Metrix	Nut, Case
0124	SA-193 B8M	Metrix	Stud, Gland
8787	SA-194 B8M	Metrix	Nut, Gland
A	SA-449 Cl 2	Metrix	Capscrew Bracket, Mot
A	SA-325 Tp 1	Metrix	Bolt, Pump
0610	SA-193 B7	Metrix	Taper Pin
P.O. 1-45565	SA-192 304	Familian	Plug, Drain
(d) Other Parts (Seal Circulation Piping)			
TH4051	SA-312 304	Tube Sales	Pipe
V10	SA-182 304	Familian	Tee
V10	SA-182 304	Familian	Elbow
VHV	SA-182 304	Familian	Plug
0637	SA-182 304	Metrix	Orifice
VDO, VFA, VKO	SA-182 304	Familian	Union

9. Hydrostatic test 225/900 psi.

CERTIFICATE OF COMPLIANCE

We certify that the statements made in this report are correct and that this pump, or valve, conforms to the rules of construction of the ASME Code for Nuclear Power Plant Components, Section III, Div. I., Edition 1974, Addenda W'76 (Date), Code Case No. NA, Date 4-23-80

Signed Bingham-Willamette Company (Manufacturer) by [signature]

Our ASME Certificate of Authorization No. N-1654 to use the N (N) (NPV) symbol expires 2/28/83 (Date)

CERTIFICATION OF DESIGN

Design information on file at Bingham-Willamette Company

Stress analysis report (Class 1 only) on file at NA

Design specifications certified by (1) Hiram R. Reppert

PE State Penn Reg. No. 24928E

Stress analysis certified by (1) Paul Oliver - Van Gulik Assoc.

PE State Oregon Reg. No. 6261

(1) Signature not required. List name only.

CERTIFICATE OF SHOP INSPECTION

I, the undersigned, holding a valid commission issued by the National Board of Boiler and Pressure Vessel Inspectors and the State or Province of Oregon and employed by Department of Commerce have inspected the pump, or valve, described in this Data Report on 4-23 19 80 and state that to the best of my knowledge and belief, the Manufacturer has constructed this pump, or valve, in accordance with the ASME Code, Section III.

By signing this certificate, neither the Inspector nor his employer makes any warranty, expressed or implied, concerning the equipment described in this Data Report. Furthermore, neither the Inspector nor his employer shall be liable in any manner for any personal injury or property damage or a loss of any kind arising from or connected with this inspection.

Date 4-23 19 80

[signature] (Inspector) Commissions NB 3037 Ore 556 (Nat'l Bd., State, Prov. and No.)

1E22-063

NIS-2/NR-1 OWNER'S REPORT FOR REPAIRS OR REPLACEMENTS

As required by the Provisions of the ASME Code Section XI

PNPP No. 9308 Rev. 9/11/00 NQI-1741

1. Owner: FIRSTENERGY CORP. Date 1-24-06
10 Center Road, Perry, Ohio 44081 Sheet 1 of 2

2. Plant: Perry Nuclear Power Plant (PNPP) Unit one
10 Center Road, Perry, Ohio 44081 order 200192276 R/0
(Repair Org. P.O. No., etc.)

3. Work Performed By: FIRSTENERGY Nuclear Operating Company PNPP Type Code Symbol Stamp NR
10 Center Road, Perry, Ohio 44081 Authorization No. 33
Expiration Date 09-28-2008

4. Identification of System: 1E22 High Pressure Core Spray

5. (a) Applicable Construction Code: ASME SECTION III NC (NAME/SECTION/DIVISION/CLASS), 1974 Edition
winter 19 75 Addenda Code Case 1644-5, 1683-1, N224-1, N240, N242, N272, N275, N413.

(b) Construction Code used for repairs, modifications, or replacements: 1974 (Edition) winter 75 (Addenda) see abov (Code Case(s))

(c) ASME Code Section XI applicable for Inservice Inspection: 1889 (Edition) no (Addenda) n/a (Code Case(s))

(d) Applicable Edition of Section XI Utilized for Repairs, Modification, or Replacements:
19 89 , n/a 19 n/a Addenda n/a (Code Case(s))

(e) Design Responsibilities First Energy Nuclear Operating Company PNPP

6. Identification of Components Repaired, Modified, or Replacement Components

Name of Component	Name of Manufacturer	Manufacturer Serial No.	Nat. Board No.	Other ID.	Year Built	Repair, Replacement, or Modification	ASME Code Stamped
PIPING SYSTEM	PULLMAN POWER	1E22	86	NA	1985	RPL	YES

7. Description of Work: Replaced horizontal waterleg pump S/N 1A017 at 1E22-C0003 with new waterleg pump S/N 1A018..

8. Test Conducted: Hydrostatic- ☐ Pneumatic- ☐ Nominal Operating Pressure- X Other- ☐
Pressure 55 psi Test Temperature 111 degrees F Code Case(s) NA

NIS-2/NR-1 OWNER'S REPORT FOR REPAIRS OR REPLACEMENTS (Back)

PNPP No. 9308 Rev 9/11/00 NQI-1741

9 Remarks: NA

NO NAMEPLATE/STAMPING PERFORMED DUE TO THE INTERFACE CONTROLS OF RA-2370

BEING IN EFFECT AND JURISDICTIONAL AUTHORITY CONCURRENCE HAVING BEEN RECEIVED.

Note: Attach all applicable Manufacturer's Data Reports. Supplemental sheets such as lists, sketches, or drawings may be used, provided (1) size is 8 1/2 in. x 11 in., (2) information in items 1 through 6 of this report is included on each sheet, and (3) each sheet is numbered and the number of sheets is recorded on the front of this form.

CERTIFICATE OF COMPLIANCE

I, John W. Messenger, certify that to the best of my knowledge and belief the statements made in this report are correct and the repair, modification or replacement of the items described above conforms to Section XI of the ASME Code and to the National Board Inspection Code "NR" rules.

National Board Certificate of Authorization No. 33 to use the "NR stamp expires 9-28, 20 08

Date 1/23, 20 06 Signed FENOC-PNPP (name of repair organization) (authorized representative) QE (title)

CERTIFICATE OF INSPECTION/INSERVICE INSPECTION

I, Thomas Laps, holding a valid commission issued by The National Board of Boiler and Pressure Vessel Inspectors and certificate of competency issued by the jurisdiction of OHIO and employed by HSB CT., of Hartford, Conn. have inspected the repair, modification or replacement described in this report on JAN. 25 20 06 and state that to the best of my knowledge and belief, this repair, modification or replacement has been completed in accordance with Section XI of the ASME Code and the National Board Inspection Code "NR" rules.

By signing this certificate, neither the undersigned nor my employer makes any warranty, expressed or implied, concerning the work described in this report. Furthermore, neither the undersigned nor my employer shall be liable in any manner for any personal injury, property damage or loss of any kind arising from or connected with this inspection.

Date 1/25, 20 06 Signed Thomas G Laps (inspector) Commissions NB 9330 "N" "I" "A" OHIO COMM. (National Board (include endorsements), and jurisdiction, and no.)

IE22-0063
Sheet 2 of 2

FORM NPV-1 MANUFACTURERS' DATA REPORT FOR NUCLEAR PUMPS OR VALVES*
(As Required by the Provisions of the ASME Code, Section III, Div. 1)

1. Manufactured by Bingham-Willamette Co., 2800 NW Front Ave., Portland, Oregon 97210
(Name and Address of Manufacturer)
2. Manufactured for Gilbert-Commonwealth/Cleveland Electric Illuminating
(Name and Address of Purchaser or Owner)
3. Location of Installation Perry Nuclear Power Plant Units 1 & 2
(Name and Address)
4. Pump or Valve Pump. Nominal Inlet Size 2 (inch) Outlet Size 2 (inch)

	(a) Model No., Series No. or Type	(b) Manufacturers' Serial No.	(c) Canadian Registration No.	(d) Drawing No.	(e) Class	(f) Nat'l. Bd. No.	(g) Year Built
(1)	CAP	1A018	NA	FD-1A015/22	II	NB-798	1980
(2)							
(3)							
(4)							
(5)							
(6)							
(7)							
(8)							
(9)							
(10)							

5. Water Leg Pump
(Brief description of service for which equipment was designed)

6. Design Conditions 150 (Pressure) psi 140 (Temperature) °F or Valve Pressure Class II (1)
7. Cold Working Pressure 150 psi at 100°F.
8. Pressure Retaining Pieces

Mark No.	Material Spec. No.	Manufacturer	Remarks
(a) Castings			
1147-77-4	SA-351 CF8	Quali-Cast	Case
1147-77-4	SA-351 CF8	Quali-Cast	Stuffing Box
1147-77-2	SA-351 CF8	Quali-Cast	Seal Gland
(b) Forgings			

GILBERT/COMMONWEALTH 3062 G/C-QA

S.O. 1A018
ITEM Cadt. Data Report
PAGE 3

(1) For manually operated valves only.

* Supplemental sheets in form of lists, sketches or drawings may be used provided (1) size is 8-1/2" x 11", (2) information in items 1, 2 and 5 on this data report is included on each sheet, and (3) each sheet is numbered and number of sheets

FORM NPV-1 (Back)

Mark No.	Material Spec. No	Manu. urer	Remarks
(c) Bolting			
8784	SA-193 B7	Metrix	Stud, Case
8785	SA-194 2H	Metrix	Nut, Case
0124	SA-193 B8M	Metrix	Stud, Gland
8787	SA-194 B8M	Metrix	Nut, Gland
A	SA-449 Cl 2	Metrix	Capscrew Bracket, Mo
A	SA-325 Tp 1	Metrix	Bolt, Pump
0610	SA-193 B7	Metrix	Taper Pin
P.O. 1-45565	SA-192 304	Familian	Plug, Drain
(d) Other Parts (Seal Circulation Piping)			
TH4051	SA-312 304	Tube Sales	Pipe
V10	SA-182 304	Familian	Tee
V10	SA-182 304	Familian	Elbow
VHV	SA-182 304	Familian	Plug
0637	SA-182 304	Metrix	Orifice
VDO,VFA,VKO	SA-182 304	Familian	Union

9. Hydrostatic test 225/900 psi.

CERTIFICATE OF COMPLIANCE

We certify that the statements made in this report are correct and that this pump, or valve, conforms to the rules of construction of the ASME Code for Nuclear Power Plant Components. Section III, Div. I., Edition 1974 *.*
Addenda W'76 (Date), Code Case No. NA, Date 4-22-80
Signed Bingham-Willamette Company (Manufacturer) by [signature]
Our ASME Certificate of Authorization No. N-1654 to use the N (N) (NPV) symbol expires 2/28/83 (Date).

CERTIFICATION OF DESIGN

Design information on file at Bingham-Willamette Company
Stress analysis report (Class 1 only) on file at NA

Design specifications certified by (1) Hiram R. Reppert
PE State Penn Reg. No. 24928E
Stress analysis certified by (1) Paul Oliver - Van Gulik Assoc.
PE State Oregon Reg. No. 6261

(1) Signature not required. List name only.

CERTIFICATE OF SHOP INSPECTION

I, the undersigned, holding a valid commission issued by the National Board of Boiler and Pressure Vessel Inspectors and the State or Province of Oregon and employed by Department of Commerce have inspected the pump, or valve, described in this Data Report on 4-23 1980 and state that to the best of my knowledge and belief, the Manufacturer has constructed this pump, or valve, in accordance with the ASME Code, Section III.

By signing this certificate, neither the Inspector nor his employer makes any warranty, expressed or implied, concerning the equipment described in this Data Report. Furthermore, neither the Inspector nor his employer shall be liable in any manner for any personal injury or property damage or a loss of any kind arising from or connected with this inspection.

Date 4-23 1980
[signature] (Inspector) Commissions NB 8037 Ore 554 (Nat'l Bd., State, Prov. and No.)

1E22-068

SHEET 1 OF 2

NIS-2/NR-1 OWNER'S REPORT FOR REPAIRS OR REPLACEMENTS

As required by the Provisions of the ASME Code Section XI

PNPP No. 9308 Rev. 9/11/00 NQI-1741

1. Owner: FIRSTENERGY CORP. Date 11/6/06
   10 Center Road, Perry, Ohio 44081 Sheet 1 of 2

2. Plant: Perry Nuclear Power Plant (PNPP) Unit 1
   10 Center Road, Perry, Ohio 44081 200233328 (Repair Org. P.O. No., etc.)

3. Work Performed By: FIRSTENERGY Nuclear Operating Company PNPP Type Code Symbol Stamp NR
   10 Center Road, Perry, Ohio 44081 Authorization No. 33
   Expiration Date 9/28/08

4. Identification of System: HIGH PRESSURE CORE SPRAY 1E22

5. (a) Applicable Construction Code: ASME Section III class 2 (NAME/SECTION/DIVISION/CLASS), 1974 Edition

   Winter 19 76 Addenda Code Case(s) N/A

   (b) Construction Code used for repairs, modifications, or replacements: 1974 (Edition) W76 (Addenda) N/A (Code Case(s))

   (c) ASME Code Section XI applicable for Inservice Inspection: 1989 (Edition) N/A (Addenda) N/A (Code Case(s))

   (d) Applicable Edition of Section XI Utilized for Repairs, Modification, or Replacements:

   19 89, N/A 19 N/A Addenda N/A (Code Case(s))

   (e) Design Responsibilities FirstEnergy Corp

6. Identification of Components Repaired, Modified, or Replacement Components

Name of Component	Name of Manufacturer	Manufacturer Serial No.	Nat. Board No.	Other ID.	Year Built	Repair, Replacement, or Modification	ASME Code Stamped
Pump	Bingham Willamette	1A019	799	N/A	1980	Replacement	Yes

7. Description of Work: Removed rotating element S/N 1A018 and installed rotating element S/N 1A022 (including stuffing box and seal gland) Note the pump casing was not changed.

8. Test Conducted: Hydrostatic- ☐ Pneumatic- ☐ Nominal Operating Pressure- ☒ Other- ☐

   Pressure 51 psi Test Temperature 112 degrees F Code Case(s) N/A

NIS-2/NR-1 OWNER'S REPORT FOR REPAIRS OR REPLACEMENTS (Back)

PNPP No. 9308 Rev. 9/11/00 NQI-1741

9. Remarks: ITEM IS 1E22C0003. 7-9-07 TGL 7/9/07

NO NAMEPLATE/STAMPING PERFORMED DUE TO THE INTERFACE CONTROLS OF RA-2370

BEING IN EFFECT AND JURISDICTIONAL AUTHORITY CONCURRENCE HAVING BEEN RECEIVED.

Note: Attach all applicable Manufacturer's Data Reports. Supplemental sheets such as lists, sketches, or drawings may be used, provided (1) size is 8 1/2 in. x 11 in., (2) information in items 1 through 6 of this report is included on each sheet, and (3) each sheet is numbered and the number of sheets is recorded on the front of this form.

CERTIFICATE OF COMPLIANCE

I, Michael J Tepsick, certify that to the best of my knowledge and belief the statements made in this report are correct and the repair, modification or replacement of the items described above conforms to Section XI of the ASME Code and to the National Board Inspection Code "NR" rules.

National Board Certificate of Authorization No. 33 to use the "NR stamp expires 28 Sept., 20 08

Date 6 Nov., 20 06 Signed FENOC-PNPP (name of repair organization) (authorized representative) QC Tech. (title)

CERTIFICATE OF INSPECTION/INSERVICE INSPECTION

I, Thomas G Laps, holding a valid commission issued by The National Board of Boiler and Pressure Vessel Inspectors and certificate of competency issued by the jurisdiction of OHIO and employed by HSB CT. of Hartford, Conn. have inspected the repair, modification or replacement described in this report on NOV. 17 20 06 and state that to the best of my knowledge and belief, this repair, modification or replacement has been completed in accordance with Section XI of the ASME Code and the National Board Inspection Code "NR" rules.

By signing this certificate, neither the undersigned nor my employer makes any warranty, expressed or implied, concerning the work described in this report. Furthermore, neither the undersigned nor my employer shall be liable in any manner for any personal injury, property damage or loss of any kind arising from or connected with this inspection.

Date 11/17, 20 06 Signed (inspector) Commissions NB 9330 "N" "I" "A" Ohio Comm. (National Board (include endorsements), and jurisdiction, and no.)

1E22-068 SHEET 2 OF 2

FORM NPV-1 MANUFACTURERS' DATA REPORT FOR NUCLEAR PUMPS OR VALVES*
(As Required by the Provisions of the ASME Code, Section III, Div. 1)

1. Manufactured by Bingham-Willamette Co., 2800 NW Front Ave., Portland, Oregon 97210
(Name and Address of Manufacturer)
2. Manufactured for Gilbert-Commonwealth/Cleveland Electric Illuminating
(Name and Address of Purchaser or Owner)
3. Location of Installation Perry Nuclear Power Plant Units 1 & 2
(Name and Address)
4. Pump or Valve Pump Nominal Inlet Size 2 (inch) Outlet Size 2 (inch)

	(a) Model No., Series No. or Type	(b) Manufacturer's Serial No.	(c) Canadian Registration No.	(d) Drawing No.	(e) Class	(f) Nat'l. Bd. No.	(g) Year Built
(1)	CAP	1A022	NA	FD 1AG15/22	II	NB-802	1980
(2)							
(3)							
(4)							
(5)							
(6)							
(7)							
(8)							
(9)							
(10)							

5. Water Leg Pump
(Brief description of service for which equipment was designed)

6. Design Conditions: 150 (Pressure) psi 140 (Temperature) °F or Valve Pressure Class II (1)
7. Cold Working Pressure 150 psi at 100°F.
8. Pressure Retaining Pieces

Mark No.	Material Spec. No.	Manufacturer	Remarks
(a) Castings			
1172-77-7	SA-351 CF8	Quali-Cast	Case
1189-77-8	SA-351 CF8	Quali-Cast	Stuffing Box
(b) Plate - Seal Gland			
P-53793	SA-240 316L	Eastern Stainless	Seal Gland

S.O. 12022
ITEM Code Data Report
PAGE 2 of 3

(1) For manually operated valves only.

* Supplemental sheets in form of lists, sketches or drawings may be used provided (1) size is 8-1/2" x 11", (2) information in items 1, 2 and 5 on this data report is included on each sheet, and (3) each sheet is numbered and number of sheets is recorded at top of this form.

(3/77) This form (E00037) may be obtained from the Order Dept., ASME, 345 E. 47 St., New York, N.Y. 10017

FORM NPV-1 (Back)

Mark No.	Material Spec. No.	Manufacturer	Remarks
(c) Bolting			
8784	SA-193 B7	Metrix	Stud, Case
8785	SA-194 2H	Metrix	Nut, Case
0124	SA-193 B8M	Metrix	Stud, Gland
8787	SA-194 8M	Metrix	Nut, Gland
A	SA-449 Cl 2	Metrix	Capscrew Bracket, Motc
A	SA-325 Tp 1	Metrix	Bolt, Pump
0610	SA-193 B7	Metrix	Taper Pin
P.O. 1-45565	SA-192 304	Familian	Plug, Drain
(d) Other Parts (Seal Circulat on Piping)			
TH4051	SA-312 304	Tube Sales	Pipe
VTO	SA-182 304	Familian	Tee
VTO	SA-182 304	Familian	Elbow
VHV	SA-182 304	Familian	Plug
0637	SA-182 304	Metrix	Orifice
VDO, VFA, VKO	SA-182 304	Familian	Union

9. Hydrostatic test 225/900 psi.

CERTIFICATE OF COMPLIANCE

We certify that the statements made in this report are correct and that this pump or valve, conforms to the rules of construction of the ASME Code, for Nuclear Power Plant Components, Section III, Div. 1, Edition 1974, Addenda W'76 (Date), Code Case No. NA, Date 4-22-80

Signed Bingham-Willamette Company (Manufacturer) by [signature]

Our ASME Certificate of Authorization No. N-1654 to use the N (N) (NPV) symbol expires 2/28/83 (Date).

CERTIFICATION OF DESIGN

Design information on file at Bingham-Willamette Company

Stress analysis report (Class 1 only) on file at NA

Design specifications certified by (1) Hiram R. Reppert

PE State Penn Reg. No. 24928E

Stress analysis certified by (1) Paul Oliver - Van Gulik Assoc.

PE State Oregon Reg. No. 6261

(1) Signature not required. List name only.

CERTIFICATE OF SHOP INSPECTION

I, the undersigned, holding a valid commission issued by the National Board of Boiler and Pressure Vessel Inspectors and the State or Province of Oregon and employed by Department of Commerce have inspected the pump or valve, described in this Data Report on 4-23 19 80 and state that to the best of my knowledge and belief the Manufacturer has constructed this pump, or valve, in accordance with the ASME Code, Section III.

By signing this certificate, neither the Inspector nor his employer makes any warranty, expressed or implied, concerning the equipment described in this Data Report. Furthermore, neither the Inspector nor his employer shall be liable in any manner for any personal injury or property damage or a loss of any kind arising from or connected with this inspection.

Date 4-23 19 80

[signature] (Inspector) Commissions [illegible] (Nat'l Bd., State, Prov. and No.)

1E22-069

NIS-2 OWNER'S REPORT FOR REPAIRS OR REPLACEMENTS

As Required by the Provisions of the ASME Code Section XI

PNPP No. 10282 Rev. 7/22/05 Page 1 of 2 NQI-1741

1. Owner: FIRSTENERGY CORP. (Name) — Date 1/26/07

10 Center Road, Perry, Ohio 44081 (Address) — Sheet 1 of 1

2. Plant: Perry Nuclear Power Plant (PNPP) (Name) — Unit 1

10 Center Road, Perry, Ohio 44081 (Address) — 200203387 (Repair Organization P.O. No., Job No., etc.)

3. Work Performed By: FIRSTENERGY CORP. (Name) — Type Code Symbol Stamp NR

10 Center Road, Perry, Ohio 44081 (Address) — Authorization No. 33

Expiration Date 9/28/08

4. Identification of System: HIGH PRESSURE CORE SPRAY 1E22

5. (a) Applicable Construction Code. N/A, 19 N/A Edition, N/A Addenda, N/A Code Case

(b) Applicable Edition of Section XI Utilized for Repairs or Replacements 19 89

6. Identification of Components Repaired or Replaced and Replacement Components

Name of Component	Name of Manufacturer	Manufacturer Serial No.	National Board No.	Other Identification	Year Built	Repaired, Replaced, or Replacement	ASME Code Stamped (Yes or No)
PIPING	N/A	N/A	N/A	1E22F541B	N/A	replacement	No

7. Description of Work: Replaced 2 way air start valve with new valve. (This item is not built to ASME Code but is in the ASME Section XI boundary)

8. Test Conducted: Hydrostatic- ☐ Pneumatic- ☐ Nominal Operating Pressure- ☒ Other- ☐

Pressure 230 psi Test Temperature 86 °F

NOTE: Supplemental sheets in form of lists, sketches, or drawings may be used, provided (1) size is 81/2 in. x 11 in., (20 information in Items 1 through 6 on this report is included on each sheet, and (3) each sheet is numbered and the number of sheets is recorded at the top of this form.

NIS-2 OWNER'S REPORT FOR REPAIRS OR REPLACEMENTS (Back)

9. Remarks: None

Applicable Manufacturer's Data Reports to be attached

CERTIFICATE OF COMPLIANCE

We certify that the statements made in this report are correct and this replacement (repair or replacement) conforms to the rules of the ASME Code, Section XI.

Type Code Symbol Stamp NR

Certificate of Authorization No. 33 Expiration Date 9/28/08

Signed SR QC TECH (Owner or Owner's Designee, Title) Date 14 FEBRUARY, 20 07

CERTIFICATE OF INSERVICE INSPECTION

I, the undersigned, holding a valid commission issued by the National Board of boiler and Pressure Vessel Inspectors and the State or Province of Ohio and employed by HSBCT of HARTFORD, CT. have inspected the components described in this Owner's report during the period MAY 2005 to FEB. 2007, and state that to the best of my knowledge and belief, the Owner has performed examinations and taken corrective measures described in this Owner's Report in accordance with the requirements of the ASME Code, Section XI.

By signing this certificate neither the Inspector nor his employer makes any warranty, expressed or implied, concerning the examinations and corrective measures described in the Owner's Report. Furthermore, neither the Inspector nor his employer shall be liable in any manner for any personal injury or property damage or a loss of any kind arising from or connected with this inspection.

Thomas G Lapp (Inspector's Signature) Commisions NB 9330 "N" "I" "A" OHIO COMM (National Board, State, Province, and Endorsements)

Date 2/14 20 07

1E22-070

NIS-2 OWNER'S REPORT FOR REPAIRS OR REPLACEMENTS

As Required by the Provisions of the ASME Code Section XI

PNPP No. 10282 Rev. 7/22/05 Page 1 of 2 NQI-1741

1. Owner: FIRSTENERGY CORP. (Name) — Date 1/26/07

10 Center Road, Perry, Ohio 44081 (Address) — Sheet 1 of 1

2. Plant: Perry Nuclear Power Plant (PNPP) (Name) — Unit 1

10 Center Road, Perry, Ohio 44081 (Address) — 200203386 (Repair Organization P.O. No., Job No., etc.)

3. Work Performed By: FIRSTENERGY CORP. (Name)

10 Center Road, Perry, Ohio 44081 (Address)

Type Code Symbol Stamp NR
Authorization No. 33
Expiration Date 9/28/08

4. Identification of System: HIGH PRESSURE CORE SPRAY 1E22

5 (a) Applicable Construction Code. N/A, 19 N/A Edition, N/A Addenda, N/A Code Case

(b) Applicable Edition of Section XI Utilized for Repairs or Replacements 19 89

6. Identification of Components Repaired or Replaced and Replacement Components

Name of Component	Name of Manufacturer	Manufacturer Serial No.	National Board No.	Other Identification	Year Built	Repaired, Replaced, or Replacement	ASME Code Stamped (Yes or No)
PIPING	N/A	N/A	N/A	1E22F541A	N/A	replacement	No

7. Description of Work: Replaced 2 way air start valve with new valve. (This item is not built to ASME Code but is in the ASME Section XI boundary).

8. Test Conducted: Hydrostatic- ☐ Pneumatic- ☐ Norninal Operating Pressure- ☒ Other- ☐

Pressure 230 psi Test Temperature 86 °F

NOTE: Supplemental sheets in form of lists, sketches, or drawings may be used, provided (1) size is 81/2 in. x 11 in., (20 information in Items 1 through 6 on this report is included on each sheet, and (3) each sheet is numbered and the number of sheets is recorded at the top of this form.

NIS-2 OWNER'S REPORT FOR REPAIRS OR REPLACEMENTS (Back)

9. Remarks: Slight air leak at mechanical joint was evaluated on CR 07-12502 and it was determined that
Applicable Manufacturer's Data Reports to be attached
the leak will have no detrimental effect on the system performance. The leak will be corrected in a future outage.

CERTIFICATE OF COMPLIANCE

We certify that the statements made in this report are correct and this replacement conforms to the rules of the ASME Code, Section XI.
repair or replacement

Type Code Symbol Stamp NR

Certificate of Authorization No 33 Expiration Date 9/28/08

Signed SR. QC TECH Date 14 FEBRUARY, 20 07
Owner or Owner's Designee, Title

CERTIFICATE OF INSERVICE INSPECTION

I, the undersigned, holding a valid commission issued by the National Board of boiler and Pressure Vessel Inspectors and the State or Province of Ohio and employed by HSBCT of HARTFORD, CT. have inspected the components described in this Owner's report during the period MAY 2005 to FEB. 2007, and state that to the best of my knowledge and belief, the Owner has performed examinations and taken corrective measures described in this Owner's Report in accordance with the requirements of the ASME Code, Section XI.

By signing this certificate neither the Inspector nor his employer makes any warranty, expressed or implied, concerning the examinations and corrective measures described in the Owner's Report. Furthermore, neither the Inspector nor his employer shall be liable in any manner for any personal injury or property damage or a loss of any kind arising from or connected with this inspection.

Thomas L Sager Commisions NB 9330 "N" "I" "A" OHIO COMM
Inspector's Signature National Board, State, Province, and Endorsements

Date 2/14 20 07

1 E22-072 Pg 1 of 2

NIS-2/NR-1 OWNER'S REPORT FOR REPAIRS OR REPLACEMENTS

As required by the Provisions of the ASME Code Section XI

PNPP No. 9308 Rev. 9/11/00 NQI-1741

1. Owner: FIRSTENERGY CORP. Date 5-10-07
   10 Center Road, Perry, Ohio 44081 Sheet 1 of 2

2. Plant: Perry Nuclear Power Plant (PNPP) Unit 1
   10 Center Road, Perry, Ohio 44081 200208363
   (Repair Org. P.O. No., etc.)

3. Work Performed By: FIRSTENERGY Nuclear Operating Company PNPP Type Code Symbol Stamp NR
   10 Center Road, Perry, Ohio 44081 Authorization No. 33
   Expiration Date 9-28-08

4. Identification of System: 1 E22 High Pressure Core Spray

5. (a) Applicable Construction Code: ASME Section III - Class II NC, 1974 Edition
   NAME/SECTION/DIVISION/CLASS

   Winter1975 Addenda Code Case(s) 1644-5, 1683-1, N-272, N-240, N-224-1, N-242,N-275, N-413

   (b) Construction Code used for repairs, modifications, or replacements: 1974 (Edition) W/75 (Addenda) N/A (Code Case(s))

   (c) ASME Code Section XI applicable for Inservice Inspection: 1989 (Edition) N/A (Addenda) N/A (Code Case(s))

   (d) Applicable Edition of Section XI Utilized for Repairs, Modification, or Replacements:

   19 89 , N/A 19 N/A Addenda N/A (Code Case(s))

   (e) Design Responsibilities FENOC

6. Identification of Components Repaired, Modified, or Replacement Components

Name of Component	Name of Manufacturer	Manufacturer Serial No.	Nat. Board No.	Other ID.	Year Built	Repair, Replacement, or Modification	ASME Code Stamped
PIPING SYSTEM	PULLMAN POWER	E22	86	1E22F0034	1985	REPLACEMENT	YES

7. Description of Work: Replace old with new valve SN E-295P-1-2 and connecting piping with new pipe (HT 99035) and elbow (HT 75187)

8. Test Conducted: Hydrostatic- ☐ Pneumatic- ☐ Nominal Operating Pressure- ☒ Other- ☐
   Pressure 33.4 psi Test Temperature 72.1 degrees F Code Case(s) N-416-2

NIS-2/NR-1 OWNER'S REPORT FOR REPAIRS OR REPLACEMENTS (Back)

PNPP No. 9308 Rev. 9/11/00 NQI-1741

9. Remarks: NONE

NO NAMEPLATE/STAMPING PERFORMED DUE TO THE INTERFACE CONTROLS OF RA-2370 BEING IN EFFECT AND JURISDICTIONAL AUTHORITY CONCURRENCE HAVING BEEN RECEIVED.

Note: Attach all applicable Manufacturer's Data Reports. Supplemental sheets such as lists, sketches, or drawings may be used, provided (1) size is 8 1/2 in. x 11 in., (2) information in items 1 through 6 of this report is included on each sheet, and (3) each sheet is numbered and the number of sheets is recorded on the front of this form.

CERTIFICATE OF COMPLIANCE

I, Russ Matthys, certify that to the best of my knowledge and belief the statements made in this report are correct and the repair, modification or replacement of the items described above conforms to Section XI of the ASME Code and to the National Board Inspection Code "NR" rules.

National Board Certificate of Authorization No. 33 to use the "NR stamp expires 28 SEPT, 2008

Date 5-10-07 Signed FENOC-PNPP (name of repair organization) Russ Matthys (authorized representative) QC Supervisor (title)

CERTIFICATE OF INSPECTION/INSERVICE INSPECTION

I, Thomas G. Laps, holding a valid commission issued by The National Board of Boiler and Pressure Vessel Inspectors and certificate of competency issued by the jurisdiction of OHIO and employed by HARTFORD STEAM BOILER CT. of HARTFORD, CT have inspected the repair, modification or replacement described in this report on MAY 11, 20 07 and state that to the best of my knowledge and belief, this repair, modification or replacement has been completed in accordance with Section XI of the ASME Code and the National Board Inspection Code "NR" rules.

By signing this certificate, neither the undersigned nor my employer makes any warranty, expressed or implied, concerning the work described in this report. Furthermore, neither the undersigned nor my employer shall be liable in any manner for any personal injury, property damage or loss of any kind arising from or connected with this inspection.

Date 5/11, 20 07 Signed Thomas G Laps (inspector) Commissions NB 9330 "N"I"A" Ohio Comm. (National Board (include endorsements), and jurisdiction, and no.)

1E22-072 Pg 2 of 2

FORM NPV-1 N CERTIFICATE HOLDERS' DATA REPORT FOR NUCLEAR PUMPS OR VALVES*
As Required by the Provisions of the ASME Code, Section III, Div. 1

1. Manufactured by Flowserve Corp., 701 First Street, Williamsport, PA 17701
(Name and Address of N Certificate Holder)
2. Manufactured for The Illuminating Company, P. O. Box 94608, Cleveland, OH 44101-4608
(Name and Address of Purchaser or Owner)
3. Location of Installation Perry NPP, 10 Center Road, Dock #1, North Perry, OH 44081
(Name and Address)
4. Pump or Valve Valve Nominal Inlet Size 2" (inch) Outlet Size 2" (inch)

	(a) Model No., Series No. or Type	(b) N Certificate Holder's Serial No.	(c) Canadian Registration No.	(d) Drawing No.	(e) Class	(f) Nat'l Bd. No.	(g) Year Built
(1)	Y-Globe	E-295P-1-2	N/A	750000126 5 R/A	1	N/A	1999
(2)							
(3)							
(4)							
(5)							
(6)							
(7)							
(8)							
(9)							
(10)							

5. 2" - 1500# Y-Globe Valve w/14" Impactor Handwheel
(Brief description of service for which equipment was designed)

6. Design Conditions 2685 (Pressure) psi 650 (Temperature) °F or Valve Pressure Class 1500 (1)
7. Cold Working Pressure 3705 psi at 100°F
8. Pressure Retaining Pieces

Mark No.	Material Spec. No.	Manufacturer	Remarks
(a) Castings			
N/A			
(b) Forgings			
Body HT #A22 S/N - 10	SA105	BW/IP Int'l Inc., Pump Div.	
Yoke HT #G3402	SA105	Patriot Forge, Inc.	

(1) For manually operated valves only.

* Supplemental sheets in form of lists, sketches or drawings may be used provided (1) size is 8-1/2" x 11", (2) information in items 1, 2 and 5 on this Data Report is included on each sheet, and (3) each sheet is numbered and number of sheets is recorded at top of this form.

RI SRJ

(10/77) This form (E00037) may be obtained from the Order Dept., ASME, 345 E. 47th St., New York, N.Y. 10017

FORM NPV-1 (Back)

S/N: E-29SP-1-2

Mark No.	Material Spec. No.	Manufacturer	Remarks
(c) Bolting			
N/A			
(d) Other Parts			
Bonnet R/S #316683	SA479-316	BW/IP Int'l Inc., Pump Div.	
S/N - 8			
Disc HT #715898	SA479-316	Carpenter Technology Corp.	
S/N - 4			

9. Hydrostatic test 5575 psi Disk Differential test pressure 4076 psi

CERTIFICATE OF COMPLIANCE

We certify that the statements made in this report are correct and that this pump or valve conforms to the rules of construction of the ASME Code for Nuclear Power Plant Components Section III, Div. 1, Edition 1977 Addenda Winter 1978 (Date) Code Case No. N/A Date 4/29/99

Signed Flowserve Corp. (N Certificate Holder) by [signature]

Our ASME Certificate of Authorization No. N1712 to use the N (N) symbol expires 4/15/01 (Date)

CERTIFICATION OF DESIGN

Design information on file at Flowserve Corp., 701 First St., Williamsport, PA 17701

Stress analysis report (Class 1 only) on file at Flowserve Corp., 701 First St., Williamsport, PA 17701

Design specifications certified by (1) Francis C. Rosch, Jr.

PE State PA Reg. No. 002855-E

Stress analysis certified by (1) Ronald S. Farrell

PE State PA Reg. No. PE-035216-E

(1) Signature not required. List name only.

CERTIFICATE OF SHOP INSPECTION

I, the undersigned, holding a valid commission issued by the National Board of Boiler and Pressure Vessel Inspectors and the State ~~or Province~~ of Pennsylvania and employed by Commerical Union Ins. Co. of Boston, MA have inspected the pump or valve described in this Data Report on 4-29-99 19 99 and state that to the best of my knowledge and belief, the N Certificate Holder has constructed this pump or valve, in accordance with the ASME Code, Section III.

By signing this certificate, neither the Inspector nor his employer makes any warranty, expressed or implied, concerning the equipment described in this Data Report. Furthermore, neither the Inspector nor his employer shall be liable in any manner for any personal injury or property damage or a loss of any kind arising from or connected with this inspection.

Date 4-29 19 99

[signature] Commissions Pennsylvania 2392

Inspector Charles Young (Nat'l Bd. State, Prov. and No.)

1E51-139

NIS-2/NR-1 OWNER'S REPORT FOR REPAIRS OR REPLACEMENTS

As required by the Provisions of the ASME Code Section XI

PNPP No 9308 Rev. 9/11/00 NQI-1741

1. Owner: FIRSTENERGY CORP. Date 12-20-05
10 Center Road, Perry, Ohio 44081 Sheet 1 of 2

2. Plant: Perry Nuclear Power Plant (PNPP) Unit one
10 Center Road, Perry, Ohio 44081 ORDER 200095847 R/0
(Repair Org. P.O. No., etc.)

3. Work Performed By: FIRSTENERGY Nuclear Operating Company PNPP Type Code Symbol Stamp NR
10 Center Road, Perry, Ohio 44081 Authorization No. 33
Expiration Date 09-26-2008

4. Identification of System: 1E51 RX ISOLATION COOLING SYSTEM

5. (a) Applicable Construction Code: ASME SECTION III CLASS NC (NAME/SECTION/DIVISION/CLASS), 19 74 Edition

WINTER 19 75 Addenda Code Case(s) 1644-5, 1728, N-224, N-241, N-242, N-272, N-275, N-413

(b) Construction Code used for repairs, modifications, or replacements: 1974 (Edition) winter 75 (Addenda) NA (Code Case(s))

(c) ASME Code Section XI applicable for Inservice Inspection: 1889 (Edition) NA (Addenda) NA (Code Case(s))

(d) Applicable Edition of Section XI Utilized for Repairs, Modification, or Replacements:

19 89 , n/a 19 n/a Addenda n/a (Code Case(s))

(e) Design Responsibilities First Energy Nuclear Operating Company PNPP

6. Identification of Components Repaired, Modified, or Replacement Components

Name of Component	Name of Manufacturer	Manufacturer Serial No.	Nat. Board No.	Other ID.	Year Built	Repair, Replacement, or Modification	ASME Code Stamped
PIPING	PULLMAN POWER	1E51	84	N/A	1985	REPLACEMENT	YES

7. Description of Work: REPLACED 6" DIA. DUO CHECK VALVE WITH NEW VALVE S/N 2-11683-01 (1E51F0011)

8. Test Conducted: Hydrostatic- ☐ Pneumatic- ☐ Nominal Operating Pressure- ☒ Other- ☐

Pressure 69 psi Test Temperature 115 degrees F Code Case(s) N/A

NIS-2/NR-1 OWNER'S REPORT FOR REPAIRS OR REPLACEMENTS (Back)

PNPP No. 9308 Rev. 9/11/00 NQI-1741

9. Remarks: N/A

NO NAMEPLATE/STAMPING PERFORMED DUE TO THE INTERFACE CONTROLS OF RA-2370

BEING IN EFFECT AND JURISDICTIONAL AUTHORITY CONCURRENCE HAVING BEEN RECEIVED.

Note: Attach all applicable Manufacturer's Data Reports. Supplemental sheets such as lists, sketches, or drawings may be used, provided (1) size is 8 1/2 in. x 11 in., (2) information in items 1 through 6 of this report is included on each sheet, and (3) each sheet is numbered and the number of sheets is recorded on the front of this form.

CERTIFICATE OF COMPLIANCE

I, John W. Messenger, certify that to the best of my knowledge and belief the statements made in this report are correct and the repair, modification or replacement of the items described above conforms to Section XI of the ASME Code and to the National Board Inspection Code "NR" rules.

National Board Certificate of Authorization No. 33 to use the "NR stamp expires 9-26, 20 08

Date 12/20, 2005 Signed FENOC-PNPP (name of repair organization) (authorized representative) QE (title)

CERTIFICATE OF INSPECTION/INSERVICE INSPECTION

I, Thomas Laps, holding a valid commission issued by The National Board of Boiler and Pressure Vessel Inspectors and certificate of competency issued by the jurisdiction of OHIO and employed by HSB I&I CT. of HARTFORD, CONN. have inspected the repair, modification or replacement described in this report on DEC 21, 20 05 and state that to the best of my knowledge and belief, this repair, modification or replacement has been completed in accordance with Section XI of the ASME Code and the National Board Inspection Code "NR" rules.

By signing this certificate, neither the undersigned nor my employer makes any warranty, expressed or implied, concerning the work described in this report. Furthermore, neither the undersigned nor my employer shall be liable in any manner for any personal injury, property damage or loss of any kind arising from or connected with this inspection.

Date 12/21, 20 05 Signed (inspector) Commissions NB 9330 "N" "I" "A" OHIO COMM. (National Board (include endorsements), and jurisdiction, and no.)

1E51-139 pg 2 of 2

0002 3351 0161

FORM NPV-1 CERTIFICATE HOLDERS' DATA REPORT FOR NUCLEAR PUMPS OR VALVES*
As Required by the Provisions of the ASME Code, Section III, Division 1

Pg. 1 of 1

1. Manufactured and certified by Atwood & Morrill Co., Inc. 285 Canal St., Salem, MA 0197(
(name and address of N Certificate Holder)

2. Manufactured for First Energy Corp., P.O. Box 3611, Akron, OH 44309-3611
(name and address of Purchaser)

3. Location of installation Perry Nuclear Plant, 10 Center Rd., North Perry, OH 44081
(name and address)

4. Model No., Series No., or Type Dual Plate Drawing 11683-01 Rev. 0 CRN N/A

5. ASME Code, Section III, Division 1: 1974 (edition) Winter 1975 (addenda date) 2 (class) N/A (Code Case no.)

6. Pump or valve Valve Nominal inlet size 6 (in.) Outlet size 6 (in.)

7. Material. Body SA216 WCB Bonnet N/A Disk SA487 CA6NM Bolting N/A

(a) Cert. Holder's Serial No.	(b) Nat'l Board No.	(c) Body Serial No.	(d) Bonnet Serial No.	(e) Disk Serial No.
2-11683-01	N/A	HT#: 9994	N/A	HT#: 99105
		S/N: L166		S/N: L167 & L168

* Supplemental information in form of lists, sketches, or drawings may be used provided (1) size is 8½ × 11, (2) information in items 1 through 4 on this Data Report is included on each sheet, (3) each sheet is numbered and the number of sheets is recorded at the top of this form.

(12/88) This form (E00037) may be obtained from the Order Dept., ASME, 22 Law Drive, Box 2300, Fairfield, NJ 07007-2300

RI DB

FORM NPV-1 (Back — Pg. 2 of 2)

Certificate Holder's Serial No. 2-11683-01

8. Design conditions 285 (pressure) psi 100 (temperature) °F or valve pressure class 150 (1)

9. Cold working pressure 285 psi at 100°F

10. Hydrostatic test 450 psi. Disk differential test pressure 325 psi

11. Remarks: Pin Retainer SA479, 410 HT.G3617 TR: 76D

CERTIFICATION OF DESIGN

Design Specification certified by H.R. Peppert P.E. State PA Reg. no. 24928E

Design Report certified by N/A P.E. State N/A Reg. no. N/A

CERTIFICATE OF COMPLIANCE

We certify that the statements made in this report are correct and that this pump or valve conforms to the rules for construction of the ASME Code, Section III, Division 1.

N Certificate of Authorization No. N 2606 Expires 6/13/01

Date 8/5/99 Name Atwood & Morrill Co., Inc. (N Certificate Holder) Signed Brian A. Sullivan (authorized representative)

CERTIFICATE OF INSPECTION

I, the undersigned, holding a valid commission issued by the National Board of Boiler and Pressure Vessel Inspectors and the State or Province of Massachusetts and employed by H.S.B.I.& I. Co. of Hartford, CT have inspected the pump, or valve, described in this Data Report on Aug. 5, 1999, and state that to the best of my knowledge and belief, the Certificate Holder has constructed this pump, or valve, in accordance with the ASME Code, Section III, Division 1.

By signing this certificate, neither the inspector nor his employer makes any warranty, expressed or implied, concerning the component described in this Data Report. Furthermore, neither the inspector nor his employer shall be liable in any manner for any personal injury or property damage or a loss of any kind arising from or connected with this inspection.

Date 8/5/99 Signed [illegible] (Authorized Inspector) Commissions MA-1337 (Nat'l. Bd. (incl. endorsements) and state or prov. and no.)

(1) For manually operated valves only

RI DB

1 E51-140

NIS-2/NR-1 OWNER'S REPORT FOR REPAIRS OR REPLACEMENTS

As required by the Provisions of the ASME Code Section XI

PNPP No. 9308 Rev. 9/11/00 NQI-1741

1. Owner: FIRSTENERGY CORP. Date 5-2-2007
10 Center Road, Perry, Ohio 44081 Sheet 1 of 1

2. Plant: Perry Nuclear Power Plant (PNPP) Unit 1
10 Center Road, Perry, Ohio 44081 200188157
(Repair Org. P.O. No., etc.)

3. Work Performed By: FIRSTENERGY Nuclear Operating Company PNPP Type Code Symbol Stamp NR
10 Center Road, Perry, Ohio 44081 Authorization No. 33
Expiration Date 9-28-08

4. Identification of System: Reactor Core Isolation Cooling System E51

5. (a) Applicable Construction Code: ASME Section III Class 2 - NC ,1974 Edition
NAME/SECTION/DIVISION/CLASS

Winter 1975 Addenda Code Case(s) 1728, 1644-5, N-224, N-241, N-242, N-272, N-275, N-413

(b) Construction Code used for repairs, modifications, or replacements: 1974 (Edition) W75 (Addenda) N/A (Code Case(s))

(c) ASME Code Section XI applicable for Inservice Inspection: 1989 (Edition) N/A (Addenda) N/A (Code Case(s))

(d) Applicable Edition of Section XI Utilized for Repairs, Modification, or Replacements:

1989, N/A 19 N/A Addenda N/A (Code Case(s))

(e) Design Responsibilities FENOC

6. Identification of Components Repaired, Modified, or Replacement Components

Name of Component	Name of Manufacturer	Manufacturer Serial No.	Nat. Board No.	Other ID.	Year Built	Repair, Replacement, or Modification	ASME Code Stamped
Piping System	Pullman Power	1E51	84	1E51D00 02	1985	Replacement	YES

7. Description of Work: Replace rupture disc SN 9909003-1 with new rupture disc SN A10900001

8. Test Conducted: Hydrostatic- ☐ Pneumatic- ☐ Nominal Operating Pressure- ☐ Other- ☐

Pressure NA psi Test Temperature NA degrees F Code Case(s) N/A

NIS-2/NR-1 OWNER'S REPORT FOR REPAIRS OR REPLACEMENTS (Back)

PNPP No. 9308 Rev. 9/11/00 NQI-1741

9. Remarks: _____

Note: Attach all applicable Manufacturer's Data Reports. Supplemental sheets such as lists, sketches, or drawings may be used, provided (1) size is 8 1/2 in. x 11 in., (2) information in items 1 through 6 of this report is included on each sheet, and (3) each sheet is numbered and the number of sheets is recorded on the front of this form.

CERTIFICATE OF COMPLIANCE

I, Russ Matthys, certify that to the best of my knowledge and belief the statements made in this report are correct and the repair, modification or replacement of the items described above conforms to Section XI of the ASME Code and to the National Board Inspection Code "NR" rules.

National Board Certificate of Authorization No. 33 to use the "NR stamp expires 9-28-2008

Date 5-2-2007 Signed FENOC-PNPP (name of repair organization) Russ Matthys (authorized representative) QC Supervisor (title)

CERTIFICATE OF INSPECTION/INSERVICE INSPECTION

I, Thomas G. Laps holding a valid commission issued by The National Board of Boiler and Pressure Vessel Inspectors and certificate of competency issued by the jurisdiction of OHIO and employed by HSB CT. of Hartford, CT. have inspected the repair, modification or replacement described in this report on MAY 2, 2007 and state that to the best of my knowledge and belief, this repair, modification or replacement has been completed in accordance with Section XI of the ASME Code and the National Board Inspection Code "NR" rules.

By signing this certificate, neither the undersigned nor my employer makes any warranty, expressed or implied, concerning the work described in this report. Furthermore, neither the undersigned nor my employer shall be liable in any manner for any personal injury, property damage or loss of any kind arising from or connected with this inspection.

Date 5/2, 2007 Signed Thomas G. Laps (inspector) Commissions NB 9330 "N"I"A" Ohio Comm (National Board (include endorsements), and jurisdiction, and no.)

1E51-141

NIS-2/NR-1 OWNER'S REPORT FOR REPAIRS OR REPLACEMENTS

As required by the Provisions of the ASME Code Section XI

PNPP No. 9308 Rev. 9/11/00 NQI-1741

1. Owner: FIRSTENERGY CORP. Date 5-5-2007
   10 Center Road, Perry, Ohio 44081 Sheet 1 of 1

2. Plant: Perry Nuclear Power Plant (PNPP) Unit 1
   10 Center Road, Perry, Ohio 44081 200062949
   (Repair Org. P.O. No., etc.)

3. Work Performed By: FIRSTENERGY Nuclear Operating Company PNPP Type Code Symbol Stamp NR
   10 Center Road, Perry, Ohio 44081 Authorization No. 33
   Expiration Date 9-28-08

4. Identification of System: Reactor Core Isolation Cooling System E51

5. (a) Applicable Construction Code: ASME Section III Class 1 - NF ,1974 Edition
   NAME/SECTION/DIVISION/CLASS

   Winter 1975 Addenda Code Case(s) 1728, 1644-5, N-224, N-241, N-242, N-272, N-275, N-413

   (b) Construction Code used for repairs, modifications, or replacements: 1974 (Edition) W75 (Addenda) N/A (Code Case(s))

   (c) ASME Code Section XI applicable for Inservice Inspection: 1989 (Edition) N/A (Addenda) N/A (Code Case(s))

   (d) Applicable Edition of Section XI Utilized for Repairs, Modification, or Replacements:

   1989, N/A 19 N/A Addenda N/A (Code Case(s))

   (e) Design Responsibilities FENOC

6. Identification of Components Repaired, Modified, or Replacement Components

Name of Component	Name of Manufacturer	Manufacturer Serial No.	Nat. Board No.	Other ID.	Year Built	Repair, Replacement, or Modification	ASME Code Stamped
Piping System	Pullman Power	1E51	84	1E51H0073	1985	Replacement	YES

7. Description of Work: Replace snubber SN 614001-94 (existing) w/new snubber SN 04616533/011

8. Test Conducted: Hydrostatic- ☐ Pneumatic- ☐ Nominal Operating Pressure- ☐ Other- ☐
   Pressure NA psi Test Temperature NA degrees F Code Case(s) N/A

NIS-2/NR-1 OWNER'S REPORT FOR REPAIRS OR REPLACEMENTS (Back)

PNPP No. 9308 Rev. 9/11/00 NQI-1741

9. Remarks: _____

Note: Attach all applicable Manufacturer's Data Reports. Supplemental sheets such as lists, sketches, or drawings may be used, provided (1) size is 8 1/2 in. x 11 in., (2) information in items 1 through 6 of this report is included on each sheet, and (3) each sheet is numbered and the number of sheets is recorded on the front of this form.

CERTIFICATE OF COMPLIANCE

I, Russ Matthys, certify that to the best of my knowledge and belief the statements made in this report are correct and the repair, modification or replacement of the items described above conforms to Section XI of the ASME Code and to the National Board Inspection Code "NR" rules.

National Board Certificate of Authorization No. 33 to use the "NR stamp expires 9-28-2008

Date 5-5-2007 Signed FENOC-PNPP (name of repair organization) Russ Matthys (authorized representative) QC Supervisor (title)

CERTIFICATE OF INSPECTION/INSERVICE INSPECTION

I, THOMAS G. LAPS holding a valid commission issued by The National Board of Boiler and Pressure Vessel Inspectors and certificate of competency issued by the jurisdiction of OHIO and employed by HSB CT. of Hartford, CT. have inspected the repair, modification or replacement described in this report on May 11, 20 07 and state that to the best of my knowledge and belief, this repair, modification or replacement has been completed in accordance with Section XI of the ASME Code and the National Board Inspection Code "NR" rules.

By signing this certificate, neither the undersigned nor my employer makes any warranty, expressed or implied, concerning the work described in this report. Furthermore, neither the undersigned nor my employer shall be liable in any manner for any personal injury, property damage or loss of any kind arising from or connected with this inspection.

Date 5/11, 20 07 Signed Thomas G. Laps (inspector) Commissions NB9330 " " " " OHIO CONN (National Board (include endorsements), and jurisdiction, and no.)

1E51-142

NIS-2/NR-1 OWNER'S REPORT FOR REPAIRS OR REPLACEMENTS

As required by the Provisions of the ASME Code Section XI

PNPP No. 9308 Rev. 9/11/00 NQI-1741

1. Owner: FIRSTENERGY CORP. Date 5-5-2007
   10 Center Road, Perry, Ohio 44081 Sheet 1 of 1

2. Plant: Perry Nuclear Power Plant (PNPP) Unit 1
   10 Center Road, Perry, Ohio 44081 200062950 (Repair Org. P.O. No., etc.)

3. Work Performed By: FIRSTENERGY Nuclear Operating Company PNPP Type Code Symbol Stamp NR
   10 Center Road, Perry, Ohio 44081 Authorization No. 33
   Expiration Date 9-28-08

4. Identification of System: Reactor Core Isolation Cooling System E51

5. (a) Applicable Construction Code: ASME Section III Class 1 - NF ,1974 Edition
   NAME/SECTION/DIVISION/CLASS
   Winter 1975 Addenda Code Case(s) 1728, 1644-5, N-224, N-241, N-242, N-272, N-275, N-413
   (b) Construction Code used for repairs, modifications, or replacements: 1974 (Edition) W75 (Addenda) N/A (Code Case(s))
   (c) ASME Code Section XI applicable for Inservice Inspection: 1989 (Edition) N/A (Addenda) N/A (Code Case(s))
   (d) Applicable Edition of Section XI Utilized for Repairs, Modification, or Replacements:
   1989, N/A 19 N/A Addenda N/A (Code Case(s))
   (e) Design Responsibilities FENOC

6. Identification of Components Repaired, Modified, or Replacement Components

Name of Component	Name of Manufacturer	Manufacturer Serial No.	Nat. Board No.	Other ID.	Year Built	Repair, Replacement, or Modification	ASME Code Stamped
Piping System	Pullman Power	1E51	84	1E51H0074	1985	Replacement	YES

7. Description of Work: Replace snubber SN 614001/95 (existing) w/new snubber SN 04616533/001

8. Test Conducted: Hydrostatic- ☐ Pneumatic- ☐ Nominal Operating Pressure- ☐ Other- ☐
   Pressure NA psi Test Temperature NA degrees F Code Case(s) N/A

NIS-2/NR-1 OWNER'S REPORT FOR REPAIRS OR REPLACEMENTS (Back)

PNPP No. 9308 Rev. 9/11/00 NQI-1741

9. Remarks: _____

Note: Attach all applicable Manufacturer's Data Reports. Supplemental sheets such as lists, sketches, or drawings may be used, provided (1) size is 8 1/2 in. x 11 in., (2) information in items 1 through 6 of this report is included on each sheet, and (3) each sheet is numbered and the number of sheets is recorded on the front of this form.

CERTIFICATE OF COMPLIANCE

I, Russ Matthys, certify that to the best of my knowledge and belief the statements made in this report are correct and the repair, modification or replacement of the items described above conforms to Section XI of the ASME Code and to the National Board Inspection Code "NR" rules.

National Board Certificate of Authorization No. 33 to use the "NR stamp expires 9-28-2008

Date 5-5-2007 Signed FENOC-PNPP (name of repair organization) Russ Matthys (authorized representative) QC Supervisor (title)

CERTIFICATE OF INSPECTION/INSERVICE INSPECTION

I, THOMAS G. LAPS holding a valid commission issued by The National Board of Boiler and Pressure Vessel Inspectors and certificate of competency issued by the jurisdiction of OHIO and employed by HSB CT. of Hartford, CT. have inspected the repair, modification or replacement described in this report on MAY 10, 20 07 and state that to the best of my knowledge and belief, this repair, modification or replacement has been completed in accordance with Section XI of the ASME Code and the National Board Inspection Code "NR" rules.

By signing this certificate, neither the undersigned nor my employer makes any warranty, expressed or implied, concerning the work described in this report. Furthermore, neither the undersigned nor my employer shall be liable in any manner for any personal injury, property damage or loss of any kind arising from or connected with this inspection.

Date 5/10, 20 07 Signed Thomas G. Laps (inspector) Commissions NB9330 NIA OHIO COMM (National Board (include endorsements), and jurisdiction, and no.)

1E51-143

NIS-2/NR-1 OWNER'S REPORT FOR REPAIRS OR REPLACEMENTS

As required by the Provisions of the ASME Code Section XI

PNPP No. 9308 Rev. 9/11/00 NQI-1741

1. Owner: FIRSTENERGY CORP. Date 5-5-2007
   10 Center Road, Perry, Ohio 44081 Sheet 1 of 1

2. Plant: Perry Nuclear Power Plant (PNPP) Unit 1
   10 Center Road, Perry, Ohio 44081 200062951
   (Repair Org. P.O. No., etc.)

3. Work Performed By: FIRSTENERGY Nuclear Operating Company PNPP Type Code Symbol Stamp NR
   10 Center Road, Perry, Ohio 44081 Authorization No. 33
   Expiration Date 9-28-08

4. Identification of System: Reactor Core Isolation Cooling System E51

5. (a) Applicable Construction Code: ASME Section III Class 2 - NF ,1974 Edition
   NAME/SECTION/DIVISION/CLASS

   Winter 1975 Addenda Code Case(s) 1728, 1644-5, N-224, N-241, N-242, N-272, N-275, N-413

   (b) Construction Code used for repairs, modifications, or replacements: 1974 (Edition) W75 (Addenda) N/A (Code Case(s))

   (c) ASME Code Section XI applicable for Inservice Inspection: 1989 (Edition) N/A (Addenda) N/A (Code Case(s))

   (d) Applicable Edition of Section XI Utilized for Repairs, Modification, or Replacements:

   1989, N/A 19 N/A Addenda N/A (Code Case(s))

   (e) Design Responsibilities FENOC

6. Identification of Components Repaired, Modified, or Replacement Components

Name of Component	Name of Manufacturer	Manufacturer Serial No.	Nat. Board No.	Other ID.	Year Built	Repair, Replacement, or Modification	ASME Code Stamped
Piping System	Pullman Power	1E51	84	1E51H2078	1985	Replacement	YES

7. Description of Work: Replace snubber SN 61319-102 (existing) w/new snubber SN 04616353/013

8. Test Conducted: Hydrostatic- ☐ Pneumatic- ☐ Nominal Operating Pressure- ☐ Other- ☐

   Pressure NA psi Test Temperature NA degrees F Code Case(s) N/A

NIS-2/NR-1 OWNER'S REPORT FOR REPAIRS OR REPLACEMENTS (Back)

PNPP No. 9308 Rev. 9/11/00 NQI-1741

9. Remarks: _____

Note: Attach all applicable Manufacturer's Data Reports. Supplemental sheets such as lists, sketches, or drawings may be used, provided (1) size is 8 1/2 in. x 11 in., (2) information in items 1 through 6 of this report is included on each sheet, and (3) each sheet is numbered and the number of sheets is recorded on the front of this form.

CERTIFICATE OF COMPLIANCE

I, Russ Matthys, certify that to the best of my knowledge and belief the statements made in this report are correct and the repair, modification or replacement of the items described above conforms to Section XI of the ASME Code and to the National Board Inspection Code "NR" rules.

National Board Certificate of Authorization No. 33 to use the "NR stamp expires 9-28-2008

Date 5-5-2007 Signed FENOC-PNPP (name of repair organization) R. Matthys (authorized representative) QC Supervisor (title)

CERTIFICATE OF INSPECTION/INSERVICE INSPECTION

I, THOMAS G. LAPS holding a valid commission issued by The National Board of Boiler and Pressure Vessel Inspectors and certificate of competency issued by the jurisdiction of OHIO and employed by HSB CT. of Hartford, CT. have inspected the repair, modification or replacement described in this report on MAY 10, 20 07 and state that to the best of my knowledge and belief, this repair, modification or replacement has been completed in accordance with Section XI of the ASME Code and the National Board Inspection Code "NR" rules.

By signing this certificate, neither the undersigned nor my employer makes any warranty, expressed or implied, concerning the work described in this report. Furthermore, neither the undersigned nor my employer shall be liable in any manner for any personal injury, property damage or loss of any kind arising from or connected with this inspection.

Date 5/10, 20 07 Signed Thomas G. Laps (inspector) Commissions NB 9330 " " " " OHIO COMM (National Board (include endorsements), and jurisdiction, and no.)

1E51-144

NIS-2/NR-1 OWNER'S REPORT FOR REPAIRS OR REPLACEMENTS

As required by the Provisions of the ASME Code Section XI

PNPP No. 9308 Rev. 9/11/00 NQI-1741

1. Owner: FIRSTENERGY CORP. Date 5/9/07
   10 Center Road, Perry, Ohio 44081 Sheet 1 of 2

2. Plant: Perry Nuclear Power Plant (PNPP) Unit 1
   10 Center Road, Perry, Ohio 44081 200168010 (Repair Org. P.O. No., etc.)

3. Work Performed By: FIRSTENERGY Nuclear Operating Company PNPP Type Code Symbol Stamp NR
   10 Center Road, Perry, Ohio 44081 Authorization No. 33
   Expiration Date 9/28/08

4. Identification of System: Reactor Core Isolation Cooling 1E51

5. (a) Applicable Construction Code: ASME SECTION III CLASS 1 (NAME/SECTION/DIVISION/CLASS), 1974 Edition
   WINTER 19 75 Addenda Code Case(s) N/A

   (b) Construction Code used for repairs, modifications, or replacements: 1974 (Edition) W75 (Addenda) NA (Code Case(s))

   (c) ASME Code Section XI applicable for Inservice Inspection: 1989 (Edition) NONE (Addenda) N/A (Code Case(s))

   (d) Applicable Edition of Section XI Utilized for Repairs, Modification, or Replacements:
   19 89, _____ 19 N/A Addenda N/A (Code Case(s))

   (e) Design Responsibilities First Energy Corp

6. Identification of Components Repaired, Modified, or Replacement Components

Name of Component	Name of Manufacturer	Manufacturer Serial No.	Nat. Board No.	Other ID.	Year Built	Repair, Replacement, or Modification	ASME Code Stamped
Valve	Rockwell	RA-53	824	1E51F066	1982	REPLACEMENT	YES

7. Description of Work: Installed new disc retainer insert assembly s/n 71996-2.

8. Test Conducted: Hydrostatic- ☐ Pneumatic- ☐ Nominal Operating Pressure- ☒ Other- ☐
   Pressure 1032 psi Test Temperature 142 degrees F Code Case(s) N/A

NIS-2/NR-1 OWNER'S REPORT FOR REPAIRS OR REPLACEMENTS (Back)

PNPP No. 9308 Rev. 9/11/00 NQI-1741

9. Remarks:

NO NAMEPLATE/STAMPING PERFORMED DUE TO THE INTERFACE CONTROLS OF RA-2370 BEING IN EFFECT AND JURISDICTIONAL AUTHORITY CONCURRENCE HAVING BEEN RECEIVED.

Note: Attach all applicable Manufacturer's Data Reports. Supplemental sheets such as lists, sketches, or drawings may be used, provided (1) size is 8 1/2 in. x 11 in., (2) information in items 1 through 6 of this report is included on each sheet, and (3) each sheet is numbered and the number of sheets is recorded on the front of this form.

CERTIFICATE OF COMPLIANCE

I, Michael J Tepsick, certify that to the best of my knowledge and belief the statements made in this report are correct and the repair, modification or replacement of the items described above conforms to Section XI of the ASME Code and to the National Board Inspection Code "NR" rules.

National Board Certificate of Authorization No. 33 to use the "NR stamp expires 28 Sept., 20 08

Date 9 may, 20 07 Signed FENOC-PNPP (name of repair organization) (authorized representative) QC Tech. (title)

CERTIFICATE OF INSPECTION/INSERVICE INSPECTION

I, Thomas G Laps, holding a valid commission issued by The National Board of Boiler and Pressure Vessel Inspectors and certificate of competency issued by the jurisdiction of OHIO and employed by HSB CT. of Hartford, Conn. have inspected the repair, modification or replacement described in this report on MAY 9, 20 07 and state that to the best of my knowledge and belief, this repair, modification or replacement has been completed in accordance with Section XI of the ASME Code and the National Board Inspection Code "NR" rules.

By signing this certificate, neither the undersigned nor my employer makes any warranty, expressed or implied, concerning the work described in this report. Furthermore, neither the undersigned nor my employer shall be liable in any manner for any personal injury, property damage or loss of any kind arising from or connected with this inspection.

Date 5/9, 20 07 Signed Thomas G Laps (inspector) Commissions NB 9330 "N" "I" "A" Ohio Comm. (National Board (include endorsements), and jurisdiction, and no.)

IE51 - 1414 SHEET 2c
(AR. 22433)
RNU2316

FORM NPV-1 N CERTIFICATE HOLDERS' DATA REPORT FOR NUCLEAR PUMPS OR VALVES*
As Required by the Provisions of the ASME Code, Section III, Div. 1

1. Manufactured by Rockwell International Corp., 1900 S. Saunders St., Raleigh, NC, 27603
(Name and Address of N Certificate Holder)
2. Manufactured for Cleveland Electric Illuminating Co., PO Box 500, Cleveland Oh, 44101
(Name and Address of Purchaser or Owner)
3. Location of Installation Perry Nuclear Power Plant, Units 1 & 2, North Perry, Ohio
(Name and Address)
4. Pump or Valve Valve. Nominal Inlet Size 6 (inch) Outlet Size 6 (inch)

	(a) Model No., Series No or Type	(b) N Certificate Holder's Serial No.	(c) Canadian Registration No.	(d) Drawing No.	(e) Class	(f) Nat'l. Bd. No.	(g) Year Built
(1)	4094(WCC)JQTY	RA-53	N/A	D82-24401-17	1	824	1982
(2)				Rev. B			
(3)							
(4)							
(5)							
(6)							
(7)							
(8)							
(9)							
(10)							

5. "Active" Butt Weld End Testable Check Valve
(Brief description of service for which equipment was designed)
Heat No. F4743-1 Sales Order 36-24401

6. Design Conditions 1460 (Pressure) psi 574 (Temperature) °F or Valve Pressure Class Spl. Int. 613 (1)
7. Cold Working Pressure 1535 psi at 100°F.
8. Pressure Retaining Pieces

Mark No.	Material Spec. No.	Manufacturer	Remarks
(a) Castings			
F4743	SA-216 Gr. WCC	Quaker Alloy	Body
(b) Forgings			
T-5980	SA-105	Charles E. Larson	Cover
T-5980	SA-105	Charles E. Larson	Test Fitting
10502	SA-105	Charles E. Larson	Disk
39796	SA-638 Gr. 660T2	Charles E. Larson	Gasket Retainer
1G3766	SA-182 Gr. F316L	Charles E. Larson	Indicator Housing

DOCUMENT REVIEWED BY 5547 PNPB CAI/QA

(1) For manually operated valves only.

* Supplemental sheets in form of lists, sketches or drawings may be used provided (1) size is 8-1/2" x 11", (2) information in items 1, 2 and 5 on this Data Report is included on each sheet, and (3) each sheet is numbered and number of sheets is recorded at top of this form.

3

(10/77) This form (E00037) may be obtained from the Order Dept., ASME, 345 E. 47th St., New York, N.Y. 10017

FORM NPV-1 (Back)

Mark No.	Material Spec. No.	Manufacturer	Remarks
(c) Bolting N/A			
(d) Other Parts			
KA7762	SA-106 Gr. B	Capitol Pipe	Equalizer

9. Hydrostatic test 2300 psi. Disk Differential test pressure 1550 psi.

CERTIFICATE OF COMPLIANCE

We certify that the statements made in this report are correct and that this pump, or valve, conforms to the rules of construction of the ASME Code for Nuclear Power Plant Components. Section III, Div. 1., Edition 1974, Addenda Winter 1975 (Date), Code Case No. N/A. Date 11/16/82.

Signed Rockwell International Corp. (N Certificate Holder) by [signature] Manager, Quality Assurance

Our ASME Certificate of Authorization No. 1562 to use the N (N) symbol expires 11/26/85 (Date).

CERTIFICATION OF DESIGN

Design information on file at Rockwell International Corp., Raleigh, NC

Stress analysis report (Class 1 only) on file at Rockwell International Corp., Raleigh, NC

Design specifications certified by (1) Francis C. Rosch, Jr.

PE State Pa. Reg. No. 002855E

Stress analysis certified by (1) T. E. Kunkle

PE State Pa. Reg. No. 016818E

(1) Signature not required. List name only.

CERTIFICATE OF SHOP INSPECTION

I, the undersigned, holding a valid commission issued by the National Board of Boiler and Pressure Vessel Inspectors and the State or Province of North Carolina and employed by HSBI&I Co. of Hartford, Ct. have inspected the pump, or valve, described in this Data Report on Nov 10 1982, and state that to the best of my knowledge and belief, the N Certificate Holder has constructed this pump, or valve, in accordance with the ASME Code, Section III.

By signing this certificate, neither the Inspector nor his employer makes any warranty, expressed or implied, concerning the equipment described in this Data Report. Furthermore, neither the Inspector nor his employer shall be liable in any manner for any personal injury or property damage or a loss of any kind arising from or connected with this inspection.

Date Nov. 16 1982

[signature] (Inspector) Commissions NB8383 NC 919 (Nat'l Bd., State, Prov. and No.)

1E51-145

NIS-2/NR-1 OWNER'S REPORT FOR REPAIRS OR REPLACEMENTS

As required by the Provisions of the ASME Code Section XI

PNPP No. 9308 Rev. 9/11/00 NQI-1741

1. Owner: FIRSTENERGY CORP. Date 5-14-2007
10 Center Road, Perry, Ohio 44081 Sheet 1 of 1

2. Plant: Perry Nuclear Power Plant (PNPP) Unit 1
10 Center Road, Perry, Ohio 44081 200167798
(Repair Org. P.O. No., etc.)

3. Work Performed By: FIRSTENERGY Nuclear Operating Company PNPP Type Code Symbol Stamp NR
10 Center Road, Perry, Ohio 44081 Authorization No. 33
Expiration Date 9-28-08

4. Identification of System: Reactor Core Isolation Cooling System E51

5. (a) Applicable Construction Code: ASME Section III Class 2 - NC ,1974 Edition
NAME/SECTION/DIVISION/CLASS

Winter 1975 Addenda Code Case(s) 1728, 1644-5, N-224, N-241, N-242, N-272, N-275, N-413

(b) Construction Code used for repairs, modifications, or replacements: 1974 (Edition) W75 (Addenda) N/A (Code Case(s))

(c) ASME Code Section XI applicable for Inservice Inspection: 1989 (Edition) N/A (Addenda) N/A (Code Case(s))

(d) Applicable Edition of Section XI Utilized for Repairs, Modification, or Replacements:

1989, N/A 19 N/A Addenda N/A (Code Case(s))

(e) Design Responsibilities FENOC

6. Identification of Components Repaired, Modified, or Replacement Components

Name of Component	Name of Manufacturer	Manufacturer Serial No.	Nat. Board No.	Other ID.	Year Built	Repair, Replacement, or Modification	ASME Code Stamped
Piping System	Pullman Power	1E51	84	1E51D00 01	1985	Replacement	YES

7. Description of Work: Replace rupture disc SN 9909003-1 with new rupture disc SN A10900001

8. Test Conducted: Hydrostatic- ☐ Pneumatic- ☐ Nominal Operating Pressure- ☒ Other- ☐

Pressure 1150 psi Test Temperature 73.4 degrees F Code Case(s) N/A

NIS-2/NR-1 OWNER'S REPORT FOR REPAIRS OR REPLACEMENTS (Back)

PNPP No. 9308 Rev. 9/11/00 NQI-1741

9. Remarks: _____

Note: Attach all applicable Manufacturer's Data Reports. Supplemental sheets such as lists, sketches, or drawings may be used, provided (1) size is 8 1/2 in. x 11 in., (2) information in items 1 through 6 of this report is included on each sheet, and (3) each sheet is numbered and the number of sheets is recorded on the front of this form.

CERTIFICATE OF COMPLIANCE

I, Russ Matthys, certify that to the best of my knowledge and belief the statements made in this report are correct and the repair, modification or replacement of the items described above conforms to Section XI of the ASME Code and to the National Board Inspection Code "NR" rules.

National Board Certificate of Authorization No. 33 to use the "NR stamp expires 9-28-2008

Date 5-14-2007 Signed FENOC-PNPP (name of repair organization) Russ Matthys (authorized representative) QC Supervisor (title)

CERTIFICATE OF INSPECTION/INSERVICE INSPECTION

I, Thomas G. Laps holding a valid commission issued by The National Board of Boiler and Pressure Vessel Inspectors and certificate of competency issued by the jurisdiction of OHIO and employed by HSB CT. of Hartford, CT. have inspected the repair, modification or replacement described in this report on MAY 14, 20 07 and state that to the best of my knowledge and belief, this repair, modification or replacement has been completed in accordance with Section XI of the ASME Code and the National Board Inspection Code "NR" rules.

By signing this certificate, neither the undersigned nor my employer makes any warranty, expressed or implied, concerning the work described in this report. Furthermore, neither the undersigned nor my employer shall be liable in any manner for any personal injury, property damage or loss of any kind arising from or connected with this inspection.

Date 5/14, 20 07 Signed Thomas G. Laps (inspector) Commissions NB 9330 "N"I"A" Ohio Comm (National Board (include endorsements), and jurisdiction, and no.)

1E51-146

NIS-2/NR-1 OWNER'S REPORT FOR REPAIRS OR REPLACEMENTS

As required by the Provisions of the ASME Code Section XI

PNPP No. 9308 Rev. 9/11/00 NQI-1741

1. Owner: FIRSTENERGY CORP. Date 5-14-2007
   10 Center Road, Perry, Ohio 44081 Sheet 1 of 1

2. Plant: Perry Nuclear Power Plant (PNPP) Unit 1
   10 Center Road, Perry, Ohio 44081 200173141
   (Repair Org. P.O. No., etc.)

3. Work Performed By: FIRSTENERGY Nuclear Operating Company PNPP Type Code Symbol Stamp NR
   10 Center Road, Perry, Ohio 44081 Authorization No. 33
   Expiration Date 9-28-08

4. Identification of System: Reactor Core Isolation Cooling System E51

5. (a) Applicable Construction Code: ASME Section III Class 2 - NC ,1974 Edition
   NAME/SECTION/DIVISION/CLASS

   Winter 1975 Addenda Code Case(s) 1728, 1644-5, N-224, N-241, N-242, N-272, N-275, N-413

   (b) Construction Code used for repairs, modifications, or replacements: 1974 (Edition) W75 (Addenda) N/A (Code Case(s))

   (c) ASME Code Section XI applicable for Inservice Inspection: 1989 (Edition) N/A (Addenda) N/A (Code Case(s))

   (d) Applicable Edition of Section XI Utilized for Repairs, Modification, or Replacements:

   1989, N/A 19 N/A Addenda N/A (Code Case(s))

   (e) Design Responsibilities FENOC

6. Identification of Components Repaired, Modified, or Replacement Components

Name of Component	Name of Manufacturer	Manufacturer Serial No.	Nat. Board No.	Other ID.	Year Built	Repair, Replacement, or Modification	ASME Code Stamped
Piping System	Pullman Power	1E51	84	1E51C00 03	1985	Replacement	YES

7. Description of Work: Replace water leg pump SN Q1A021 (existing) with rebuilt pump SN 1A015

8. Test Conducted: Hydrostatic- ☐ Pneumatic- ☐ Nominal Operating Pressure- ☒ Other- ☐

   Pressure 63.8 psi Test Temperature 103.6 degrees F Code Case(s) N/A

NIS-2/NR-1 OWNER'S REPORT FOR REPAIRS OR REPLACEMENTS (Back)

PNPP No. 9308 Rev. 9/11/00 NQI-1741

9. Remarks: _____

Note: Attach all applicable Manufacturer's Data Reports. Supplemental sheets such as lists, sketches, or drawings may be used, provided (1) size is 8 1/2 in. x 11 in., (2) information in items 1 through 6 of this report is included on each sheet, and (3) each sheet is numbered and the number of sheets is recorded on the front of this form.

CERTIFICATE OF COMPLIANCE

I, Russ Matthys, certify that to the best of my knowledge and belief the statements made in this report are correct and the repair, modification or replacement of the items described above conforms to Section XI of the ASME Code and to the National Board Inspection Code "NR" rules.

National Board Certificate of Authorization No. 33 to use the "NR stamp expires 9-28-2008

Date 5-14-2007 Signed FENOC-PNPP (name of repair organization) Russ Matthys (authorized representative) QC Supervisor (title)

CERTIFICATE OF INSPECTION/INSERVICE INSPECTION

I, Jacob C. Scholl holding a valid commission issued by The National Board of Boiler and Pressure Vessel Inspectors and certificate of competency issued by the jurisdiction of OHIO and employed by HSB CT. of Hartford, CT. have inspected the repair, modification or replacement described in this report on 5-14, 20 07 and state that to the best of my knowledge and belief, this repair, modification or replacement has been completed in accordance with Section XI of the ASME Code and the National Board Inspection Code "NR" rules.

By signing this certificate, neither the undersigned nor my employer makes any warranty, expressed or implied, concerning the work described in this report. Furthermore, neither the undersigned nor my employer shall be liable in any manner for any personal injury, property damage or loss of any kind arising from or connected with this inspection.

Date 5-14, 20 07 Signed Jacob C. Scholl (inspector) Commissions NB 7920 "N"I"A"B" Ohio Comm 432 (National Board (include endorsements), and jurisdiction, and no.)

1M51-028

NIS-2/NR-1 OWNER'S REPORT FOR REPAIRS OR REPLACEMENTS

As required by the Provisions of the ASME Code Section XI

PNPP No. 9308 Rev. 9/11/00 NQI-1741

1. Owner: FIRSTENERGY CORP. Date 5-8-07
   10 Center Road, Perry, Ohio 44081 Sheet 1 of 1

2. Plant: Perry Nuclear Power Plant (PNPP) Unit 1
   10 Center Road, Perry, Ohio 44081 200153518 (Repair Org. P.O. No., etc.)

3. Work Performed By: FIRSTENERGY Nuclear Operating Company PNPP Type Code Symbol Stamp NR
   10 Center Road, Perry, Ohio 44081 Authorization No. 33
   Expiration Date 9-28-08

4. Identification of System: Combustible Gas Mixing System 1M51

5. (a) Applicable Construction Code: ASME Section III Class II NC ,1974 Edition
   NAME/SECTION/DIVISION/CLASS

   Winter 1975 Addenda Code Case(s) N272, N-242, N-275, 1644-5, N-413

   (b) Construction Code used for repairs, modifications, or replacements: 1974 (Edition) W75 (Addenda) N/A (Code Case(s))

   (c) ASME Code Section XI applicable for Inservice Inspection: 1989 (Edition) N/A (Addenda) N/A (Code Case(s))

   (d) Applicable Edition of Section XI Utilized for Repairs, Modification, or Replacements:

   19 1989, N/A 19 N/A Addenda N/A (Code Case(s))

   (e) Design Responsibilities FENOC

6. Identification of Components Repaired, Modified, or Replacement Components

Name of Component	Name of Manufacturer	Manufacturer Serial No.	Nat. Board No.	Other ID.	Year Built	Repair, Replacement, or Modification	ASME Code Stamped
Piping System	Pullman Power	1M51	106	1M51F0010B	1985	Replacement	Yes

7. Description of Work: Replaced 36 bonnet nuts heat trace 506C size 5/8-11

8. Test Conducted: Hydrostatic- ☐ Pneumatic- ☐ Nominal Operating Pressure- ☐ Other- ☐
   Pressure N/A psi Test Temperature N/A degrees F Code Case(s) N/A

NIS-2/NR-1 OWNER'S REPORT FOR REPAIRS OR REPLACEMENTS (Back)

PNPP No. 9308 Rev. 9/11/00 NQI-1741

9. Remarks: VT-2 not required Interpretation XI-1-95-52

Note: Attach all applicable Manufacturer's Data Reports. Supplemental sheets such as lists, sketches, or drawings may be used, provided (1) size is 8 1/2 in. x 11 in., (2) information in items 1 through 6 of this report is included on each sheet, and (3) each sheet is numbered and the number of sheets is recorded on the front of this form.

CERTIFICATE OF COMPLIANCE

I, Russ Matthys, certify that to the best of my knowledge and belief the statements made in this report are correct and the repair, modification or replacement of the items described above conforms to Section XI of the ASME Code and to the National Board Inspection Code "NR" rules.

National Board Certificate of Authorization No. 33 to use the "NR stamp expires 9-28-2008

Date 5-8-2007 Signed FENOC-PNPP (name of repair organization) Russ Matthys (authorized representative) QC Supervisor (title)

CERTIFICATE OF INSPECTION/INSERVICE INSPECTION

I, Jacob C. Scholl, holding a valid commission issued by The National Board of Boiler and Pressure Vessel Inspectors and certificate of competency issued by the jurisdiction of OHIO and employed by HSB, Ct. of Hartford CT. have inspected the repair, modification or replacement described in this report on 5-14, 20 07 and state that to the best of my knowledge and belief, this repair, modification or replacement has been completed in accordance with Section XI of the ASME Code and the National Board Inspection Code "NR" rules.

By signing this certificate, neither the undersigned nor my employer makes any warranty, expressed or implied, concerning the work described in this report. Furthermore, neither the undersigned nor my employer shall be liable in any manner for any personal injury, property damage or loss of any kind arising from or connected with this inspection.

Date 5-14, 20 07 Signed Jacob C. Scholl (inspector) Commissions Ohio Comm "432" NB 7920 "N"I"A""B" (National Board (include endorsements), and jurisdiction, and no.)

1N22-D65 Pg 1 of 2

NIS-2/NR-1 OWNER'S REPORT FOR REPAIRS OR REPLACEMENTS

As required by the Provisions of the ASME Code Section XI

PNPP No. 9308 Rev. 9/11/00 NQI-1741

1. Owner: FIRSTENERGY CORP. Date 5-7-07
   10 Center Road, Perry, Ohio 44081 Sheet 1 of 2

2. Plant: Perry Nuclear Power Plant (PNPP) Unit 1
   10 Center Road, Perry, Ohio 44081 200173855
   (Repair Org. P.O. No., etc.)

3. Work Performed By: FIRSTENERGY Nuclear Operating Company PNPP Type Code Symbol Stamp NR
   10 Center Road, Perry, Ohio 44081 Authorization No. 33
   Expiration Date 9-28-2008

4. Identification of System: Main Steam Line and Miscellaneous Drain Lines 1N22

5. (a) Applicable Construction Code: ASME Section III Class 1 NB ,1974 Edition
   NAME/SECTION/DIVISION/CLASS
   Winter 1975 Addenda Code Case(s) N-272 & 1644-5

   (b) Construction Code used for repairs, modifications, or replacements: 1974 (Edition) W/75 (Addenda) N/A (Code Case(s))

   (c) ASME Code Section XI applicable for Inservice Inspection: 1989 (Edition) N/A (Addenda) N/A (Code Case(s))

   (d) Applicable Edition of Section XI Utilized for Repairs, Modification, or Replacements:
   1989 , N/A 19 N/A Addenda N/A (Code Case(s))

   (e) Design Responsibilities FENOC

6. Identification of Components Repaired, Modified, or Replacement Components

Name of Component	Name of Manufacturer	Manufacturer Serial No.	Nat. Board No.	Other ID.	Year Built	Repair, Replacement, or Modification	ASME Code Stamped
Piping System	Pullman Power	1N22	112	1B21F00 16	1985	Replacement	YES

7. Description of Work: replaced gate w/new (SN07X216-2)

8. Test Conducted: Hydrostatic- ☐ Pneumatic- ☐ Nominal Operating Pressure- ☒ Other- ☐
   Pressure 1032 psi Test Temperature 147 degrees F Code Case(s) N/A

NIS-2/NR-1 OWNER'S REPORT FOR REPAIRS OR REPLACEMENTS (Back)

PNPP No. 9308 Rev. 9/11/00 NQI-1741

9. Remarks: Valve installed by Pullman Power and documented on the N-5 for the N22 system

PMT completed per order 200172372.

No nameplate/stamping performed due to the interface controls of RA-2370 being in effect and jurisdictional

Authority concurrence having been received.

Note: Attach all applicable Manufacturer's Data Reports. Supplemental sheets such as lists, sketches, or drawings may be used, provided (1) size is 8 1/2 in. x 11 in., (2) information in items 1 through 6 of this report is included on each sheet, and (3) each sheet is numbered and the number of sheets is recorded on the front of this form.

CERTIFICATE OF COMPLIANCE

I, Russ Matthys, certify that to the best of my knowledge and belief the statements made in this report are correct and the repair, modification or replacement of the items described above conforms to Section XI of the ASME Code and to the National Board Inspection Code "NR" rules.

National Board Certificate of Authorization No. 33 to use the "NR stamp expires 28 September, 2008

Date 5-7-2007 Signed FENOC-PNPP (name of repair organization) Russ Matthys (authorized representative) QC Supervisor (title)

CERTIFICATE OF INSPECTION/INSERVICE INSPECTION

I, Thomas G. Laps, holding a valid commission issued by The National Board of Boiler and Pressure Vessel Inspectors and certificate of competency issued by the jurisdiction of OHIO and employed by HSB CT. of HARTFORD, CT. have inspected the repair, modification or replacement described in this report on MAY 9, 20 07 and state that to the best of my knowledge and belief, this repair, modification or replacement has been completed in accordance with Section XI of the ASME Code and the National Board Inspection Code "NR" rules.

By signing this certificate, neither the undersigned nor my employer makes any warranty, expressed or implied, concerning the work described in this report. Furthermore, neither the undersigned nor my employer shall be liable in any manner for any personal injury, property damage or loss of any kind arising from or connected with this inspection.

Date 5/9, 20 07 Signed Thomas G. Laps (inspector) Commissions NB 9330 'N"I"A" Ohio Comm (National Board (include endorsements), and jurisdiction, and no.)

1 N22-065 Pg 2 of 2

FORM N-2 CERTIFICATE HOLDERS' DATA REPORT FOR IDENTICAL NUCLEAR PARTS AND APPURTENANCES*

As Required by the Provisions of the ASME Code, Section III
Not to Exceed One Day's Production

1. Manufactured and certified by Flowserve Corporation 1900 S. Saunders St. Raleigh, NC (name and address of NPT Certificate Holder)
2. Manufactured for First Energy Corp/Accounts Payable/P.O. Box 6100 Johnstown, PA 15907-6100 (name and address of purchaser)
3. Location of installation Perry Main Warehouse/Perry Nuclear Power Plant/ 10 Center Road, Perry OH 44081 (name and address)
4. Type 81180 R/L (drawing no.) ASME SA216, GR. WCC (mat'l spec. no.) N/A (tensile strength) N/A (CRN) 2007 (year built)
5. ASME Code, Section III, Division 1: 1974 (edition) Winter, 1975 (addenda date) 1 (class) N/A (Code Case no.)
6. Fabricated in accordance with Const. Spec. (Div. 2 only) N/A (no.) Revision N/A Date N/A
7. Remarks: GATE FOR 3" 1500# FW Gate Valve

The material meets ASME Section II, 1974 Edition, Winter 1975 Addenda through 1983 Edition, Summer 1985 Addenda

8. Nom. thickness (in.) N/A Min. design thickness (in.) Per #4 Dia. ID (ft & in.) N/A Length overall (ft & in.) N/A
9. When applicable, Certificate Holders' Data Reports are attached for each item of this report:

Part or Appurtenance Serial Number	National Board No. in Numerical Order	Part or Appurtenance Serial Number	National Board No. in Numerical Order
(1) 07X216-1	N/A	(26)	
(2) 07X216-2	N/A	(27)	
(3) 07X216-3	N/A	(28)	
(4)		(29)	
(5)		(30)	
(6)		(31)	
(7)		(32)	
(8)		(33)	
(9)		(34)	
(10)		(35)	
(11)		(36)	
(12)		(37)	
(13)		(38)	
(14)		(39)	
(15)		(40)	
(16)		(41)	
(17)		(42)	
(18)		(43)	
(19)		(44)	
(20)		(45)	
(21)		(46)	
(22)		(47)	
(23)		(48)	
(24)		(49)	
(25)		(50)	

10. Design pressure _____ psi. Temp. _____ °F. Hydro. test pressure _____ (when applicable) at temp. °F

* Supplemental information in the form of lists, sketches, or drawings may be used provided (1) size is 8½ x 11, (2) information in items 2 and 3 on this Data Report is included on each sheet, (3) each sheet is numbered and the number of sheets is recorded at the top of this form.

(11/05)

FORM N-2 (Back — Pg. 2 of 2)

Certificate Holder's Serial Nos. 07X216-1 through 07X216-3

CERTIFICATION OF DESIGN

Design specifications certified by N/A (when applicable) P.E. State N/A Reg. no. N/A

Design report* certified by N/A (when applicable) P.E. State N/A Reg. no. N/A

CERTIFICATE OF COMPLIANCE

We certify that the statements made in this report are correct and that this (these) Parts conforms to the rules of construction of the ASME Code, Section III, Division 1.

NPT Certificate of Authorization No. N-1563 Expires 11-26-09

Date 3/28/07 Name Flowserve Corporation (NPT Certificate Holder) Signed (authorized representative)

CERTIFICATE OF INSPECTION

I, the undersigned, holding a valid commission issued by the National Board of Boiler and Pressure Vessel Inspectors and the State or Province of NC and employed by HSB CT of Hartford, CT have inspected these items described in this Data Report on 3/28/07, and state that to the best of my knowledge and belief, the Certificate Holder has fabricated these parts or appurtenances in accordance with the ASME Code, Section III, Division 1. Each part listed has been authorized for stamping on the date shown above.

By signing this certificate, neither the inspector nor his employer makes any warranty, expressed or implied, concerning the equipment described in this Data Report. Furthermore, neither the inspector nor his employer shall be liable in any manner for any personal injury or property damage or loss of any kind arising from or connected with this inspection.

Date 3/28/07 Signed (Authorized Nuclear Inspector) Commissions NC*1421 (Nat'l. Bd. (incl. endorsements) and state or prov. and no.)

1N22-066 Pg 1 of 2

NIS-2/NR-1 OWNER'S REPORT FOR REPAIRS OR REPLACEMENTS

As required by the Provisions of the ASME Code Section XI

PNPP No. 9308 Rev. 9/11/00 NQI-1741

1. Owner: FIRSTENERGY CORP. Date 5-7-07
   10 Center Road, Perry, Ohio 44081 Sheet 1 of 2

2. Plant: Perry Nuclear Power Plant (PNPP) Unit 1
   10 Center Road, Perry, Ohio 44081 200011552 (Repair Org. P.O. No., etc.)

3. Work Performed By: FIRSTENERGY Nuclear Operating Company PNPP Type Code Symbol Stamp NR
   10 Center Road, Perry, Ohio 44081 Authorization No. 33
   Expiration Date 9-28-2008

4. Identification of System: Main Steam Line and Miscellaneous Drain Lines- 1N22

5. (a) Applicable Construction Code: ASME Section III Class 1 NB ,1974 Edition
   NAME/SECTION/DIVISION/CLASS

   Winter 1975 Addenda Code Case(s) N-272 & 1644-5

   (b) Construction Code used for repairs, modifications, or replacements: 1974 (Edition) W/75 (Addenda) N/A (Code Case(s))

   (c) ASME Code Section XI applicable for Inservice Inspection: 1989 (Edition) N/A (Addenda) N/A (Code Case(s))

   (d) Applicable Edition of Section XI Utilized for Repairs, Modification, or Replacements:

   1989 , N/A 19 N/A Addenda N/A (Code Case(s))

   (e) Design Responsibilities FENOC

6. Identification of Components Repaired, Modified, or Replacement Components

Name of Component	Name of Manufacturer	Manufacturer Serial No.	Nat. Board No.	Other ID.	Year Built	Repair, Replacement, or Modification	ASME Code Stamped
Piping System	Pullman Power	1N22	112	1B21F0019	1985	Replacement	YES

7. Description of Work: replaced gate w/new (SN07X216-3)

8. Test Conducted: Hydrostatic- ☐ Pneumatic- ☐ Nominal Operating Pressure- ☒ Other- ☐
   Pressure 1032 psi Test Temperature 142 degrees F Code Case(s) N/A

NIS-2/NR-1 OWNER'S REPORT FOR REPAIRS OR REPLACEMENTS (Back)

PNPP No. 9308 Rev 9/11/00 NQI-1741

9. Remarks: Valve installed by Pullman Power and documented on the N-5 for the N22 system

PMT completed per order 200168008.

No nameplate/stamping performed due to the interface controls of RA-2370 being in effect and jurisdictional

Authority concurrence having been received.

Note: Attach all applicable Manufacturer's Data Reports. Supplemental sheets such as lists, sketches, or drawings may be used, provided (1) size is 8 1/2 in. x 11 in., (2) information in items 1 through 6 of this report is included on each sheet, and (3) each sheet is numbered and the number of sheets is recorded on the front of this form.

CERTIFICATE OF COMPLIANCE

I, Russ Matthys, certify that to the best of my knowledge and belief the statements made in this report are correct and the repair, modification or replacement of the items described above conforms to Section XI of the ASME Code and to the National Board Inspection Code "NR" rules.

National Board Certificate of Authorization No. 33 to use the "NR stamp expires 28 September, 2008

Date 5-7-2007 Signed FENOC-PNPP (name of repair organization) Russ Matthys (authorized representative) QC Supervisor (title)

CERTIFICATE OF INSPECTION/INSERVICE INSPECTION

I, Thomas G. Laps, holding a valid commission issued by The National Board of Boiler and Pressure Vessel Inspectors and certificate of competency issued by the jurisdiction of OHIO and employed by HSB CT. of HARTFORD, CT. have inspected the repair, modification or replacement described in this report on May 9, 20 09 and state that to the best of my knowledge and belief, this repair, modification or replacement has been completed in accordance with Section XI of the ASME Code and the National Board Inspection Code "NR" rules.

By signing this certificate, neither the undersigned nor my employer makes any warranty, expressed or implied, concerning the work described in this report. Furthermore, neither the undersigned nor my employer shall be liable in any manner for any personal injury, property damage or loss of any kind arising from or connected with this inspection.

Date 5/9, 20 07 Signed Thomas G Laps (inspector) Commissions NB 9330 'N"I"A" Ohio Comm (National Board (include endorsements), and jurisdiction, and no.)

1N22-066 Pg 2 of 2

FORM N-2 CERTIFICATE HOLDERS' DATA REPORT FOR IDENTICAL NUCLEAR PARTS AND APPURTENANCES*

As Required by the Provisions of the ASME Code, Section III
Not to Exceed One Day's Production

Pg. 1 of 2

1. Manufactured and certified by Flowserve Corporation 1900 S. Saunders St. Raleigh, NC (name and address of NPT Certificate Holder)
2. Manufactured for First Energy Corp/Accounts Payable/P.O. Box 6100 Johnstown, PA 15907-6100 (name and address of purchaser)
3. Location of installation Perry Main Warehouse/Perry Nuclear Power Plant/ 10 Center Road, Perry OH 44081 (name and address)
4. Type 81180 R/L (drawing no.) ASME SA216, GR. WCC (matl. spec. no.) N/A (tensile strength) N/A (CRN) 2007 (year built)
5. ASME Code, Section III, Division 1: 1974 (edition) Winter, 1975 (addenda date) 1 (class) N/A (Code Case no.)
6. Fabricated in accordance with Const. Spec. (Div. 2 only) N/A (no.) Revision N/A Date N/A
7. Remarks: GATE FOR 3" 1500# FW Gate Valve

The material meets ASME Section II, 1974 Edition, Winter 1975 Addenda through 1983 Edition, Summer 1985 Addenda

8. Nom. thickness (in.) N/A Min. design thickness (in.) Per #4 Dia. ID (ft & in.) N/A Length overall (ft & in.) N/A
9. When applicable, Certificate Holders' Data Reports are attached for each item of this report:

Part or Appurtenance Serial Number	National Board No. in Numerical Order	Part or Appurtenance Serial Number	National Board No. in Numerical Order
(1) 07X216-1	N/A	(26)	
(2) 07X216-2	N/A	(27)	
(3) 07X216-3	N/A	(28)	
(4)		(29)	
(5)		(30)	
(6)		(31)	
(7)		(32)	
(8)		(33)	
(9)		(34)	
(10)		(35)	
(11)		(36)	
(12)		(37)	
(13)		(38)	
(14)		(39)	
(15)		(40)	
(16)		(41)	
(17)		(42)	
(18)		(43)	
(19)		(44)	
(20)		(45)	
(21)		(46)	
(22)		(47)	
(23)		(48)	
(24)		(49)	
(25)		(50)	

10. Design pressure _____ psi. Temp. _____ °F. Hydro. test pressure _____ (when applicable) at temp. °F

* Supplemental information in the form of lists, sketches, or drawings may be used provided (1) size is 8½ x 11, (2) information in items 2 and 3 on this Data Report is included on each sheet, (3) each sheet is numbered and the number of sheets is recorded at the top of this form.

(11/05)

FORM N-2 (Back — Pg. 2 of 2)

Certificate Holder's Serial Nos. 07X216-1 through 07X216-3

CERTIFICATION OF DESIGN

Design specifications certified by N/A (when applicable) P.E. State N/A Reg. no. N/A

Design report* certified by N/A (when applicable) P.E. State N/A Reg. no. N/A

CERTIFICATE OF COMPLIANCE

We certify that the statements made in this report are correct and that this (these) Parts conforms to the rules of construction of the ASME Code, Section III, Division 1.

NPT Certificate of Authorization No. N-1563 Expires 11-26-09

Date 3/28/07 Name Flowserve Corporation (NPT Certificate Holder) Signed (authorized representative)

CERTIFICATE OF INSPECTION

I, the undersigned, holding a valid commission issued by the National Board of Boiler and Pressure Vessel Inspectors and the State or Province of NC and employed by HSB CT of Hartford, CT have inspected these items described in this Data Report on 3/28/07, and state that to the best of my knowledge and belief, the Certificate Holder has fabricated these parts or appurtenances in accordance with the ASME Code, Section III, Division 1. Each part listed has been authorized for stamping on the date shown above.

By signing this certificate, neither the inspector nor his employer makes any warranty, expressed or implied, concerning the equipment described in this Data Report. Furthermore, neither the inspector nor his employer shall be liable in any manner for any personal injury or property damage or loss of any kind arising from or connected with this inspection.

Date 3/28/07 Signed (Authorized Nuclear Inspector) Commissions NC*1421 [Nat'l. Bd. (incl. endorsements) and state or prov. and no.]

1 N27-047 Pg 1 of 2

NIS-2/NR-1 OWNER'S REPORT FOR REPAIRS OR REPLACEMENTS

As required by the Provisions of the ASME Code Section XI

PNPP No. 9308 Rev. 9/11/00 NQI-1741

1. Owner: FIRSTENERGY CORP. Date 5-8-07
   10 Center Road, Perry, Ohio 44081 Sheet 1 of 2

2. Plant: Perry Nuclear Power Plant (PNPP) Unit 1
   10 Center Road, Perry, Ohio 44081 200168166 (Repair Org. P.O. No., etc.)

3. Work Performed By: FIRSTENERGY Nuclear Operating Company PNPP Type Code Symbol Stamp NR
   10 Center Road, Perry, Ohio 44081 Authorization No. 33
   Expiration Date 9-28-08

4. Identification of System: 1N27 Feedwater and Feedwater Leakage Control System

5. (a) Applicable Construction Code: ASME Section III - Class 1 NB (NAME/SECTION/DIVISION/CLASS), 1974 Edition

   Winter 19 75 Addenda Code Case(s) None

   (b) Construction Code used for repairs, modifications, or replacements: 1974 (Edition) W/75 (Addenda) N/A (Code Case(s))

   (c) ASME Code Section XI applicable for Inservice Inspection: 1989 (Edition) N/A (Addenda) N/A (Code Case(s))

   (d) Applicable Edition of Section XI Utilized for Repairs, Modification, or Replacements:

   19 89, N/A 19 N/A Addenda N/A (Code Case(s))

   (e) Design Responsibilities FENOC

6. Identification of Components Repaired, Modified, or Replacement Components

Name of Component	Name of Manufacturer	Manufacturer Serial No.	Nat. Board No.	Other ID.	Year Built	Repair, Replacement, or Modification	ASME Code Stamped
Valve	Rockwell International Corp.	PZ42	663	!N27 F559B	1981	Replacement	YES

7. Description of Work: Remove tect connection from valve for inspection and reinstall using filler material HT 47758

8. Test Conducted: Hydrostatic- ☐ Pneumatic- ☐ Nominal Operating Pressure- ☒ Other- ☐

   Pressure 1041 psi Test Temperature 156 degrees F Code Case(s) N416-2

NIS-2/NR-1 OWNER'S REPORT FOR REPAIRS OR REPLACEMENTS (Back)

PNPP No. 9308 Rev. 9/11/00 NQI-1741

9. Remarks: NONE

NO NAMEPLATE/STAMPING PERFORMED DUE TO THE INTERFACE CONTROLS OF RA-2370 BEING IN EFFECT AND JURISDICTIONAL AUTHORITY CONCURRENCE HAVING BEEN RECEIVED.

Note: Attach all applicable Manufacturer's Data Reports. Supplemental sheets such as lists, sketches, or drawings may be used, provided (1) size is 8 1/2 in. x 11 in., (2) information in items 1 through 6 of this report is included on each sheet, and (3) each sheet is numbered and the number of sheets is recorded on the front of this form.

CERTIFICATE OF COMPLIANCE

I, Russ Matthys, certify that to the best of my knowledge and belief the statements made in this report are correct and the repair, modification or replacement of the items described above conforms to Section XI of the ASME Code and to the National Board Inspection Code "NR" rules.

National Board Certificate of Authorization No. 33 to use the "NR stamp expires 28 SEPT , 2008

Date 5-8-2007 Signed FENOC-PNPP (name of repair organization) Russ Matthys (authorized representative) QC Supervisor (title)

CERTIFICATE OF INSPECTION/INSERVICE INSPECTION

I, Thomas G. Laps, holding a valid commission issued by The National Board of Boiler and Pressure Vessel Inspectors and certificate of competency issued by the jurisdiction of OHIO and employed by HARTFORD STEAM BOILER CT. of HARTFORD, CT have inspected the repair, modification or replacement described in this report on MAY 12, 20 07 and state that to the best of my knowledge and belief, this repair, modification or replacement has been completed in accordance with Section XI of the ASME Code and the National Board Inspection Code "NR" rules.

By signing this certificate, neither the undersigned nor my employer makes any warranty, expressed or implied, concerning the work described in this report. Furthermore, neither the undersigned nor my employer shall be liable in any manner for any personal injury, property damage or loss of any kind arising from or connected with this inspection.

Date 5/12, 20 07 Signed Thomas G. Laps (inspector) Commissions NB 9330 "N"I"A" Ohio Comm. (National Board (include endorsements), and jurisdiction, and no.)

FORM NPV-1 N CERTIFICATE HOLDERS' DATA REPORT FOR NUCLEAR PUMPS OR VALVES*

As Required by the Provisions of the ASME Code, Section III, Div. 1

1. Manufactured by Rockwell International Corp., 1900 S. Saunders, St., Raleigh, NC 27603
(Name and Address of N Certificate Holder)

2. Manufactured for Cleveland Electric Ill. Company, P.O. Box 500, Cleveland, Ohio 44101
(Name and Address of Purchaser or Owner)

3. Location of Installation Perry Nuclear Power Plant, Units 1 & 2, North Perry, Ohio
(Name and Address)

4. Pump or Valve Valve, Nominal Inlet Size 20 (inch) Outlet Size 20 (inch)

	(a) Model No., Series No. or Type	(b) N Certificate Holder's Serial No.	(c) Canadian Registration No.	(d) Drawing No.	(e) Class	(f) Nat'l. Bd. No.	(g) Year Built
(1)	7592(WCC)	P7-42	N/A	D-81-24401-01 Rev. B	1	663	1981
(2)	JNQTY						
(3)							
(4)							
(5)							
(6)							
(7)							
(8)							
(9)							
(10)							

1N27-047 Pg 2 of 2

5. Controlled Closure Check Valve
(Brief description of service for which equipment was designed)
Heat No. 3810415-117 Rockwell S.O. 36-24401

6. Design Conditions 1510 (Pressure) psi 420 (Temperature) °F or Valve Pressure Class N/A (1)

7. Cold Working Pressure 2250 psi at 100°F.

8. Pressure Retaining Pieces

Mark No.	Material Spec. No.	Manufacturer	Remarks
(a) Castings			
3810415	SA 216 Gr. WCC	Rockwell Int'l (Metal Casting Div.)	Body
(b) Forgings			
116447	SA 105	Charles E. Larson	Cover
220528	SA 105	Cann & Saul Steel Company	Disk
36996	SA 638 Gr. 660 T2	Charles E. Larson	Gasket Retainer
126376	SA 105	Charles E. Larson	Drain Cap
116792	SA 105	Charles E. Larson	Test Fitting

(1) For manually operated valves only.

* Supplemental sheets in form of lists, sketches or drawings may be used provided (1) size is 8-1/2" x 11", (2) information in items 1, 2 and 5 on this Data Report is included on each sheet, and (3) each sheet is numbered and number of sheets is recorded at top of this form.

(10/77) This form (E00037) may be obtained from the Order Dept., ASME, 345 E. 47th St., New York, N.Y. 10017

FORM NPV-1 (Back)

Mark No.	Material Spec. No.	Manufacturer	Remarks
(c) Bolting			
N/A			
(d) Other Parts			
L23469	SA 106 Gr. B	Capital Pipe & Steel Products	Equalizer
L05505	SA 106 Gr. B	Capital Pipe & Steel Products	Drain Nipple

9. Hydrostatic test 3375 psi. Disk Differential test pressure 2250 psi.

CERTIFICATE OF COMPLIANCE

We certify that the statements made in this report are correct and that this pump, or valve, conforms to the rules of construction of the ASME Code for Nuclear Power Plant Components, Section III, Div. 1, Edition 1974, Addenda Winter 1975 (Date), Code Case No. N/A, Date 12-30-81

Signed Rockwell International Corp. (N Certificate Holder) by [signature] Manager, Quality Assurance 12/30/81

Our ASME Certificate of Authorization No. N-1562 to use the N (N) symbol expires 11/26/82 (Date).

CERTIFICATION OF DESIGN

Design information on file at Rockwell International Corp., Raleigh, NC 27603

Stress analysis report (Class 1 only) on file at Rockwell International Corp., Raleigh, NC 27603

Design specifications certified by (1) Milton G. Carlotis

PE State PA Reg. No. 028303-E

Stress analysis certified by (1) R. J. Clapper

PE State NC Reg. No. 10057

(1) Signature not required. List name only.

CERTIFICATE OF SHOP INSPECTION

I, the undersigned, holding a valid commission issued by the National Board of Boiler and Pressure Vessel Inspectors and the State or Province of North Carolina and employed by HSBI & I Co. of Hartford, CT have inspected the pump, or valve, described in this Data Report on Dec 10, 19 81, and state that to the best of my knowledge and belief, the N Certificate Holder has constructed this pump, or valve, in accordance with the ASME Code, Section III.

By signing this certificate, neither the Inspector nor his employer makes any warranty, expressed or implied, concerning the equipment described in this Data Report. Furthermore, neither the Inspector nor his employer shall be liable in any manner for any personal injury or property damage or a loss of any kind arising from or connected with this inspection.

Date Dec 30, 19 81. [signature] Commissions NB8383 NC919 (Nat'l Bd., State, Prov. and No.)

25x

1N27-048

NIS-2/NR-1 OWNER'S REPORT FOR REPAIRS OR REPLACEMENTS

As required by the Provisions of the ASME Code Section XI

PNPP No. 9308 Rev. 9/11/00 NQI-1741

1. Owner: FIRSTENERGY CORP. Date 5-12-07
   10 Center Road, Perry, Ohio 44081 Sheet 1 of 1

2. Plant: Perry Nuclear Power Plant (PNPP) Unit 1
   10 Center Road, Perry, Ohio 44081 200168165 (Repair Org. P.O. No., etc.)

3. Work Performed By: FIRSTENERGY Nuclear Operating Company PNPP Type Code Symbol Stamp NR
   10 Center Road, Perry, Ohio 44081 Authorization No. 33
   Expiration Date 9-28-08

4. Identification of System: 1N27 Feedwater and Feedwater Leakage Control System

5. (a) Applicable Construction Code: ASME Section III - Class 1 NB (NAME/SECTION/DIVISION/CLASS), 1974 Edition

   Winter 19 75 Addenda Code Case(s) None

   (b) Construction Code used for repairs, modifications, or replacements: 1974 (Edition) W/75 (Addenda) N/A (Code Case(s))

   (c) ASME Code Section XI applicable for Inservice Inspection: 1989 (Edition) N/A (Addenda) N/A (Code Case(s))

   (d) Applicable Edition of Section XI Utilized for Repairs, Modification, or Replacements:

   19 89, N/A 19 N/A Addenda N/A (Code Case(s))

   (e) Design Responsibilities FENOC

6. Identification of Components Repaired, Modified, or Replacement Components

Name of Component	Name of Manufacturer	Manufacturer Serial No.	Nat. Board No.	Other ID.	Year Built	Repair, Replacement, or Modification	ASME Code Stamped
Valve	Rockwell International Corp.	PZ83	662	!N27 F559A	1981	Replacement	YES

7. Description of Work: Remove tect connection from valve for inspection and reinstall using 1 ¾ inch round Stock HT 14512

8. Test Conducted: Hydrostatic- ☐ Pneumatic- ☐ Nominal Operating Pressure- ☒ Other- ☐

   Pressure 1041 psi Test Temperature 156 degrees F Code Case(s) N416-2

NIS-2/NR-1 OWNER'S REPORT FOR REPAIRS OR REPLACEMENTS (Back)

PNPP No. 9308 Rev. 9/11/00 NQI-1741

9. Remarks: NONE

NO NAMEPLATE/STAMPING PERFORMED DUE TO THE INTERFACE CONTROLS OF RA-2370 BEING IN EFFECT AND JURISDICTIONAL AUTHORITY CONCURRENCE HAVING BEEN RECEIVED.

Note: Attach all applicable Manufacturer's Data Reports. Supplemental sheets such as lists, sketches, or drawings may be used, provided (1) size is 8 1/2 in. x 11 in., (2) information in items 1 through 6 of this report is included on each sheet, and (3) each sheet is numbered and the number of sheets is recorded on the front of this form.

CERTIFICATE OF COMPLIANCE

I, Russ Matthys, certify that to the best of my knowledge and belief the statements made in this report are correct and the repair, modification or replacement of the items described above conforms to Section XI of the ASME Code and to the National Board Inspection Code "NR" rules.

National Board Certificate of Authorization No. 33 to use the "NR stamp expires 28 SEPT , 2008

Date 5-12-2007 Signed FENOC-PNPP (name of repair organization) Russ Matthys (authorized representative) QC Supervisor (title)

CERTIFICATE OF INSPECTION/INSERVICE INSPECTION

I, Thomas G. Laps, holding a valid commission issued by The National Board of Boiler and Pressure Vessel Inspectors and certificate of competency issued by the jurisdiction of OHIO and employed by HARTFORD STEAM BOILER CT. of HARTFORD, CT have inspected the repair, modification or replacement described in this report on MAY 14, 20 07 and state that to the best of my knowledge and belief, this repair, modification or replacement has been completed in accordance with Section XI of the ASME Code and the National Board Inspection Code "NR" rules.

By signing this certificate, neither the undersigned nor my employer makes any warranty, expressed or implied, concerning the work described in this report. Furthermore, neither the undersigned nor my employer shall be liable in any manner for any personal injury, property damage or loss of any kind arising from or connected with this inspection.

Date 5/14, 20 07 Signed Thomas G Laps (inspector) Commissions NB 9330 "N"I"A" Ohio Comm. (National Board (include endorsements), and jurisdiction, and no.)

1P11-009 Pg 1 of 2

NIS-2/NR-1 OWNER'S REPORT FOR REPAIRS OR REPLACEMENTS

As required by the Provisions of the ASME Code Section XI

PNPP No. 9308 Rev. 9/11/00 NQI-1741

1. Owner: FIRSTENERGY CORP. Date 5-2-2007
   10 Center Road, Perry, Ohio 44081 Sheet 1 of 2

2. Plant: Perry Nuclear Power Plant (PNPP) Unit 1
   10 Center Road, Perry, Ohio 44081 200173853
   (Repair Org. P.O. No., etc.)

3. Work Performed By: FIRSTENERGY Nuclear Operating Company PNPP Type Code Symbol Stamp NR
   10 Center Road, Perry, Ohio 44081 Authorization No. 33
   Expiration Date 9-28-08

4. Identification of System: Condensate Transfer and Storage System P11

5. (a) Applicable Construction Code: ASME Section III Class 2 - NC ,1974 Edition
   NAME/SECTION/DIVISION/CLASS

   Winter 1975 Addenda Code Case(s) 1644-5, N-272, N-275, N-413

   (b) Construction Code used for repairs, modifications, or replacements: 1974 (Edition) W75 (Addenda) N/A (Code Case(s))

   (c) ASME Code Section XI applicable for Inservice Inspection: 1989 (Edition) N/A (Addenda) N/A (Code Case(s))

   (d) Applicable Edition of Section XI Utilized for Repairs, Modification, or Replacements:

   1989, N/A 19 N/A Addenda N/A (Code Case(s))

   (e) Design Responsibilities FENOC

6. Identification of Components Repaired, Modified, or Replacement Components

Name of Component	Name of Manufacturer	Manufacturer Serial No.	Nat. Board No	Other ID.	Year Built	Repair, Replacement, or Modification	ASME Code Stamped
Piping System	Pullman Power	1P11	107	1P11F0060	1985	Replacement	YES

7. Description of Work: Replace valve SN 1-53236-A and install w/new studs HT 7806 and nuts HT Z214

8. Test Conducted: Hydrostatic- ☐ Pneumatic- ☐ Nominal Operating Pressure- ☒ Other- ☐

   Pressure 157 psi Test Temperature NOT degrees F Code Case(s) N/A

NIS-2/NR-1 OWNER'S REPORT FOR REPAIRS OR REPLACEMENTS (Back)

PNPP No. 9308 Rev 9/11/00 NQI-1741

9. Remarks: Retest (VT-2) performed by Order 200173853

Note: Attach all applicable Manufacturer's Data Reports. Supplemental sheets such as lists, sketches, or drawings may be used, provided (1) size is 8 1/2 in. x 11 in., (2) information in items 1 through 6 of this report is included on each sheet, and (3) each sheet is numbered and the number of sheets is recorded on the front of this form.

CERTIFICATE OF COMPLIANCE

I, Russ Matthys, certify that to the best of my knowledge and belief the statements made in this report are correct and the repair, modification or replacement of the items described above conforms to Section XI of the ASME Code and to the National Board Inspection Code "NR" rules.

National Board Certificate of Authorization No. 33 to use the "NR stamp expires 9-28-2008

Date 5-2-2007 Signed FENOC-PNPP (name of repair organization) Russ Matthys (authorized representative) QC Supervisor (title)

CERTIFICATE OF INSPECTION/INSERVICE INSPECTION

I, Thomas G. Laps holding a valid commission issued by The National Board of Boiler and Pressure Vessel Inspectors and certificate of competency issued by the jurisdiction of OHIO and employed by HSB CT. of Hartford, CT. have inspected the repair, modification or replacement described in this report on May 3, 20 07 and state that to the best of my knowledge and belief, this repair, modification or replacement has been completed in accordance with Section XI of the ASME Code and the National Board Inspection Code "NR" rules.

By signing this certificate, neither the undersigned nor my employer makes any warranty, expressed or implied, concerning the work described in this report. Furthermore, neither the undersigned nor my employer shall be liable in any manner for any personal injury, property damage or loss of any kind arising from or connected with this inspection.

Date 5/3, 20 07 Signed Thomas G Laps (inspector) Commissions NB 9330 "N"I"A" Ohio Comm (National Board (include endorsements), and jurisdiction, and no.)

1 P11-009 Pg 2 of 2

FORM NPV-1 CERTIFICATE HOLDERS DATA REPORT FOR NUCLEAR PUMPS OR VALVES*
As Required by the Provisions of the ASME Code, Section III, Division 1

1. Manufactured and certified by: Weir Valves and Controls USA Inc., 285 Canal St., Salem, MA 01970
(name and address of N Certificate Holder)

2. Manufactured for First Energy Corporation, 10 Center Rd., P.O. Box 97, North Perry, OH 44081
(name and address of Purchaser)

3. Location of installation Perry Nuclear Power Plant, 10 Center Road, Dock No. 1, North Perry OH 44081
(name and address)

4. Model No., Series No., or Type TCBV Drawing 53236-A Rev. 02 CRN N/A

5. ASME Code, Section III, Division 1: 1974 (edition) Winter 1975 (addenda date) 2 (class) 1635-1 (Code Case no.)

6. Pump or Valve Valve Nominal inlet size 12 (in.) Outlet size 12 (in.)

7. Material: Body SA351-CF8M Bonnet SA240-316 Disk SA351-CF8M Bolting see remarks

(a) Cert. Holder's Serial No.	(b) Nat'l Board No.	(c) Body Serial No.	(d) Bonnet Serial No.	(e) Disk Serial No.
1-53236-A	N/A	HT. #:06262 S/N. #: Y578	HT. #:0AD7 SN. #: 1	HT. #: 06251 S/N. #: Y579

* Supplemental information in form of lists, sketches, or drawings may be used provided (1) size 8 ½ x 11, (2) information in items 1 through 4 on this Data Report is included on each sheet, (3) each sheet is numbered and the number of sheets is recorded at the top of this form

(12/88) This form (E00037) may be obtained from the Order Dept., ASME, 22 Law Drive, Box 2300, Fairfield, NJ 07007-2300.

FORM NPV-1 (Back -- Pg. 2 of 2)

Certificate Holder' s Serial No. 1-53236-A

8. Design conditions Body 275 psi 100 °F or valve pressure class 150 (1)
Disc 160 psi 220
(pressure) (temperature)

9. Cold working pressure 275 psi at 100°F

10. Hydrostatic test 425 psi. Disk differential test pressure 180 psi

11. Remarks: HEX CAP SCREWS SA193 GR B8M CL1, HT#: 151788 TR#: 136C

CERTIFICATION OF DESIGN

Design specification certified by Richard D. Stadel (when applicable) P.E. State Michigan Reg. No. 6201027244

Design report certified by N/A (when applicable) P.E. State N/A Reg. no. N/A

CERTIFICATE OF COMPLIANCE

We certify that the statements made in this report are correct and that pump or valve conforms to the rules for construction of the ASME Code, Section III, Division 1.

N Certificate of Authorization No. N-2606 Expires 6-13-07

Date 3/30/07 Name WEIR VALVES & CONTROLS USA INC. (N Certificate Holder) Signed (authorized representative)

CERTIFICATE OF INSPECTION

I, the undersigned, holding a valid commission issued by the National Board of Boiler and Pressure Vessel Inspectors and the State or Province of Massachusetts and employed by HSBCT of Hartford, CT have inspected the pump, or valve, described in this Data Report on 3/30/07, and state that to the best of my knowledge and belief, the Certificate Holder has constructed this pump, or valve, in accordance with the ASME Code, Section III, Division 1.

By signing this Certificate, neither the inspector nor his employer makes any warranty, expressed or implied, concerning the equipment described in this Data Report. Furthermore, neither the inspector nor his employer shall be liable in any manner for any personal injury or property damage or loss of any kind arising from or connected with this inspection.

Date 3/30/07 Signed (Authorized Inspector) Commission MA1651 A, B, N, I (Nat'l. Bd. (incl. endorsements) and state or prov. and no)

(1) For manually operated valves only.

1P11-010

NIS-2/NR-1 OWNER'S REPORT FOR REPAIRS OR REPLACEMENTS

As required by the Provisions of the ASME Code Section XI

PNPP No. 9308 Rev 9/11/00 NQI-1741

1. Owner: FIRSTENERGY CORP. Date 5-11-2007
10 Center Road, Perry, Ohio 44081 Sheet 1 of 1

2. Plant: Perry Nuclear Power Plant (PNPP) Unit 1
10 Center Road, Perry, Ohio 44081 200259739
(Repair Org. P.O. No., etc.)

3. Work Performed By: FIRSTENERGY Nuclear Operating Company PNPP Type Code Symbol Stamp NR
10 Center Road, Perry, Ohio 44081 Authorization No. 33
Expiration Date 9-28-08

4. Identification of System: Condensate Transfer and Storage System P11

5. (a) Applicable Construction Code: ASME Section III Class 2 - NC ,1974 Edition
NAME/SECTION/DIVISION/CLASS

Winter 1975 Addenda Code Case(s) 1644-5, N-272, N-275, N-413

(b) Construction Code used for repairs, modifications, or replacements: 1974 (Edition) W75 (Addenda) N/A (Code Case(s))

(c) ASME Code Section XI applicable for Inservice Inspection: 1989 (Edition) N/A (Addenda) N/A (Code Case(s))

(d) Applicable Edition of Section XI Utilized for Repairs, Modification, or Replacements:

1989, N/A 19 N/A Addenda N/A (Code Case(s))

(e) Design Responsibilities FENOC

6. Identification of Components Repaired, Modified, or Replacement Components

Name of Component	Name of Manufacturer	Manufacturer Serial No.	Nat. Board No.	Other ID.	Year Built	Repair, Replacement, or Modification	ASME Code Stamped
Piping System	Pullman Power	1P11	107	1P11F05 45	1985	Replacement	YES

7. Description of Work: Install new valve wafer disk/pin HT # D4844/15079 – also installed new mounting studs HT 52852-DE and nuts HT 714684

8. Test Conducted: Hydrostatic- ☐ Pneumatic- ☐ Nominal Operating Pressure- ☒ Other- ☐

Pressure 152 psi Test Temperature 104 degrees F Code Case(s) N/A

NIS-2/NR-1 OWNER'S REPORT FOR REPAIRS OR REPLACEMENTS (Back)

PNPP No. 9308 Rev. 9/11/00 NQI-1741

9. Remarks: _____

Note: Attach all applicable Manufacturer's Data Reports. Supplemental sheets such as lists, sketches, or drawings may be used, provided (1) size is 8 1/2 in. x 11 in., (2) information in items 1 through 6 of this report is included on each sheet, and (3) each sheet is numbered and the number of sheets is recorded on the front of this form.

CERTIFICATE OF COMPLIANCE

I, Russ Matthys, certify that to the best of my knowledge and belief the statements made in this report are correct and the repair, modification or replacement of the items described above conforms to Section XI of the ASME Code and to the National Board Inspection Code "NR" rules.

National Board Certificate of Authorization No. 33 to use the "NR stamp expires 9-28-2008

Date 5-11-2007 Signed FENOC-PNPP (*name of repair organization*) Russ Matthys (*authorized representative*) QC Supervisor (*title*)

CERTIFICATE OF INSPECTION/INSERVICE INSPECTION

I, Thomas G. Laps holding a valid commission issued by The National Board of Boiler and Pressure Vessel Inspectors and certificate of competency issued by the jurisdiction of OHIO and employed by HSB CT. of Hartford, CT. have inspected the repair, modification or replacement described in this report on MAY 11, 20 07 and state that to the best of my knowledge and belief, this repair, modification or replacement has been completed in accordance with Section XI of the ASME Code and the National Board Inspection Code "NR" rules.

By signing this certificate, neither the undersigned nor my employer makes any warranty, expressed or implied, concerning the work described in this report. Furthermore, neither the undersigned nor my employer shall be liable in any manner for any personal injury, property damage or loss of any kind arising from or connected with this inspection.

Date 5/11, 20 07 Signed Thomas G. Laps (*inspector*) Commissions NB 9330 "N"I"A" Ohio Comm (*National Board (include endorsements), and jurisdiction, and no.*)

1P43-018

NIS-2/NR-1 OWNER'S REPORT FOR REPAIRS OR REPLACEMENTS

As required by the Provisions of the ASME Code Section XI

PNPP No. 9308 Rev. 9/11/00 NQI-1741

1. Owner: FIRSTENERGY CORP. Date 8/3/05
   10 Center Road, Perry, Ohio 44081 Sheet 1 of 2

2. Plant: Perry Nuclear Power Plant (PNPP) Unit one
   10 Center Road, Perry, Ohio 44081 01-12834-000
   (Repair Org. P.O. No., etc.)

3. Work Performed By: FIRSTENERGY Nuclear Operating Company PNPP Type Code Symbol Stamp NR
   10 Center Road, Perry, Ohio 44081 Authorization No. 33
   Expiration Date 9/26/2005

4. Identification of System: 1P43 Nuclear Closed Cooling

5. (a) Applicable Construction Code: ASME Section III NC ,1974 Edition
   NAME/SECTION/DIVISION/CLASS

   Winter 19 75 Addenda Code Case(s) N/A

   (b) Construction Code used for repairs, modifications, or replacements: 1974 (Edition) Winter 75 (Addenda) n/a (Code Case(s))

   (c) ASME Code Section XI applicable for Inservice Inspection: 1989 (Edition) N/A (Addenda) n/a (Code Case(s))

   (d) Applicable Edition of Section XI Utilized for Repairs, Modification, or Replacements:
   19 89 , N/A 19 N/A Addenda n/a (Code Case(s))

   (e) Design Responsibilities FIRSTENERGY Nuclear Oprerating Company PNPP

6. Identification of Components Repaired, Modified, or Replacement Components

Name of Component	Name of Manufacturer	Manufacturer Serial No.	Nat. Board No.	Other ID.	Year Built	Repair, Replacement, or Modification	ASME Code Stamped
Valve	Contromatics	84509-26-3	N/A	1P43 F355	1977	Replacement	Yes

7. Description of Work: Rebuilt valve using (8) 1/4-20 cap screws HT#726438, shaft/disc assembly HT#TSI, studs 7/8-9 four of HT code 81, two of heat code 2, and three of heat # 8991565 continued in remarks.

8. Test Conducted: Hydrostatic- ☐ Pneumatic- ☐ Nominal Operating Pressure- ☐ Other- ☐
   Pressure N/A psi Test Temperature N/A degrees F Code Case(s) N/A

NIS-2/NR-1 OWNER'S REPORT FOR REPAIRS OR REPLACEMENTS (Back)

PNPP No. 9308 Rev. 9/11/00 NQI-1741

9. Remarks: Reference CR 03-06248 and CR 03-06252

NO NAMEPLATE/STAMPING PERFORMED DUE TO THE INTERFACE CONTROLS OF RA-2370

BEING IN EFFECT AND JURISDICTIONAL AUTHORITY CONCURRENCE HAVING BEEN RECEIVED.

Note: *Attach all applicable Manufacturer's Data Reports. Supplemental sheets such as lists, sketches, or drawings may be used, provided (1) size is 8 1/2 in. x 11 in., (2) information in items 1 through 6 of this report is included on each sheet, and (3) each sheet is numbered and the number of sheets is recorded on the front of this form.*

CERTIFICATE OF COMPLIANCE

I, Michael J Tepsick, certify that to the best of my knowledge and belief the statements made in this report are correct and the repair, modification or replacement of the items described above conforms to Section XI of the ASME Code and to the National Board Inspection Code "NR" rules.

National Board Certificate of Authorization No. 33 to use the "NR stamp expires 26 Sept., 20 05

Date Aug. 3, 20 05 Signed FENOC-PNPP (*name of repair organization*) [signature] (*authorized representative*) QC Tech. (*title*)

CERTIFICATE OF INSPECTION/INSERVICE INSPECTION

I, Thomas G Laps, holding a valid commission issued by The National Board of Boiler and Pressure Vessel Inspectors and certificate of competency issued by the jurisdiction of OHIO and employed by HSB CT. of Hartford, Conn. have inspected the repair, modification or replacement described in this report on SEPT. 15, 20 05 and state that to the best of my knowledge and belief, this repair, modification or replacement has been completed in accordance with Section XI of the ASME Code and the National Board Inspection Code "NR" rules.

By signing this certificate, neither the undersigned nor my employer makes any warranty, expressed or implied, concerning the work described in this report. Furthermore, neither the undersigned nor my employer shall be liable in any manner for any personal injury, property damage or loss of any kind arising from or connected with this inspection.

Date 9/15, 20 05 Signed Thomas G Laps (*inspector*) Commissions NB 9330 "N" "I" "A" Ohio Comm. (*National Board (include endorsements), and jurisdiction, and no.*)

IP43-018 PAGE 2 OF 2

"CORRECTED REPORT" S.O. NP84509, Item #26
P.O. P-1191-K, Item #RNN-12

FORM NPV-1 MANUFACTURERS' DATA REPORT FOR NUCLEAR PUMPS OR VALVES*
(As Required by the Provisions of the ASME Code, Section III, Div. 1)

1. Manufactured by Contromatics Div., 222 Roberts St., E. Hartford, Ct. 06108
(Name and Address of Manufacturer)
2. Manufactured for Cleveland Elec. Illum. Co., Illuminating Bldg., Public Sq., Cleveland, Ohio 44101
(Name and Address of Purchaser or Owner)
3. Location of Installation Perry Nuc. Pwr. Plts., Units 1&2, Near Painesville, Ohio
(Name and Address)
4. Pump or Valve Butterfly Valve Nominal Inlet Size 10 (inch) Outlet Size 10

	(a) Model No., Series No. or Type	(b) Manufacturers' Serial No.	(c) Canadian Registration No.	(d) Drawing No.	(e) Class	(f) Nat'l. Bd. No.	(g) Year Built
(1)	CW-2566-BB	84509-26-3	N/A	2498-10-26A	2	N/A	1977
(3)							
(4)							
(5)							
(6)							
(7)							
(8)							
(9)							
(10)							

5. Demineralized Water (Active)
(Brief description of service for which equipment was designed)

6. Design Conditions 150 (Pressure) psi 150 (Temperature) °F or Valve Pressure Class N/A (1)
7. Cold Working Pressure 275 psi at 100°F.
8. Pressure Retaining Pieces

Mark No.	Material Spec. No.	Manufacturer	Remarks
(a) Castings			CORRECTION: Line 8d: Add Ht #2209 for Body.
(b) Forgings			

DOCUMENT REVIEWED BY 4088

(1) For manually operated valves only.

* Supplemental sheets in form of lists, sketches or drawings may be used provided (1) size is 8-1/2" x 11", (2) information in items 1, 2 and 5 on this data report is included on each sheet, and (3) each sheet is numbered and number of sheets is recorded at top of this form.

(1/76) This form (E00037) may be obtained from the Order Dept., ASME, 345 E. 47 St., New York, N.Y. 10017

FORM NPV-1 (Back)

Mark No.	Material Spec. No.	Manufacturer	Remarks
(c) Bolting			
Studs	ASME-SA-193	IBA Co. and Universal-Cyclops	
Ht #G8983	Gr. B8		
Bolts	ASME-SA-193	IBA Co. and Jones & Laughlin	
Ht #48238	Gr. B8		
Nuts	ASME-SA-194	IBA Co. and Allegheny-Ludlam	
Ht #87047	Gr. 8		
(d) Other Parts			
Body(Plate)	ASME-SA-516	Nippon Kokan K.K.	
Ht #2209	Gr. 70	Fukuyama Works	
Roll #RL094-1			
Disc(Plate)	ASME-SA-516	Kaiser Steel	
Ht #53204(2-1)	Gr. 70		
Retainer	ASME-SA-516	Stahlwerke Peine-Salzgitter AG	
Ht #82914	Gr. 70		
Roll #7226-4			

DOCUMENT REVIEWED BY QUALITY ASSURANCE

9. Hydrostatic test 425 psi.

CERTIFICATE OF COMPLIANCE

We certify that the statements made in this report are correct and that this pump, or valve, conforms to the rules of construction of the ASME Code for Nuclear Power Plant Components, Section III, Div. I., Edition 1974, Addenda Winter 1974 (Date), Code Case No. N/A, Date 4-11-78

Signed Contromatics Division (Manufacturer) By R. Schwanda, Asst. Q.C. Mgr.)

Our ASME Certificate of Authorization No. N-885 to use the N (N) (NPV) symbol expires 9/9/77 (Date).

CERTIFICATION OF DESIGN

Design information on file at Contromatics Division

Stress analysis report (Class 1 only) on file at

Design specifications certified by (1) Hiram R. Reppert

PE State Pa. Reg. No. 24298-E

Stress analysis certified by (1)

PE State Reg. No.

(1) Signature not required. List name only.

CERTIFICATE OF SHOP INSPECTION

I, the undersigned, holding a valid commission issued by the National Board of Boiler and Pressure Vessel Inspectors and the State or Province of Connecticut and employed by Lumbermens Mutual Co. of North Quincy, Mass. have inspected the pump, or valve, described in this Data Report on 4-11 19 78 and state that to the best of my knowledge and belief, the Manufacturer has constructed this pump, or valve, in accordance with the ASME Code, Section III.

By signing this certificate, neither the Inspector nor his employer makes any warranty, expressed or implied, concerning the equipment described in this Data Report. Furthermore, neither the Inspector nor his employer shall be liable in any manner for any personal injury or property damage or a loss of any kind arising from or connected with this inspection.

Date 4-11 19 78

Inspector Commissions CT 528/01410 (Nat'l Bd., State, Prov. and No.)

1P54-009

NIS-2/NR-1 OWNER'S REPORT FOR REPAIRS OR REPLACEMENTS

As required by the Provisions of the ASME Code Section XI

PNPP No. 9308 Rev. 9/11/00 NQI-1741

1. Owner: FIRSTENERGY CORP. Date 5/19/07
10 Center Road, Perry, Ohio 44081 Sheet 1 of 2

2. Plant: Perry Nuclear Power Plant (PNPP) Unit ONE
10 Center Road, Perry, Ohio 44081 ORDER 200173873
(Repair Org. P.O. No., etc.)

3. Work Performed By: FIRSTENERGY Nuclear Operating Company PNPP Type Code Symbol Stamp NR
10 Center Road, Perry, Ohio 44081 Authorization No. 33
Expiration Date 9-28-08

4. Identification of System: 1P54 FIRE PROTECTION

5. (a) Applicable Construction Code: ASME SECTION III NC ,1974 Edition
NAME/SECTION/DIVISION/CLASS

WINTER 19 75 Addenda Code Case(s) N-242-1,N-272,N-224,N-413,1644-5

(b) Construction Code used for repairs, modifications, or replacements: 1974 (Edition) WINTER 75 (Addenda) * (Code Case(s))

(c) ASME Code Section XI applicable for Inservice Inspection: 1989 (Edition) N/A (Addenda) N/A (Code Case(s))

(d) Applicable Edition of Section XI Utilized for Repairs, Modification, or Replacements:

19 89 , EDITION 19 N/A Addenda N/A
Code Case(s)

(e) Design Responsibilities FIRSTENERGY NUCLEAR OPERATING COMPANY PNPP

6. Identification of Components Repaired, Modified, or Replacement Components

Name of Component	Name of Manufacturer	Manufacturer Serial No.	Nat. Board No.	Other ID.	Year Built	Repair, Replacement, or Modification	ASME Code Stamped
PIPING SYSTEM	PULLMAN POWER	1P-54	76	NA	1985	REPLACEMENT	YES

7. Description of Work: REPLACED CHECK VALVE CV1B-0430 WITH NEW CHECK VALVE

SN- N99934-00-0001. Item is 1P54F1098. [illegible] 7/9/07 TGL 7/9/07

8. Test Conducted: Hydrostatic- ☐ Pneumatic- ☐ Nominal Operating Pressure- ☒ Other- ☐

Pressure 8.2 psi Test Temperature 72.5 degrees F Code Case(s) N/A

NIS-2/NR-1 OWNER'S REPORT FOR REPAIRS OR REPLACEMENTS (Back)

PNPP No. 9308 Rev. 9/11/00 NQI-1741

9. Remarks: N/A

NO NAMEPLATE/STAMPING PERFORMED DUE TO THE INTERFACE CONTROLS OF RA-2370 BEING IN EFFECT AND JURISDICTIONAL AUTHORITY CONCURRENCE HAVING BEEN RECEIVED.

Note: Attach all applicable Manufacturer's Data Reports. Supplemental sheets such as lists, sketches, or drawings may be used, provided (1) size is 8 1/2 in. x 11 in., (2) information in items 1 through 6 of this report is included on each sheet, and (3) each sheet is numbered and the number of sheets is recorded on the front of this form.

CERTIFICATE OF COMPLIANCE

I, JOHN W. MESSENGER, certify that to the best of my knowledge and belief the statements made in this report are correct and the repair, modification or replacement of the items described above conforms to Section XI of the ASME Code and to the National Board Inspection Code "NR" rules.

National Board Certificate of Authorization No. 33 to use the "NR stamp expires Sept 28, 20 08

Date 5/19/ 2007 Signed FENOC-PNPP (name of repair organization) (authorized representative) QE (title)

CERTIFICATE OF INSPECTION/INSERVICE INSPECTION

I, JACOB C. SCHOLL, holding a valid commission issued by The National Board of Boiler and Pressure Vessel Inspectors and certificate of competency issued by the jurisdiction of OHIO and employed by HSB-CT of HARTFORD, CT have inspected the repair, modification or replacement described in this report on 5-21, 20 07 and state that to the best of my knowledge and belief, this repair, modification or replacement has been completed in accordance with Section XI of the ASME Code and the National Board Inspection Code "NR" rules.

By signing this certificate, neither the undersigned nor my employer makes any warranty, expressed or implied, concerning the work described in this report. Furthermore, neither the undersigned nor my employer shall be liable in any manner for any personal injury, property damage or loss of any kind arising from or connected with this inspection.

Date 5-21, 20 07 Signed (inspector) Commissions NB7920 ANBI-OH 432 (National Board (include endorsements), and jurisdiction, and no.)

IP54-009 pg 2 of 2

Q.C.-398, Rev. B
Form NPV-1

FORM NPV-1 CERTIFICATE HOLDERS' DATA REPORT FOR NUCLEAR PUMPS OR VALVES*

As Required by the Provisions of the ASME Code, Section III, Division 1

1. Manufactured and certified by Anderson Greenwood Crosby, 43 Kendrick St., Wrentham, MA 02093
   (name and address of N Certificate Holder)
2. Manufactured for FIRST ENERGY CORP.
   (name and address of Purchaser)
3. Location of installation PERRY, OH
   (name and address)
4. Model No., Series No., or Type CV1B-0430-SSB-N Drawing DS-C99934 Rev. B CRN N/A
5. ASME Code, Section III, Division 1: 1974 (edition) W'75 (addenda date) 2 (class) N/A (Code Case no.)
6. Pump or valve VALVE Nominal inlet size 4 (in.) Outlet size 4 (in.)
7. Material:
   (a) valve Body SA182 GR.F316 Bonnet Disk SA479 GR.F316 Bolting
   (b) pump Casting Cover Bolting

(a) Cert. Holder's Serial No.	(b) Nat'l Board No.	(c) Body/Casing Serial No.	(d) Bonnet/Cover Serial No.	(e) Disk Serial No.
N99934-00-0001		BODY	N900406-31-0001	
		DISC	N900408-31-0001	
		HINGE PIN BUSHING	N900416-31-0002	
		HINGE PIN BUSHING	N900416-31-0001	
		HEX HEAD CAPSCREW	N98354-34-0005	
		SLOTTED NUT	N97860-33-0007	

* Supplemental information in form of lists, sketches, or drawings may be used provided (1) size is 8-1/2 X 11, (2) information in items 1 through 4 on this Data Report is included on each sheet, (3) each sheet is numbered and the number of sheets is recorded at the top of this form.

This form (E00037) may be obtained from the Order Dept., ASME, 22 Law Drive, Box 2300, Fairfield, NJ 07007-2300.

P.1

Form NPV-1

Q.C.-398, Rev. B
Side 2

FORM NPV-1 (Back -- Pg. 2 of 2)

Certificate Holder's Serial No. N99934-00-0001

8. Design conditions 500 psi (pressure) 0 (temperature) ° F of valve pressure class ANSI CL 300

9. Cold working pressure 720 psi at 100°F

10. Hydrostatic test 1125 psi. Disk differential test pressure N/A psi

11. Remarks:

CERTIFICATE OF DESIGN

Design Specification certified by WALTER C. FLENSBURG P.E State OH Reg No. 49729
Design Report certified by N/A P.E. State Reg. No.

CERTIFICATE OF COMPLIANCE

We certify that the statements made in this report are correct and that this pump or valve conforms to the rules for construction of the ASME Code, Section III, Division 1.
N Certificate of Authorization No. N-1876 Expires 30 SEPTEMBER 2007

Date 4-JAN-07 Name ANDERSON GREENWOOD/CROSBY (N Certificate Holder) Signed D.E. Tue (authorized representative)

CERTIFICATE OF INSPECTION

I, the undersigned, holding a valid commission issued by the National Board of Boiler and Pressure Vessel Inspectors and the State or Province of Massachusetts and employed by HSB-CT of HARTFORD, CT have inspected the pump, or valve, described in this Data Report on 12-20-2006, and state that to the best of my knowledge and belief, the Certificate Holder has constructed this pump, or valve, in accordance with the ASME Code, Section III, Division 1.

By signing this certificate, neither the inspector nor his employer makes any warranty, expressed or implied, concerning the component described in this Data Report. Furthermore, neither the inspector nor his employer shall be liable in any manner for any personal injury or property damage or a loss of any kind arising from or connected with this inspection.

Date JAN 4, '07 Signed (Authorized Inspector) Commissions MA-1420 A,N,I,S (Nat'l. Bd. (incl. Endorsements) and state or prov. and no.)

1.2