Omaha Public Power District

444 South 16th Street Mall
Omaha NE 68102-2247

LIC-07-0043
July 31, 2007

U.S. Nuclear Regulatory Commission
Attn: Document Control Desk
Washington, DC 20555-0001

References:
1. Docket No. 50-285
2. Letter from NRC (W. Reckley) to Entergy (C. G. Anderson) dated October 29, 2001, "Arkansas Nuclear One, Unit No. 1 – Issuance of Amendment RE: The Conversion to Improved Standard Technical Specifications" (ML013050554)

SUBJECT: Fort Calhoun Station, Unit No. 1, License Amendment Request, "Addition of Swing Inverters to 120-Volt Alternating Current Instrument Buses"

Pursuant to 10 CFR 50.90, the Omaha Public Power District (OPPD) is submitting a request for an amendment to the Fort Calhoun Station (FCS), Unit No. 1 Operating License No. DPR-40. The proposed amendment makes changes to the FCS Technical Specifications (TS) to support a planned inverter modification to be installed during the 2008 refueling outage.

The inverter modification will require revisions to TS 2.7(1), 2.7(2), and 3.7(5) and the associated Bases sections to allow for the addition of two (2) safety related swing inverters. Precedent for this revision to the FCS TS is Amendment No. 215 for Arkansas Nuclear One, Unit No. 1 (Reference 2), which also utilizes swing inverters on its 120 volt alternating current instrument buses.

The Enclosure provides OPPD's evaluation of the proposed amendment including a description of the proposed changes and confirmation of applicability. Attachment 1 provides the existing TS pages marked-up to show the proposed changes. Attachment 2 provides the proposed TS pages. Attachments 3 and 4 provide sketches of the existing and new inverter configurations, respectively.

OPPD requests NRC approval by February 1, 2008, with implementation prior to startup from the 2008 refueling outage.

A001

NRR

There are no regulatory commitments in this letter.

In accordance with 10 CFR 50.91, a copy of this application, with attachments, is being provided to the designated State of Nebraska Official.

If you should have any questions regarding this submittal, or need additional information, please contact Mr. Thomas C. Matthews at (402) 533-6938.

I declare under penalty of perjury that the foregoing is true and correct. (Executed on July 31, 2007.)

David J. Bannister
Acting Site Director

DJB/DLL/dll

Enclosure: Omaha Public Power District's Evaluation for Amendment of Operating License

c: B. S. Mallett, NRC Regional Administrator, Region IV
A. B. Wang, NRC Project Manager
L. M. Willoughby, NRC Senior Resident Inspector
Director of Consumer Health Services, Department of Regulation and Licensure, Nebraska Health and Human Services, State of Nebraska

Omaha Public Power District's Evaluation
for
Amendment of Operating License

ATTACHMENTS:

1. Markups of Technical Specifications Pages
2. Proposed Technical Specifications Pages (Retyped)
3. Sketch of Existing Inverter Configuration
4. Sketch of New Inverter Configuration for Modification EC 31369

1.0 SUMMARY DESCRIPTION

This letter is a request to amend Operating License No. DPR-40 for Fort Calhoun Station (FCS), Unit No. 1. This proposal includes a change in electrical design, and associated Technical Specification (TS) changes.

FCS modification/engineering change (EC) 31369 will add two swing inverters to the 120-volt alternating current (a-c) instrument buses, as well as replace the four currently installed safety related inverters and the two non-safety related inverters installed on direct current (d-c) buses 1 and 2. Installation of an additional safety related swing inverter on each d-c bus allows one of the other safety related inverters on the bus to be taken offline for maintenance or repair. Changes to the TSs are required to take advantage of the additional operational flexibility the swing inverters will provide.

The proposed change revises TS 2.7(1), 2.7(2), and 3.7(5) to allow for the addition of two safety related swing inverters being installed at FCS. The proposed revisions are similar to those approved for Arkansas Nuclear One, Unit No. 1 (ANO-1) during the ANO-1 conversion to Standard Technical Specifications (Reference 6.1). As shown in Limiting Condition for Operation (LCO) 3.8.7 of the ANO-1 Technical Specifications, ANO-1 also utilizes swing inverters to back up non-swing inverters energizing the 120-volt a-c buses.

2.0 DETAILED DESCRIPTION

In order to support the inverter modification EC 31369, which replaces the existing inverters and adds two safety related swing inverters to the 120 V a-c buses, the following TS changes are proposed:

1. TS 2.7(1)j is revised to require two inverters on d-c bus No. 1 and two inverters on d-c bus No. 2 to be operable in the following combinations:

   <u>125 V d-c Bus No. 1</u>

   Inverter A and inverter C; or inverter A and associated swing inverter; or inverter C and associated swing inverter; AND

   <u>125 V d-c Bus No. 2</u>

   Inverter B and inverter D; or inverter B and associated swing inverter; or inverter D and associated swing inverter.

2. TS 2.7(2)o is revised to indicate that one of the required inverters may be inoperable for up to twenty-four hours provided the reactor protective system and engineered safeguards systems instrument channels supplied by the remaining three required inverters are all operable and the 120 V a-c instrument bus associated with the inoperable inverter is powered from its associated inverter bypass source.

3. TS 3.7(5) is revised to replace the heading of "Inverters A, B, C, and D" with "Required Safety Related Inverters."

4. In TS 2.7, the word "operability" is misspelled, the word "on" should be "of," and there are various spacing inconsistencies throughout the text; these errors are corrected in this License Amendment Request (LAR).

The TS Bases changes, which are included in the attached markups and "clean" pages, will be processed in accordance with the FCS TS Bases Change (TSBC) control program. These Bases changes are included for information only purposes and are as follows:

1. The Basis of TS 2.7 is revised to describe the relationship of the swing inverters with the associated non-swing inverters. The Basis is also revised to explain that required inverters are inverters from those combinations required to achieve operability in accordance with TS 2.7(1)j. Finally, the Basis is revised to specify that there is no limit on the time allowed to restore a safety related inverter(s) if at least four of the inverters in the combinations required by TS 2.7(1)j are operable and supplying the associated instrument bus loads. The revisions to TS Basis 2.7, page 5 will result in information being shifted to the subsequent TS pages.

2. The Basis of TS 3.7 is revised to describe surveillance of the required safety related inverters, which requires weekly verification that the inverters are functioning properly and that the 120 V a-c buses are energized from the inverter.

The proposed changes ensure that the electrical systems minimum requirements support station operation in accordance with TS 2.7. The current TS requirement to have four (4) operable inverters is not altered by this LAR.

3.0 TECHNICAL EVALUATION

The safety related inverters are the preferred source of power for the 120 V a-c buses because of the stability and reliability achieved. The inverters provide an uninterruptible power source for the safety significant instrumentation and controls, including the reactor protection and engineered safety features systems.

The a-c instrument system is comprised of six separate buses, four of which supply power to safety related instrumentation. Each instrument bus is supplied by a separate solid-state inverter from the d-c system. As shown in the attached sketch of the existing inverter configuration (Attachment 3), instrument buses A, C, and 1 are supplied from d-c

bus 1, and instrument buses B, D, and 2 are supplied from d-c bus 2. The instrument buses provide annunciation in the main control room upon detection of low bus voltage.

Safety related inverters A, B, C, and D are rated 7.5 KVA at 120 volts nominal, single phase. Non-safety related inverters 1 and 2 are rated 10 KVA at 120 volts nominal, single phase. Each inverter has its own annunciator point in the control room, which is actuated when the inverter is in an off-normal condition.

Instrument buses A and C, supplied from d-c bus 1, have a manual bus tie for use only when an inverter is out of service for maintenance. Instrument buses B and D, supplied from d-c bus 2, are similarly arranged. Each of the instrument inverters, which supply power to the instrument buses, also has a 480 volt a-c bypass source that supplies power to the bus if there is an inverter failure or if inverter maintenance is necessary. In the event of inverter failure, the load on the inverter is automatically transferred to the bypass source.

Each inverter supplying the instrument buses operates in synchronism with the auxiliary power system to avoid the beat frequencies that can occur in an asynchronous system. This also provides bumpless transfer to and from the bypass source. Each inverter reverts to an internal frequency reference when the system reference synchronization voltage source is lost. (Reference 6.2)

Modification EC 31369:

The proposed amendment to the FCS TS is necessary to take advantage of the operational flexibility that modification EC 31369 (Reference 6.3) will provide. Modification EC 31369 replaces all existing inverters on the two d-c buses and installs one additional safety related inverter on each bus. These additional inverters will be termed "swing" inverters because they will substitute for the non-swing safety related inverters as needed (see attached new inverter configuration sketch in Attachment 4). Overall, the modification will install six safety related inverters and two non-safety related inverters.

The replacement inverters will have similar KVA ratings and design features (such as input and output breakers, automatic static switches, and manual transfer switches to align the inverter to the bypass source) as the existing inverters. All replacement inverters will utilize existing transformers as the bypass sources. The safety related swing inverters will have the same KVA rating as the non-swing safety related inverters and will have transformers for use as the bypass source.

Additional features in the design of the replacement inverters accommodate switching between safety related swing inverters and the associated safety related non-swing inverters. The design maintains existing alternate shutdown panels, vital controls and indications, and power sources in the event of a fire in the control room.

Administrative controls are in place to ensure that the existing station battery capacity is not degraded and to ensure battery margin is adequately maintained as a result of the inverter modification.

D-C Bus No. 1:

The safety related non-swing inverters A (EE-8H) and C (EE-8K) will each be provided with an additional manual transfer switch to allow for transfer of the affected inverter instrument bus to the safety related swing inverter (EE-8T) in case of inverter failure or maintenance activities that require the inverter to be out of service.

Inverter C (EE-8K) will be provided with an additional output breaker that will be used to feed the auxiliary feedwater panel AI-179.

The safety related swing inverter EE-8T will be provided with a three-mode selector switch that allows for aligning and synchronizing the swing inverter to its bypass source or to either inverter A (EE-8H) or C (EE-8K). Additionally, swing inverter EE-8T will be provided with three output breakers for power feed to inverters A (EE-8H) and C (EE-8K), and panel AI-179.

A safety related "make-before-break" wall mounted manual transfer switch (43/EE-8K/T) will be provided to allow for instrument power feed from either inverter C (EE-8K) or swing inverter EE-8T to panel AI-179.

D-C Bus No. 2:

The safety related non-swing inverters B (EE-8J) and D (EE-8L) will each be provided with an additional manual transfer switch to allow for transfer of the affected inverter instrument bus to the safety related swing inverter (EE-8U) in case of inverter failure or maintenance activities that require the inverter to be out of service.

Inverter D (EE-8L) will be provided with an additional output breaker that will be used to feed auxiliary feedwater panel AI-179, alternate shutdown panel AI-185, and auxiliary feedwater actuation panel AI-199.

The safety related swing inverter EE-8U will be provided with a three-mode selector switch that allows for aligning and synchronizing the swing inverter to its bypass source or to either inverter B (EE-8J) or D (EE-8L). Additionally, swing inverter EE-8U will be provided with three output breakers for power feed to inverters B (EE-8J) and D (EE-8L), and panels AI-179, AI-185, and AI-199.

A safety related "make-before-break" wall mounted manual transfer switch (43/EE-8L/U) will be provided to allow for instrument power feed from either inverter D (EE-8L) or swing inverter EE-8U to panels AI-179, AI-185, and AI-199.

Technical Specifications:

Currently, TS 2.7(1) has no provision for the safety related swing inverters. The changes proposed for TS 2.7(1)j clarify acceptable combinations of swing and non-swing inverters to ensure operability of the instrument buses. The change to TS 2.7(1)j takes advantage of the operational flexibility gained by the addition of the two swing inverters but does not reduce the requirement to have a total of four inverters operable. Placement of a swing inverter into service maintains the requirement for independence and redundancy between buses. The change requires two inverters on each d-c bus to be operable and specifies the appropriate combinations of inverters that make the instrument buses operable.

The change to TS 2.7(2)o allows one of the four required inverters to be inoperable for up to twenty-four hours. The reactor protective and engineered safeguards systems instrument channels supplied by the three remaining required inverters must be operable and the 120 volt a-c instrument bus associated with the inoperable inverter must be powered from its bypass source. An inverter is required if it is one from the combination of inverters used to satisfy TS 2.7(1)j.

Although continued operation for up to twenty-four hours with one of the required inverters inoperable is allowed, the addition of the two safety related swing inverters is expected to decrease the amount of time that the station must operate with less than four inverters. This is because the design allows the inoperable inverter to be replaced by its associated swing (or non-swing) inverter. Reducing the need to shut the station down due to an inoperable inverter also reduces the risk associated with mode transition to shutdown.

Use of the term "required" is necessary because the change to TS 2.7(1)j allows operability to be achieved with various combinations of inverters. The term "required" is also needed to distinguish the fact that an out-of-service inverter may be inoperable indefinitely with no effect on TS 2.7(1)j operability. This change does not decrease either the number of inverters required to be operable or their ability to supply the instrument buses. In most cases, the swing inverters will reduce the time that the station must remain in TS 2.7(2)o due to the added redundancy and operational flexibility. This configuration allows preventative maintenance, repair, and testing to take place online, which improves resource availability during refueling outages.

The word "operability" is misspelled in TS 2.7(2)c. and is being corrected in this LAR. Also, in TS 2.7(3), the word "on" should be "of" in the title and is being corrected in this LAR. In addition to these typographical corrections, there are spacing inconsistencies that are being corrected throughout the text in TS 2.7 as well. These changes are administrative editorial corrections being made to the TS.

The title of TS 3.7(5) is revised to pertain to the safety related inverters. This change does not alter the requirement to monitor the output parameters (voltage, frequency, and bus alignment) of all required safety related inverters on a weekly basis. However, weekly surveillance testing of out-of-service inverters will not be performed. Voltage, frequency, and bus alignment of an out-of-service inverter will be verified prior to declaring it operable and placing it in-service.

The TS Bases changes, which are included in the attached markup and "clean" pages, will be processed in accordance with the OPPD TSBC control program. These Bases changes are included for information only purposes and are as follows:

The changes to the Basis of TS 2.7 provide additional description of the relationship of the non-swing inverters with the swing inverters. The Basis also explains that required inverters are inverters from those combinations required to achieve operability in accordance with TS 2.7(1)j. As many as two inverters may be inoperable for an indefinite amount of time if at least four inverters are operable and supplying the associated instrument bus loads in accordance with the requirements of TS 2.7(1)j.

The Basis of TS 3.7 is revised to provide additional detail describing surveillance of the required safety related inverters. The surveillance requires weekly verification of voltage, frequency and bus alignment to assure operability.

The proposed revisions ensure that the instrument buses support station operation per TS 2.7 since the requirement to have four operable inverters is unchanged.

4.0 REGULATORY SAFETY EVALUATION

4.1 Applicable Regulatory Requirements/Criteria

FCS was licensed for construction prior to May 21, 1971, and at that time committed to the draft General Design Criteria (GDC). The draft GDC are contained in Appendix G of the FCS USAR and are similar to 10 CFR 50 Appendix A, *General Design Criteria for Nuclear Power Plants*. The draft GDC that govern emergency power are Criterion 24 and Criterion 39 from USAR Appendix G.

Criterion 24 – *Emergency Power for Protection Systems* states:

> In the event of loss of all offsite power, sufficient alternate sources of power shall be provided to permit the required functioning of the protection systems.

This criterion is met. Emergency power is available from two completely independent diesel generator (DG) sets and from two completely independent 125 volt d-c systems for essential d-c loads.

The independent diesel generator supply systems are located in the plant and are connected to separate buses. Both generator sets independently start automatically upon loss of auxiliary power and are ready to accept load within 10 seconds of loss of normal supply power. Starting power is self-contained within each DG. Each DG has sufficient capacity to start in sequence the loads required for the engineered safeguards equipment for the maximum hypothetical accident concurrent with loss of outside power. This capacity is adequate to provide a safe and orderly plant shutdown and maintain the plant in a safe condition.

Each of the two 125 volt d-c batteries is capable of supplying essential station d-c loads for eight hours and may be charged by the generator power supply.

Facilities are included to permit periodic starting and running of the DGs without interrupting plant operation. The DGs are synchronized to the bus and loaded periodically to ensure readiness for emergency services.

Criterion 39 – *Emergency Power for Engineered Safety Features* states:

Alternate power systems shall be provided and designed with adequate independency, redundancy, capacity and testability to permit the functioning required of the engineered safety features. As a minimum, the onsite power system and the offsite power system shall each independently provide this capacity assuming a failure of a single active component in each power system.

This criterion is met. Offsite power to the plant is available via the 161 kV line and after the unit is tripped, via backfeed from the 345 kV system through the main and unit auxiliary transformers.

When the unit is tripped and the 161 kV supply is not available, the motor-operated disconnect switch in the generator main leads is opened and the supply to the unit auxiliary transformers is re-established. Switch operation is accomplished by a motor operator supplied from the station battery.

Onsite power is provided by two diesel generator sets. Each independent diesel generator set is adequate for supplying the minimum engineered safeguards equipment for the maximum hypothetical accident concurrent with loss of outside power.

Station batteries provide onsite power for instrument and control systems. These batteries are subject to rigorous inspection and maintenance. Periodically, the charger voltage is manually lowered to test the batteries capability to assume load at the appropriate bus voltage.

The diesel generator facilities permit periodic starting and running during normal plant operations.

4.2 Precedent

Letter from NRC (W. Reckley) to Entergy (C. G. Anderson) dated October 29, 2001, "Arkansas Nuclear One, Unit No. 1 – Issuance of Amendment RE: The Conversion to Improved Standard Technical Specifications." (ML013050554) (Reference 6.1).

4.3 No Significant Hazards Consideration

The Omaha Public Power District (OPPD) has evaluated whether or not a significant hazards consideration is involved with the proposed amendment by focusing on the three standards set forth in 10CFR 50.92, "Issuance of amendment," as discussed below:

1. **Does the proposed amendment involve a significant increase in the probability or consequences of an accident previously evaluated?**

   Response: No.

   The addition of two safety related swing inverters to the 120 V a-c vital instrument buses is not an initiator of any previously evaluated accidents. The swing inverters will not prevent safety systems from performing any of the accident mitigation functions assumed in the safety analysis. The revisions proposed for the Technical Specifications (TS) take advantage of the operational flexibility provided by the swing inverters yet maintain current TS requirements that four inverters be operable.

   Similarly, the change maintains the current TS allowance for one of the required inverters to be inoperable for up to twenty-four hours provided all current TS requirements for operability are met.

   Although continued operation for up to twenty-four hours with one of the required inverters inoperable is allowed, the addition of the two safety related swing inverters is expected to decrease the amount of time that the station must operate with less than four inverters. This is because the design allows the inoperable inverter to be replaced by its associated swing (or non-swing) inverter. Reducing the need to shut the station down due to an inoperable inverter also reduces the risk associated with mode transition to shutdown.

   The correction of two typographical errors and correcting spacing inconsistencies in the text are administrative changes that do not involve a significant increase in the probability or consequences of any accident previously evaluated.

   Therefore, the proposed changes do not involve a significant increase in the probability or consequences of any accident previously evaluated.

2. **Does the proposed amendment create the possibility of a new or different kind of accident from any accident previously evaluated?**

   Response: No.

   The design function of the safety related inverters is unchanged. The addition of the safety related swing inverters and their bypass sources to the 120 volt a-c vital instrument distribution system allows preventative maintenance, repair and/or testing to be performed online. If a safety related inverter becomes inoperable or is otherwise out-of-service, its instrument bus is manually transferred to the associated swing inverter. If a required inverter should fail, the time that the station will operate with less than the four inverters required by TS 2.7(1)j should, in most cases, be less due to the ability to place an associated inverter online. Reducing the need to shut the station down due to an inoperable inverter also reduces the risk associated with mode transition to shutdown.

   Therefore, the proposed changes do not create the possibility of a new or different kind of accident from any previously evaluated.

3. **Does the proposed amendment involve a significant reduction in a margin of safety?**

   Response: No.

   The design function of the safety related inverters is unchanged. The addition of the safety related swing inverters to the 120 volt a-c vital instrument distribution system allows preventative maintenance or repair of a safety related inverter to be performed online since its instrument bus can be manually transferred to the associated swing inverter. Installation of the safety related swing inverters does not require changes to accident analyses or results. The revisions proposed for the TS maintain current TS requirements that four inverters be operable. Should a required inverter fail, the time that the station will operate with less than the four inverters required by TS 2.7(1)j should, in most cases, be less due to the ability to place an associated inverter online. Reducing the need to shut the station down due to an inoperable inverter also reduces the risk associated with mode transition to shutdown. In addition, administrative controls are in place to ensure the current station battery capacity is not degraded and to ensure battery margin is adequately maintained as a result of the inverter modification.

   Therefore, the proposed changes do not involve a significant reduction in a margin of safety.

Based on the above, OPPD concludes that the proposed amendment presents no significant hazards consideration under the standards set forth in 10 CFR 50.92(c), and, accordingly, a finding of "no significant hazards consideration" is justified.

4.4 Conclusions

In conclusion, based on the considerations discussed above, (1) there is reasonable assurance that the health and safety of the public will not be endangered by operation in the proposed manner, (2) such activities will be conducted in compliance with the Commission's regulation, and (3) the issuance of amendment will not be inimical to the common defense and security or to the health and safety of the public.

5.0 ENVIRONMENTAL CONSIDERATION

The proposed amendment does not involve (i) a significant hazards consideration, (ii) a significant change in the types or significant increase in the amount of any effluent that may be released offsite, or (iii) a significant increase in individual or cumulative occupational radiation exposure. Accordingly, the proposed amendment meets the eligibility criterion for categorical exclusion set forth in 10 CFR 51.22(c)(9). Therefore, pursuant to 10 CFR 51.22(b), no environmental impact statement or environmental assessment need be prepared in connection with the proposed amendment.

6.0 REFERENCES

6.1 Letter from NRC (W. Reckley) to Entergy (C. G. Anderson) dated October 29, 2001, "Arkansas Nuclear One, Unit No. 1 – Issuance of Amendment RE: The Conversion to Improved Standard Technical Specifications" (ML013050554)

6.2 FCS Updated Safety Analysis Report (USAR) Sections 8.3.5.2 and 8.3.5.3

6.3 Modification EC 31369, "Replace Existing Inverters and Provide Swing Inverters"

6.4 FCS USAR Appendix G, "Responses to 70 Criteria"

MARKUPS

OF

TECHNICAL SPECIFICATION

PAGES

2.0 LIMITING CONDITIONS FOR OPERATION
2.7 Electrical Systems

Applicability

Applies to the availability of electrical power for the operation of plant components.

Objective

To define those conditions of electrical power availability necessary to provide for safe reactor operation and the continuing availability of engineered safety features.

Specifications

(1) Minimum Requirements

The reactor shall not be heated up or maintained at temperatures above 300°F unless the following electrical systems are operable:

a. Unit auxiliary power transformers T1A-1 or -2 (4,160 V).

b. House service transformers T1A-3 and 4 (4,160 V).

c. 4,160 V engineered safety feature buses 1A3 and 1A4.

d. 4,160 V/480 V Transformers T1B-3A, T1B-3B, T1B-3C, T1B-4A, T1B-4B, T1B-4C.

e. 480 V distribution buses 1B3A, 1B3A-4A, 1B4A, 1B3B, 1B3B-4B, 1B4B, 1B3C, 1B3C-4C, 1B4C.

f. MCC No. 3A1, 3B1, 3A2, 3C1, 3C2, 4A1, 4A2, 4C1 and 4C2.

g. 125 V d-c buses No. 1 and 2 (Panels EE-8F and EE-8G).

h. 125 V d-c distribution panels AI-41A and AI-41B.

i. 120 V a-c instrument buses A, B, C, and D (Panels AI-40-A, B, C and D).

j. ~~Inverters A, B, C, and D.~~ Two (2) 125 V d-c bus No. 1 required inverters: (A and C), or (A and associated swing inverter), or (C and associated swing inverter) AND;

Two (2) 125 V d-c bus No. 2 required inverters: (B and D), or (B and associated swing inverter), or (D and associated swing inverter).

k. Station batteries No. 1 and 2 (EE-8A and EE-8B) including one battery charger on each 125 V d-c bus No. 1 and 2 (EE-8F and EE-8G).

l. Two emergency diesel generators (DG-1 and DG-2).

2.0 LIMITING CONDITIONS FOR OPERATION
2.7 Electrical Systems (Continued)

m. One diesel fuel oil storage system containing a minimum volume of 16,000 gallons of diesel fuel in FO-1, and a minimum volume of 10,000 gallons of diesel fuel in FO-10.

n. Lubricating oil inventory for each DG is ≥ 500 gallons.

o. Each required starting air receiver bank pressure is ≥ 190 psig.

(2) Modification of Minimum Requirements

The minimum requirements may be modified to the extent that one of the following conditions will be allowed after the reactor coolant has been heated above 300 °F. However, the reactor shall not be made critical unless all minimum requirements are met. If any of the provisions of these exceptions are violated, the reactor shall be placed in a hot shutdown condition within the following 12 hours. If the violation is not corrected within an additional 12 hours, the reactor shall be placed in a cold shutdown condition within an additional 24 hours.

a. Both unit auxiliary power transformers T1A-1 and -2 (4.16 kV) may be inoperable for up to 24 hours provided the operability of both diesel generators is demonstrated immediately.

b. Either house service transformer T1A-3 or T1A-4 (4.16kV) may be inoperable for up to 7 days provided the operability of the diesel generator associated with the inoperable transformer is immediately verified. The NRC Operations Center shall be notified by telephone within 4 hours after transformer inoperability. Continued operation beyond 7 days is permissible, provided a special report is submitted to the NRC within 48 hours after transformer inoperability pursuant to Section 5.9.3 of the Technical Specifications. The special report will outline the plans for restoration of transformer operability and the additional precautions to be taken while the transformer is out of service.

c. Both house service transformers T1A-3 and T1A-4 (4.16kV) may be inoperable for up to 72 hours provided the operability of both diesel generators is immediately verified. The loss of the 161kV incoming line renders both transformers inoperable. The NRC Operations Center shall be notified by telephone within 4 hours after transformer inoperability. Continued operation beyond 72 hours is permissible, provided a special report is submitted to the NRC within 48 hours after both transformers' ~~inoperabiltiy~~ inoperability, pursuant to Section 5.9.3 of the Technical Specifications. The special report will outline the plans for restoration of the transformers' operability and the additional precautions to be taken while the transformers are out of service.

2.0 LIMITING CONDITIONS FOR OPERATION
2.7 Electrical Systems (Continued)

l. Island buses 1B3A-4A, 1B3B-4B, and 1B3C-4C may be inoperable for up to 8 hours provided there are no inoperable required safeguards components which are redundant to components on the inoperable bus(es).

m. Either one of the 125V d-c buses No. 1 or 2 (Panels EE-8F or EE-8G) may be inoperable for up to 8 hours.

n. Either one of the 125V d-c distribution panels AI-41A or AI-41B may be inoperable for up to 8 hours.

o. One of the required inverters ~~(A, B, C, or D)~~ may be inoperable for up to 24 hours provided the reactor protective and engineered safeguards systems instrument channels supplied by the remaining three required inverters are all operable and the 120V a-c instrument bus associated with the inoperable inverter is powered from its bypass source.

(3) Modification ~~on~~ of Minimum Requirements for Diesel Fuel Oil, Diesel Lube Oil, and Starting Air

The minimum requirements may be modified to the extent that any of the following conditions will be allowed after the reactor coolant has been heated above 300°F. However, the reactor shall not be made critical unless all minimum requirements are met.

a. If the inventory of diesel fuel oil in FO-1 is less than 16,000 gallons and/or FO-10 is less than 10,000 gallons, but the combined inventory in FO-1 and FO-10 is greater than a 6 day supply (23,350 gallons), then restore the required inventory within 48 hours.

b. If one or more diesel generators has lube oil inventory < 500 gallons and > 450 gallons, then restore the lube oil inventory to within limits within 48 hours.

c. If the total particulates of fuel oil stored in FO-1 or FO-10 is not within limits, then restore fuel oil total particulates to within limits within 7 days.

d. If the properties of new fuel oil stored in FO-1 or FO-10 is not within limits, then restore stored fuel oil properties to within limits within 30 days.

e. If one or more diesel generators has the required starting air receiver bank with pressure <190 psig and > 150 psig, then restore starting air receiver bank pressure to > 190 psig within 48 hours.

f. If the Required Action and associated Completion Time of a, b, c, d or e are not met or one or more diesel generators have diesel fuel oil, lube oil, or a required starting air subsystem not within limits for reasons other than a, b, c, d, or e, then declare the associated DG inoperable immediately.

2.0 LIMITING CONDITIONS FOR OPERATION
2.7 Electrical Systems (Continued)

Basis

The electrical system equipment is arranged so that no single failure can inactivate enough engineered safeguards to jeopardize the plant safety. The 480 V safeguards are arranged on nine bus sections. The 4.16 kV safeguards are supplied from two buses.

The normal source of auxiliary power with the plant at power for the safeguards buses is from the house service power transformers being fed from the 161 Kv incoming line with on-site emergency power from either one of two diesel generators and off-site standby power via the unit auxiliary transformers.[1] The loss of the 161kV incoming line renders the house service transformers (T1A-3 and T1A-4) inoperable in that the transformers cannot supply power to the 4.16kV safeguards buses 1A3 and 1A4. Inoperability of the house service transformer(s) or loss of the 161kV incoming line is not reportable pursuant to 10 CFR 50.72 criteria; however, the NRC will be promptly notified of these events via the NRC Operations Center.

The two emergency diesel generators on site do not require offsite power for start up or operation.

Upon loss of normal and standby power sources, the 4.16 Kv buses 1A3 and 1A4 are energized from the diesel generators. Bus load shedding, transfer to the diesel generator and pickup of critical loads are carried out automatically.[2]

When the turbine generator is out of service for an extended period, the generator can be isolated by opening motor operated disconnect switch DS-T1 in the bus between the generator and the main transformer, allowing the main transformer and the unit auxiliary power transformers (T1A-1 and T1A-2) to be returned to service.[3] The auxiliary power transformers are not considered inoperable during these normal plant startup/shutdown realignments.

Minimum requirements are implemented prior to raising the RCS temperature above 300°F to assure availability of engineered safety features.

The time allowed to repair an inoperable inverter is based upon engineering judgement, taking into consideration the time required to repair an inverter and the additional risk to which the unit is exposed because of the inverter inoperability. In the event of inverter failure, the load on the inverter is automatically transferred to its safety related bypass source. The associated 120 V a-c instrument bus is considered OPERABLE when it is being powered from its bypass source and during the short time it takes to manually or automatically transfer between sources.

Swing inverter EE-8T is associated with inverters A and C. Swing inverter EE-8U is associated with inverters B and D. A swing inverter can take the place of either of its associated inverters. An inverter is required if it is one from the combination of inverters used to satisfy Specification 2.7(1)j. If at least four safety related inverters are OPERABLE and supplying 120 V a-c instrument buses A, B, C, and D in a combination that satisfies Specification 2.7(1)j, then the non-required inverter(s) may be inoperable or out-of-service indefinitely.

Equipment served by 4.16 kV and 480 V auxiliary buses and MCC's is arranged so that loss of an entire 4.16 kV bus does not compromise safety of the plant during DBA conditions. For example, if 4.16 kV bus 1A3 is lost, two raw water pumps, one low pressure safety injection pump, two high pressure safety injection pumps, one auxiliary feedwater pump, two

component cooling water pumps, one containment spray pump and two containment air fans are lost. This leaves two raw water pumps, one low pressure safety injection pump, one high pressure safety injection pump, one component cooling water pump, one containment spray pumps and two containment air fans which is more than sufficient to control containment pressure below the design value during the DBA.

3.0 SURVEILLANCE REQUIREMENTS

3.7 Emergency Power System Periodic Tests (Continued)

d. During refueling shutdowns the correct function of all D.C. emergency transfer switches shall be demonstrated by manual transfer of normal D.C. supply breakers at the 125 volt D.C. distribution panels.

(3) Emergency Lighting

The correct functioning of the emergency lighting system required for plant safe shutdown shall be verified at least once each year.

(4) 13.8 kV Transmission Line

The 13.8 kV transmission line will be energized and loaded to minimum shutdown requirements on a refueling frequency.

(5) ~~Inverters A, B, C, and D~~ Required Safety Related Inverters

The correct inverter output (voltage, frequency, and alignment to required 120 V a-c instrument buses) shall be verified weekly.

Basis

The emergency power system provides power requirements for the engineered safety features in the event of a DBA. Each of the two diesel generators is capable of supplying minimum required safety feature equipment from independent buses. This redundancy is a factor in establishing testing intervals. The monthly tests specified will demonstrate operability and load capacity of each diesel generator. These tests are conducted to meet the objectives of NRC Generic Letter 84-15 regarding the issue of reductions in cold fast starts. For this reason, the test verifying a 10 second start will be conducted from ambient conditions once per 184 days for each diesel. Other monthly tests will allow for manufacturer's recommended warm-up to reduce the mechanical stress and wear on the diesel engines. The fuel supply and various controls are continuously monitored and alarmed for off-normal conditions. Automatic starting on loss of off-site power and automatic load shedding, diesel connection, and loading will be verified on a refueling frequency. At the same intervals, capability will be verified for manual emergency control of these functions from the diesel and switch-gear rooms.

Considering system redundancy, the specified testing intervals for the station batteries should be adequate to detect and correct any malfunction before it can result in system malfunction. Batteries will deteriorate with time, but precipitous failure is extremely unlikely. The surveillance specified is that which has been demonstrated over the years to provide an indication of a cell becoming unserviceable long before it fails.

Surveillance of the required safety related inverters verifies that they are functioning properly with the 120 V a-c buses energized from the inverter. The verification of proper voltage and frequency output ensures that the required power is readily available for the

instrumentation connected to the 120 V a-c buses. The weekly frequency takes into account the redundant capability of the inverters and other indications available in the control room that alert the operator to inverter malfunctions.

References

(1) USAR, Section 7.3.4.2
(2) USAR, Section 8.4.
(3) USAR, Section 8.3.4
(4) USAR, Section 8.4.2

PROPOSED

TECHNICAL SPECIFICATION

PAGES

(RETYPED)

2.0 LIMITING CONDITIONS FOR OPERATION

2.7 Electrical Systems

Applicability

Applies to the availability of electrical power for the operation of plant components.

Objective

To define those conditions of electrical power availability necessary to provide for safe reactor operation and the continuing availability of engineered safety features.

Specifications

(1) Minimum Requirements

The reactor shall not be heated up or maintained at temperatures above 300°F unless the following electrical systems are operable:

a. Unit auxiliary power transformers T1A-1 or -2 (4,160 V).

b. House service transformers T1A-3 and 4 (4,160 V).

c. 4,160 V engineered safety feature buses 1A3 and 1A4.

d. 4,160 V/480 V Transformers T1B-3A, T1B-3B, T1B-3C, T1B-4A, T1B-4B, T1B-4C.

e. 480 V distribution buses 1B3A, 1B3A-4A, 1B4A, 1B3B, 1B3B-4B, 1B4B, 1B3C, 1B3C-4C, 1B4C.

f. MCC No. 3A1, 3B1, 3A2, 3C1, 3C2, 4A1, 4A2, 4C1 and 4C2.

g. 125 V d-c buses No. 1 and 2 (Panels EE-8F and EE-8G).

h. 125 V d-c distribution panels AI-41A and AI-41B.

i. 120 V a-c instrument buses A, B, C, and D (Panels AI-40-A, B, C and D).

j. Two (2) 125 V d-c bus No. 1 required inverters: (A and C), or (A and associated swing inverter), or (C and associated swing inverter) AND;

   Two (2) 125 V d-c bus No. 2 required inverters: (B and D), or (B and associated swing inverter), or (D and associated swing inverter).

k. Station batteries No. 1 and 2 (EE-8A and EE-8B) including one battery charger on each 125 V d-c bus No. 1 and 2 (EE-8F and EE-8G).

l. Two emergency diesel generators (DG-1 and DG-2).

m. One diesel fuel oil storage system containing a minimum volume of 16,000 gallons of diesel fuel in FO-1, and a minimum volume of 10,000 gallons of diesel fuel in FO-10.

n. Lubricating oil inventory for each DG is ≥ 500 gallons.

o. Each required starting air receiver bank pressure is ≥ 190 psig.

2.0 LIMITING CONDITIONS FOR OPERATION
2.7 Electrical Systems (Continued)

(2) Modification of Minimum Requirements

The minimum requirements may be modified to the extent that one of the following conditions will be allowed after the reactor coolant has been heated above 300°F. However, the reactor shall not be made critical unless all minimum requirements are met. If any of the provisions of these exceptions are violated, the reactor shall be placed in a hot shutdown condition within the following 12 hours. If the violation is not corrected within an additional 12 hours, the reactor shall be placed in a cold shutdown condition within an additional 24 hours.

a. Both unit auxiliary power transformers T1A-1 and -2 (4.16 kV) may be inoperable for up to 24 hours provided the operability of both diesel generators is demonstrated immediately.

b. Either house service transformer T1A-3 or T1A-4 (4.16kV) may be inoperable for up to 7 days provided the operability of the diesel generator associated with the inoperable transformer is immediately verified. The NRC Operations Center shall be notified by telephone within 4 hours after transformer inoperability. Continued operation beyond 7 days is permissible, provided a special report is submitted to the NRC within 48 hours after transformer inoperability pursuant to Section 5.9.3 of the Technical Specifications. The special report will outline the plans for restoration of transformer operability and the additional precautions to be taken while the transformer is out of service.

c. Both house service transformers T1A-3 and T1A-4 (4.16kV) may be inoperable for up to 72 hours provided the operability of both diesel generators is immediately verified. The loss of the 161kV incoming line renders both transformers inoperable. The NRC Operations Center shall be notified by telephone within 4 hours after transformer inoperability. Continued operation beyond 72 hours is permissible, provided a special report is submitted to the NRC within 48 hours after both transformers' inoperability pursuant to Section 5.9.3 of the Technical Specifications. The special report will outline the plans for restoration of the transformers' operability and the additional precautions to be taken while the transformers are out of service.

2.0 LIMITING CONDITIONS FOR OPERATION
2.7 Electrical Systems (Continued)

l. Island buses 1B3A-4A, 1B3B-4B, and 1B3C-4C may be inoperable for up to 8 hours provided there are no inoperable required safeguards components which are redundant to components on the inoperable bus(es).

m. Either one of the 125V d-c buses No. 1 or 2 (Panels EE-8F or EE-8G) may be inoperable for up to 8 hours.

n. Either one of the 125V d-c distribution panels AI-41A or AI-41B may be inoperable for up to 8 hours.

o. One of the required inverters may be inoperable for up to 24 hours provided the reactor protective and engineered safeguards systems instrument channels supplied by the remaining three required inverters are all operable and the 120V a-c instrument bus associated with the inoperable inverter is powered from its bypass source.

(3) Modification of Minimum Requirements for Diesel Fuel Oil, Diesel Lube Oil, and Starting Air

The minimum requirements may be modified to the extent that any of the following conditions will be allowed after the reactor coolant has been heated above 300°F. However, the reactor shall not be made critical unless all minimum requirements are met.

a. If the inventory of diesel fuel oil in FO-1 is less than 16,000 gallons and/or FO-10 is less than 10,000 gallons, but the combined inventory in FO-1 and FO-10 is greater than a 6 day supply (23,350 gallons), then restore the required inventory within 48 hours.

b. If one or more diesel generators has lube oil inventory < 500 gallons and > 450 gallons, then restore the lube oil inventory to within limits within 48 hours.

c. If the total particulates of fuel oil stored in FO-1 or FO-10 is not within limits, then restore fuel oil total particulates to within limits within 7 days.

d. If the properties of new fuel oil stored in FO-1 or FO-10 is not within limits, then restore stored fuel oil properties to within limits within 30 days.

e. If one or more diesel generators has the required starting air receiver bank with pressure < 190 psig and > 150 psig, then restore starting air receiver bank pressure to > 190 psig within 48 hours.

f. If the Required Action and associated Completion Time of a, b, c, d or e are not met or one or more diesel generators have diesel fuel oil, lube oil, or a required starting air subsystem not within limits for reasons other than a, b, c, d, or e, then declare the associated DG inoperable immediately.

2.0 LIMITING CONDITIONS FOR OPERATION
2.7 Electrical Systems (Continued)

Basis

The electrical system equipment is arranged so that no single failure can inactivate enough engineered safeguards to jeopardize the plant safety. The 480 V safeguards are arranged on nine bus sections. The 4.16 kV safeguards are supplied from two buses.

The normal source of auxiliary power with the plant at power for the safeguards buses is from the house service power transformers being fed from the 161 Kv incoming line with on-site emergency power from either one of two diesel generators and off-site standby power via the unit auxiliary transformers.[1] The loss of the 161kV incoming line renders the house service transformers (T1A-3 and T1A-4) inoperable in that the transformers cannot supply power to the 4.16kV safeguards buses 1A3 and 1A4. Inoperability of the house service transformer(s) or loss of the 161kV incoming line is not reportable pursuant to 10 CFR 50.72 criteria; however, the NRC will be promptly notified of these events via the NRC Operations Center.

The two emergency diesel generators on site do not require offsite power for start up or operation.

Upon loss of normal and standby power sources, the 4.16 Kv buses 1A3 and 1A4 are energized from the diesel generators. Bus load shedding, transfer to the diesel generator and pickup of critical loads are carried out automatically.[2]

When the turbine generator is out of service for an extended period, the generator can be isolated by opening motor operated disconnect switch DS-T1 in the bus between the generator and the main transformer, allowing the main transformer and the unit auxiliary power transformers (T1A-1 and T1A-2) to be returned to service.[3] The auxiliary power transformers are not considered inoperable during these normal plant startup/shutdown realignments.

Minimum requirements are implemented prior to raising the RCS temperature above 300°F to assure availability of engineered safety features.

The time allowed to repair an inoperable inverter is based upon engineering judgement, taking into consideration the time required to repair an inverter and the additional risk to which the unit is exposed because of the inverter inoperability. In the event of inverter failure, the load on the inverter is automatically transferred to its safety related bypass source. The associated 120 V a-c instrument bus is considered OPERABLE when it is being powered from its bypass source and during the short time it takes to manually or automatically transfer between sources.

Swing inverter EE-8T is associated with inverters A and C. Swing inverter EE-8U is associated with inverters B and D. A swing inverter can take the place of either of its associated inverters. An inverter is required if it is one from the combination of inverters used to satisfy Specification 2.7(1)j. If at least four safety related inverters are OPERABLE and supplying 120 V a-c instrument buses A, B, C, and D in a combination that satisfies Specification 2.7(1)j, the non-required inverter(s) may be inoperable or out-of-service indefinitely.

2.0 LIMITING CONDITIONS FOR OPERATION
2.7 Electrical Systems (Continued)

Equipment served by 4.16 kV and 480 V auxiliary buses and MCC's is arranged so that loss of an entire 4.16 kV bus does not compromise safety of the plant during DBA conditions. For example, if 4.16 kV bus 1A3 is lost, two raw water pumps, one low pressure safety injection pump, two high pressure safety injection pumps, one auxiliary feedwater pump, two component cooling water pumps, one containment spray pump and two containment air fans are lost. This leaves two raw water pumps, one low pressure safety injection pump, one high pressure safety injection pump, one component cooling water pump, one containment spray pumps and two containment air fans which is more than sufficient to control containment pressure below the design value during the DBA.

Each diesel generator has sufficient capacity to start and run at design load required by engineered safety features equipment. The safety features operated from one diesel generator can adequately cool the core for any loss of coolant accident and also maintain the containment pressure within the design value. The engine base tank capacity of 550 gallons on each diesel provides 3 hours running time (worst case loading) before transfer of fuel oil from the 18,000 gallon capacity emergency diesel generator fuel oil storage tank FO-1 is mandatory. Two fuel oil transfer pumps per diesel, with each being powered from the associated diesel, are available for transferring fuel oil from FO-1 to the day tanks. The minimum diesel fuel oil inventory available to the diesel generators from the emergency diesel generator fuel oil storage tank FO-1 is maintained to assure the operation of either: 1) one diesel generator at full rated design capacity for at least 3.6 days, or 2) one diesel generator at post accident load conditions for a minimum of 4.5 days.

A minimum amount of diesel fuel oil is reserved in the auxiliary boiler fuel oil storage tank FO-10 for transfer to the emergency diesel generator fuel oil storage tank in the event of an emergency to extend the fuel supply for diesel generator operation to 7 days. Methods of transfer of the fuel oil from this tank to FO-1 have been established and procedures have been developed so that the transfer can be made in a timely manner without adversely impacting diesel generator operation. Therefore, a minimum diesel fuel oil inventory available to the diesel generators from the total on-site diesel fuel oil storage capacity is maintained to assure the operation of one diesel generator at the required post accident loads for 7 days. The fuel inventory is allowed below the 7 day supply, but above a 6 day supply, for a period of 48 hours. This restriction allows sufficient time for obtaining the requisite replacement volume and performing the analyses required prior to addition of fuel oil to the tank. A period of 48 hours is considered sufficient to complete restoration of the required level prior to initiating a plant shutdown as required by Specification 2.7(3). This period is acceptable based on the remaining capacity (more than 6 days), the fact that procedures are in place to obtain replenishment, and the low probability of an event during this brief period.

Additional supplies of diesel fuel oil are available in the Omaha area and from nearby terminals. Ample facilities exist to assure deliveries to the site within 24 hours.

2.0 LIMITING CONDITIONS FOR OPERATION
2.7 Electrical Systems (Continued)

One battery charger on each battery shall be operating so that the batteries will always be at full charge; this ensures that adequate d-c power will be available for all emergency uses. Each battery has one battery charger permanently connected with a third charger capable of being connected to either battery bus. The chargers are each rated for 400 amperes at 130 volts. Following a DBA the batteries and the chargers will handle all required loads. Each of the reactor protective channels instrumentation channels is supplied by one of the safety-related a-c instrument buses. The removal of one of the safety-related a-c instrument buses is permitted as the 2-of-4 logic may be manually changed to a 2-of-3 logic without compromising safety.

The engineered safeguards instrument channels use safety-related a-c instrument buses (one redundant bus for each channel) and d-c buses (one redundant bus for each logic circuit). The removal of one of the safety-related a-c instrument buses is permitted as the two of four logic automatically becomes a two of three logic.

Required engineered safeguards components, as described in Specification 2.7(2), refers to components required to be operable by other Limiting Conditions for Operation within these Technical Specifications. If no other LCO requires a particular ESF component to be operable, then its redundant component is also not required to be operable due to this specification. As an example, Specification 2.3 requires that safety injection pumps be operable prior to the reactor being made critical, and Specification 2.7 applies when the RCS is above 300°F. If the RCS is above 300°F but the reactor is not critical, then no safety injection pumps are required to be operable.

The DG lubrication system is designed to provide sufficient lubrication to permit proper operation of its associated DG under all loading conditions. The system is required to circulate the lube oil to the diesel engine working surfaces and to remove excess heat generated by friction during operation. The onsite storage in addition to the engine oil sump is sufficient to ensure 7 days of continuous operation. This supply is sufficient supply to allow the operator to replenish lube oil from outside sources. With lube oil inventory < 500 gallons, sufficient lubricating oil to support 7 days of continuous DG operation at full load conditions may not be available. However, the Condition is restricted to lube oil volume reductions that maintain at least a 6 day supply. This restriction allows sufficient time to obtain the requisite replacement volume. A period of 48 hours is considered sufficient to complete restoration of the required volume prior to declaring the DG inoperable. This period is acceptable based on the remaining capacity (> 6 days), the low rate of usage, the fact that procedures will be initiated to obtain replenishment, and the low probability of an event during this brief period.

2.0 LIMITING CONDITIONS FOR OPERATION
2.7 Electrical Systems (Continued)

For proper operation of the standby DGs, it is necessary to ensure the proper quality of the fuel oil. FCS has a Diesel Fuel Oil Testing Program which includes proper fuel oil quality. This program includes purchasing, receipt testing of new fuel oil, and periodic analyses of the stored fuel oil. FCS is not committed to the fuel analysis portion of Regulatory Guide 1.137 (Ref. 4) or ANSI N195-1976 (Ref. 5); however, these standards were utilized as guidance in the development of the Diesel Fuel Oil testing program. The fuel oil properties governed by these Surveillance Requirements are the water and sediment content, the kinematic viscosity, specific gravity (or API gravity), and impurity level. TS 2.7(3)c is entered as a result of a failure to meet the acceptance criterion of Table 3-5, Item 9c. Normally, trending of particulate levels allows sufficient time to correct high particulate levels prior to reaching the limit of acceptability. Poor sample procedures (bottom sampling), contaminated sampling equipment, and errors in laboratory analysis can produce failures that do not follow a trend. Since the presence of particulates does not mean failure of the fuel oil to burn properly in the diesel engine, and particulate concentration is unlikely to change significantly between Surveillance intervals, and proper engine performance has been recently demonstrated (within 31 days), it is prudent to allow a brief period prior to declaring the associated DG inoperable. The 7 day Completion Time allows for further evaluation, resampling, and re-analysis of the DG fuel oil.

With the new fuel oil properties defined in the Bases for Table 3-5, Item 9c not within the required limits, a period of 30 days is allowed for restoring the stored fuel oil properties. This period provides sufficient time to test the stored fuel oil to determine that the new fuel oil, when mixed with previously stored fuel oil, remains acceptable, or restore the stored fuel oil properties. This restoration may involve feed and bleed procedures, filtering, or combinations of these procedures. Even if a DG start and load was required during this time interval and the fuel oil properties were outside limits, there is a high likelihood that the DG would still be capable of performing its intended function.

Each DG has two starting air subsystems (primary and secondary), each with adequate capacity for five successive start attempts of the DG without recharging the air start receivers. Either subsystem can fulfill the function of starting the DG, however the requirements of TS 3.7(1)a.i must be met for the required starting air subsystem. With starting air receiver bank pressure < 190 psig, sufficient capacity for five successive DG start attempts does not exist. However, as long as the receiver bank pressure is > 150 psig, there is adequate capacity for at least one start attempt, and the DG can be considered OPERABLE while the air receiver bank pressure is restored to the required limit. A period of 48 hours is considered sufficient to complete restoration to the required pressure prior to declaring the DG inoperable. This period is acceptable based on the remaining air start capacity, the fact that most DG starts are accomplished on the first attempt, and the low probability of an event during this brief period.

References

(1) USAR, Section 8.3.1.2
(2) USAR, Section 8.4.1
(3) USAR, Section 8.2.2
(4) Regulatory Guide 1.137
(5) ANSI N195-1976

3.0 SURVEILLANCE REQUIREMENTS

3.7 Emergency Power System Periodic Tests (Continued)

d. During refueling shutdowns the correct function of all D.C. emergency transfer switches shall be demonstrated by manual transfer of normal D.C. supply breakers at the 125 volt D.C. distribution panels.

(3) Emergency Lighting

The correct functioning of the emergency lighting system required for plant safe shutdown shall be verified at least once each year.

(4) 13.8 kV Transmission Line

The 13.8 kV transmission line will be energized and loaded to minimum shutdown requirements on a refueling frequency.

(5) Required Safety Related Inverters

The correct inverter output (voltage, frequency, and alignment to required 120 V a-c instrument buses) shall be verified weekly.

Basis

The emergency power system provides power requirements for the engineered safety features in the event of a DBA. Each of the two diesel generators is capable of supplying minimum required safety feature equipment from independent buses. This redundancy is a factor in establishing testing intervals. The monthly tests specified will demonstrate operability and load capacity of each diesel generator. These tests are conducted to meet the objectives of NRC Generic Letter 84-15 regarding the issue of reductions in cold fast starts. For this reason, the test verifying a 10 second start will be conducted from ambient conditions once per 184 days for each diesel. Other monthly tests will allow for manufacturer's recommended warm-up to reduce the mechanical stress and wear on the diesel engines. The fuel supply and various controls are continuously monitored and alarmed for off-normal conditions. Automatic starting on loss of off-site power and automatic load shedding, diesel connection, and loading will be verified on a refueling frequency. At the same intervals, capability will be verified for manual emergency control of these functions from the diesel and switch-gear rooms.

Considering system redundancy, the specified testing intervals for the station batteries should be adequate to detect and correct any malfunction before it can result in system malfunction. Batteries will deteriorate with time, but precipitous failure is extremely unlikely. The surveillance specified is that which has been demonstrated over the years to provide an indication of a cell becoming unserviceable long before it fails.

3.0 SURVEILLANCE REQUIREMENTS

3.7 Emergency Power System Periodic Tests (Continued)

Surveillance of the required safety related inverters verifies that they are functioning properly with the 120 V a-c buses energized from the inverter. The verification of proper voltage and frequency output ensures that the required power is readily available for the instrumentation connected to the 120 V a-c buses. The weekly frequency takes into account the redundant capability of the inverters and other indications available in the control room that alert the operator to inverter malfunctions.

References

(1) USAR, Section 7.3.4.2
(2) USAR, Section 8.4.1
(3) USAR, Section 8.3.4
(4) USAR, Section 8.4.2

Sketch
Of
Existing Inverter Configuration

LIC-07-0043

EXISTING INVERTER CONFIGURATION

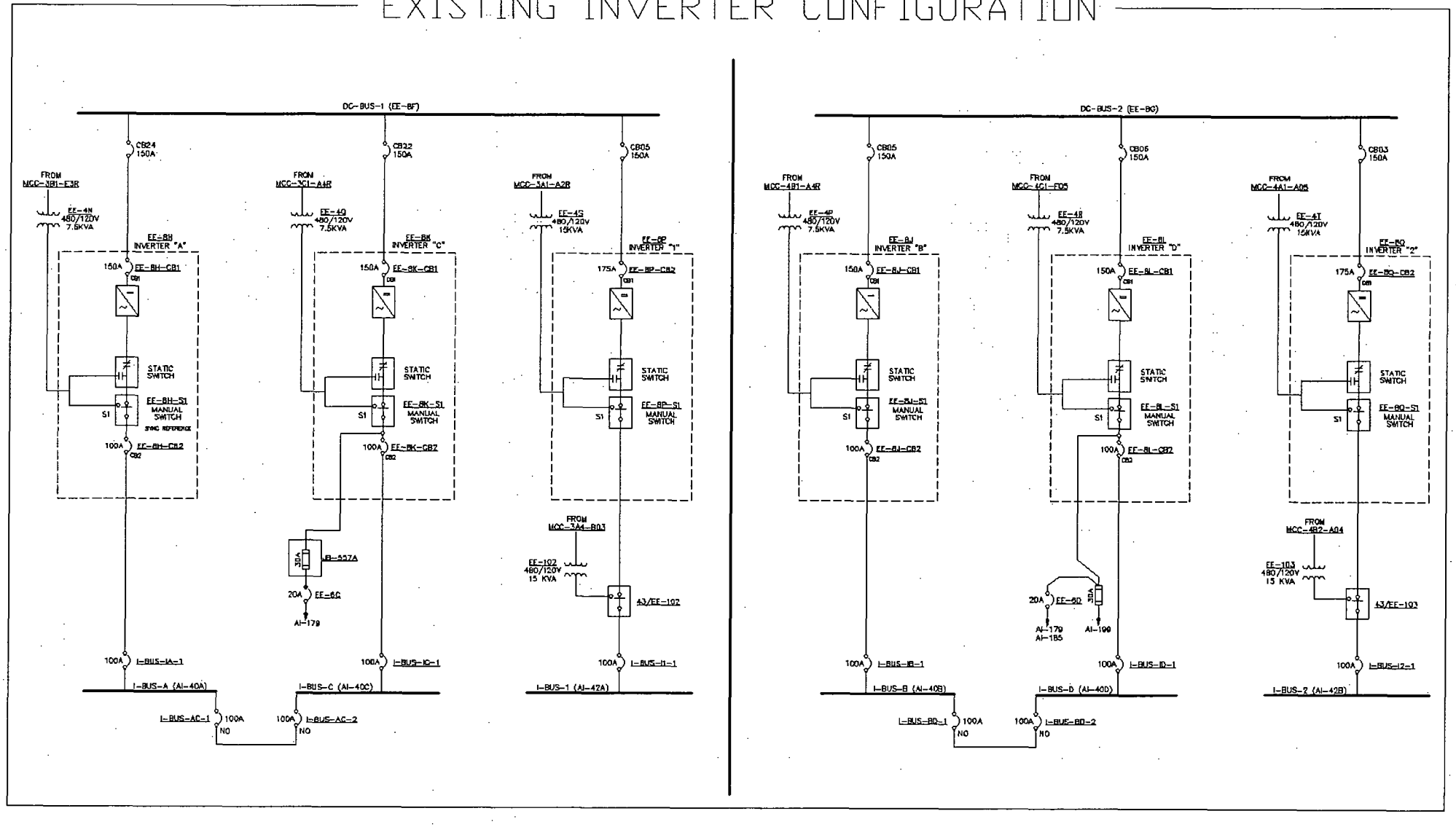

Sketch
of
New Inverter Configuration
for
Modification EC 31369

LIC-07-0043

NEW INVERTER CONFIGURATION