MANUAL FOR THE USE OF RADIOACTIVE MATERIALS

INSTITUTE PLANT, SOUTH CHARLESTON, WEST VIRGINIA

UNION CARBIDE CHEMICALS COMPANY
UNION CARBIDE PLASTICS COMPANY
UNION CARBIDE MINING COMPANY

DIVISION OF UNION CARBIDE CORPORATION

MARCH 1, 1960

MANUAL FOR THE USE OF RADIOACTIVE MATERIALS

Institute Plant-South Charleston Plant-Technical Center

Issued by:

The Radioactive Materials Committee

Mr. W. J. Skraba, Chairman - Chemicals Company Research Department
Mr. N. H. Ketcham, Radiological Protection Officer, Development Department
Mr. E. E. Buxton, South Charleston Plant, Works Engineering Department, Instrument Engineering Group
Mr. P. A. Laine, Jr., Institute Plant Instrument Department
Mr. C. E. Pownall, South Charleston Plant Purchasing Department
Mr. B. L. Murray, South Charleston Plant Medical Department
Mr. C. E. Rippetoe, Technical Center Purchasing, Design and Construction Department
Dr. J. F. Haskin, Development Department
Mr. H. T. Sessions, Olefins Company Engineering Department, Special Instrumentation Division
Dr. K. D. Williamson, Olefins Company Research Department

2nd Edition

Edited for the Committee by N. H. Ketcham, Radiological Protection Officer

South Charleston-Institute, West Virginia

March 31, 1960

TABLE OF CONTENTS

TABLE OF CONTENTS - Continued

ABSTRACT

There is an increasing availability at moderate cost of radioisotopes derived as by-products of the many nuclear reactors now in operation. This ready supply has enabled industry and others to investigate the use of radioisotopes as new laboratory and measuring tools. Our technical personnel in the Institute-South Charleston-Technical Center Area have been active in the study of the possible applications of these new tools. As a result, there is a rapidly increasing quantity and variety of these radioisotopes in use. This desirable situation is accompanied by an increased responsibility for the education of personnel in the safe handling, storage, and emergency procedures to be used.

It has been well established that radioisotopes in moderate quantities can be handled and used with safety by the average trained technician. An analogy might be drawn to plant experience with some acids. Intrinsically, many are hazardous and even lethal liquids, but in trained hands, they are merely chemicals useful in the laboratories and production units.

The object of this Manual is to establish an orderly procedure designed to protect the users and other persons from radioactive hazards, and at the same time to avoid inhibiting the user from conducting useful scientific investigations or measurements.

The following categories of uses for radioisotopes are either contemplated or already in existence in the Company properties represented by the Area Committee:

(a) Tracer work ("tagged" chemicals)

(b) Fixed sources for instrumentation

(c) Fixed sources for chemical irradiation

(d) Radiography

ABSTRACT - Continued

(e) Biological applications - plant and animal

In order to encompass all predictable events for the varied activities listed above, this manual covers procedures to be followed in connection with these topics:

(a) Procurement: 1. Requisitioning
2. Receiving
3. Transporting

(b) Storage

(c) Disposal

(d) Procedures for: 1. Area monitoring
2. Personnel monitoring
3. Area identification
4. Inventory

(e) Usage

Finally, it is emphasized that the ultimate responsibility for the proper handling of radioisotopes rests with the plant or department personnel who have procured and are using the material. The Radioactive Materials Committee will be glad to provide assistance or advice needed during the course of any project to which this manual relates.

RADIOACTIVE MATERIALS COMMITTEE FUNCTIONS

A. The Radioactive Materials Committee was initially established to formulate the objectives contained in this manual. The Committee now has the continuing responsibility to help assure that these objectives are being carried out in an effective manner. Inherent with this general responsibility are the following specific functions:

1. To insure that the contents of this manual represent safe, practical procedures.
2. To keep the contents of this manual up-to-date with respect to regulations of official agencies.
3. To act in an advisory capacity to assist users or prospective users with problems that are within the scope of this manual.

B. The Committee or its designated representative reviews for approval all purchase requisitions pertaining to radioactive materials to determine the following:

1. Whether the proposed use will be undertaken safely and in accordance with any applicable legal requirements.
2. Whether the necessary monitoring equipment will be available.
3. Whether the prospective user has the necessary experience and knowledge.

C. The Committee serves in a liaison capacity on all problems dealing with radioactivity. Liaison is provided between the several departments and plants which may be concerned with any particular problem. In addition, liaison between Company groups and official agencies is also provided.

Section I

GENERAL PROCEDURES

PROCUREMENT

In order to assure prompt and proper procurement and handling of radioactive materials the following procedure is recommended:

A. Purchase requisitions for all radioactive materials (whether under AEC jurisdiction or not) shall be routed, after appropriate departmental approvals, to the Radioactive Materials Committee for further approval. Requisitions should be plainly marked "Radioactive Materials" and sent to the Committee representative, Mr. N. H. Ketcham, Radiological Protection Officer, Room 206, Building 770, Technical Center. In most instances, the requisition will be approved by the Radiological Protection Officer, acting for the Committee. In some cases, review by several Committee members may be needed before the requisition is approved. Review at a meeting of the entire Committee is required before a requisition is disapproved.

B. When approved, the requisition will then be sent to the person expressly designated by the Applicable Purchasing Department to be the purchasing agent for radioactive materials. His responsibilities are as follows:

   1. He must make certain that no orders for radioactive materials are placed until the requisition has been approved as above.
   2. He must personally process all purchase requisitions pertaining to radioactive materials, both for original purchase and for return.
   3. He must assure that the orders are processed in accordance with the current requirements of the AEC and the State Board of Health, relating to procurement and shipment of these materials.

4. He must assume responsibility for the proper preparation of Form No. UC 334-43 (Notice of Purchase-Radiation Producing Materials or Equipment) and distribute the copies according to current instructions. A copy of Form UC 334-43 is attached, Appendix C.
5. He will procure from the vendor one extra copy of all operating and safety instructions pertinent to the radioactive material. This extra copy will be sent to the Radiological Protection Officer.

C. When any shipments of radioactive materials are received, the Receiving Department will set the package aside with minimum handling and notify the requisitioner of its arrival. Under no circumstances are Receiving Department personnel to open the package or shipping container for inspection. The requisitioner will go himself, or direct a qualified person to substitute for him, and examine the material at the Receiving Department. Suitable monitoring equipment will be used for this inspection. Breakage, spillage, or any damage must be ascertained at this time. Following inspection, the requisitioner will claim the shipment and become responsible for its future use. If the shipment shows any evidence of leakage or damage, the requisitioner will immediately notify the Radiological Protection Officer.

STORAGE

A. Storage of Encapsulated Sources:

The availability of suitable storage facilities is essential. For those sources not in frequent or constant use, there is a centralized storage area located in the base of the powerhouse stack, Building 47, Location 514 (Mainland). Several advantages result from the use of this facility:

1. It is remote from large concentrations of plant personnel
2. It minimizes the unnecessary dispersal of radioactive material
3. It simplifies inventories and record-keeping

Admission to this locked storage room may be gained by calling the Radiological Protection Officer, who maintains custody thereof. Written notice of transfer of any radioactive material into or out of this storage room must be given to the Radiological Protection Officer.

B. Storage of Unencapsulated Radioisotopes:

The proper storage of liquid, gas, or solid radioisotopes not in sealed capsules is an essential and integral part of the proper and safe use of these materials. The best storage methods vary, depending on the physical and chemical properties of the radioisotope, and must be determined for each individual situation. In all cases, however, the container must protect against the accidental spillage of the isotope. This requires the use of an unbreakable container with lids or access ports which can be securely closed. The container and its lid must be capable of withstanding a 5 foot fall to a hard surface without breakage.

In some instances, it may be proper to store unencapsulated radioactive materials in the storage room in Building 47, Location 514 (see Section A, above). Permission of the Radiological Protection Officer must be obtained prior to placing such materials in the storage room.

USE OF WARNING SIGNS

Locations in which radioactive materials are being used or stored must be marked with warning signs as required by the Atomic Energy Act, Title 10, Part 20. The relative dimensions and color of the standard AEC warning symbol are shown in Appendix B.

The following sign is required in any area accessible to personnel in which the radiation level is such that a major portion of the body could receive a dose in excess of 5 millirem in any one hour or a dose in excess of 150 millirem in any 5 consecutive days.

CAUTION

RADIATION AREA

If the radiation level is such that a major portion of the body could receive a dose of 100 millirem in any one hour, the area must be marked as follows:

CAUTION

HIGH RADIATION AREA
PERSONNEL MONITORING REQUIRED

In the event the amount of radioactive material (except natural uranium or thorium) in use or stored in the area exceeds 10 times the quantity of the material specified in the following table, the area must also be posted with the following sign:

This sign is also required on containers in which the material (except natural uranium or thorium) is transported, stored, or used if the contained amount exceeds [redacted] that shown in the following table.

CAUTION

RADIOACTIVE MATERIALS

USE OF WARNING SIGNS - Continued

Material	Micro-curies
Ag^{105}	1
Ag^{111}	10
As^{76}, As^{77}	10
Au^{198}	10
Au^{199}	10
Ba^{140} + LA^{140}	1
Be^{7}	50
C^{14}	50
Ca^{45}	10
Cd^{109} + Ag^{109}	10
Ce^{144} + Pr^{144}	1
Cl^{36}	1
Co^{60}	1
Cr^{51}	50
Cs^{137} + Ba^{137}	1
Cu^{64}	50
Eu^{154}	1
F^{18}	50
Fe^{55}	50
Fe^{59}	1
Ga^{72}	10
Ge^{71}	50
H^{3}(HTO or $H^{3}2O$)	250
I^{131}	10
In^{114}	1
Ir^{192}	10
K^{42}	10
La^{140}	10
Mn^{52}	1
Mn^{56}	50
Mo^{99}	10
Na^{22}	10
Na^{24}	10
Nb^{95}	10
Ni^{59}	1
Ni^{63}	1
P^{32}	10
Pd^{103} + Rh^{103}	50

Material	Micro-curies
Pd^{109}	10
Pm^{147}	10
Po^{210}	0.1
Pr^{143}	10
Pu^{230}	1
Ra^{226}	0.1
Rb^{86}	10
Re^{186}	10
Rh^{105}	10
Ru^{106} + Rh^{106}	1
S^{35}	50
Sb^{124}	1
Sc^{46}	1
Sm^{153}	10
Sn^{113}	10
Sr^{89}	1
Sr^{90} + Y^{90}	0.1
Ta^{182}	10
Tc^{96}	1
Tc^{99}	1
Te^{127}	10
Te^{129}	1
Th (natural)	50
Tl^{204}	50
Tritium, See H^{3}	250
U (natural)	50
U^{233}	1
U^{234} - U^{235}	50
V^{48}	1
W^{185}	10
Y^{90}	1
Y^{91}	1
Zn^{65}	10
Unidentified radio-active materials or any of the above in unknown mixtures.	0.1

DISPOSAL

A. Encapsulated radioactive materials are disposed of by returning them to the original vendor or to AEC facilities. Under no circumstance may these materials be disposed of by flushing through sewer system piping, burial, insertion into waste heaps, or by incineration.

In some instances the "user" may obtain Committee approval to dispose of unencapsulated radioactive materials in a manner which meets the conditions of permissible concentration in air and water, outlined in the Atomic Energy Act, Title 10, Part 20. The amount disposed of and the method of disposal must be recorded and a copy sent to the Radiological Protection Officer.

B. Return of radioactive materials to the original vendor or to AEC facilities will be handled by the purchasing agent who is designated by the Applicable Purchasing Department to be the person qualified for the purchase and return of these materials.

Requisitions covering returns should be plainly marked "Radioactive Materials" and routed first to the Radiological Protection Officer and then to the proper purchasing department.

Section II

DEPARTMENTAL RESPONSIBILITIES

THE USING DEPARTMENTS

A. Technical Skills:

The term "user" denotes the person principally in charge of any project or series of experiments involving the use of radioactive materials. While persons under his direction may perform the actual handling of materials, he will be nevertheless, responsible for the proper and safe procedures in force. Therefore, it is necessary that the user be familiar with the technical aspects of radioactivity in general, either by previous experience and training, or by a study of the various suggested publications listed in the bibliography. This knowledge is in addition to that needed for the problems of chemistry or measurements involved in the project itself.

B. Proper Facilities:

There are several minimal requirements (in terms of physical facilities) involved in the use of radioactive materials. These are listed below.

1. Instrumentation:

There are three kinds of monitoring devices which must be considered with each individual use of radioisotopes. No one set of recommendations can be made to apply to every laboratory or installation. However, the general classifications listed below may be used in the consideration of each problem.

(a) Personnel Monitoring: Any reliable personnel monitoring device may be used. This includes either pocket chamber or film badge types.

Any person who receives or is likely to receive a radiation dose, which is more than

25 per cent of the limits established in Appendix A, must use a monitoring device.

In any case, it shall be considered advisable to use personnel monitors when handling gamma-emitting sources in amounts over 10 microcuries.

(b) Area Monitoring: Any reliable beta-gamma counter (ion chamber or Geiger tube) with one range of sensitivity in the order of 0-10 mr/hr may be used to monitor the areas adjacent to an installation or storage site. These instruments find particular application when using medium or low level gamma emittors or in checking areas for leakage from beta or gamma sources.

(c) Air Sampling: It is the responsibility of the "user" to make certain that the radioactive materials are being handled in such a manner that the amount released to the air in the working environment does not exceed the permissible concentrations given in the Atomic Energy Act, Title 10, Part 20. In some instances, this requires taking air samples in a suitable ionization chamber and measuring the activity of the contained air by means of a vibrating reed electrometer. This technique is applicable for Carbon^{14} and for tritium. In some instances, air samples can be collected by drawing a known volume of the atmosphere through a filter paper, followed by measuring the activity collected on the paper. If there is a possible need for air sampling, either to comply with the AEC regulation or to assure the

absence of hazard to personnel, the "user" will seek the advice of the Committee concerning the suitability of a sampling and counting procedure.

2. Shielding of Encapsulated Sources:

(a) Shielding for stored radioactive material should be sufficient to reduce the dose rate to less than 5 mrem/hr at a distance of 12 inches from the nearest access point to the stored material.

(b) The maximum practical shielding shall be used to isolate radioactive materials from personnel during normal use.

(c) No use of encapsulated sources may be undertaken if there is even a remote possibility that the capsule may be damaged with the release of radioactive dust, gas, or liquid. (This includes sources containing radium.)

3. Use of Warning Signs:

(a) The locations in which radioactive materials are being either used or stored must be marked with warning signs of approved AEC design as described in Section I, "Use of Warning Signs". It will be the responsibility of the "user" to assure that such signs remain in place in a legible condition as long as radioactive materials are present in the location.

(b) The approved AEC warning signs must be used in addition to any other safety instructions of our own wording which are felt necessary to fully inform the employees of other hazards which might be present in addition to the potential radiation hazard.

to assure they are operating properly. This service will be performed in the following manner:

1. At approximately six-month periods each survey instrument will be picked up from the user and transported to Building 770, Room 321.
2. Following a battery check and necessary adjustments the instrument will be calibrated using a Radiocobalt Co^{60} source of approximately 1 millicurie, purchased specifically for this purpose. If after the battery check and necessary adjustments, the instrument does not appear to be functioning properly, the instrument will be sent to the Special Instrumentation Division for repairs. Following this the instrument will be returned to Building 770, Room 321 for calibration.
3. A calibration curve or table will be prepared and returned with the instrument to the user.

F. The responsible supervisors and staff personnel of the using plant or department will be notified of the results obtained from periodic inspections, particularly of any potential or actual unsafe conditions which are found to exist.

G. Close contact with the Committee will be maintained, to assist in the determination of safe practices in conformity with general plant or department procedures, and to assist in the control or investigation of any radiation accident.

PERSONNEL SAFETY DEPARTMENTS AND MEDICAL DEPARTMENTS

Basic functional responsibilities are discharged by these departments to assist in assuring that the health and safety of employees is protected. These basic responsibilities pertain to radioactive materials as well as other potential hazards. The existence of the Radioactive Materials Committee does not change the fundamental responsibilities of the Personnel Safety or Medical Departments. The Committee does provide a source of advice and information, and the assistance of qualified technical experts, to assist all departments in carrying out their responsibilities.

INSTRUMENT GROUPS

A. In experimentation using radioactive materials, instrument groups will be defined as the user and will follow the procedures outlined in this manual.

B. Since these groups may also be the organizations principally responsible for dispensing radioactive materials to operating units and to other users, it will be an added responsibility to assure that the initial instrument installations containing these materials be consistent with safe practices and with AEC requirements.

C. The installation of an instrument containing radioactive materials will be considered a transfer of the material. Therefore, the following persons shall be notified when a radioactive source is installed.

   1. Head of the department to which the transfer has been made
   2. Radiological Protection Officer

D. The Instrument Division will provide its usual services with respect to repairing and maintaining instruments used by the various groups to measure radiation.

E. When needed, the Special Instrumentation Division of the Olefins Company Engineering Department will provide the necessary operating and safety instruction for persons who will use instrument installations containing radioactive materials.

5. When requested, procure from the vendor one extra copy of all operating and safety instructions pertinent to the radioactive material. This request will be made by the Radiological Protection Officer by a note placed on the requisition. The extra copy will be sent to the Radiological Protection Officer, Mr. N. H. Ketcham, Building 770, Room 206, Technical Center.

RECEIVING AND SHIPPING DEPARTMENTS

Since all incoming and outgoing radioactive materials must pass through the hands of Receiving or Shipping Department personnel, they should exercise special precautions upon receipt of such materials. Safe practice will consist of the following:

A. Incoming Shipments:

When shipments of radioactive materials are received, the packages shall be set aside with minimum handling by Receiving Department personnel, and the requisitioner will be notified of the arrival. ICC regulations make mandatory the marking of these packages with a POISON label and a statement thereupon of the type and quantity of materials.

Under no circumstances may these packages be opened without permission of the requisitioner whose duty it is to test for dose rates and spillages with the proper equipment.

B. Outgoing Shipments:

Transshipments or returns of radioactive materials must conform to the latest ICC regulations governing this class of poisons. Instructions will be issued to the Shipping Department by the Traffic Department, and supervision during crating will be performed by the requisitioner with the proper area and personnel monitoring equipment.

C. A typical memorandum which could be used to instruct stores personnel concerning the handling of radioactive materials is included in this manual as Appendix F.

TRAFFIC DEPARTMENTS

The Traffic Departments will remain familiar with the latest ICC regulations governing the inbound and outbound shipments of radioactive materials. They will issue instructions to the Shipping Departments regarding packaging and marking of the shipments when same are to be shipped outside the plant or Technical Center boundaries.

Section III

APPENDIXES

APPENDIX A

PERMISSIBLE EXPOSURE

The following is from "Notice of Proposed Rule Making", AEC publication dated April 24, 1959, pertaining to proposed revisions in the Atomic Energy Act, Chapter 1, Title 10, Part 20, Standards for Protection Against Radiation. Because this represents the latest thinking of qualified experts concerning the allowable limit of exposure of individuals to radiation, we will use this as our guide for permissible exposure. However, in some respects, the present limit of exposure as defined in Title 10, Part 20 is more restrictive than this proposed revision. In such instances, the requirements of Title 10, Part 20 will be met (See Appendix A-4).

"§ 20.101 Exposure of individuals to radiation in restricted areas. (a) Except as provided in paragraphs (b) and (c) of this section, no licensee shall possess, use or transfer licensed material in such a manner as to cause any individual in a restricted area to receive in any period of one calendar quarter from radioactive material and other sources of radiation in the licensee's possession a dose in excess of the limits specified in the following table:

	Rems. per calendar quarter
1. Skin, at basal layer of epidermis, of the hands, forearms, feet or ankles.	18.75
2. Skin, at basal layer of epidermis, in parts of the body not described in paragraph 1.	2.5 *
3. Whole body	1.25*
Gonads	1.25
Active blood-forming organs	1.25
Head and trunk	1.25
Lens of the eye	1.25

"(b) A licensee may permit an individual in a restricted area to receive a dose to the whole body in addition to that permitted under paragraph (a) of this section provided:

---

* For exposures of the whole body to X or gamma rays up to 3 mev, this condition may be assumed to be met if the "air dose" does not exceed 1.25 r provided the dose to the gonads does not exceed 1.25 rem. "Air dose" means that the dose is measured by an appropriate instrument in air in the region of highest dosage rate to be occupied by an individual without the presence of the human body or other absorbing and scattering material.

"1. During any calendar quarter, the dose to the whole body from radioactive material and other sources of radiation in the licensee's possession shall not exceed 3 rems; and

"2. The dose to the whole body, when added to the previously accumulated occupational dose to the whole body, shall not exceed the maximum permissible accumulated dose. The maximum permissible accumulated dose to the whole body shall be calculated according to the following formula:

"MPD	=	5 (N-18) rems
where MPD	=	The maximum permissible accumulated dose in rems.
N	=	The individual's age in full years.

and

"3. The licensee has determined the individual's previously accumulated occupational dose to the whole body on AEC Form 20-1, or on a form substantially similar to and containing all the information required in that form; and has otherwise complied with the requirements of Section 20.102.

"As used in this paragraph (b), 'dose to the whole body' shall be deemed to include any dose to the whole body, gonads, active blood-forming organs, head and trunk, or lens of the eye.

"(c) In addition to that permitted under paragraph (a) of this section, a licensee may permit an individual in a restricted area to receive a dose to the skin of the whole body, at the basal layer of epidermis, provided:

"1. During any calendar quarter the dose to the skin of the whole body from radioactive material and other sources of radiation in the licensee's possession shall not exceed 6 rems;

"2. The dose to the skin of the whole body when added to the previously accumulated occupational dose to the skin of the whole body shall not exceed the maximum permissible accumulated dose to that part of the body. The maximum permissible accumulated dose to the skin of the whole body shall be calculated according to the following formula:

"MPD = 10 (N-18) rems

MPD = The maximum permissible accumulated dose in rems.

N = The individual's age in full years.

and

"3. The licensee has determined the individual's previously accumulated occupational dose to the skin of the whole body on AEC Form 20-1, or on a form substantially similar to and containing all the information required in that form; and has otherwise complied with the requirements of Section 20.102.

"As used in this paragraph (c), 'skin of the whole body' means the skin of any part of the body other than the hands, forearms, feet or ankles.

"(d) As used in this section 'calendar quarter' means any of the following periods: January 1 to March 31, inclusive; April 1 to June 30, inclusive; July 1 to September 30, inclusive; and October 1 to December 31, inclusive.

The following is the table of permissible weekly dose as contained in the Atomic Energy Act, Title 10, Part 20. Until Title 10, Part 20 is amended the following exposure table has legal status, although it is no longer completely consistent with the latest opinions of qualified experts.

PERMISSIBLE WEEKLY DOSE

Conditions of Exposure		Dose in Critical Organs (mrem)			
Parts of Body	Radiation	Skin at basal layer of Epidermis	Blood-forming organs	Gonads	Lens of eye
Whole body	Any radiation with half-value-layer greater than 1 mm of soft tissue	[1]600	[1]300	[1]300	[1]300
Whole body	Any radiation with half-value-layer less than 1 mm of soft tissue	1,500	300	300	300
Hands and forearms or feet and ankles or head and neck	Any radiation	[2]1,500	---	---	---

[1] For exposures of the whole body to X or gamma rays up to 3 mev, this condition may be assumed to be met if the "air dose" does not exceed 300 mr, provided the dose to the gonads does not exceed 300 mrem. "Air dose" means that the dose is measured by an appropriate instrument in air in the region of highest dosage rate to be occupied by an individual, without the presence of the human body or other absorbing and scattering material.

[2] Exposure of these limited portions of the body under these conditions does not alter the total weekly dose of 300 mrem permitted to the bloodforming organs in the main portion of the body, to the gonads, or to the lens of the eye.

APPENDIX B
STANDARD A.E.C. SYMBOL

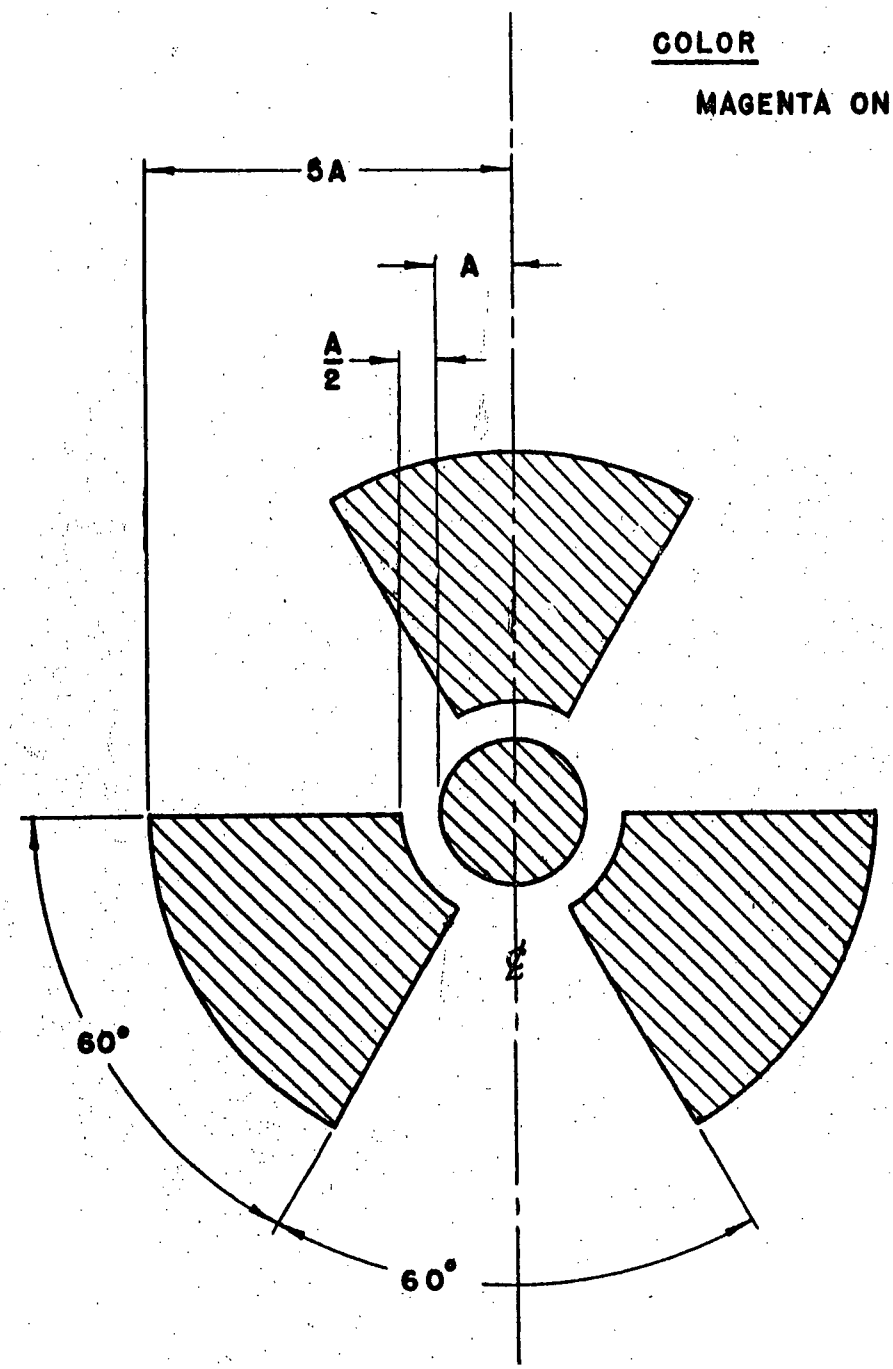

COLOR

MAGENTA ON YELLOW BACKGROUND

APPENDIX C

NOTICE OF PURCHASE – RADIATION PRODUCING MATERIALS OR EQUIPMENT

INSTRUCTIONS:
PART 1 – INDUSTRIAL MEDICINE AND TOXICOLOGY DEPARTMENT, NEW YORK PART 2 – INSURANCE DEPARTMENT, NEW YORK PART 3 – DIVISIONAL SAFETY REPRESENTATIVE PART 4 – WORKS PURCHASING DEPT. FILE

ORDERED BY - COMPANY	LOCATION	PURCHASE ORDER DATE
VENDOR	ADDRESS	PURCHASE ORDER NUMBER
REQUISITIONER	WORKS PURCHASING AGENT	ESTIMATED DELIVERY DATE

THE FOLLOWING WAS PURCHASED

DESCRIPTION (MODEL, SERIAL NUMBER, ETC.) (SEE INSTRUCTIONS BELOW)

LISTED BELOW ARE SOME OF THE MATERIALS AND EQUIPMENTS WHICH SHOULD BE COVERED BY THIS REPORT, AND THE INFORMATION WHICH SHOULD BE INCLUDED ABOVE REGARDING EACH OF THE ITEMS LISTED.

1 INDUSTRIAL X-RAYS: Give the K V P and maximum tube current if available, and purpose of use (radiography of castings, fluorescence analysis, diffraction for crystallography, fluoroscopy of materials, etc.).

2 MEDICAL X-RAYS: Give K V P and maximum tube current if available and purpose of use (diagnostic, therapeutic, etc.).

3 RADIOACTIVE STATIC ELIMINATORS: Give type and length of active face, e.g., Alphatron, 24" long; Ionotron T-200, 24" long; also briefly give types of machines on which installed or other use.

4 BETA RAY GAUGES: Give amount and type of radioactive element if available, e.g., 10 millicuries of Strontium 90, and type of machine on which installed, or other use.

5 NUCLEAR REACTORS: Give power in kilowatts, and briefly describe type (e.g., U-235 package power reactor, air-cooled; U-238 homogeneous fast breeder, pressurized water reactor, etc.).

6 PARTICLE ACCELERATORS: Give type, voltage and purpose or use (e.g., betatron, 30 million volts, X-ray generation; Van de Graaff electrostatic accelerator, 10 million volts, acceleration of protons).

7 RADIOACTIVE MATERIALS: Identify, give strength, and nature of use and specify whether source is sealed or unsealed. Estimate quantity of material used annually and for short-lived isotopes, maximum amount on hand at any one time; e.g., 3 curies of cobalt 60, sealed, gamma radiography; 1 curie of radium as radium sulfate; 10 millicuries of carbon 14, tracer, unsealed; 500 microcuries of iodine 131, tracer, unsealed; used annually - 1 curie; average quantity on hand - 10 millicuries. Where a large number of small sources with short half-lives are involved, the name of each isotope should be given, but only the total amount of all sources need be stated (iodine 131, sodium 24, phosphorus 32; average on hand 500 millicuries, average annual use 1 curie).

8 OTHER: Specify any other device as below, or of type and nature of use not covered in described categories (e.g., electron microscope, etc.)

UC 334-43

APPENDIX D

DEFINITIONS OF RADIATION TERMS COMMONLY USED

Gamma Radiation:	High frequency electromagnetic radiation emitted by the nucleus of an atom.
Beta Radiation:	Charged particles emitted from the nucleus of an atom, and having a mass equal to an electron.
Alpha Radiation:	Charged particles consisting of a helium nucleus of 2 protons and 2 neutrons.
X-Radiation:	High frequency electromagnetic radiation produced by electrons striking a target.
Curie:	The amount of a radioactive material from which the number of disintegrations per second is 3.7×10^{10}.
Roentgen:	The amount of X or gamma radiation which produces in air ions carrying one electrostatic unit of electricity per 0.001293 g of air.
mr:	1/1000 of a roentgen (milliroentgen)
Dose:	A quantity of radiation
Rad:	The unit of absorbed dose. It is 100 ergs per gram of any absorbing tissue.
Rem:	The unit of the dose to tissue in terms of its estimated biological effect in comparison with one roentgen of X-radiation.
mrem:	1/1000 of a Rem (millirem)
Encapsulated Source:	Radioactive material permanently sealed in a special container designed to prevent leakage of the radioactive material.

APPENDIX E

UNITED STATES
ATOMIC ENERGY COMMISSION
WASHINGTON 25, D. C.

NOTICE TO BYPRODUCT MATERIAL LICENSEES

In the event of fire or other emergencies in facilities utilizing radioactive materials, it is desirable for local fire and police officials to be informed of the location and nature of radioactive materials.

This information will permit such officials to establish appropriate procedural safeguards to protect personnel and members of the public from potential radiation hazards that may arise from fires involving radioactive materials. Prior planning for such emergencies may serve also to minimize the possibility of delay or unnecessary procedures in fire fighting based on unwarranted fears regarding radioactive materials that may be present.

It is suggested, therefore, that you notify local fire and police officials of your possession of radioactive materials and keep such officials currently informed of the types and quantities of radioactive materials on hand, and the radiation characteristics and location of such materials.

H. L. Price

H. L. Price, Director
Division of Licensing and
Regulation

APPENDIX F

DESIGN AND CONSTRUCTION
UNION CARBIDE CHEMICALS COMPANY
SOUTH CHARLESTON, WEST VIRGINIA

MEMORANDUM

December 3, 1959

To: ALL STORES PERSONNEL

From: J. S. Barker

Subject: Handling Deliveries of Radioactive Materials

Stores Personnel, when assigned receiving duties, shall read all labels and information marked on the outside of each container before it is handled or opened. These safety precautions are necessary to avoid harm to yourself or damage to the material.

You will be receiving radioactive materials from time to time. Should the container be ruptured while in transit the entire package could become contaminated, in which case it may be harmful to the person handling the shipment. Shipments received with labels indicating radioactive material shall not be unnecessarily handled until they have been monitored and inspected by the requisitioner.

Specific instructions for handling radioactive materials follow:

1. Do not open container.
2. Notify requisitioner at once when shipment arrives.
3. Have requisitioner check the shipment for quality and quantity.
4. Do not deliver shipments that have not been monitored by the requisitioner.
5. Do not allow shipment to remain in the receiving area any length of time without being monitored.

J. S. Barker
J. S. Barker

JSB:vt

APPENDIX G

TYPICAL RULES FOR RADIOISOTOPE LABORATORIES

Laboratories handling radioisotopes in unencapsulated forms offer additional and unique problems in radiological protection. Each radioisotope laboratory must establish safety practices consistent with the kind of radioactive materials being handled and the nature of the work being done in the laboratory. This safety practice must include any air sampling and personnel monitoring procedures required to comply with the Atomic Energy Act, Title 10, Part 20, and to assure the safety of the employees.

The following typical rules are given for their information value only, and apply primarily to a Carbon^{14} laboratory. The rules adopted for each laboratory are in addition to procedures needed to meet AEC requirements or to comply with specific provisions of this Manual.

A. Routine Procedure:

1. When not in use, the laboratory must be locked. The radioactive materials must be stored either in a properly marked cabinet or, if the radioisotope is in a volatile state, placed in a properly identified hood.
2. No smoking or eating in radioisotope laboratories is permitted. Refrigerators will not be used jointly for foods and radioactive materials.
3. Wash hands thoroughly before handling any object which goes to the mouth, nose, or eyes.
4. Do not work with radioactive materials if there is a break in the skin of the hands.
5. Always use rubber gloves when handling more than a few hundred counts per minute. Wear protective clothing: laboratory coats, masks, shoe covers, as needed.
6. Never pipette by mouth; use mechanical devices.

7. When possible perform radioactive work over trays lined with removable absorbent material.
8. Clean up minor spills immediately.
9. Waste material shall be kept in special containers prior to disposal.
10. Special radioactive waste cans shall be provided and properly labeled.
11. Periodic surveys of the working area and equipment are to be made to verify the absence of radioactive contamination.
12. Personnel leaving the laboratory are required to inspect their skin and clothing for radioactive contamination.
13. Cleaning crews shall not be permitted to clean floors and benches. Laboratory personnel are responsible for the housekeeping.
14. Repairs, such as plumbing, shall not be undertaken unless the equipment and area have been monitored and found safe.

B. Emergency Procedures in Case of Spills, Explosion or Other Accident Involving Radioactive Materials:

1. Rid yourself of contamination; remove contaminated clothing and wash thoroughly.
2. Flush out any wounds with copious amounts of water.
3. If hazard is extreme, evacuate the room and lock the door.
4. Do not track contamination over an unnecessary area. Remove contaminated shoes and outer clothing at edge of contaminated area before going to a clean area.
5. Call the Radiological Protection Officer or some member of the Committee for assistance.

6. Unless immediate action is demanded to safeguard personnel, decontamination should be done under the supervision of the Radiological Protection Officer.
7. All personnel and areas involved must be monitored to assure adequate decontamination before normal work is resumed.

APPENDIX H

TYPICAL PROCEDURES FOR LARGE FIXED IRRADIATION SOURCES

Large "fixed" irradiation sources offer some additional problems in radiological protection, and operational procedures. The following general procedures are in addition to those needed to meet AEC requirements or to comply with specific provisions of this manual.

Large fixed irradiation sources are defined as permanently-sealed radioactive material in excess of 100 curies of activity, fixed in adequately shielded permanent locations.

Prior to removing any large source from its permanent shielded location, the proposed actions to be taken and safety procedures to be used should be reviewed by the Committee.

No uses of large sources for radiographic purposes have been approved by the Committee. The following section does not pertain to such use.

A. Instrumentation:

1. Personnel Monitoring:

   Since they perform different and complementary functions, both film badges and pocket ionization chambers or dosimeters shall be worn by all personnel while at the radiation site.

2. Area Monitoring:

   In addition to portable monitoring devices, there shall be permanently installed at the irradiation site, an automatic monitor which will record the radiation levels at points judged likely to give the greatest radiation exposure to personnel. Such records shall become a part of the permanent health records of the Company, and shall be kept in the files of the using department.

The area monitor shall be arranged to give a visible or audible warning, if the radiation exceeds a certain prefixed level, which shall not be higher than the maximum permissible exposure levels fixed by the Atomic Energy Commission or other competent authority.

Operation of the irradiation facility will not be permitted, if the area monitor shows radiation levels above this permissible exposure.

Personnel entering the shielding chamber of the irradiation site will be required to carry portable monitoring devices sensitive to 0-10 mr/hr and will be required to leave such premises immediately, if the device indicates an excessive radiation level.

B. Film Badge Service:

Film badge service shall be maintained with a competent outside agency. This agency shall keep the badges on file for the length of time prescribed in the service contract, and shall then return them to the using department. Reports of film badge exposure measurements are to be sent to the Radiological Protection Officer and kept permanently on file.

C. Operational Procedures:

1. Transfer of Sealed Radioactive Sources:

Transfer of high-activity, sealed radioactive sources from the shipping container to their fixed location will be made only behind shielding adequate to reduce the radiation dose to operating personnel below the maximum permissible levels. The transfer may be done by remotely-controlled manipulators from personnel locations behind a barrier wall, or alternatively the

transfer operation may be done with long-handled tongs, if both shipping container and radioactive source holder to which it will be transferred, are submerged below a depth of water adequate to provide necessary shielding at all times during the operation.

2. Experiments Using Large Irradiation Facilities:

(a) All experiments will be designed to limit exposure of personnel to a minimum. This may be accomplished by setting up the experimental apparatus in a radiation-free area and, after personnel have left the area, moving the source by remote control to the vicinity of the apparatus. Alternately, the apparatus to be exposed may be placed in the vicinity of the source submerged under a depth of water adequate to shield personnel.

(b) Safeguards must be provided to insure absence of all personnel from the exposure area during radiation exposures. These safeguards should include: a visual and/or audible alarm in the exposure area interlocked with the source-moving mechanism; an alternative manual source-moving mechanism with an interlock to prevent activation of the source-moving mechanism inadvertently; a barrier-gate to the exposure area, which can be opened manually at all times from the inside, but is locked from the outside automatically when the source-moving mechanism is activated.

(c) At least two technicians, familiar with the proper use of radiation must be present when radiation exposures are begun or ended.

(d) Persons working inside the shielded area will be required to carry personnel and area monitoring devices.

APPENDIX I

STATE OF WEST VIRGINIA
DIVISION OF CIVIL DEFENSE
151 11th AVE.
SO. CHARLESTON

22 July 1958

STATE MEMORANDUM NO. 8, VOLUME IX

TO: ALL CIVIL DEFENSE PERSONNEL

SUBJECT: AEC ANNOUNCES SERVICES AVAILABLE TO WEST VIRGINIA IN EVENT OF RADIATION INCIDENT

The following information has been received by the West Virginia Civil Defense Agency from the United States Atomic Energy Commission, Oak Ridge, Tennessee and is here reproduced for your information.

"The Atomic Energy Commission announced today radiological safety teams are available to assist local authorities in the State of West Virginia in the event of a major accident in the state involving radioactive materials.

"Governor Cecil H. Underwood, of West Virginia, was advised such assistance is available from Oak Ridge, Tennessee, in a letter from S. R. Sapirie, Manager of the Commission's Oak Ridge Operations.

"Sapirie's letter was forwarded to the Governor as the Commission announced in Washington its offices throughout the country are acquainting state and local officials of the services the AEC has available should a nuclear incident occur.

In his letter to the Governor, Sapirie said:

'Because of the many safeguards which have been established by the state and Federal governments, we believe that the probability of a serious incident involving radioactive materials or radiation is remote.'

'However, we recognize our responsibility to ameliorate any possible hazard to the health and safety of the public.'

"The Oak Ridge official said representatives of the Commission will contact the Governor later to discuss a coordinated plan for management of radiation incidents in West Virginia.

"The Washington announcement said:

'While highly unlikely, it is possible that an accident involving a nuclear reactor or radioactive materials, either in use or in shipment, could result in release of radioactivity in such manner and quantity as to be hazardous to the public.'

'For example, an incident might result from the involvement in a traffic accident of a truck carrying radioactive materials. Although containers for radioactive materials in shipment are designed to withstand most accidents of this type, a rupture of the container could result in radioactive material escaping to the surrounding environment.'

'For some time the Commission has had in readiness at its various installations radiological personnel for use in helping to protect the public in the event of such incidents. They are trained and equipped to monitor radioactive materials and advise local officials and physicians on the extent of radiation hazards and the steps that should be taken for the further protection of public health and safety...'

"The personnel, who would be furnished immediately on request of state officials, could include scientists, engineers and physicians, as appropriate, who have had training and experience in handling nuclear materials.

"These teams would be drawn from the Commission staff and from the staffs of major contractors.

"Oak Ridge Operations, a major field office of the Commission, is responsible for assistance to officials in an eight-state area which includes Arkansas, Kentucky, Louisiana, Mississippi, Missouri, Tennessee, Virginia and West Virginia, and Puerto Rico and the Virgin Islands.

"Sapirie said that in event of a major radiation incident, state and local authorities may request advice or assistance by calling the AEC at Oak Ridge, Tennessee (telephone no. 5-8611, extension 7989)."

Edgar M. Sites
Colonel
State Director

APPENDIX J

BIBLIOGRAPHY

Atomic Energy Commission, "Standards for Protection against Radiation" Federal Register, Title 10, Part 20, as amended through July 30, 1958. Also, "Statement of Proposed Rule Making", dated April 24, 1959.

N.B.S.* Handbook 42, "Safe Handling of Radioactive Isotopes" (1949).

N.B.S. Handbook 48, "Control and Removal of Radioactive Contamination in Laboratories" (1951).

N.B.S. Handbook 50, "X-Ray Protection Design" (1952).

N.B.S. Handbook 51, "Radiological Monitoring Methods and Instruments" (1952).

N.B.S. Handbook 52, "Maximum Permissible Amounts of Radioisotopes in the Human Body and Maximum Permissible Concentrations in Air and Water" (1953).

N.B.S. Handbook 53, "Recommendations for Disposal of Carbon^{14} Wastes" (1953).

N.B.S. Handbook 54, "Protection Against Radiation from Radium, Cobalt-60 and Cesium-137" (1953).

N.B.S. Handbook 57, "Photographic Dosimetry of X- and Gamma Rays" (1954).

N.B.S. Handbook 59, "Permissible Dose from External Sources of Ionizing Radiation", (1954) includes 1958 Addendum.

N.B.S. Handbook 60, "X-Ray Protection" (includes 1957 Addendum, supersedes Handbook 41).

N.B.S. Handbook 61, "Regulation of Radiation Exposure by Legislative Means" (1955).

N.B.S. Handbook 62, "Report of the International Commission on Radiological Units and Measurements (ICRU)", 1956 (Supercedes Handbook 47).

N.B.S. Handbook 63, "Protection Against Neutron Radiation up to 30 Million Electron Volts" (1957).

N.B.S. Handbook 66, "Safe Design and Use of Industrial Beta-Ray Sources" (1958).

N.B.S. Circular 476, "Measurements of Radioactivity".

*National Bureau of Standards publications for sale from the U.S. Government Printing Office.

"Radiation Protection" by Carl B. Braestrup and Harold O. Wyckoff, Charles C. Thomas, Publisher, Springfield, Illinois, 1958.

"Nuclear Radiation Physics" by R. E. Lapp and H. L. Andrews, Prentice Hall, Inc., New York, 2nd Edition, 1954.

"Sourcebook on Atomic Energy" - Samuel Glasstone - D. Van Nostrand Co., Inc., Princeton, N. J., 2nd Edition, 1958.

TID-3511 "Bibliography on Uses of Radioactive and Stable Isotopes in Industry", 1957, Technical Information Service Extension, AEC, Oak Ridge, Tenn.

Atomic Energy Commission, "Handbook of Federal Regulations Applying to Transportation of Radioactive Materials" (1955). Available from Superintendent of Documents, U.S. Government Printing Office.

American Institute of Physics Handbook, D. E. Gray, coord. ed., McGraw-Hill Book Company, Inc., New York (1957).

"Radiological Health Handbook", S. Kinsman, U.S. Department of Health, Education, and Welfare, Publication No. PB 121784 (1957).

"Radiation Shielding", Price, Horton, and Spinney, Pergamon Press, N.Y. (1957).

Los Alamos Handbook for Radiation Monitoring, AEC, U.S. Government Printing Office, Washington, D.C., 3rd Edition, 1958, Publication No. LA 1835.

dww