The generic safety analyses contained in the HI-STORM 100 FSAR may be used as input and for guidance by the licensee in performing a 10CFR72.212 evaluation.

Within this report, all figures, tables and references cited are identified by the double decimal system m.n.i, where m is the chapter number, n is the section number, and i is the sequential number. Thus, for example, Figure 1.2.3 is the third figure in Section 1.2 of Chapter 1.

Revisions to this document are made on a section level basis. Complete sections have been replaced if any material in the section changed. The specific changes are noted with revision bars in the right margin. Figures are revised individually. Drawings are controlled separately within the Holtec QA program and have individual revision numbers. Bills-of-Material (BOMs) are considered separate drawings and are not necessarily at the same revision level as the drawing(s) to which they apply. If a drawing or BOM was revised in support of the current FSAR revision, that drawing/BOM is included in Section 1.5 at its latest revision level. Drawings and BOMs appearing in this FSAR may be revised between formal updates to the FSAR. Therefore, the revisions of drawings/BOMs in Section 1.5 may not be current.

The HI-STORM 100 System has been expanded slightly to include options specific for Indian Point Unit 1. The affected components are the MPC enclosure vessel, MPC-32 and MPC-32F, HI-STORM 100S Version B and HI-TRAC 100D. Information pertaining to these changes is generally contained in supplements to each chapter identified by a Roman numeral "II" (i.e. Chapter 1 and Supplement 1.II). Certain sections of the main FSAR are also affected and are appropriately modified for continuity with the "II" supplements. Unless superseded or specifically modified by information in the "II" supplements, the information in the main FSAR chapters is applicable to the HI-STORM 100 System at Indian Point Unit 1.

1.0.1 Engineering Change Orders

The changes authorized by the Holtec ECOs (with corresponding 10CFR72.48 evaluations, if applicable) listed in the following table are reflected in Revision 5 of this FSAR.

overpack or HI-STAR storage/transportation overpack. The HI-TRAC shields the loaded MPC allowing loading operations to be performed while limiting radiation exposure to personnel. HI-TRAC is an acronym for **H**oltec **I**nternational **Tra**nsfer **C**ask. In this FSAR there are several HI-TRAC transfer casks, the 125-ton standard design HI-TRAC (HI-TRAC-125), the 125-ton dual-purpose lid design (HI-TRAC 125D), the 100-ton HI-TRAC (HI-TRAC-100)*,* ~~and~~ the 100-ton dual purpose lid design (HI-TRAC 100D*), and the 75-ton dual purpose lid design for Indian Point 1(HI-TRAC 100D Version IP1*). The 100-ton HI-TRAC is provided for use at sites with a maximum crane capacity of less than 125 tons. The term HI-TRAC is used as a generic term to refer to all HI-TRAC transfer cask designs, unless the discussion requires distinguishing among the designs. The HI-TRAC is equipped with a pair of lifting trunnions and the HI-TRAC 100 and HI-TRAC 125 designs also include pocket trunnions. The trunnions are used to lift and downend/upend the HI-TRAC with a loaded MPC.

HI-STORM overpack or storage overpack means the cask that receives and contains the sealed multi-purpose canisters containing spent nuclear fuel. It provides the gamma and neutron shielding, ventilation passages, missile protection, and protection against natural phenomena and accidents for the MPC. The term "overpack" as used in this FSAR refers to all overpack designs, including the standard design (HI-STORM 100) and two alternate designs (HI-STORM 100S and HI-STORM 100S Version B). The term "overpack" also applies to those overpacks designed for high seismic deployment (HI-STORM 100A or HI-STORM 100SA), unless otherwise clarified.

HI-STORM 100 System consists of any loaded MPC model placed within any design variant of the HI-STORM overpack.

Holtite*TM* is the trade name for all present and future neutron shielding materials formulated under Holtec International's R&D program dedicated to developing shielding materials for application in dry storage and transport systems. The Holtite development program is an ongoing experimentation effort to identify neutron shielding materials with enhanced shielding and temperature tolerance characteristics. Holtite-A™ is the first and only shielding material qualified under the Holtite R&D program. As such, the terms Holtite and Holtite-A may be used interchangeably throughout this FSAR.

Holtite™-A is a trademarked Holtec International neutron shield material.

Important to Safety (ITS) means a function or condition required to store spent nuclear fuel safely; to prevent damage to spent nuclear fuel during handling and storage, and to provide reasonable assurance that spent nuclear fuel can be received, handled, packaged, stored, and retrieved without undue risk to the health and safety of the public.

Independent Spent Fuel Storage Installation (ISFSI) means a facility designed, constructed, and licensed for the interim storage of spent nuclear fuel and other radioactive materials associated with spent fuel storage in accordance with 10CFR72.

HOLTEC INTERNATIONAL COPYRIGHTED MATERIAL

Table 1.0.1 (continued)

TERMINOLOGY AND NOTATION

Intact Fuel Assembly is defined as a fuel assembly without known or suspected cladding defects greater than pinhole leaks and hairline cracks, and which can be handled by normal means. Fuel assemblies without fuel rods in fuel rod locations shall not be classified as Intact Fuel Assemblies unless dummy fuel rods are used to displace an amount of water greater than or equal to that displaced by the fuel rod(s).

License Life means the duration for which the system is authorized by virtue of its certification by the U.S. NRC.

Long-term Storage means the time beginning after on-site handling is complete and the loaded overpack is at rest in its designated storage location on the ISFSI pad and lasting up to the end of the licensed life of the HI-STORM 100 System (20 years).

Lowest Service Temperature (LST) is the minimum metal temperature of a part for the specified service condition.

Maximum Reactivity means the highest possible k-effective including bias, uncertainties, and calculational statistics evaluated for the worst-case combination of fuel basket manufacturing tolerances.

METAMIC® is a trade name for an aluminum/boron carbide composite neutron absorber material qualified for use in the MPCs.

METCON™ is a trade name for the HI-STORM overpack. The trademark is derived from the **met**al-**con**crete composition of the HI-STORM overpack.

MGDS is an acronym for Mined Geological Disposal System.

Minimum Enrichment is the minimum assembly average enrichment. Natural uranium blankets are not considered in determining minimum enrichment.

Moderate Burnup Fuel, or MBF is a commercial spent fuel assembly with an average burnup less than or equal to 45,000 MWD/MTU.

Multi-Purpose Canister (MPC) means the sealed canister consisting of a honeycombed fuel basket for spent nuclear fuel storage, contained in a cylindrical canister shell (the MPC Enclosure Vessel). There are different MPCs with different fuel basket geometries for storing PWR or BWR fuel, but all MPCs have identical exterior *diameters*~~dimensions~~. The MPC is the confinement boundary for storage conditions.

NDT is an acronym for Nil Ductility Transition Temperature, which is defined as the temperature at which the fracture stress in a material with a small flaw is equal to the yield stress in the same material if it had no flaws.

1.1 INTRODUCTION

HI-STORM 100 (acronym for Holtec International Storage and Transfer Operation Reinforced Module) is a spent nuclear fuel storage system designed to be in full compliance with the requirements of 10CFR72. The annex "100" is a model number designation which denotes a system weighing over 100 tons. The HI-STORM 100 System consists of a sealed metallic canister, herein abbreviated as the "MPC", contained within an overpack. Its design features are intended to simplify and reduce on-site SNF loading, handling, and monitoring operations, and to provide for radiological protection and maintenance of structural and thermal safety margins.

The HI-STORM 100S and HI-STORM 100S Version B overpack designs are variants of the HI-STORM 100 overpack design and have their own drawings in Section 1.5. The "S" suffix indicates an enhanced overpack design, as described later in this section. "Version B" indicates an enhanced HI-STORM 100S overpack design. The HI-STORM 100S and 100S Version B accept the same MPCs and fuel types as the HI-STORM 100 overpack and the basic structural, shielding, and thermal-hydraulic characteristics remain unchanged. Hereafter in this FSAR reference to HI-STORM 100 System or the HI-STORM overpack is construed to apply to the HI-STORM 100, the HI-STORM 100S, and the HI-STORM 100S Version B. Where necessary, the text distinguishes among the three overpack designs. See Figures 1.1.1A and 1.1.3A for pictorial views of the HI-STORM 100S overpack design. See Figures 1.1.1B and 1.1.3B for pictorial views of the HI-STORM 100S Version B design.

The HI-STORM 100A overpack is a variant of two of the three HI-STORM 100 System overpack designs and is specially outfitted with an extended baseplate and gussets to enable the overpack to be anchored to the ISFSI pad in high seismic applications. In the following, the modified structure of the HI-STORM 100A, in each of four quadrants, is denoted as a "sector lug." The HI-STORM 100A anchor design is applicable to the HI-STORM 100S overpack design, in which case the assembly would be named HI-STORM 100SA. The HI-STORM 100A anchor design is not applicable to the HI-STORM 100S Version B overpack design. Therefore, the HI-STORM 100S Version B overpack cannot be deployed in the anchored configuration at this time. Hereafter in the text, discussion of HI-STORM 100A applies to both the standard (HI-STORM 100A) and HI-STORM 100SA overpacks, unless otherwise clarified.

The HI-STORM 100 System is designed to accommodate a wide variety of spent nuclear fuel assemblies in a single basic overpack design by utilizing different MPCs. The external ~~dimensions~~ *diameters* of all MPCs are identical to allow the use of a single overpack. Each of the MPCs has different internals (baskets) to accommodate distinct fuel characteristics. Each MPC is identified by the maximum quantity of fuel assemblies it is capable of receiving. The MPC-24, MPC-24E, and MPC-24EF contain a maximum of 24 PWR fuel assemblies; the MPC-32 and MPC-32F contain a maximum of 32 PWR fuel assemblies; and the MPC-68, MPC-68F, and MPC-68FF contain a maximum of 68 BWR fuel assemblies.

The HI-STORM overpack is constructed from a combination of steel and concrete, both of which are materials with long, proven histories of usage in nuclear applications. The HI-STORM overpack incorporates and combines many desirable features of previously-approved concrete and metal

HOLTEC INTERNATIONAL COPYRIGHTED MATERIAL

The modularity of the HI-STORM 100 System accrues several advantages. Different MPCs, identical in ~~exterior dimensions~~*external diameter*, manufacturing requirements, and handling features, but different in their SNF arrangement details, are designed to fit a common overpack *design*. Even though the different MPCs have fundamentally identical design and manufacturing attributes, qualification of HI-STORM 100 requires consideration of the variations in the characteristics of the MPCs. In most cases, however, it is possible to identify the most limiting MPC geometry and the specific loading condition for the safety evaluation, and the detailed analyses are then carried out for that bounding condition. In those cases where this is not possible, multiple parallel analyses are performed.

The HI-STORM overpack is not engineered for transport and, therefore, will not be submitted for 10CFR Part 71 certification. HI-STORM 100, however, is designed to possess certain key elements of flexibility.

For example:

- The HI-STORM overpack is stored at the ISFSI pad in a vertical orientation, which helps minimize the size of the ISFSI and leads to an effective natural convection cooling flow around the MPC.

- The HI-STORM overpack can be loaded with a loaded MPC using the HI-TRAC transfer cask inside the 10CFR50 [1.1.4] facility, prepared for storage, transferred to the ISFSI, and stored in a vertical configuration, or directly loaded using the HI-TRAC transfer cask at or nearby the ISFSI storage pad.

The version of the HI-STORM overpack equipped with sector lugs to anchor it to the ISFSI pad is labeled HI-STORM 100A, shown in Figure 1.1.4. Figure 1.1.5 shows the sector lugs and anchors used to fasten the overpack to the pad in closer view. Details on HI-STORM 100A are presented in the drawing and BOM contained in Section 1.5. Users may employ a double nut arrangement as an option. The HI-STORM 100A overpack will be deployed at those ISFSI sites where the postulated seismic event (defined by the three orthogonal ZPAs) exceeds the maximum limit permitted for free-standing installation. The design of the ISFSI pad and the embedment are necessarily site-specific and the responsibility of the ISFSI owner. These designs shall be in accordance with the requirements specified in Appendix 2.A. The jurisdictional boundary between the anchored cask design and the embedment design is defined in Table 2.0.5. Additional description of the HI-STORM 100A configuration is provided in Subsection 1.2.1.2.1. The anchored design is applicable to the HI-STORM 100 and the HI-STORM 100S overpack designs only.

The MPC is a multi-purpose SNF storage device both with respect to the type of fuel assemblies and its versatility of use. The MPC is engineered as a cylindrical prismatic structure with square cross section storage cavities. The number of storage locations depends on the type of fuel. Regardless of the storage cell count, the construction of the MPC is fundamentally the same; it is built as a honeycomb of cellular elements positioned within a circumscribing cylindrical canister shell. The manner of cell-to-cell weld-up and cell-to-canister shell interface employed in the MPC imparts extremely high structural stiffness to the assemblage, which is an important attribute for

HOLTEC INTERNATIONAL COPYRIGHTED MATERIAL

mechanical accident events. Figure 1.1.2 shows an elevation cross section of an MPC.

The MPC enclosure vessel is identical *in external diameter* to those presented in References [1.1.2] and [1.1.3]. However, certain fuel basket models may not be certified for storage or transportation in the HI-STAR 100 System. The Part 71 and 72 CoCs for HI-STAR 100 should be consulted for the MPC models that are certified for that system. Referencing these documents, as applicable, avoids repetition of information on the MPCs which is comprehensively set forth in the above-mentioned Holtec International documents docketed with the NRC. However, sufficient information and drawings are presented in this report to maintain clarity of exposition of technical data.

The HI-STORM storage overpack is designed to provide the necessary neutron and gamma shielding to comply with the provisions of 10CFR72 for dry storage of SNF at an ISFSI. Cross sectional views of the HI-STORM storage overpacks are presented in Figures 1.1.3, 1.1.3A, and 1.1.3B. A HI-TRAC transfer cask is required for loading of the MPC and movement of the loaded MPC from the cask loading area of a nuclear plant spent fuel pool to the storage overpack. The HI-TRAC is engineered to be emplaced with an empty MPC into the cask loading area of nuclear plant spent fuel pools for fuel loading (or unloading). The HI-TRAC/MPC assembly is designed to preclude intrusion of pool water into the narrow annular space between the HI-TRAC and the MPC while the assembly is submerged in the pool water. The HI-TRAC transfer cask also allows dry loading (or unloading) of SNF into the MPC.

To summarize, the HI-STORM 100 System has been engineered to:

- minimize handling of the SNF;
- provide shielding and physical protection for the MPC;
- permit rapid and unencumbered decommissioning of the ISFSI;
- require minimal ongoing surveillance and maintenance by plant staff;
- minimize dose to operators during loading and handling;
- allow transfer of the loaded MPC to a HI-STAR overpack for transportation.

HOLTEC INTERNATIONAL COPYRIGHTED MATERIAL

1.2 GENERAL DESCRIPTION OF HI-STORM 100 System

1.2.1 System Characteristics

The basic HI-STORM 100 System consists of interchangeable MPCs providing a confinement boundary for BWR or PWR spent nuclear fuel, a storage overpack providing a structural and radiological boundary for long-term storage of the MPC placed inside it, and a transfer cask providing a structural and radiological boundary for transfer of a loaded MPC from a nuclear plant spent fuel storage pool to the storage overpack. Figures 1.2.1 and 1.2.1A provide example cross sectional views of the HI-STORM 100 System with an MPC inserted into HI-STORM 100 and HI-STORM 100S storage overpacks, respectively. Figure 1.1.1B provides similar information for the HI-STORM 100 System using a HI-STORM 100S Version B overpack. Each of these components is described below, including information with respect to component fabrication techniques and designed safety features. All structures, systems, and components of the HI-STORM 100 System, which are identified as Important to Safety are specified in Table 2.2.6. This discussion is supplemented with a full set of drawings in Section 1.5.

The HI-STORM 100 System is comprised of three discrete components:

i. multi-purpose canister (MPC)
ii. storage overpack (HI-STORM)
iii. transfer cask (HI-TRAC)

Necessary auxiliaries required to deploy the HI-STORM 100 System for storage are:

i. vacuum drying (or other moisture removal) system
ii. helium (He) backfill system with leakage detector (or other system capable of the same backfill condition)
iii. lifting and handling systems
iv welding equipment
v. transfer vehicles/trailer

All MPCs have identical *external diameters* ~~exterior dimensions that render them interchangeable~~. The outer diameter of the MPC is 68-3/8 inches[†] and the *maximum* overall length is 190-1/2 inches. See Section 1.5 for the MPC drawings. Due to the differing storage contents of each MPC, the maximum loaded weight differs among MPCs. See Table 3.2.1 for each MPC weight. However, the maximum weight of a loaded MPC is approximately 44-1/2 tons. Tables 1.2.1 and 1.2.2 contain the key system data and parameters for the MPCs.

[†] Dimensions discussed in this section are considered nominal values.

A single, base HI-STORM overpack design is provided which is capable of storing each type of MPC. The overpack inner cavity is sized to accommodate the MPCs. The inner diameter of the overpack inner shell is 73-1/2 inches and the height of the cavity is 191-1/2 inches. The overpack inner shell is provided with channels distributed around the inner cavity to present an inside diameter of 69-1/2 inches. The channels are intended to offer a flexible medium to absorb some of the impact during a non-mechanistic tip-over, while still allowing the cooling air flow through the ventilated overpack. The outer diameter of the overpack is 132-1/2 inches. The overall height of the HI-STORM 100 overpack is 239-1/2 inches.

There are two variants of the HI-STORM 100S overpack, differing from each other only in height and weight. The HI-STORM 100S(232) is 232 inches high, and the HI-STORM 100S(243) is 243 inches high. The HI-STORM 100S(243) is approximately 10,100 lbs heavier assuming standard density concrete. Hereafter in the text, these two versions of the HI-STORM 100S overpack will only be referred to as HI-STORM 100S and will be discussed separately only if the design feature being discussed is different between the two overpacks. See Section 1.5 for drawings.

There are also ~~two~~ variants of the HI-STORM 100S Version B overpack, differing from each other only in height and weight. The HI-STORM 100S-218 is 218 inches high, and the HI-STORM 100S-229 is 229 inches high. The HI-STORM 100S-229 is approximately 8,700 lbs heavier, including standard density concrete. Hereafter in the text, the~~se two~~ versions of the HI-STORM 100S Version B overpack will only be referred to as HI-STORM 100S Version B and will be discussed separately only if the design feature being discussed is different between the ~~two~~ overpacks. See Section 1.5 for drawings.

The weight of the overpack without an MPC varies from approximately 135 tons to 160 tons. See Table 3.2.1 for the detailed weights.

Before proceeding to present detailed physical data on the HI-STORM 100 System, it is of contextual importance to summarize the design attributes which enhance the performance and safety of the system. Some of the principal features of the HI-STORM 100 System which enhance its effectiveness as an SNF storage device and a safe SNF confinement structure are:

- the honeycomb design of the MPC fuel basket;
- the effective distribution of neutron and gamma shielding materials within the system;
- the high heat dissipation capability;
- engineered features to promote convective heat transfer;
- the structural robustness of the steel-concrete-steel overpack construction.

HOLTEC INTERNATIONAL COPYRIGHTED MATERIAL

The honeycomb design of the MPC fuel baskets renders the basket into a multi-flange plate weldment where all structural elements (i.e., box walls) are arrayed in two orthogonal sets of plates. Consequently, the walls of the cells are either completely co-planar (i.e., no offset) or orthogonal with each other. There is complete edge-to-edge continuity between the contiguous cells.

Among the many benefits of the honeycomb construction is the uniform distribution of the metal mass of the basket over the entire length of the basket. Physical reasoning suggests that a uniformly distributed mass provides a more effective shielding barrier than can be obtained from a nonuniform basket. In other words, the honeycomb basket is a most effective radiation attenuation device. The complete cell-to-cell connectivity inherent in the honeycomb basket structure provides an uninterrupted heat transmission path, making the MPC an effective heat rejection device.

The composite shell construction in the overpack, steel-concrete-steel, allows ease of fabrication and eliminates the need for the sole reliance on the strength of concrete.

A description of each of the components is provided in the following sections, along with information with respect to its fabrication and safety features. This discussion is supplemented with the full set of drawings in Section 1.5.

1.2.1.1 Multi-Purpose Canisters

The MPCs are welded cylindrical structures as shown in cross sectional views of Figures 1.2.2 through 1.2.4. The outer diameter ~~and cylindrical height~~ of each MPC ~~are~~ *is* fixed. Each spent fuel MPC is an assembly consisting of a honeycombed fuel basket, a baseplate, canister shell, a lid, and a closure ring, as depicted in the MPC cross section elevation view, Figure 1.2.5. The number of spent nuclear fuel storage locations in each of the MPCs depends on the fuel assembly characteristics.

There are eight MPC models, distinguished by the type and number of fuel assemblies authorized for loading. Section 1.2.3 and Table 1.2.1 summarize the allowable contents for each MPC model. Section 2.1.9 provides the detailed specifications for the contents authorized for storage in the HI-STORM 100 System. Drawings for the MPCs are provided in Section 1.5.

The MPC provides the confinement boundary for the stored fuel. Figure 1.2.6 provides an elevation view of the MPC confinement boundary. The confinement boundary is defined by the MPC baseplate, shell, lid, port covers, and closure ring. The confinement boundary is a strength-welded enclosure of all stainless steel construction.

The PWR MPC-24, MPC-24E and MPC-24EF differ in construction from the MPC-32 (including the MPC-32F) and the MPC-68 (including the MPC-68F and MPC-68FF) in one important aspect: the fuel storage cells in the MPC-24 series are physically separated from one another by a "flux trap", for criticality control. The PWR MPC-32 and -32F are designed similar to the MPC-68 (without flux traps) and its design includes credit for soluble boron in the MPC water during wet fuel loading and unloading operations for criticality control.

HOLTEC INTERNATIONAL COPYRIGHTED MATERIAL

The plain concrete between the overpack inner and outer steel shells is specified to provide the necessary shielding properties (dry density) and compressive strength. The concrete shall be in accordance with the requirements specified in Appendix 1.D.

The principal function of the concrete is to provide shielding against gamma and neutron radiation. However, in an implicit manner it helps enhance the performance of the HI-STORM overpack in other respects as well. For example, the massive bulk of concrete imparts a large thermal inertia to the HI-STORM overpack, allowing it to moderate the rise in temperature of the system under hypothetical conditions when all ventilation passages are assumed to be blocked. The case of a postulated fire accident at the ISFSI is another example where the high thermal inertia characteristics of the HI-STORM concrete control the temperature of the MPC. Although the annular concrete mass in the overpack shell is not a structural member, it does act as an elastic/plastic filler of the inter-shell space, such that, while its cracking and crushing under a tip-over accident is not of significant consequence, its deformation characteristics are germane to the analysis of the structural members.

Density and compressive strength are the key parameters that delineate the performance of concrete in the HI-STORM System. The density of concrete used in the inter-shell annulus, pedestal (HI-STORM 100 and –100S overpacks only), and overpack lid has been set as defined in Appendix 1.D. For evaluating the physical properties of concrete for completing the analytical models, conservative formulations of Reference [1.0.5] are used.

To ensure the stability of the concrete at temperature, the concrete composition has been specified in accordance with NUREG-1536, "Standard Review Plan for Dry Cask Storage Systems" [1.0.3]. Thermal analyses, presented in Chapter 4, show that the temperatures during normal storage conditions do not threaten the physical integrity of the HI-STORM overpack concrete.

There are three base HI-STORM overpack designs - HI-STORM 100, HI-STORM 100S, and HI-STORM 100S Version B. The significant differences among the three are overpack height, MPC pedestal height, location of the air outlet ducts, and the vertical alignment of the inlet and outlet air ducts. The HI-STORM 100 overpack is approximately 240 inches high from the bottom of the baseplate to the top of the lid bolts and 227 inches high without the lid installed. There are two variants of the HI-STORM 100S overpack design, differing only in height and weight. The HI-STORM 100S(232) is approximately 232 inches high from the bottom of the baseplate to the top of the lid in its final storage configuration and approximately 211 inches high without the lid installed. The HI-STORM 100S(243) is approximately 243 inches high from the bottom of the baseplate to the top of the lid in its final storage configuration and approximately 222 inches high without the lid installed. There are also ~~two~~ variants of the HI-STORM 100S Version B overpack design, differing only in height and weight. The HI-STORM 100S-218 is approximately 218 inches high from the bottom of the baseplate to the top of the lid in its final storage configuration and approximately 199 inches high without the lid installed. The HI-STORM 100S-229 is approximately 229 inches high from the bottom of the baseplate to the top of the lid in its final storage configuration and 210 inches high without the lid installed.

The HI-STORM 100S Version B overpack design does not include a concrete-filled pedestal to support the MPC. Instead, the MPC rests upon a steel plate that maintains the MPC sufficiently

HOLTEC INTERNATIONAL COPYRIGHTED MATERIAL

Table 1.2.1

KEY SYSTEM DATA FOR HI-STORM 100 SYSTEM

ITEM	QUANTITY	NOTES
Types of MPCs included in this revision of the submittal	8	5 for PWR 3 for BWR
MPC storage capacity†:	MPC-24 MPC-24E MPC-24EF	Up to 24 intact ZR or stainless steel clad PWR fuel assemblies with or without non-fuel hardware. Up to four damaged fuel assemblies may be stored in the MPC-24E and up to four (4) damaged fuel assemblies and/or fuel assemblies classified as fuel debris may be stored in the MPC-24EF OR
	MPC-32 MPC-32F *(See Note 1 on next page)*	Up to 32 intact ZR or stainless steel clad PWR fuel assemblies with or without non-fuel hardware. Up to 8 damaged fuel assemblies may be stored in the MPC-32 and up to 8 damaged fuel assemblies and/or fuel assemblies classified as fuel debris may be stored in the MPC-32F.
	MPC-68	Any combination of Dresden Unit 1 or Humboldt Bay damaged fuel assemblies in damaged fuel containers and intact fuel assemblies, up to a total of 68. For damaged fuel other than Dresden Unit 1 and Humboldt Bay, the number of fuel assemblies is limited to 16, with the balance being intact fuel assemblies. OR

† See Section 2.1 for a complete description of authorized cask contents and fuel specifications.

Table 1.2.1 (continued)
KEY SYSTEM DATA FOR HI-STORM 100 SYSTEM

ITEM	QUANTITY	NOTES
MPC storage capacity:	MPC-68F	Up to 4 damaged fuel containers with ZR clad Dresden Unit 1 (D-1) or Humboldt Bay (HB) BWR fuel debris and the complement damaged ZR clad Dresden Unit 1 or Humboldt Bay BWR fuel assemblies in damaged fuel containers or intact Dresden Unit 1 or Humboldt Bay BWR intact fuel assemblies. OR
	MPC-68FF	Up to 68 Dresden Unit 1 or Humboldt Bay intact fuel or damaged fuel and up to 8 damaged fuel containers containing D-1 or HB fuel debris. For other BWR plants, up to 16 damaged fuel containers containing BWR damaged fuel and/or fuel debris with the complement intact fuel assemblies, up to a total of 68. The number of damaged fuel containers containing BWR fuel debris is limited to eight (8) for all BWR plants.

Notes:

1. *The stated information does not apply to the Indian Point Unit 1 MPC-32s. Supplement 1.II provides the storage capacity for the IP1 MPC-32s.*

HOLTEC INTERNATIONAL COPYRIGHTED MATERIAL

Table 1.2.2 (cont'd)

KEY PARAMETERS FOR HI-STORM 100 MULTI-PURPOSE CANISTERS

	PWR	BWR
MPC internal environment Helium fill (99.995% fill helium purity) MPC-24 (heat load ≤ 27.77 kW) MPC-24E/24EF (heat load ≤ 28.17 kW) MPC-68/68F/68FF (heat load ≤ 28.19 kW) MPC-32/32F (heat load ≤ 28.74 kW) *(See Note 2)*	(all pressure ranges are at a reference temperature of 70°F) ≥ 29.3 psig and ≤ 33.3 psig OR 0.1212 +/-10% g-moles/liter ≥ 29.3 psig and ≤ 33.3 psig OR 0.1212 +/-10% g-moles/liter ≥ 29.3 psig and ≤ 33.3 psig OR 0.1212 +/-10% g-moles/liter	(all pressure ranges are at a reference temperature of 70°F) ≥ 29.3 psig and ≤ 33.3 psig OR 0.1218 +/-10% g-moles/liter
Maximum permissible multiplication factor (k_{eff}) including all uncertainties and biases	< 0.95	< 0.95
Fixed Neutron Absorber ^{10}B Areal Density (g/cm^2) Boral/Metamic	0.0267/0.0223 (MPC-24) 0.0372/0.0310 (MPC-24E, MPC-24EF MPC-32 & MPC-32F)	0.0372/0.0310 (MPC-68 & MPC-68FF) 0.01/NA (MPC-68F) (See Note 1)
End closure(s)	Welded	Welded
Fuel handling	Opening compatible with standard grapples	Opening compatible with standard grapples
Heat dissipation	Passive	Passive

NOTES:

1. All MPC-68F canisters are equipped with Boral neutron absorber.
2. *The stated requirements do not apply to the Indian Point Unit 1 MPC-32s. Supplement 1.II provides Helium fill requirements for Indian Point Unit 1 MPC-32s.*

HOLTEC INTERNATIONAL COPYRIGHTED MATERIAL

1.5 DRAWINGS

The following HI-STORM 100 System drawings and bills of materials are provided on subsequent pages in this subsection:

Drawing Number/Sheet	Description	Rev.
3923	MPC Enclosure Vessel	*15-Draft** ~~16~~
3925	MPC-24E/EF Fuel Basket Assembly	7
3926	MPC-24 Fuel Basket Assembly	9
3927	MPC-32 Fuel Basket Assembly	*10 Draft** ~~12~~
3928	MPC-68/68F/68FF Basket Assembly	11
1495 Sht 1/6	HI-STORM 100 Assembly	13
1495 Sht 2/6	Cross Section "Z" - "Z" View of HI-STORM	18
1495 Sht 3/6	Section "Y" - "Y" of HI-STORM	12
1495 Sht 4/6	Section "X" -"X" of HI-STORM	13
1495 Sht 5/6	Section "W" -"W" of HI-STORM	15
1561 Sht 1/6	View "A" -"A" of HI-STORM	11
1561 Sht 2/6	Detail "B" of HI-STORM	15
1561 Sht 3/6	Detail of Air Inlet of HI-STORM	11
1561 Sht 4/6	Detail of Air Outlet of HI-STORM	12
3669	HI-STORM 100S Assembly	15
1880 Sht 1/10	125 Ton HI-TRAC Outline with Pool Lid	9
1880 Sht 2/10	125 Ton HI-TRAC Body Sectioned Elevation	10
1880 Sht 3/10	125 Ton HI-TRAC Body Sectioned Elevation "B" - "B"	9
1880 Sht 4/10	125 Ton Transfer Cask Detail of Bottom Flange	10
1880 Sht 5/10	125 Ton Transfer Cask Detail of Pool Lid	10
1880 Sht 6/10	125 Ton Transfer Cask Detail of Top Flange	10
1880 Sht 7/10	125 Ton Transfer Cask Detail of Top Lid	9
1880 Sht 8/10	125 Ton Transfer Cask View "Y" - "Y"	9
1880 Sht 9/10	125 Ton Transfer Cask Lifting Trunnion and Locking Pad	7
1880 Sht 10/10	125 Ton Transfer Cask View "Z" - "Z"	9
1928 Sht 1/2	125 Ton HI-TRAC Transfer Lid Housing Detail	11
1928 Sht 2/2	125 Ton HI-TRAC Transfer Lid Door Detail	10
2145 Sht 1/10	100 Ton HI-TRAC Outline with Pool Lid	8
2145 Sht 2/10	100 Ton HI-TRAC Body Sectioned Elevation	8
2145 Sht 3/10	100 Ton HI-TRAC Body Sectioned Elevation 'B-B'	8
2145 Sht 4/10	100 Ton HI-TRAC Detail of Bottom Flange	7

** Revision 5 of the FSAR contains the following drawings: 3923 Rev. 16, 3927 Rev. 12, and 4116 Rev. 17. This LAR 1014-5 submittal contains earlier draft drawings as shown with the IP-1 specific changes identified. These changes will be incorporated into the latest revision of the drawings upon approval of the LAR 1014-5.*

HOLTEC INTERNATIONAL COPYRIGHTED MATERIAL

Drawing Number/Sheet	Description	Rev.
2145 Sht 5/10	100 Ton HI-TRAC Detail of Pool Lid	6
2145 Sht 6/10	100 Ton HI-TRAC Detail of Top Flange	8
2145 Sht 7/10	100 Ton HI-TRAC Detail of Top Lid	8
2145 Sht 8/10	100 Ton HI-TRAC View Y-Y	8
2145 Sht 9/10	100 Ton HI-TRAC Lifting Trunnions and Locking Pad	5
2145 Sht 10/10	100 Ton HI-TRAC View Z-Z	7
2152 Sht 1/2	100 Ton HI-TRAC Transfer Lid Housing Detail	10
2152 Sht 2/2	100 Ton HI-TRAC Transfer Lid Door Detail	8
3187	Lug and Anchoring Detail for HI-STORM 100A	2
BM-1575, Sht 1/2	Bill-of-Materials HI-STORM 100 Storage Overpack	19
BM-1575, Sht 2/2	Bill-of-Materials HI-STORM 100 Storage Overpack	19
BM-1880, Sht 1/2	Bill-of-Material for 125 Ton HI-TRAC	9
BM-1880, Sht 2/2	Bill-of-Material for 125 Ton HI-TRAC	7
BM-1928, Sht 1/1	Bill-of-Material for 125 Ton HI-TRAC Transfer Lid	10
BM-2145 Sht 1/2	Bill-of-Material for 100 Ton HI-TRAC	6
BM-2145 Sht 2/2	Bill-of-Material for 100 Ton HI-TRAC	5
BM-2152 Sht 1/1	Bill-of-Material for 100 Ton HI-TRAC Transfer Lid	8
3768	125 Ton HI-TRAC 125D Assembly	7
4116	HI-STORM 100S Version B	*12-Draft** ~~17~~
4128	100 Ton HI-TRAC 100D Assembly	5
4724	*HI-TRAC 100D Version IP1 Assembly*	*0*

** Revision 5 of the FSAR contains the following drawings: 3923 Rev. 16, 3927 Rev. 12, and 4116 Rev. 17. This LAR 1014-5 submittal contains earlier draft drawings as shown with the IP-1 specific changes identified. These changes will be incorporated into the latest revision of the drawings upon approval of the LAR 1014-5.*

HOLTEC INTERNATIONAL COPYRIGHTED MATERIAL

CLIENT	GENERAL		
PROJECT NO.	5014	P.O. NO.	N/A
DRAWING PACKAGE I.D.	3923	TOTAL SHEETS	6

LICENSING DRAWING PACKAGE COVER SHEET

LICENSING DRAWING PACKAGE CONTENTS:

SHEET	DESCRIPTION
1	COVER SHEET
2	MPC ENCLOSURE VESSEL GENERAL ARRANGEMENT
3	MPC ENCLOSURE VESSEL ELEVATION DETAILS
4	MPC ENCLOSURE VESSEL LID DETAILS
5	MPC FUEL SPACER DETAILS
6	MPC SERIAL #1021-040 ENCLOSURE VESSEL LID DETAILS

REVISION LOG

REV	AFFECTED DRAWING SHEET NUMBERS	SUMMARY OF CHANGES/ AFFECTED ECOs	PREPARED BY	APPROVAL DATE	VIR# †
11	ALL	1021-61, REV. 0, 1022-57, REV. 0, 1023-30, REV. 0	S.L.C	9/27/04	89001
12	SHEETS 4 & 6	ECO 5014-117, REV. 0	JJB	04/11/05	79255
13	SHEET 5	ECO 1023-30, REV. 1	S.L.C	04/27/05	67405
14	SHEET 6	ECO 1021-71, REV. 0	JJB	06/17/05	47815
15	SHEETS 1 & 3	DRAFT	JJB	--/--/--	-----

† THE VALIDATION IDENTIFICATION RECORD (VIR) NUMBER IS A COMPUTER GENERATED RANDOM NUMBER WHICH CONFIRMS THAT ALL APPROPRIATE REVIEWS OF THIS DRAWING ARE DOCUMENTED IN COMPANY'S NETWORK.

NOTES CON'T:

11. THIS COMPONENT IS CLASSIFIED AS ITS-A BASED ON THE HIGHEST CLASSIFICATION OF ANY SUBCOMPONENT. SUBCOMPONENT CLASSIFICATIONS ARE PROVIDED IN SAR TABLE 1.3.3 (TRANSPORTATION) AND FSAR TABLE 2.2.6 (STORAGE).
12. DELETED
13. LOCAL GRINDING OF THE MPC SHELL SHALL NOT RESULT IN GREATER THAN 10% LOSS IN BASE METAL THICKNESS OVER ANY AREA WHICH EXCEEDS 4 INCHES IN THE LONGITUDINAL OR CIRCUMFERENTIAL DIRECTION. FOR THE WELD AREA AND ADJACENT BASE METAL, AN ADDITIONAL ALLOWANCE OF 0.02" LOSS IN NOMINAL BASE METAL THICKNESS IS ALLOWED OVER THE ENTIRE LENGTH OF THE WELD. THE SUM OF ALL AREAS OF LOCAL METAL LOSS SHALL NOT EXCEED 10% OF THE OVERALL INSIDE SURFACE AREA OF THE MPC SHELL. FINAL THICKNESSES IN LOCAL AREAS OF GRINDING SHALL BE CONFIRMED BY UT EXAMINATION, AS APPROPRIATE.
14. FOR NON-CODE WELDS, THE PROVISIONS OF EITHER ASME IX OR AWS MAY BE FOLLOWED.
15. TOLERANCES FOR THICKNESS OF ASME CODE MPC ENCLOSURE VESSEL MATERIAL ARE SPECIFIED IN ASME SECTION II.
16. REFER TO THE COMPONENT COMPLETION RECORD (CCR) FOR THE COMPLETE LIST OF APPROVED DESIGN DEVIATIONS FOR EACH INDIVIDUAL SERIAL NUMBER.
17. DIMENSIONS NOTED AS NOMINAL ("NOM.") IN THIS DRAWING ARE FOR INFORMATION ONLY. IN ORDER TO INDICATE THE GENERAL SIZE OF THE COMPONENT OR PART. NOMINAL DIMENSIONS HAVE NO SPECIFIC TOLERANCE, BUT ARE MET THROUGH FABRICATION IN ACCORDANCE WITH OTHER DIMENSIONS THAT ARE TOLERANCED AND INSPECTED. NOMINAL DIMENSIONS ARE NOT SPECIFICALLY VERIFIED DURING THE FABRICATION PROCESS.
18. (15) DIFFERENCES BETWEEN THE GENERIC MPC ENCLOSURE VESSEL AND THE IP1 MPC ENCLOSURE VESSEL ARE SPECIFICALLY NOTED (FOR PART 72 USE ONLY).

GENERAL NOTES:

1. THE EQUIPMENT DESIGN DOCUMENTED IN THIS DRAWING PACKAGE HAS BEEN CONFIRMED BY HOLTEC INTERNATIONAL TO COMPLY WITH THE SAFETY ANALYSES DESCRIBED IN THE SAFETY ANALYSIS REPORT.
2. DIMENSIONAL TOLERANCES ON THIS DRAWING ARE PROVIDED TO ENSURE THAT THE EQUIPMENT DESIGN IS CONSISTENT WITH THE SUPPORTING ANALYSES. HARDWARE IS FABRICATED IN ACCORDANCE WITH THE DESIGN DRAWINGS, WHICH MAY HAVE MORE RESTRICTIVE TOLERANCES, TO ENSURE COMPONENT FIT-UP. DO NOT USE WORST-CASE TOLERANCE STACK-UP FROM THIS DRAWING TO DETERMINE COMPONENT FIT-UP.
3. THE REVISION LEVEL OF EACH INDIVIDUAL SHEET IN THIS PACKAGE IS THE SAME AS THE REVISION LEVEL OF THIS COVER SHEET. A REVISION TO ANY SHEET(S) IN THIS PACKAGE REQUIRES UPDATING OF REVISION NUMBERS OF ALL SHEETS TO THE NEXT REVISION NUMBER.
4. THE ASME BOILER AND PRESSURE VESSEL CODE (ASME CODE), 1995 EDITION WITH ADDENDA THROUGH 1997 IS THE GOVERNING CODE FOR THE MPC ENCLOSURE VESSEL, WITH CERTAIN APPROVED ALTERNATIVES AS LISTED IN SAR TABLE 1.3.2 (TRANSPORTATION) AND FSAR TABLE 2.2.15 (STORAGE). THE MPC ENCLOSURE VESSEL IS CONSTRUCTED IN ACCORDANCE WITH ASME SECTION III, SUBSECTION NB WITH CERTAIN APPROVED CODE ALTERNATIVES AS DESCRIBED IN THE SAR (TRANSPORTATION) AND FSAR (STORAGE). NEW OR REVISED ASME CODE ALTERNATIVES REQUIRE PRIOR NRC APPROVAL BEFORE IMPLEMENTATION.
5. ALL MPC ENCLOSURE VESSEL STRUCTURAL MATERIALS ARE "ALLOY X" UNLESS OTHERWISE NOTED. ALLOY X IS ANY OF THE FOLLOWING STAINLESS STEEL TYPES: 316, 316LN, 304, AND 304LN. ALLOY X MATERIAL MUST COMPLY WITH ASME SECTION II, PART A. WELD MATERIAL COMPLIES WITH ASME SECTION II, PART C. MPC ENCLOSURE VESSEL WALL (I.E. CYCLINDER SHELL) WILL BE FABRICATED OF PIECES MADE FROM THE SAME TYPE OF STAINLESS STEEL.
6. ALL WELDS REQUIRE VISUAL EXAMINATION (VT). ADDITIONAL NDE INSPECTIONS ARE NOTED ON THE DRAWING AS REQUIRED. NDE TECHNIQUES AND ACCEPTANCE CRITERIA ARE GOVERNED BY ASME SECTIONS V AND III, RESPECTIVELY, AS CLARIFIED IN THE APPLICABLE SAFETY ANALYSIS REPORTS.
7. UNLESS OTHERWISE NOTED, FULL PENETRATION WELDS MAY BE MADE FROM EITHER SIDE OF A COMPONENT.
8. FUEL BASKET SUPPORTS ARE ILLUSTRATIVE. ACTUAL FUEL BASKET SUPPORT ARRANGEMENTS ARE SHOWN ON THE INDIVIDUAL FUEL BASKET DRAWINGS.
9. DIFFERENCES BETWEEN THE GENERIC MPC ENCLOSURE VESSEL AND THE TROJAN PLANT MPC ENCLOSURE VESSEL ARE SPECIFICALLY NOTED (FOR PART 71 USE ONLY).
10. ALL WELD SIZES ARE MINIMUMS. LARGER WELDS ARE PERMITTED. LOCAL AREAS OF UNDERSIZE WELDS ARE ACCEPTABLE WITHIN THE LIMITS SPECIFIED IN THE ASME CODE, AS APPLICABLE.

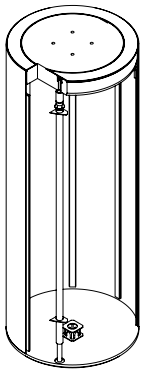

MPC ENCLOSURE VESSEL
ISOMETRIC VIEW

HOLTEC INTERNATIONAL
HOLTEC CENTER
555 LINCOLN DRIVE WEST
MARLTON, NJ 08053

CLIENT	GENERAL
DESCRIPTION	MPC ENCLOSURE VESSEL
PROJECT NO.	5014
P.O. NO.	N/A
DRAWING NO.	3923
SHEET	1
TOTAL SHEETS	6
FILE PATH	G:\DRAWINGS\5014\3923

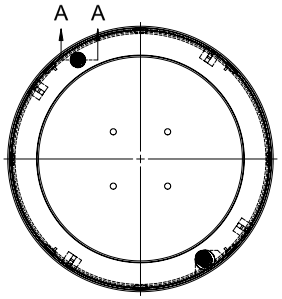

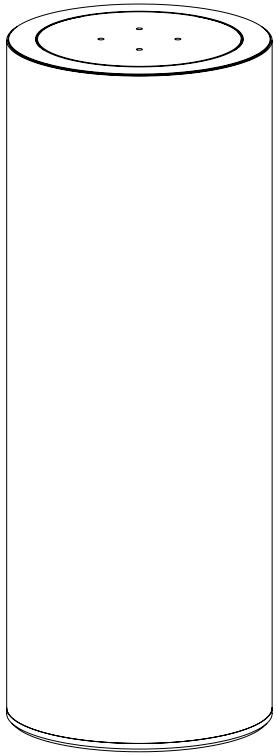

EXTERNAL VIEW

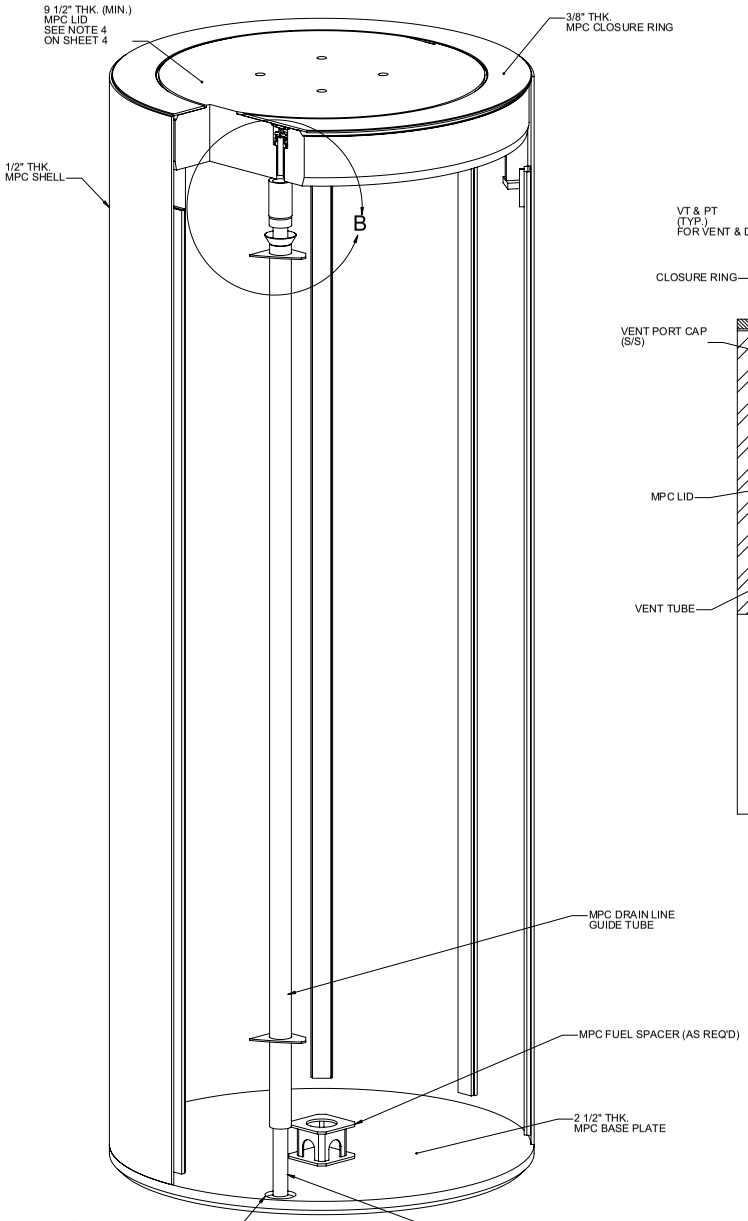

CUT AWAY VIEW

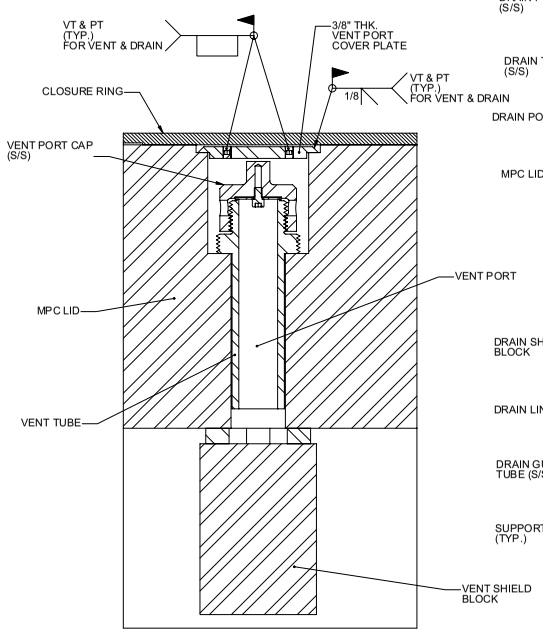

SECTION A-A
VENT PORT

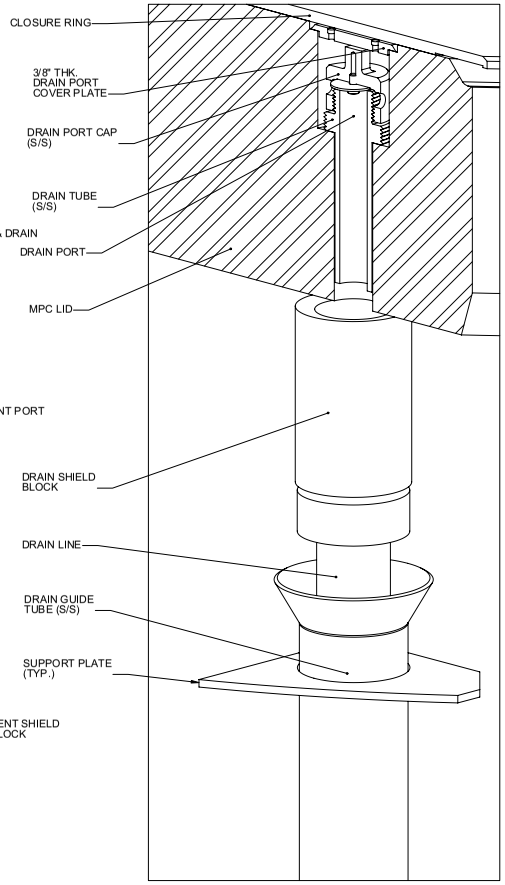

DETAIL B
DRAIN PORT

HOLTEC INTERNATIONAL
HOLTEC CENTER
555 LINCOLN DRIVE WEST
MARLTON, NJ 08053

CLIENT: GENERAL

DESCRIPTION: MPC ENCLOSURE VESSEL GENERAL ARRANGEMENT

PROJECT NO.	COMPANION DRAWINGS	SIZE	DRAWING NO.	SHEET	REV.
5014	3925, 3926, 3927, 3928	D	3923	2	15
N/A		SCALE: NONE	FILE PATH: N:\DRAWINGS\0-LAR-1014-5\3923		

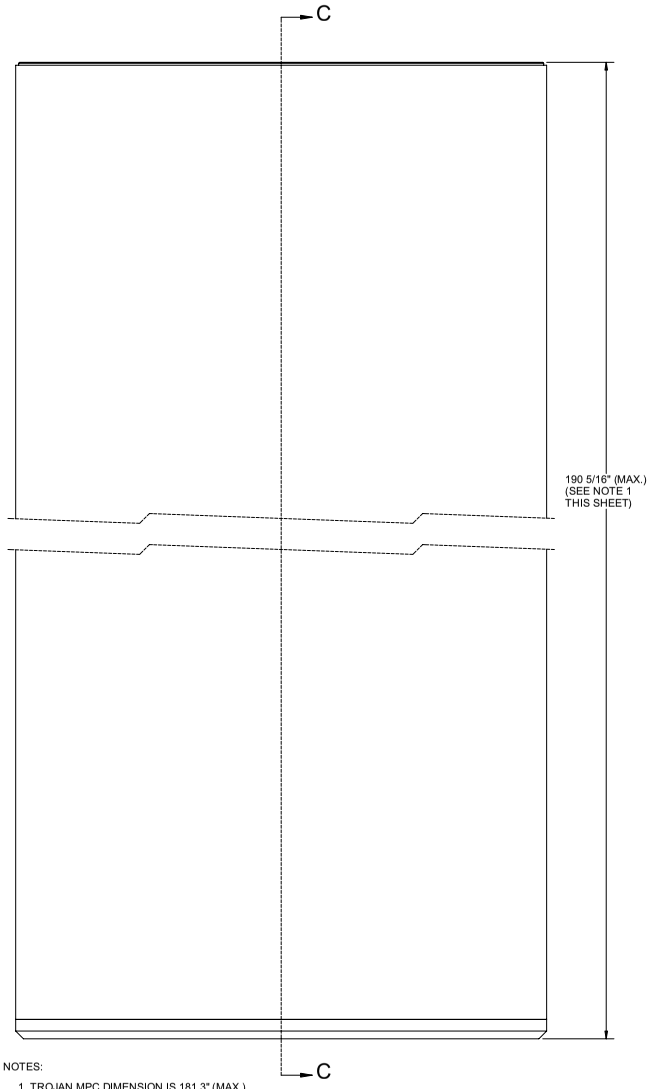

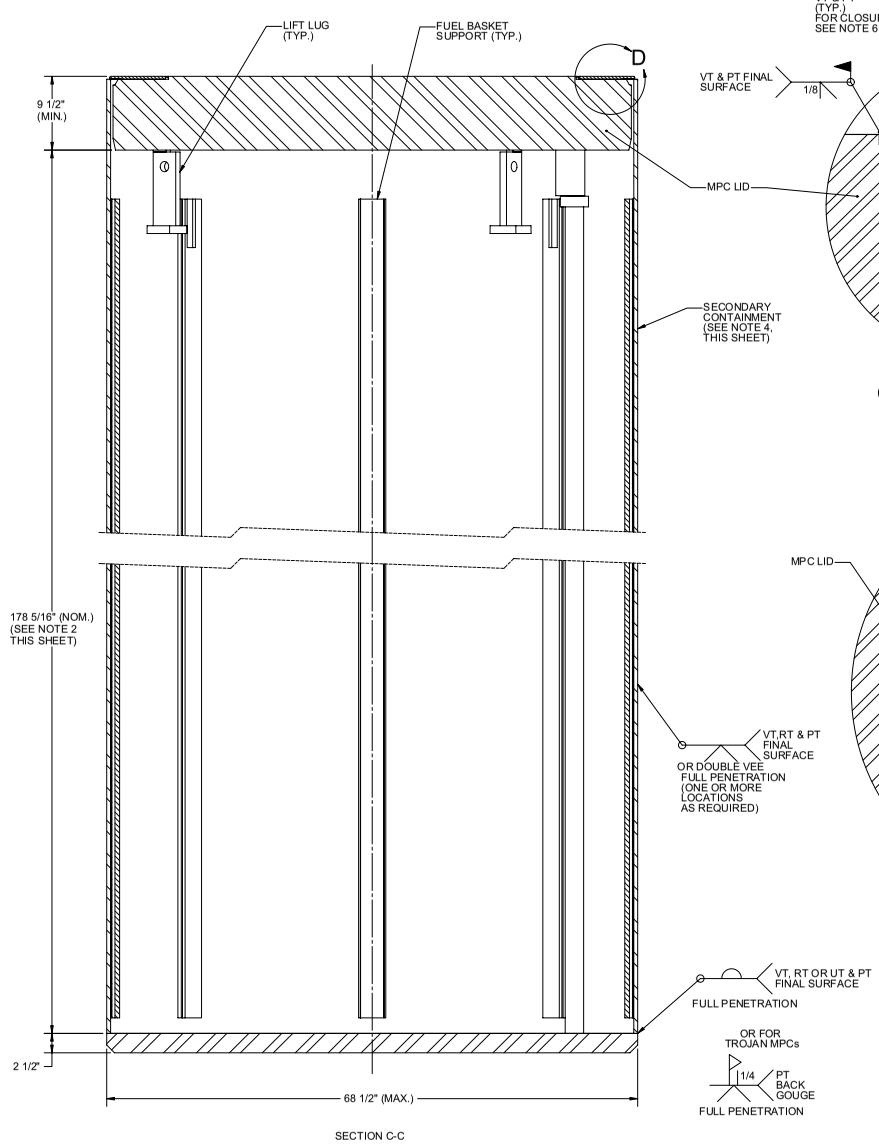

SECTION C-C

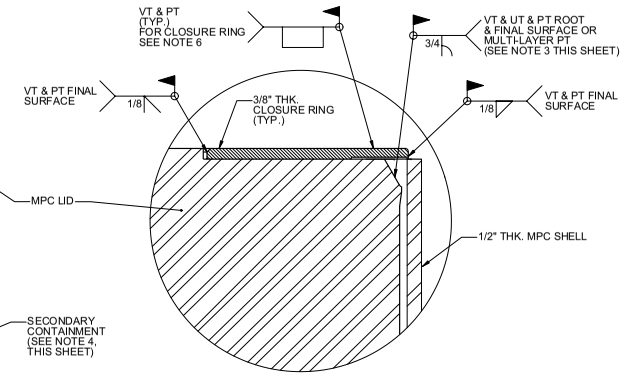

DETAIL D
(MPC-24,-24E,-32 AND -68)

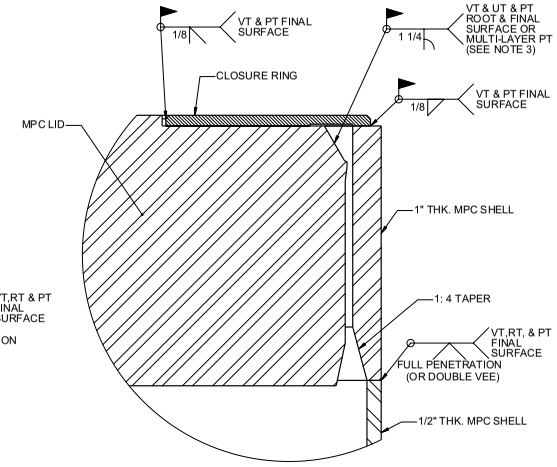

DETAIL D
(MPC-24EF,-68F AND 68FF)
(SEE NOTE 5, THIS SHEET)

NOTES:

1. TROJAN MPC DIMENSION IS 181.3" (MAX.) IP1 MPC DIMENSION IS 156 15/16" (MAX.).
2. TROJAN MPC DIMENSION IS 169.3" (NOM.) IP1 MPC DIMENSIONS IS 144 15/16" (MAX.)
3. MULTI-LAYER PT SHALL INCLUDE ROOT AND FINAL PASSES AND EACH APPROXIMATELY 3/8" OF WELD DEPTH.
4. A SEPARATE INNER CONTAINER IS REQUIRED FOR THE TRANSPORTATION OF FUEL DEBRIS. THIS "SECONDARY CONTAINMENT" IS PROVIDED BY THE MPC ENCLOSURE VESSEL FOR THE "F" -MODEL MPCs. IT IS COMPRISED OF THE MPC SHELL, BASEPLATE, LID, VENT AND DRAIN PORT COVER PLATES, AND ASSOCIATED WELDS. THE CLOSURE RING PROVIDES A REDUNDANT WELDED BOUNDARY.
5. MPC-68FF IS NOT CERTIFIED FOR TRANSPORTATION UNDER 10CFR71.
6. OPTIONAL CONSTRUCTION FOR THE CLOSURE RING PROVIDES PENETRATIONS TO ALLOW HELIUM LEAKAGE TESTING OF THE MPC LID-TO-SHELL AND VENT/DRAIN PORT COVER PLATE WELDS DURING A SINGLE TEST. PLUG WELDS IN THE CLOSURE RING ARE IDENTICAL TO THE PLUG WELDS IN THE VENT/DRAIN PORT COVER PLATES AND, ACCORDINGLY, ARE ADEQUATE TO SEAL THE MPC.

HOLTEC INTERNATIONAL
HOLTEC CENTER
555 LINCOLN DRIVE WEST
MARLTON, NJ 08053

CLIENT: GENERAL

DESCRIPTION: MPC ENCLOSURE ENCLOSURE VESSEL ELEVATION DETAILS

PROJECT NO.	COMPANION DRAWINGS	SIZE	DRAWING NO.	SHEET	REV.
5014	3925, 3926, 3927, 3928	D	3923	3	15
N/A		SCALE: NONE	FILE PATH: N:\DRAWINGS\0-LAR\1014-5\3923		

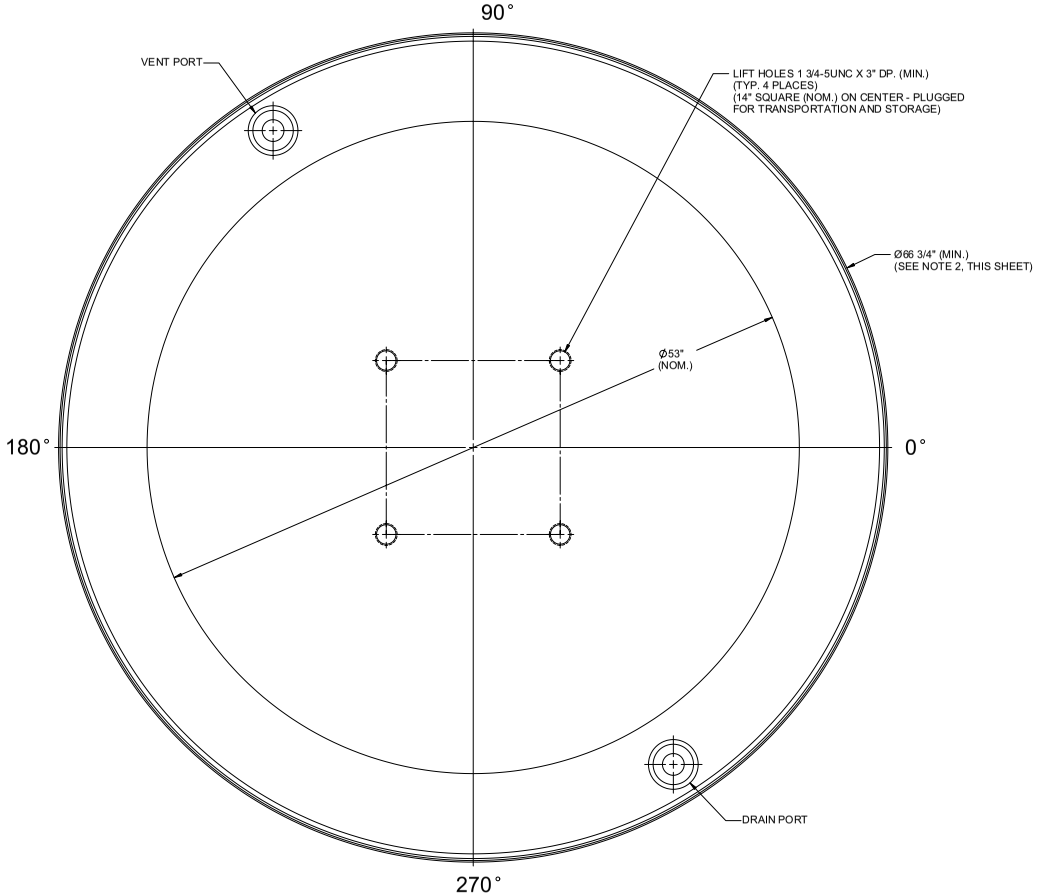

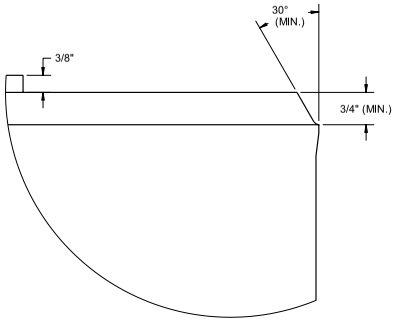

DETAIL E
(MPC-24,-24E, 32 AND 68)

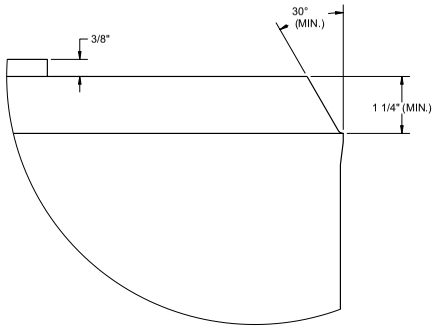

DETAIL E
(MPC-24EF,-68F, AND 68FF)
(SEE NOTE 3, THIS SHEET)

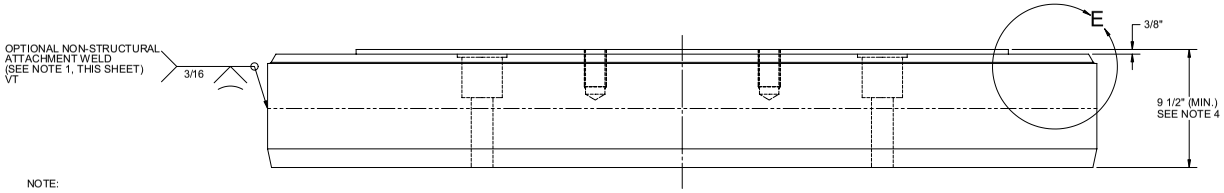

MPC LID

NOTE:

1. THE MPC LID MAY BE FABRICATED FROM ONE PIECE OR TWO PIECES, SPLIT TOP AND BOTTOM, 4 3/4" (NOM.) THICK. THE TOP PIECE ACTS AS A STRUCTURAL MEMBER AND THE BOTTOM PIECE ACTS PRIMARILY AS A RADIATION SHIELD.
2. MPC LID IS 66 3/4" (MIN.) DIAMETER EXCEPT "F" MODEL, WHICH IS 65.8" (MIN.) DIAMETER.
3. MPC-68FF IS NOT CERTIFIED FOR TRANSPORTATION UNDER 10CFR71.
4. MPC-68 SERIAL #1021-040 HAS A ONE-TIME DEVIATION WITH RESPECT TO THE MPC LID THICKNESS. SHEET 6 DEPICTS THE SPECIFIC CONFIGURATION FOR THIS LID (SMDR-1021-929).

HOLTEC INTERNATIONAL
HOLTEC CENTER
555 LINCOLN DRIVE WEST
MARLTON, NJ 08053

CLIENT: GENERAL

DESCRIPTION: MPC ENCLOSURE VESSEL LID DETAILS

PROJECT NO.	COMPANION DRAWINGS	SIZE	DRAWING NO.	SHEET	REV.
5014	3925, 3926, 3927, 3928	D	3923	4	15
N/A		SCALE: NONE	FILE PATH: N:\DRAWINGS\0-LAR-1014-5\3923		

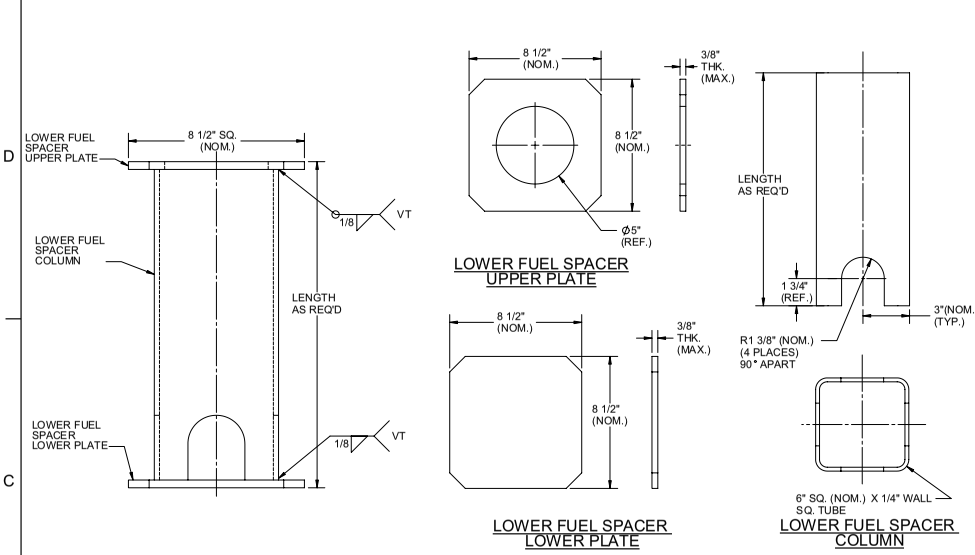

LOWER PWR FUEL SPACER ASSEMBLY

(SEE NOTE 1 THIS SHEET)

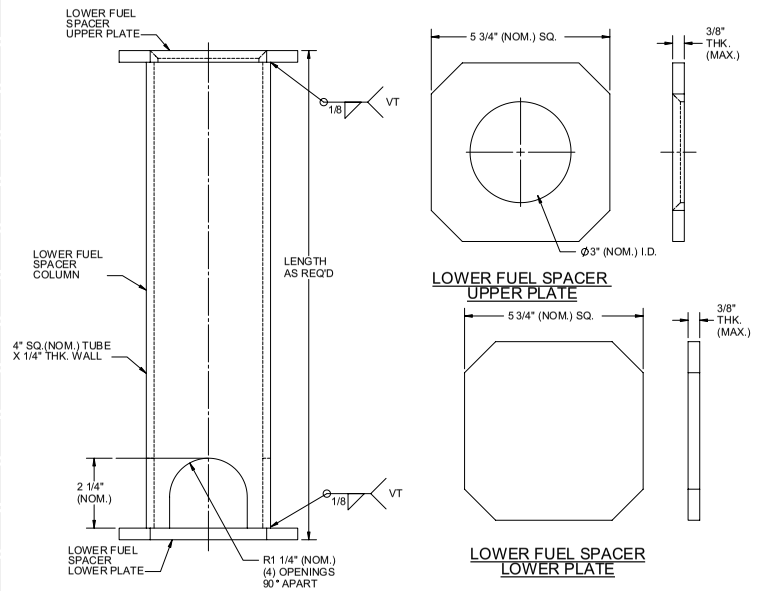

LOWER BWR FUEL SPACER ASSEMBLY

(SEE NOTE 1 THIS SHEET)

NOTES:

1. TOLERANCES ON PLATE AND COLUMN THICKNESS PER ASME SECTION II OR ASTM A554, AS APPLICABLE.
2. PWR LOWER FUEL SPACER COLUMN MATERIAL MUST BE TYPE 304 OR 304LN STAINLESS STEEL WITH TENSILE STRENGTH >/= 75 ksi, YIELD STRENGTH >/= 30ksi, AND CHEMICALS PER ASTM A554. BWR LOWER FUEL SPACER COLUMNS ARE "ALLOY X" WITH SAME TENSILE, YIELD, AND CHEMICAL REQUIREMENTS.

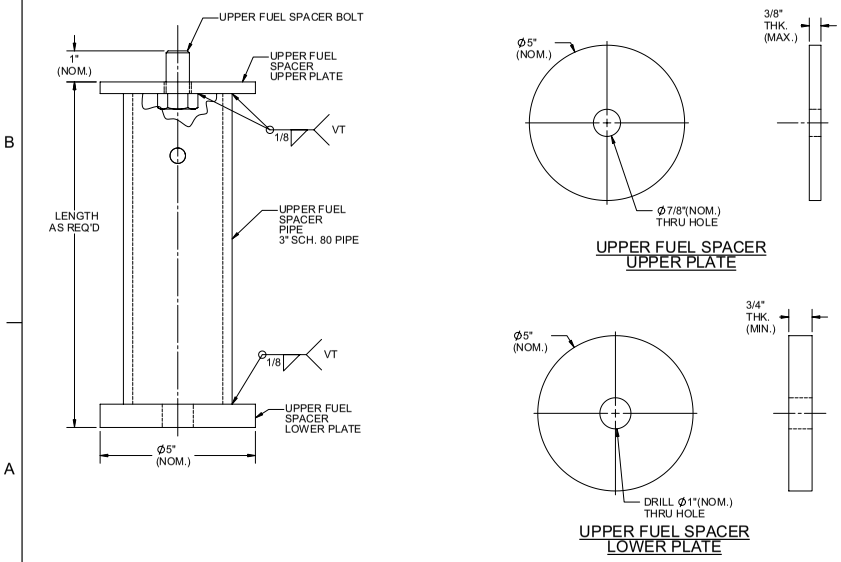

UPPER PWR FUEL SPACER ASSEMBLY

(SEE NOTE 1 THIS SHEET)

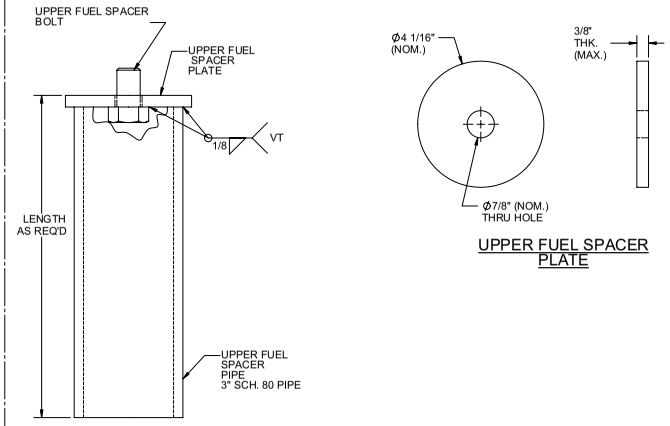

UPPER BWR FUEL SPACER ASSEMBLY

(SEE NOTE 1 THIS SHEET)

FUEL SPACER DESIGN DATA			
ITEM	APPLICABLE CODE	SAFETY CLASS	MATERIAL
LOWER FUEL SPACER LOWER PLATE	NON-CODE	ITS	ALLOY X
LOWER FUEL SPACER LOWER PLATE	NON-CODE	ITS	ALLOY X
UPPER FUEL SPACER LOWER PLATE	NON-CODE	ITS	ALLOY X
UPPER FUEL SPACER UPPER PLATE	NON-CODE	ITS	ALLOY X
UPPER FUEL SPACER BOLT	NON-CODE	NITS	SA193B8 (OR EQUIV.)
LOWER FUEL SPACER COLUMN	ASME III, NG (STRESS ANALYSIS ONLY)	ITS	SEE NOTE 2, THIS SHEET
UPPER FUEL SPACER PIPE	ASME III, NG (STRESS ANALYSIS ONLY)	ITS	ALLOY X

HOLTEC INTERNATIONAL
HOLTEC CENTER
555 LINCOLN DRIVE WEST
MARLTON, NJ 08053

CLIENT: GENERAL

DESCRIPTION: FUEL SPACER DETAILS

PROJECT NO.	COMPANION DRAWINGS	SIZE	DRAWING NO.	SHEET	REV.
5014	3925, 3926, 3927, 3928	D	3923	5	15
N/A		SCALE: NONE	FILE PATH: N:\DRAWINGS\0-LAR\1014-5\3923		

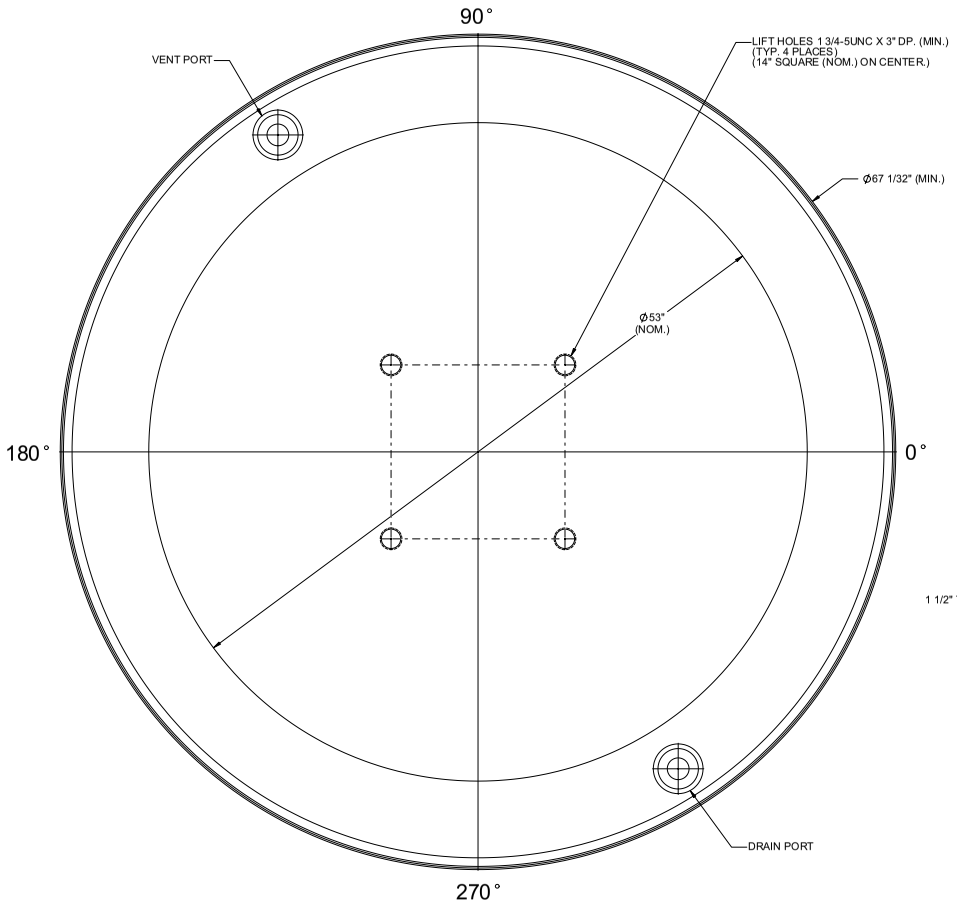

MPC LID PLAN VIEW
(SHIELD LID NOT SHOWN)

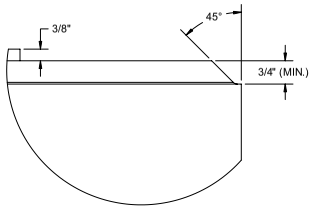

DETAIL E

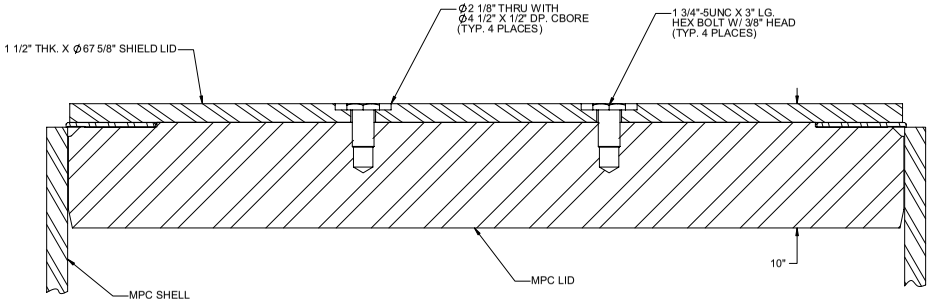

SECTION VIEW WITH SHIELD LID

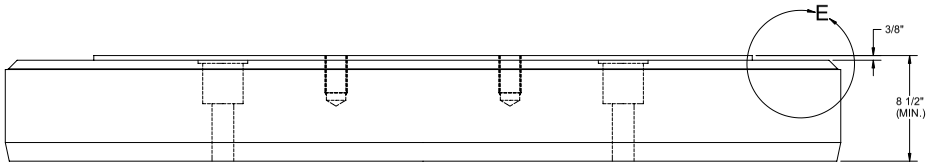

MPC LID ELEVATION VIEW
(SHIELD LID NOT SHOWN)

HOLTEC INTERNATIONAL
HOLTEC CENTER
555 LINCOLN DRIVE WEST
MARLTON, NJ 08053

CLIENT	GENERAL
DESCRIPTION	MPC SERIAL #1021-040 ENCLOSURE VESSEL LID DETAILS
PROJECT NO.	5014
P.O. NO.	N/A
COMPANION DRAWINGS	3925, 3926, 3927, 3928
SIZE	D
DRAWING NO.	3923
SHEET	6
REV.	15
SCALE	NONE
FILE PATH	N:\DRAWINGS\0-LAR\1014-5\3923

CLIENT	GENERAL		
PROJECT NO.	1023	P.O. NO.	N/A
DRAWING PACKAGE I.D.	3927	TOTAL SHEETS	5

LICENSING DRAWING PACKAGE COVER SHEET

DESIGN DRAWING PACKAGE CONTENTS:

SHEET	DESCRIPTION
1	COVER SHEET
2	FUEL BASKET ARRANGEMENT
3	FUEL BASKET LAYOUT AND WELD DETAILS
4	STANDARD FUEL BASKET SUPPORTS
5	OPTIONAL FUEL BASKET SUPPORTS

REVISION LOG

IT IS MANDATORY AT EACH REVISION TO COMPLETE THE REVIEW & APPROVAL LOG STORED IN HOLTEC'S DIRECTORY N:\PDOXWIN\WORKING\DBAL BY ALL RELEVANT TECHNICAL DISCIPLINES. PM AND QA PERSONNEL. EACH ATTACHED DRAWING SHEET CONTAINS ANNOTATED TRIANGLES INDICATING THE REVISION TO THE DRAWING.

REV	AFFECTED DRAWING SHEET NUMBERS	SUMMARY OF CHANGES/ AFFECTED ECOs	PREPARED BY	APPROVAL DATE	VIR# †
9	SHEETS 1& 2	1023-32, REV. 1	JJB	06/17/05	80623
10	SHEETS 1, 2, 4 & 5	DRAFT	JJB	--/--/--	-----

† THE VALIDATION IDENTIFICATION RECORD (VIR) NUMBER IS A COMPUTER GENERATED RANDOM NUMBER WHICH CONFIRMS THAT ALL APPROPRIATE REVIEWS OF THIS DRAWING ARE DOCUMENTED IN COMPANY'S NETWORK.

13. TOLERANCES FOR THICKNESS OF ASME CODE MATERIAL ARE SPECIFIED IN ASME SECTION II.
14. ALL WELD SIZES ARE MINIMUMS. LARGER WELDS ARE PERMITTED. LOCAL AREAS OF UNDERSIZE WELDS ARE ACCEPTABLE WITHIN THE LIMITS SPECIFIED IN THE ASME CODE, AS CLARIFIED IN THE (F)SAR.
15. REFER TO THE COMPONENT COMPLETION RECORD (CCR) FOR THE COMPLETE LIST OF APPROVED DESIGN DEVIATIONS FOR EACH INDIVIDUAL SERIAL NUMBER.
16. THE MPC-32 IS CERTIFIED FOR STORAGE AND TRANSPORTATION OF INTACT PWR FUEL, AS SPECIFIED IN COCs 72-1014, AND 71-9261.
17. DIMENSIONS NOTED AS NOMINAL ("NOM.") IN THE DRAWING ARE FOR INFORMATION ONLY, IN ORDER TO INDICATE THE GENERAL SIZE OF THE COMPONENT OR PART. NOMINAL DIMENSIONS HAVE NO SPECIFIC TOLERANCE, BUT ARE MET THROUGH FABRICATION IN ACCORDANCE WITH OTHER DIMENSIONS THAT ARE TOLERANCED AND INSPECTED. NOMINAL DIMENSIONS ARE NOT SPECIFICALLY VERIFIED DURING THE FABRICATION PROCESS.
18. (10) DIFFERENCES BETWEEN THE GENERIC MPC-32 AND THE IP1 MPC-32 ARE SPECIFICALLY NOTED (FOR PART 72 USE ONLY).

GENERAL NOTES:

1. THE EQUIPMENT DESIGN DOCUMENTED IN THIS DRAWING PACKAGE HAS BEEN CONFIRMED BY HOLTEC INTERNATIONAL TO COMPLY WITH THE SAFETY ANALYSES DESCRIBED IN THE SAFETY ANALYSIS REPORT.
2. DIMENSIONAL TOLERANCES ON THIS DRAWING ARE PROVIDED TO ENSURE THAT THE EQUIPMENT DESIGN IS CONSISTENT WITH THE SUPPORTING ANALYSIS. HARDWARE IS FABRICATED IN ACCORDANCE WITH THE DESIGN DRAWINGS, WHICH MAY HAVE MORE RESTRICTIVE TOLERANCES, TO ENSURE COMPONENT FIT-UP. DO NOT USE WORST-CASE TOLERANCE STACK-UP FROM THIS DRAWING TO DETERMINE COMPONENT FIT-UP.
3. THE REVISION LEVEL OF EACH INDIVIDUAL SHEET IN THIS PACKAGE IS THE SAME AS THE REVISION LEVEL OF THIS COVER SHEET. A REVISION TO ANY SHEET(S) IN THIS PACKAGE REQUIRES UPDATING OF REVISION NUMBERS OF ALL SHEETS TO THE NEXT REVISION NUMBER.
4. THE ASME BOILER AND PRESSURE VESSEL CODE (ASME CODE), 1995 EDITION WITH ADDENDA THROUGH 1997, IS THE GOVERNING CODE FOR THE HI-STAR 100 SYSTEM, WITH CERTAIN APPROVED ALTERNATIVES AS LISTED IN SAR TABLE 1.3.2 (TRANSPORTATION) AND FSAR TABLE 2.2.15 (STORAGE). THE MPC FUEL BASKET IS CONSTRUCTED IN ACCORDANCE WITH ASME SECTION III, SUBSECTION NG AS DESCIBED IN THE SAR (TRANSPORTATION) AND FSAR (STORAGE). NEW OR REVISED ASME CODE ALTERNATIVES REQUIRE PRIOR NRC APPROVAL BEFORE IMPLEMENTATION.
5. ALL MPC BASKET STRUCTURAL MATERIALS COMPLY WITH THE REQUIREMENTS OF ASME SECTION II, PART A. WELD MATERIAL COMPLIES WITH THE REQUIREMENTS OF ASME SECTION II, PART C.
6. ALL WELDS REQUIRE VISUAL EXAMINATION (VT). ADDITIONAL NDE INSPECTIONS ARE NOTED ON THE DRAWING AS REQUIRED. NDE TECHNIQUES AND ACCEPTANCE CRITERIA ARE PROVIDED IN THE APPLICABLE CODES AS CLARIFIED IN THE APPLICABLE SAFETY ANALYSIS REPORTS.
7. FABRICATOR MAY ADD WELDS TO STITCH WELDS AT THEIR DISCRETION.
8. DO NOT MAKE A CONTINUOUS SEAL WELD BETWEEN THE SHEATHING AND THE CELL WALL.
9. ALL STRUCTURAL MATERIALS ARE "ALLOY X" UNLESS OTHERWISE NOTED. ALLOY X IS ANY OF THE FOLLOWING STAINLESS STEEL TYPES: 316, 316 LN, 304, AND 304 LN.
10. NEUTRON ABSORBER PANELS ARE INTENDED TO HAVE NO SIGNIFICANT FLAWS. HOWEVER, TO ACCOUNT FOR MANUFACTURING DEVIATIONS OCCURING DURING INSTALLATION OF THE PANELS INTO THE MPC FUEL BASKET, NEUTRON ABSORBER DAMAGE OF UP TO THE EQUIVALENT OF A 1" DIAMETER HOLE IN EACH PANEL HAS BEEN ANALYZED AND FOUND TO BE ACCEPTABLE.
11. THIS COMPONENT IS CLASSIFIED AS ITS-A BASED ON THE HIGHEST CLASSIFICATION OF ANY SUBCOMPONENT. SUBCOMPONENT CLASSIFICATIONS ARE PROVIDED IN SAR TABLE 1.3.3 (TRANSPORTATION) AND FSAR TABLE 2.2.6 (STORAGE).
12. DELETED.

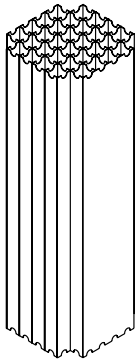

MPC-32 FUEL BASKET
ISOMETRIC VIEW

HOLTEC INTERNATIONAL
HOLTEC CENTER
555 LINCOLN DRIVE WEST
MARLTON, NJ 08053

CLIENT	GENERAL
DESCRIPTION	MPC-32 FUEL BASKET ASSEMBLY
PROJECT NO.	1023
P.O. NO.	N/A
DRAWING NO.	3927
SHEET	1
TOTAL SHEETS	5
FILE PATH	N:\DRAWINGS\0-LAR\ 1014-5\3927

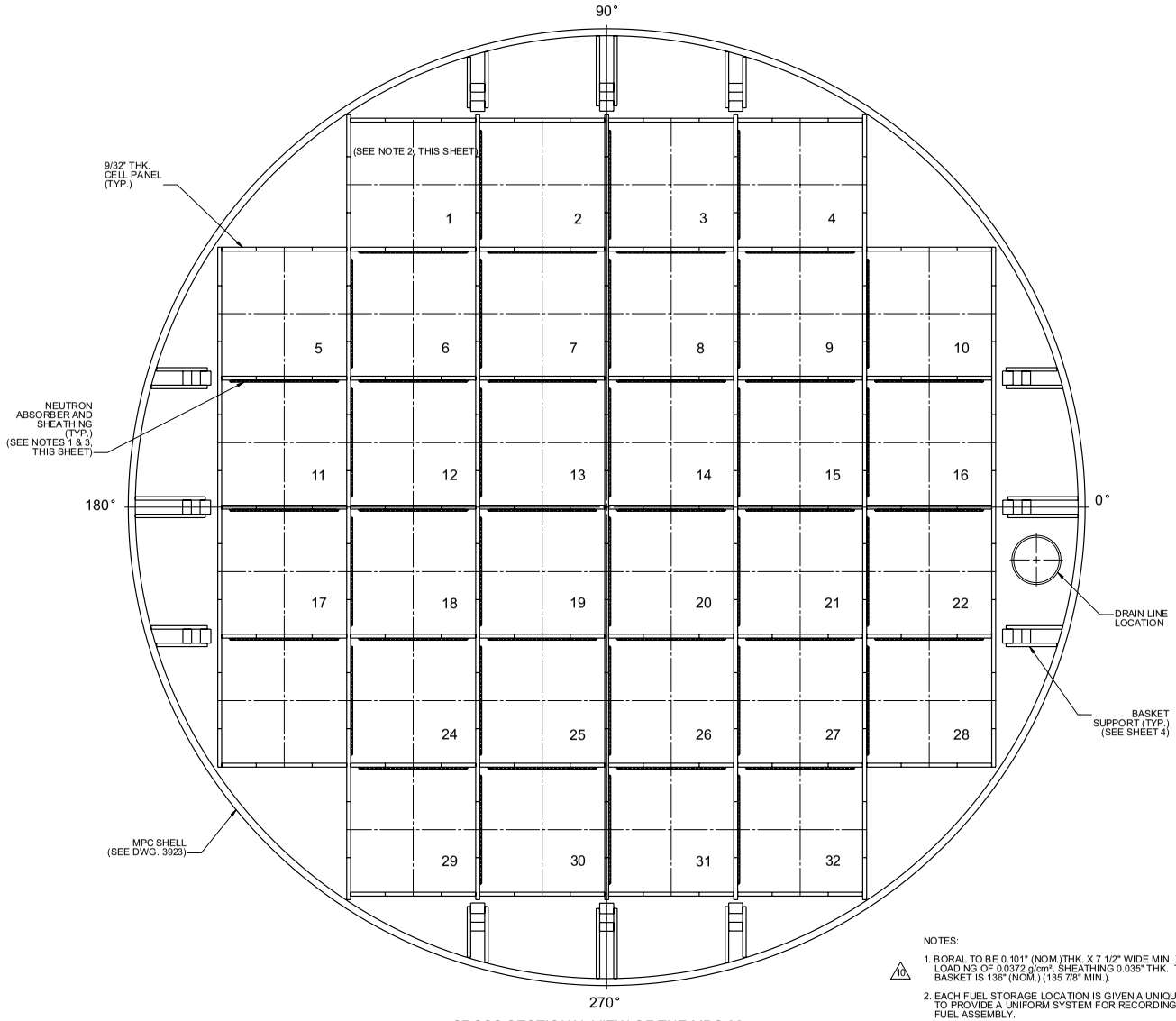

CROSS SECTIONAL VIEW OF THE MPC-32

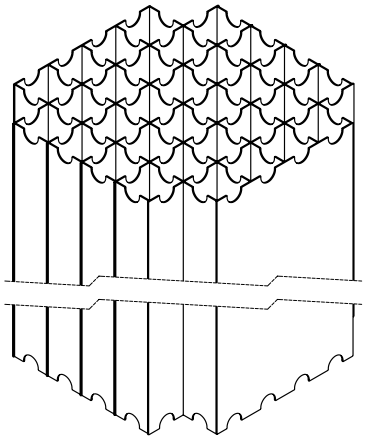

ISOMETRIC ASSEMBLY VIEW

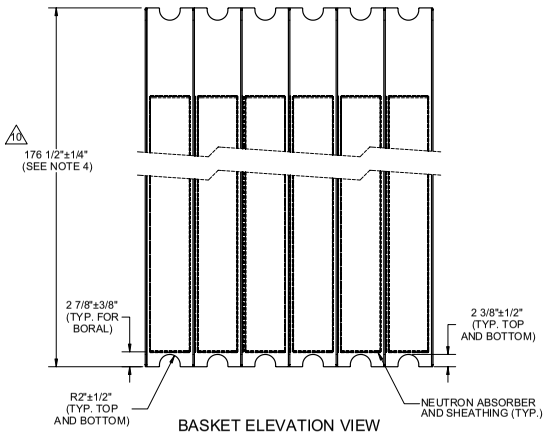

BASKET ELEVATION VIEW

NOTES:

10 1. BORAL TO BE 0.101" (NOM.)THK. X 7 1/2" WIDE MIN. X 156" (NOM.) LG. WITH MINIMUM B-10 LOADING OF 0.0372 g/cm². SHEATHING 0.035" THK. THE LENGTH OF THE BORAL FOR THE IP1 BASKET IS 136" (NOM.) (135 7/8" MIN.).

2. EACH FUEL STORAGE LOCATION IS GIVEN A UNIQUE IDENTIFICATION NUMBER TO PROVIDE A UNIFORM SYSTEM FOR RECORDING THE LOCATION OF EACH FUEL ASSEMBLY.

10 3. METAMIC MAY BE USED AS AN ALTERNATIVE TO BORAL FOLLOWING FINAL NRC APPROVAL OF CoC 1014 AMENDMENT # 2. METAMIC TO BE 0.106" (NOM.) THK. X 7 1/2" WIDE MIN. X 155 7/8" MIN. (156" NOM.) LG. THE MINIMUM METAMIC B10 LOADING IS 0.0310 g/cm^2, WITH A MINIMUM B4C LOADING OF 31.5% AND MAXIMUM OF 33%. METAMIC IS NOT REQUIRED TO BE PASSIVATED. SHEATHING 0.035" THK. THE LENGTH OF THE METAMIC FOR THE IP1 BASKET IS 136" (NOM.) (135 7/8" MIN.)

10 4. THE IP1 BASKET DIMENSION IS 143 1/8" ± 1/4".

HOLTEC INTERNATIONAL
HOLTEC CENTER
555 LINCOLN DRIVE WEST
MARLTON, NJ 08053

CLIENT	GENERAL
DESCRIPTION	MPC-32 FUEL BASKET ASSEMBLY
PROJECT NO.	1023
COMPANION DRAWINGS:	3923
N/A	
SIZE	D
DRAWING NO.	3927
SHEET	2
REV.	10
SCALE	NONE
FILE PATH	N:\DRAWINGS\0-LAR\1014-5\3927

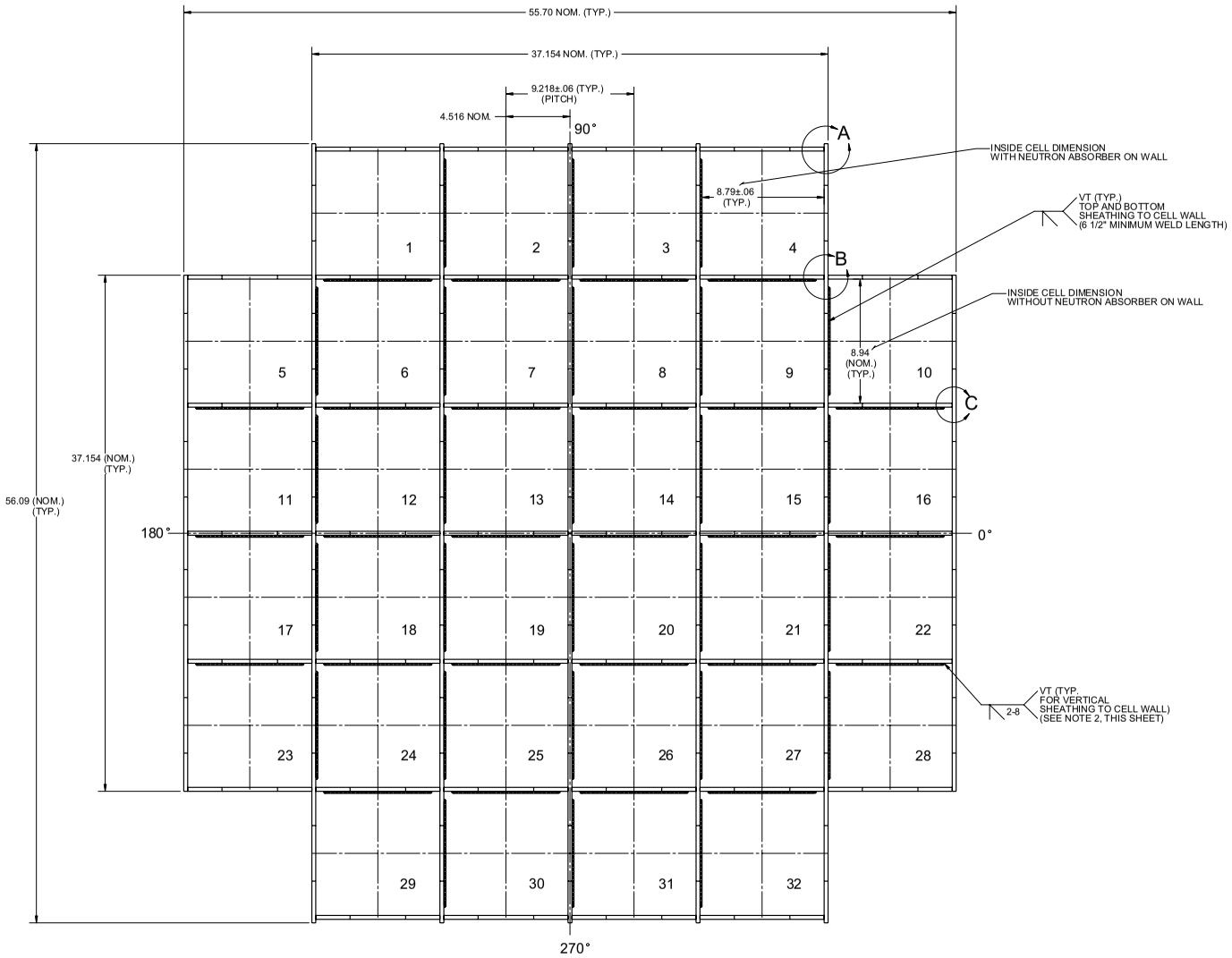

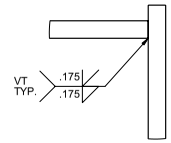

DETAIL A

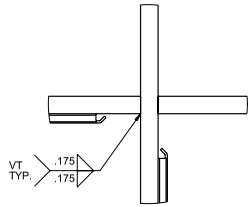

DETAIL B

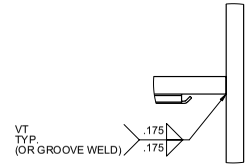

DETAIL C

NOTE:

1. DELETED.
2. LENGTH AND SPACING OF WELD ON SIDES OF SHEATHING CAN VARY PROVIDED TOTAL VERTICAL SHEATHING WELD PER PIECE IS NOT LESS THAN 65" AND THERE IS A MINIMUM OF 19" OF WELD ALONG EACH SIDE OF THE SHEATHING PANEL.

HOLTEC INTERNATIONAL
HOLTEC CENTER
555 LINCOLN DRIVE WEST
MARLTON, NJ 08053

CLIENT: GENERAL

DESCRIPTION: MPC-32 FUEL BASKET LAYOUT AND WELD DETAILS

PROJECT NO.	COMPANION DRAWINGS	SIZE	DRAWING NO.	SHEET	REV.
1023	3923	D	3927	3	10
N/A		SCALE: NONE	FILE PATH: N:\DRAWINGS\0-LAR\1014-5\3927		

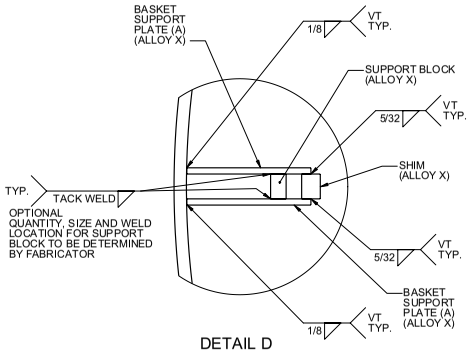

DETAIL D

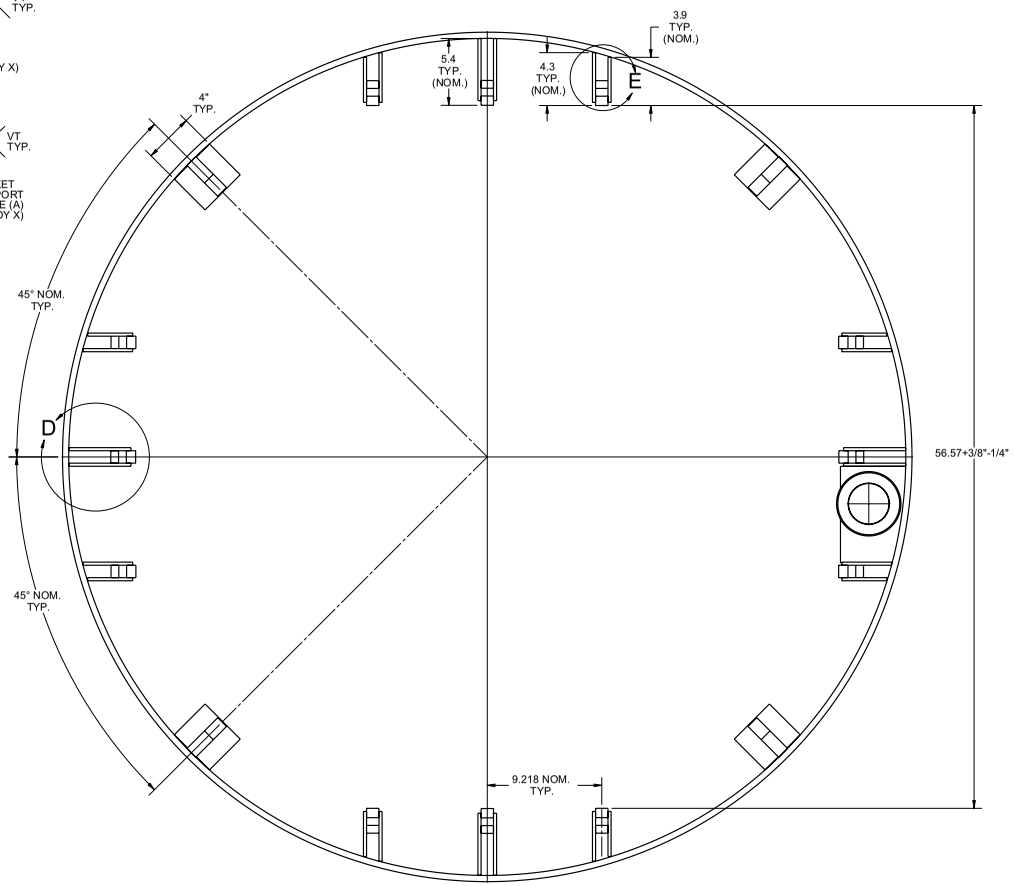

STANDARD CONSTRUCTION

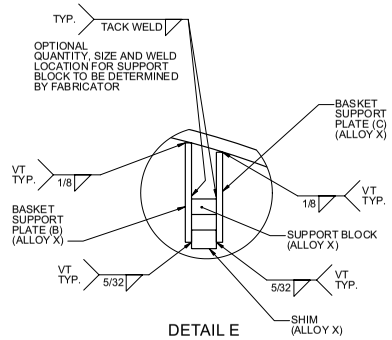

DETAIL E

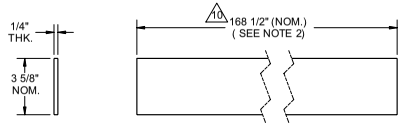

BASKET SUPPORT PLATE (C)

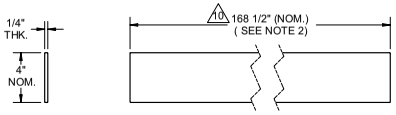

BASKET SUPPORT PLATE (B)

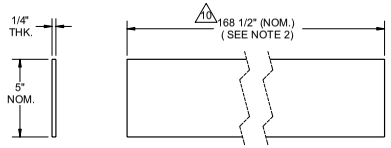

BASKET SUPPORT PLATE (A)

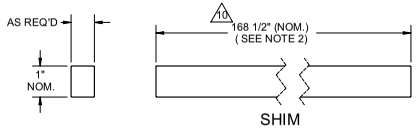

SHIM

NOTE:

1. THE MPC BASKET SUPPORTS ARE WELDED TO THE INSIDE SURFACE OF THE MPC SHELL. THEY MAY INCLUDE ADJUSTABLE SHIMS TO ENSURE THE NECESSARY CLEARANCE BETWEEN THE BASKET TOUCH POINTS AND THE BASKET SUPPORTS.
2. (10) THE IP1 BASKET DIMENSION IS 135 1/8" (NOM.).

HOLTEC INTERNATIONAL
HOLTEC CENTER
555 LINCOLN DRIVE WEST
MARLTON, NJ 08053

CLIENT	GENERAL
DESCRIPTION	MPC-32 FUEL BASKET SUPPORT
PROJECT NO.	1023
COMPANION DRAWINGS:	3923
SIZE	D
DRAWING NO.	3927
SHEET	4
REV.	10
SCALE	N/A
SCALE	NONE
FILE PATH	N:\DRAWINGS\0-LAR\1014-5\3927

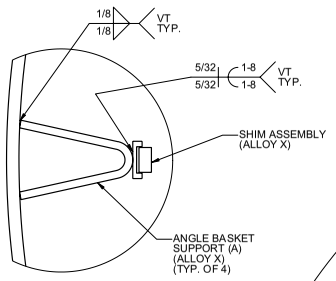

DETAIL F

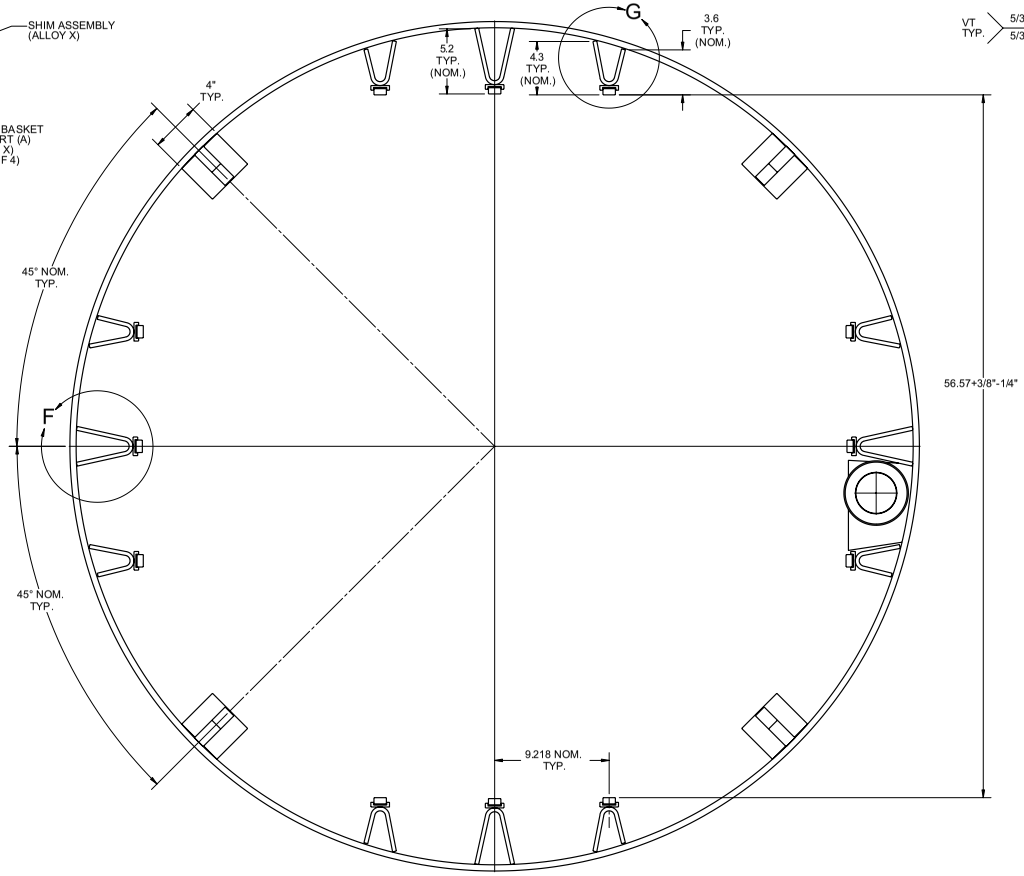

OPTIONAL CONSTRUCTION

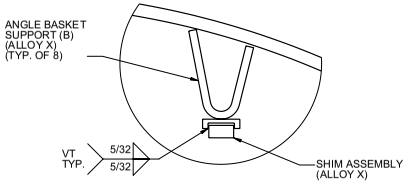

DETAIL G

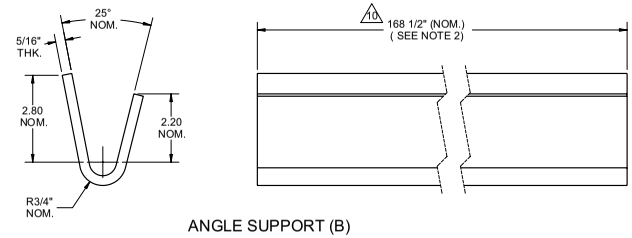

ANGLE SUPPORT (B)

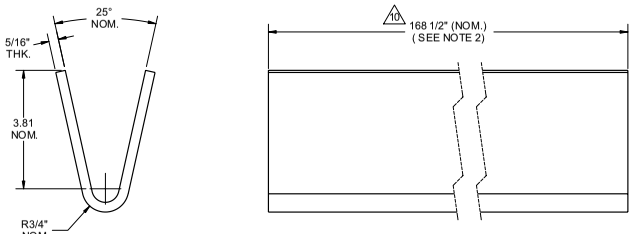

ANGLE SUPPORT (A)

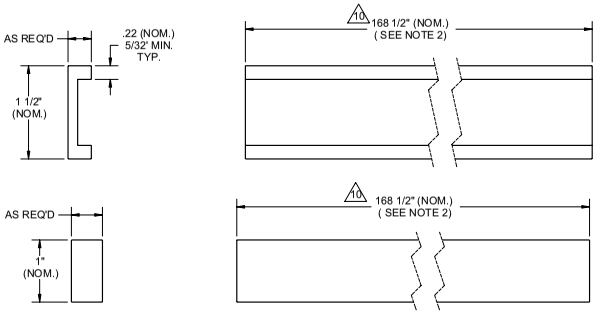

SHIM ASSEMBLY

NOTE:

1. THE MPC BASKET SUPPORTS ARE WELDED TO THE INSIDE SURFACE OF THE MPC SHELL. THEY MAY INCLUDE ADJUSTABLE SHIMS TO ENSURE THE NECESSARY CLEARANCE BETWEEN THE BASKET TOUCH POINTS AND THE BASKET SUPPORTS.

10 2. THE IP1 BASKET DIMENSION IS 135 1/8" (NOM.).

HOLTEC INTERNATIONAL
HOLTEC CENTER
555 LINCOLN DRIVE WEST
MARLTON, NJ 08053

CLIENT	GENERAL
DESCRIPTION	MPC-32 FUEL BASKET SUPPORTS
PROJECT NO.	1023
COMPANION DRAWINGS:	3923
N/A	
SIZE	D
DRAWING NO.	3927
SHEET	5
REV.	10
SCALE	NONE
FILE PATH	N:\DRAWINGS\0-LAR\1014-5\3927

CLIENT	GENERAL
PROJECT NO. 1024	P.O. NO. N/A
DRAWING PACKAGE I.D. 4116	TOTAL SHEETS 13

LICENSING DRAWING PACKAGE COVER SHEET

LICENSING DRAWING PACKAGE CONTENTS:

SHEET	DESCRIPTION
1	COVER SHEET
2	ASSEMBLY DRAWING
3	ASSEMBLY
4	BASE INLET ASSEMBLY
5	BASE INLET DETAILS
6	CASK BODY ASSEMBLY
7	CASK BODY DETAILS
8	CLOSURE LID ASSEMBLY
9	CLOSURE LID DETAILS
10	BASE INLET WELDS
11	CASK BODY WELDS
12	CLOSURE LID WELDS
13	GAMMA SHIELD SHIELD INLET & OUTLET ASSEMBLIES

REVISION LOG

IT IS MANDATORY AT EACH REVISION TO COMPLETE THE REVIEW & APPROVAL LOG STORED IN HOLTEC'S DIRECTORY N:\PDOXWIN\WORKING\DBAL BY ALL RELEVANT TECHNICAL DISCIPLINES, PM AND QA PERSONNEL. EACH ATTACHED DRAWING SHEET CONTAINS ANNOTATED TRIANGLES INDICATING THE REVISION TO THE DRAWING.

REV	AFFECTED DRAWING SHEET NUMBERS	SUMMARY OF CHANGES/ AFFECTED ECOs	PREPARED BY	APPROVAL DATE	VIR# †
11	SHEETS 1, 2, 8 & 9	1024-103, REV. 0 / 1024-95, REV. 0	D.C.B.	10/18/05	72461
12	SHEETS 1, 3, 6 & 7	DRAFT	JJB	--/--/--	-----

† THE VALIDATION IDENTIFICATION RECORD (VIR) NUMBER IS A COMPUTER GENERATED RANDOM NUMBER WHICH CONFIRMS THAT ALL APPROPRIATE REVIEWS OF THIS DRAWING ARE DOCUMENTED IN COMPANY'S NETWORK.

NOTES:

1. THE EQUIPMENT DOCUMENTED IN THIS DRAWING PACKAGE HAS BEEN CONFIRMED BY HOLTEC INTERNATIONAL TO COMPLY WITH THE SAFETY ANALYSES DESCRIBED IN THE HI-STORM FSAR.
2. DIMENSIONAL TOLERANCES ON THIS DRAWING ARE PROVIDED SOLELY FOR LICENSING PURPOSES TO DEFINE REASONABLE LIMITS ON THE NOMINAL DIMENSIONS USED IN LICENSING WORK. HARDWARE IS FABRICATED IN ACCORDANCE WITH THE FABRICATION DRAWINGS, WHICH HAVE MORE RESTRICTIVE TOLERANCES, TO ENSURE COMPONENT FIT-UP. DO NOT USE WORST-CASE TOLERANCE STACK-UP FROM THIS DRAWING TO DETERMINE COMPONENT FIT-UP.
3. THE REVISION LEVEL OF EACH INDIVIDUAL SHEET IN THE PACKAGE IS THE SAME AS THE REVISION LEVEL OF THIS COVER SHEET. A REVISION TO ANY SHEET(S) IN THIS PACKAGE REQUIRES UPDATING OF REVISION NUMBERS OF ALL SHEETS TO THE NEXT REVISION NUMBER.
4. APPLICABLE CODES AND STANDARDS ARE DELINEATED IN SECTION 2.2.4 OF THE FSAR.
5. ALL WELDS REQUIRE VISUAL EXAMINATION. ADDITIONAL NDE INSPECTIONS ARE NOTED ON THE DRAWING IF REQUIRED. NDE TECHNIQUES AND ACCEPTANCE CRITERIA ARE PROVIDED IN TABLE 9.1.4 OF THE FSAR.
6. UNLESS OTHEWISE NOTED, FULL PENETRATION WELDS MAY BE MADE FROM EITHER SIDE OF A COMPONENT.
7. THIS COMPONENT IS IMPORTANT-TO-SAFETY, CATEGORY B, BASED ON THE HIGHEST CLASSIFICATION OF ANY SUBCOMPONENT. SUBCOMPONENT CLASSIFICATIONS ARE PROVIDED ON THE FABRICATION DRAWING.
8. ALL WELD SIZES ARE MINIMUMS EXCEPT AS ALLOWED BY APPLICABLE CODES AS CLARIFIED IN THE FSAR. FABRICATORS MAY ADD WELDS WITH HOLTEC APPROVAL.
9. WELDS IDENTIFIED WITH AN # ARE CONSIDERED NON-NF WELDS. WELDS MAY BE MADE USING PREQUALIFIED WELDS IN ACCORDANCE WITH AWS D1.1 OR PER ASME SECTION IX.
10. THE 3/8" FILLET OR GROOVE WELD MAY BE APPLIED TO THE OUTER OR INNER DIAMETERS OF THE OUTER SHELL. THE WELD MAY BE APPLIED ALTERNATELY BETWEEN THE INNER & OUTER DIAMETER PROVIDED THERE IS AN OVERLAP OF THE INNER AND OUTER WELD.
11. (12) THE HI-STORM 100 S VERSION B TYPE 185 IS ONLY APPROVED FOR STORAGE OF INDIAN POINT UNIT 1 FUEL.

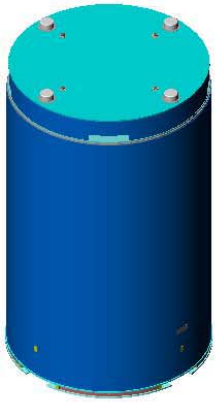

HI-STORM 100S VERSION B
ISOMETRIC VIEW

HOLTEC INTERNATIONAL
HOLTEC CENTER
555 LINCOLN DRIVE WEST
MARLTON, NJ 08053

CLIENT	GENERAL
DESCRIPTION	HI-STORM 100S VERSION B COVER SHEET
PROJECT NO. 1024	DRAWING NO. 4116 / SHEET 1 / TOTAL SHEETS 13
P.O. NO. N/A	FILE PATH N:\DRAWINGS\0-LAR\ 1014-5\4116

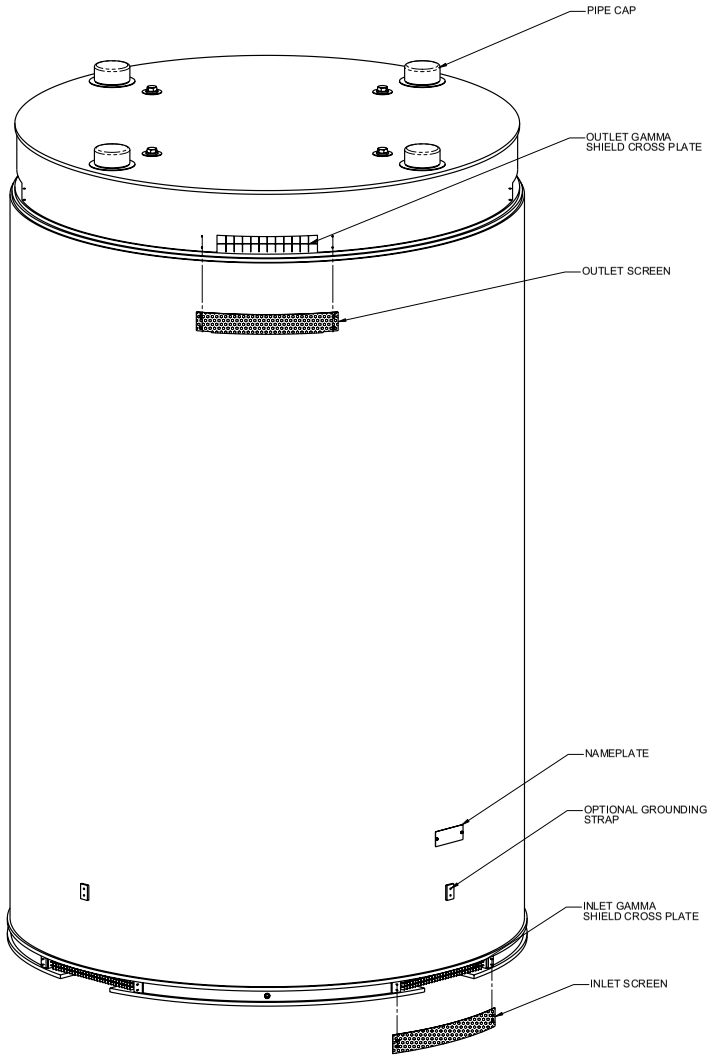

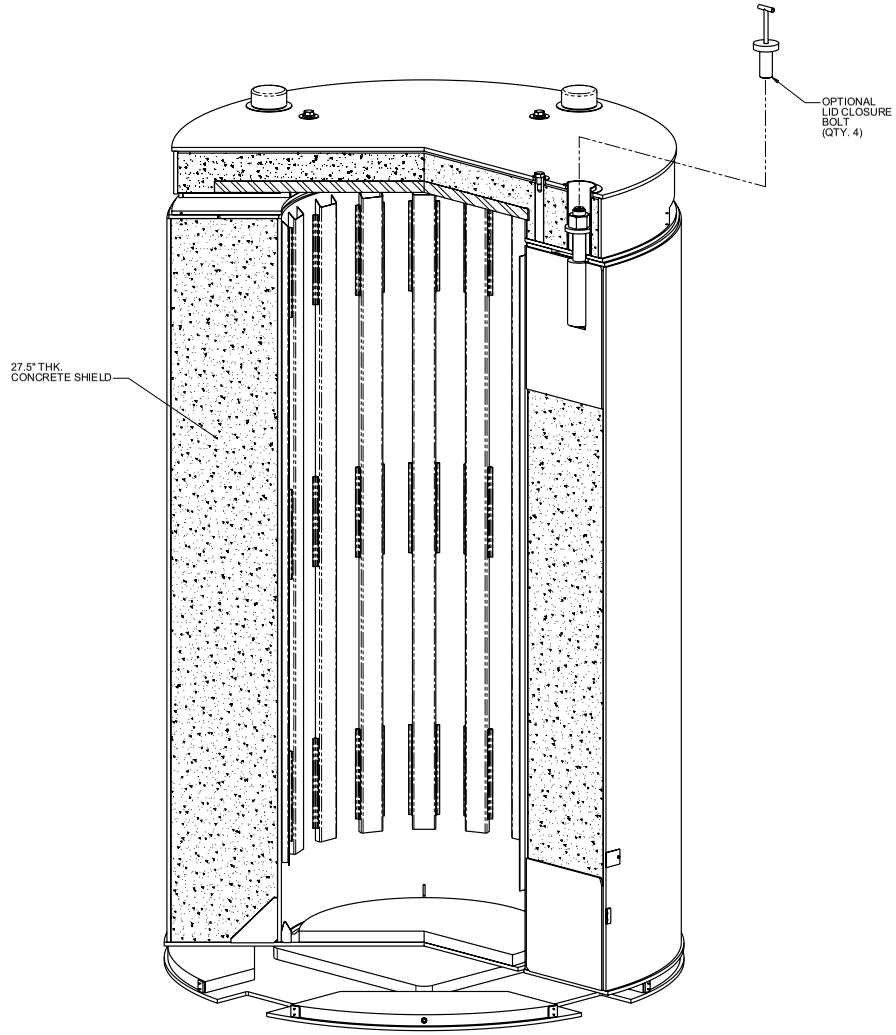

HOLTEC INTERNATIONAL
HOLTEC CENTER
555 LINCOLN DRIVE WEST
MARLTON, NJ 08053

CLIENT: GENERAL

DESCRIPTION: HI-STORM 100S VERSION B ASSEMBLY

PROJECT NO.	COMPANION DRAWINGS:	SIZE	DRAWING NO.	SHEET	REV.
1024	–	D	4116	2	12
N/A		SCALE: NONE	FILE PATH: N:\DRAWINGS\0-LAR-1014-5\4116		

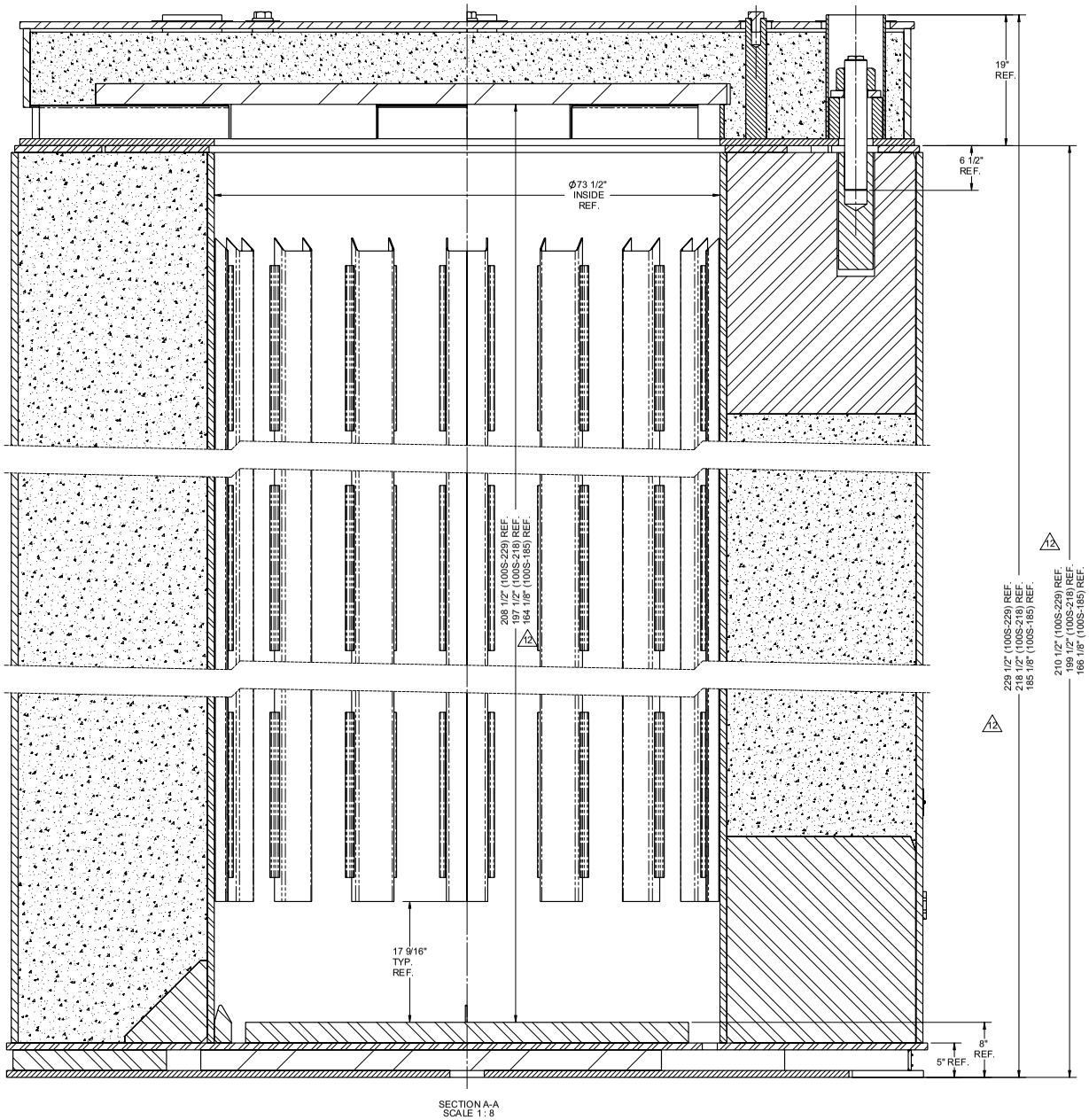

SECTION A-A
SCALE 1 : 8

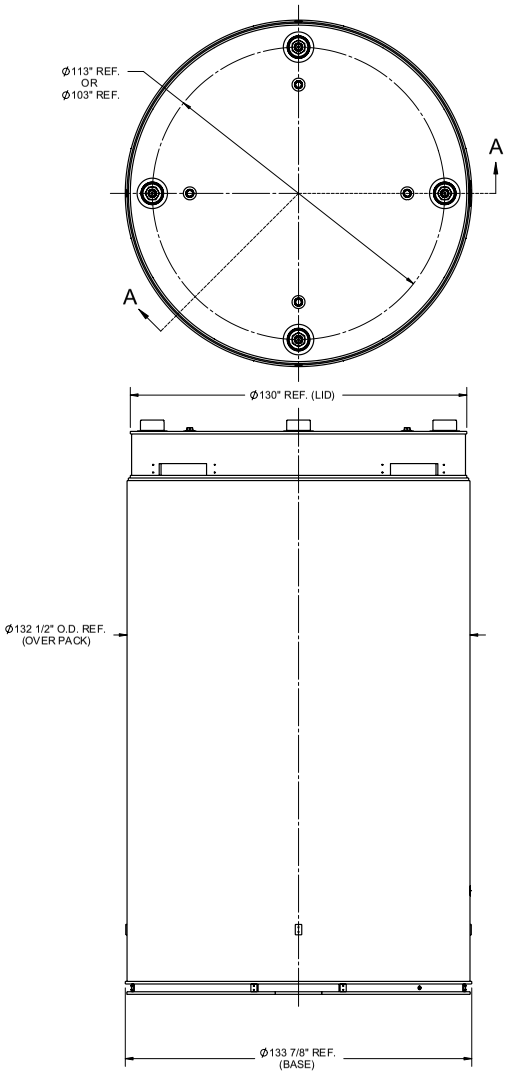

HOLTEC INTERNATIONAL
HOLTEC CENTER
555 LINCOLN DRIVE WEST
MARLTON, NJ 08053

CLIENT: GENERAL

DESCRIPTION: HI-STORM 100S VERSION B ASSEMBLY

PROJECT NO.	COMPANION DRAWINGS:	SIZE	DRAWING NO.	SHEET	REV.
1024	-	D	4116	3	12
N/A		SCALE: NONE	FILE PATH: N:\DRAWINGS\0-LAR-10145\4116		

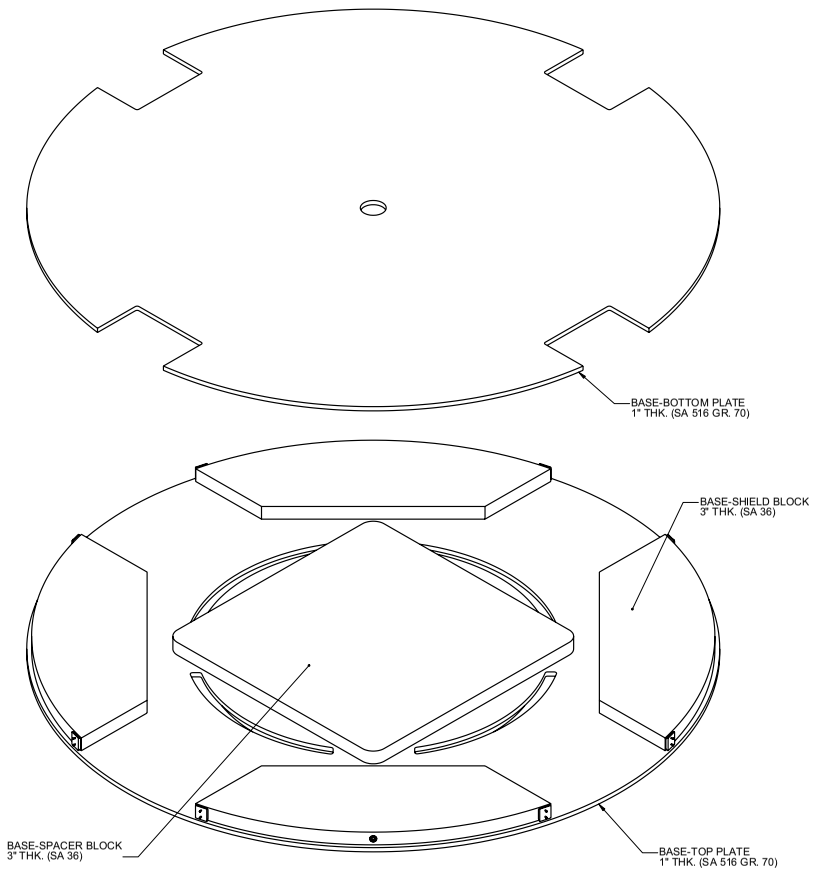

EXPLODED ASSEMBLY VIEW
(SHOWN UPSIDE DOWN)

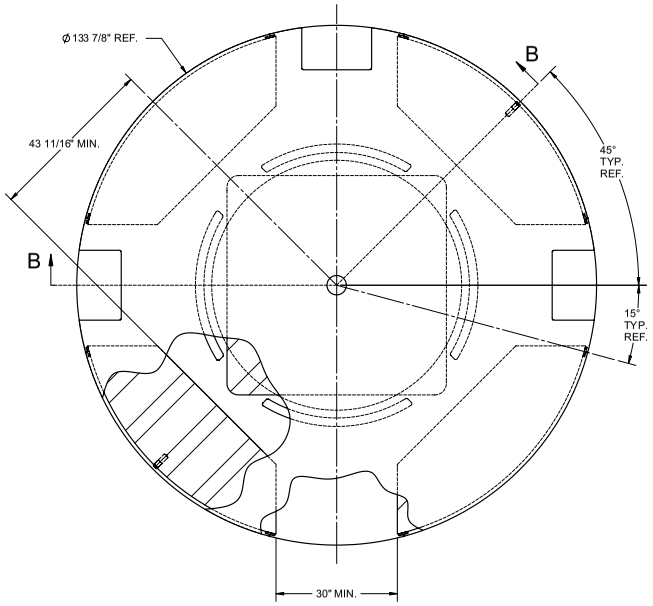

BOTTOM VIEW

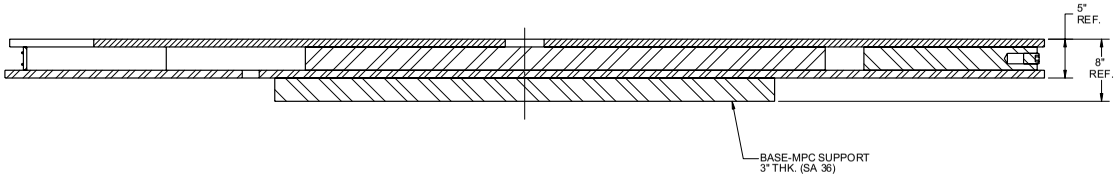

SECTION B-B
SCALE 1 : 8

HOLTEC INTERNATIONAL
HOLTEC CENTER
555 LINCOLN DRIVE WEST
MARLTON, NJ 08053

CLIENT: GENERAL

DESCRIPTION: HI-STORM 100S VER. B BASE INLET ASSEMBLY

PROJECT NO.	COMPANION DRAWINGS:	SIZE	DRAWING NO.	SHEET	REV.
1024	–	D	4116	4	12
N/A		SCALE: NONE	FILE PATH: N:\DRAWINGS\0-LAR\1014-5\4116		

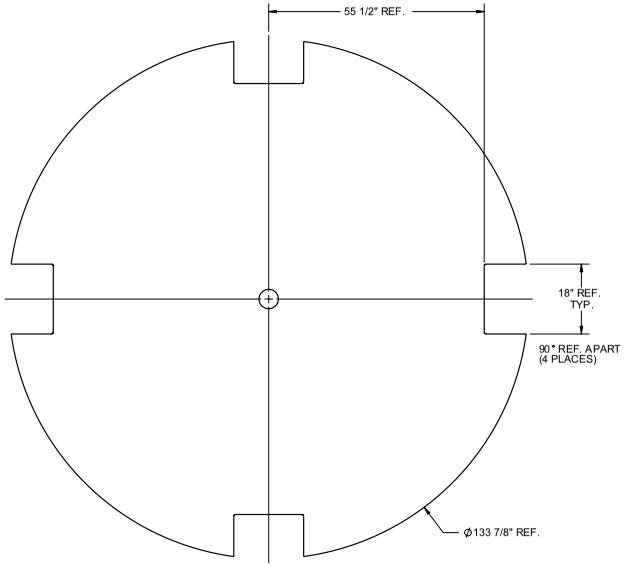

BASE-BOTTOM PLATE

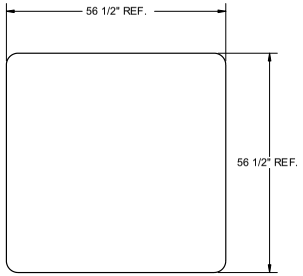

BASE-SPACER BLOCK

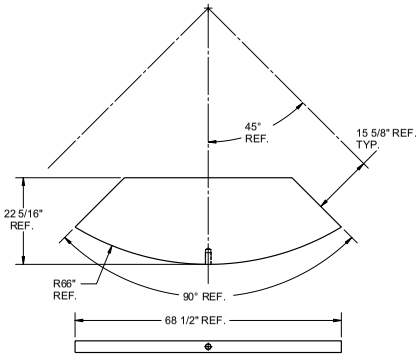

BASE-SHIELD BLOCK

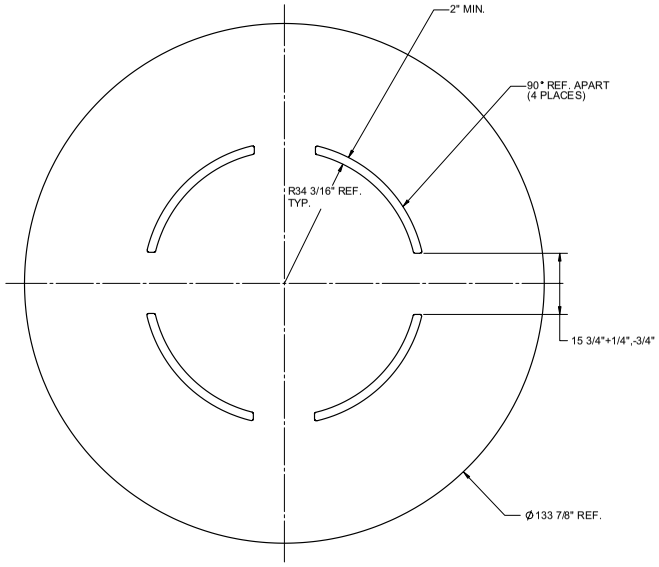

BASE-TOP PLATE

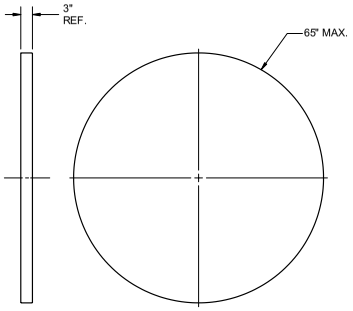

BASE-MPC SUPPORT

HOLTEC INTERNATIONAL
HOLTEC CENTER
555 LINCOLN DRIVE WEST
MARLTON, NJ 08053

CLIENT: GENERAL

DESCRIPTION: HI-STORM 100S VER. B BASE INLET DETAILS

PROJECT NO.	COMPANION DRAWINGS:	SIZE	DRAWING NO.	SHEET	REV.
1024	-	D	4116	5	12
N/A		SCALE: NONE	FILE PATH: N:\DRAWINGS\0-LAR\1014-5\4116		

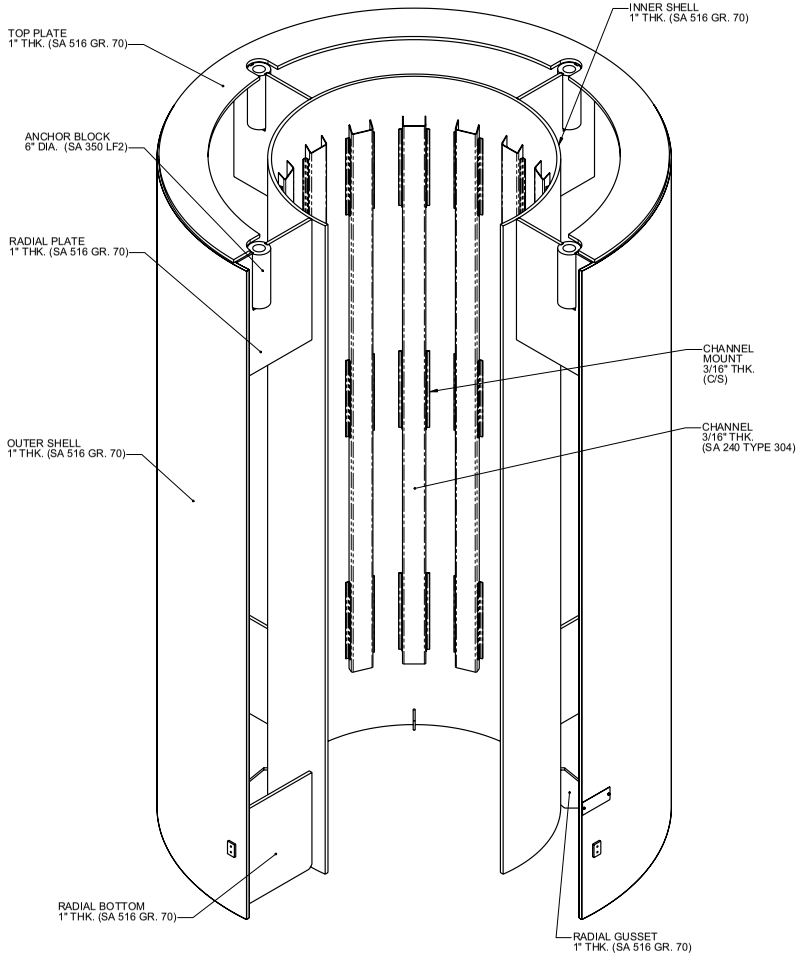

ISOMETRIC SECTION VIEW

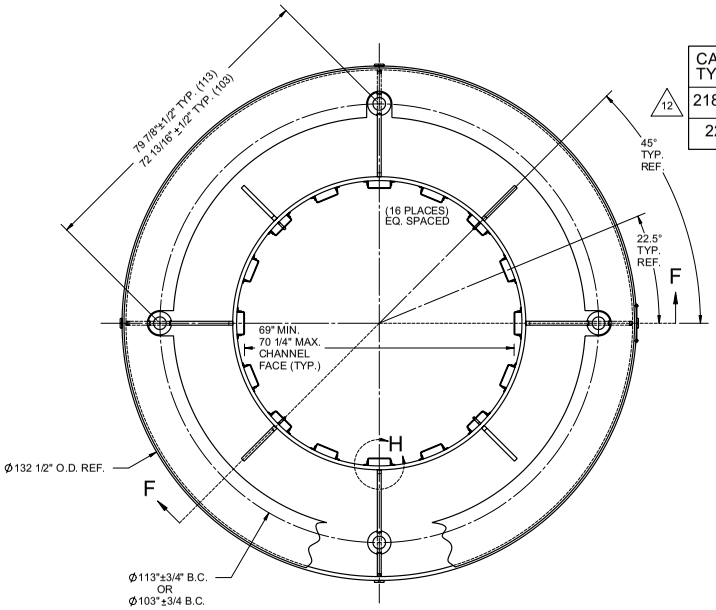

CASK TYPE	DIMENSION A
218 & 185	1 7/16" ±1/4"
229	12 7/16" ±1/4"

12

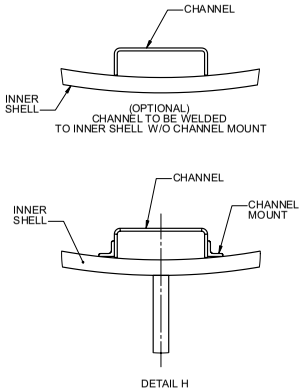

DETAIL H

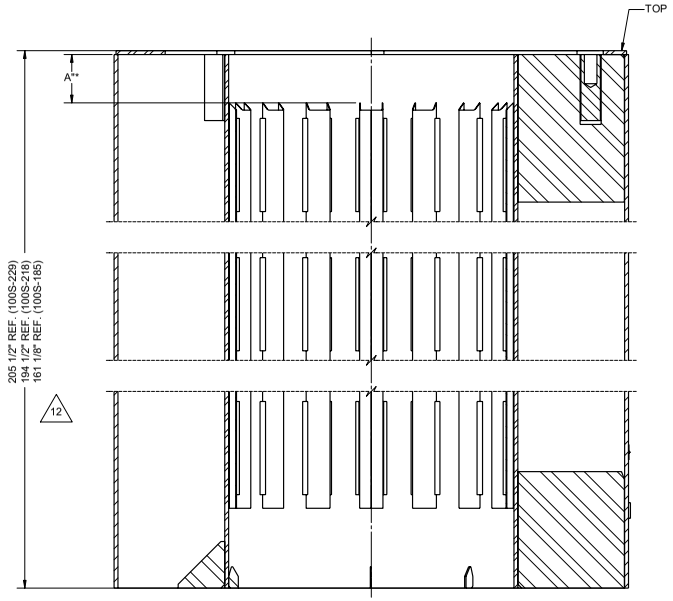

SECTION F-F

PROJECT NO.	1024
	N/A

HOLTEC INTERNATIONAL
HOLTEC CENTER
555 LINCOLN DRIVE WEST
MARLTON, NJ 08053

COMPANION DRAWINGS: -

CLIENT: GENERAL

DESCRIPTION: HI-STORM 100S VER. B CASK BODY ASSEMBLY

SIZE	DRAWING NO.	SHEET	REV.
D	4116	6	12

SCALE: NONE

FILE PATH: N:\DRAWINGS\0-LAR\1014-5\4116

X=HEIGHT (INCHES)	
CASK TYPE	X VALUE
185	160 1/8"
218	193.5
229	204.5

12

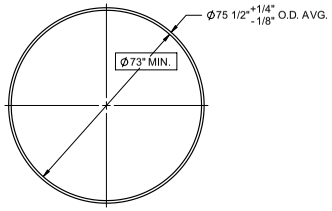

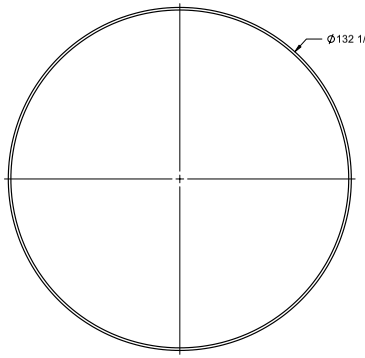

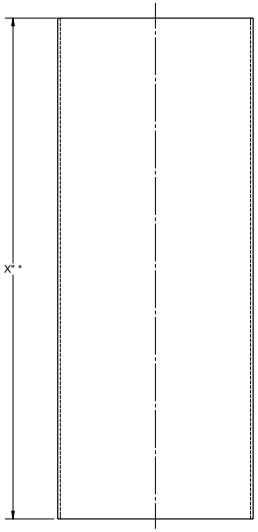

INNER SHELL

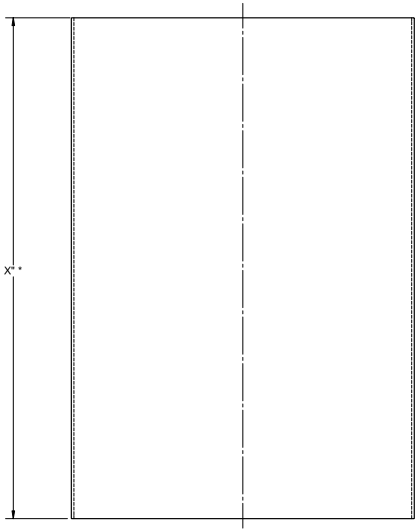

OUTER SHELL

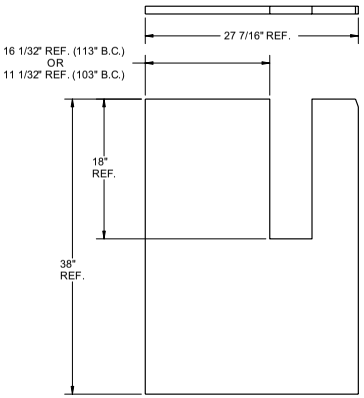

RADIAL PLATE

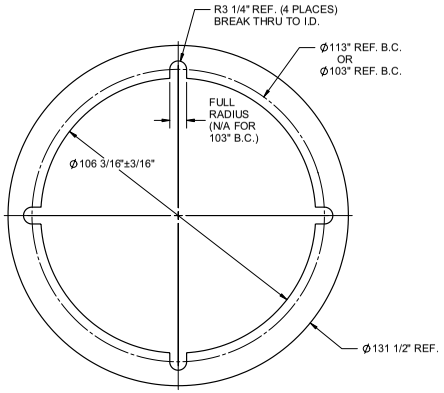

TOP PLATE

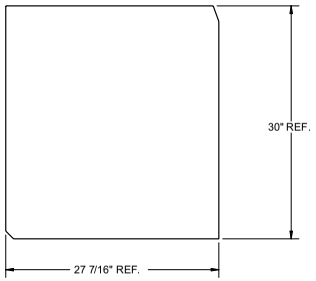

RADIAL BOTTOM

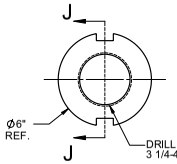

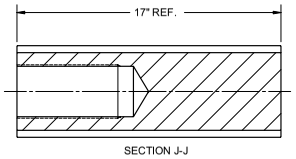

ANCHOR BLOCK

YYY IS THE HEIGHT DESIGNATION
XXXX IS THE SERIAL NUMBER
TO BE DETERMINED AT FABRICATION

HI-STORM 100S (YYY)-XXXX

EMPTY WEIGHT:_____LBS
_____kg.

HOLTEC INTERNATIONAL

NAMEPLATE

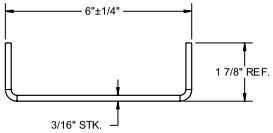

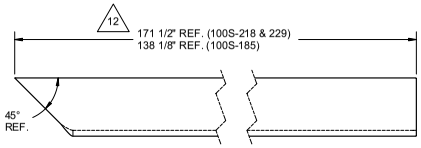

CHANNEL

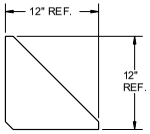

RADIAL GUSSET

HOLTEC INTERNATIONAL
HOLTEC CENTER
555 LINCOLN DRIVE WEST
MARLTON, NJ 08053

CLIENT: GENERAL

DESCRIPTION: HI-STORM 100S VER. B OVERPACK BODY DETAILS

PROJECT NO.	COMPANION DRAWINGS:	SIZE	DRAWING NO.	SHEET	REV.
1024	-	D	4116	7	12
N/A		SCALE: NONE	FILE PATH: N:\DRAWINGS\0-LAR\1014-5\4116		

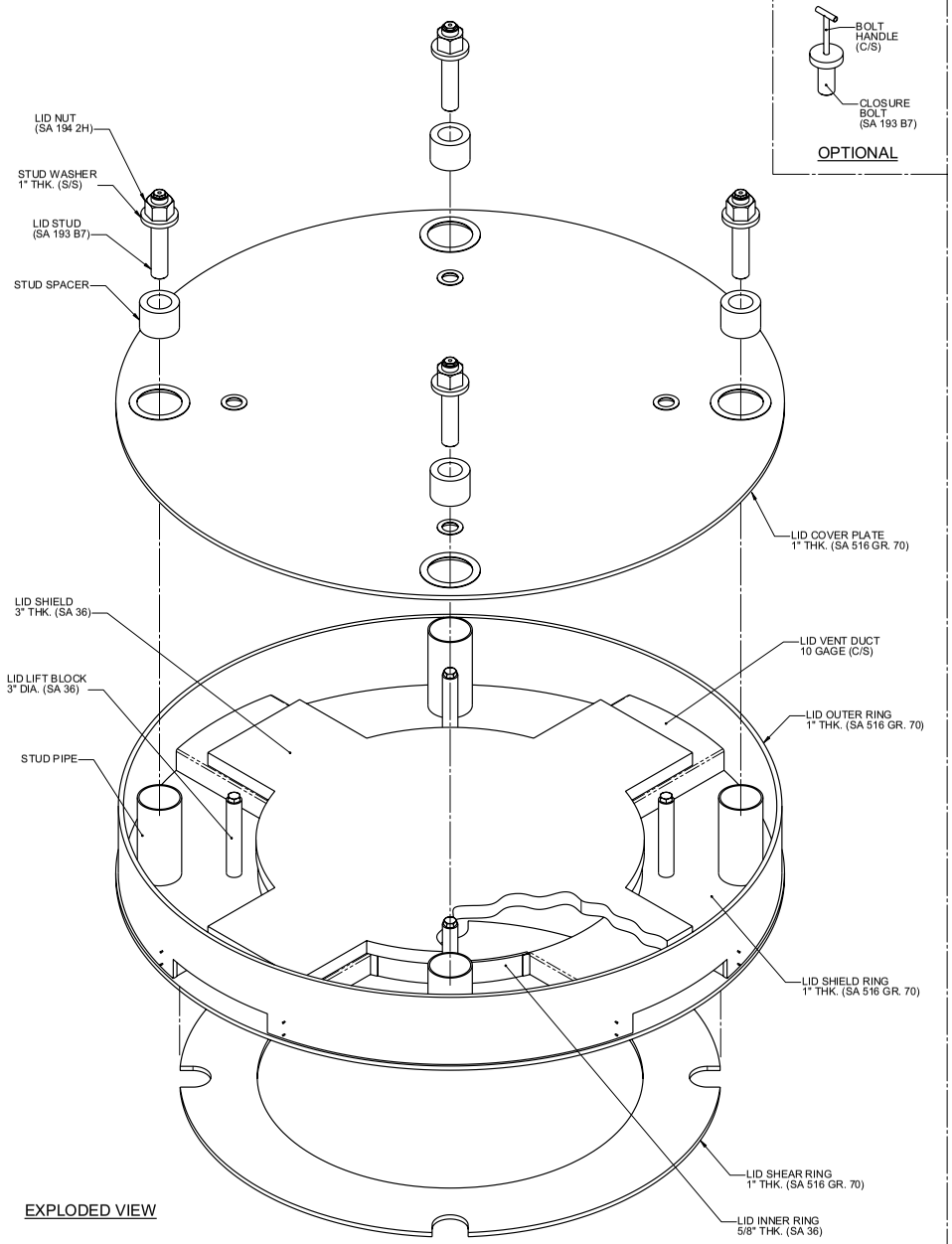

EXPLODED VIEW

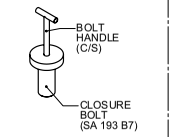

OPTIONAL

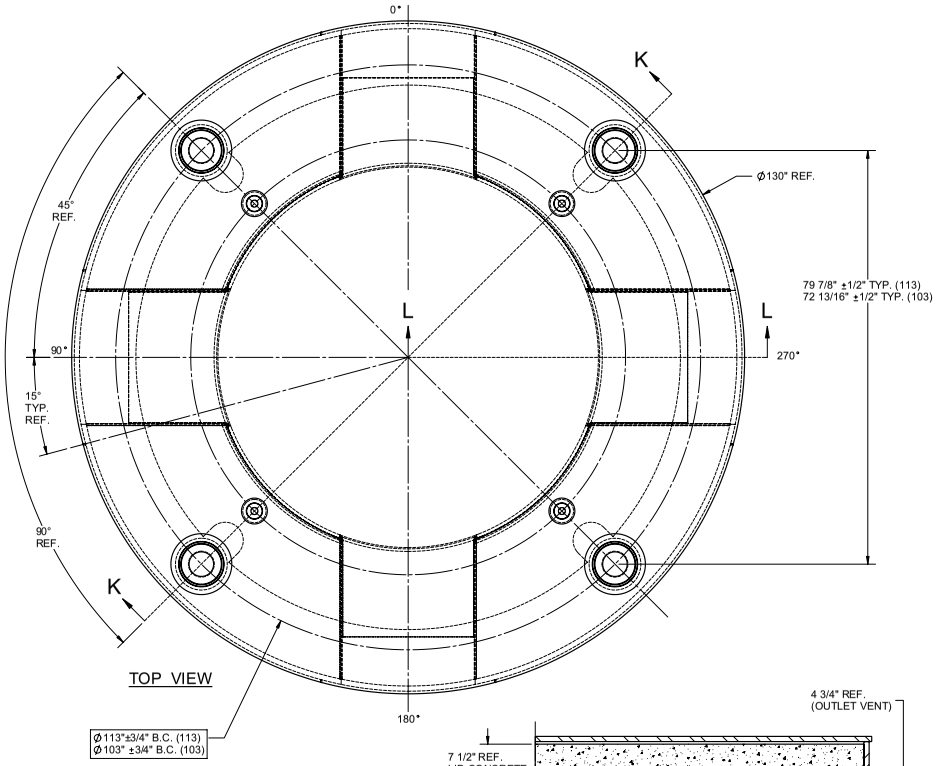

HOLTEC INTERNATIONAL
HOLTEC CENTER
555 LINCOLN DRIVE WEST
MARLTON, NJ 08053

CLIENT	GENERAL
DESCRIPTION	HI-STORM 100S VER. B CLOSURE LID ASSEMBLY
PROJECT NO.	1024
	N/A
COMPANION DRAWINGS	-
SIZE	D
DRAWING NO.	4116
SHEET	8
REV.	12
SCALE	NONE
FILE PATH	N:\DRAWINGS\0-LAR\1014\4116

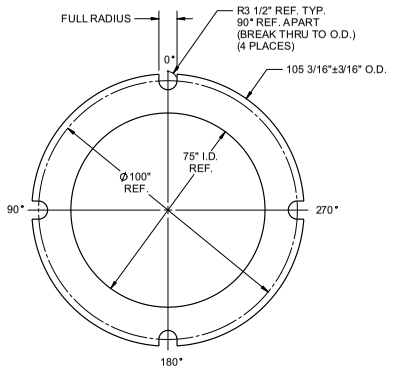

LID SHEAR RING

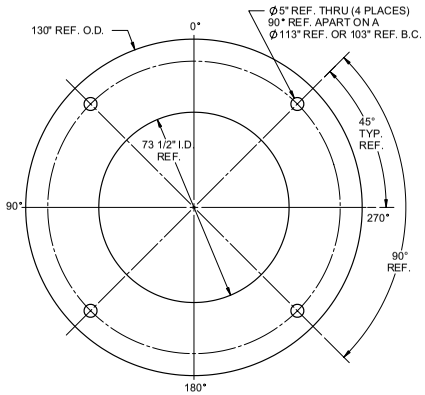

LID SHIELD RING

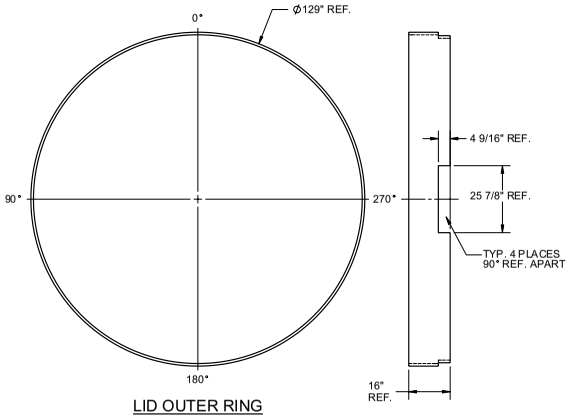

LID OUTER RING

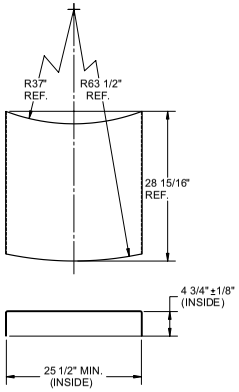

LID VENT DUCT

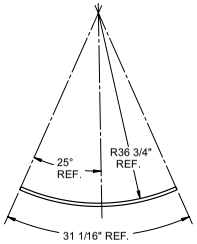

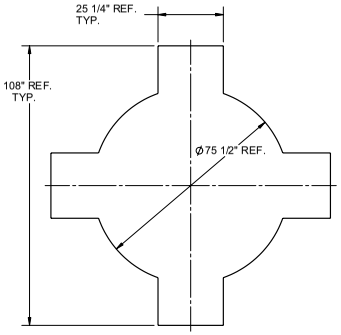

LID SHIELD

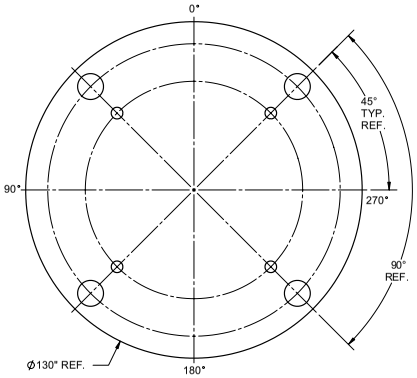

LID COVER PLATE

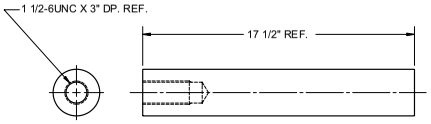

LID LIFT BLOCK

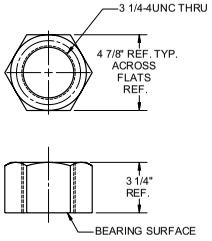

LID NUT

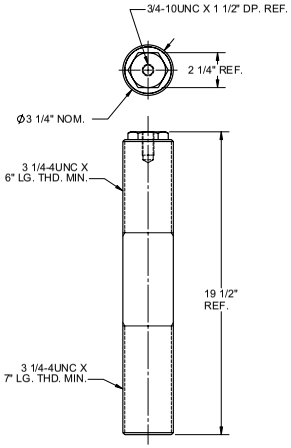

LID STUD

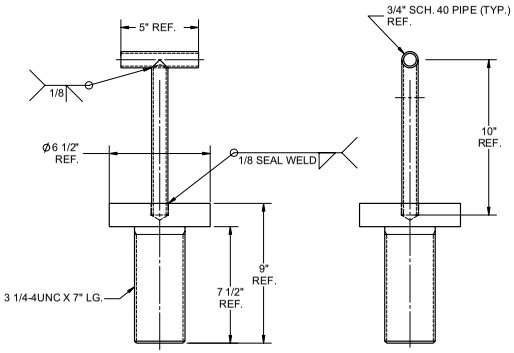

OPTIONAL LID CLOSURE BOLT

HOLTEC INTERNATIONAL
HOLTEC CENTER
555 LINCOLN DRIVE WEST
MARLTON, NJ 08053

CLIENT	GENERAL
DESCRIPTION	HI-STORM 100S VER. B CLOSURE LID DETAILS
PROJECT NO.	1024
COMPANION DRAWINGS	-
	N/A
SIZE	D
DRAWING NO.	4116
SHEET	9
REV.	12
SCALE	NONE
FILE PATH	N:\DRAWINGS\0-LAR\1014\4116

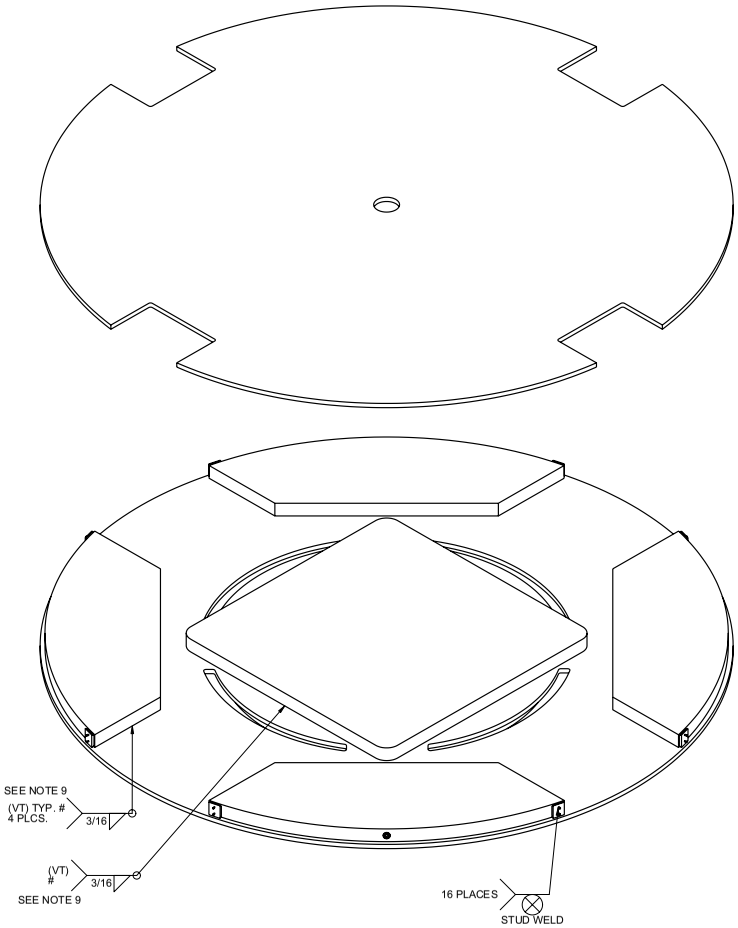

EXPLODED ASSEMBLY VIEW
(SHOWN UPSIDE DOWN)

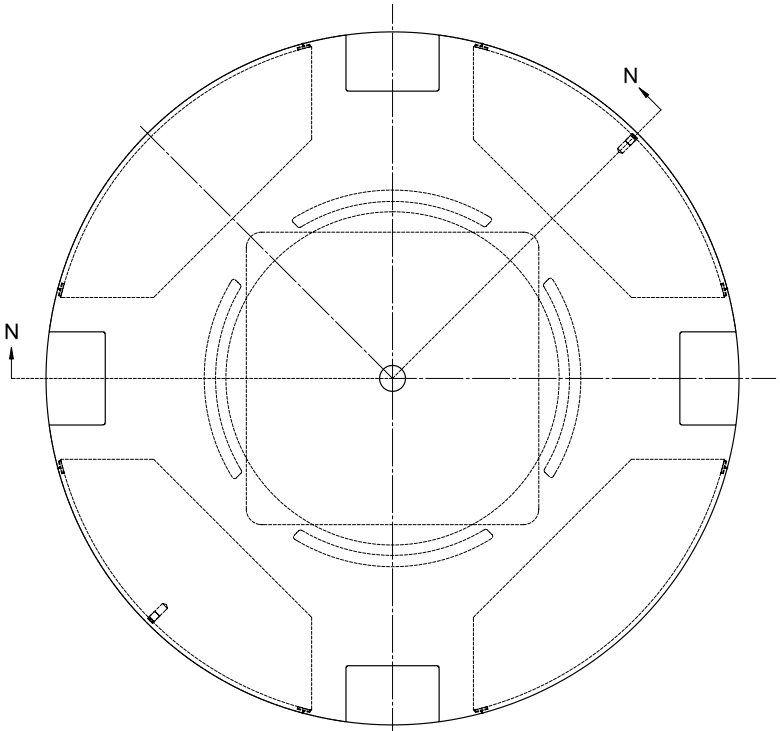

BOTTOM VIEW

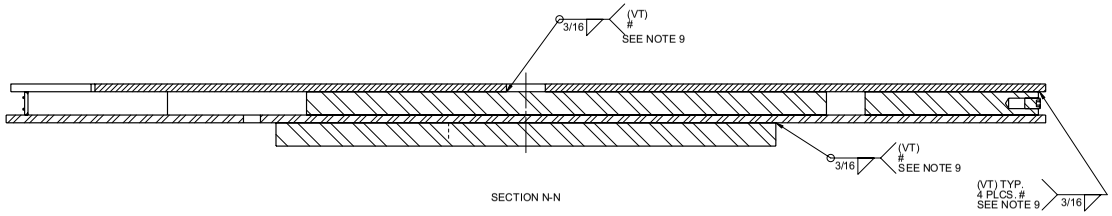

SECTION N-N

HOLTEC INTERNATIONAL
HOLTEC CENTER
555 LINCOLN DRIVE WEST
MARLTON, NJ 08053

CLIENT: GENERAL

DESCRIPTION: HI-STORM 100S VER. B BASE INLET WELDS

PROJECT NO.	COMPANION DRAWINGS:	SIZE	DRAWING NO.	SHEET	REV.
1024	-	D	4116	10	12
N/A		SCALE: NONE	FILE PATH: N:\DRAWINGS\0-LAR-1014-5\4116		

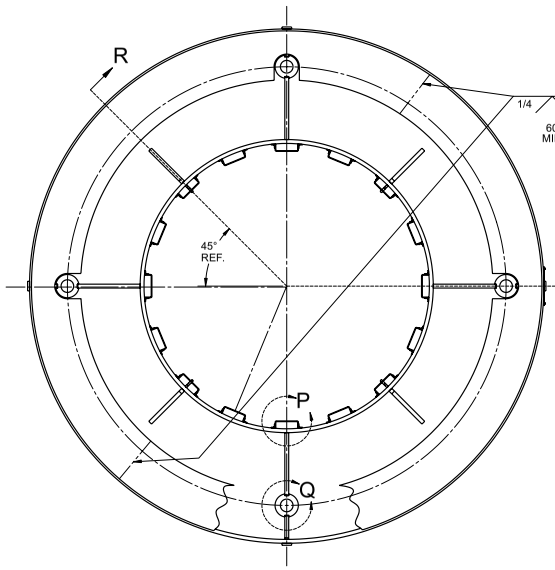

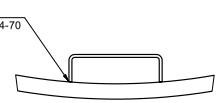

(OPTIONAL)

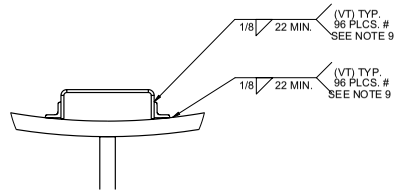

DETAIL P

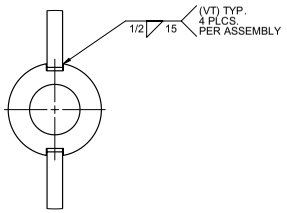

DETAIL Q

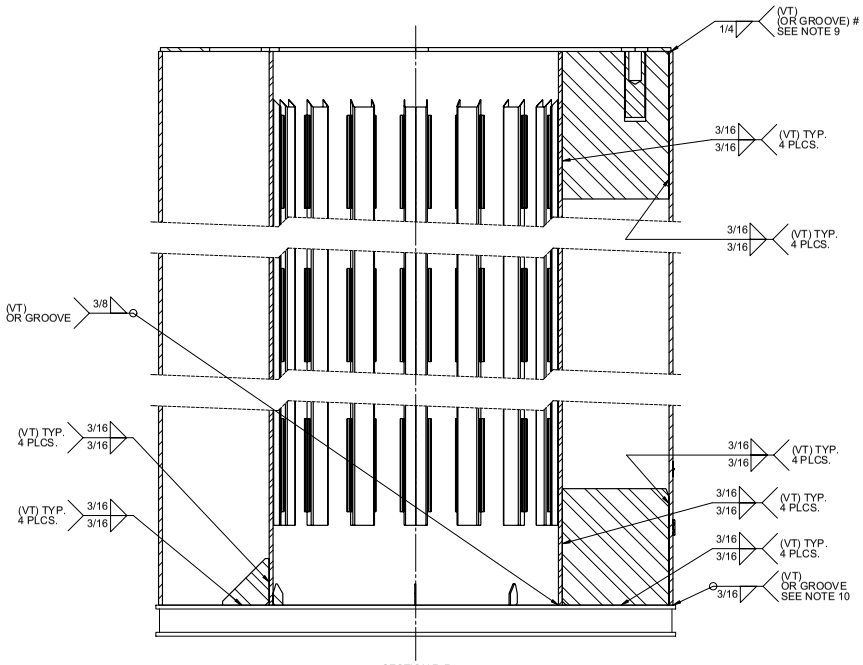

SECTION R-R

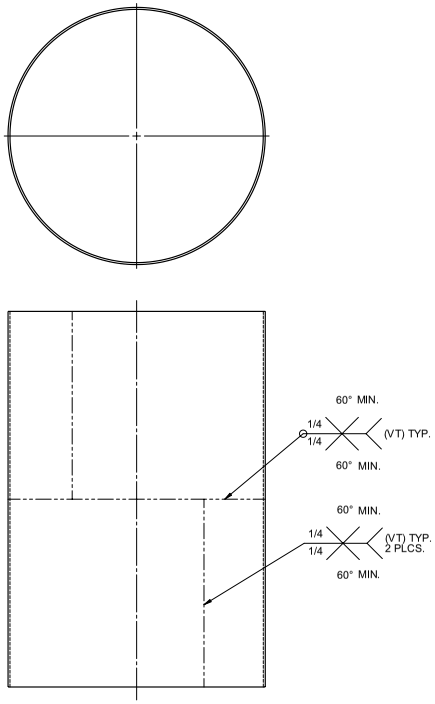

OUTER SHELL

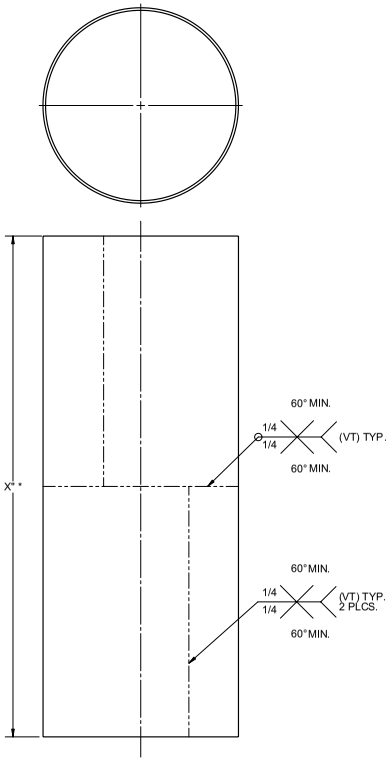

INNER SHELL

HOLTEC INTERNATIONAL
HOLTEC CENTER
555 LINCOLN DRIVE WEST
MARLTON, NJ 08053

CLIENT: GENERAL

DESCRIPTION: HI-STORM 100S VER. B CASK BODY WELDS

PROJECT NO.	COMPANION DRAWINGS:	SIZE	DRAWING NO.	SHEET	REV.
1024	-	D	4116	11	12
N/A		SCALE: NONE	FILE PATH: N:\DRAWINGS\0-LAR\1014\4\4116		

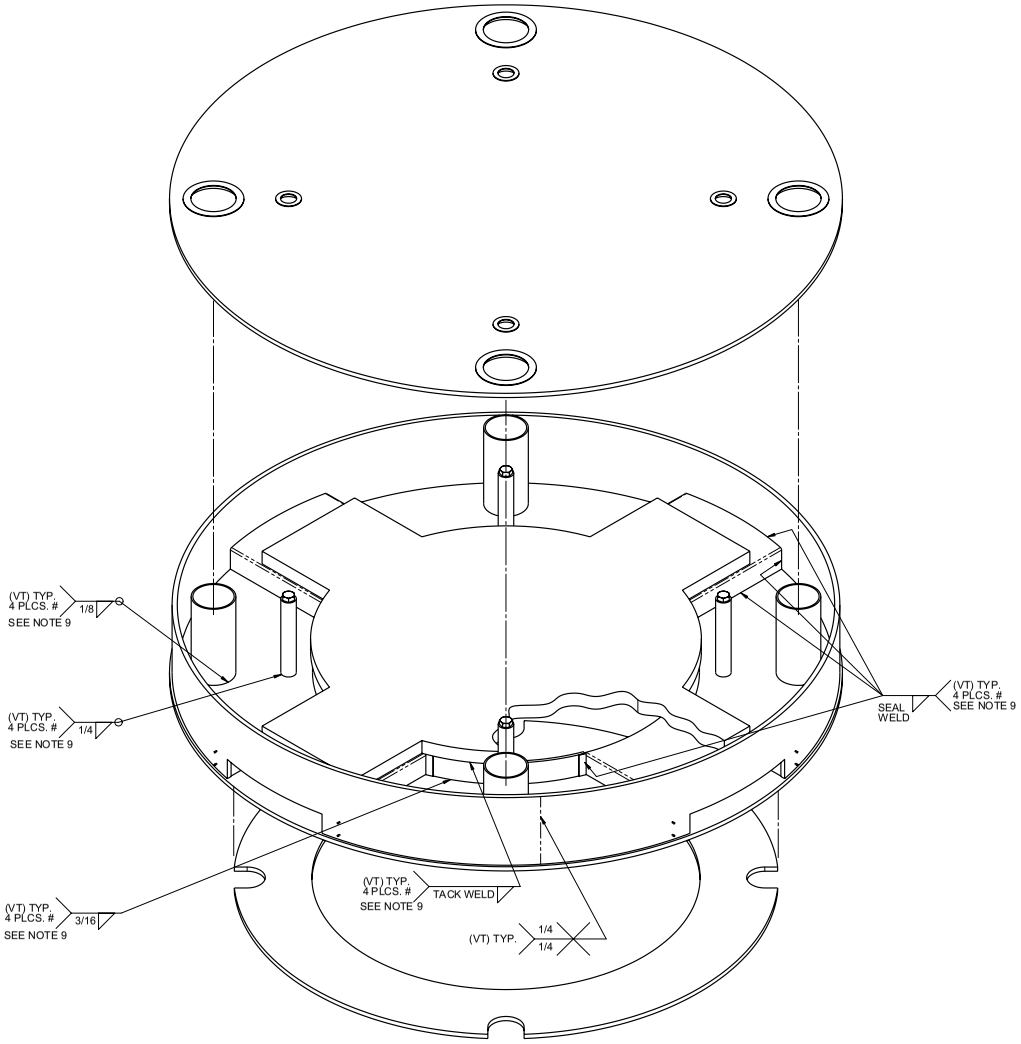

EXPLODED VIEW

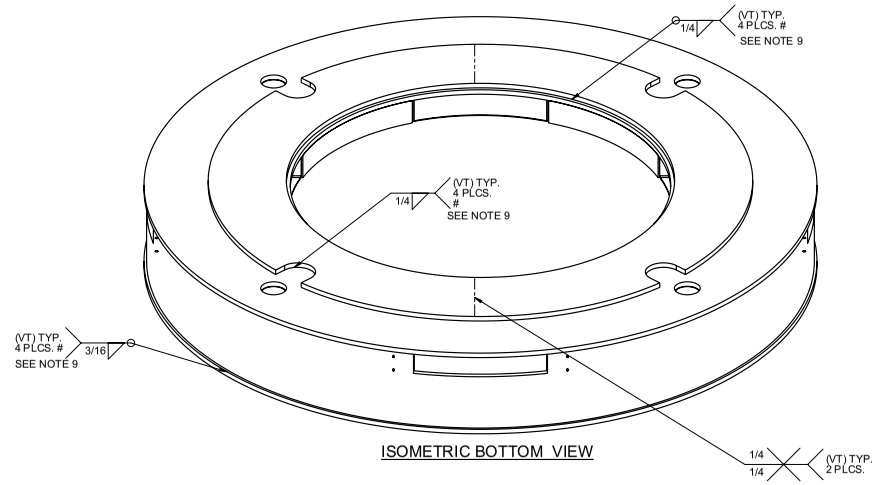

ISOMETRIC BOTTOM VIEW

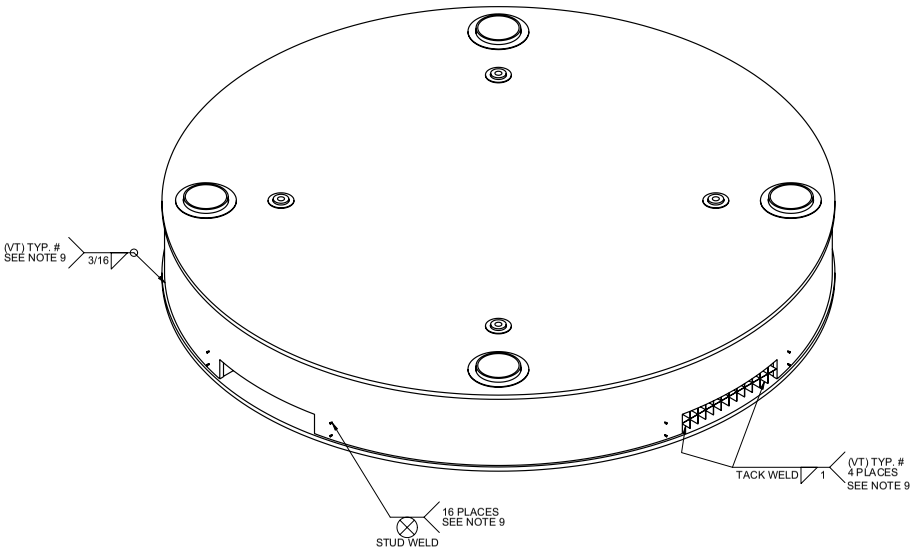

ISOMETRIC ASSEMBLY VIEW

HOLTEC INTERNATIONAL
HOLTEC CENTER
555 LINCOLN DRIVE WEST
MARLTON, NJ 08053

CLIENT	GENERAL
DESCRIPTION	HI-STORM 100S VER. B CLOSURE LID WELDS
PROJECT NO.	1024
	N/A
COMPANION DRAWINGS	–
SIZE	D
DRAWING NO.	4116
SHEET	12
REV.	12
SCALE	NONE
FILE PATH	N:\DRAWINGS\0-LAR\1014\4116

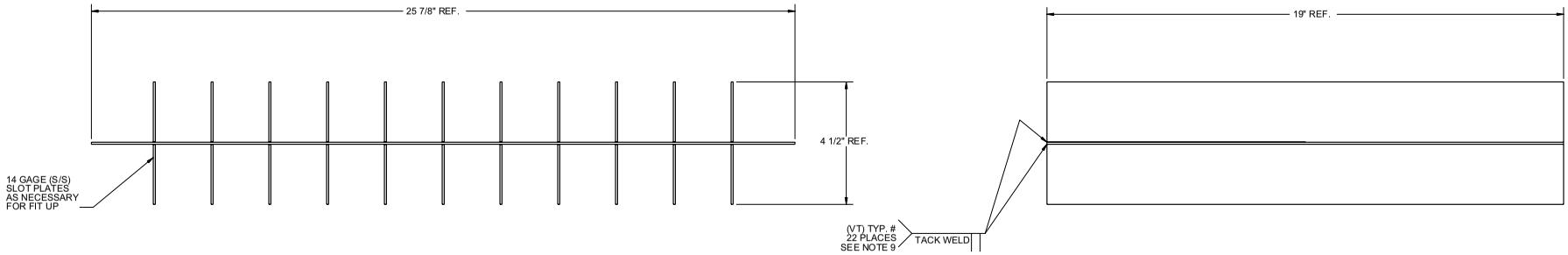

OUTLET GAMMA SHIELD CROSS ASSEMBLY

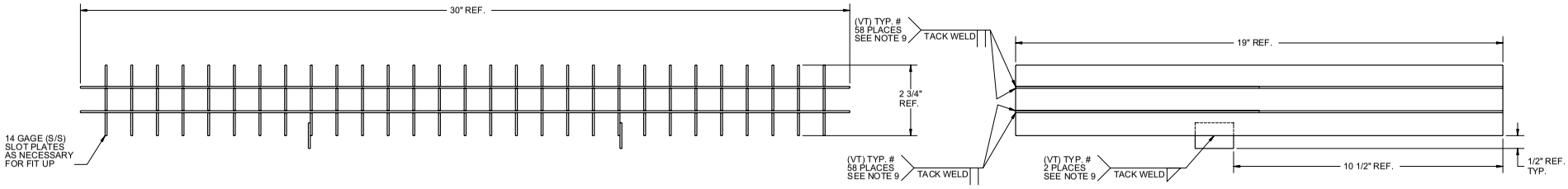

INLET GAMMA SHIELD CROSS ASSEMBLY

HOLTEC INTERNATIONAL
HOLTEC CENTER
555 LINCOLN DRIVE WEST
MARLTON, NJ 08053

CLIENT	GENERAL
DESCRIPTION	HI-STORM 100S-VER. B GAMMA CROSS SHIELD INLET & OUTLET ASSEMBLIES
PROJECT NO.	1024
	N/A
COMPANION DRAWINGS:	-
SIZE	D
DRAWING NO.	4116
SHEET	13
REV.	12
SCALE	NONE
FILE PATH	N:\DRAWINGS\0-LAR\1014-5\4116

CLIENT	ENTERGY IPEC 1
PROJECT NO. 1535	P.O. NO. 450054692
DRAWING PACKAGE I.D. 4724	TOTAL SHEETS 10

LICENSING DRAWING PACKAGE COVER SHEET

LICENSING DRAWING PACKAGE CONTENTS:

SHEET	DESCRIPTION
1	COVER SHEET
2	ASSEMBLY DRAWING AND BILL OF MATERIALS
3	OVERALL DIMENSIONS
4	POOL LID ASSEMBLY
5	BASE PLATE ASSEMBLY
6	OUTER SHELL ASSEMBLY
7	TOP FLANGE DETAILS
8	TRUNNION AND INNER SHELL ASSEMBLY
9	WATER JACKET SHELL ASSEMBLY
10	TOP LID ASSEMBLY

REVISION LOG

REV	AFFECTED DRAWING SHEET NUMBERS	SUMMARY OF CHANGES/ AFFECTED ECOs	PREPARED BY	APPROVAL DATE	VIR# †
0	INITIAL ISSUE	N/A	JJB	05/11/07	39820

† THE VALIDATION IDENTIFICATION RECORD (VIR) NUMBER IS A COMPUTER GENERATED RANDOM NUMBER WHICH CONFIRMS THAT ALL APPROPRIATE REVIEWS OF THIS DRAWING ARE DOCUMENTED IN COMPANY'S NETWORK.

NOTES:

1. THE EQUIPMENT DOCUMENTED IN THIS DRAWING PACKAGE HAS BEEN CONFIRMED BY HOLTEC INTERNATIONAL TO COMPLY WITH THE SAFETY ANALYSES DESCRIBED IN THE HI-STORM FSAR.
2. DIMENSIONAL TOLERANCES ON THIS DRAWING ARE PROVIDED SOLELY FOR LICENSING PURPOSES TO DEFINE REASONABLE LIMITS ON THE NOMINAL DIMENSIONS USED IN LICENSING WORK. HARDWARE IS FABRICATED IN ACCORDANCE WITH THE DESIGN DRAWINGS, WHICH HAVE MORE RESTRICTIVE TOLERANCES, TO ENSURE COMPONENT FIT-UP. DO NOT USE WORST-CASE TOLERANCE STACK-UP FROM THIS DRAWING TO DETERMINE COMPONENT FIT-UP.
3. THE REVISION LEVEL OF EACH INDIVIDUAL SHEET IN THE PACKAGE IS THE SAME AS THE REVISION LEVEL OF THIS COVER SHEET. A REVISION TO ANY SHEET(S) IN THIS PACKAGE REQUIRES UPDATING OF REVISION NUMBERS OF ALL SHEETS TO THE NEXT REVISION NUMBER.
4. APPLICABLE CODES AND STANDARDS ARE DELINEATED IN FSAR SECTION 2.2.4.
5. ALL WELDS REQUIRE VISUAL EXAMINATION. ADDITIONAL NDE INSPECTIONS ARE NOTED ON THE DRAWING. NDE TECHNIQUES AND ACCEPTANCE CRITERIA ARE PROVIDED IN FSAR TABLE 9.1.4.
6. UNLESS OTHEWISE NOTED, FULL PENETRATION WELDS MAY BE MADE FROM EITHER SIDE OF A COMPONENT.
7. THIS COMPONENT IS IMPORTANT-TO-SAFETY, CATEGORY A, BASED ON THE HIGHEST CLASSIFICATION OF ANY SUBCOMPONENT. SUBCOMPONENT CLASSIFICATIONS ARE PROVIDED ON THE DESIGN DRAWING.
8. ALL WELD SIZES ARE MINIMUMS EXCEPT AS ALLOWED BY APPLICABLE CODES AS CLARIFIED IN THE FSAR. FABRICATOR MAY ADD WELDS WITH HOLTEC APPROVAL.

ISOMETRIC VIEW OF HI-TRAC 100-IP1 TRANSFER CASK

"NOTICE: CERTAIN DESIGN AND OPERATIONAL FEATURES OF THIS EQUIPMENT ARE PROTECTED UNDER U.S. PATENT NO. 6,587,536. AN INFRINGEMENT BY ANY ENTITY IS UNLAWFUL."

HOLTEC INTERNATIONAL
HOLTEC CENTER
555 LINCOLN DRIVE WEST
MARLTON, NJ 08053

CLIENT	ENTERGY IPEC 1
DESCRIPTION	HI-TRAC 100D VER. IP1 ASSEMBLY
PROJECT NO. 1535	DRAWING NO. 4724 · SHEET 1 · TOTAL SHEETS 10
P.O. NO. 450054692	FILE PATH N:\DRAWINGS\1535\4724

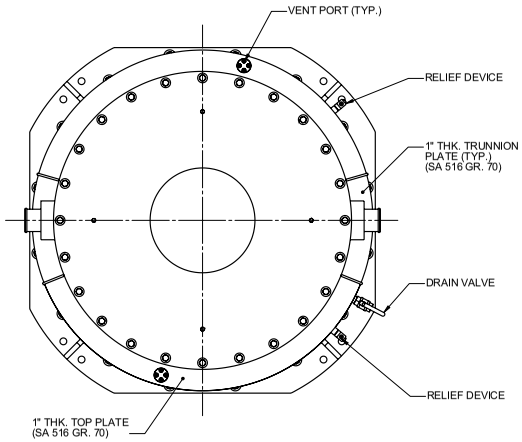

PLAN VIEW

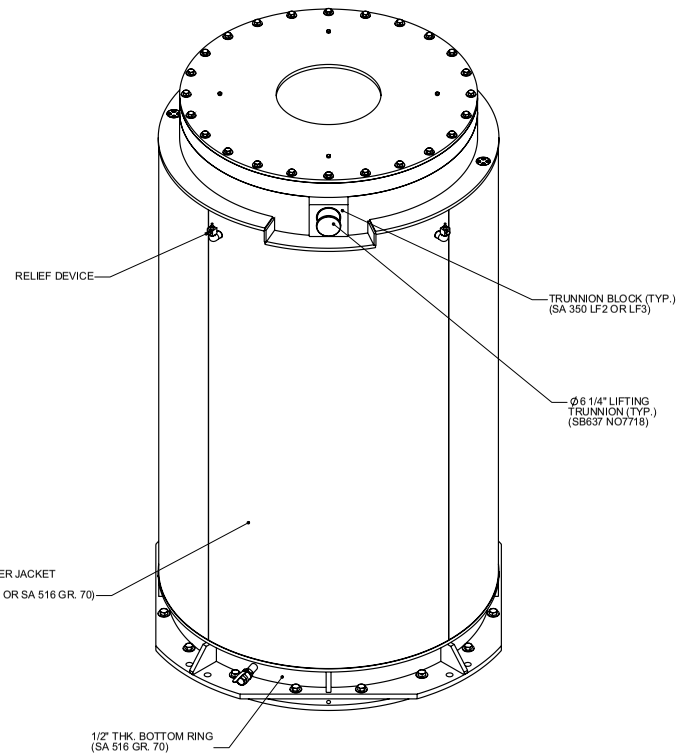

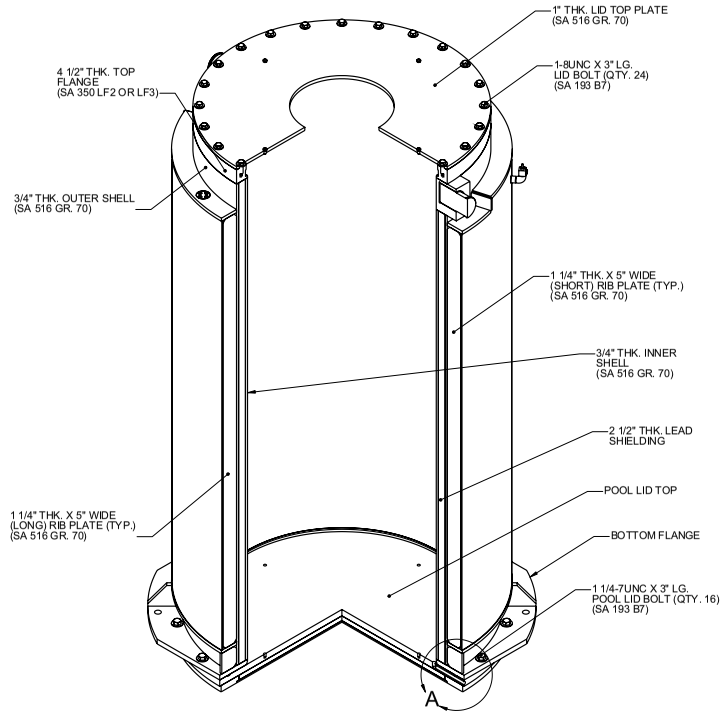

SECTION ISOMETRIC VIEW

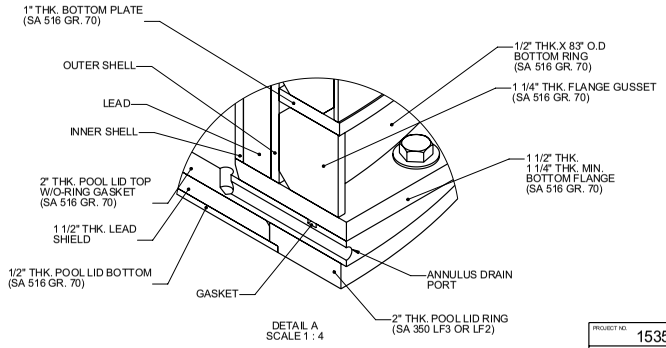

DETAIL A
SCALE 1 : 4

HOLTEC INTERNATIONAL
HOLTEC CENTER
555 LINCOLN CENTER
MARLTON, NJ 08053

CLIENT	ENTERGY IPEC 1
DESCRIPTION	HI-TRAC 100D VER. IP1 ASSEMBLY
PROJECT NO.	1535
	450054692
COMPANION DRAWINGS	-
SIZE	D
DRAWING NO.	4724
SHEET	2
REV.	0
SCALE	NONE
FILE PATH	N:\DRAWINGS\1535\4724

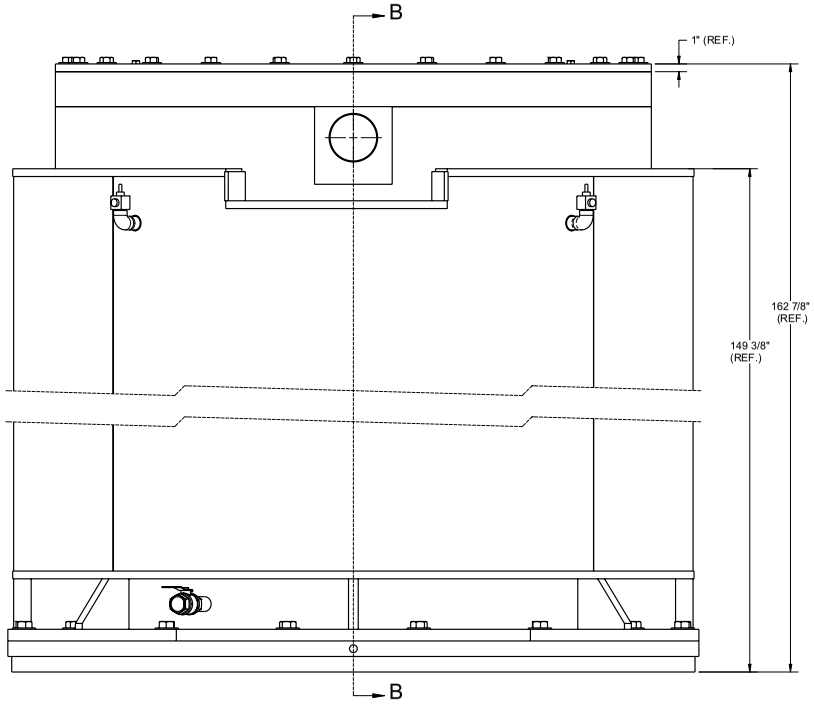

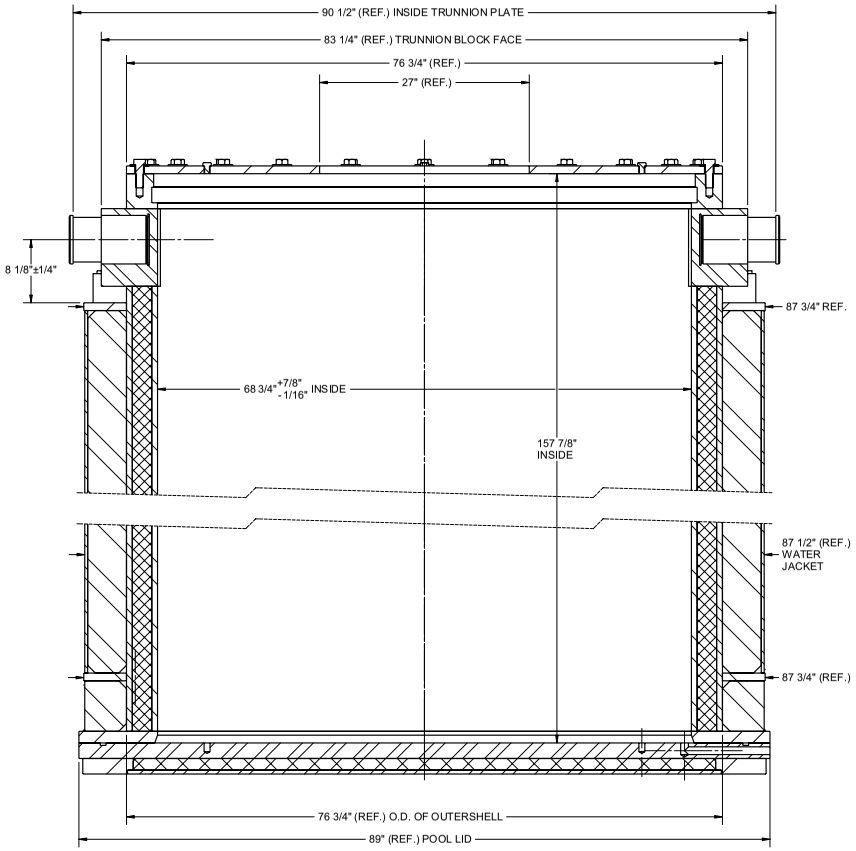

SECTION B-B

HOLTEC INTERNATIONAL
HOLTEC CENTER
555 LINCOLN CENTER
MARLTON, NJ 08053

CLIENT	ENTERGY IPEC 1
DESCRIPTION	HI-TRAC 100D VER. IP1 ASSEMBLY
PROJECT NO.	1535
	450054692
COMPANION DRAWINGS	-
SIZE	D
DRAWING NO.	4724
SHEET	3
REV.	0
SCALE	NONE
FILE PATH	N:\DRAWINGS\1535\4724

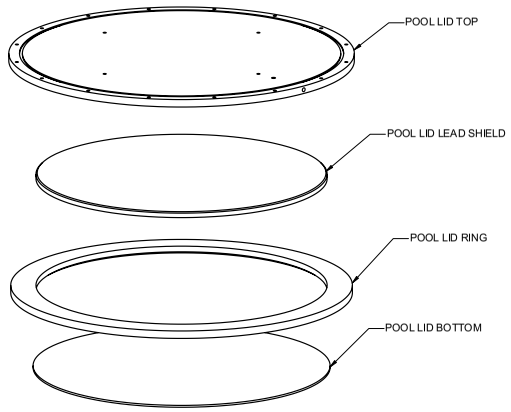

EXPLODED ISOMETRIC VIEW

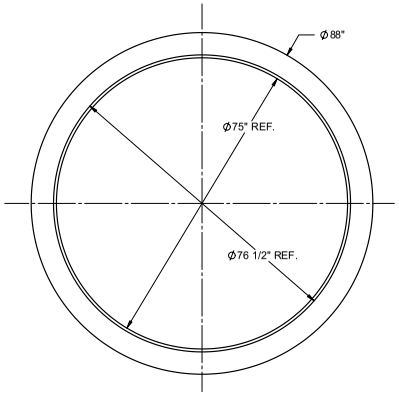

POOL LID RING

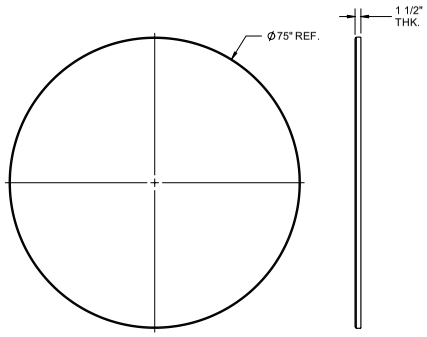

POOL LID LEAD SHIELD

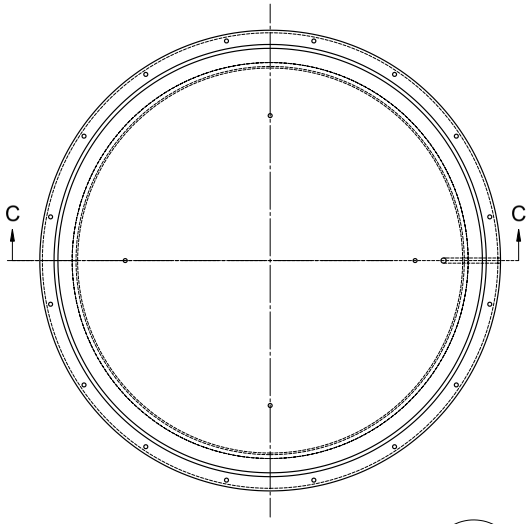

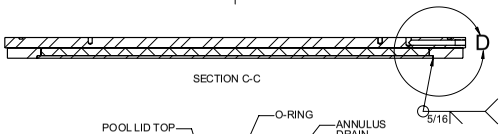

SECTION C-C

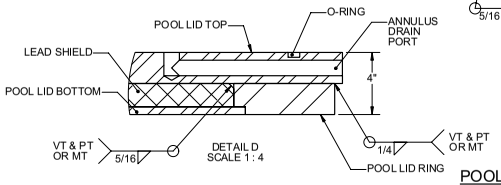

POOL LID WELDMENT

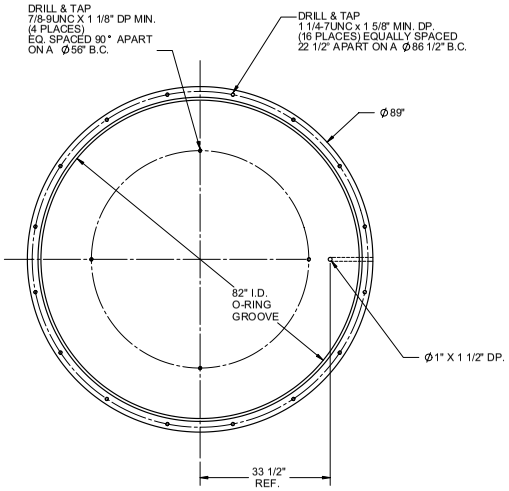

POOL LID TOP

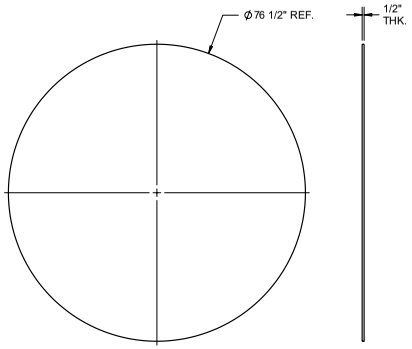

POOL LID BOTTOM

HOLTEC INTERNATIONAL
HOLTEC CENTER
555 LINCOLN CENTER
MARLTON, NJ 08053

CLIENT: ENTERGY IPEC 1

DESCRIPTION: HI-TRAC 100D VER. IP1 POOL LID ASSEMBLY

PROJECT NO.	COMPANION DRAWINGS:	SIZE	DRAWING NO.	SHEET	REV.
1535	-	D	4724	4	0
450054692		SCALE: NONE	FILE PATH: N:\DRAWINGS\1535\4724		

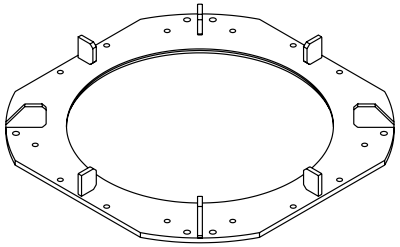

ISOMETRIC ASSEMBLY VIEW

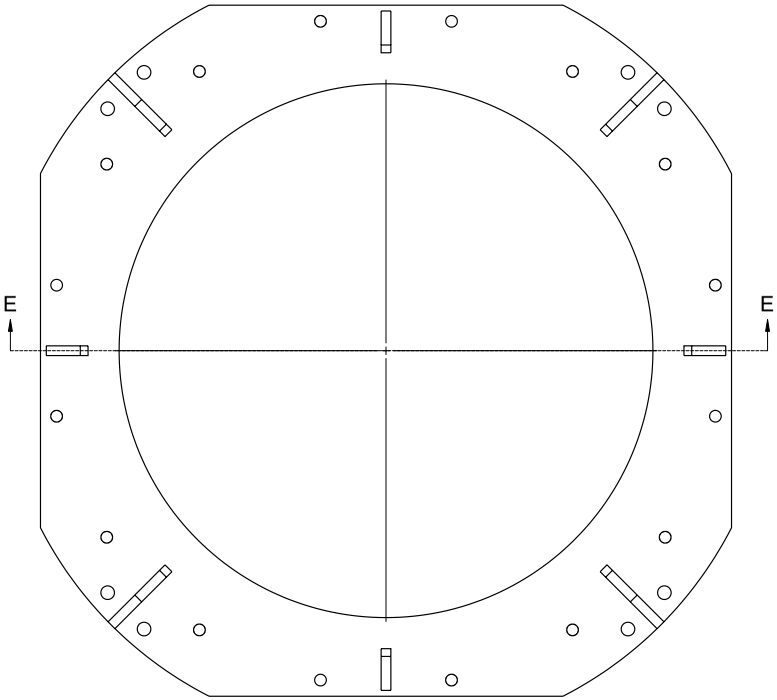

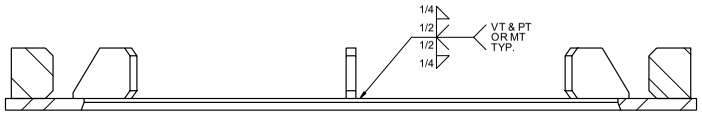

SECTION E-E
SCALE 1 : 8

BASE PLATE WELDMENT

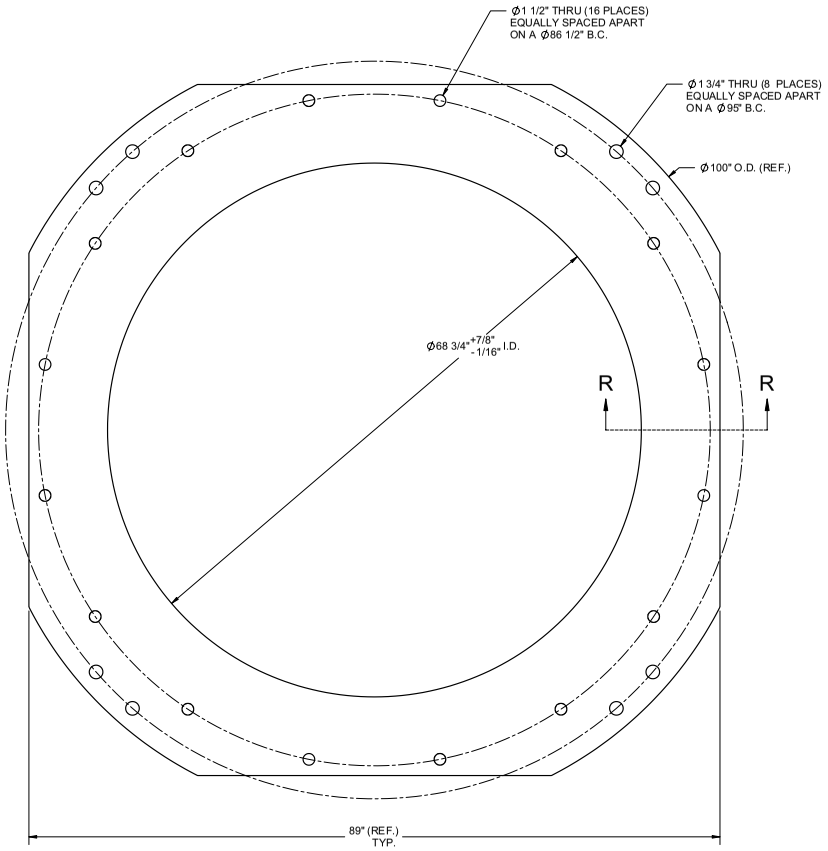

BOTTOM FLANGE

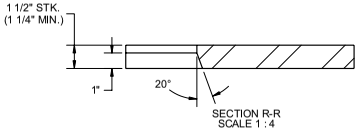

SECTION R-R
SCALE 1 : 4

HOLTEC INTERNATIONAL
HOLTEC CENTER
555 LINCOLN CENTER
MARLTON, NJ 08053

CLIENT	ENTERGY IPEC 1
DESCRIPTION	HI-TRAC-100D VER. IP1 BASE PLATE ASSEMBLY
PROJECT NO.	1535
	450054692
COMPANION DRAWINGS	
SIZE	D
DRAWING NO.	4724
SHEET	5
REV.	0
SCALE	NONE
FILE PATH	N:\DRAWINGS\1535\4724

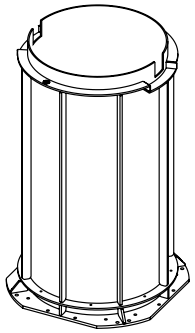

ASSEMBLY ISOMETRIC VIEW

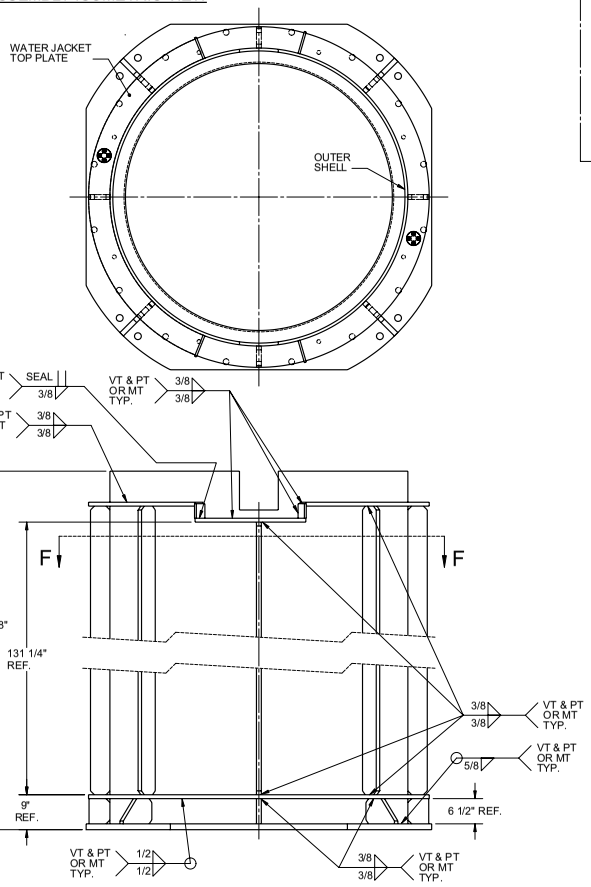

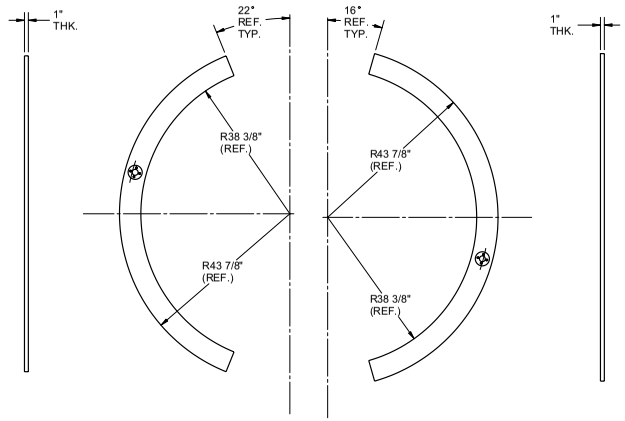

WATER JACKET TOP PLATE

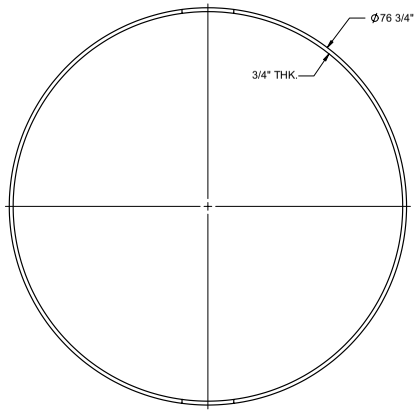

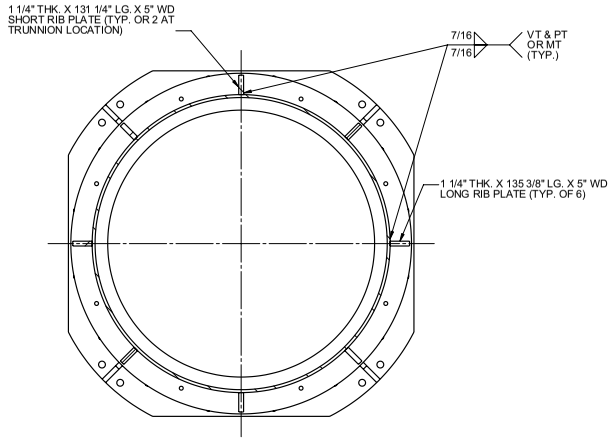

OUTER SHELL WELDMENT

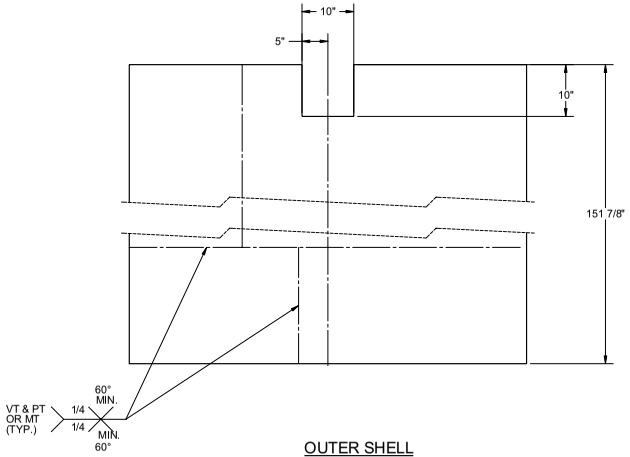

OUTER SHELL

HOLTEC INTERNATIONAL
HOLTEC CENTER
555 LINCOLN CENTER
MARLTON, NJ 08053

CLIENT: ENTERGY IPEC 1

DESCRIPTION: HI-TRAC 100D VER. IP1 OUTER SHELL ASSEMBLY

PROJECT NO.	COMPANION DRAWINGS	SIZE	DRAWING NO.	SHEET	REV.
1535	-	D	4724	6	0
450054692		SCALE: NONE	FILE PATH: N:\DRAWINGS\1535\4724		

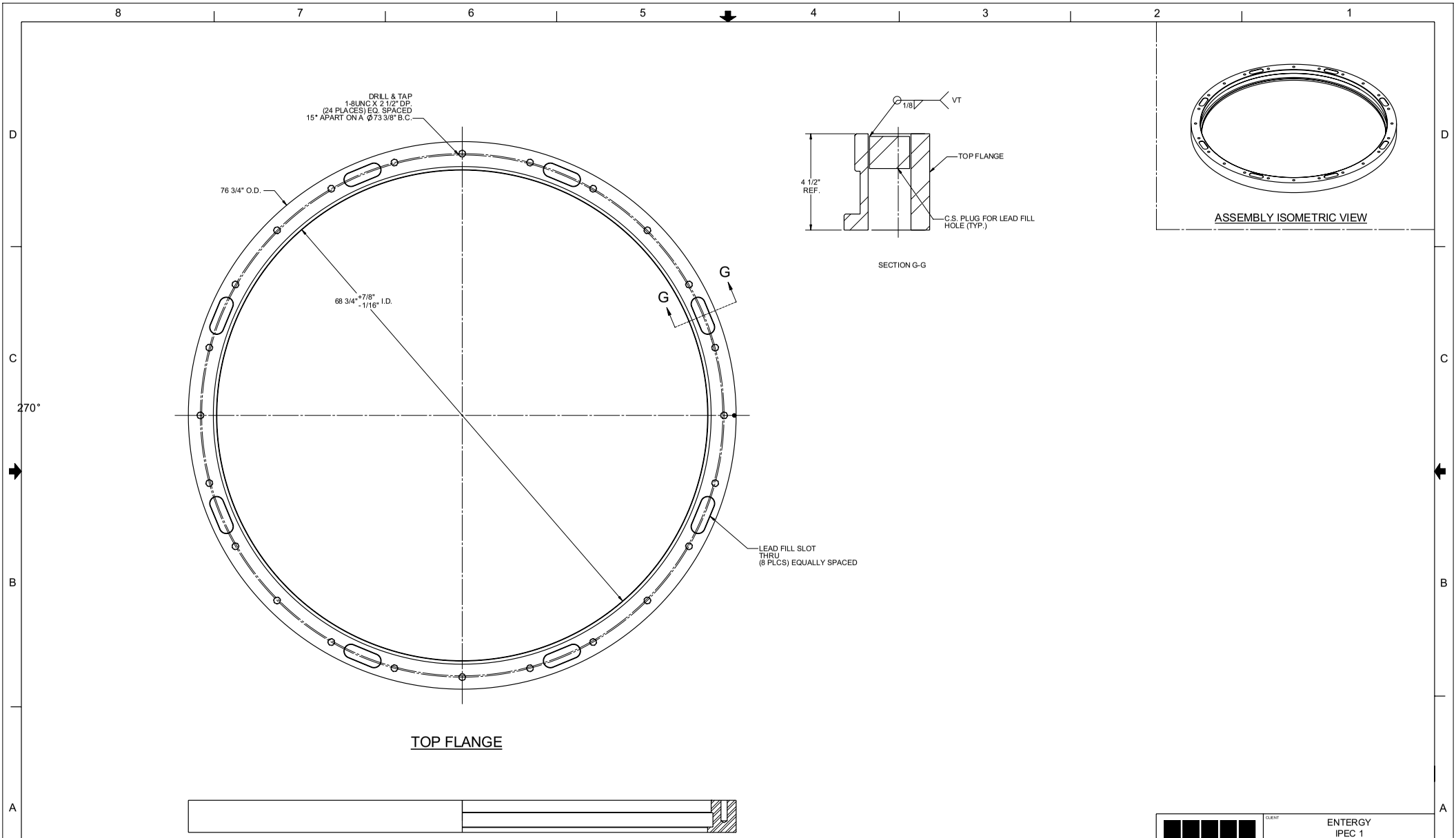

HOLTEC INTERNATIONAL
HOLTEC CENTER
555 LINCOLN CENTER
MARLTON, NJ 08053

CLIENT	ENTERGY IPEC 1
DESCRIPTION	HI-TRAC 100D VER. IP1 TOP FLANGE ASSEMBLY
PROJECT NO.	1535
	450054692
COMPANION DRAWINGS	-
SIZE	D
DRAWING NO.	4724
SHEET	7
REV.	0
SCALE	NONE
FILE PATH	N:\DRAWINGS\1535\4724

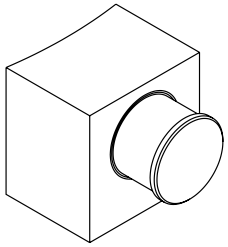

ASSEMBLY ISOMETRIC VIEW

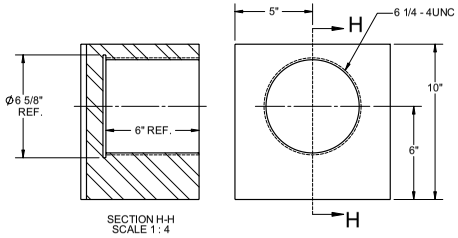

SECTION H-H
SCALE 1 : 4

TRUNNION BLOCK

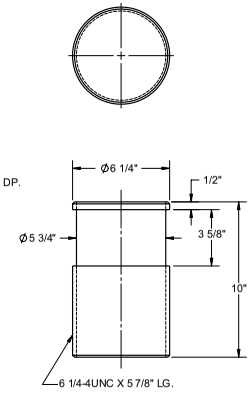

LIFTING TRUNNION

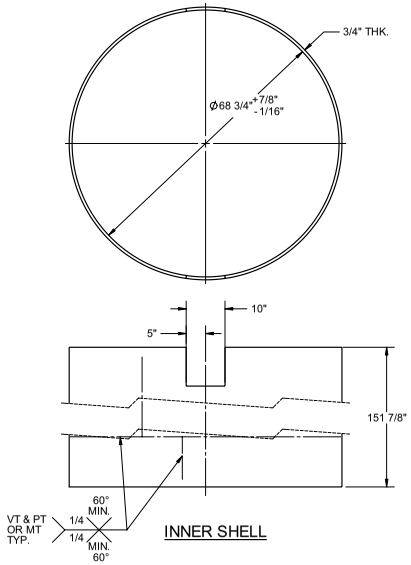

INNER SHELL

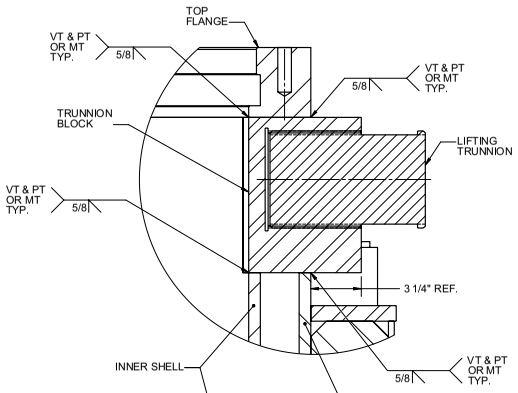

SECTION J-J
SCALE 1 : 4

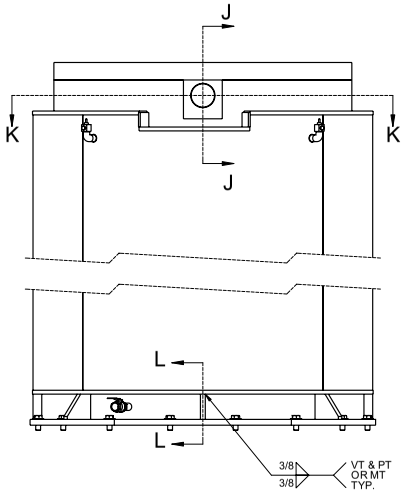

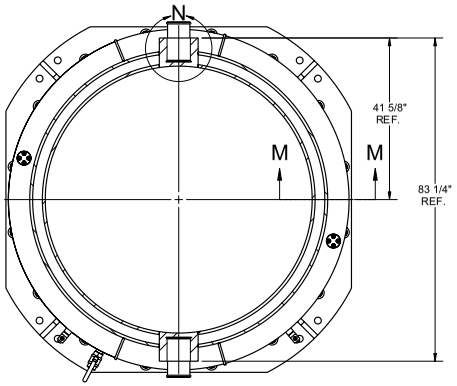

SECTION K-K

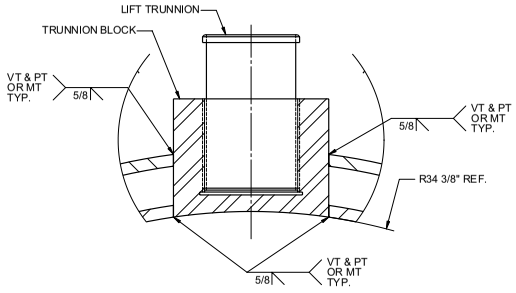

DETAIL N

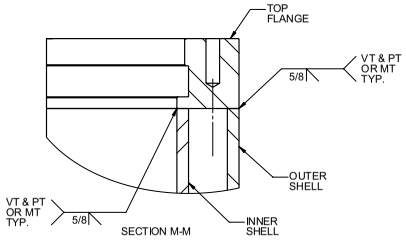

SECTION M-M

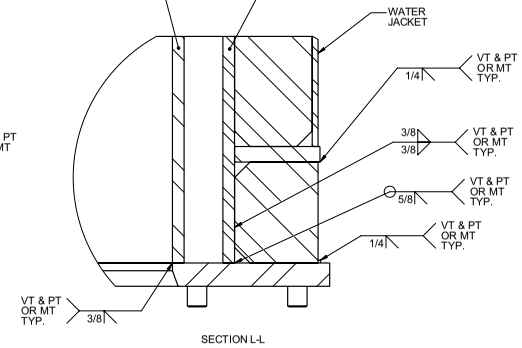

SECTION L-L

HOLTEC INTERNATIONAL
HOLTEC CENTER
555 LINCOLN CENTER
MARLTON, NJ 08053

CLIENT	ENTERGY IPEC 1
DESCRIPTION	HI-TRAC 100D VER. IP1 TRUNNION & SHELL ASSEMBLY
PROJECT NO.	1535
	450054692
COMPANION DRAWINGS	-
SIZE	D
DRAWING NO.	4724
SHEET	8
REV.	0
SCALE	NONE
FILE PATH	N:\DRAWINGS\1535\4724

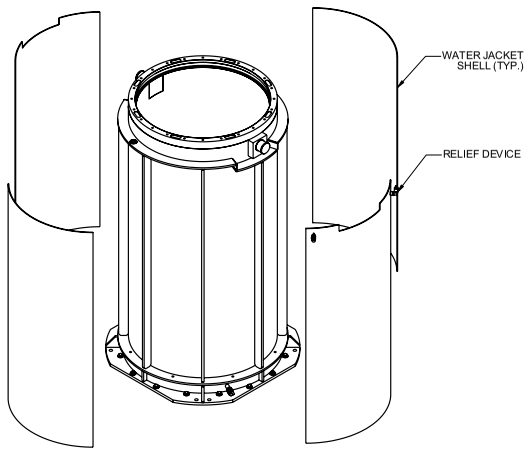

ISOMETRIC ASSEMBLY VIEW

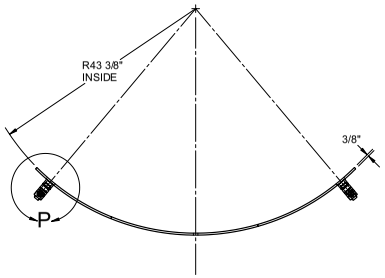

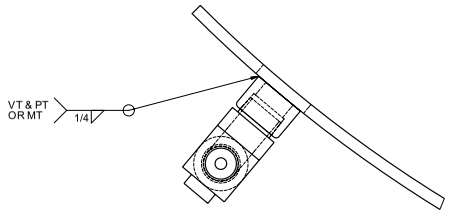

DETAIL P

RELIEF DEVICE

(ACTUAL CONFIGURATION MAY VARY)

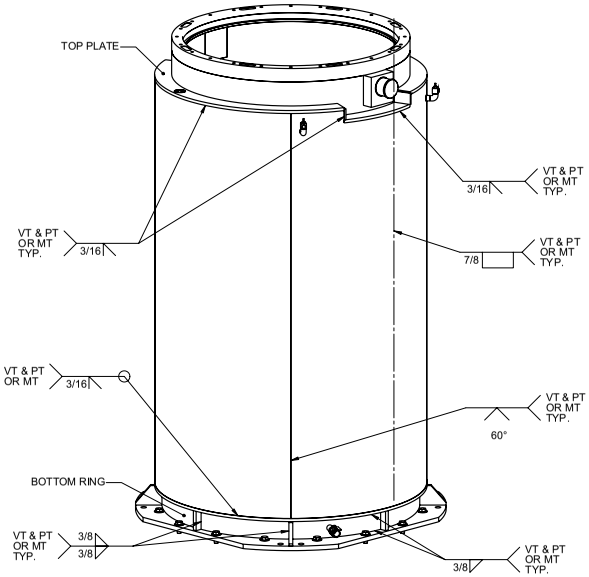

WATER JACKET WELDMENT

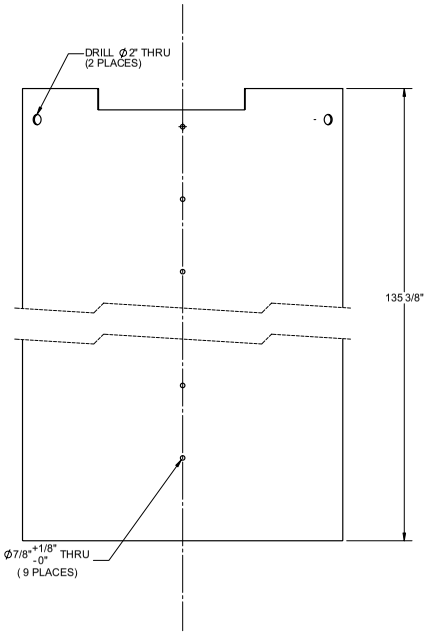

WATER JACKET SHELL

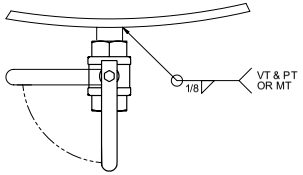

LOWER WATER JACKET DRAIN VALVE

(ACTUAL CONFIGURATION MAY VARY)

HOLTEC INTERNATIONAL
HOLTEC CENTER
555 LINCOLN CENTER
MARLTON, NJ 08053

CLIENT	ENTERGY IPEC 1
DESCRIPTION	HI-TRAC 100D VER. IP1 ASSEMBLY
PROJECT NO.	1535
	450054692
COMPANION DRAWINGS	-
SIZE	D
DRAWING NO.	4724
SHEET	9
REV.	0
SCALE	NONE
FILE PATH	N:\DRAWINGS\1535\4724

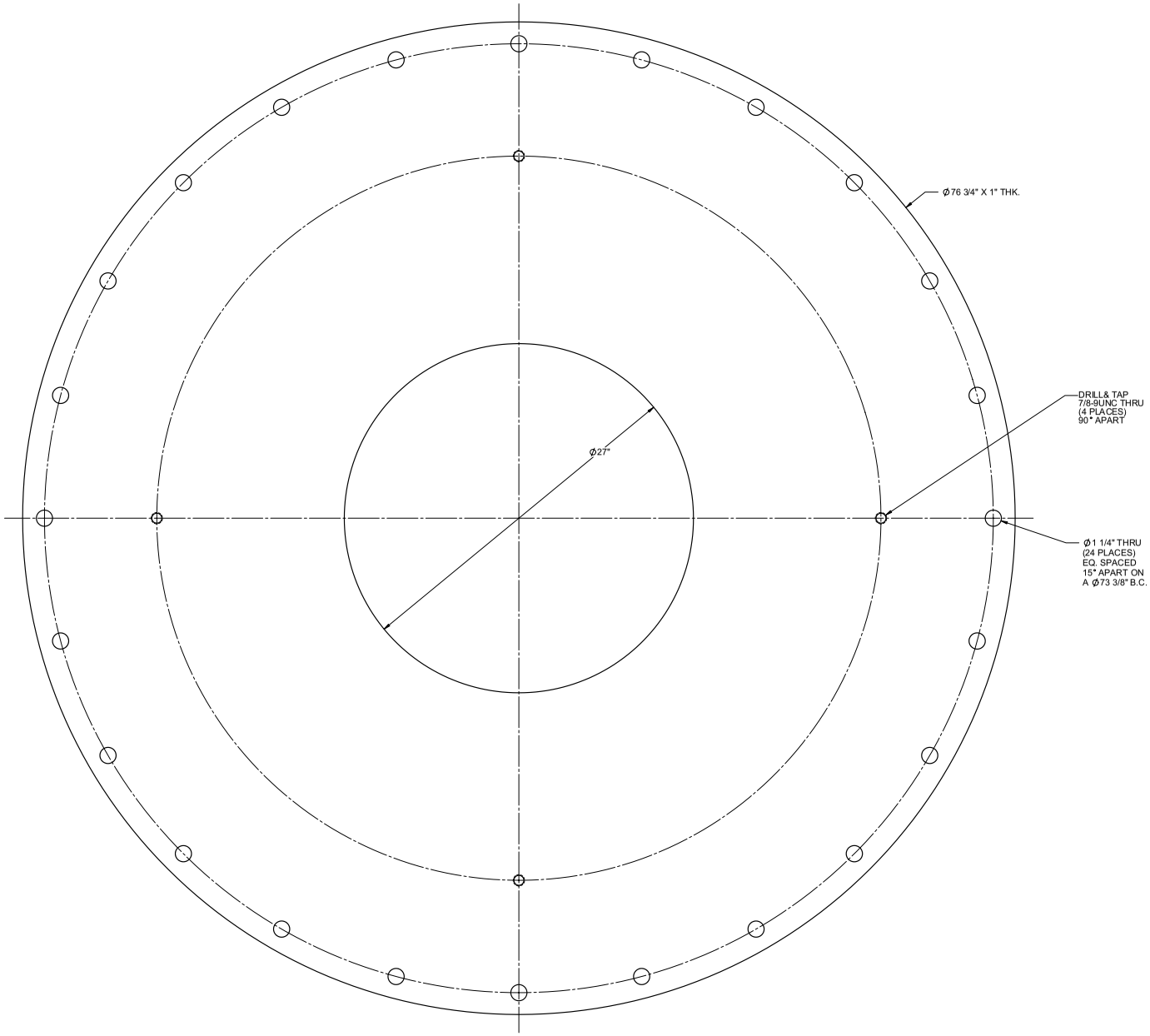

TOP CLOSURE LID

HOLTEC INTERNATIONAL
HOLTEC CENTER
555 LINCOLN CENTER
MARLTON, NJ 08053

PROJECT NO.	1535
	450054692
COMPANION DRAWINGS:	-
CLIENT	ENTERGY IPEC - 1
DESCRIPTION	HI-TRAC 100D VER. IP1 TOP CLOSURE LID
SIZE	D
DRAWING NO.	4724
SHEET	10
REV.	0
SCALE	NONE
FILE PATH	N:\DRAWINGS\1535\4724

SUPPLEMENT 1.II

GENERAL DESCRIPTION OF HI-STORM 100 SYSTEM FOR IP1

1.II.0 GENERAL INFORMATION

The HI-STORM 100 System has been expanded to include options specific for Indian Point Unit 1. Indian Point Unit 1 (IP1) fuel assemblies are approximately 137 inches in length which is considerably shorter than most PWR fuel assemblies. As a result of the shorter fuel assemblies and a reduced crane capacity at IP1, the HI-STORM 100 System now includes a shorter HI-STORM overpack, MPC, and HI-TRAC for IP1. Information pertaining to the HI-STORM 100 System modifications for IP1 is generally contained in the "II" supplements to each chapter of this FSAR. Certain sections of the main FSAR are also affected and are appropriately modified for continuity with the "II" supplements. Unless superseded or specifically modified by information in the "II" supplements, the information in the main FSAR is applicable to the HI-STORM 100 System for use at IP1.

1.II.1 INTRODUCTION

The HI-STORM 100 System as deployed at Indian Point Unit 1 will consist of a HI-STORM 100S Version B overpack, an MPC-32, and a HI-TRAC 100D.

1.II.2 GENERAL DESCRIPTION OF HI-STORM 100 SYSTEM FOR IP1

1.II.2.1 System Characteristics

The HI-STORM 100S Version B, MPC-32, and HI-TRAC 100D have been shortened for use at Indian Point Unit 1.

The HI-STORM 100S Version B overpack was shortened by approximately 33 inches. The other physical characteristics (e.g. inlet and outlet vents, inner and outer shells, and lid) of the HI-STORM 100S Version B overpack remain unchanged. This reduction in height creates another variant of the HI-STORM 100S Version B overpack, differing from the others variants by only height and weight. The variant for IP1 is referred to as the HI-STORM 100S-185 and is approximately 185 inches high.

The MPC-32 basket and shell, for use at IP1, were shortened by approximately 33 inches. The neutron absorber panels and sheathing were shortened by approximately 20 inches. The neutron absorber panels in the MPC-32 for IP1 effectively cover the entire height of the basket. Since the primary features that define an MPC-32 (e.g. cell opening, cell pitch, basket wall thickness, neutron absorber thickness and B-10 loading) are unchanged for use at IP1, the basket is still designated as an MPC-32. The MPC-32 for IP1 may be used with both the HI-STORM 100S-185 and the standard height HI-STORM 100S Version B (the HI-STORM 100S-218 also referred to as the HI-STORM 100S Version B (218)).

HOLTEC INTERNATIONAL COPYRIGHTED MATERIAL

The HI-TRAC 100D was also shortened by approximately 33 inches. Due to a crane capacity of 75 tons at IP1 it was also necessary to reduce the thickness of the outer steel shell by a 1/4 inch and reduce the lead thickness by 3/8 inch. The water jacket thickness, pool lid, and bottom flange were not modified. This variant of the HI-TRAC 100D is referred to as the HI-TRAC 100D Version IP1.

Table 1.II.1 contains the key parameters for the HI-STORM 100 System that are unique for its use at IP1.

1.II.2.2 Operational Characteristics

With the exception of the helium fill requirements specified in Table 1.II.1, the operational characteristics of the IP1 specific HI-STORM 100 System and the generic HI-STORM 100 System (as described in Section 1.2.2) are identical.

I.II.2.2.1 Criticality Prevention

Criticality is controlled by geometry and neutron absorbing materials in the fuel basket. The MPC-32 for IP1 does not rely on soluble boron credit during loading or the assurance that water cannot enter the MPC during storage to meet the stipulated criticality limits.

Each MPC model is equipped with neutron absorber plates affixed to the fuel cell walls as shown on the drawings in Section 1.5. The minimum ^{10}B areal density specified for the neutron absorber in each MPC model is shown in Table 1.2.2 in Section 1.2. These values are chosen to be consistent with the assumptions made in the criticality analyses.

1.II.2.3 Cask Contents

The MPC-32 and MPC-32F for IP1 are designed to accommodate up to thirty-two IP1 PWR fuel assemblies. All thirty-two of these fuel assemblies may be classified as intact or damaged fuel assemblies. Fuel debris is not permitted to be stored in the MPC-32 or MPC-32F for IP1.

1.II.3 IDENTIFICATION OF AGENTS AND CONTRACTORS

Same as in Section 1.3.

1.II.4 GENERIC CASK ARRAYS

Same as in Section 1.4.

1.II.5 DRAWINGS

The drawings of the HI-STORM 100S Version B, MPC enclosure vessel, and MPC-32 provided in Section 1.5, contain notes regarding the IP1 specific variants. A separate drawing is provided in Section 1.5 for the HI-TRAC 100D Version IP1.

Table 1.II.1
KEY PARAMETERS FOR HI-STORM 100 SYSTEM SPECIFIC TO IP1

Item	*Value*
IP1 MPC-32/32F storage capacity	*Up to 32 intact or damaged stainless steel clad IP1 fuel assemblies with or without non-fuel hardware.*
MPC internal environment Helium fill (99.995% fill helium purity) *MPC-32/32F (heat load ≤ 8.0 kW)*	*(all pressure ranges are at a reference temperature of 70°F)* *≥ 22.0 psig and ≤ 33.3 psig*

Table 2.1.3
PWR FUEL ASSEMBLY CHARACTERISTICS (Note 1)

Fuel Assembly Array/ Class	**14x14 A**	**14x14 B**	**14x14 C**	**14x14 D**	**14x14E**
Clad Material (Note 2)	ZR	ZR	ZR	SS	SS
Design Initial U (kg/assy.) (Note 3)	≤ 365	≤ 412	≤ 438	≤ 400	≤ 206
Initial Enrichment (MPC-24, 24E, and 24EF without soluble boron credit) (wt % ^{235}U) (Note 7)	≤ 4.6 (24) ≤ 5.0 (24E/24EF)	≤ 4.6 (24) ≤ 5.0 (24E/24EF)	≤ 4.6 (24) ≤ 5.0 (24E/24EF)	≤ 4.0 (24) ≤ 5.0 (24E/24EF)	*N/A* ~~≤ 5.0 (24)~~ *N/A* ~~≤ 5.0 (24E/24EF)~~
Initial Enrichment (MPC-24, 24E, 24EF, 32 or 32F with soluble boron credit - see Note 5) (wt % ^{235}U)	≤ 5.0	≤ 5.0	≤ 5.0	≤ 5.0	~~≤ 5.0~~ *≤ 4.5 (MPC-32/32F only – Note 9)*
No. of Fuel Rod Locations	179	179	176	180	173
Fuel Clad O.D. (in.)	≥ 0.400	≥ 0.417	≥ 0.440	≥ 0.422	≥ 0.3415
Fuel Clad I.D. (in.)	≤ 0.3514	≤ 0.3734	≤ 0.3880	≤ 0.3890	≤ 0.3175
Fuel Pellet Dia. (in.) (Note 8)	≤ 0.3444	≤ 0.3659	≤ 0.3805	≤ 0.3835	≤ 0.3130
Fuel Rod Pitch (in.)	≤ 0.556	≤ 0.556	≤ 0.580	≤ 0.556	Note 6
Active Fuel Length (in.)	≤ 150	≤ 150	≤ 150	≤ 144	≤ 102
No. of Guide and/or Instrument Tubes	17	17	5 (Note 4)	16	0
Guide/Instrument Tube Thickness (in.)	≥ 0.017	≥ 0.017	≥ 0.038	≥ 0.0145	N/A

HOLTEC INTERNATIONAL COPYRIGHTED MATERIAL

Table 2.1.3 (continued)
PWR FUEL ASSEMBLY CHARACTERISTICS

Notes:

1. All dimensions are design nominal values. Maximum and minimum dimensions are specified to bound variations in design nominal values among fuel assemblies within a given array/class.

2. See Table 1.0.1 for the definition of "ZR."

3. Design initial uranium weight is the nominal uranium weight specified for each assembly by the fuel manufacturer or reactor user. For each PWR fuel assembly, the total uranium weight limit specified in this table may be increased up to 2.0 percent for comparison with users' fuel records to account for manufacturer's tolerances.

4. Each guide tube replaces four fuel rods.

5. Soluble boron concentration per Tables 2.1.14 and 2.1.16, as applicable.

6. This fuel assembly array/class includes only the Indian Point Unit 1 fuel assembly. This fuel assembly has two pitches in different sectors of the assembly. These pitches are 0.441 inches and 0.453 inches.

7. For those MPCs loaded with both intact fuel assemblies and damaged fuel assemblies or fuel debris, the maximum initial enrichment of the intact fuel assemblies, damaged fuel assemblies and fuel debris is 4.0 wt.% ^{235}U.

8. Annular fuel pellets are allowed in the top and bottom 12" of the active fuel length.

9. *This fuel assembly array/class includes only the Indian Point Unit 1 fuel assembly. This assembly class has been analyzed throughout this FSAR in all PWR MPCs, however it is only to be loaded into the MPC-32/32F.*

HOLTEC INTERNATIONAL COPYRIGHTED MATERIAL

Table 2.1.16

Soluble Boron Requirements for MPC-32 and MPC-32F Wet Loading and Unloading Operations

Fuel Assembly Array/Class ***(Note 2)***	**All Intact Fuel Assemblies**		**One or More Damaged Fuel Assemblies or Fuel Debris**	
	Max. Initial Enrichment ≤ 4.1 wt.% ^{235}U (ppmb)	**Max. Initial Enrichment 5.0 wt.% ^{235}U (ppmb)**	**Max. Initial Enrichment ≤ 4.1 wt.% ^{235}U (ppmb)**	**Max. Initial Enrichment 5.0 wt.% ^{235}U (ppmb)**
14x14A/B/C/D~~/E~~	1,300	1,900	1,500	2,300
15x15A/B/C/G	1,800	2,500	1,900	2,700
15x15D/E/F/H	1,900	2,600	2,100	2,900
16x16A	1,300	1,900	1,500	2,300
17x17A/B/C	1,900	2,600	2,100	2,900

Note*s*:

1. For maximum initial enrichments between 4.1 wt% and 5.0 wt% ^{235}U, the minimum soluble boron concentration may be determined by linear interpolation between the minimum soluble boron concentrations at 4.1 wt% and 5.1 wt% ^{235}U.

2. The soluble boron requirements for array/class 14x14E are specified in Supplement 2.II.

Table 2.1.21

LIMITS FOR MATERIAL TO BE STORED IN MPC-32

PARAMETER	**VALUE (Notes 1 *and 2*)**	
Fuel Type	Uranium oxide, PWR intact fuel assemblies meeting the limits in Table 2.1.3 for the applicable fuel assembly array/class.	Uranium oxide, PWR damaged fuel assemblies meeting the limits in Table 2.1.3 for the applicable fuel assembly array/class.
Cladding Type	ZR or Stainless Steel (SS) assemblies as specified in Table 2.1.3 for the applicable array/class	ZR or Stainless Steel (SS) assemblies as specified in Table 2.1.3 for the applicable array/class
Maximum Initial Enrichment per Assembly	As specified in Table 2.1.3 for the applicable fuel assembly array/class	As specified in Table 2.1.3 for the applicable fuel assembly array/class
Post-irradiation Cooling Time and Average Burnup per Assembly	ZR clad: As specified in Section 2.1.9.1 SS clad: ≥ 9 years and ≤ 30,000 MWD/MTU or ≥ 20 years and ≤ 40,000 MWD/MTU	ZR clad: As specified in Section 2.1.9.1 SS clad: ≥ 9 years and ≤ 30,000 MWD/MTU or ≥ 20 years and ≤ 40,000 MWD/MTU
Decay Heat Per Fuel Storage Location	ZR-clad: As specified in Section 2.1.9.1 SS-clad: ≤ 500 Watts	ZR-clad: As specified in Section 2.1.9.1 SS-clad: ≤ 500 Watts
Non-fuel hardware post-irradiation cooling time and burnup	As specified in Table 2.1.25	As specified in Table 2.1.25
Fuel Assembly Length	≤ 176.8 in. (nominal design)	≤ 176.8 in. (nominal design)
Fuel Assembly Width	≤ 8.54 in. (nominal design)	≤ 8.54 in. (nominal design)
Fuel Assembly Weight	≤ 1,680 lbs (including non-fuel hardware)	≤ 1,680 lbs (including DFC and non-fuel hardware)

Table 2.1.21 (cont'd)

LIMITS FOR MATERIAL TO BE STORED IN MPC-32

PARAMETER	VALUE
Other Limits	▪ Quantity is limited to up to 32 PWR intact fuel assemblies and/or up to eight (8) damaged fuel assemblies in DFCs in fuel cell locations 1, 4, 5, 10, 23, 28, 29, and/or 32, with the balance intact fuel assemblies up to a total of 32. ▪ Fuel debris is not permitted for storage in MPC-32. ▪ One NSA is permitted in MPC-32. ▪ BPRAs, TPDs, WABAs, water displacement guide tube plugs, orifice rod assemblies, and/or vibration suppressor inserts may be stored with fuel assemblies in any fuel cell location. ▪ CRAs, RCCAs, CEAs, NSAs, and/or APSRs may be stored with fuel assemblies in fuel cell locations 13, 14, 19, and/or 20. ▪ Soluble boron requirements during wet loading and unloading are specified in Table 2.1.16.

NOTES:

1. A fuel assembly must meet the requirements of any one column and the other limitations to be authorized for storage.

2. *The requirements stated in this table, with the exception of fuel assembly length, width, and weight, do not apply to array/class 14x14E, Indian Point Unit 1 fuel. Supplement 2.II provides the limits for array/class 14x14E fuel assemblies to be stored in the MPC-32.*

Table 2.1.24

LIMITS FOR MATERIAL TO BE STORED IN MPC-32F

PARAMETER	**VALUE (Notes 1 *and 2*)**	
Fuel Type	Uranium oxide, PWR intact fuel assemblies meeting the limits in Table 2.1.3 for the applicable fuel assembly array/class	Uranium oxide, PWR damaged fuel assemblies and fuel debris in DFCs meeting the limits in Table 2.1.3 for the applicable fuel assembly array/class
Cladding Type	ZR or Stainless Steel (SS) as specified in Table 2.1.3 for the applicable fuel assembly array/class	ZR or Stainless Steel (SS) as specified in Table 2.1.3 for the applicable fuel assembly array/class
Maximum Initial Enrichment per Assembly	As specified in Table 2.1.3	As specified in Table 2.1.3
Post-irradiation Cooling Time, Average Burnup, and Minimum Initial Enrichment per Assembly	ZR clad: As specified in Section 2.1.9.1 SS clad: ≥ 9 years and ≤ 30,000 MWD/MTU or ≥ 20 years and ≤ 40,000MWD/MTU	ZR clad: As specified in Section 2.1.9.1 SS clad: ≥ 9 years and ≤ 30,000 MWD/MTU or ≥ 20 years and ≤ 40,000MWD/MTU
Decay Heat Per Fuel Storage Location	ZR clad: As specified in Section 2.1.9.1 SS clad: ≤ 500 Watts	ZR clad: As specified in Section 2.1.9.1 SS clad: ≤ 500 Watts
Non-fuel hardware post-irradiation Cooling Time and Burnup	As specified in Table 2.1.25	As specified in Table 2.1.25
Fuel Assembly Length	≤ 176.8 in. (nominal design)	≤ 176.8 in. (nominal design)
Fuel Assembly Width	≤ 8.54 in. (nominal design)	≤ 8.54 in. (nominal design)
Fuel Assembly Weight	≤ 1,680 lbs (including non-fuel hardware)	≤ 1,680 lbs (including DFC and non-fuel hardware)

Table 2.1.24 (cont'd)

LIMITS FOR MATERIAL TO BE STORED IN MPC-32F

PARAMETER	VALUE
Other Limitations	▪ Quantity is limited to up to 32 PWR intact fuel assemblies and/or up to eight (8) damaged fuel assemblies in DFCs in fuel cell locations 1, 4, 5, 10, 23, 28, 29, and/or 32, with the balance intact fuel assemblies up to a total of 32. ▪ One NSA is permitted for storage in MPC-32. ▪ BPRAs, TPDs, WABAs, water displacement guide tube plugs, orifice rod assemblies, and/or vibration suppressor inserts may be stored with fuel assemblies in any fuel cell location. ▪ CRAs, RCCAs, CEAs, NSAs, and/or APSRs may be stored with fuel assemblies in fuel cell locations 13, 14, 19, and/or 20. ▪ Soluble boron requirements during wet loading and unloading are specified in Table 2.1.16.

NOTES:

1. A fuel assembly must meet the requirements of any one column and the other limitations to be authorized for storage.

2. *The requirements stated in this table, with the exception of fuel assembly length, width, and weight, do not apply to array/class 14x14E, Indian Point Unit 1 fuel. Supplement 2.II provides the limits for array/class 14x14E fuel assemblies to be stored in the MPC-32F.*

SUPPLEMENT 2.II

PRINCIPAL DESIGN CRITERIA FOR THE HI-STORM 100 SYSTEM FOR IP1

2.II.0 OVERVIEW OF THE PRINCIPAL DESIGN CRITERIA

General

A description of the HI-STORM 100 System as expanded for Indian Point Unit 1 (IP1) is provided in Supplement 1.II. The design criteria presented in Section 2.0 for all components are applicable to the HI-STORM 100 System at IP1 unless otherwise noted below. Drawings of the components shortened for IP1 (HI-STORM 100S Version B, MPC-32, and HI-TRAC 100D Version IP1) are provided in Section 1.5.

Thermal

The MPC-32 for IP1 is designed for a bounding uniformly distributed thermal source term. Regionalized fuel loading is not considered in the MPC-32 for IP1.

Shielding

The HI-TRAC 100D Version IP1 transfer cask provides shielding to maintain occupational exposures ALARA in accordance with 10CFR20, while also maintaining the maximum load on the plant's crane hook to below 75 tons.

2.II.1 SPENT FUEL TO BE STORED

~~*Indian Point Unit 1 fuel, array/class 14x14E, is authorized for loading into the MPC-24, MPC-24E, and MPC-24EF as described in Chapter 2.*~~ *IP1 fuel is* ~~*also*~~ *authorized for loading into the IP1 MPC-32 as outlined in this supplement. The requirements in this supplement supersede the requirements in Chapter 2 for the MPC-32 for array/class 14x14E. Requirements from Chapter 2 that are not superseded in this supplement remain in effect.*

Table 2.1.3 in Chapter 2 provides the acceptable fuel characteristics for the IP1 fuel assemblies, array/class 14x14E, for storage in the HI-STORM 100 System.

2.II.1.1 Intact SNF, Damaged SNF, and Fuel Debris Specifications

Fuel debris from Indian Point Unit 1 is not authorized for storage in the IP1 MPC-32 or IP1 MPC-32F. Section 2.II.1.4 specifies the acceptable limits for IP1 fuel assemblies to be stored in the IP1 MPC-32 or MPC-32F.

In order to simplify the fuel selection and fuel placement in an MPC-32 or MPC-32F at IP1, all IP1 fuel assemblies are required to be stored in a damaged fuel container (DFC). Figure 2.II.1 describes

the Holtec designed damaged fuel container for IP1 fuel.

Since the MPC-32 and MPC-32F for IP1 have been shortened, fuel spacers will not be necessary inside the MPC.

2.II.1.2 Radiological Parameters for Design Basis SNF

Indian Point Unit 1 used Antimony-Beryllium as a secondary source during reactor operations. These secondary source devices were installed in the fuel assemblies and replaced a single fuel rod. Supplement 5.II discusses the acceptability of storing these devices.

2.II.1.3 Criticality Parameters for Design Basis SNF

The minimum ^{10}B areal density in the neutron absorber panels for each MPC model is shown in Table 2.1.15 in Chapter 2.

The criticality analyses for the IP1 specific MPC-32 and MPC-32F were performed without credit for soluble boron in the MPC water during wet loading and unloading operations. Therefore the required soluble boron level in the IP1 MPC-32 or MPC-32F water is 0 ppmb.

2.II.1.4 Summary of Authorized Contents

Table 2.II.1 specifies the limits for Indian Point Unit 1 fuel, array/class 14x14E, for storage in the IP1 MPC-32 and MPC-32F. The limits in these tables are derived from the safety analyses described in the following chapters and supplements of this FSAR. All IP1 fuel assemblies classified as intact or damaged must be stored in damaged fuel containers for storage in the IP1 MPC-32 and IP1 MPC-32F. Indian Point Unit 1 fuel debris is not permitted for storage in these MPCs.

2.II.2 HI-STORM 100 DESIGN CRITERIA

2.II.2.1 Handling Accident

A loaded HI-STORM 100S Version B overpack containing Indian Point Unit 1 fuel will be lifted so that the bottom of the cask is at a height less than the vertical lift limit (see Table 2.II.2) above the ground. The use of lifting devices designed in accordance with ANSI N14.6 having redundant drop protection features to lift the loaded overpack will eliminate the lift height limit. The lift height limit is dependent on the characteristics of the impacting surface, which are specified in Table 2.2.9 in Chapter 2. For site-specific conditions, which are not encompassed by Table 2.2.9, the licensee shall evaluate the site-specific conditions to ensure that the drop accident loads do not exceed 45 g's. Even if the site specific conditions are encompassed by Table 2.2.9, the licensee may choose to determine a site specific drop height which ensures that the drop accident loads do not exceed 45 g's. The methodology used in this alternative analysis shall be commensurate with the analyses in Appendix 3.A and shall be reviewed by the Certificate Holder.

HOLTEC INTERNATIONAL COPYRIGHTED MATERIAL

The loaded HI-TRAC 100D Version IP1, when lifted in the vertical position outside of the Part 50 facility shall be lifted with devices designed in accordance with ANSI N14.6 and having redundant drop protection features unless a site-specific analysis has been performed to determine a vertical lift height limit. Horizontal lifting of a loaded HI-TRAC 100D Version IP1 is not permitted.

2.II.3 SAFETY PROTECTION SYSTEMS

Same as in Section 2.3.

2.II.4 DECOMMISSIONING CONSIDERATIONS

Same as in Section 2.4.

2.II.5 REGULATORY COMPLIANCE

Same as in Section 2.5.

Table 2.II.1

LIMITS FOR MATERIAL TO BE STORED IN IP1 MPC-32 OR IP1 MPC-32F

PARAMETER	***VALUE***
Fuel Type	*Uranium oxide, PWR intact and damaged fuel assemblies meeting the limits in Table 2.1.3 for the array/class 14x14E*
Cladding Type	*Stainless Steel (SS)*
Maximum Initial Enrichment per Assembly	*As specified in Table 2.1.3 for the array/class 14x14E*
Post-irradiation Cooling Time and Average Burnup per Assembly	*≥ 30 years and* *≤ 30,000 MWD/MTU*
Decay Heat Per Fuel Storage Location	*≤ 250 Watts*
Other Limits	▪ *Quantity is limited to up to 32 PWR intact fuel assemblies and/or damaged fuel assemblies.* ▪ *Both intact and damaged fuel assemblies must be stored in a damaged fuel container.* ▪ *Fuel debris is not permitted for storage in IP1 MPC-32 or IP1 MPC-32F.* ▪ *Each fuel assembly may contain a single Antimony-Beryllium secondary source that replaces a fuel rod.*

Table 2.II.2

ADDITIONAL DESIGN INPUT DATA FOR ACCIDENT CONDITIONS

Item	***Condition***	***Value***
Vertical Lift Height Limit for a HI-STORM 100S Version B Overpack Loaded With Indian Point Unit 1 Fuel (in.)	*Accident*	*8*[†]
HI-TRAC 100D Version IP1 Transfer Cask Horizontal Lift Height Limit (in.)	*Accident*	*Not permitted*

[†] *For ISFSI and subgrade design parameter Sets A and B specified in Table 2.2.9 of Chapter 2. Users may also develop a site-specific lift height limit.*

NOTES:
1. ALL DIMENSIONS ARE IN INCHES AND ARE APPROXIMATE.
2. ALL MATERIAL IS STAINLESS STEEL.

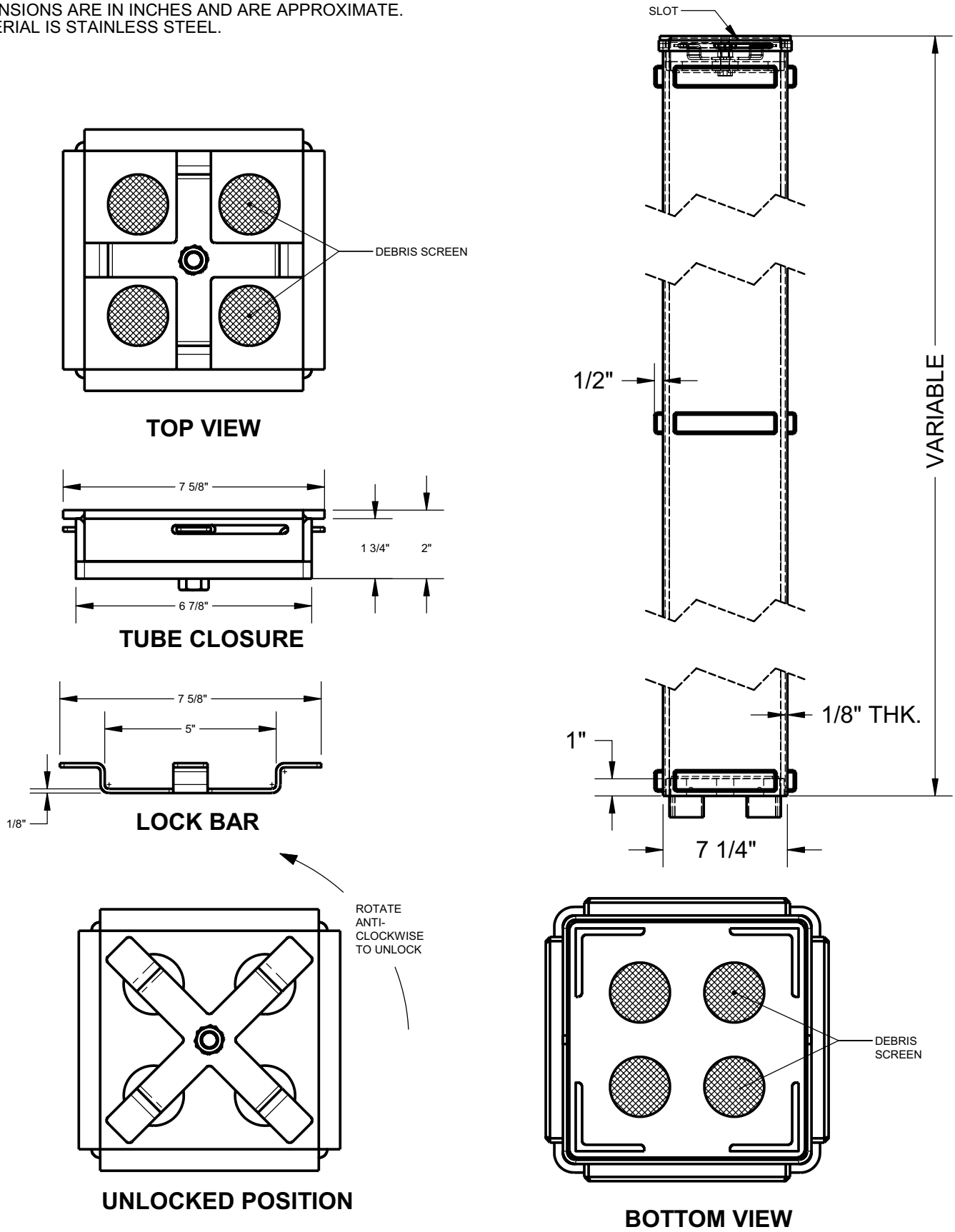

FIGURE 2.II.1; HOLTEC IP1 DAMAGED FUEL CONTAINER FOR PWR SNF IN MPC-32/32F

SUPPLEMENT 3.II

STRUCTURAL EVALUATION OF THE HI-STORM 100 SYSTEM FOR IP1

3.II.0 OVERVIEW

In this supplement, the structural adequacy of the HI-STORM 100 System for Indian Point Unit 1 (IP1) is evaluated pursuant to the guidelines of NUREG-1536.

The organization of technical information in this supplement mirrors the format and content of Chapter 3 except that it only contains material directly pertinent to the HI-STORM 100 System for IP1.

The HI-STORM 100 System for IP1 consists of shortened versions of the HI-STORM 100S Version B overpack (referred to as HI-STORM 100S-185), the MPC-32, and the HI-TRAC 100D transfer cask (referred to as HI-TRAC 100D Version IP1). The outer steel shell and lead thickness of the HI-TRAC 100D Version IP1 are also reduced to accommodate the crane capacity at IP1. Section 1.II.2 contains a complete description of the IP1 components. Alternatively, the HI-STORM 100S Version B(218) overpack (also referred to as HI-STORM 100S-218) may be substituted for the HI-STORM 100S-185 at IP1.

The applicable codes, standards, and practices governing the structural analysis of the HI-STORM 100 System for IP1 as well as the design criteria, are presented in Supplement 2.II. Throughout this supplement, the term "safety factor" is defined as the ratio of the allowable stress (load) or displacement for the applicable load combination to the maximum computed stress (load) or displacement. Where applicable, bounding safety factors are computed using values that bound the calculated results.

3.II.1 STRUCTURAL DESIGN

3.II.1.1 Discussion

A general discussion of the structural features of the MPC, the storage overpack, and the HI-TRAC transfer cask is provided in Section 3.1.1, and it applies equally to the HI-STORM 100 System for IP1. The drawings of the HI-STORM 100S Version B, MPC enclosure vessel, and MPC-32 provided in Section 1.5 contain notes regarding the IP1 specific variants. A separate drawing is provided in Section 1.5 for the HI-TRAC 100D Version IP1.

3.II.1.2 Design Criteria

Same as in Section 3.1.2, including all of its subsections, except as modified in Subsection 2.II.2.1 for handling accident loads.

HOLTEC INTERNATIONAL COPYRIGHTED MATERIAL

3.II.2 WEIGHTS AND CENTERS OF GRAVITY

Table 3.II.1 provides bounding weights for the individual HI-STORM 100 components for IP1 as well as the total system weights.

The locations of the calculated centers of gravity (CGs) are presented in Table 3.II.2. All centers of gravity are located on the cask centerline since the non-axisymmetric effects of the cask system plus contents are negligible.

3.II.3 MECHANICAL PROPERTIES OF MATERIALS

Same as in Section 3.3 (including all subsections and tables).

3.II.4 GENERAL STANDARDS FOR CASKS

3.II.4.1 Chemical and Galvanic Reactions

Same as in Subsection 3.4.1.

3.II.4.2 Positive Closure

There are no quick-connect/disconnect ports in the confinement boundary of the HI-STORM 100 System for IP1. The only access to the MPC is through the storage overpack lid, which weighs roughly 29,000 pounds (see Table 3.II.1). The lid is fastened to the storage overpack with large bolts. Inadvertent opening of the storage overpack is not feasible; opening a storage overpack requires mobilization of special tools and heavy-load lifting equipment.

3.II.4.3 Lifting Devices

3.II.4.3.1 HI-TRAC 100D Version IP1 Lifting Analysis

The lifting trunnions and the trunnion blocks for the HI-TRAC 100D Version IP1 are identical to the trunnions analyzed for the HI-TRAC 125 in Subsections 3.4.3.1 and 3.4.3.2. However, the outer shell geometry (outer diameter and thickness) is different. A calculation similar to what was previously performed for the HI-TRAC 100, and summarized in Subsection 3.4.3.4, provides justification that, despite the difference in local structure at the attachment points, the stresses in the body of the HI-TRAC 100D Version IP1 meet the stress allowables set forth in Subsection 3.1.2.2.

Figure 3.II.1 illustrates the differences in geometry, loads, and trunnion moment arms between the body of the HI-TRAC 125 and the body of the HI-TRAC 100D Version IP1. It is reasonable to assume that the level of stress in the HI-TRAC 100D Version IP1 body, in the immediate vicinity of the interface (Section X-X in Figure 3.II.1), is proportional to the applied force and the bending moment applied. In the figure, the subscripts 1 and 0 refer to HI-TRAC 100D

HOLTEC INTERNATIONAL COPYRIGHTED MATERIAL

Version IP1 and HI-TRAC 125 transfer casks, respectively. Figure 3.II.1 shows the location of the area centroid (with respect to the outer surface) and the loads and moment arms associated with each construction. Conservatively, neglecting all other interfaces between the top of the trunnion block and the top flange and between the sides of the trunnion block and the shells, equilibrium is maintained by developing a force and a moment in the section comprised of the two shell segments interfacing with the base of the trunnion block.

The most limiting stress state is in the outer shell at the trunnion block base interface. The stress level in the outer shell at Section X-X is proportional to P/A + Mc/I. Evaluating the stress for a unit width of section permits an estimate of the stress state in the HI-TRAC 100D Version IP1 outer shell if the corresponding stress state in the HI-TRAC 125 is known (the only changes are the applied load, the moment arm and the geometry). Using the geometry shown in Figure 3.II.1 gives the result as:

Stress (HI-TRAC 100D Version IP1 outer shell) = 1.337 x Stress (HI-TRAC 125 outer shell)

The tabular results from Subsection 3.4.3.3 can be adjusted accordingly and are reported below:

HI-TRAC 100D Version IP1 Near Trunnion (Region A and Region B)	
Item	***Safety Factor***
Membrane Stress	*2.01*
Membrane plus Bending Stress	*2.25*
Membrane Stress (3D)*	*1.32*

3.II.4.3.2 HI-STORM 100 Lifting Analyses

The HI-STORM 100S-185 is identical to the HI-STORM 100S Version B (218), except that its inside cavity length is shorter by approximately 33 inches and it is lighter when fully loaded. Therefore, the HI-STORM lifting analyses presented in Subsection 3.4.3.5 for the HI-STORM 100S Version B overpack conservatively bound the HI-STORM 100S-185.

3.II.4.3.3 MPC Lifting Analysis

The MPC-32 for IP1 is identical to the standard MPC-32, except that its inside cavity length is shorter by approximately 33 inches, and it is lighter when fully loaded. Therefore, the MPC lifting analyses presented in Subsection 3.4.3.6 bound the MPC-32 for IP1.

HOLTEC INTERNATIONAL COPYRIGHTED MATERIAL

3.II.4.3.4 Miscellaneous Lid Lifting Analyses

Same as in Subsection 3.4.3.7.

3.II.4.3.5 HI-TRAC Pool Lid Analysis

The pool lid for the HI-TRAC 100D Version IP1 is identical to the HI-TRAC 100D pool lid. Therefore, since the MPC-32 for IP1 weighs less than the typical MPC, the results of the pool lid analysis for the HI-TRAC 100D reported in Subsection 3.4.3.8 are bounding for the HI-TRAC 100D Version IP1.

3.II.4.3.6 HI-TRAC Bottom Flange Evaluation

The bottom flange design of the HI-TRAC 100D Version IP1 is identical to that of the HI-TRAC 100D. Therefore, the HI-TRAC 100D bottom flange evaluation presented in Subsection 3.4.3.10 bounds the HI-TRAC 100D Version IP1.

3.II.4.4 Heat

The thermal evaluation of the HI-STORM 100 System for IP1 is reported in Supplement 4.II.

3II.4.4.1 Summary of Pressures and Temperatures

The design pressures and design temperatures listed in Tables 2.2.1 and 2.2.3, respectively, are applicable to the HI-STORM 100 System for IP1.

3.II.4.4.2 Differential Thermal Expansion

Same as in Subsection 3.4.4.2 (including all subsections).

3.II.4.4.3 Stress Calculations

The HI-STORM 100 System for IP1 has many similarities with the generic HI-STORM 100 System analyzed in Chapter 3. Therefore, the stress calculations reported in Subsection 3.4.4.3 are not repeated here unless geometry or load changes warrant new analysis or discussion. For example, analysis of the HI-STORM lid under accident conditions (e.g., vertical end drop and tip-over) is not included in this supplement since neither the HI-STORM lid geometry nor the maximum loading is different for the HI-STORM 100S-185 at IP1. Unless a new analysis is presented in this subsection, the results in Subsection 3.4.4.3 for the MPC-32, HI-STORM 100S Version B, and the HI-TRAC 100D bound the IP1 specific variants.

HOLTEC INTERNATIONAL COPYRIGHTED MATERIAL

3.II.4.4.3.1 Structural Integrity of Damaged Fuel Container for IP1

The damaged fuel container (DFC) to be deployed in the HI-STORM 100 System at IP1, which is depicted in Figure 2.II.1, has been evaluated to demonstrate that the container is structurally adequate to support the mechanical loads postulated during normal lifting operations, while in long-term storage, and during a hypothetical end drop.

The structural load path is evaluated using a combination of basic strength of materials formulations and finite element analysis. The various structural components are modeled as axial or bending members and their stresses are computed. The load path includes components such as the container sleeve and collar, various structural welds, load tabs, closure components and lifting bolt. Axial plus bending stresses are computed, together with applicable bearing stresses and weld stresses. Comparisons are then made with the appropriate allowable strengths at temperature. The design temperature for lifting evaluations is set at 150°F (since the DFC is in the spent fuel pool). The design temperature for accident conditions is set at 300°F.

The upper closure assembly must meet the requirements set forth for special lifting devices used in nuclear applications [3.1.2]. The remaining components of the damaged fuel container are governed by the stress limits of the ASME Code Section III, Subsection NG [3.4.10] and Section III, Appendix F [3.4.3], as applicable.

The analysis demonstrates that the DFC is structurally adequate to support the mechanical loads postulated during normal lifting operations and during a hypothetical end drop. Moreover, since the HI-STAR design basis handling accident bounds the corresponding load for HI-STORM (60g vs. 45g), the DFC has the ability to be carried safely in both the HI-STAR and HI-STORM Systems.

3.II.4.4.3.2 Lead Slump in HI-TRAC 100D Version IP1

Horizontal lifting of the HI-TRAC 100D Version IP1 is not permitted. Therefore, a horizontal drop accident of the transfer cask, causing the lead shielding to slump between the inner and outer shell annulus, is not credible. Notwithstanding this handling restriction, the lead slump analysis performed in Subsection 3.4.4.3.3.2 for the HI-TRAC 125 is considered bounding for the HI-TRAC 100D Version IP1 because of the reduced lead thickness and the lower weight of the MPC-32 associated with HI-STORM 100 System at IP1.

3.II.4.5 Cold

Same as in Subsection 3.4.5.

HOLTEC INTERNATIONAL COPYRIGHTED MATERIAL

3.II.4.6 HI-STORM 100 Kinematic Stability under Flood Condition (Load Case A in Table 3.1.1)

The flood condition subjects the HI-STORM 100 System to external pressure, together with a horizontal load due to water velocity. Because the HI-STORM 100 storage overpack is equipped with ventilation openings, the hydrostatic pressure from flood submergence acts only on the MPC. As stated in Subsection 3.1.2.1.1.3, the design external pressure for the MPC bounds the hydrostatic pressure from flood submergence. Subsection 3.4.4.5.2 reports a positive safety factor against instability from external pressure in excess of that expected from a complete flood submergence.

The water velocity associated with flood produces a horizontal drag force, which may act to cause sliding or tip-over. In accordance with the provisions of ANSI/ANS 57.9, the acceptable upper bound flood velocity, V, must provide a minimum factor of safety of 1.1 against overturning and sliding. For the HI-STORM 100, the design basis flood velocity is set at 15 ft/sec. The following calculations conservatively assume that the flow velocity is uniform over the height of the storage overpack.

From Subsection 3.4.6, the safety factor against sliding is given by:

$$\beta_1 = \frac{F_f}{F} = \frac{\mu KW}{Cd\ A\ V^*}$$

where μ= 0.25, Cd = 0.5, K = 0.64, and V^* = 218.01 lb per sq. ft. The values of A and W for the HI-STORM 100S-185 overpack are:

A = height x diameter of HI-STORM 100S-185 = 170.34 ft^2

W = empty weight of HI-STORM 100S-185 w/ lid = 218,000 lb (from Table 3.II.1)

Therefore,

β_1 = 1.88 > 1.1 (required)

For determining the margin of safety against overturning, the cask is assumed to pivot about a fixed point located at the outer edge of the contact circle at the interface between the HI-STORM 100S-185 and the ISFSI. From Subsection 3.4.6, the safety factor against overturning is given by:

$$\beta_2 = \frac{F_T}{F} = \frac{KWD}{2H^* Cd\ A\ V^*}$$

where

D = diameter of HI-STORM 100S-185 = 132.5"

H^* = CG height of empty HI-STORM 100S-185 = 91.20" (from Table 3.II.2)

Therefore,

β_2 = 5.46 > 1.1 (required)

If the MPC-32 for IP1 is loaded inside a HI-STORM 100S Version B(218) overpack, instead of a HI-STORM 100S-185, then the safety factors against sliding and overturning calculated in Subsection 3.4.6 are bounding.

As explained in Subsection 3.4.6, the circumferential stress in the HI-STORM inner and outer shells, and the degree to which they ovalize, due to the flood load is bounded by the results of the seismic event analysis.

3.II.4.7 Seismic Event and Explosion

Since the HI-STORM 100S-185 has a lower of center of gravity than the HI-STORM overpacks analyzed in Chapter 3, while maintaining the same diameter at its base and cross-sectional properties as the HI-STORM 100S Version B, the seismic event and explosion analyses presented in Section 3.4.7 (including all subsections) are bounding for the HI-STORM 100S-185 at IP1, as well as for the HI-STORM 100S Version B(218) loaded with an MPC-32 for IP1.

3.II.4.8 Tornado Wind and Missile Impact (Load Case B in Table 3.1.1 and Load Case 04 in Table 3.1.5)

During a tornado event, the HI-STORM 100 System at IP1 is assumed to be subjected to a constant wind force. It is also subject to impacts by postulated missiles. The maximum wind speed is specified in Table 2.2.4 and the three missiles, designated as large, intermediate, and small, are described in Table 2.2.5.

The post impact response of the HI-STORM 100 System at IP1 is required to assess stability. Both the HI-STORM 100S-185 storage overpack and the HI-TRAC 100D Version IP1 transfer cask are assessed for missile penetration.

The results for the post-impact response of the HI-STORM 100S-185 overpack demonstrate that the combination of tornado missile plus either steady tornado wind or instantaneous tornado pressure drop causes a rotation of the overpack to a maximum angle of inclination less than 3 degrees from vertical. This is much less than the angle required to overturn the cask.

HOLTEC INTERNATIONAL COPYRIGHTED MATERIAL

The maximum force (not including the initial pulse due to missile impact) acting on the projected area of the storage overpack is computed to be:

$$F = 73{,}590 \text{ lb}$$

The instantaneous impulsive force due to the missile strike is not computed here; its effect is felt as an initial angular velocity imparted to the storage overpack at time equal to zero. The net resultant force due to the simultaneous pressure drop is not an all-around distributed loading that has a net resultant, but rather is more likely to be distributed only over 180 degrees (or less) of the storage overpack periphery. The circumferential stress and deformation field will be of the same order of magnitude as that induced by a seismic loading. Since the magnitude of the force F is less than the magnitude of the net seismically induced force considered in Subsection 3.4.7, the storage overpack global stress analysis performed in Subsection 3.4.7 remains governing.

If the MPC-32 for IP1 is loaded inside a HI-STORM 100S Version B(218) overpack, instead of a HI-STORM 100S-185, then the results from Subsection 3.4.8 for a freestanding HI-STORM 100 overpack are applicable.

3.II.4.8.1 <u>HI-STORM 100S-185 Storage Overpack</u>

Since the HI-STORM 100S-185 overpack is nothing more than a shortened version of the HI-STORM 100S Version B overpack, with an identical lid, the missile impact analyses performed in Subsection 3.4.8.1 are bounding for the HI-STORM 100S-185.

3.II.4.8.2 <u>HI-TRAC 100D Version IP1 Transfer Cask</u>

3.II.4.8.2.1 <u>Intermediate Missile Strike</u>

The HI-TRAC 100D Version IP1 is always held by the handling system in a vertical orientation while outside of the fuel building (see Subsection 2.II.2.1). Therefore, considerations of instability due to a tornado missile strike are not applicable. However, the structural implications of a missile strike require consideration.

Since the HI-TRAC 100D Version IP1 can only be handled in the vertical orientation, a direct missile strike on the pool lid is not credible. However, the potential for the 8" diameter missile to penetrate the lead backed outer shell of the HI-TRAC 100D Version IP1 (Load Case 04 in Table 3.1.5) is examined.

It is shown that there is no penetration consequence that would lead to a radiological release. The following paragraphs summarize the analysis results for the small and intermediate missiles.

a. The small missile will dent any surface it impacts, but no significant puncture force is generated.

b. *The following table summarizes the denting and penetration analysis performed for the intermediate missile. Denting connotes a local deformation mode encompassing material beyond the impacting missile envelope, while penetration connotes a plug type failure mechanism involving only the target material immediately under the impacting missile.*

Location	***Denting (in)***	***Thru-Thickness Penetration***
Outer Shell - lead backed	*0.498*	*No (< 0.75 in.)*

When the transfer cask is in a horizontal orientation, the MPC lid is potentially vulnerable to a direct missile strike through the center hole in the HI-TRAC top lid. Notwithstanding the vertical handling restriction, and assuming no protective plate is installed, the capacity of the MPC lid peripheral groove weld to resist an intermediate missile impact is analyzed for the HI-STORM 100 System at IP1. The calculated result is as follows:

Item	***Value (lb)***	***Capacity (lb)***	***Safety Factor = Capacity/Value***
MPC Lid Weld	*2,262,000*	*2,631,000*	*1.16*

The final calculation in this subsection is an evaluation of the circumferential stress and deformation consequences of the horizontal missile strike on the periphery of the HI-TRAC 100D Version IP1. It is assumed that the HI-TRAC is simply supported at its ends (while in transit) and is subject to a direct impact from the 8" diameter missile. To compute stresses, the peak impact force of 248,800 lb calculated in Subsection 3.4.8.2.1 for the HI-TRAC 100 is conservatively used here for analysis of the HI-TRAC 100D Version IP1. The reason that this is conservative is because the target stiffness used to determine the impact force in Subsection 3.4.8.2.1 is based on the HI-TRAC 100 shell geometry, which has a thicker outer shell and more lead between the steel shells. Consequently, since the impact force is greater for larger stiffness values, the force calculated for the HI-TRAC 100 is bounding for the HI-TRAC 100D Version IP1.

The only portions of the HI-TRAC cylindrical body that are assumed to resist the impact load are the inner and outer shells. The effect of the water jacket to aid in the dissipation of the impact force is conservatively neglected. Meanwhile, the lead is assumed only to act as a separator to maintain the spacing between the shells. The results from the lead slump analysis in Subsection 3.4.4.3.3.2 demonstrate that this assumption regarding the lead behavior is valid.

As in Subsection 3.4.7.1, classical formulas for the deformation of rings under specified surface loadings are used to estimate circumferential behavior of the HI-TRAC shells under impact. Specifically, the solution for a point-supported ring subject to a uniform body load is implemented. The effective width of ring that balances the impact load is conservatively set as the diameter of the impacting missile (8") plus the effective length of the "bending boundary layer".

Consequently, the maximum circumferential stress due to the bending moment in the ring, away from the impact location, is:

19,780 psi

At the same location, the tangential force in the ring adds a primary stress component, which equals (area is based on the effective width of the ring):

2,314 psi

Therefore, the safety factor against excessive stress in the ring section that is assumed to resist the impact is:

SF = 39,750 psi/(2,314 psi + 19,780 psi) = 1.80

The allowable primary membrane stress intensity for this safety factor calculation is obtained from Table 3.1.12 for a Level D event at 350ºF. Since the circumferential stress in the ring remains in the elastic range, it is concluded that the MPC remains readily retrievable after the impact since there is no permanent ovalization of the cavity after the event. As noted previously, the presence of the water jacket adds an additional structural barrier that has been conservatively neglected in this analysis.

3.II.4.8.2.2 <u>Large Missile Strike</u>

The effects of a large tornado missile strike on the side (water jacket outer enclosure) of a loaded HI-TRAC 100 transfer cask have been evaluated, using the transient finite element code LSDYNA3D, in Subsection 3.4.8.2.2. The results show that:

a. *The retrievability of the MPC in the wake of a large tornado missile strike is not adversely affected since the inner shell does not experience <u>any</u> plastic deformation.*

b. *The maximum ~~primary~~ stress intensity* anywhere in the water jacket, including the impacted area, is 33,383 psi*~~, away from the impact interface on the HI-TRAC water jacket~~*, which *is below ~~5~~60% of the applicable ASME Code Level D allowable limit for NF, Class 3 structures.*

~~*Based on the large margins of safety associated with the above results, and the small differences in the cylindrical wall assembly (in the radial direction) between the HI-TRAC 100 and the HI-TRAC 100D Version IP1, it is concluded that a large missile strike on the HI-TRAC 100D Version IP1 transfer cask will not prevent ready retrievability of the MPC or cause primary stress levels (away from the point of impact) to exceed the applicable ASME Code limits. The fact that the HI-TRAC 100D Version IP1 is approximately 33 inches shorter than the HI-TRAC 100, which tends to make for a stiffer structure, further validates this conclusion.*~~

With respect to the HI-TRAC 100D Version IP1, it has the same water jacket shell thickness as the HI-TRAC 100 and a slightly smaller water jacket outside diameter. The only significant difference in the water jacket geometry between the HI-TRAC 100 and the HI-TRAC 100D Version IP1 is the number of radial ribs that support the water jacket shell; the HI-TRAC 100 has ten radial ribs, whereas the HI-TRAC 100D Version IP1 has only 8. In order to evaluate this difference, the finite element results for the HI-TRAC 100 are scaled conservatively based on the following factor:

$$\alpha = \left(\frac{L_1}{L_2}\right)^2$$

where L_1 and L_2 are the unsupported length of the water jacket shell in the circumferential direction for the HI-TRAC 100D Version IP1 and the HI-TRAC 100, respectively. The above factor is based on the classical solution for a simply supported beam under uniform load, and it has the following value (conservatively neglecting the slight difference in water jacket OD):

$$\alpha = \left(\frac{10}{8}\right)^2 = 1.5625$$

Thus, for the HI-TRAC 100D Version IP1, the maximum stress intensity in the water jacket due to a large missile impact is estimated as follows:

$$\sigma = 1.5625 \times 33{,}383\,psi = 52{,}161\,psi$$

The resulting stress intensity is less than the applicable local membrane plus primary bending stress intensity limit under Level D conditions per FSAR Table 3.1.17 (Load Case I.D. O4). Thus, the water jacket on the HI-TRAC 100D Version IP1 is not expected to rupture as a result of the design basis large missile impact. Nonetheless, for defense in depth, the shielding analysis conservatively assumes a complete loss of water from the water jacket following a large tornado missile strike. Finally, since the HI-TRAC 100D Version IP1 has the same inner shell diameter and thickness as the HI-TRAC 100, while being shorter in length, the finite element results for the HI-TRAC 100 inner shell are considered valid for the HI-TRAC 100D Version IP1.

HOLTEC INTERNATIONAL COPYRIGHTED MATERIAL

3.II.4.9 HI-TRAC Drop Events

As discussed in Subsection 2.II.2.1, the HI-TRAC 100D Version IP1 shall only be lifted in the vertical orientation using devices designed in accordance with ANSI N14.6 and having redundant drop protection features unless a site-specific analysis has been performed to determine a vertical lift height limit. Horizontal lifting of a loaded HI-TRAC 100D Version IP1 is not permitted. Thus, an accidental drop of the HI-TRAC 100D Version IP1 in any orientation is not ~~credible~~analyzed in this FSAR.

3.II.4.10 HI-STORM 100 Non-Mechanistic Tip-over and Vertical Drop Event (Load Cases 02.a and 02.c in Table 3.1.5)

Pursuant to the provision in NUREG-1536, a non-mechanistic tip-over of a loaded HI-STORM 100 System at IP1 on to the ISFSI pad is considered in this supplement. Calculations are also performed to determine the maximum vertical carry height limit such that the deceleration sustained by a vertical free fall of a loaded HI-STORM 100S-185 onto the ISFSI pad is less than design basis deceleration limit specified in Table 3.1.2.

The tip-over analysis performed in Appendix 3.A is based on the HI-STORM 100 geometry and a bounding weight. The fact that the HI-STORM 100S-185 is shorter and has a lower center of gravity suggests that the impact kinetic energy is reduced so that the target would absorb the energy with a lower maximum deceleration. However, since the actual weight of a HI-STORM 100S-185 is less than that of a HI-STORM 100 by a significant amount, the predicted maximum rigid body deceleration would tend to increase slightly. Since there are two competing mechanisms at work, it is not a foregone conclusion that the maximum rigid body deceleration level is, in fact, reduced if a HI-STORM 100S-185 suffers a non-mechanistic tip-over onto the identical target as the HI-STORM 100. In what follows, we present a summary of the analysis undertaken to demonstrate conclusively that the result for maximum deceleration level in the HI-STORM 100 tip-over event does bound the corresponding value for the HI-STORM 100S-185, as well as for the HI-STORM 100S Version B(218) loaded with IP1 fuel, and therefore we need only perform a detailed dynamic finite element analysis for the HI-STORM 100. The analysis employs the methodology previously established in Subsection 3.4.10 for analyzing the HI-STORM 100S overpack.

Appendix 3.A presents a result for the angular velocity of the cylindrical body representing a HI-STORM 100 just prior to impact with the defined target. The result is expressed in Subsection 3.A.6 in terms of the cask geometry, and the ratio of the mass divided by the mass moment of inertia about the corner point that serves as the rotation origin. Since the mass moment of inertia is also linearly related to the mass, the angular velocity at the instant just prior to target contact is independent of the cask mass. Subsequent to target impact, we investigate post-impact response by considering the cask as a cylinder rotating into a target that provides a resistance force that varies linearly with distance from the rotation point. We measure "time" as starting at

HOLTEC INTERNATIONAL COPYRIGHTED MATERIAL

the instant of impact, and develop a one-degree-of freedom equation for the post-impact response (for the rotation angle into the target) as:

$$\ddot{\theta} + \omega^2\theta = 0$$

where

$$\omega^2 = \frac{kL^3}{3I_A}$$

The initial conditions at time zero are: the initial angle is zero and the initial angular velocity is equal to the rigid body angular velocity acquired by the tip-over from the center-of-gravity over corner position. In the above relation, L is the length of the overpack, I is the mass moment of inertia defined in Appendix 3.A, and k is a "spring constant" associated with the target resistance. If we solve for the maximum angular acceleration subsequent to time zero, we obtain the result in terms of the initial angular velocity as:

$$\ddot{\theta}_{max} = \omega\dot{\theta}_0$$

If we form the maximum linear acceleration at the top of the overpack lid, we can finally relate the decelerations of the HI-STORM 100 and the HI-STORM 100S-185 solely in terms of their geometry properties and their mass ratio. The value of "k", the target spring rate is the same for both overpacks so it does not appear in the relationship between the two decelerations. After substituting the appropriate geometry and calculated masses, we determine that the ratio of maximum rigid body decelerations at the top surface of the lids is:

$$A_{HI\text{-}STORM\ 100S\text{-}185}/A_{HI\text{-}STORM\ 100} = 0.844$$

If the MPC-32 for IP1 is loaded inside a HI-STORM 100S Version B(218) overpack, instead of a HI-STORM 100S-185, then the ratio of maximum rigid body decelerations at the top surface of the lids is:

$$A_{HI\text{-}STORM\ 100S\text{-}218}/A_{HI\text{-}STORM\ 100} = 0.985$$

Therefore, as postulated, there is no need to perform a separate DYNA3D analysis for the non-mechanistic tip-over of a HI-STORM 100S-185 overpack or a HI-STORM 100S Version B(218) overpack loaded with IP1 fuel.

Moreover, according to Appendix 3.A, analysis of a single mass impacting a spring with a given initial velocity shows that the maximum deceleration "a_M" of the mass is related to the dropped weight "w" and the drop height "h" as follows:

HOLTEC INTERNATIONAL COPYRIGHTED MATERIAL

$$a_M \sim \frac{\sqrt{h}}{\sqrt{w}}$$

In other words, as the dropped weight decreases, the maximum deceleration of the mass increases for a fixed drop height. Since the HI-STORM 100 System at IP1 weighs considerably less than the HI-STORM 100 System analyzed in Appendix 3.A, the vertical carry height limit for HI-STORM 100S-185 overpack must be reduced to satisfy the design basis deceleration limit. From the above relationship, the maximum vertical carry height limit for the HI-STORM 100S-185 is determined as:

$$h_{185} = \frac{w_{185}}{w_{100}} h_{100}$$

where w_{185} is the lower bound weight of a loaded HI-STORM 100S-185 overpack, w_{100} is the weight of a loaded HI-STORM 100 overpack as analyzed in Appendix 3.A, and h_{100} is the vertical drop height of the HI-STORM 100 from Appendix 3.A. The above equation yields the following result:

$$h_{185} = 8.03''$$

Therefore, by restricting the vertical carry height for the HI-STORM 100 System at IP1 to 8" or less, the maximum cask decelerations for the HI-STORM 100S-185 are bounded by the rigid body decelerations calculated in Appendix 3.A for the HI-STORM 100 overpack. Since the HI-STORM 100S Version B(218) weighs more than the HI-STORM 100S-185, the 8" vertical carry height limit is also bounding for the alternate system configuration, wherein the MPC-32 for IP1 is loaded inside a HI-STORM 100S Version B(218) overpack. The preceding result is valid for all surfaces along the travel path to the ISFSI pad that meet either the Set "A" or Set "B" design parameters as defined in Table 2.2.9. As discussed in Subsection 2.II.2.1, the licensee may choose to perform a site-specific analysis to establish a new vertical carry height limit based on their site-specific conditions, even if their ISFSI pad design complies with the general design parameters of Table 2.2.9. The site-specific drop analysis, however, must use the same methodology as employed in Appendix 3.A.

Subsection 3.4.10 provides the results of a simple elastic strength of materials calculation, which demonstrates that the cylindrical storage overpack will not permanently deform to the extent that the MPC cannot be removed by normal means after a tip-over event. Those results are bounding for the HI-STORM 100 System at IP1 since they are calculated using upper bound impact decelerations and lower bound section properties for the shell geometry.

3.II.4.11 Storage Overpack and HI-TRAC Transfer Cask Service Life

Same as in Subsection 3.4.11 (including all subsections).

3.II.4.12 MPC Service Life

Same as in Subsection 3.4.12.

3.II.4.13 Design and Service Life

Same as in Subsection 3.4.13.

3.II.5 FUEL RODS

Same as in Section 3.5.

3.II.6 SUPPLEMENTAL DATA

3.II.6.1 Additional Codes and Standards Referenced in HI-STORM 100 System Design and Fabrication

Same as in Subsection 3.6.1.

3.II.6.2 Computer Programs

ANSYS 9.0, which is a public domain finite element code, has been utilized to perform structural analyses documented in this supplement.

3.II.6.3 Appendices Included in Supplement 3.II

None.

3.II.6.4 Calculation Packages

A calculation package containing the structural calculations supporting Supplement 3.II has been prepared, reviewed, and archived according to Holtec International's quality assurance program (see Chapter 13).

3.II.7 COMPLIANCE WITH NUREG-1536

The material in this supplement for the HI-STORM 100 System at IP1 provides the same information as previously provided for the HI-STORM 100 Systems in Chapter 3. Therefore, to the extent applicable, the information provided is in compliance with NUREG-1536.

3.II.8 REFERENCES

Same as in Section 3.8.

TABLE 3.II.1
WEIGHT DATA FOR IP1 HI-STORM 100 SYSTEM

Item	***Bounding Weight (lb)***
MPC-32	
• *Without SNF*	*29,000*
• *Fully loaded with SNF and Damaged Fuel Containers*	*58,000*
HI-STORM 100S-185 Overpack	
• *Overpack top lid*	*29,000*
• *Overpack w/ lid (empty)*	*218,000*
• *Overpack w/ fully loaded MPC-32*	*276,000*
HI-TRAC 100D Version IP1 Transfer Cask	
• *Top lid*	*1,250*
• *Pool lid*	*8,150*
• *HI-TRAC w/ Top Lid and Pool Lid (water jacket filled)*	*80,000*
• *HI-TRAC w/ Top Lid, Pool Lid, and fully loaded MPC-32 (water jacket filled)*	*138,000*
• *Lifted Weight Above Pool with HI-TRAC 100D Version IP1*	*150,000*

TABLE 3.II.2
CENTERS OF GRAVITY OF HI-STORM SYSTEM CONFIGURATIONS FOR IP1

Component	***Height of CG Above Datum (in)***
MPC-32 (empty)	*94.40*
HI-STORM 100S-185 Overpack (empty)	*91.20*
HI-STORM 100S-185 Overpack w/ fully loaded MPC-32	*91.22*
HI-TRAC 100D Version IP1 Transfer Cask w/ Top Lid and Pool Lid (water jacket filled)	*73.43*
HI-TRAC 100D Version IP1 Transfer Cask w/ Top Lid, Pool Lid, and fully loaded MPC-32 (water jacket filled)	*79.27*

Notes:

1. *The datum used for calculations involving the HI-STORM is the bottom of the overpack baseplate. The datum used for calculations involving the HI-TRAC is the bottom of the pool lid.*

2. *The datum used for calculations involving only the MPC is the bottom of the MPC baseplate.*

3. *The CG height of the HI-STORM overpack is calculated based on standard density concrete (i.e., 166 pcf dry) in the radial cavity. At higher densities, the CG height is slightly lower, which makes the HI-STORM overpack less prone to tipping.*

HOLTEC INTERNATIONAL COPYRIGHTED MATERIAL

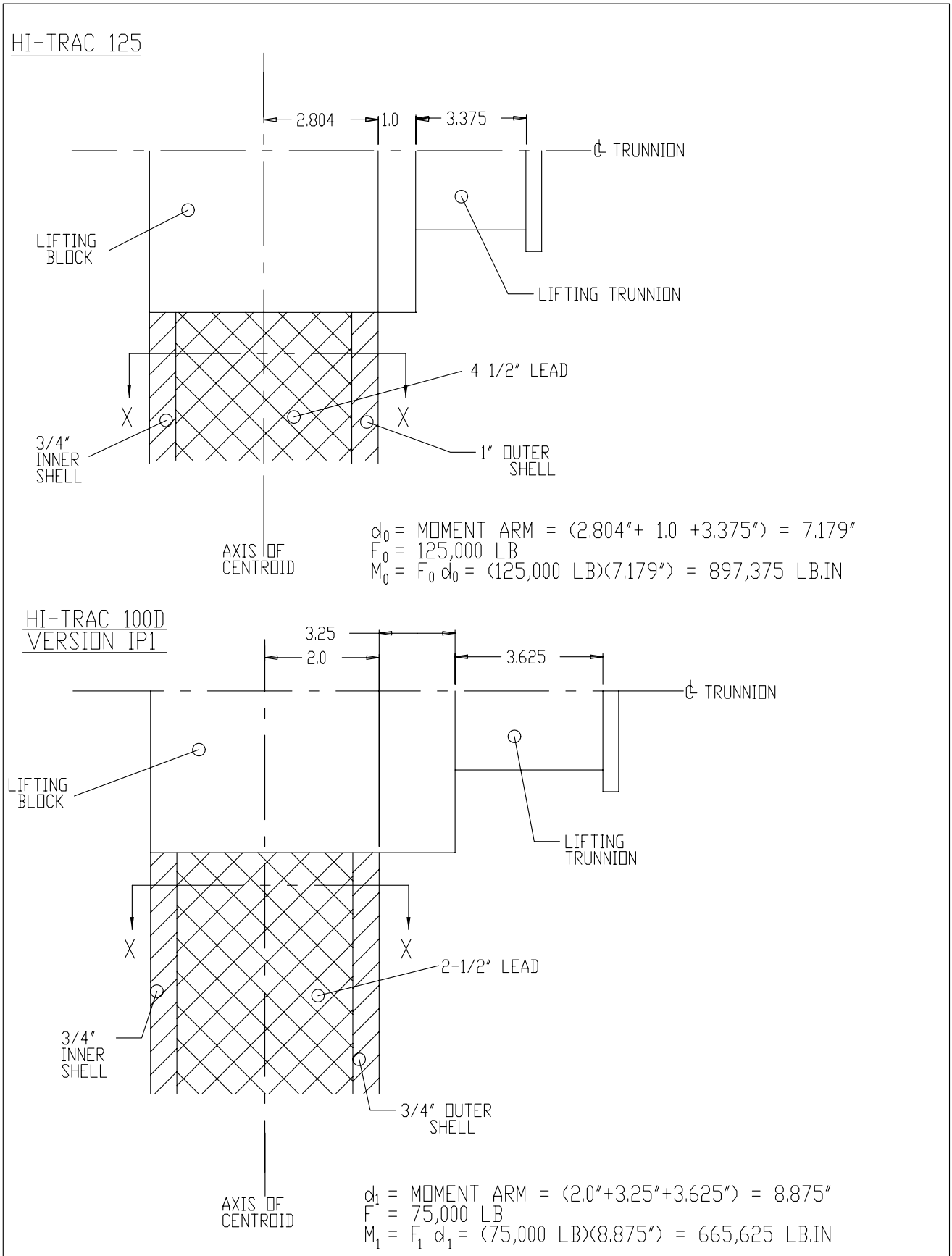

FIGURE 3.II.1; COMPARISON OF HI-TRAC 125 AND HI-TRAC 100D VERSION IP1 LIFTING TRUNNION CONNECTION

SUPPLEMENT 4.II

THERMAL EVALUATION OF HI-STORM 100 SYSTEM FOR IP1

4.II.1 INTRODUCTION

The HI-STORM 100S-185 is a shorter version of the generic HI-STORM 100S Version B overpack specifically designed to store Indian Point 1 (IP1) spent nuclear fuel assemblies. A shorter version of MPC-32 (MPC-32-IP1) is designed for the shorter IP1 fuel assemblies and a shorter version of HI-TRAC 100D (HI-TRAC 100D Version IP1) is designed for short-term transfer operations. All the fuel assemblies will be stored in Damaged Fuel Containers in the MPC-32-IP1. The MPC-32-IP1 may also be stored in the generic HI-STORM 100S Version B overpack. In this supplement, compliance of the HI-STORM 100S-185, MPC-32-IP1 and HI-TRAC 100D Version IP1 systems to 10CFR72 and ISG-11, Rev. 3 thermal requirements are evaluated for storage. The analysis considers passive rejection of decay heat from the spent nuclear fuel. The IP1 fuel storage system is evaluated for normal storage, short-term transfer and accident scenarios defined in the principal design criteria in Chapter 2. The regulatory requirements and acceptance criteria for these evaluations are listed in Section 2.2 and 4.0.

4.II.2 THERMAL PROPERTIES OF MATERIALS

The materials of construction of the HI-STORM 100S-185 system, HI-TRAC 100D Version IP1 and MPC-32-IP1 are the same as those for the generic HI-STORM 100 System, HI-TRAC 100D and MPC-32. The thermophysical data compiled in Section 4.2 of the FSAR provides the required materials information for all components of the system.

4.II.3 TECHNICAL SPECIFICATIONS OF COMPONENTS

The HI-STORM 100S-185 system materials and components to be maintained within safe operating limits are listed in Section 4.3. The temperature limits specified in Section 2.2 of the FSAR are adopted for this evaluation.

4.II.4 NORMAL STORAGE THERMAL EVALUATION

The HI-STORM 100S-185 cask features an all-welded multi-purpose canister (MPC-32-IP1) containing spent nuclear fuel emplaced in a steel-concrete overpack. From a thermal standpoint the IP1 specific cask components are identical to their generic counterparts except that the height of the HI-STORM 100S-185, MPC-32-IP1 and HI-TRAC 100D Version IP1 are shorter to be compatible with the short-length IP1 fuel. The thermal payload of the MPC-32-IP1 is given in Table 4.II.1.

HOLTEC INTERNATIONAL COPYRIGHTED MATERIAL

4.II.4.1 Thermal Model

Thermal modeling of the HI-STORM 100S-185 and the HI-TRAC 100D Version IP1 adopts the same methodologies used for the evaluation of the generic HI-STORM 100 System presented in Section 4.4 of the FSAR and the HI-TRAC 100D thermal evaluation presented in Section 4.5 of the FSAR. Two-dimensional axisymmetric Computational Fluid Dynamics (CFD) models of the IP1 fuel storage system are used in these evaluations. For a conservative portrayal of cask system temperatures, the thermal evaluation incorporates the following assumptions:

1. *No credit is taken for motion of helium in the MPC fuel storage cells.*

2. *The decay heat load used in this thermal evaluation is 8 kW. The IP1 cask heat load will be less than 5 kW.*

3. *The most severe levels of environmental factors for long-term normal storage, which are an ambient temperature of 80°F and 10CFR71 insolation levels, were coincidentally imposed on the system.*

4. *No credit was considered for contact between fuel assemblies and the MPC basket wall or between the MPC basket and the basket supports. The fuel assemblies and MPC basket were conservatively considered to be in concentric alignment.*

5. *Axial heat transfer through fuel pellets is ignored.*

6. *Heat dissipation by fuel assembly grid spacers and top & bottom fittings is ignored.*

7. *Insolation heating assumed with a bounding absorbtivity (=1.0).*

8. *A margin between the computed peak cladding temperature and 400°C limit is provided.*

9. *Conservative values of the inlet and outlet debris screen flow resistances were used in the analyses.*

10. *Conservatively, the IP1 fuel rod fill gas amount is assumed to be the same as the B&W 15x15 PWR fuel assembly. This assumption is very conservative since the IP1 fuel assemblies are much shorter and lighter than this fuel assembly.*

Thermal analysis results are provided in the next sections.

4.II.4.2 Maximum Temperatures

Steady-state thermal analysis of HI-STORM 100S-185 containing an MPC-32-IP1 is performed

HOLTEC INTERNATIONAL COPYRIGHTED MATERIAL

for normal conditions of long-term storage (normal ambient temperature of 80°F, maximum insolation and quiescent air). Table 4.II.2 presents the results of the analysis. All MPC and HI-STORM component temperatures are lower than the allowable limits presented in Section 2.2. Based on the results in Table 4.II.2 and those presented in Section 4.4, the following conclusions can be made:

a) Fuel temperatures are bounded by generic HI-STORM.
b) Confinement boundary temperatures are bounded by generic HI-STORM.
c) Surface temperatures are bounded by generic HI-STORM.
d) MPC internal pressure is bounded by generic HI-STORM.

As the HI-STORM 100S-185 temperatures and pressure are bounded by the generic HI-STORM 100 System evaluation and the generic HI-STORM 100 System complies with 10CFR Part 72 and ISG 11, Rev. 3 requirements (see Section 4.4), it can be concluded that the HI-STORM 100S-185 system is in compliance with the 10CFR Part 72 and ISG 11, Rev. 3 requirements for normal storage.

Placement of the MPC-32-IP1 in a generic HI-STORM 100 overpack is bounded by the evaluation presented above, since the generic overpack has a larger height. This will allow for more efficient heat transfer from the top of the MPC-32-IP1 due to the larger airflow area between the MPC lid and the overpack lid, increased air flow due to an increase in the chimney height and a larger heat transfer area on the overpack surface.

4.II.4.3 Minimum Temperatures

As specified in 10CFR72, the minimum ambient temperature conditions for the HI-STORM 100 and HI-TRAC 100D System are -40°F and 0°F, respectively. The HI-STORM 100 System and HI-TRAC 100D System design does not have any minimum decay heat load restrictions for transport. Therefore, under bounding cold conditions (zero decay heat and no insolation), the cask components temperatures will approach ambient conditions. All HI-STORM 100 System and HI-TRAC 100D System materials of construction satisfactorily perform their intended function at these cold temperatures. Evaluations in Chapter 3 demonstrate the acceptable structural performance of the overpack and MPC steel materials at low temperature. Shielding and criticality functions of the cask materials are unaffected by cold.

4.II.4.4 Maximum Internal Pressures

The IP1 multi-purpose canister is pressurized with helium prior to sealing the lid ports. In Table 4.II.3 the initial backfill pressures are listed. In response to higher than ambient storage temperatures the helium pressure rises above the initial backfill pressures. For conservatism the maximum normal operating pressure (MNOP) is computed assuming 100% fuel rods rupture and the MPC-32-IP1 is assumed to be backfilled at the maximum backfill pressure (See Table

HOLTEC INTERNATIONAL COPYRIGHTED MATERIAL

4.II.3). The MNOP for normal storage condition is provided in Table 4.II.2 and is less than the allowable limit.

4.II.4.5 Maximum Thermal Stresses

Thermal expansion induced mechanical stresses are evaluated, using bounding temperature distributions, in Chapter 4.

4.II.5 THERMAL EVALUATION OF SHORT TERM OPERATIONS

The heat load in the MPC-32-IP1 to be transported in the HI-TRAC 100D Version IP1 is much lower (8kW) as compared to that allowed for the generic HI-TRAC 100D. The short-term evaluations presented in Section 4.5 bound short-term operations in a HI-TRAC 100D Version IP1 overpack.

4.II.6 THERMAL EVALUATION OF OFF-NORMAL AND ACCIDENT CONDITIONS

4.II.6.1 Off-Normal Conditions

(a) Elevated Ambient Air Temperature

The off-normal ambient condition is defined in Chapter 2 as an ambient temperature of 100°F. This is 20°F higher than the normal condition ambient temperature of 80°F. This condition is conservatively evaluated by adding 20°F to the calculated normal condition fuel cladding and component temperatures. Results for this off-normal condition are presented in Table 4.II.4. The results are confirmed to be less than short-term temperature limits for fuel cladding, concrete, and ASME Code materials.

(b) Partial Blockage of Air Inlets

Since the MPC-32-IP1 and HI-STORM 100S-185 component temperatures are all lower than those for the generic HI-STORM system, the effect of 50% inlet ducts blockage discussed in Chapter 11 for the generic HI-STORM remain bounding.

HOLTEC INTERNATIONAL COPYRIGHTED MATERIAL

4.II.6.2 Accident Conditions

(a) Fire

The fire accident is defined in Table 2.0.2 as a 1475°F fire lasting 217 seconds. This is the same intensity and duration as the fire accident discussed in Chapter 11 of this FSAR for the generic HI-STORM 100 System. The existing fire evaluation therein bounds the HI-STORM 100S-185 fire event, for the following reasons:

Observation	***Basis***
Fire heat input to HI-STORM 100S-185 overpack is bounded by the generic HI-STORM 100 System	*Exposed area of overpack is bounded by larger generic design*
Start of fire conditions are bounded by generic HI-STORM 100 System.	*See Section 4.II.4.2*
Rate of MPC heatup is bounded by generic HI-STORM 100 System.	*Heat load in the MPC-IP1 is much lower than that permitted in the generic HI-STORM 100 System. Moreover, the reduction in the permitted heat load in the MPC-IP1 is much greater than the reduction in the thermal inertia of the HI-STORM 100S-185 cask as compared to the generic HI-STORM 100 system (about 30%).*

(b) Burial Under Debris

The burial under debris accident is defined in Table 2.0.2. The generic burial under debris described in Chapter 11 bounds the HI-STORM 100S-185 burial under debris event because the permissible heat load in the MPC-32-IP1 is much lower than the generic MPC-32 placed in a HI-STORM 100 System. Moreover, the reduction in the permitted heat load in the MPC-IP1 is much greater than the reduction in the thermal inertia of the HI-STORM 100S-185 cask as compared to the generic HI-STORM 100 system (about 30%).

(c) 100% Blockage of Air Ducts

The 100% air ducts blockage accident is defined in Table 2.0.2 as the blockage of 100% of the air inlet duct flow area. The initial condition for this transient thermal evaluation is the long-tem normal storage condition results. As the normal storage results for HI-STORM 100S-185

HOLTEC INTERNATIONAL COPYRIGHTED MATERIAL

temperatures and pressure are bounded by the generic HI-STORM 100 System results and the heat load in the generic HI-STORM 100 System is higher, the transient evaluation discussed in Chapter 11 for the generic HI-STORM 100 system remain bounding.

(d) Extreme Environmental Temperature

The extreme environmental temperature accident condition is defined in Table 2.0.2 as an ambient temperature of 125°F. This is 45°F higher than the normal condition ambient temperature of 80°F. This condition is conservatively evaluated by adding 45°F to the calculated normal condition fuel cladding and component temperatures. Results for this off-normal condition are presented in Table 4.II.5. The results are confirmed to be less than accident temperature limits for fuel cladding, concrete, and ASME Code materials.

4.II.7 REGULATORY COMPLIANCE

As required by ISG-11, the fuel cladding temperature at the beginning of dry cask storage is maintained below the anticipated damage-threshold temperatures for normal conditions for the licensed life of the HI-STORM System.

As required by NUREG-1536 (4.0,IV,3), the maximum internal pressure of the cask remains within its design pressure for normal, off-normal, and accident conditions. Design pressures are summarized in Table 2.2.1.

As required by NUREG-1536 (4.0,IV,4), all cask materials and fuel cladding are maintained within their temperature limits for normal, off-normal and accident conditions. Material temperature limits are summarized in Tables 2.2.3.

As required by NUREG-1536 (4.0,IV,5), the cask system ensures a very low probability of cladding breach during long-term storage. For long-term normal conditions, the maximum CSF cladding temperature is below the ISG-11 limit of 400 °C (752°F).

As required by NUREG-1536 (4.0,IV,7), the cask system is passively cooled. All heat rejection mechanisms described in this supplement, including conduction, natural convection, and thermal radiation, are passive.

As required by NUREG-1536 (4.0,IV,8), the thermal performance of the cask is within the allowable design criteria specified in Chapter 2 for normal, off-normal and accident conditions. All thermal results are within the allowable limits for all conditions of storage.

HOLTEC INTERNATIONAL COPYRIGHTED MATERIAL

Table 4.II.1: MPC-32-IP1 Thermal Payload

Total Decay Heat	*8 kW*

Table 4.II.2: Bounding HI-STORM 100S-185 System Long-Term Normal Storage Maximum Temperatures and Pressure

Component	***Temperature (^oF)***
Fuel Cladding	*498*
Fuel Basket	*492*
Fuel Basket Periphery	*247*
MPC Shell	*210*
MPC Lid	*213*
Lid Concrete	*182*
Average Air Outlet Temperature	*96*
Pressure (psig)	
MPC	*83*

Table 4.II.3: Helium Backfill Pressures

Minimum Pressure	*22.0 psig @ 70^oF*
Maximum Pressure	*33.3 psig @ 70^oF*

HOLTEC INTERNATIONAL COPYRIGHTED MATERIAL

Table 4.II.4: Results for Elevated Ambient Air Temperature Off-Normal Event

Component	***Temperature (^{0}F)***
Fuel Cladding	*518*
Fuel Basket	*512*
Fuel Basket Periphery	*267*
MPC Shell	*230*
MPC Lid	*233*
Lid Concrete	*202*
Average Air Outlet Temperature	*116*
Pressure (psig)	
MPC	*86*

Table 4.II.5: Results for Extreme Environmental Temperature Accident

Component	***Temperature (^{0}F)***
Fuel Cladding	*543*
Fuel Basket	*537*
Fuel Basket Periphery	*292*
MPC Shell	*255*
MPC Lid	*258*
Lid Concrete	*227*
Average Air Outlet Temperature	*141*
Pressure (psig)	
MPC	*89*

HOLTEC INTERNATIONAL COPYRIGHTED MATERIAL

5.2 SOURCE SPECIFICATION

The neutron and gamma source terms, decay heat values, and quantities of radionuclides available for release were calculated with the SAS2H and ORIGEN-S modules of the SCALE 4.3 system [5.1.2, 5.1.3]. SAS2H has been extensively compared to experimental isotopic validations and decay heat measurements. References [5.2.8] through [5.2.12] and [5.2.15] present isotopic comparisons for PWR and BWR fuels for burnups ranging to 47 GWD/MTU and reference [5.2.13] presents results for BWR measurements to a burnup of 57 GWD/MTU. A comparison of calculated and measured decays heats is presented in reference [5.2.14]. All of these studies indicate good agreement between SAS2H and measured data. Additional comparisons of calculated values and measured data are being performed by various institutions for high burnup PWR and BWR fuel. These new results, when published, are expected to further confirm the validity of SAS2H for the analysis of PWR and BWR fuel.

Sample input files for SAS2H and ORIGEN-S are provided in Appendices 5.A and 5.B, respectively. The gamma source term is actually comprised of three distinct sources. The first is a gamma source term from the active fuel region due to decay of fission products. The second source term is from ^{60}Co activity of the steel structural material in the fuel element above and below the active fuel region. The third source is from (n,γ) reactions described below.

A description of the design basis zircaloy clad fuel for the source term calculations is provided in Table 5.2.1. The PWR fuel assembly described is the assembly that produces the highest neutron and gamma sources and the highest decay heat load for a given burnup and cooling time from the following fuel assembly classes listed in Table 2.1.1: B&W 15x15, B&W 17x17, CE 14x14, CE 16x16, WE 14x14, WE 15x15, WE 17x17, St. Lucie, and Ft. Calhoun. The BWR fuel assembly described is the assembly that produces the highest neutron and gamma sources and the highest decay heat load for a given burnup and cooling time from the following fuel assembly classes listed in Table 2.1.2: GE BWR/2-3, GE BWR/4-6, Humboldt Bay 7x7, and Dresden 1 8x8. Multiple SAS2H and ORIGEN-S calculations were performed to confirm that the B&W 15x15 and the GE 7x7, which have the highest UO_2 mass, bound all other PWR and BWR fuel assemblies, respectively. Section 5.2.5 discusses, in detail, the determination of the design basis fuel assemblies.

The design basis Humboldt Bay and Dresden 1 6x6 fuel assembly is described in Table 5.2.2. The fuel assembly type listed produces the highest total neutron and gamma sources from the fuel assemblies at Dresden 1 and Humboldt Bay. Table 5.2.21 provides a description of the design basis Dresden 1 MOX fuel assembly used in this analysis. The design basis 6x6 and MOX fuel assemblies which are smaller than the GE 7x7, are assumed to have the same hardware characteristics as the GE 7x7. This is conservative because the larger hardware mass of the GE 7x7 results in a larger ^{60}Co activity.

The design basis stainless steel clad fuel assembly for the Indian Point 1, Haddam Neck, and San Onofre 1 assembly classes is described in Table 5.2.3. This table also describes the design basis stainless steel clad LaCrosse fuel assembly.

The design basis assemblies mentioned above are the design basis assemblies for both intact and damaged fuel and fuel debris for their respective array classes. Analyses of damaged fuel are presented in Section 5.4.2. *For Indian Point 1 fuel, the analysis in this chapter is applicable only to the MPC-24. Supplement 5.II discusses storage of the Indian Point 1 fuel in the MPC-32.*

In performing the SAS2H and ORIGEN-S calculations, a single full power cycle was used to achieve the desired burnup. This assumption, in conjunction with the above-average specific powers listed in Tables 5.2.1, 5.2.2, 5.2.3, and 5.2.21 resulted in conservative source term calculations.

Sections 5.2.1 and 5.2.2 describe the calculation of gamma and neutron source terms for zircaloy clad fuel while Section 5.2.3 discusses the calculation of the gamma and neutron source terms for the stainless steel clad fuel.

5.2.1 Gamma Source

Tables 5.2.4 through 5.2.6 provide the gamma source in MeV/s and photons/s as calculated with SAS2H and ORIGEN-S for the design basis zircaloy clad fuels at varying burnups and cooling times. Tables 5.2.7 and 5.2.22 provides the gamma source in MeV/s and photons/s for the design basis 6x6 and MOX fuel, respectively.

Specific analysis for the HI-STORM 100 System, which includes the HI-STORM storage overpacks and the HI-TRAC transfer casks, was performed to determine the dose contribution from gammas as a function of energy. This analysis considered dose locations external to the 100-ton HI-TRAC transfer cask and the HI-STORM 100 overpack and vents. The results of this analysis have revealed that, due to the magnitude of the gamma source at lower energies, gammas with energies as low as 0.45 MeV must be included in the shielding analysis. The effect of gammas with energies above 3.0 MeV, on the other hand, was found to be insignificant (less than 1% of the total gamma dose at all high dose locations). This is due to the fact that the source of gammas in this range (i.e., above 3.0 MeV) is extremely low (less than 1% of the total source). Therefore, all gammas with energies in the range of 0.45 to 3.0 MeV are included in the shielding calculations. Dose rate contributions from above and below this range were evaluated and found to be negligible. Photons with energies below 0.45 MeV are too weak to penetrate the HI-STORM overpack or HI-TRAC, and photons with energies above 3.0 MeV are too few to contribute significantly to the external dose.

The primary source of activity in the non-fuel regions of an assembly arises from the activation of ^{59}Co to ^{60}Co. The primary source of ^{59}Co in a fuel assembly is impurities in the steel structural material above and below the fuel. The zircaloy in these regions is neglected since it does not have a significant ^{59}Co impurity level. Reference [5.2.2] indicates that the impurity level in steel is 800 ppm or 0.8 gm/kg. Conservatively, the impurity level of ^{59}Co was assumed to be 1000 ppm or 1.0 gm/kg. Therefore, Inconel and stainless steel in the non-fuel regions are both conservatively assumed to have the same 1.0 gm/kg impurity level.

SUPPLEMENT 5.II

SHIELDING EVALUATION OF THE HI-STORM 100 SYSTEM FOR IP1

5.II.0 INTRODUCTION

Indian Point Unit 1 (IP1) fuel assemblies, which have a maximum burnup of 30,000 MWD/MTU and a minimum cooling time of 30 years, are considerably shorter (approximately 137 inches) than most PWR assemblies. As a result of this reduced height and a crane capacity of 75 tons at IP1, the HI-STORM 100 System has been expanded to include options specific for use at IP1 as described in Supplement 1.II.

This supplement is focused on providing a shielding evaluation of the HI-STORM 100 system as modified for IP1. The evaluation presented herein supplements those evaluations of the HI-STORM overpacks contained in the main body of Chapter 5 of this FSAR and information in the main body of Chapter 5 that remains applicable to the HI-STORM 100 system at IP1 is not repeated in this supplement. To aid the reader, the sections in this supplement are numbered in the same fashion as the corresponding sections in the main body of this chapter, i.e., Sections 5.II.1 through 5.II.5 correspond to Sections 5.1 through 5.5. Tables and figures in this supplement are labeled sequentially.

The purpose of this supplement is to show that the dose rates from the HI-STORM system for IP1 are bounded by the dose rates calculated in the main section of this chapter, thereby demonstrating that the HI-STORM system for IP1 will comply with the radiological regulatory requirements.

5.II.1 DISCUSSION AND RESULTS

The HI-STORM 100 system for IP1 differs slightly from the HI-STORM system evaluated in the main body of this chapter. From a shielding perspective, the only difference in the overpack and MPC is the height. The top and bottom and radial thickness are identical. Therefore, considering the low burnup and long cooling time of the IP1 fuel, the dose rates from a HI-STORM 100S Version B overpack at IP1 containing the IP1 MPC-32 are bounded by the results presented in the main body of the chapter. Therefore, no specific analysis is provided in this supplement for the HI-STORM 100S Version B at IP1.

The HI-TRAC 100D Version IP1 is also shorter than the HI-TRAC 100D analyzed in the main body of this chapter. In addition to a shorter height, the radial thicknesses of the lead and outer shell have been reduced. However, the top and bottom of the HI-TRAC 100D Version IP1 are identical to the HI-TRAC 100D. Section 5.II.3 describes the HI-TRAC 100D Version IP1 as it was modeled in this supplement.

HOLTEC INTERNATIONAL COPYRIGHTED MATERIAL

5.II.1.1 Normal Conditions

Shielding analyses were performed for the HI-TRAC 100D Version IP1 loaded with an IP1 MPC-32. A single burnup and cooling time combination of 30,000 MWD/MTU and 30 years was analyzed. Table 5.II.1 presents the results for the normal condition, where the MPC is dry and the HI-TRAC water jacket is filled with water ~~at the midplane of the overpack. Since the only change in shielding between the HI-TRAC 100D and the 100D Version IP1 is in the radial direction, it is reasonable to present only the dose rates at the midplane of the overpack.~~ A comparison of the results in Table 5.II.1 to the results in Tables 5.4.11, ~~and~~ 5.4.12 and 5.4.19 demonstrate that the dose rates from the HI-TRAC 100D Version IP1 are considerably less than and bounded by the dose rates from the HI-TRAC 100 and HI-TRAC 100D with design basis fuel.

5.II.1.2 Accident Conditions

The bounding accident condition for the HI-TRAC 100D Version IP1 is the loss of all water in the water jacket during a transfer operation with a dry MPC. Shielding analyses were performed for this condition for the same burnup and cooling time used in the analysis of the normal condition. Table 5.II.2 presents the results of the analysis. ~~Consistent with evaluations in the main part of this chapter, only the 1 meter dose rates for dose point 2 are reported.~~ A comparison of the results in Table 5.II.2 to the results in Tables 5.1.10 demonstrate that the dose rates from the HI-TRAC 100D Version IP1 are considerably less than and are bounded by the dose rates from the HI-TRAC 100 with design basis fuel. Further, since the dose rates at 1 meter are considerably less than those of the HI-TRAC 100 it can be concluded that dose rates at the 100 meter controlled area boundary for HI-TRAC 100D Version IP1 are also bounded by those of the HI-TRAC 100.

5.II.1.3 Fuel Condition

The Indian Point 1 assemblies are assumed damaged and are to be placed into DFCs for the purpose of compliance with the damaged fuel definition. However, they are not actually considered damaged. All assemblies have been inspected and are considered intact. In actuality, the design of the assemblies with the shroud surrounding the rods and the cladding made out of stainless steel, they would be much less likely to be damaged under any accident condition than standard PWR assemblies. The distinction between intact and damaged fuel is of primary importance from a criticality perspective, specifically for the situation at Indian Point Unit 1 where the assemblies are located in a non-borated pool. Nevertheless, to show the potential effect on dose rates from damage to the assemblies, studies were performed consistent with the calculations discussed in Section 5.4.2.2. The analysis consisted of modeling the fuel assemblies in all locations in the MPC-32 with a fuel density that was twice the normal fuel amount per unit length and correspondingly increasing the source rate for these locations by a factor of two. The fuel is spread over the entire cross section of the DFC. A flat axial power distribution was used which is approximately representative of the source distribution if the top half of an assembly collapsed into the bottom half of the assembly. Increasing the fuel amount

HOLTEC INTERNATIONAL COPYRIGHTED MATERIAL

per unit length over the entire fuel length, rather than in the top half or bottom half of the fuel assembly, is conservative and provides the dose rate change in both the top and bottom portion of the cask. Results are presented in Table 5.II.3 for both normal and accident conditions (see Sections 5.II.1.1 and 5.II.1.2). The results for the normal condition show a small increase *of about* 3.7% *for the maximum dose rate at dose location 2, and increases of up to 21% and 43% at the top and bottom of the casks, respectively. The results for the accident condition show a small increase of about 10% for the maximum dose rate at dose location 2, and increases of up to 28% and 46% at the top and bottom of the casks, respectively. Several other configurations were evaluated, involving different combinations of increased or decreased fuel amount and/or fuel cross section. They all resulted in a smaller increase or even decrease of dose rates. The condition identified above therefore presents a bounding condition for damaged fuel. In that context also note that the shielding effect of the damaged fuel container was neglected in the MCNP model.*

5.II.2 SOURCE SPECIFICATION

The characteristics of the Indian Point Unit 1 fuel assembly are shown in Table 5.II.4~~2~~. The maximum length of the active fuel zone in this assembly is 102 inches. However, the source term was calculated assuming an active fuel length of 144 inches. The longer active fuel length was used for ease of modeling as described in Section 5.II.3. The end fittings above and below the active fuel zone were assumed to be identical to the end fittings of the design basis zircaloy PWR fuel assembly described in Section 5.2. Tables 5.II.~~3~~5 and 5.II.~~4~~6 presents the neutron and gamma source term for the active fuel region of the IP1 fuel assemblies.

Earlier manufactured fuel such as the IP1 fuel potentially has a higher cobalt content in the stainless steel parts of the assembly than more recent fuel. As a bounding approach, a high cobalt content of 2.2 g/kg is assumed for all stainless steel parts of the fuel assembly, including the cladding. This value bounds the highest measurement value documented in [5.2.3]

The source term for the IP1 fuel was based on an initial minimum enrichment of 3.5 w/o ^{235}U and burnup of 30,000 MWD/MTU. IP1 has four fuel assemblies that have an initial enrichment less than 3.5 wt% ^{235}U. These four assemblies have a burnup less than 10,000 MWD/MTU and an enrichment that is greater than 2.7 wt%. The source term from the design basis IP1 fuel assembly with an enrichment of 3.5 wt% and a burnup of 30,000 MWD/MTU bounds the source term from a fuel assembly with 2.7 wt% and a burnup of 10,000 MWD/MTU. The calculations provided here therefore bound all IP1 assemblies.

IP1 fuel assemblies resemble BWR fuel assemblies in that they have a shroud that encompasses the fuel rods similar to the channel around BWR fuel. However, unlike BWR channels, the shroud is perforated with uniformly spaced holes. Characteristics of the shroud are shown in Table 5.II.4. The 47% open area due to these holes was used to calculate t~~T~~he source term from the activation of the~~is~~ shroud with a cobalt-59 impurity level of 2.2 gm/kg [5.2.3] ~~was considered in this analysis~~ and is included in Table 5.II.~~4~~6.

5.II.2.1 Secondary Sources

Antimony-beryllium sources were used as secondary (regenerative) neutron sources in IP1. The Sb-Be source produces neutrons from a gamma-n reaction in the beryllium, where the gamma originates from the decay of neutron-activated antimony. The very short half-life of ^{124}Sb, 60.2 days, however results in a complete decay of the initial amount generated in the reactor within a few years after removal from the reactor. ~~The production of neutrons by the Sb-Be source through regeneration in the MPC is orders of magnitude lower than the design-basis fuel assemblies. Therefore Sb-Be sources do not contribute to the total neutron source in the MPC and are not specifically analyzed in this supplement.~~Analyses also show that the re-generation of ^{124}Sb through the fuel neutrons is too small to generate a noticeable neutron source from the Be. However, neutrons are generated in the Be through Be's gamma-n reaction and the gamma radiation from the fuel. A detailed analysis of this situation has been analyzed for the MPC-32 and a 14x14 assembly type with zircaloy clad fuel. Results from this assembly bound the condition with IP1 fuel in the MPC-32, since the IP1 fuel has stainless steel cladding. This would result in reduced gamma radiation levels for the same burnup and cooling time. The IP1 assemblies contain the source in a single rod that replaces one of the fuel rods. However, the length of the source in the rod is not known. It is therefore conservatively assumed that the length of the source is equal to the active fuel length. Under these conditions, the neutron generation from a single source would be 3.83E+4 *n/s. With a neutron source strength of a fuel assembly of 2.17E+7 n/s, this represents less than 0.5% of the neutron source strength of the assembly, and is in fact similar to the source strength of the rod that is replaced by the secondary source. Therefore, it is not necessary to explicitly consider the sources in the dose rate analyses.*

Regarding the steel portions of the neutron source, it is important to note that Indian Point Unit 1 secondary source devices were not removable inserts. Instead, these devices replaced a stainless steel clad fuel rod in the fuel assembly. Therefore, the secondary sources were in the core for the same amount of time as the assembly in which they were placed and have achieved the same burnup as the fuel assembly. As a result, the gamma source term from a fuel assembly containing all fuel rods bounds the gamma source term from a fuel assembly containing a secondary source device.

5.II.3 MODEL SPECIFICATIONS

The shielding analyses of the HI-TRAC 100D Version IP1 are performed with MCNP-4A, which is the same code used for the analyses presented in the main body of this chapter.

Section 1.5 provides the drawings that describe the HI-TRAC 100D Version IP1. These drawings, using nominal dimensions, were used to create the MCNP models used in the radiation transport calculations. Since the HI-TRAC 100D Version IP1 is a variation of the HI-TRAC 100D, the model of the 100D was modified by appropriately reducing the radial dimensions of the 100D model. Conservatively, the axial height was not changed. Table 5.II.7~~5~~

HOLTEC INTERNATIONAL COPYRIGHTED MATERIAL

shows the radial thicknesses of the shielding materials in the 100D Version IP1 compared to the 100D.

In order to represent the IP1 fuel assemblies, the 144 inch active fuel region of the design basis PWR fuel assembly was not changed to represent the IP1 fuel assemblies. This conservatively modeled the active fuel region as 144 inches in length rather than 102 inches. The shielding effect of the shroud around the fuel assembly was conservatively neglected in the MCNP model.

~~n~~ ~~S~~ *~~5.4.2.2h assemblies on the periphery dominate the radial dose rates~~Note that the ~~IP1 fuel assemblies are considered intact and have all been inspected with no visible damage identified. However, it may not be possible to classify these assemblies as intact due to insufficient records. - Therefore, all IP1 fuel assemblies are required to be stored in a damaged fuel container. Conservatively, the~~ shielding effect of the damaged fuel container was neglected in the MCNP model. ~~Since the IP1 fuel assemblies are considered intact, the analysis in this supplement treated the fuel assemblies as intact.~~*

5.II.4 SHIELDING EVALUATION

Table 5.II.1 provides dose rates adjacent to and at 1 meter distance from ~~the midplane of~~ the HI-TRAC 100D Version IP1 during normal conditions for the MPC-32. Table 5.II.2 provides dose rate at 1 meter distance on the mid-plane for the HI-TRAC 100D Version IP1 during accident conditions for the MPC-32. Table 5.II.3 provides dose rates assuming damaged condition for the fuel. These results demonstrate that the dose rates around the HI-TRAC 100D Version IP1 are considerably lower than the HI-TRAC 100 and 100D as documented in Section 5.4.

5.II.5 REGULATORY COMPLIANCE

In summary it can be concluded that dose rates from the HI-STORM 100 system as modified for IP1 are bounded by the dose rates for the overpacks analyzed in the main body of the report. The shielding system of the HI-STORM 100 system is therefore in compliance with 10CFR72 and satisfies the applicable design and acceptance criteria including 10CFR20. Thus, the shielding evaluation presented in this supplement provides reasonable assurance that the HI-STORM 100 system for IP1 will allow safe storage of IP1 spent fuel.

HOLTEC INTERNATIONAL COPYRIGHTED MATERIAL

Table 5.II.1

DOSE RATES ADJACENT TO AND 1 METER FROM THE HI-TRAC 100D VERSION IP1 FOR NORMAL CONDITIONS†††
MPC-32 WITH INTACT IP1 FUEL
30,000 MWD/MTU AND 30-YEAR COOLING

Dose Point† Location	**Fuel Gammas†† (mrem/hr)**	**^{60}Co Gammas (mrem/hr)**	**Neutrons (mrem/hr)**	**Totals (mrem/hr)**
ADJACENT TO HI-TRAC 100D VERSION IP1				
1	*25.42*	*152.92*	*11.72*	*190.06*
2	*480.57*	*0.21*	*10.68*	*491.46*
3	*4.42*	*54.45*	*11.74*	*70.61*
ONE METER FROM HI-TRAC 100D VERSION IP1				
1	*64.00*	*25.32*	*3.02*	*92.35*
2	*205.71*	*1.79*	*4.02*	*211.52*
3	*27.08*	*16.18*	*1.69*	*44.95*

† *Refer to Figure 5.1.4.*

†† *Gammas generated by neutron capture are included with fuel gammas.*

††† *Dose rate based on no water within the MPC. For the majority of the duration that the HI-TRAC pool lid is installed, the MPC cavity will be flooded with water. The water within the MPC greatly reduces the dose rate.*

HOLTEC INTERNATIONAL COPYRIGHTED MATERIAL

Table 5.II.2

DOSE RATES ONE METER FROM THE
HI-TRAC 100D VERSION IP1 FOR ACCIDENT CONDITIONS†††
MPC-32 WITH INTACT IP1 FUEL
30,000 MWD/MTU AND 30-YEAR COOLING

Dose Point† Location	***Fuel Gammas†† (mrem/hr)***	***^{60}Co Gammas (mrem/hr)***	***Neutrons (mrem/hr)***	***Totals (mrem/hr)***
1	*114.01*	*37.73*	*47.73*	*199.46*
2	*366.25*	*3.23*	*97.04*	*466.52*
3	*49.17*	*24.28*	*22.34*	*95.78*

† *Refer to Figure 5.1.4.*

†† *Gammas generated by neutron capture are included with fuel gammas.*

††† *Dose rate based on no water within the MPC and no water in the water jacket.*

HOLTEC INTERNATIONAL COPYRIGHTED MATERIAL

Table 5.II.3

DOSE RATES ADJACENT TO AND 1 METER FROM THE HI-TRAC 100D VERSION IP1 FOR NORMAL AND ACCIDENT CONDITIONS ASSUMING DAMAGED FUEL MPC-32 WITH IP1 FUEL 30,000 MWD/MTU AND 30-YEAR COOLING

Dose Point† Location	***Fuel Gammas†† (mrem/hr)***	***^{60}Co Gammas (mrem/hr)***	***Neutrons (mrem/hr)***	***Totals (mrem/hr)***
NORMAL CONDITION ADJACENT TO HI-TRAC 100D VERSION IP1				
1	48.00	152.92	26.08	226.99
2	495.01	2.36	11.97	509.34
3	8.71	54.45	37.69	100.85
NORMAL CONDITION ONE METER FROM HI-TRAC 100D VERSION IP1				
1	81.53	25.32	5.73	112.58
2	212.38	1.79	5.36	219.53
3	40.42	16.18	4.91	61.51
ACCIDENT CONDITION ONE METER FROM HI-TRAC 100D VERSION IP1				
1	143.24	37.73	73.84	254.8
2	379.33	3.23	130.27	512.82
3	70.89	24.28	44.65	139.82

† Refer to Figure 5.1.4.

†† Gammas generated by neutron capture are included with fuel gammas.

††† *Dose rate based on no water within the MPC. For the majority of the duration that the HI-TRAC pool lid is installed, the MPC cavity will be flooded with water. The water within the MPC greatly reduces the dose rate.*

HOLTEC INTERNATIONAL COPYRIGHTED MATERIAL

Table 5.II.~~42~~

DESCRIPTION OF DESIGN BASIS STAINLESS STEEL CLAD FUEL

Description	***Value***
Fuel type	*14x14*
Active fuel length (in.)	*144*
No. of fuel rods	*173*
Rod pitch (in.)	*0.441*
Cladding material	*Stainless steel*
Rod diameter (in.)	*0.3415*
Cladding thickness (in.)	*0.012*
Pellet diameter (in.)	*0.313*
Pellet material	UO_2
Pellet density (gm/cc)	*10.412 (95% of theoretical)*
Enrichment (w/o ^{235}U*)*	*3.5*
Burnup (MWD/MTU)	*30,000*
Cooling Time (years)	*30*
Specific power (MW/MTU)	*25.09*
No. of guide tubes	*0*
Shroud material	*Stainless steel*
Shroud thickness (in.)	*0.035*
Percent open area of shroud	*47*

HOLTEC INTERNATIONAL COPYRIGHTED MATERIAL

Table 5.II.~~3~~5

CALCULATED NEUTRON SOURCE PER ASSEMBLY FOR STAINLESS STEEL CLAD IP1 FUEL

Lower Energy (MeV)	***Upper Energy (MeV)***	***30,000 MWD/MTU 30-Year Cooling (Neutrons/s)***
1.0e-01	*4.0e-01*	*7.76e+05*
4.0e-01	*9.0e-01*	*3.97e+06*
9.0e-01	*1.4*	*3.72e+06*
1.4	*1.85*	*2.86e+06*
1.85	*3.0*	*5.47e+06*
3.0	*6.43*	*4.55e+06*
6.43	*20.0*	*3.78e+05*
Total		*2.17e+07*

HOLTEC INTERNATIONAL COPYRIGHTED MATERIAL

Table 5.II.64

CALCULATED FUEL GAMMA SOURCE PER ASSEMBLY FOR STAINLESS STEEL CLAD IP1 FUEL

Lower Energy	***Upper Energy***	***30,000 MWD/MTU 30-Year Cooling***	
(MeV)	*(MeV)*	*(MeV/s)*	*(Photons/s)*
4.5e-01	*7.0e-01*	*2.94e+14*	*5.10e+14*
7.0e-01	*1.0*	*4.38e+12*	*5.15e+12*
1.0	*1.5*	3.15e+13	*2.52*e+*13*
1.5	*2.0*	*2.94e+11*	*1.68e+11*
2.0	*2.5*	*2.82e+09*	*1.25e+09*
2.5	*3.0*	*1.85e+08*	*6.72e+07*
Totals		*3.13e+14*	*5.27e+14*

HOLTEC INTERNATIONAL COPYRIGHTED MATERIAL

Table 5.II.7~~5~~

A COMPARISON OF THE RADIAL SHIELDING THICKNESSES OF THE HI-TRAC 100D VERSION IP1 AND THE HI-TRAC 100D

Shielding Material	***HI-TRAC 100D***	***HI-TRAC 100D Version IP1***
Inner steel shell (in.)	*0.75*	*0.75*
Lead (in.)	*2.875*	*2.5*
Outer steel shell (in.)	*1.0*	*0.75*
Water in water jacket (in.)	*5.0*	*5.0*
Steel water jacket enclosure (in.)	*0.375*	*0.375*
Total thickness (in.)	*10.0*	*9.375*

HOLTEC INTERNATIONAL COPYRIGHTED MATERIAL

Table 6.1.1

BOUNDING MAXIMUM k_{eff} VALUES FOR EACH ASSEMBLY CLASS IN THE MPC-24
(no soluble boron)

Fuel Assembly Class	Maximum Allowable Enrichment (wt% ^{235}U)	Maximum† k_{eff}		
		HI-STORM	HI-TRAC	HI-STAR
14x14A	4.6	0.3080	0.9283	0.9296
14x14B	4.6	---	0.9237	0.9228
14x14C	4.6	---	0.9274	0.9287
14x14D	4.0	---	0.8531	0.8507
14x14E	5.0‡	---	0.7627	0.7627
15x15A	4.1	---	0.9205	0.9204
15x15B	4.1	---	0.9387	0.9388
15x15C	4.1	---	0.9362	0.9361
15x15D	4.1	---	0.9354	0.9367
15x15E	4.1	---	0.9392	0.9368
15x15F	4.1	0.3648	0.9393††	0.9395†††
15x15G	4.0	---	0.8878	0.8876
15x15H	3.8	---	0.9333	0.9337
16x16A	4.6	0.3447	0.9273	0.9287
17x17A	4.0	0.3243	0.9378	0.9368
17x17B	4.0	---	0.9318	0.9324
17x17C	4.0	---	0.9319	0.9336

Note: The HI-STORM results are for internally dry (no moderator) HI-STORM storage casks with full water reflection on all sides, the HI-TRAC results are for internally fully flooded HI-TRAC transfer casks (which are part of the HI-STORM 100 System) with full water reflection on all sides, and the HI-STAR results are for unreflected, internally fully flooded HI-STAR casks.

† The term "maximum k_{eff}" as used here, and elsewhere in this document, means the highest possible k-effective, including bias, uncertainties, and calculational statistics, evaluated for the worst case combination of manufacturing tolerances.

‡ *For Assembly Class 14x14E, the maximum enrichment is limited to 4.5 wt% in Section 2.1.9.*

†† KENO5a verification calculation resulted in a maximum k_{eff} of 0.9383.

††† KENO5a verification calculation resulted in a maximum k_{eff} of 0.9378.

HOLTEC INTERNATIONAL COPYRIGHTED MATERIAL

Table 6.1.2

BOUNDING MAXIMUM k_{eff} VALUES FOR EACH ASSEMBLY CLASS IN THE MPC-24 WITH 400 PPM SOLUBLE BORON

Fuel Assembly Class	**Maximum Allowable Enrichment (wt% ^{235}U)**	**Maximum† k_{eff}**		
		HI-STORM	**HI-TRAC**	**HI-STAR**
14x14A	5.0	---	---	0.8884
14x14B	5.0	---	---	0.8900
14x14C	5.0	---	---	0.8950
14x14D	5.0	---	---	0.8518
14x14E	5.0‡	---	---	0.7132
15x15A	5.0	---	---	0.9119
15x15B	5.0	---	---	0.9284
15x15C	5.0	---	---	0.9236
15x15D	5.0	---	---	0.9261
15x15E	5.0	---	---	0.9265
15x15F	5.0	0.4013	0.9301	0.9314
15x15G	5.0	---	---	0.8939
15x15H	5.0	---	0.9345	0.9366
16x16A	5.0	---	---	0.8955
17x17A	5.0	---	---	0.9264
17x17B	5.0	---	---	0.9284
17x17C	5.0	---	0.9296	0.9294

Note: The HI-STORM results are for internally dry (no moderator) HI-STORM storage casks with full water reflection on all sides, the HI-TRAC results are for internally fully flooded HI-TRAC transfer casks (which are part of the HI-STORM 100 System) with full water reflection on all sides, and the HI-STAR results are for unreflected, internally fully flooded HI-STAR casks.

† The term "maximum k_{eff}" as used here, and elsewhere in this document, means the highest possible k-effective, including bias, uncertainties, and calculational statistics, evaluated for the worst case combination of manufacturing tolerances.

‡ *For Assembly Class 14x14E, the maximum enrichment is limited to 4.5 wt% in Section 2.1.9.*

HOLTEC INTERNATIONAL COPYRIGHTED MATERIAL

Table 6.1.3

BOUNDING MAXIMUM k_{eff} VALUES FOR EACH ASSEMBLY CLASS IN THE MPC-24E AND MPC-24EF (no soluble boron)

Fuel Assembly Class	**Maximum Allowable Enrichment (wt% ^{235}U)**	**Maximum† k_{eff}**		
		HI-STORM	**HI-TRAC**	**HI-STAR**
14x14A	5.0	---	---	0.9380
14x14B	5.0	---	---	0.9312
14x14C	5.0	---	---	0.9356
14x14D	5.0	---	---	0.8875
14x14E	5.0‡	---	---	0.7651
15x15A	4.5	---	---	0.9336
15x15B	4.5	---	---	0.9465
15x15C	4.5	---	---	0.9462
15x15D	4.5	---	---	0.9440
15x15E	4.5	---	---	0.9455
15x15F	4.5	0.3699	0.9465	0.9468
15x15G	4.5	---	---	0.9054
15x15H	4.2	---	---	0.9423
16x16A	5.0	---	---	0.9341
17x17A	4.4	---	0.9467	0.9447
17x17B	4.4	---	---	0.9421
17x17C	4.4	---	---	0.9433

Note: The HI-STORM results are for internally dry (no moderator) HI-STORM storage casks with full water reflection on all sides, the HI-TRAC results are for internally fully flooded HI-TRAC transfer casks (which are part of the HI-STORM 100 System) with full water reflection on all sides, and the HI-STAR results are for unreflected, internally fully flooded HI-STAR casks.

† The term "maximum k_{eff}" as used here, and elsewhere in this document, means the highest possible k-effective, including bias, uncertainties, and calculational statistics, evaluated for the worst case combination of manufacturing tolerances.

‡ *For Assembly Class 14x14E, the maximum enrichment is limited to 4.5 wt% in Section 2.1.9.*

HOLTEC INTERNATIONAL COPYRIGHTED MATERIAL

Table 6.1.4

BOUNDING MAXIMUM k_{eff} VALUES FOR EACH ASSEMBLY CLASS IN THE MPC-24E AND MPC-24EF WITH 300 PPM SOLUBLE BORON

Fuel Assembly Class	**Maximum Allowable Enrichment (wt% ^{235}U)**	**Maximum† k_{eff}**		
		HI-STORM	**HI-TRAC**	**HI-STAR**
14x14A	5.0	---	---	0.8963
14x14B	5.0	---	---	0.8974
14x14C	5.0	---	---	0.9031
14x14D	5.0	---	---	0.8588
14x14E	5.0‡	---	---	0.7249
15x15A	5.0	---	---	0.9161
15x15B	5.0	---	---	0.9321
15x15C	5.0	---	---	0.9271
15x15D	5.0	---	---	0.9290
15x15E	5.0	---	---	0.9309
15x15F	5.0	0.3897	0.9333	0.9332
15x15G	5.0	---	---	0.8972
15x15H	5.0	---	0.9399	0.9399
16x16A	5.0	---	---	0.9021
17x17A	5.0	---	0.9320	0.9332
17x17B	5.0	---	---	0.9316
17x17C	5.0	---	---	0.9312

Note: The HI-STORM results are for internally dry (no moderator) HI-STORM storage casks with full water reflection on all sides, the HI-TRAC results are for internally fully flooded HI-TRAC transfer casks (which are part of the HI-STORM 100 System) with full water reflection on all sides, and the HI-STAR results are for unreflected, internally fully flooded HI-STAR casks.

† The term "maximum k_{eff}" as used here, and elsewhere in this document, means the highest possible k-effective, including bias, uncertainties, and calculational statistics, evaluated for the worst case combination of manufacturing tolerances.

‡ *For Assembly Class 14x14E, the maximum enrichment is limited to 4.5 wt% in Section 2.1.9.*

HOLTEC INTERNATIONAL COPYRIGHTED MATERIAL

Table 6.1.5

BOUNDING MAXIMUM k_{eff} VALUES FOR EACH ASSEMBLY CLASS IN THE MPC-32 AND MPC-32F FOR 4.1% ENRICHMENT

Fuel Assembly Class	Maximum Allowable Enrichment (wt% ^{235}U)	Minimum Soluble Boron Concentration (ppm) *	Maximum† k_{eff}		
			HI-STORM	HI-TRAC	HI-STAR
14x14A	4.1	1300	---	---	0.9041
14x14B	4.1	1300	---	---	0.9257
14x14C	4.1	1300	---	---	0.9423
14x14D	4.1	1300	---	---	0.8970
14x14E††	~~4.1~~*n/a*	~~1300~~*n/a*	~~---~~*n/a*	~~---~~*n/a*	~~0.7340~~*n/a*
15x15A	4.1	1800	---	---	0.9206
15x15B	4.1	1800	---	---	0.9397
15x15C	4.1	1800	---	---	0.9266
15x15D	4.1	1900	---	---	0.9384
15x15E	4.1	1900	---	---	0.9365
15x15F	4.1	1900	0.4691	0.9403	0.9411
15x15G	4.1	1800	---	---	0.9147
15x15H	4.1	1900	---	---	0.9276
16x16A	4.1	1300	---	---	0.9468
17x17A	4.1	1900	---	---	0.9111
17x17B	4.1	1900	---	---	0.9309
17x17C	4.1	1900	---	0.9365	0.9355

Note: The HI-STORM results are for internally dry (no moderator) HI-STORM storage casks with full water reflection on all sides, the HI-TRAC results are for internally fully flooded HI-TRAC transfer casks (which are part of the HI-STORM 100 System) with full water reflection on all sides, and the HI-STAR results are for unreflected, internally fully flooded HI-STAR casks.

* For maximum allowable enrichments between 4.1 wt% ^{235}U and 5.0 wt% ^{235}U, the minimum soluble boron concentration may be calculated by linear interpolation between the minimum soluble boron concentrations specified in Table 6.1.5 and Table 6.1.6 for each assembly class.

† The term "maximum k_{eff}" as used here, and elsewhere in this document, means the highest possible k-effective, including bias, uncertainties, and calculational statistics, evaluated for the worst case combination of manufacturing tolerances.

†† *The 14x14E class in the MPC-32 is analyzed in Supplement 6.II*

HOLTEC INTERNATIONAL COPYRIGHTED MATERIAL

Table 6.1.6
BOUNDING MAXIMUM k_{eff} VALUES FOR EACH ASSEMBLY CLASS IN THE MPC-32 AND MPC-32F FOR 5.0% ENRICHMENT

Fuel Assembly Class	Maximum Allowable Enrichment (wt% ^{235}U)	Minimum Soluble Boron Concentration (ppm) *	Maximum† k_{eff}		
			HI-STORM	HI-TRAC	HI-STAR
14x14A	5.0	1900	---	---	0.9000
14x14B	5.0	1900	---	---	0.9214
14x14C	5.0	1900	---	---	0.9480
14x14D	5.0	1900	---	---	0.9050
14x14E††	~~5.0~~*n/a*	~~1900~~*n/a*	~~---~~*n/a*	~~---~~*n/a*	~~0.7415~~*n/a*
15x15A	5.0	2500	---	---	0.9230
15x15B	5.0	2500	---	---	0.9429
15x15C	5.0	2500	---	---	0.9307
15x15D	5.0	2600	---	---	0.9466
15x15E	5.0	2600	---	---	0.9434
15x15F	5.0	2600	0.5142	0.9470	0.9483
15x15G	5.0	2500	---	---	0.9251
15x15H	5.0	2600	---	---	0.9333
16x16A	5.0	1900	---	---	0.9474
17x17A	5.0	2600	---	---	0.9161
17x17B	5.0	2600	---	---	0.9371
17x17C	5.0	2600	---	0.9436	0.9437

Note: The HI-STORM results are for internally dry (no moderator) HI-STORM storage casks with full water reflection on all sides, the HI-TRAC results are for internally fully flooded HI-TRAC transfer casks (which are part of the HI-STORM 100 System) with full water reflection on all sides, and the HI-STAR results are for unreflected, internally fully flooded HI-STAR casks.

* For maximum allowable enrichments between 4.1 wt% ^{235}U and 5.0 wt% ^{235}U, the minimum soluble boron concentration may be calculated by linear interpolation between the minimum soluble boron concentrations specified in Table 6.1.5 and Table 6.1.6 for each assembly class.

† The term "maximum k_{eff} "as used here, and elsewhere in this document, means the highest possible k-effective, including bias, uncertainties, and calculational statistics, evaluated for the worst case combination of manufacturing tolerances.

†† *The 14x14E class in the MPC-32 is analyzed in Supplement 6.II*

HOLTEC INTERNATIONAL COPYRIGHTED MATERIAL

Table 6.1.9

BOUNDING MAXIMUM k_{eff} VALUES FOR THE MPC-24E AND MPC-24EF WITH UP TO 4 DFCs

Fuel Assembly Class	**Maximum Allowable Enrichment (wt% ^{235}U)**		**Minimum Soluble Boron Concentration (ppm)**	**Maximum k_{eff}**	
	Intact Fuel	**Damaged Fuel and Fuel Debris**		**HI-TRAC**	**HI-STAR**
All PWR Classes	4.0	4.0	0	0.9486	0.9480
All PWR Classes[‡]	5.0	5.0	600	0.9177	0.9185

Table 6.1.10

BOUNDING MAXIMUM k_{eff} VALUES FOR THE MPC-68, MPC-68F AND MPC-68FF WITH UP TO 68 DFCs

Fuel Assembly Class	**Maximum Allowable Planar-Average Enrichment (wt% ^{235}U)**		**Maximum k_{eff}**	
	Intact Fuel	**Damaged Fuel and Fuel Debris**	**HI-TRAC**	**HI-STAR**
6x6A, 6x6B, 6x6C, 7x7A, 8x8A	2.7	2.7	0.8024	0.8021

Table 6.1.11

BOUNDING MAXIMUM k_{eff} VALUES FOR THE MPC-68 AND MPC-68FF WITH UP TO 16 DFCs

Fuel Assembly Class	**Maximum Allowable Planar-Average Enrichment (wt% ^{235}U)**		**Maximum k_{eff}**	
	Intact Fuel	**Damaged Fuel and Fuel Debris**	**HI-TRAC**	**HI-STAR**
All BWR Classes	3.7	4.0	0.9328	0.9328

[‡] *For Assembly Class 14x14E, the maximum enrichment is limited to 4.5 wt% in Section 2.1.9.*

HOLTEC INTERNATIONAL COPYRIGHTED MATERIAL

Table 6.1.12

BOUNDING MAXIMUM k_{eff} VALUES FOR THE MPC-32 AND MPC-32F WITH UP TO 8 DFCs

Fuel Assembly Class of Intact Fuel	**Maximum Allowable Enrichment for Intact Fuel and Damaged Fuel/Fuel Debris (wt% ^{235}U)**	**Minimum Soluble Boron Content (ppm)** †	**Maximum k_{eff}**	
			HI-TRAC	**HI-STAR**
14x14A, B, C, D, E	4.1	1500	---	0.9336
	5.0	2300	---	0.9269
15x15A, B, C, G	4.1	1900	0.9349	0.9350
	5.0	2700	---	0.9365
15x15D, E, F, H	4.1	2100	---	0.9340
	5.0	2900	0.9382	0.9397
16x16A	4.1	1500	---	0.9335
	5.0	2300	---	0.9289
17x17A, B, C	4.1	2100	---	0.9294
	5.0	2900	---	0.9367

† For maximum allowable enrichments between 4.1 wt% ^{235}U and 5.0 wt% ^{235}U, the minimum soluble boron concentration may be calculated by linear interpolation between the minimum soluble boron concentrations specified for each assembly class.

HOLTEC INTERNATIONAL COPYRIGHTED MATERIAL

Table 6.4.10

MAXIMUM k_{eff} VALUES WITH FILLED AND VOIDED GUIDE TUBES FOR THE MPC-32 AT 5.0 wt% ENRICHMENT

Fuel Class	Minimum Soluble Boron Content (ppm)	MPC-32 @ 5.0 %			
		Guide Tubes Filled,		Guide Tubes Voided,	
		1.0 g/cm^3	0.93 g/cm^3	1.0 g/cm^3	0.93 g/cm^3
14x14A	1900	0.8984	0.9000	0.8953	0.8943
14x14B	1900	0.9210	0.9214	0.9164	0.9118
14x14C	1900	0.9371	0.9376	0.9480	0.9421
14x14D	1900	0.9050	0.9027	0.8947	0.8904
~~14x14E~~	~~1900~~	~~0.7415~~	~~0.7301~~	~~n/a~~	~~n/a~~
15x15A	2500	0.9210	0.9223	0.9230	0.9210
15x15B	2500	0.9402	0.9420	0.9429	0.9421
15x15C	2500	0.9258	0.9292	0.9307	0.9293
15x15D	2600	0.9426	0.9419	0.9466	0.9440
15x15E	2600	0.9394	0.9415	0.9434	0.9442
15x15F	2600	0.9445	0.9465	0.9483	0.9460
15x15G	2500	0.9228	0.9244	0.9251	0.9243
15X15H	2600	0.9271	0.9301	0.9317	0.9333
16X16A	1900	0.9460	0.9450	0.9474	0.9434
17x17A	2600	0.9105	0.9145	0.9160	0.9161
17x17B	2600	0.9345	0.9358	0.9371	0.9356
17X17C	2600	0.9417	0.9431	0.9437	0.9430

HOLTEC INTERNATIONAL COPYRIGHTED MATERIAL

Table 6.4.11

MAXIMUM k_{eff} VALUES WITH FILLED AND VOIDED GUIDE TUBES FOR THE MPC-32 AT 4.1 wt% ENRICHMENT

Fuel Class	Minimum Soluble Boron Content (ppm)	MPC-32 @ 4.1 %			
		Guide Tubes Filled		Guide Tubes Voided	
		1.0 g/cm^3	0.93 g/cm^3	1.0 g/cm^3	0.93 g/cm^3
14x14A	1300	0.9041	0.9029	0.8954	0.8939
14x14B	1300	0.9257	0.9205	0.9128	0.9074
14x14C	1300	0.9402	0.9384	0.9423	0.9365
14x14D	1300	0.8970	0.8943	0.8836	0.8788
~~14x14E~~	~~1300~~	~~0.7340~~	~~0.7204~~	~~n/a~~	~~n/a~~
15x15A	1800	0.9199	0.9206	0.9193	0.9134
15x15B	1800	0.9397	0.9387	0.9385	0.9347
15x15C	1800	0.9266	0.9250	0.9264	0.9236
15x15D	1900	0.9375	0.9384	0.9380	0.9329
15x15E	1900	0.9348	0.9340	0.9365	0.9336
15x15F	1900	0.9411	0.9392	0.9400	0.9352
15x15G	1800	0.9147	0.9128	0.9125	0.9062
15X15H	1900	0.9267	0.9274	0.9276	0.9268
16X16A	1300	0.9468	0.9425	0.9433	0.9384
17x17A	1900	0.9105	0.9111	0.9106	0.9091
17x17B	1900	0.9309	0.9307	0.9297	0.9243
17X17C	1900	0.9355	0.9347	0.9350	0.9308

HOLTEC INTERNATIONAL COPYRIGHTED MATERIAL

Table 6.4.14

BOUNDING MAXIMUM k_{eff} VALUES FOR THE MPC-32 AND MPC-32F WITH UP TO 8 DFCs UNDER VARIOUS MODERATION CONDITIONS.

Fuel Assembly Class of Intact Fuel	**Initial Enrichment (wt% ^{235}U)**	**Minimum Soluble Boron Content (ppm)**	**Maximum k_{eff}**			
			Filled Guide Tubes		**Voided Guide Tubes**	
			1.0 g/cm^3	**0.93 g/cm^3**	**1.0 g/cm^3**	**0.93 g/cm^3**
14x14A through 14x14*D*~~E~~	4.1	1500	0.9277	0.9283	0.9336	0.9298
	5.0	2300	0.9139	0.9180	0.9269	0.9262
15x15A, B, C, G	4.1	1900	0.9345	0.9350	0.9350	0.9326
	5.0	2700	0.9307	0.9346	0.9347	0.9365
15x15D, E, F, H	4.1	2100	0.9322	0.9336	0.9340	0.9329
	5.0	2900	0.9342	0.9375	0.9385	0.9397
16x16A	4.1	1500	0.9322	0.9321	0.9335	0.9302
	5.0	2300	0.9198	0.9239	0.9289	0.9267
17x17A, B, C	4.1	2100	0.9284	0.9290	0.9294	0.9285
	5.0	2900	0.9308	0.9338	0.9355	0.9367

HOLTEC INTERNATIONAL COPYRIGHTED MATERIAL

Table 6.C.1 (continued)
CALCULATIONAL SUMMARY FOR ALL CANDIDATE FUEL TYPES
AND BASKET CONFIGURATIONS

MPC-32, 4.5% Enrichment, Bounding Cases					
Fuel Assembly Designation	***Cask***	***Maximum k_{eff}***	***Calculated k_{eff}***	***Std. Dev. (1-sigma)***	***EALF (eV)***
14x14E02	*HI-STAR*	*0.8770*	*0.8729*	*0.0007*	*0.4364*

Note: Maximum k_{eff} = Calculated k_{eff} + $K_c \times \sigma_c$ + Bias + σ_B
where:

K_c = 2.0
σ_c = Std. Dev. (1-sigma)
Bias = 0.0021
σ_B = 0.0006

See Subsection 6.4.3 for further explanation.

SUPPLEMENT 6.II

CRITICALITY EVALUATION OF INDIAN POINT 1 FUEL IN THE MPC-32

6.II.0 INTRODUCTION

This supplement is focused on providing additional criticality evaluations for Indian Point Unit 1 fuel (Array class 14x14E) in the MPC-32. The evaluation presented herein supplements those evaluations contained in the main body of Chapter 6 of this FSAR, and information in the main body of Chapter 6 is not repeated in this supplement. To aid the reader, the sections in this supplement are numbered in the same fashion as the corresponding sections in the main body of this chapter, i.e., Sections 6.II.1 through 6.II.6 correspond to Sections 6.1 through 6.6. Tables and figures in this supplement are labeled sequentially.

6.II.1 DISCUSSION AND RESULTS

Indian Point Unit 1 (IP1) is a nuclear power plant that was shut down in 1974. IP1 used a unique fuel assembly type identified as assembly class 14x14E in the main body of this chapter. IP1 fuel assemblies are currently stored in the IP1 spent fuel pool and need to be transferred into dry storage. The spent fuel pool at IP1 does normally not contain any soluble boron, and, while the assemblies are considered technically intact, they might not meet the requirements of intact fuel as defined in Chapter 1 of this FSAR. Specifically, records available for these assemblies are not sufficient to show that fuel assemblies have no cladding failures larger than pinhole leaks or hairline cracks, and further leakage tests of these assemblies might not be conclusive due to the age and low burnup of these assemblies. Therefore, all IP1 assemblies are required to be stored in DFCs. To qualify IP1 assemblies for dry storage in the MPC-32, this supplement therefore evaluates the following conditions:

> *Assembly class 14x14E in the MPC-32 filled with pure unborated water, with intact assemblies, or assumed damaged assemblies in any location. Intact assemblies are not modeled in DFCs, while damaged assemblies are modeled in DFCs.*

Results of the evaluations are summarized in Table 6.II.1 below, for intact assemblies, and for a bounding condition where all basket locations are filled with damaged fuel. The results demonstrate that the effective multiplication factor (k_{eff}) of the HI-STORM 100 System under the bounding conditions for IP1 fuel, including all biases and uncertainties evaluated with a 95% probability at the 95% confidence level, does not exceed 0.95 under all credible conditions.

6.II.2 SPENT FUEL LOADING

Calculations in this supplement are only performed for assembly class 14x14E, as characterized in the main part of this chapter in Section 6.2. Note that the calculations in this supplement are performed with an enrichment of 4.5 wt% ^{235}U, which bounds the enrichment of the actual fuel to

HOLTEC INTERNATIONAL COPYRIGHTED MATERIAL

be loaded, instead of the maximum value of 5 wt% ^{235}U used in the main part of this chapter. This is reflected in the definition of the authorized contents in Chapter 2.

6.II.3 MODEL SPECIFICATION

Calculations in this supplement are only performed for the MPC-32, using the conservative modeling assumptions described in the main part of this chapter in Section 6.3. Calculations are performed with assemblies centered in each cell, and for an eccentric condition where all assemblies are moved towards the center of the basket. Note that the active length of the fuel is conservatively assumed to be 150 inches, while the actual active fuel length is only 102 inches. The same assumption is made in the main part of this chapter for this assembly class (see Table 6.2.10). The DFCs contain outer spacers to minimize lateral movement of the DFCs in the cells. While these spacers are ½ inch thick, they are modeled as 3/8 inch for calculations with DFCs and eccentric positioning. This is conservative since it places fuel closer to each other in the center of the basket for this eccentric fuel positioning. Additionally, for the eccentric positioning, it is assumed that the content of the DFC is moved closest to the center of the basket. A single basket cell showing this condition is depicted in Figure 6.II.1. For the details on the modeling assumptions for the damaged fuel inside the DFC see the discussion in the following Section 6.II.4. This section also lists the detailed results of the calculations.

Note that all calculations in this supplement are performed for the HI-STAR overpack under fully flooded conditions. This bounds the HI-STORM storage condition, and is statistically equivalent to the condition in the HI-TRAC, as discussed in the main part of this chapter.

6.II.4 CRITICALITY CALCULATIONS

6.II.4.1 Intact Assemblies

The calculations for intact assemblies are identical to the calculations in the main part of this chapter, except that the borated water is replaced by pure water. Results of the calculations are listed in Table 6.II.2 for centered and eccentric conditions. As expected, based on the evaluations presented in the main part of this Chapter in Section 6.3, the eccentric position results in the higher reactivity. Nevertheless, all maximum k_{eff} values are below the regulatory limit by a substantial margin.

6.II.4.2 Damaged Assemblies

IP1 fuel assemblies have a stainless steel shroud/channel that surround all fuel rods, similar to BWR assemblies, although for the IP1 assembly this channel is perforated. The grid straps are apparently connected to the inside of this channel. The channel and grid straps therefore form the support structure for the assembly. In case of any damage to fuel rods, the broken rods would therefore be predominantly confined to the inside of this channel. Note that the fuel

HOLTEC INTERNATIONAL COPYRIGHTED MATERIAL

cladding of the IP1 fuel is also made from stainless steel, which has a much higher resistance to damage than the zirconium alloys used in other fuel types. Cladding damage to IP1 fuel is therefore much less likely. Nevertheless, cladding damage is conservatively assumed to occur. Local damage to individual rods would merely create slight relocation of rods within the rod array, which would have little if any effect on reactivity. More extensive damage, however, could result in the relocation of fuel rods within the assembly, i.e. create areas with reduced and increased numbers of rods within the assembly. This would have an effect on the local fuel-to-water ratio, which can significantly affect reactivity since intact PWR fuel assemblies are under-moderated, i.e. removing rods increases reactivity. To evaluate the reactivity effect of removing each individual fuel rod would be highly impractical. Instead, the damaged fuel approach models different array sizes of rods within the assembly, where each array size has a pitch so that it fills the inside of the channel. A total of 7 arrays, from 9x9 to 15x15 fuel rods are evaluated. Note that the outer dimension of the rod array is taken as the outside dimension of the channel around the rods, and the channel itself is neglected. This is conservative since it increases the area occupied by fuel and neglects steel which would provide some additional neutron absorption. Figure 6.II.1 shows the calculational model for a 12x12 array of rods. The results are shown in Table 6.II.3. In all cases, the condition is assumed to exist in all 32 assemblies of the MPC, and along the entire active length. As expected, an optimum moderation condition exists. This condition corresponds to a 12x12 array. For this condition, the reactivity is higher than for the intact assembly. However, even in this conservative and practically non-credible condition, the maximum k_{eff} is well below the regulatory limit by a substantial margin. Note that since the model assumes the cladding to remain in the fuel channel, it does not bound fuel debris. Fuel debris is therefore not qualified for the 14x14E in the MPC-32.

6.II.5 CRITICALITY BENCHMARKS

Fuel, fuel conditions, basket design and moderation conditions are bounded by the corresponding conditions in the main body of Chapter 6. The benchmark calculations in the main body are therefore directly applicable to the calculations performed in this supplement.

6.II.6 REGULATORY COMPLIANCE

In summary, the evaluation presented in this supplement demonstrate that the HI-STORM 100 System is in full compliance with the criticality requirements of 10CFR72 and consistent with NUREG-1536.

HOLTEC INTERNATIONAL COPYRIGHTED MATERIAL

Table 6.II.1

BOUNDING MAXIMUM k_{eff} VALUES FOR ASSEMBLY CLASS 14x14E IN THE MPC-32 WITHOUT SOLUBLE BORON

Fuel Condition	***Maximum Allowable Enrichment (wt% ^{235}U)***	***Maximum† k_{eff}***
Intact	*4.5*	*0.8770*
Damaged	*4.5*	*0.9181*

† The term "maximum k_{eff}" as used here, and elsewhere in this document, means the highest possible k-effective, including bias, uncertainties, and calculational statistics, evaluated for the worst case combination of manufacturing tolerances.

Table 6.II.2

MAXIMUM k_{eff} VALUES FOR ASSEMBLY CLASS 14x14E IN THE MPC-32 WITHOUT SOLUBLE BORON FOR INTACT ASSEMBLIES

Fuel Location	***Maximum Allowable Enrichment (wt% ^{235}U)***	***Maximum† k_{eff}***
Cell Centered	*4.5*	*0.8410*
Eccentric location, moved towards basket center	*4.5*	*0.8770*

† The term "maximum k_{eff}" as used here, and elsewhere in this document, means the highest possible k-effective, including bias, uncertainties, and calculational statistics, evaluated for the worst case combination of manufacturing tolerances.

HOLTEC INTERNATIONAL COPYRIGHTED MATERIAL

Table 6.II.3

MAXIMUM k_{eff} VALUES FOR ASSEMBLY CLASS 14x14E IN THE MPC-32 WITHOUT SOLUBLE BORON FOR ROD ARRAYS SIMULATING DAMAGED FUEL ASSEMBLIES

Rod Array	***Maximum Allowable Enrichment (wt% ^{235}U)***	***Maximum† k_{eff}***	
		Cell Centered	*Eccentric*
9x9	*4.5*	*0.8381*	*0.8587*
10x10	*4.5*	*0.8722*	*0.8971*
11x11	*4.5*	*0.8882*	*0.9160*
12x12	*4.5*	*0.8906*	*0.9181*
13x13	*4.5*	*0.8808*	*0.9079*
14x14	*4.5*	*0.8615*	*0.8894*
15x15	*4.5*	*0.8335*	*0.8627*

† The term "maximum k_{eff}" as used here, and elsewhere in this document, means the highest possible k-effective, including bias, uncertainties, and calculational statistics, evaluated for the worst case combination of manufacturing tolerances.

HOLTEC INTERNATIONAL COPYRIGHTED MATERIAL

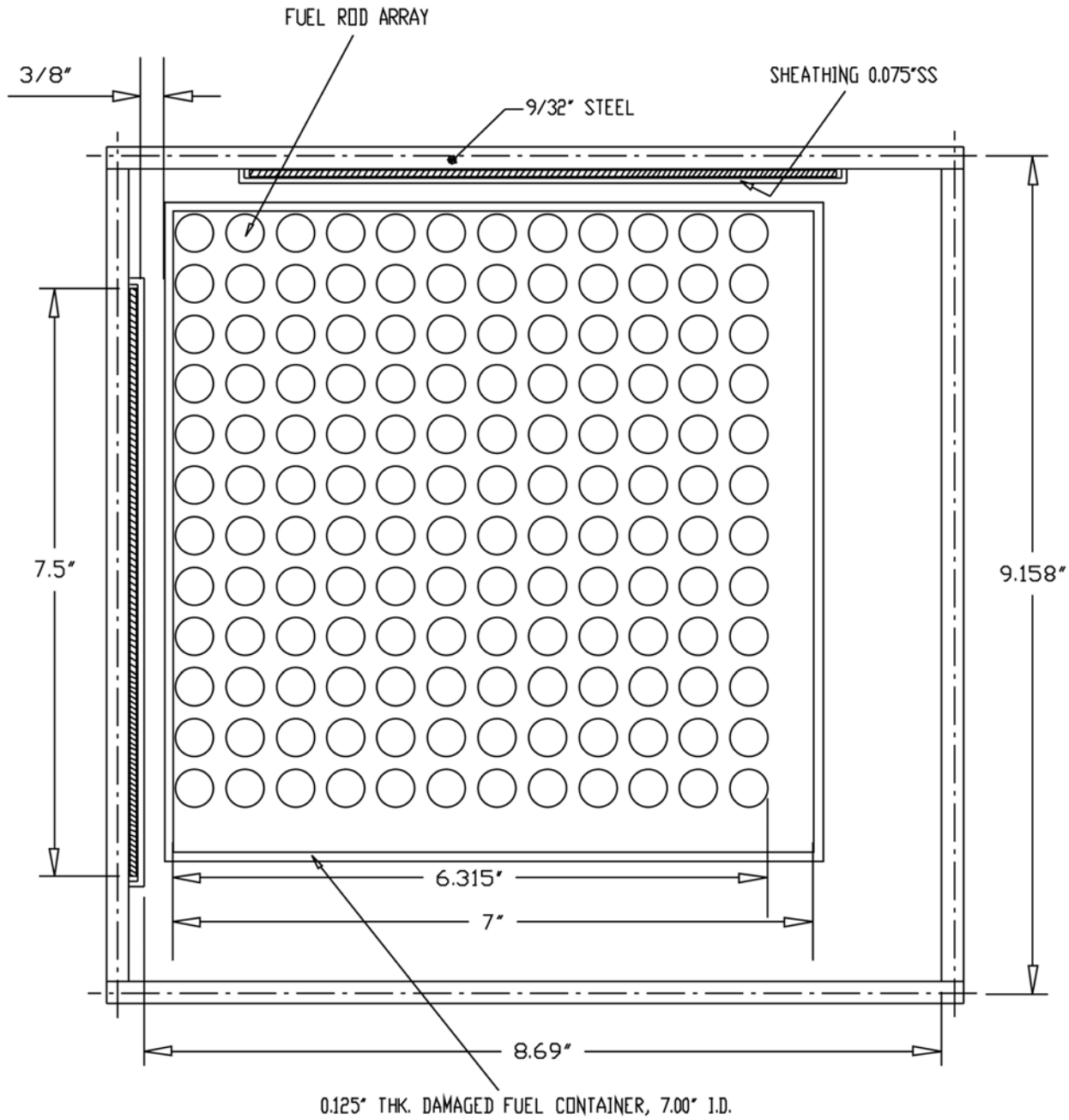

FIGURE 6.11.1; DAMAGED FUEL/FUEL DEBRIS CALCULATION MODEL (PLANAR CROSS-SECTION) WITH BARE FUEL RODS IN THE MPC-32 BASKET FOR IP1 FUEL
(SEE CHAPTER 1 FOR TRUE BASKET DIMENSIONS)

SUPPLEMENT 7.II

CONFINEMENT

The main body of this chapter remains fully applicable for the IP1 specific options of the HI-STORM 100 System.

CHAPTER 8: OPERATING PROCEDURES†

8.0 INTRODUCTION:

This chapter outlines the loading, unloading, and recovery procedures for the HI-STORM 100 System for storage operations. The procedures provided in this chapter are prescriptive to the extent that they provide the basis and general guidance for plant personnel in preparing detailed, written, site-specific, loading, handling, storage and unloading procedures. Users may add, modify the sequence of, perform in parallel, or delete steps as necessary provided that the intent of this guidance is met and the requirements of the CoC are met. The information provided in this chapter meets all requirements of NUREG-1536 [8.0.1].

Section 8.1 provides the guidance for loading the HI-STORM 100 System in the spent fuel pool. Section 8.2 provides the procedures for ISFSI operations and general guidance for performing maintenance and responding to abnormal events. Responses to abnormal events that may occur during normal loading operations are provided with the procedure steps. Section 8.3 provides the procedure for unloading the HI-STORM 100 System in the spent fuel pool. Section 8.4 provides the guidance for MPC transfer to the HI-STAR 100 Overpack for transport or storage. Section 8.4 can also be used for recovery of a breached MPC for transport or storage. Section 8.5 provides the guidance for transfer of the MPC into HI-STORM from the HI-STAR 100 transport overpack. Equipment specific operating details such as Vacuum Drying System, valve manipulation and Transporter operation are not within the scope of this FSAR and will be provided to users based on the specific equipment selected by the users and the configuration of the site.

The procedures contained herein describe acceptable methods for performing HI-STORM 100 loading and unloading operations. Unless otherwise stated, references to the HI-STORM 100 apply equally to the HI-STORM 100, 100S and 100S Version B. Users may alter these procedures to allow alternate methods and operations to be performed in parallel or out of sequence as long as the general intent of the procedure is met. In the figures following each section, acceptable configurations of rigging, piping, and instrumentation are shown. In some cases, the figures are artist's renditions. Users may select alternate configurations, equipment and methodology to accommodate their specific needs provided that the intent of this guidance is met and the requirements of the CoC are met. All rigging should be approved by the user's load handling authority prior to use. User-developed procedures and the design and operation of any alternate equipment must be reviewed by the Certificate holder prior to implementation.

Licensees (Users) will utilize the procedures provided in this chapter, equipment-specific operating instructions, and plant working procedures and apply them to develop the site specific written, loading and unloading procedures.

The loading and unloading procedures in Section 8.1 and 8.3 can also be appropriately revised

† This chapter has been prepared in the format and section organization set forth in Regulatory Guide 3.61. However, the material content of this chapter also fulfills the requirements of NUREG 1536. Pagination and numbering of sections, figures, and tables are consistent with the convention set down in Chapter 1, Section 1.0, herein. Finally, all terms-of-art used in this chapter are consistent with the terminology of the glossary (Table 1.0.1) and component nomenclature of the Bill-of-Materials (Section 1.5).

HOLTEC INTERNATIONAL COPYRIGHTED MATERIAL

into written site-specific procedures to allow dry loading and unloading of the system in a hot cell or other remote handling facility. The Dry Transfer Facility (DTF) loading and unloading procedures are essentially the same with respect to loading removing moisture, and inerting, of the MPC. The dry transfer facility shall develop the appropriate site-specific procedures as part of the DTF facility license.

Tables 8.1.1 through 8.1.4 provide the handling weights for each of the HI-STORM 100 System major components and the loads to be lifted during various phases of the operation of the HI-STORM 100 System. Users shall take appropriate actions to ensure that the lift weights do not exceed user-supplied lifting equipment rated loads. Table 8.1.5 provides the HI-STORM 100 System bolt torque and sequencing requirements. Table 8.1.6 provides an operational description of the HI-STORM 100 System ancillary equipment along with its safety designation, where applicable. Fuel assembly selection and verification shall be performed by the licensee in accordance with written, approved procedures which ensure that only SNF assemblies authorized in the Certificate of Compliance and as defined in Section 2.1.9 are loaded into the HI-STORM 100 System.

In addition to the requirements set forth in the CoC, users will be required to develop or modify existing programs and procedures to account for the operation of an ISFSI. Written procedures will be required to be developed or modified to account for such things as nondestructive examination (NDE) of the MPC welds, handling and storage of items and components identified as Important to Safety, 10CFR72.48 [8.1.1] programs, specialized instrument calibration, special nuclear material accountability at the ISFSI, security modifications, fuel handling procedures, training and emergency response, equipment and process qualifications. Users are required to take necessary actions to prevent boiling of the water in the MPC. This may be accomplished by performing a site-specific analysis to identify a time limitation to ensure that water boiling will not occur in the MPC prior to the initiation of draining operations. Chapter 4 of the FSAR provides some sample time limits for the time to initiation of draining for various spent fuel pool water temperatures using design basis heat loads. Users are also required to take necessary actions to prevent the fuel cladding from exceeding temperature limits during drying operations and during handling of the MPC in the HI-TRAC transfer cask. Section 4.5 of the FSAR provides requirements on the necessary actions, if any, based on the heat load of the MPC.

Table 8.1.7 summarizes some of the instrumentation used to load and unload the HI-STORM 100 System. Tables 8.1.8, 8.1.9, and 8.1.10 provide sample receipt inspection checklists for the HI-STORM 100 overpack, the MPC, and the HI-TRAC Transfer Cask, respectively. Users may develop site-specific receipt inspection checklists, as required for their equipment. Fuel handling, including the handling of fuel assemblies in the Damaged Fuel Container (DFC) shall be performed in accordance with written site-specific procedures. ~~DFCs shall be loaded in the spent fuel pool racks prior to placement into the MPC.~~

HOLTEC INTERNATIONAL COPYRIGHTED MATERIAL

Technical and Safety Basis for Loading and Unloading Procedures

The procedures herein are developed for the loading, storage, unloading, and recovery of spent fuel in the HI-STORM 100 System. The activities involved in loading of spent fuel in a canister system, if not carefully performed, may present risks. The design of the HI-STORM 100 System, including these procedures, the ancillary equipment and the Technical Specifications, serve to minimize risks and mitigate consequences of potential events. To summarize, consideration is given in the loading and unloading systems and procedures to the potential events listed in Table 8.0.1.

The primary objective is to reduce the risk of occurrence and/or to mitigate the consequences of the event. The procedures contain Notes, Warnings, and Cautions to notify the operators to upcoming situations and provide additional information as needed. The Notes, Warnings and Cautions are purposely bolded and boxed and immediately precede the applicable steps.

In the event of an extreme abnormal condition (e.g., cask drop or tip-over event) the user shall have appropriate procedural guidance to respond to the situation. As a minimum, the procedures shall address establishing emergency action levels, implementation of emergency action program, establishment of personnel exclusions zones, monitoring of radiological conditions, actions to mitigate or prevent the release of radioactive materials, and recovery planning and execution and reporting to the appropriate regulatory agencies, as required.

HOLTEC INTERNATIONAL COPYRIGHTED MATERIAL

Table 8.0.1
OPERATIONAL CONSIDERATIONS

POTENTIAL EVENTS	METHODS USED TO ADDRESS EVENT	COMMENTS/ REFERENCES
Cask Drop During Handling Operations	Cask lifting and handling equipment is designed to ANSI N14.6. Procedural guidance is given for cask handling, inspection of lifting equipment, and proper engagement to the trunnions.	See Section 8.1.2.
Cask Tip-Over Prior to welding of the MPC lid	The Lid Retention System is available to secure the MPC lid during movement between the spent fuel pool and the cask preparation area.	See Section 8.1.5. See Figure 8.1.15.
Contamination of the MPC external shell	The annulus seal, pool lid, and Annulus Overpressure System minimize the potential for the MPC external shell to become contaminated from contact with the spent fuel pool water.	See Figures 8.1.13 and 8.1.14.
Contamination spread from cask process system exhausts	Processing systems are equipped with exhausts that can be directed to the plant's processing systems.	See Figures 8.1.19-8.1.22.
Damage to fuel assembly cladding from oxidation	Fuel assemblies are never subjected to air or oxygen during loading and unloading operations.	See Section 8.1.5, and Section 8.3.3
Damage to Vacuum Drying System vacuum gauges from positive pressure	Vacuum Drying System is separate from pressurized gas and water systems.	See Figure 8.1.22 and 8.1.23.
Ignition of combustible mixtures of gas (e.g., hydrogen) during MPC lid welding or cutting	The area around MPC lid shall be appropriately monitored for combustible gases prior to, and during welding or cutting activities. The space below the MPC lid shall be evacuated or purged prior to, and during these activities.	See Section 8.1.5 and Section 8.3.3.

HOLTEC INTERNATIONAL COPYRIGHTED MATERIAL

Table 8.0.1
OPERATIONAL CONSIDERATIONS
(CONTINUED)

POTENTIAL EVENTS	METHODS USED TO ADDRESS EVENT	COMMENTS/ REFERENCES
Excess dose from failed fuel assemblies	MPC gas sampling allows operators to determine the integrity of the fuel cladding prior to opening the MPC. This allows preparation and planning for failed fuel. The RVOAs allow the vent and drain ports to be operated like valves and prevent the need to hot tap into the penetrations during unloading operation.	See Figure 8.1.16 and Section 8.3.3.
Excess dose to operators	The procedures provide ALARA Notes and Warnings when radiological conditions may change.	See ALARA Notes and Warnings throughout the procedures.
Excess generation of radioactive waste	The HI-STORM system uses process systems that minimize the amount of radioactive waste generated. Such features include smooth surfaces for ease of decontamination efforts, prevention of avoidable contamination, and procedural guidance to reduce decontamination requirements. Where possible, items are installed by hand and require no tools.	Examples: HI-TRAC bottom protective cover, bolt plugs in empty holes, pre-wetting of components.
Fuel assembly misloading event	Procedural guidance is given to perform assembly selection verification and a post-loading visual verification of assembly identification prior to installation of the MPC lid.	See Section 8.1.4.
Incomplete moisture removal from MPC	The vacuum drying process reduces the MPC pressure in stages to prevent the formation of ice. Vacuum is held below 3 torr for 30 minutes with the vacuum pump isolated to assure dryness. If the forced helium dehydration process used, the temperature of the gas exiting the demoisturizer is held below 21 ^{o}F for a minimum of 30 minutes. The TS require the surveillance requirement for moisture removal to be met before entering transport operations	See Section 8.1.5

HOLTEC INTERNATIONAL COPYRIGHTED MATERIAL

Table 8.0.1
OPERATIONAL CONSIDERATIONS
(CONTINUED)

POTENTIAL EVENTS	METHODS USED TO ADDRESS EVENT	COMMENTS/ REFERENCES
Incorrect MPC lid installation	Procedural guidance is given to visually verify correct MPC lid installation prior to HI-TRAC removal from the spent fuel pool.	See Section 8.1.5.
Load Drop	Rigging diagrams and procedural guidance are provided for all lifts. Component weights are provided in Tables 8.1.1 through 8.1.4.	See Figures 8.1.6, 8.1.7, 8.1.9, 8.1.25 and 8.1.27. See Tables 8.1.1 through 8.1.4.
Over-pressurization of MPC during loading and unloading	Pressure relief valves in the water and gas processing systems limit the MPC pressure to acceptable levels.	See Figures 8.1.20, 8.1.21, 8.1.23 and 8.3.4.
Overstressing MPC lift lugs from side loading	The MPC is upended using the upending frame.	See Figure 8.1.6 and Section 8.1.2.
Overweight cask lift	Procedural guidance is given to alert operators to potential overweight lifts.	See Section 8.1.7 for example. See Tables 8.1.1 through 8.1.4.
Personnel contamination by cutting/grinding activities	Procedural guidance is given to warn operators prior to cutting or grinding activities.	See Section 8.1.5 and Section 8.3.3.
Transfer cask carrying hot particles out of the spent fuel pool	Procedural guidance is given to scan the transfer cask prior to removal from the spent fuel pool.	See Section 8.1.3 and Section 8.1.5.
Unplanned or uncontrolled release of radioactive materials	The MPC vent and drain ports are equipped with metal-to-metal seals to minimize the leakage during moisture removal and helium backfill operations. Unlike elastomer seals, the metal seals resist degradation due to temperature and radiation and allow future access to the MPC ports without hot tapping. The RVOAs allow the port to be opened and closed like a valve so gas sampling may be performed.	See Figure 8.1.11 and 8.1.16. See Section 8.3.3.

HOLTEC INTERNATIONAL COPYRIGHTED MATERIAL

SUPPLEMENT 8.II

OPERATING PROCEDURES

The main body of this chapter remains fully applicable for the IP1 specific options of the HI-STORM 100 System.

HOLTEC INTERNATIONAL COPYRIGHTED MATERIAL

SUPPLEMENT 9.II

ACCEPTANCE CRITERIA AND MAINTENANCE PROGRAM

The main body of this chapter remains fully applicable for the IP1 specific options of the HI-STORM 100 System.

SUPPLEMENT 10.II

RADIATION PROTECTION

The HI-STORM 100 System has been expanded to include options specific for Indian Point Unit 1 (IP1). Supplement 5.II demonstrates that the dose rates from the HI-STORM 100 System for IP1, including the shorter HI-STORM 100S Version B overpack (HI-STORM 100S (185)) and the HI-TRAC 100D Version IP1, are bounded by the dose rates from the HI-STORM 100 System with design basis PWR fuel. Therefore, the off-site dose rates from the HI-STORM 100S Version B and HI-TRAC 100D Version IP1 containing IP1 fuel is bounded by the analysis in the main part of this chapter.

The IP1 specific options in the HI-STORM 100 System do not affect the operational sequence. Therefore, the estimated operational dose rates in the main body of the chapter are bounding. The actual dose rate from loading IP1 fuel will be considerably less due to the low burnup and long cooling time of the IP1 fuel.

HOLTEC INTERNATIONAL COPYRIGHTED MATERIAL

The structural evaluation of the MPC presented in Section 3.4 demonstrates that under a 45g loading the stresses are well within the allowable values. Analysis presented in Chapter 3 shows that the concrete shields attached to the underside and top of the overpack lid remains attached. As a result of the tip-over accident there will be localized crushing of the concrete in the area of impact.

Thermal

The thermal analysis of the overpack and MPC is based on vertical storage. The thermal consequences of this accident while the overpack is in the horizontal orientation are bounded by the burial under debris accident evaluated in Subsection 11.2.14. Damage to the overpack will be limited as discussed above. As the structural analysis demonstrates that there is no significant change in the MPC or overpack, once the overpack and MPC are returned to their vertical orientation there is no effect on the thermal performance of the system.

Shielding

The effect on the shielding performance of the system as a result of this event is *two-fold. First, there may be* ~~limited to~~ a localized decrease in the shielding thickness of the concrete *in the body of the overpack. Second, the bottom of the overpack, which is normally facing the ground and not accessible, will now be facing the horizon. This orientation will increase the off-site dose rate. However, the dose rate limits of 10CFR72.106 are not exceeded.*

Criticality

There is no effect on the criticality control features of the system as a result of this event.

Confinement

There is no effect on the confinement function of the MPC as a result of this event. As discussed in the structural evaluation above, all stresses remain within allowable values, assuring confinement boundary integrity.

Radiation Protection

There is no effect on occupational or public exposures from radionuclide release as a result of this accident event since the confinement boundary integrity of the MPC remains intact.

Immediately after the tip-over accident a radiological inspection of the HI-STORM will be performed and temporary shielding shall be installed to limit exposure from direct radiation. Based on a minimum distance to the controlled area boundary of 100 meters, the 10CFR72.106 dose rate requirements at the controlled area boundary (5 Rem limit) are not exceeded.

~~Since there is a very localized reduction in shielding and no effect on the confinement capabilities as discussed above, there is no effect on occupational or public exposures as a result of this accident event.~~

Based on this evaluation, it is concluded that the accident ~~pressure~~ does not affect the safe operation of the HI-STORM 100 System.

11.2.3.3 Tip-Over Dose Calculations

The analysis of the tip-over accident has shown that the MPC confinement barrier will not be compromised and, therefore, there will be no release of radioactivity or increase in site-boundary dose rates from release of radioactivity.

The tip-over accident could cause localized damage to the radial concrete shield and outer steel shell where the overpack impacts the surface. The overpack surface dose rate in the affected area could increase due to the damage. However, there should be no noticeable increase in the ISFSI site or boundary dose rate *as a result of the localized damage on the side of the overpack.* ~~, because the affected areas will be small and localized. The analysis of the tip-over accident has shown that the MPC confinement barrier will not be compromised and, therefore, there will be no release of radioactivity or increase in site-boundary dose rates.~~

The tip-over accident will also cause a re-orientation of the bottom of the overpack. As a result, radiation leaving the bottom of the overpack, which would normally be directed into the ISFSI pad, will be directed towards the horizon and the controlled area boundary. The dose rate at 100 meters from the bottom of the overpack, the minimum distance to the controlled area boundary, was calculated for the HI-STORM 100S Version B with an MPC-24 for assumed accident duration of 30 days. The burnup and cooling time of the fuel was 60,000 MWD/MTU and 3 years, which is more conservative than the off-site dose analysis reported in Chapter 10, Table 10.4.1 and the burnup and cooling time used in Chapter 5 for off-site dose calculations. The results presented below demonstrate that the regulatory requirements of 10CFR72.106 are easily met.

Distance	*Dose Rate (mrem/hr)*	*Accident Duration*	*Total Dose (mrem)*	*10CFR72.106 Limit (mrem)*
100 meters	*2.36*	*720 hours or 30 days*	*1699.2*	*5000*

11.2.3.4 Tip-Over Accident Corrective Action

Following a tip-over accident, the ISFSI operator shall first perform a radiological and visual inspection to determine the extent of the damage to the overpack. Special handling procedures, *including the use of temporary shielding,* will be developed and approved by the ISFSI operator.

SUPPLEMENT 11.II

OFF-NORMAL AND ACCIDENT EVALUATION FOR HI-STORM 100S-185

11.II.0 INTRODUCTION

This supplement is focused on the off-normal and accident condition evaluations of the HI-STORM 100S-185 System for storage of IP1 fuel. The evaluations described herein parallel those of the HI-STORM 100 System contained in the main body of Chapter 11 of this FSAR. To ensure readability, the sections in this supplement are numbered to be directly analogous to the sections in the main body of the chapter. For example, the fire accident evaluation presented in Supplement Subsection 11.II.2.4 for the HI-STORM 100S-185 is analogous to the evaluation presented in Subsection 11.2.4 of the main body of Chapter 11 for the HI-STORM 100.

11.II.1 OFF-NORMAL EVENTS

A general discussion of off-normal events is presented in Section 11.1 of the main body of Chapter 11. The following off-normal events are discussed in this supplement:

Off-Normal Pressure
Off-Normal Environmental Temperature
Leakage of One MPC Seal Weld
Partial Blockage of Air Inlets
Off-Normal Handling of HI-TRAC Transfer Cask
FHD System Failure

The results of the evaluations presented herein demonstrate that the HI-STORM 100S-185 System can withstand the effects of off-normal events without affecting its ability to perform its intended function, and is in compliance with the applicable acceptance criteria.

11.II.1.1 Off-Normal Pressure

A discussion of this off-normal condition is presented in Subsection 11.1.1 of the main body of Chapter 11. A description of the cause of, detection of, corrective actions for and radiological impact of this event is presented therein.

Structural

The structural evaluation of the MPC enclosure vessel for off-normal internal pressure conditions is discussed in Section 3.4. The applicable pressure boundary stress limits are confirmed to bound the stresses resulting from the off-normal pressure.

HOLTEC INTERNATIONAL COPYRIGHTED MATERIAL

Thermal

The off-normal event is evaluated for the generic HI-STORM in Section 4.6.1 This evaluation is bounding as the MPC temperatures and pressures in a HI-STORM 100S-185 are bounded by the generic HI-STORM System.

Shielding

There is no effect on the shielding performance of the system as a result of this off-normal event.

Criticality

There is no effect on the criticality control features of the system as a result of this off-normal event.

Confinement

There is no effect on the confinement function of the MPC as a result of this off-normal event. As discussed in the structural evaluation mentioned above, all stresses remain within allowable values, assuring confinement boundary integrity.

Radiation Protection

Since there is no degradation in shielding or confinement capabilities as discussed above, there is no effect on occupational or public exposures as a result of this off-normal event.

Based on this evaluation, it is concluded that the off-normal pressure does not affect the safe operation of the HI-STORM 100S-185 System.

11.II.1.2 Off-Normal Environmental Temperatures

A discussion of this off-normal condition is presented in Subsection 11.1.2 of the main body of Chapter 11. A description of the cause of, detection of, corrective actions for and radiological impact of this event is presented therein.

Structural

The effect on the MPC for the upper off-normal thermal conditions (i.e., 100°F) is an increase in the internal pressure. The resultant pressure is below the off-normal design pressure (Table 2.2.1).

Thermal

The effect of off-normal ambient temperature on HI-STORM temperatures and pressures is evaluated in Section 4.II.6.

HOLTEC INTERNATIONAL COPYRIGHTED MATERIAL

Shielding

There is no effect on the shielding performance of the system as a result of this off-normal event.

Criticality

There is no effect on the criticality control features of the system as a result of this off-normal event.

Confinement

There is no effect on the confinement function of the MPC as a result of this off-normal event.

Radiation Protection

Since there is no degradation in shielding or confinement capabilities as discussed above, there is no effect on occupational or public exposures as a result of this off-normal event.

Based on this evaluation, it is concluded that the specified off-normal environmental temperatures do not affect the safe operation of the HI-STORM 100S-185 System.

11.II.1.3 Leakage of One MPC Seal Weld

A discussion of this off-normal condition is presented in Subsection 11.1.3 of the main body of Chapter 11. The discussion presented therein is applicable in its entirety to an MPC in a HI-STORM 100S-185.

11.II.1.4 Partial Blockage of Air Inlets

A discussion of this off-normal condition is presented in Subsection 11.1.4 of the main body of Chapter 11. A description of the cause of, detection of, corrective actions for and radiological impact of this event is presented therein.

Structural

There are no structural consequences as a result of this off-normal event.

Thermal

Partial air inlets blockage is evaluated in Section 4.II.6.

Shielding

There is no effect on the shielding performance of the system as a result of this off-normal event.

HOLTEC INTERNATIONAL COPYRIGHTED MATERIAL

Criticality

There is no effect on the criticality control features of the system as a result of this off-normal event.

Confinement

There is no effect on the confinement function of the MPC as a result of this off-normal event.

Radiation Protection

Since there is no degradation in shielding or confinement capabilities as discussed above, there is no effect on occupational or public exposures as a result of this off-normal event.

Based on this evaluation, it is concluded that the specified off-normal partial blockage of air inlet ducts event does not affect the safe operation of the HI-STORM 100S-185 System.

11.II.1.5 Off-Normal Handling of HI-TRAC

A discussion of this off-normal condition is presented in Subsection 11.1.5 of the main body of Chapter 11. This off-normal condition does not apply to the HI-TRAC 100D Version IP1, which does not have lower pocket trunnions. ~~Upending and downending of the HI-TRAC 100D Version IP1 is performed using an L-frame.~~

11.II.1.6 Failure of FHD System

A discussion of this off-normal condition is presented in Subsection 11.1.6 of the main body of Chapter 11. The discussion presented therein is also applicable to the IP1 cask system.

11.II.2 ACCIDENT EVENTS

A general discussion of accident events is presented in Section 11.1 of the main body of Chapter 11. The following accident events are discussed in this supplement section:

HI-TRAC Transfer Cask Handling Accident
HI-STORM 100S-185 Overpack Handling Accident
Tip-Over
Fire Accident
Partial Blockage of MPC Basket Vent Holes
Tornado
Flood
Earthquake
100% Fuel Rod Rupture
Confinement Boundary Leakage
Explosion
Lightning

HOLTEC INTERNATIONAL COPYRIGHTED MATERIAL

100% Blockage of Air Inlets
Burial Under Debris
Extreme Environmental Temperature

The results of the evaluations performed herein demonstrate that the HI-STORM 100S-185 System can withstand the effects of all credible and hypothetical accident conditions and natural phenomena without affecting safety function, and is in compliance with the applicable acceptance criteria.

11.II.2.1 HI-TRAC Transfer Cask Handling Accident

A discussion of this accident condition is presented in Subsection 11.2.1 of the main body of Chapter 11. The HI-TRAC 100D Version IP1 shall be transported and handled only in the vertical orientation using a device designed in accordance with ANSI N14.6 and having redundant drop protection features unless a site specific analysis has been performed to determine a vertical lift height limit. Horizontal lifting of a loaded HI-TRAC 100D Version IP1 is not permitted. Therefore, a drop of the loaded HI-TRAC 100D Version IP1 is not ~~a credible accident~~analyzed in this FSAR.

11.II.2.2 HI-STORM Overpack Handling Accident

A discussion of this accident condition is presented in Subsection 11.2.2~~1~~ of the main body of Chapter 11. The discussion presented therein applies to the HI-STORM 100S-185 System, except that the height of the loaded overpack above the ground shall be limited to below the vertical handling height limit determined in Supplement 3.II.

11.II.2.3 Tip-Over

A discussion of this accident condition is presented in Subsection 11.2.3~~1~~ of the main body of Chapter 11. The discussion presented therein applies to the HI-STORM 100S-185 System, except that the tip-over analysis of the HI-STORM 100S-185 overpack is provided in Supplement 3.II, Section 3.II.4.

11.II.2.4 Fire Accident

A discussion of this accident condition is presented in Subsection 11.2.4 of the main body of Chapter 11. A description of the cause of and corrective actions for this event is presented therein.

Structural

There are no structural consequences as a result of the fire accident condition.

HOLTEC INTERNATIONAL COPYRIGHTED MATERIAL

Thermal

Supplement 4.II, Section 4.II.6 evaluates fire accidents for the HI-STORM 100S-185 System. As justified therein, the evaluation of fires on a generic HI-STORM System presented in Section 11.2 bound the effects on the HI-STORM 100S-185 System.

Shielding

With respect to concrete damage from a fire to the HI-STORM 100S-185 System*, NUREG-1536 (4.0,V,5.b) states: "the loss of a small amount of shielding material is not expected to cause a storage system to exceed the regulatory requirements in 10 CFR 72.106 and, therefore, need not be estimated or evaluated in the SAR."*

For the HI-TRAC 100D Version IP1, the assumed loss of all the water in the water jacket results in an increase in the radiation dose rates at locations adjacent to the water jacket. The shielding evaluation presented in Supplement 5.II demonstrates that the requirements of 10CFR72.106 are not exceeded.

Criticality

There is no effect on the criticality control features of the system as a result of this accident event.

Confinement

There is no effect on the confinement function of the MPC as a result of this accident event.

Radiation Protection

Since there is a very localized reduction in shielding and no effect on the confinement capabilities as discussed above, there is no effect on occupational or public exposures as a result of this accident event.

Based on this evaluation, it is concluded that the fire accident does not affect the safe operation of the HI-STORM 100S-185 System.

For the HI-TRAC 100D Version IP1, there is no degradation in confinement capabilities of the MPC, as discussed above. There are increases in the local dose rates adjacent to the water jacket. Dose rates at 1 meter from the water jacket, after the water is lost, are presented in Supplement 5.II and it is concluded that dose rates at the 100 meter controlled boundary for the HI-TRAC 100D Version IP1 are bounded by the HI-TRAC 100. Immediately after the fire accident a radiological inspection of the HI-TRAC will be performed and temporary shielding shall be installed to limit the exposure to the public.

HOLTEC INTERNATIONAL COPYRIGHTED MATERIAL

11.II.2.5 Partial Blockage of MPC Basket Vent Holes

A discussion of this accident condition is presented in Subsection 11.2.5 of the main body of Chapter 11. The discussion presented therein applies to an MPC-32-IP1 in a HI-STORM 100S-185.

11.II.2.6 Tornado

A discussion of this accident condition is presented in Subsection 11.2.6 of the main body of Chapter 11. A description of the cause of and corrective actions for this event is presented therein.

Structural

Analyses presented in Supplement 3.II, Section 3.II.4 show that the impact of tornado and tornado borne missiles on the HI-STORM 100S-185 System does not result in tip-over or a direct missile strike on the MPC.

Thermal

There are no thermal consequences as a result of the tornado.

Shielding

A tornado missile may cause localized damage to the HI-STORM 100S 185 Overpack. As the overpack is heavily shielded, the overall damage consequences (site boundary doses) are insignificant.

A tornado missile may penetrate the HI-TRAC100D Version IP water jacket shell causing the loss of the neutron shielding (water) which results in an increase in dose rates adjacent to the water jacket. The shielding evaluation presented in Supplement 5.II demonstrates that the requirements of 10CFR72.106 are not exceeded.

Criticality

There is no effect on the criticality control features of the system as a result of this accident event.

Confinement

There is no effect on the confinement function of the MPC as a result of this accident event.

Radiation Protection

There is no degradation in confinement capabilities of the MPC, since the tornado missiles do not impact the MPC, as discussed above. A tornado missile may cause localized damage in the

HOLTEC INTERNATIONAL COPYRIGHTED MATERIAL

HI-STORM 100S 185 overpack. However, the damage will have a negligible effect on the site boundary dose. Based on this evaluation, it is concluded that the tornado accident does not affect the safe operation of the HI-STORM 100S-185 System.

A tornado missile may penetrate the HI-TRAC 100D Version IP1 water jacket shell causing the loss of the neutron shielding (water). There are increases in the local dose rates adjacent to the water jacket. Dose rates at 1 meter from the water jacket, after the water is lost, are presented in Supplement 5.II and it is concluded that dose rates at the 100 meter controlled boundary for the HI-TRAC 100D Version IP1 are bounded by the HI-TRAC 100. Immediately after the tornado missile accident a radiological inspection of the HI-TRAC shall be performed and temporary shielding shall be installed to limit exposure.

11.II.2.7 Flood

A discussion of this accident condition is presented in Subsection 11.2.7 of the main body of Chapter 11. A description of the cause of this event is presented therein.

Structural

The structural evaluation of the MPC for the accident condition external pressure (Table 2.2.1) is presented in Section 3.4 and the resulting stresses from this event are shown to be well within the allowable values.

Thermal

The thermal consequences of flood are bounded by the all inlet ducts blocked accident.

Shielding

There is no effect on the shielding performance of the system as a result of this accident event. The floodwater provides additional shielding which reduces radiation dose.

Criticality

There is no effect on the criticality control features of the system as a result of this accident event. The criticality analysis is unaffected because under the flooding condition water does not enter the MPC cavity and therefore the reactivity would be less than the loading condition in the spent fuel pool, which is presented in Section 6.1.

Confinement

There is no effect on the confinement function of the MPC as a result of this accident event. As discussed in the structural evaluation above, all stresses remain within allowable values, assuring confinement boundary integrity.

HOLTEC INTERNATIONAL COPYRIGHTED MATERIAL

Radiation Protection

Since there is no degradation in shielding or confinement capabilities as discussed above, there is no effect on occupational or public exposures as a result of this accident event.

Based on this evaluation, it is concluded that the flood accident does not affect the safe operation of the HI-STORM 100S-185 System.

Flood Accident Corrective Action

The HI-STORM 100S 185 System is unaffected by flood. Upon recession of floodwaters, exposed surfaces may need debris and adherent foreign matter removal.

11.II.2.8 Earthquake

A discussion of this accident condition is presented in Subsection 11.2.8 of the main body of Chapter 11. A description of the cause of and corrective actions for this event is presented therein.

Structural

An evaluation presented in Supplement 3.II, Section 3.II.4 shows that the HI-STORM 100S-185 does not tip over. It continues to render its intended function during and after the earthquake and the overpack is unaffected by the event.

Thermal

There is no effect on the thermal performance of the system as a result of this accident event.

Shielding

There is no effect on the shielding performance of the system as a result of this accident event.

Criticality

There is no effect on the criticality control features of the system as a result of this accident event.

Confinement

There is no effect on the confinement function of the MPC as a result of this accident event.

Radiation Protection

Since there is no degradation in shielding or confinement capabilities as discussed above, there is no effect on occupational or public exposures as a result of this accident event.

HOLTEC INTERNATIONAL COPYRIGHTED MATERIAL

Based on this evaluation, it is concluded that the earthquake does not affect the safe operation of the HI-STORM 100S-185 System.

11.II.2.9 100% Fuel Rod Rupture

A discussion of this accident condition is presented in Subsection 11.2.9 of the main body of Chapter 11. A description of the cause of and corrective actions for this event is presented therein.

Structural

The MPC accident pressure is below the design pressure of the MPC (Table 2.2.1).

Thermal

The 100% fuel rods rupture accident pressure is evaluated in Supplement II, Section 4.II.4.4. The MPC accident pressure is below the vessel design pressure (Table 2.2.1).

Shielding

There is no effect on the shielding performance of the system as a result of this accident event.

Criticality

There is no effect on the criticality control features of the system as a result of this accident event.

Confinement

There is no effect on the confinement function of the MPC as a result of this accident event. As discussed in the structural evaluation above, all stresses remain within allowable values, assuring confinement boundary integrity.
Radiation Protection

Since there is no degradation in shielding or confinement capabilities as discussed above, there is no effect on occupational or public exposures as a result of this accident event.

Based on this evaluation, it is concluded that the non-mechanistic 100% fuel rod rupture accident does not affect the safe operation of the HI-STORM 100S-185 System.

11.II.2.10 Confinement Boundary Leakage

A discussion of this accident condition is presented in Subsection 11.2.10 of the main body of Chapter 11. The discussion presented therein also applies to the MPC-32-IP1.

HOLTEC INTERNATIONAL COPYRIGHTED MATERIAL

11.II.2.11 Explosion

A discussion of this accident condition is presented in Subsection 11.2.11 of the main body of Chapter 11. A description of the cause of and corrective actions for this event is presented therein.

Structural

The structural evaluations for the MPC accident condition external pressure and overpack pressure differential are presented in Section 3.4 and demonstrate that all stresses are within allowable limits.

Thermal

There is no effect on the thermal performance of the system as a result of this accident event.

Shielding

There is no effect on the shielding performance of the system as a result of this accident event.

Criticality

There is no effect on the criticality control features of the system as a result of this accident event.

Confinement

There is no effect on the confinement function of the MPC as a result of this accident event. As discussed in the structural evaluation above, all stresses remain well within allowable values, assuring confinement boundary integrity.

Radiation Protection

Since there is no degradation in shielding or confinement capabilities as discussed above, there is no effect on occupational or public exposures as a result of this accident event.

Based on this evaluation, it is concluded that the explosion accident does not affect the safe operation of the HI-STORM 100S-185 System.

11.II.2.12 Lightning

A discussion of this accident condition is presented in Subsection 11.2.12 of the main body of Chapter 11. The discussion presented therein also applies to the HI-STORM 100S-185.

HOLTEC INTERNATIONAL COPYRIGHTED MATERIAL

11.II.2.13 100% Blockage of Air Inlets

A discussion of this accident condition is presented in Subsection 11.2.13 of the main body of Chapter 11. A description of the cause of and corrective actions for this event is presented therein.

Structural

There are no structural consequences as a result of this accident event.

Thermal

The 100% air inlets blockage accident is evaluated in Supplement II, Section 4.II.6.

Shielding

There is no effect on the shielding performance of the system as a result of this accident event, since the concrete temperatures do not exceed the accident temperature limit.

Criticality

There is no effect on the criticality control features of the system as a result of this accident event.

Confinement

There is no effect on the confinement function of the MPC as a result of this accident event.

Radiation Protection

Since there is no degradation in shielding or confinement capabilities as discussed above, there is no effect on occupational or public exposures as a result of this accident event.

Based on this evaluation, it is concluded that the 100% blockage of air inlets accident does not affect the safe operation of the HI-STORM 100S-185 System, if the blockage is removed in the specified time period.

11.II.2.14 Burial Under Debris

A discussion of this accident condition is presented in Subsection 11.2.14 of the main body of Chapter 11. A description of the cause of and corrective actions for this event is presented therein.

HOLTEC INTERNATIONAL COPYRIGHTED MATERIAL

Structural

The structural evaluation of the MPC enclosure vessel for accident internal pressure conditions bounds the pressure calculated herein. Therefore, the resulting stresses from this event are well within the allowable values, as demonstrated in Section 3.4.

Thermal

The burial under debris accident is evaluated in Supplement II, Section 4.II.6.

Shielding

There is no adverse effect on the shielding performance of the system as a result of this accident event.

Criticality

There is no effect on the criticality control features of the system as a result of this accident event.

Confinement

There is no effect on the confinement function of the MPC as a result of this accident event. As discussed in the structural evaluation above, all stresses remain within allowable values, assuring confinement boundary integrity.

Radiation Protection

Since there is no degradation in shielding or confinement capabilities as discussed above, there is no effect on occupational or public exposures as a result of this accident event.

Based on this evaluation, it is concluded that the burial under debris accident does not affect the safe operation of the HI-STORM 100S-185 System, if the debris is removed within the specified time period.

11.II.2.15 Extreme Environmental Temperature

A discussion of this accident condition is presented in Subsection 11.2.15 of the main body of Chapter 11. A description of the cause of and corrective actions for this event is presented therein.

Structural

The structural evaluation of the MPC enclosure vessel for accident condition internal pressure bounds the pressure resulting from this event. Therefore, the resulting stresses from this event

HOLTEC INTERNATIONAL COPYRIGHTED MATERIAL

are bounded by the design-basis internal pressure and are well within the allowable values, as discussed in Section 3.4.

Thermal

The extreme ambient temperature accident is evaluated in Supplement 4.II, Section 4.II.6.

Shielding

There is no effect on the shielding performance of the system as a result of this accident event, since the concrete temperature does not exceed the short-term temperature limit specified in Table 2.2.3.

Criticality

There is no effect on the criticality control features of the system as a result of this accident event.

Confinement

There is no effect on the confinement function of the MPC as a result of this accident event. As discussed in the structural evaluation above, all stresses remain within allowable values, assuring confinement boundary integrity.

Radiation Protection

Since there is no degradation in shielding or confinement capabilities as discussed above, there is no effect on occupational or public exposures as a result of this accident event.

Based on this evaluation, it is concluded that the extreme environment temperature accident does not affect the safe operation of the HI-STORM 100S-185 System.

HOLTEC INTERNATIONAL COPYRIGHTED MATERIAL

B 3.3 SFSC Criticality Control

B 3.3.1 Boron Concentration

BASES

BACKGROUND

A TRANSFER CASK with an empty MPC is placed in the spent fuel pool and loaded with fuel assemblies meeting the requirements of the Certificate of Compliance. A lid is then placed on the MPC. The TRANSFER CASK and MPC are raised to the top of the spent fuel pool surface. The TRANSFER CASK and MPC are then moved into the cask preparation area where the MPC lid is welded to the MPC shell and the welds are inspected and tested. The water is drained from the MPC cavity and drying is performed. The MPC cavity is backfilled with helium. Then, the MPC vent and drain cover plates and closure ring are installed and welded. Inspections are performed on the welds. The TRANSFER CASK bottom pool lid is replaced with the transfer lid to allow eventual transfer of the MPC into the OVERPACK.

For those MPCs containing PWR fuel assemblies of relatively high initial enrichment, credit is taken in the criticality analyses for boron in the water within the MPC. To preserve the analysis basis, users must verify that the boron concentration of the water in the MPC meets specified limits when there is fuel and water in the MPC. This may occur during LOADING OPERATIONS and UNLOADING OPERATIONS.

APPLICABLE SAFETY ANALYSIS

The spent nuclear fuel stored in the SFSC is required to remain subcritical (k_{eff} < 0.95) under all conditions of storage. The HI-STORM 100 SFSC is analyzed to store a wide variety of spent nuclear fuel assembly types with differing initial enrichments. For ~~all~~*most* PWR fuel loaded in the MPC-32 and MPC-32F, and for relatively high enrichment PWR fuel loaded in the MPC-24, -24E, and -24EF, credit was taken in the criticality analyses for neutron poison in the form of soluble boron in the water within the MPC. Compliance with this LCO preserves the assumptions made in the criticality analyses regarding credit for soluble boron.

(continued)

HOLTEC INTERNATIONAL COPYRIGHTED MATERIAL

BASES (continued)

LCO

Compliance with this LCO ensures that the stored fuel will remain subcritical with a $k_{eff} \leq 0.95$ while water is in the MPC. LCOs 3.3.1.a and 3.3.1.b provide the minimum concentration of soluble boron required in the MPC water for the MPC-24, and MPC-24E/24EF, respectively, for MPCs containing all INTACT FUEL ASSEMBLIES. The limits are applicable to the respective MPCs if one or more fuel assemblies to be loaded in the MPC had an initial enrichment of U-235 greater than the value in Table 2.1-2 of Appendix B to the CoC for loading with no soluble boron credit.

LCO 3.3.1.e provides the minimum concentration of soluble boron required in the MPC water for the MPC-24E and MPC-24EF containing at least one DAMAGED FUEL ASSEMBLY or one fuel assembly classified as FUEL DEBRIS.

LCO 3.3.1.f provides the minimum concentration of soluble boron required in the MPC water for the MPC-32 and MPC-32F based on the fuel assembly array/class and the classification of the fuel as a DAMAGED FUEL ASSEMBLY or FUEL DEBRIS.

All fuel assemblies loaded into the MPC-24, MPC-24E, MPC-24EF, MPC-32, and MPC-32F are limited by analysis to maximum enrichments ~~of~~ *not exceeding* 5.0 wt.% U-235.

The LCO also requires that the minimum soluble boron concentration for the most limiting fuel assembly array/class and classification to be stored in the same MPC be used. This means that the highest minimum soluble boron concentration limit for all fuel assemblies in the MPC applies in cases where fuel assembly array/classes and fuel classifications (intact vs. damaged) are mixed in the same MPC. This ensures the assumptions pertaining to soluble boron used in the criticality analyses are preserved.

(continued)

HOLTEC INTERNATIONAL COPYRIGHTED MATERIAL

BASES

APPLICABILITY

The boron concentration LCO is applicable whenever an MPC-24, -24E, -24EF, -32, or -32F has at least one PWR fuel assembly in a storage location and water in the MPC, For the MPC-24 and MPC-24E/24EF, when all fuel assemblies to be loaded have initial enrichments less than the limit for no soluble boron credit as provided in CoC Appendix B, Table 2.1-2, the boron concentration requirement is implicitly understood to be zero.

During LOADING OPERATIONS, the LCO is applicable immediately upon the loading of the first fuel assembly in the MPC. It remains applicable until the MPC is drained of water

During UNLOADING OPERATIONS, the LCO is applicable when the MPC is re-flooded with water after helium cooldown operations. Note that compliance with SR 3.0.4 assures that the water to be used to flood the MPC is of the correct boron concentration to ensure the LCO is upon entering the Applicability.

ACTIONS

A note has been added to the ACTIONS which states that, for this LCO, separate Condition entry is allowed for each MPC. This is acceptable since the Required Actions for each Condition provide appropriate compensatory measures for each MPC not meeting the LCO. Subsequent MPCs that do not meet the LCO are governed by subsequent Condition entry and application of associated Required Actions.

A.1 and A.2

Continuation of LOADING OPERATIONS, UNLOADING OPERATIONS or positive reactivity additions (including actions to reduce boron concentration) is contingent upon maintaining the SFSC in compliance with the LCO. If the boron concentration of water in the MPC is less than its limit, all activities LOADING OPERATIONS, UNLOADING OPERATIONS or positive reactivity additions must be suspended immediately.

(continued)

HOLTEC INTERNATIONAL COPYRIGHTED MATERIAL

BASES

ACTIONS (continued)

A.3

In addition to immediately suspending LOADING OPERATIONS, UNLOADING OPERATIONS and positive reactivity additions, action to restore the concentration to within the limit specified in the LCO must be initiated immediately.

One means of complying with this action is to initiate boration of the affected MPC. In determining the required combination of boration flow rate and concentration, there is no unique design basis event that must be satisfied; only that boration be initiated without delay. In order to raise the boron concentration as quickly as possible, the operator should begin boration with the best source available for existing plant conditions.

Once boration is initiated, it must be continued until the boron concentration is restored. The restoration time depends on the amount of boron that must be injected to reach the required concentration.

SURVEILLANCE REQUIREMENTS (continued)

SR 3.3.1.1

The boron concentration in the MPC water must be verified to be within the applicable limit within four hours prior to entering the Applicability of the LCO. For LOADING OPERATIONS, this means within four hours of loading the first fuel assembly into the cask.

For UNLOADING OPERATIONS, this means verifying the source of borated water to be used to re-flood the MPC within four hours of commencing re-flooding operations. This ensures that when the LCO is applicable (upon introducing water into the MPC), the LCO will be met.

(continued)

HOLTEC INTERNATIONAL COPYRIGHTED MATERIAL

BASES

SURVEILLANCE REQUIREMENTS (continued)

Surveillance Requirement 3.3.1.1 is modified by a note which states that SR 3.3.1.1 is only required to be performed if the MPC is submerged in water or if water is to be added to, or recirculated through the MPC. This reflects the underlying premise of this SR which is to ensure, once the correct boron concentration is established, it need only be verified thereafter if the MPC is in a state where the concentration could be changed.

There is no need to re-verify the boron concentration of the water in the MPC after it is removed from the spent fuel pool unless water is to be added to, or recirculated through the MPC, because these are the only credible activities that could potentially change the boron concentration during this time. This note also prevents the interference of unnecessary sampling activities while lid closure welding and other MPC storage preparation activities are taking place in an elevated radiation area atop the MPC. Plant procedures should ensure that any water to be added to, or recirculated through the MPC is at a boron concentration greater than or equal to the minimum boron concentration specified in the LCO

REFERENCES

1. FSAR Chapter 6.

HOLTEC INTERNATIONAL COPYRIGHTED MATERIAL

SUPPLEMENT 12.II

OPERATING CONTROLS AND LIMITS

The main body of this chapter remains fully applicable for the IP1 specific options of the HI-STORM 100 System.

HOLTEC INTERNATIONAL COPYRIGHTED MATERIAL

SUPPLEMENT 13.II

QUALITY ASSURANCE

The main body of this chapter remains fully applicable for the IP1 specific options of the HI-STORM 100 System.

HOLTEC INTERNATIONAL COPYRIGHTED MATERIAL