STOP, THINK, ACT AND REVIEW

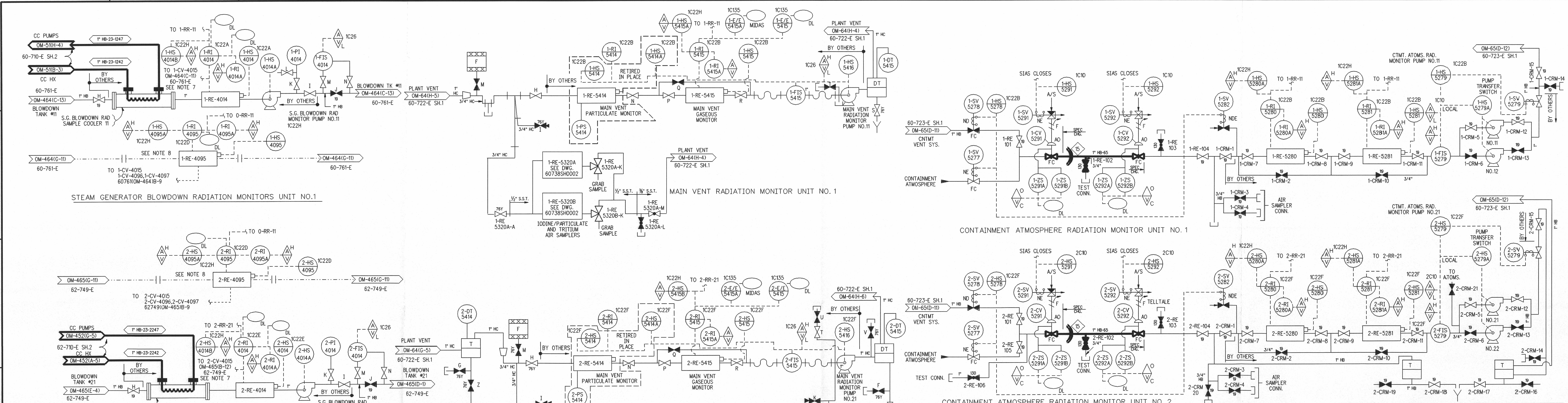

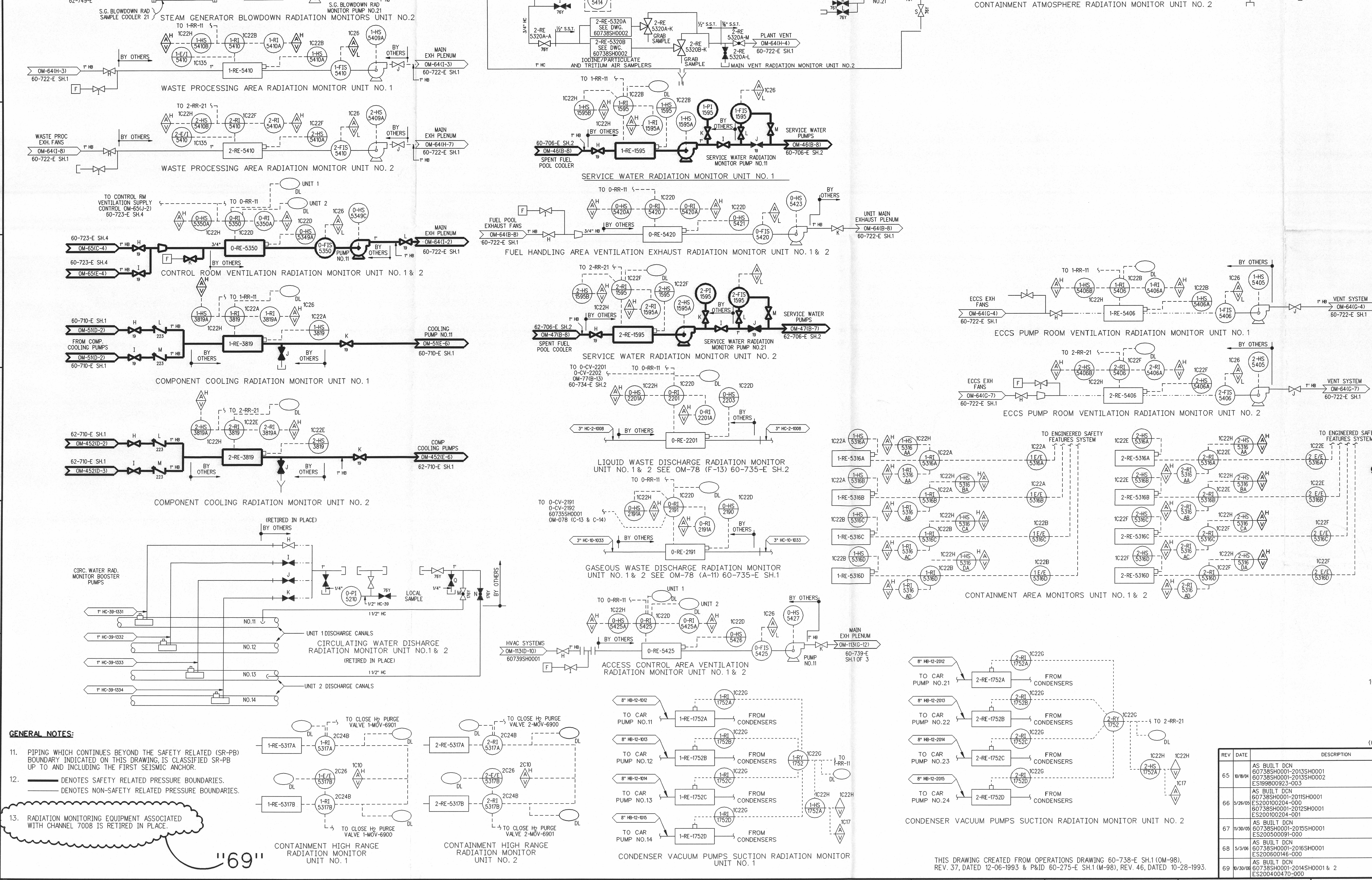

CHECK SOURCE — -HS 1C22 — TO RADIATION RECORDER
-RE- DETECTOR — 1C22 -RI — 1C22H -HS A
-RI — AREA RADIATION MONITOR, SEE TABLE FOR AREA & INSTRUMENT NUMBERS

— AREA —	DETECTOR	1C22 INDICATOR	LOCAL INDICATOR	HAND SWITCH	RECORDER
UNIT 1					
ECCS PUMP ROOM 119	1-RE-7004	1-RI-7004	1-RI-7004A	1-HS-7004	1-RR-11
ECCS PUMP ROOM 118	1-RE-7005	1-RI-7005	1-RI-7005A	1-HS-7005	1-RR-11
SAMPLE ROOM 424	1-RE-7006	1-RI-7006	1-RI-7006A	1-HS-7006	1-RR-11
CTMT. IN-CORE NUCLEAR INSTRUMENTATION AREA	—	1-RI-7008	—	1-HS-7008	SEE NOTE 13
CONCENTRATED BORIC ACID STORAGE ROOM 217	1-RE-7010	1-RI-7010	1-RI-7010A	1-HS-7010	1-RR-11
PENETRATION ROOM 221	1-RE-7011	1-RI-7011	1-RI-7011A	1-HS-7011	1-RR-11
BLOWDOWN TANK AREA	1-RE-7012	1-RI-7012	1-RI-7012A	1-HS-7012	1-RR-11
UNIT 2					
ECCS PUMP ROOM 101	2-RE-7004	2-RI-7004	2-RI-7004A	2-HS-7004	2-RR-21
ECCS PUMP ROOM 102	2-RE-7005	2-RI-7005	2-RI-7005A	2-HS-7005	2-RR-21
SAMPLE ROOM 413	2-RE-7006	2-RI-7006	2-RI-7006A	2-HS-7006	2-RR-21
CTMT. IN-CORE NUCLEAR INSTRUMENTATION AREA	—	2-RI-7008	—	2-HS-7008	SEE NOTE 13
CONCENTRATED BORIC ACID STORAGE ROOM 215	2-RE-7010	2-RI-7010	2-RI-7010A	2-HS-7010	2-RR-21
PENETRATION ROOM 211	2-RE-7011	2-RI-7011	2-RI-7011A	2-HS-7011	2-RR-21
BLOWDOWN TANK AREA	2-RE-7012	2-RI-7012	2-RI-7012A	2-HS-7012	2-RR-21
COMMON UNIT 1 & 2					
MISC. WASTE EVAP. RM.	SEE NOTE 9	0-RI-7028	0-RI-7028A	0-HS-7028	0-RR-11
R.C. WASTE RECV. TK. ROOM 113	0-RE-7016	0-RI-7016	0-RI-7016A	0-HS-7016	0-RR-11
R.C. WASTE PUMP AREA ROOM 110	0-RE-7017	0-RI-7017	0-RI-7017A	0-HS-7017	0-RR-11
WASTE GAS EQUIP. ROOM 208	0-RE-7018	0-RI-7018	0-RI-7018A	0-HS-7018	0-RR-11
DECONTAMINATION ROOM 210	0-RE-7019	0-RI-7019	0-RI-7019A	0-HS-7019	0-RR-11
SPENT FUEL POOL HT. EXCHG. ROOM 320	0-RE-7020	0-RI-7020	0-RI-7020A	0-HS-7020	0-RR-11
DRUM STORAGE AREA ROOM 418	0-RE-7021	0-RI-7021	0-RI-7021A	0-HS-7021	0-RR-11
LIQUID WASTE EVAP. ROOM 420	0-RE-7022	0-RI-7022	0-RI-7022A	0-HS-7022	0-RR-11
CHEMISTRY LABORATORY	0-RE-7023	0-RI-7023	0-RI-7023A	0-HS-7023	0-RR-11
AUX. BLDG. SPENT FUEL POOL AREA	0-RE-7024	0-RI-7024	0-RI-7024A	0-HS-7024	0-RR-11
AUX. BLDG. SPENT FUEL POOL SERVICE PLATFORM	0-RE-7025	0-RI-7025	0-RI-7025A	0-HS-7025	0-RR-11
NEW FUEL STORAGE AREA	0-RE-7026	0-RI-7026	0-RI-7026A	0-HS-7026	0-RR-11
GAS ANALYZING EQUIP. ROOM 111	0-RE-7027	0-RI-7027	0-RI-7027A	0-HS-7027	0-RR-11

"69"

GENERAL NOTES:

1. FOR P&ID LEGEND SEE DRAWING 6750-M-80 (B.G.& E. NO. 60-263-E)
2. FOR DEFINITION OF LINE DESIGNATIONS SEE PIPING CLASS AND SUMMARY SHEETS 6750-M-600, 601, 602 (B.G.& E. NO. 92-767-A, 92-768-A AND 92-769-A).
3. FOR EQUIPMENT LIST SEE 6750-M-603 (B.G.& E. NO. 92-772-A)
4. FOR INSTRUMENT DATA SHEETS SEE 6750-M-500 (B.G.& E. NO. 92-401-A THRU 92-422-B).
5. EQUIPMENT NUMBERS FOR UNIT NO. 1 ARE PREFIXED BY THE NUMBER 1 (EXAMPLE NO. 11, 12, 13, ETC.) EQUIPMENT NUMBERS FOR UNIT NO. 2 ARE PREFIXED BY THE NUMBER 2 (EXAMPLE NO. 21, 22, 23, ETC.) EQUIPMENT COMMON TO BOTH UNITS IS NUMBERED AS FOR UNIT NO. 1.
6. FOR RADIATION MONITORS IN THE SOLID WASTE PROCESSING SYSTEM SEE DWG. 6750-M-215 (B.G.& E. NO. 60-380-E).
7. 1(2) RE-4014 SHUTS 1(2) CV-4010, 1(2) CV 4011, 1(2) CV-4012 AND 1(2) CV-4013. ALSO SHUTS 1(2) CV-4015 AND 1(2) CV-4096, AND OPENS 1(2) CV-4097 WHEN THE IX HIGH TEMPERATURE BYPASS 1(2) CV-4088 IS OPEN.
8. 1(2) RE-4095 SHUTS 1(2) CV-4015 AND 1(2) CV-4096, AND OPENS 1(2) CV-4097.
9. LOCAL RI & RE ARE REMOVED. RI AT 1C22 IS RETIRED IN PLACE.
10. THE Q-LIST INFORMATION PROVIDED ON THIS DRAWING IDENTIFIES THE SAFETY RELATED PRESSURE BOUNDARIES (SR-PB). EQUIPMENT WITHIN THE BOUNDARIES IS ALSO CLASSIFIED SR-PB, AS A MINIMUM. THE NUCLEIS MASTER EQUIPMENT LIST MUST BE USED FOR IDENTIFYING SPECIFIC OR ADDITIONAL SAFETY CLASSIFICATION INFORMATION, INCLUDING COMPONENT CLASSIFICATIONS AND ASSOCIATED REQUIREMENTS.

(CONTINUED)

GENERAL NOTES:

11. PIPING WHICH CONTINUES BEYOND THE SAFETY RELATED (SR-PB) BOUNDARY INDICATED ON THIS DRAWING, IS CLASSIFIED SR-PB UP TO AND INCLUDING THE FIRST SEISMIC ANCHOR.
12. ——— DENOTES SAFETY RELATED PRESSURE BOUNDARIES.
——— DENOTES NON-SAFETY RELATED PRESSURE BOUNDARIES.
13. RADIATION MONITORING EQUIPMENT ASSOCIATED WITH CHANNEL 7008 IS RETIRED IN PLACE.

THIS DRAWING CREATED FROM OPERATIONS DRAWING 60-738-E SH.1 (OM-98), REV. 37, DATED 12-06-1993 & P&ID 60-275-E SH.1 (M-98), REV. 46, DATED 10-28-1993.

REV	DATE	DESCRIPTION	DWN	DSGN	DE	IR	APPROVED
65	10/18/04	AS BUILT DCN 60738SH0001-2013SH0001 60738SH0001-2013SH0002 ES199800923-003	JB Rkl	—	—	—	Rkl
66	5/26/05	AS BUILT DCN 60738SH0001-2011SH0001 ES200100204-000 60738SH0001-2012SH0001 ES200100204-001	WHR Rkl	—	—	—	Rkl
67	11/30/05	AS BUILT DCN 60738SH0001-2015SH0001 ES200500091-000	WHR Rkl	—	—	—	Rkl
68	5/3/06	AS BUILT DCN 60738SH0001-2016SH0001 ES200600146-000	WHR Rkl	—	—	—	Rkl
69	10/30/06	AS BUILT DCN 60738SH0001-2014SH0001 & 2 ES200400470-000	EAM Rkl	—	—	—	Rkl

AREA & PROCESS RADIATION MONITORING SYSTEM

CALVERT CLIFFS NUCLEAR POWER PLANT
ENGINEERING SERVICES DEPARTMENT
CALVERT CLIFFS UNIT 1&2 — SIZE E — CAT. C
SCALE: NONE — VENDOR DWG. NO. OM-098SH0001 — REV.
DWG. NO. 60738SH0001 — 69

D-40