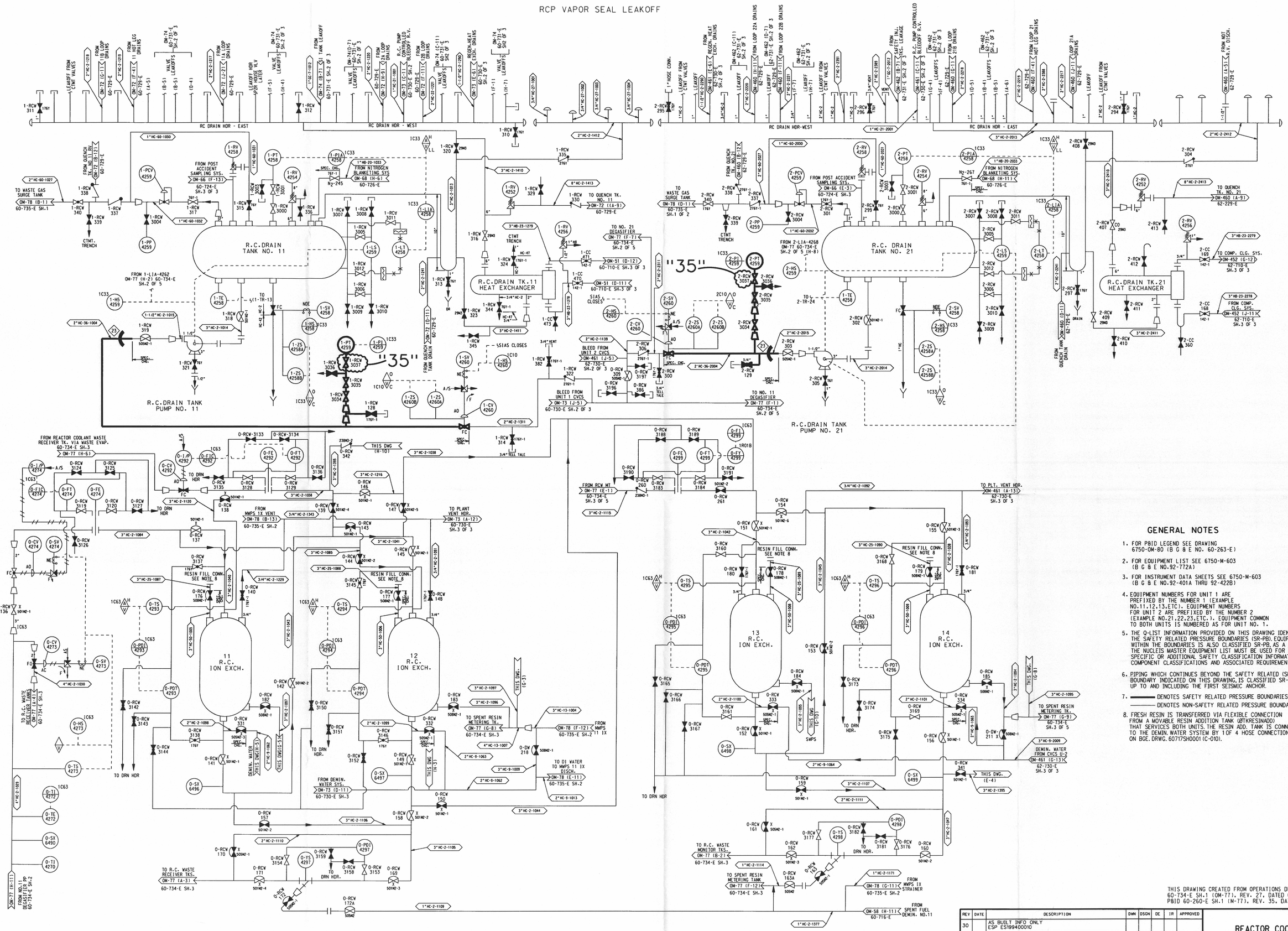

GENERAL NOTES

1. FOR P&ID LEGEND SEE DRAWING 6750-OM-80 (B G & E NO. 60-263-E)
2. FOR EQUIPMENT LIST SEE 6750-M-603 (B G & E NO.92-772A)
3. FOR INSTRUMENT DATA SHEETS SEE 6750-M-603 (B G & E NO.92-401A THRU 92-422B)
4. EQUIPMENT NUMBERS FOR UNIT 1 ARE PREFIXED BY THE NUMBER 1 (EXAMPLE NO.11,12,13,ETC). EQUIPMENT NUMBERS FOR UNIT 2 ARE PREFIXED BY THE NUMBER 2 (EXAMPLE NO.21,22,23,ETC.). EQUIPMENT COMMON TO BOTH UNITS IS NUMBERED AS FOR UNIT NO. 1.
5. THE Q-LIST INFORMATION PROVIDED ON THIS DRAWING IDENTIFIES THE SAFETY RELATED PRESSURE BOUNDARIES (SR-PB). EQUIPMENT WITHIN THE BOUNDARIES IS ALSO CLASSIFIED SR-PB, AS A MINIMUM. THE NUCLEIS MASTER EQUIPMENT LIST MUST BE USED FOR IDENTIFYING SPECIFIC OR ADDITIONAL SAFETY CLASSIFICATION INFORMATION, INCLUDING COMPONENT CLASSIFICATIONS AND ASSOCIATED REQUIREMENTS.
6. PIPING WHICH CONTINUES BEYOND THE SAFETY RELATED (SR-PB) BOUNDARY INDICATED ON THIS DRAWING, IS CLASSIFIED SR-PB UP TO AND INCLUDING THE FIRST SEISMIC ANCHOR.
7. ——— DENOTES SAFETY RELATED PRESSURE BOUNDARIES.
   ——— DENOTES NON-SAFETY RELATED PRESSURE BOUNDARIES.
8. FRESH RESIN IS TRANSFERRED VIA FLEXIBLE CONNECTION FROM A MOVABLE RESIN ADDITION TANK (ØTKRESINADD) THAT SERVICES BOTH UNITS. THE RESIN ADD. TANK IS CONNECTED TO THE DEMIN. WATER SYSTEM BY 1 OF 4 HOSE CONNECTIONS ON BGE. DRWG. 60717SH0001 (C-010).

THIS DRAWING CREATED FROM OPERATIONS DRAWING 60-734-E SH.1 (OM-77), REV. 27, DATED 09-15-1992 & P&ID 60-260-E SH.1 (M-77), REV. 35, DATED 09-15-1992.

REV	DATE	DESCRIPTION	DWN	DSGN	DE	IR	APPROVED
30		AS BUILT INFO ONLY ESP ES199400010					
31		AS BUILT INFO ONLY ESP ES199600759					
32		AS BUILT DCN 60734SH0001-2001SH0001 ES199800275-000					
33		AS BUILT INFO ONLY ESP ES199600744-000					
34	7/5/00	AS BUILT INFO ONLY ES200000628-000	JCH	-	-	-	JM
35	4/4/02	AS BUILT INFO ONLY ES199700623-000	KWS	-	-	-	KWS

REACTOR COOLANT WASTE PROCESSING SYSTEMS

CALVERT CLIFFS NUCLEAR POWER PLANT

CALVERT CLIFFS UNIT 1&2 — SIZE E — CAT. C

SCALE: NONE — VENDOR DWG. NO. OM-077SH0001 — REV. 35

INTER NO. 16755.DGN — DWG. NO. 60734SH0001

D-36

LEVELS 1234567890111111111122222222223333333333444444444455555555556666 0123456789012345678901234567890123456789012345678901234567890123

LAST USER 1 BILL RICE
LAST DATE WORKED 16/4/02