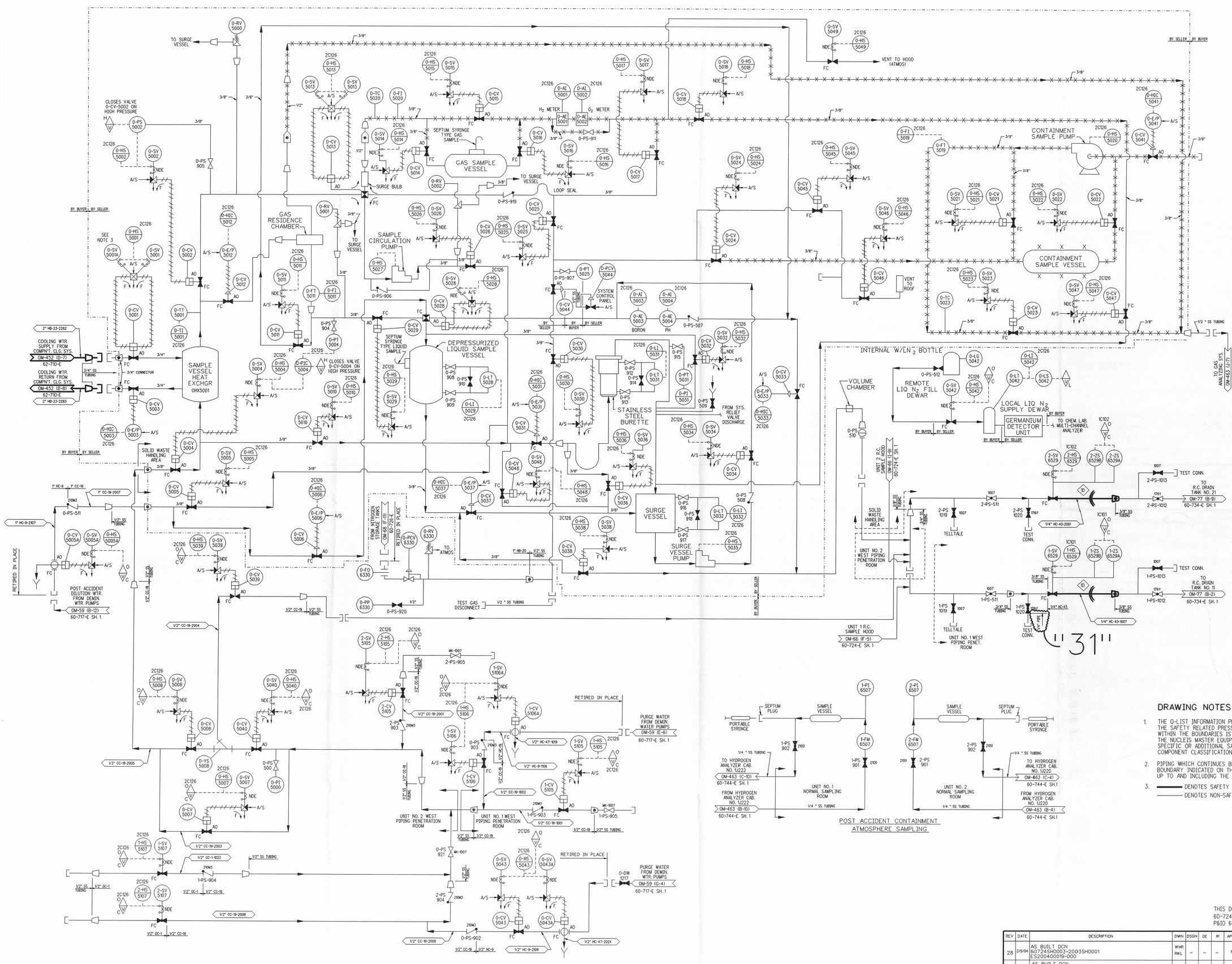

GENERAL NOTE:

1. REFERENCE SHEET NUMBER 1.

DRAWING NOTES:

1. THE Q-LIST INFORMATION PROVIDED ON THIS DRAWING IDENTIFIES THE SAFETY RELATED PRESSURE BOUNDARIES (SR-PB). EQUIPMENT WITHIN THE BOUNDARIES IS ALSO CLASSIFIED SR-PB, AS A MINIMUM. THE NUCLEIS MASTER EQUIPMENT LIST MUST BE USED FOR IDENTIFYING SPECIFIC OR ADDITIONAL SAFETY CLASSIFICATION INFORMATION, INCLUDING COMPONENT CLASSIFICATIONS AND ASSOCIATED REQUIREMENTS.
2. PIPING WHICH CONTINUES BEYOND THE SAFETY RELATED (SR-PB) BOUNDARY INDICATED ON THIS DRAWING, IS CLASSIFIED SR-PB UP TO AND INCLUDING THE FIRST SEISMIC ANCHOR.
3. ▬▬▬ DENOTES SAFETY RELATED PRESSURE BOUNDARIES.
   ▬▬▬ DENOTES NON-SAFETY RELATED PRESSURE BOUNDARIES.

THIS DRAWING CREATED FROM OPERATIONS DRAWING 60-724-E SH.3 (OM-66), REV. 14 DATED 05-10-1994 & P&ID 60-249-E SH.3 (M-66), REV. 11, DATED 05-10-1994.

REV	DATE	DESCRIPTION	DWN	DSGN	DE	IR	APPROVED
28	2/6/04	AS BUILT DCN 60724SH0003-2003SH0001 ES200400019-000	WHR RKL	–	–	–	RKL
29	9/3/04	AS BUILT DCN 60724SH0003-2005SH0001 ES200300643-000	WHR RKL	–	–	–	RKL
30	9/20/04	AS BUILT DCN 60724SH0003-2004SH0001 ES200400429-000	WHR RKL	—	—	—	RKL
31	4/25/06	AS BUILT DCN 60724SH0003-2006SH0001 ES200500466-000	WHR RKL	–	–	–	RKL

REACTOR COOLANT & WASTE PROCESS SAMPLE SYSTEM POST ACCIDENT SAMPLING SYSTEM

CALVERT CLIFFS NUCLEAR POWER PLANT
ENGINEERING SERVICES DEPARTMENT

CALVERT CLIFFS UNIT 1&2 | SIZE E | CAT. C
SCALE: NONE | VENDOR DWG. NO. OM-066SH0003 | REV. 31
DWG. NO. 60724SH0003

D-21