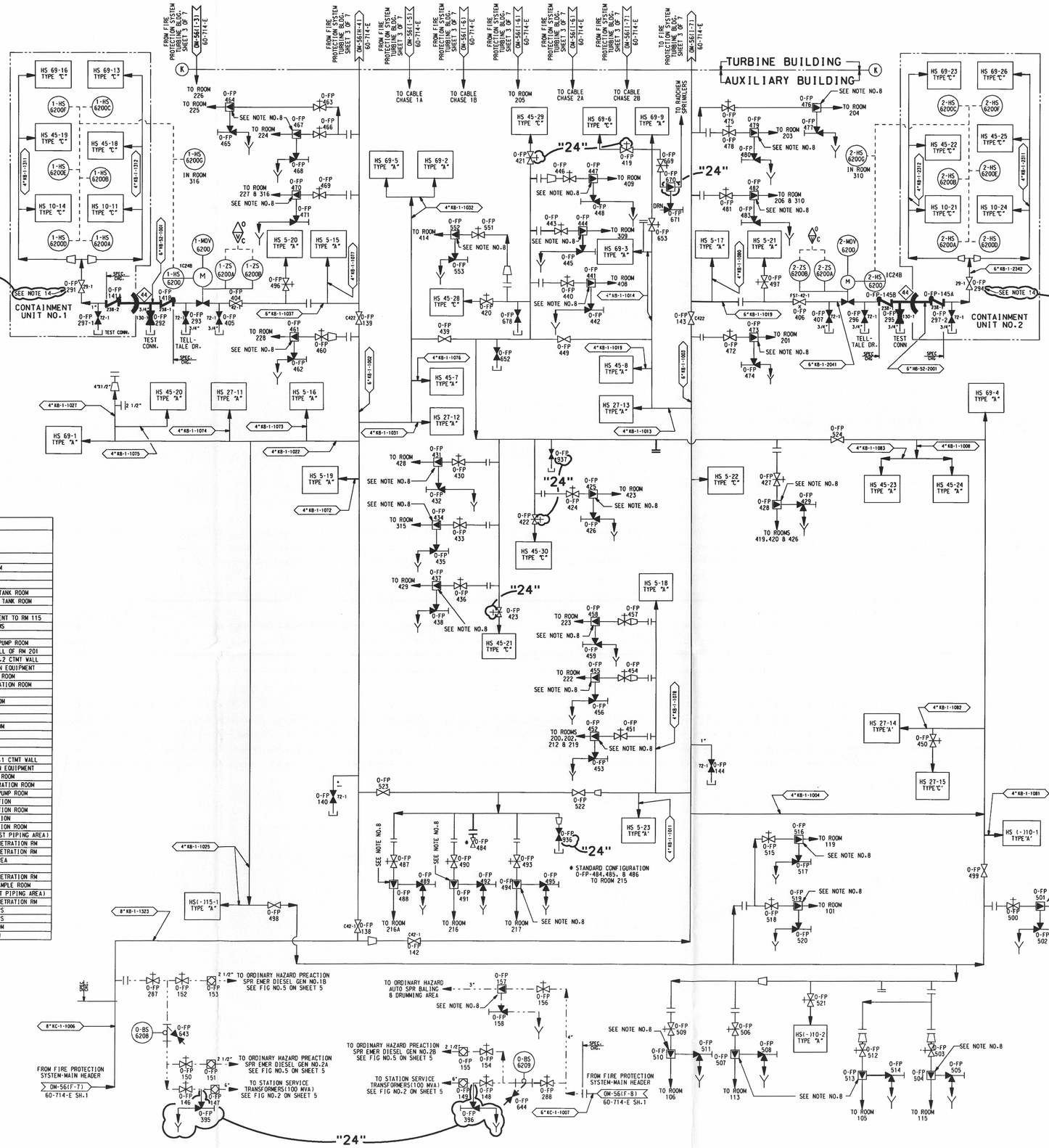


## GENERAL NOTES

1. FOR P & I.D. LEGEND SEE DRAWING 6750-M-80. (B.G.& E. NO.60-263-E)
2. FOR INSTRUMENT DATA SHEETS SEE 6750-M-500. (B.G & E. NO.92-401-A THRU 92-422-B)
3. FOR EQUIPMENT LIST SEE 6750-M-603, B.G.& E. NO.92-772-A
4. EQUIPMENT NUMBERS FOR UNIT NO.1 ARE PREFIXED BY THE NUMBER 1 (EXAMPLE NO. 11,12,13, ETC.) EQUIPMENT NUMBERS FOR UNIT NO.2 ARE PREFIXED BY THE NUMBER 2 (EXAMPLE NO.21,22,23, ETC.) EQUIPMENT COMMON TO BOTH UNITS IS NUMBERED AS FOR UNIT NO.1.
5. WORK THIS DWG. WITH DWGS. OM-56(60-714-E) SHTS. 1,3,5 & 6
6. HOSE RACK UNIT CONSISTS OF 2 1/2" ANGLE VALVE,2 1/2" STEEL ESCUTCHEON,2 1/2" X 1 1/2" HOSE RACK W/2 1/2" NIPPLE, 2 1/2" X 1 1/2" RED, 1 1/2" HOSE, 1 1/2" CPLG. & 1 1/2" FOG NOZZLE.
7. ALL HOSE STATIONS LOCATED BELOW EL. 45'-0" SHALL BE EQUIPPED WITH A PRESSURE RESTRICTING VALVE.
8. ALARM CHECK VALVES ARE EQUIPPED WITH A BY-PASS LINE OR RELIEF VALVES TO LIMIT DOWNSTREAM PRESSURE. SEE FIG.1 ON SH.5.
9. FOR SPRINKLER HEAD ASSEMBLY DETAILS SEE FIGURES1,2,3,4,& 5 ON SHEET 5.
10. FOR DEFINITIONS OF LINE DESIGNATION SEE PIPING CLASS AND SUMMARY SHEETS 6750-M-600 & 601
11. THE Q-LIST INFORMATION PROVIDED ON THIS DRAWING IDENTIFIES THE SAFETY RELATED PRESSURE BOUNDARIES (SR-PB). EQUIPMENT WITHIN THE BOUNDARIES IS ALSO CLASSIFIED SR-PB, AS A MIMINUM. THE NUCLEIS MASTER EQUIPMENT LIST MUST BE USED FOR IDENTIFYING SPECIFIC OR ADDITIONAL SAFETY CLASSIFICATION INFORMATION, INCLUDING COMPONENT CLASSIFICATIONS AND ASSOCIATION REQUIREMENTS.
12. PIPING WHICH CONTINUES BEYOND THE SAFETY RELATED (SR-PB) BOUNDARY INDICATED ON THIS DRAWING, IS CLASSIFIED SR-PB UP TO AND INCLUDING THE FIRST SEISMIC ANCHOR.
13. ═══ DENOTES SAFETY RELATED PRESSURE BOUNDARIES.
    ─ ─ ─ DENOTES NON-SAFETY RELATED PRESSURE BOUNDARIES.
14. MARK NUMBER DEEMED ACCEPTABLE PER MCR 91-013-004-00.

## ROOM KEY

| ROOM NO. | ACCESS ELEV. | DESCRIPTION |
|---|---|---|
| 100 | (-)15' | CORRIDOR BETWEEN ECCS ROOMS |
| 101 | (-)15' | UNIT NO.2 EAST ECCS PUMP ROOM |
| 103 | (-)10' | HALL WEST OF ECCS PUMP ROOM |
| 105 | (-)10' | UNIT NO.2 CHARGING PUMP ROOM |
| 106 | (-)10' | MISCELLANEOUS WASTE MONITOR TANK ROOM |
| 113 | (-)10' | MISCELLANEOUS WASTE RECEIVER TANK ROOM |
| 115 | (-)10' | UNIT NO.1 CHARGING PUMP ROOM |
| 116 | (-)10' | AREA SOUTH OF ELEVATOR ADJACENT TO RM 115 |
| 119 | (-)15' | UNIT NO.1 EAST ECCS PUMP ROOMS |
| 200 | 5' | E-W CORRIDOR AUX BLDG. |
| 201 | 5' | UNIT NO.2 COMPONENT COOLING PUMP ROOM |
| 202 | 5' | CORRIDOR ADJACENT TO WEST WALL OF RM 201 |
| 203 | 5' | PIPING AREA NORTH OF UNIT NO.2 CTMT WALL |
| 204 | 5' | UNIT NO.2 EXHAUST VENTILATION EQUIPMENT |
| 205 | 3' 15' | UNIT NO.2 SERVICE WATER PUMP ROOM |
| 206 | 5' | UNIT NO.2 EAST PIPING PENETRATION ROOM |
| 212 | 5' | CORRIDOR EAST OF VCT ROOMS |
| 215 | 5' | UNIT NO.2 BORIC ACID TANK ROOM |
| 216 | 5' | UNIT NO.1 RC MAKE-UP ROOM |
| 216A | 5' | UNIT NO.2 RC MAKE-UP ROOM |
| 217 | 5' | UNIT NO.1 BORIC ACID TANK ROOM |
| 219 | 5' | CORRIDOR BY ELEVATOR |
| 222 | 5' | HOT INSTRUMENT SHOP |
| 223 | 5' | HOT MACHINE SHOP |
| 224 | 5' | PIPING AREA SOUTH OF UNIT NO.1 CTMT WALL |
| 225 | 5' | UNIT NO.1 EXHAUST VENTILATION EQUIPMENT |
| 226 | 3' 15' | UNIT NO.1 SERVICE WATER PUMP ROOM |
| 227 | 5' | UNIT NO.1. EAST PIPING PENETRATION ROOM |
| 228 | 5' | UNIT NO.1 COMPONENT COOLING PUMP ROOM |
| 309 | 27' | UNIT NO.2 MAIN STEAM PENETRATION |
| 310 | 27' | UNIT NO.2 EAST PIPING PENETATION ROOM |
| 315 | 27' | UNIT NO.1 MAIN STEAM PENETRATION |
| 316 | 27' | UNIT NO.1 EAST PIPING PENETATION ROOM |
| 408 | 45' | UNIT NO. 2 BLOWDOWN TK RM (EAST PIPING AREA) |
| 409 | 45' | UNIT NO.2 EAST ELECTRICAL PENETRATION RM |
| 414 | 45' | UNIT NO.2 WEST ELECTRICAL PENETRATION RM |
| 419 | 45' | CASK AND EQUIPMENT LOADING AREA |
| 420 | 45' | LIQUID WASTE EVAPORATOR ROOM |
| 423 | 45' | UNIT NO.1 WEST ELECTRICAL PENETRATION RM |
| 426 | 45' | CORRIDOR EAST OF UNIT NO.1 SAMPLE ROOM |
| 428 | 45' | UNIT NO.1 BLOWDOWN TK RM (EAST PIPING AREA) |
| 429 | 45' | UNIT NO.1 EAST ELECTRICAL PENETRATION RM |
| 603 | 12' TURB | UNIT NO.1 AUXILIARY FEED PUMPS |
| 605 | 12' TURB | UNIT NO.2 AUXILIARY FEED PUMPS |
| 102 | (-)15' | UNIT NO.2 WEST ECCS PUMP ROOM |
| 118 | (-)15' | UNIT NO.1 WEST ECCS PUMP ROOM |

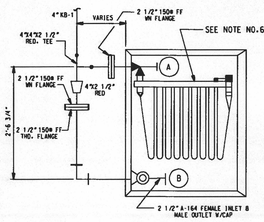


TYPE "A"

TYPICAL HOSE STSTION (CABINET OPTIONAL)

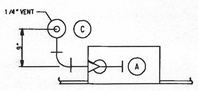


TYPE "B"

RECESSED HOSE STATION

NOTE: FIELD TO PROVIDE ACCESS OPENINGS TO VENT VALVES WHERE NECESSARY

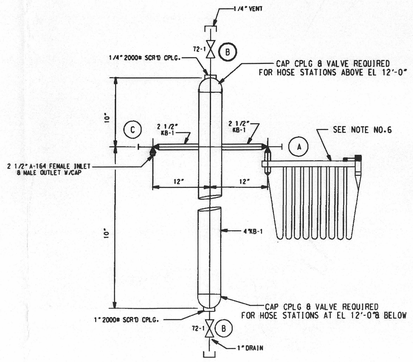


TYPE "C"

TYPICAL HOSE STATION

HOSE STATION
FLOOR ELEVATION
STATION NUMBER

HS 45 -2

HOSE STATION DETAILS

THIS DRAWING CREATED FROM OPERATIONS DRAWING 60714SH0002 (OM-56), REV. 13, DATED 06-10-1992 & P&ID 60239SH0002 (M-56), REV. 7, DATED 06-25-1992.

| REV | DATE | DESCRIPTION | DWN | DSGN | DE | IR | APPROVED |
|---|---|---|---|---|---|---|---|
| 22 | | AS BUILT DCN 60714SH0002-1004SH0001 FCR 89-0079 (SUB Z) | | | | | |
| 23 | | AS BUILT DCN 60714SH0002-1005SH0001 FCR 89-0079 (SUB GG) | | | | | |
| 24 | 5/1/00 | AS BUILT INFO. ONLY. ESP ES199800058-000 AND ESP ES199600983-000 | | — | — | — | jmc |

DRAWN
DESIGNED
CIVIL ENGR.
ELECT. ENGR.
I & C ENGR.
MECH. ENGR.
I.R.
APPROVED
DATE

# PLANT FIRE PROTECTION SYSTEM AUXILIARY AND CONTAINMENT BUILDINGS

BALTIMORE GAS AND ELECTRIC COMPANY
NUCLEAR ENGINEERING DEPARTMENT

CALVERT CLIFFS UNIT 1&2
ELECTRIC PRODUCTION PLANT

SIZE: E | CAT.: C

SCALE: NONE | VENDOR DWG. NO.: OM-056SH0002 | REV.: 24

INTER NO.: 16717.DGN | DWG. NO.: 60714SH0002

D-13

LEVELS 1234567891111111112222222223333333333444444444455555555556666 0123456789012345678901234567890123456789012345678901234567890123

LAST USER (L.BUCKLER / JCH)
LAST DATE WORKED (05-08-00)