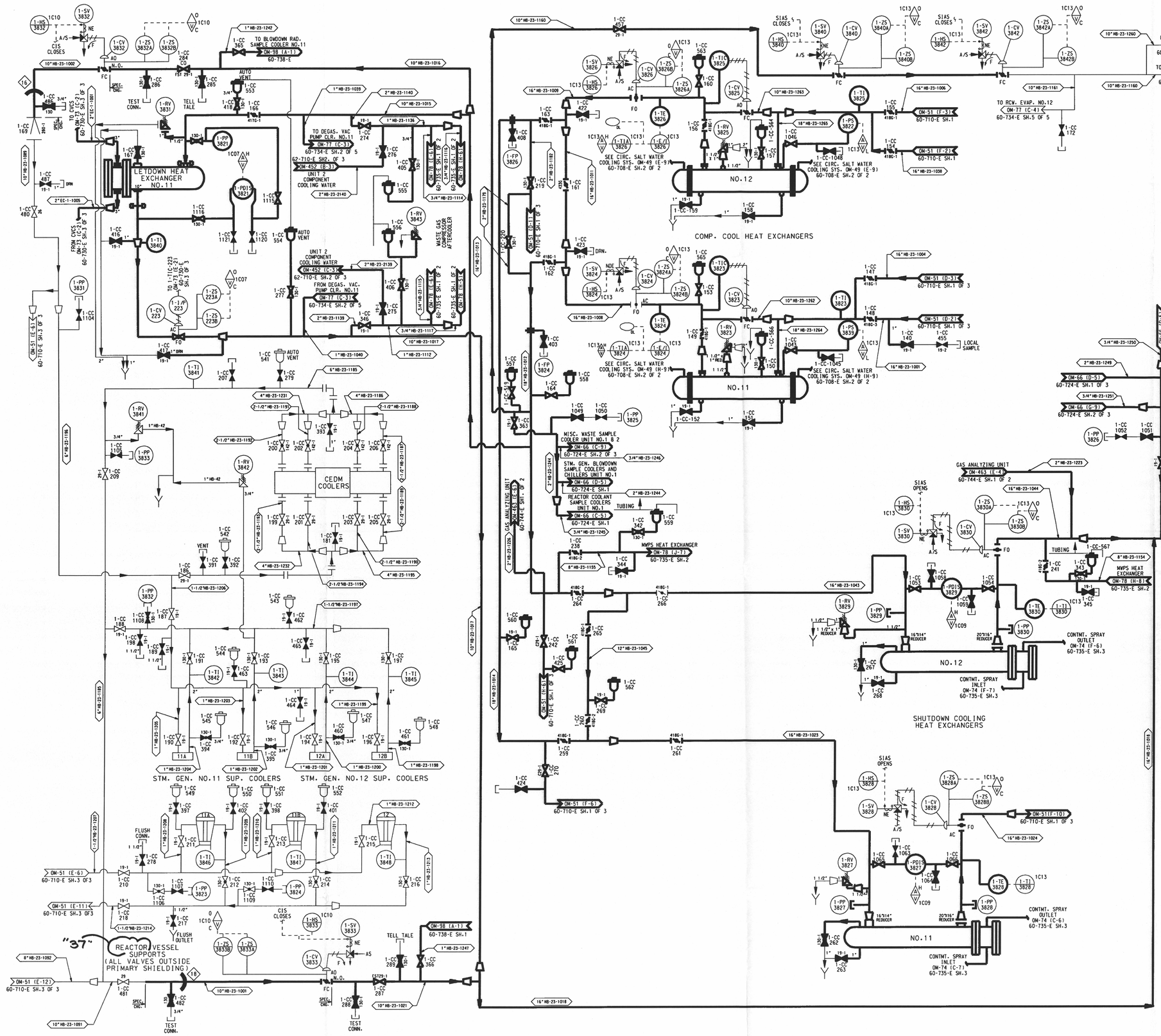

FOR GENERAL NOTES SEE DWG. 60-710-E SH.1

DRAWING NOTES

1. THE Q-LIST INFORMATION PROVIDED ON THIS DRAWING IDENTIFIES THE SAFETY RELATED PRESSURE BOUNDARIES (SR-PB). EQUIPMENT WITHIN THE BOUNDARIES IS ALSO CLASSIFIED SR-PB, AS A MINIMUM. THE NUCLEIS MASTER EQUIPMENT LIST MUST BE USED FOR IDENTIFYING SPECIFIC OR ADDITIONAL SAFETY CLASSIFICATION INFORMATION, INCLUDING COMPONENT CLASSIFICATIONS AND ASSOCIATED REQUIREMENTS.
2. PIPING WHICH CONTINUES BEYOND THE SAFETY RELATED (SR-PB) BOUNDARY INDICATED ON THIS DRAWING, IS CLASSIFIED SR-PB UP TO AND INCLUDING THE FIRST SEISMIC ANCHOR.
3. ——— DENOTES SAFETY RELATED PRESSURE BOUNDARIES.
   ——— DENOTES NON-SAFETY RELATED PRESSURE BOUNDARIES.

THIS DRAWING CREATED FROM OPERATIONS DRAWING 60-710-E SH.2 (OM-51), REV. 25, DATED 06-03-1994 & P&ID 60-235-E SH.2 (M-51), REV.22, DATED 06-03-1994.

REV	DATE	DESCRIPTION	DWN	DSGN	DE	IR	APPROVED
36		AS BUILT INFO ONLY ESP ES200000150-000					
37	11/96	ADMINISTRATIVE CHANGE ONLY ES199600058	RGL	—	—	—	GMS
32		AS BUILT INFO ONLY ESP ES199500003-000					
33		AS BUILT INFO ONLY ES199900741-000					
34		AS BUILT INFO ONLY ESP ES199600744-000					
35		AS BUILT INFO ONLY ES199901270-000					

DRAWN
DESIGNED
CIVIL ENGR.
ELECT. ENGR.
I & C ENGR.
MECH. ENGR.
I.R.
APPROVED
DATE

COMPONENT COOLING SYSTEM

BALTIMORE GAS AND ELECTRIC COMPANY
NUCLEAR ENGINEERING DEPARTMENT

CALVERT CLIFFS UNIT 1
ELECTRIC PRODUCTION PLANT

SIZE: E | CAT.: C

SCALE: NONE | VENDOR DWG. NO. OM-051SH0002 | REV.

INTER NO. 16712.DGN | DWG. NO. 60710SH0002 | 37

LEVELS 1234567891111111112222222223333333333444444444455555555556666 0123456789012345678901234567890123456789012345678901234567890123

LAST USER (JCH)
LAST DATE WORKED (04/01/00)