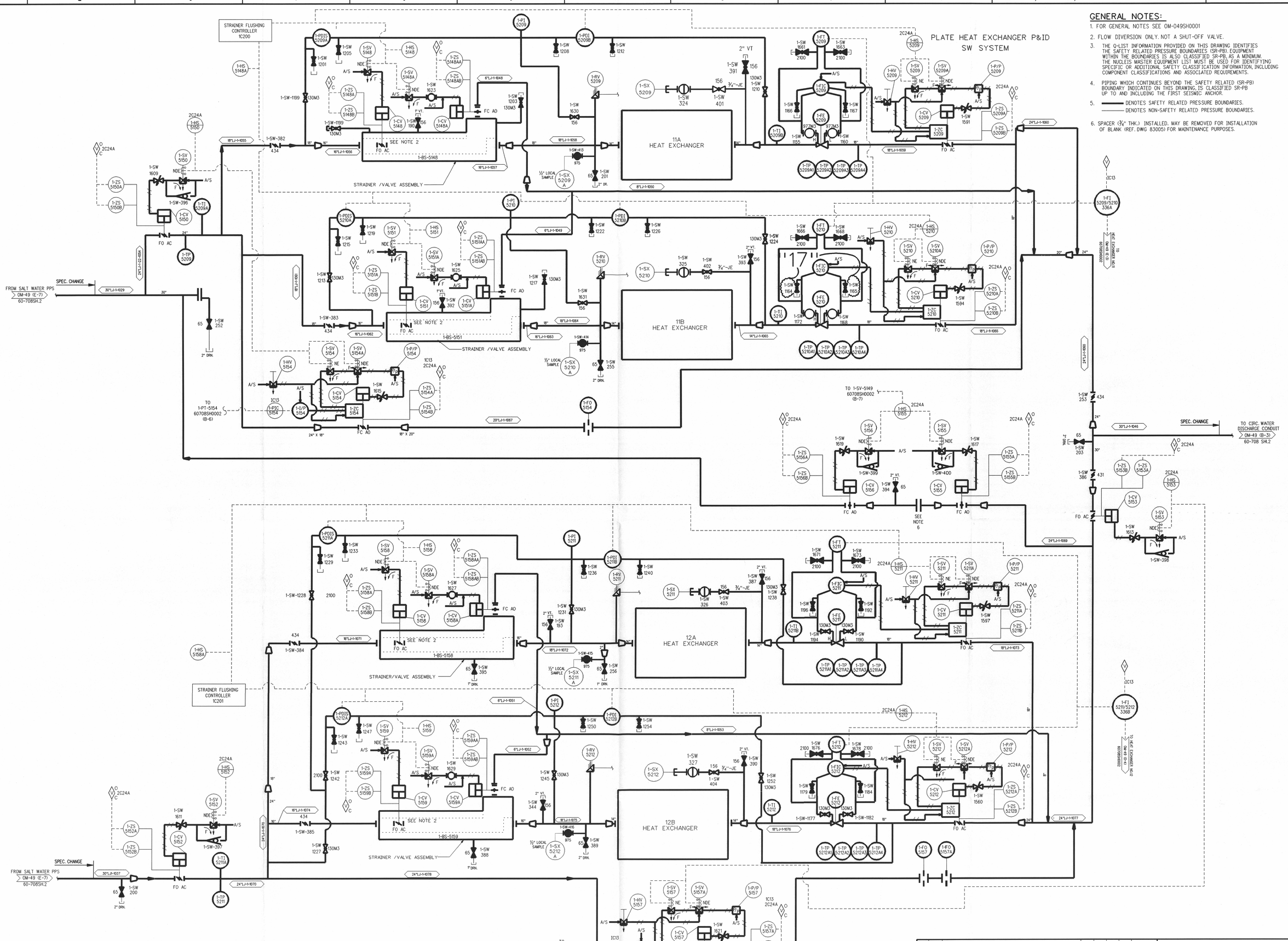

GENERAL NOTES:

1. FOR GENERAL NOTES SEE OM-049SH0001
2. FLOW DIVERSION ONLY. NOT A SHUT-OFF VALVE.
3. THE Q-LIST INFORMATION PROVIDED ON THIS DRAWING IDENTIFIES THE SAFETY RELATED PRESSURE BOUNDARIES (SR-PB). EQUIPMENT WITHIN THE BOUNDARIES IS ALSO CLASSIFIED SR-PB, AS A MINIMUM. THE NUCLEIS MASTER EQUIPMENT LIST MUST BE USED FOR IDENTIFYING SPECIFIC OR ADDITIONAL SAFETY CLASSIFICATION INFORMATION, INCLUDING COMPONENT CLASSIFICATIONS AND ASSOCIATED REQUIREMENTS.
4. PIPING WHICH CONTINUES BEYOND THE SAFETY RELATED (SR-PB) BOUNDARY INDICATED ON THIS DRAWING, IS CLASSIFIED SR-PB UP TO AND INCLUDING THE FIRST SEISMIC ANCHOR.
5. ——— DENOTES SAFETY RELATED PRESSURE BOUNDARIES.
   ——— DENOTES NON-SAFETY RELATED PRESSURE BOUNDARIES.
6. SPACER (3/4" THK.) INSTALLED. MAY BE REMOVED FOR INSTALLATION OF BLANK (REF. DWG 83005) FOR MAINTENANCE PURPOSES.

REV	DATE	DESCRIPTION	DWN	DSGN	DE	IR	APPROVED
13	6/5/03	AS BUILT DCN 60708SH0003-2008SH0001 REV.A ES200000229-000 & 60708SH0003-2012SH0001 ES200000971-001	WHR RKL	—	—	—	RKL
14	6/5/03	AS BUILT DCN 60708SH0003-2010SH0001 REV.A, -2011SH0001 REV.A ES200000229-000	WHR RKL	—	—	—	RKL
15	10/30/03	AS BUILT DCN 60708SH0003-2013SH0001 &2, -2014SH0001 ES200100442-000	WHR RKL	—	—	—	RKL
16	11/20/03	AS BUILT DCN 60708SH0003-2013SH0003 & 4, -2014SH0002 ES200100442-000	WHR RKL	—	—	—	RKL
17	6/7/04	AS BUILT DCN 60708SH0003-2012SH0002 ES200000971-001	WHR RKL	—	—	—	RKL

CIRCULATING SALT WATER COOLING SYSTEM

CALVERT CLIFFS NUCLEAR POWER PLANT
ENGINEERING SERVICES DEPARTMENT
CALVERT CLIFFS UNIT 1

SIZE E | CAT. C

SCALE: NONE | VENDOR DWG. NO. OM-049SH0003 | REV. 17

DWG. NO. 60708SH0003

D-07