Westinghouse

Westinghouse Electric Company
Nuclear Power Plants
P.O. Box 355
Pittsburgh, Pennsylvania 15230-0355
USA

U.S. Nuclear Regulatory Commission
ATTENTION: Document Control Desk
Washington, D.C. 20555

Direct tel: 412-374-6306
Direct fax: 412-374-5005
e-mail: sterdia@westinghouse.com

Your ref: Project Number 740
Our ref: DCP/NRC1957

July 12, 2007

Subject: AP1000 COL Responses to Requests for Additional Information (TR #86)

In support of Combined License application pre-application activities, Westinghouse is submitting responses to NRC requests for additional information (RAI) on AP1000 Standard Combined License Technical Report 86, APP-GW-GLN-018, Rev. 0, Alternate Steam and Power Conversion Design. These RAI responses are submitted as part of the NuStart Bellefonte COL Project (NRC Project Number 740). The information included in the responses is generic and is expected to apply to all COL applications referencing the AP1000 Design Certification.

The responses are provided for requests for additional information RAI-TR86-CIB2-01 Rev. 0 and RAI TR86-CIB2-02 Rev. 0, transmitted in an email from David Jaffe to Sam Adams, dated May 31, 2007.

Pursuant to 10 CFR 50.30(b), the responses to requests for additional information on Technical Report 86 is submitted as Enclosure 1 under the attached Oath of Affirmation.

Questions or requests for additional information related to the content and preparation of these responses should be directed to Westinghouse. Please send copies of such questions or requests to the prospective applicants for combined licenses referencing the AP1000 Design Certification. A representative for each applicant is included on the cc: list of this letter.

Very truly yours,

A. Sterdis, Manager
Licensing and Customer Interface
Regulatory Affairs and Standardization

00197psa.doc

D079
D063
NRO

/Attachment

1. "Oath of Affirmation," dated July 12, 2007

/Enclosure

1. Responses to Requests for Additional Information on Technical Report No. 86

| | | | | | |
|---|---|---|---|---|---|
| cc: | D. Jaffe | - | U.S. NRC | 1E | 1A |
| | E. McKenna | - | U.S. NRC | 1E | 1A |
| | S. Adams | - | Westinghouse | 1E | 1A |
| | G. Curtis | - | TVA | 1E | 1A |
| | P. Grendys | - | Westinghouse | 1E | 1A |
| | P. Hastings | - | Duke Power | 1E | 1A |
| | C. Ionescu | - | Progress Energy | 1E | 1A |
| | D. Lindgren | - | Westinghouse | 1E | 1A |
| | A. Monroe | - | SCANA | 1E | 1A |
| | M. Moran | - | Florida Power & Light | 1E | 1A |
| | C. Pierce | - | Southern Company | 1E | 1A |
| | E. Schmiech | - | Westinghouse | 1E | 1A |
| | G. Zinke | - | NuStart/Entergy | 1E | 1A |
| | K. Schwab | - | Westinghouse | 1E | 1A |

ATTACHMENT 1

"Oath of Affirmation"

ATTACHMENT 1

UNITED STATES OF AMERICA

NUCLEAR REGULATORY COMMISSION

| | |
|---|---|
| In the Matter of: | ) |
| NuStart Bellefonte COL Project | ) |
| NRC Project Number 740 | ) |

APPLICATION FOR REVIEW OF
"AP1000 GENERAL COMBINED LICENSE INFORMATION"
FOR COL APPLICATION PRE-APPLICATION REVIEW

W. E. Cummins, being duly sworn, states that he is Vice President, Regulatory Affairs & Standardization, for Westinghouse Electric Company; that he is authorized on the part of said company to sign and file with the Nuclear Regulatory Commission this document; that all statements made and matters set forth therein are true and correct to the best of his knowledge, information and belief.

W. E. Cummins
Vice President
Regulatory Affairs & Standardization

Subscribed and sworn to
before me this 12th day
of July 2007.

COMMONWEALTH OF PENNSYLVANIA
Notarial Seal
Debra McCarthy, Notary Public
Monroeville Boro, Allegheny County
My Commission Expires Aug. 31, 2009
Member, Pennsylvania Association of Notaries

Debra McCarthy
Notary Public

ENCLOSURE 1

Responses to Requests for Additional Information on Technical Report No. 86

# AP1000 TECHNICAL REPORT REVIEW

## Response to Request For Additional Information (RAI)

RAI Response Number: RAI-TR86-CIB2-01
Revision: 0

***Question:***

*On page 31 of your technical report (Section 10A.2.3.6), you stated that the methodology for analysis of the probability of generation of missiles for fully integral rotors was submitted in WCAP-16650-P. Please provide a copy of this reference to validate its applicability to the Toshiba design.*

**Westinghouse Response:**

WCAP-16650-P was submitted to the NRC under Westinghouse letter DCP/NRC1889 dated May 16, 2007.

Reference:

1. WCAP-16650-P, Revision 0, Analysis of the Probability of the Generation of Missiles from Fully Integral Nuclear Low Pressure Turbines
2. APP-GW-GLN-018, Revision 0, "Alternate Steam and Power Conversion Design," (Technical Report Number 86)

**Design Control Document (DCD) Revision:**
None

**PRA Revision:**
None

**Technical Report (TR) Revision:**
None

# AP1000 TECHNICAL REPORT REVIEW

## Response to Request For Additional Information (RAI)

RAI Response Number: RAI-TR86-CIB2-02
Revision: 0

***Question:***

On page 31 of your technical report, you stated that ultrasonic inspection of the outer dovetail and the bucket pin is conducted. Please provide a sketch of the rotor showing the locations of the outer dovetail and the bucket pins.

**Westinghouse Response:**

Two types of fixations of the buckets (blades) will be adopted for the AP1000 standard turbine: an outside dovetail type and a fork type dovetail. Table 1 shows the type of fixation by each stage of the HP and LP turbine sections.

**Table 1 Fixation Type of the Buckets at each Stage**

| | HP Turbine | | | | | | | |
|---|---|---|---|---|---|---|---|---|
| **Stage Number** | 1 | 2 | 3 | 4 | 5 | 6 | 7 | 8 (LSB) |
| **Fixation Type** | D | D | D | D | D | D | D | D |

| | LP Turbine | | | | | | | |
|---|---|---|---|---|---|---|---|---|
| **Stage Number** | 1 | 2 | 3 | 4 | 5 | 6 | 7 | 8 (LSB) |
| **Fixation Type** | D | D | D | D | D | D | F | F |

(D = Outside dovetail fixation F = Fork type fixation LSB = Last Stage Blade)

Figures 1-1 and 1-2 show cross sectional views of the HP turbine and LP turbine, respectively. The colored portions are the fixation of the rotor and the buckets. The locations of the outside dovetail are colored with red and of the fork type fixations are colored with blue. Figure 2 shows the detail of the fixations.

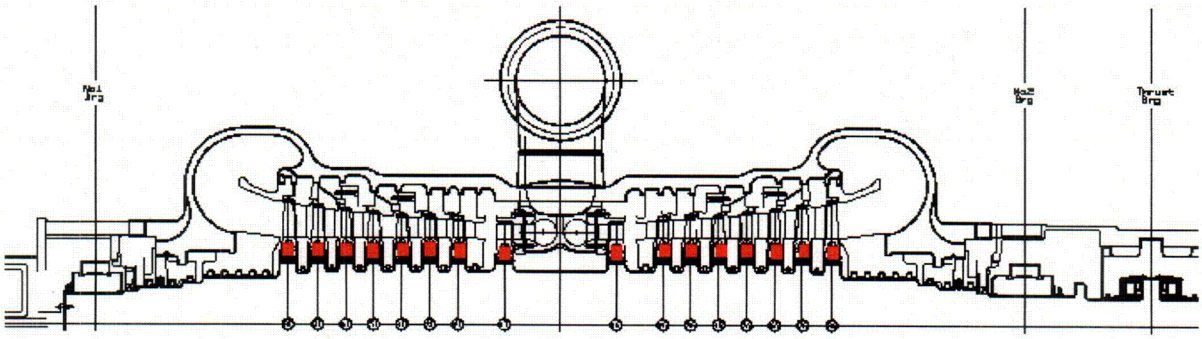

Figure 1-1 Cross Section View of the HP Turbine

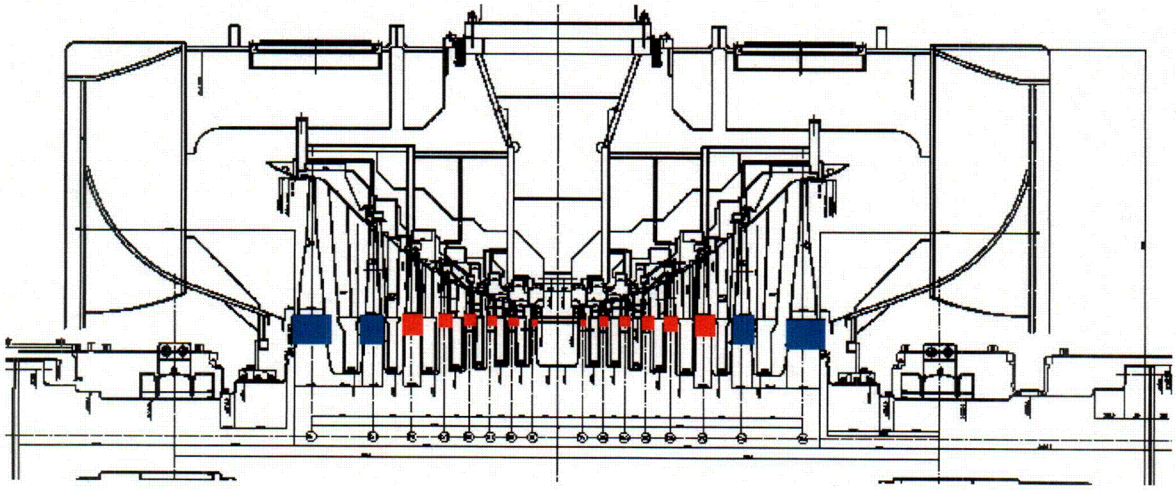

Figure 1-2 Cross Section View of the LP Turbine

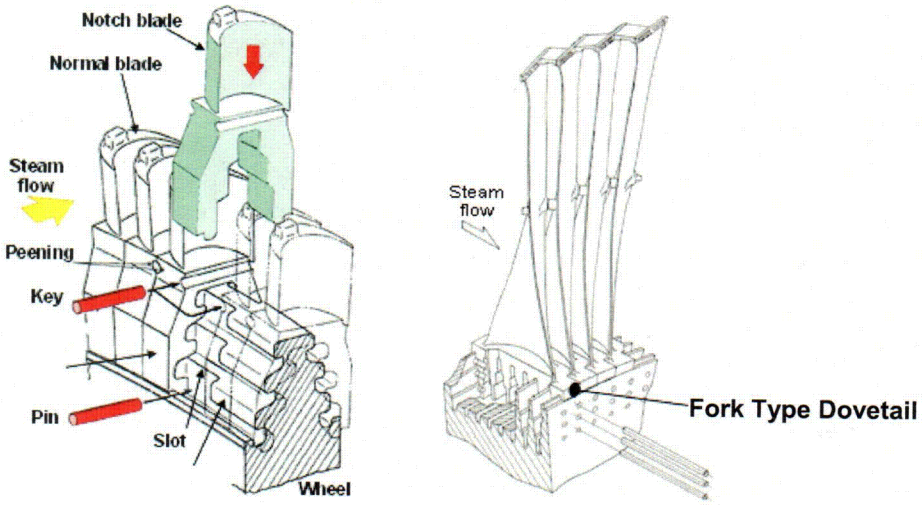


**Outside dovetail** **Fork type dovetail**

**Figure 2 Outside Dovetail and Fork Type Dovetail**

Reference:

1. WCAP-16650-P, Revision 0, Analysis of the Probability of the Generation of Missiles from Fully Integral Nuclear Low Pressure Turbines
2. APP-GW-GLN-018, Revision 0, "Alternate Steam and Power Conversion Design," (Technical Report Number 86)

**Design Control Document (DCD) Revision:**
None

**PRA Revision:**
None

**Technical Report (TR) Revision:**
None