Draft Submittal

(Pink Paper)

McGuire 2007-301

March 29, 2007

Reactor Operator Operator Written Exam

Examination Outline Cross-reference:	Level	RO	SRO
	Tier #	2	
	Group #	1	
	K/A #	003 A4.05	
	Importance Rating	3.1	

Ability to manually operate and/or monitor in the control room: RCP seal leakage detection instrumentation

Proposed Question: Common 1

The following conditions exist:

- "1A NC Pump Seal Leakoff Hi" has been increasing slowly and is now 6.5 gpm.
- "1A NC Pump L/B Temp" is 200 degrees.
- "1A NC Pump Seal Outlet Temp" is 212 degrees.
- "1A" NC Pump Seal D/P is off scale high.
- "1A" NC Pump Standpipe high level alarm is dark.
- The plant is at 50% RTP.

Which ONE (1) of the following describes the status of 1A NC Pump seals and the actions that must be taken concerning the 1A NC Pump as a result of these conditions?

A. #2 seal has failed. Initiate a plant shutdown to Mode 3. When reactor trip breakers are open, trip 1A NC Pump.

B. #1 seal has failed. Initiate a plant shutdown to Mode 3. When reactor trip breakers are open, trip 1A NC Pump.

C. #2 seal has failed. Trip the reactor and then trip 1A NC Pump. Isolate seal return within 3 to 5 minutes.

D. #1 seal has failed. Trip the reactor and then trip 1A NC Pump. Isolate seal return within 3 to 5 minutes.

Proposed Answer: D

Explanation (Optional):

A is incorrect. #2 seal failure would have low leakoff from #1 seal and possible standpipe level alarm. With seal leakoff >6 GPM, NC Pump must be tripped. If in Mode 1, must trip reactor first

B is incorrect. Actions are incorrect for a failure of #1 seal. Would trip the unit instead of shutting down

C is incorrect. Wrong seal, correct action

D is correct

Technical Reference(s): AP/1/A/5500/008 (Attach if not previously provided)

PS-NC, pg 29

Proposed references to be provided to applicants during examination: None

Learning Objective: PS-NCP-15 (As available)

Question Source: Bank # _____

Modified Bank # _____ (Note changes or attach parent)

New X

Question History: Last NRC Exam _____

Question Cognitive Level: Memory or Fundamental Knowledge _____

Comprehension or Analysis X

10 CFR Part 55 Content: 55.41 3

55.43 _____

Comments:

OBJECTIVES

	OBJECTIVE	NLO	NLOR	LPRO	LPSO	LOR
8	Describe the controls and any interlocks associated with the Reactor Coolant Pump and Motor.	X	X	X	X	X
9	Given a parameter associated with the Reactor Coolant Pumps or Motors describe the indications for that parameter.			X	X	X
10	Given a limit and/or precaution associated with an operating procedure, discuss its basis and applicability.			X	X	X
11	Explain the reason for closing the NC Pump Seal Return valves when NCS pressure is below 100 psi.		X	X	X	X
12	Concerning the NC Pump seals: • Describe the general design of the NC Pump Seals. • Discuss the purpose of seal injection. • Discuss the flowpaths, flowrates and differential pressures associated with each seal. • Discuss the purpose of the seal injection throttle valves. • Discuss the purpose of the standpipes and the operation of the standpipe (draining and filling).	X	X	X	X	X
13	Describe the operation for adjusting NC Pump seal controlled leakage.		X	X	X	X
14	Concerning NC Pump Vibration Monitoring System:					
	• State the purpose of the system.			X	X	
	• Discuss the operation of the system.			X	X	X
15	State the parameters and setpoints which would require an NC Pump to be stopped.			X	X	X

Objective #11, 12

Each of the NC Pump No. 1 seal leakoff lines have seal return isolation valves. These valves are closed when NC System pressure is less than 100 psig in order to prevent any backflow from the NV System through the seal return filter to the NC Pump seals. Backflow would flush any contaminants/particulates out of the filter and into the seal.

These isolation valves are also used in the event of a failure (excessive leakage) of the No. 1 seal. When No. 1 seal leakoff flow is high, some of this flow comes from the NC System up through the thermal barrier. There may be insufficient heat removal by the thermal barrier heat exchanger to adequately cool the leakoff flow. This hotter water could cause damage to the No. 2 and 3 seals. When the seal return valve is closed, the No. 2 seal becomes the primary seal and maintains the large ΔP. The No. 2 seal is designed to withstand this high ΔP for a short period and the pump must be stopped within 5 minutes (per ESBU-TB-93-01-R1) and the plant must be cooled down and depressurized so that repairs can be made.

The NC Pumps are equipped with a common No. 1 seal bypass valve. This valve is only opened at low system pressures (100-1000 psig) when there is insufficient flow to adequately cool the seal (leakoff temperature >200°F).

The leakoff from each pump is piped to a common manifold and then via a seal water filter through a seal water heat exchanger where the temperature is reduced to about that of the VCT. Leakage past the No. 1 seal provides a constant pressure on the No. 2 seal and constant pressure on the No. 3 seal. A standpipe is provided to assure a backpressure of at least 7 feet of water on the No. 3 seal. In addition, the standpipe is used to warn of excessive No. 2 seal leakage flow to the reactor coolant drain tank (NCDT). Excessive No. 2 seal leakage results in a rise in the standpipe level and eventual overflow to the NCDT via a second overflow connection.

A total of 8 gpm is supplied to each NC pump for seal injection water. 5 gpm is directed down through the thermal barrier labyrinth seal and into the NC System. 3 gpm flows up through the lower radial bearing.

A minimum differential pressure of 200 psid is required at low NC System pressure (see 7.6) across the No. 1 seal surfaces to ensure proper water film during pump operation. For an NCP start at normal system pressure, there must be approximately 1 gpm seal leakoff flow for 2200 psid. The inlet pressure is approximately 2250 psig (NC System pressure) and the outlet pressure is 15-50 psig (VCT pressure) during normal operation. Approximately 3 gpm leaks off from the No. 1 seal of which 3 gph flows to the No. 2 seal. Proper VCT pressure is required to ensure adequate backpressure for proper flow through the No. 2 seal.

Objective #12

Approximately 3 gph is directed through the No. 2 seal. The pressure drops from 50 psig to 3 psig across this seal. All the No. 2 seal leakoff, except for 100 cc/hr, is directed to a standpipe. The water level in the standpipe is maintained to provide sufficient backpressure on the No. 2 seal to ensure flow through the No. 3 seal. All excess water from the standpipe is discharged to the NCDT through an orifice. Improper standpipe level can adversely affect seal operation, therefore there is a high

ACTION/EXPECTED RESPONSE	RESPONSE NOT OBTAINED

B. Symptoms

- **NC pump number 1 seal leakoff flow going up**
- **NC pump number 1 seal leakoff flow going down**
- **NC pump number 1 seal outlet temperature going up**
- **NC pump lower bearing temperature going up**
- **"NC PMP NO. 1 SEAL LO D/P" alarm.**

C. Operator Actions

1. **Check NC pump parameters within operating limits:**

   __ • All NC pump lower bearing temperatures - LESS THAN 225°F

   __ • All NC pump number 1 seal outlet temperatures - LESS THAN 235°F

   __ • All NC pump number 1 seal D/Ps - GREATER THAN 200 PSID.

__ 2. **IF AT ANY TIME any operating limit exceeded, THEN GO TO Step 4.**

__ 3. **GO TO Step 5.**

4. **Stop affected NC pump as follows:**

   a. **IF** A or B NC pump is the affected pump, **THEN** close associated spray valve:

   __ • 1NC-27 (A Loop PZR Spray Control)

   __ • 1NC-29 (B Loop PZR Spray Control).

   __ b. Check all NC pump number 1 seal leakoff flows - LESS THAN 6 GPM.

   __ b. Observe Caution prior to Step 4.e and **GO TO** Step 4.e.

__ **IF trip criteria valid, THEN GO TO Step 4.**

ACTION/EXPECTED RESPONSE	RESPONSE NOT OBTAINED
4. (Continued)	
__ c. Check all NC pump number 1 seal leakoff flows - GREATER THAN 0.8 GPM.	__ c. **IF** NC pressure greater than 2000 PSIG, **THEN** observe Caution prior to Step 4.e and **GO TO** Step 4.e.
__ d. **GO TO** Step 4.f.	
CAUTION **Enclosure 1 (NC Pump Post Trip Actions) contains time critical actions that must be performed between 3 minutes and 5 minutes after stopping NC pump. This enclosure must be performed even after transition to EPs.**	
__ e. Have any available RO perform Enclosure 1 (NC Pump Post Trip Actions) as crew performs the following steps.	
__ f. Check unit status - IN MODE 1 OR 2.	f. Perform the following: __ 1) Stop the affected NC pump. 2) **IF** all NC pumps are off, **THEN** perform the following: __ a) Secure any boron dilution in progress. __ b) **IF** in Mode 3, **THEN** immediately open Reactor Trip Breakers. c) **IF** the step above results in rods dropping **AND** Pzr pressure is above P-11, **THEN**: __ (1) Continue with this AP as time allows. __ (2) **GO TO** EP/1/A/5000/E-0 (Reactor Trip or Safety Injection). __ 3) **GO TO** Step 5.

ACTION/EXPECTED RESPONSE	RESPONSE NOT OBTAINED
4. (Continued)	
__ g. Trip reactor.	
__ h. Stop affected NC pump.	
__ i. Continue with this AP as time allows.	
__ j. **GO TO** EP/1/A/5000/E-0 (Reactor Trip or Safety Injection).	
5. **Check if seal cooling available to affected pump:**	**Perform the following:**
__ • Seal injection established (Normal or SSF supply)	a. Close one of the following:
OR	__ • 1NV-94AC (NC Pumps Seal Ret Cont Inside Isol)
__ • KC to thermal barrier established.	OR
	__ • 1NV-95B (NC Pumps Seal Ret Cont Outside Isol).
	__ b. **IF AT ANY TIME** seal cooling is restored, **THEN** observe Note prior to Step 6 and **GO TO** Step 6.
	__ c. **RETURN TO** Step 1.

ACTION/EXPECTED RESPONSE	RESPONSE NOT OBTAINED

NOTE Up to 24 hours of NC pump operation may be required before seals seat and operate normally after seal maintenance or startup.

__ 6. **Check any NC pump number 1 seal leakoff - GREATER THAN OR EQUAL TO 6 GPM.**	**Perform the following:**
	NOTE OP/1/A/6200/001B (Chemical and Volume Control System Charging), Enclosure 4.10 (Maintaining NC Pump Seal Leakoff) gives guidance on actions used to change seal leakoff flow.
	__ a. **IF** seal leakoff slowly going up, **THEN** contact station management for further guidance.
	__ b. Continue to monitor NC pump seal leakoff flow.
	__ c. **IF AT ANY TIME** seal leakoff flow goes up to 6 GPM, **THEN GO TO** Step 7.
	__ d. **GO TO** Step 8.
7. **Stop affected NC pump as follows:**	
a. **IF** A or B NC pump is the affected pump, **THEN** close associated spray valve:	
__ • 1NC-27 (A Loop PZR Spray Control)	
__ • 1NC-29 (B Loop PZR Spray Control).	

ACTION/EXPECTED RESPONSE	RESPONSE NOT OBTAINED

7. (Continued)

CAUTION **Enclosure 1 (NC Pump Post Trip Actions) contains time critical actions that must be performed between 3 minutes and 5 minutes after stopping NC pump. This enclosure must be performed even after transition to EPs.**

__ b. Have any available RO perform Enclosure 1 (NC Pump Post Trip Actions) as crew performs the following steps.

__ c. Check unit status - IN MODE 1 OR 2.

c. Perform the following:

__ 1) Stop affected NC pump.

2) **IF** all NC pumps are off, **THEN** perform the following:

__ a) Secure any boron dilution in progress.

__ b) **IF** in Mode 3, **THEN** immediately open Reactor Trip Breakers.

c) **IF** the step above results in rods dropping **AND** Pzr pressure is above P-11, **THEN**:

__ (1) Continue with this AP as time allows.

__ (2) **GO TO** EP/1/A/5000/E-0 (Reactor Trip or Safety Injection).

__ 3) Do not continue until affected NC pump seal return valve is closed in Enclosure 1 (NC Pump Post Trip Actions).

__ 4) **GO TO** Step 15.

__ d. Trip reactor.

__ e. Stop affected NC pump.

__ f. Continue with this AP as time allows.

__ g. **GO TO** EP/1/A/5000/E-0 (Reactor Trip or Safety Injection).

ACTION/EXPECTED RESPONSE	RESPONSE NOT OBTAINED

CAUTION **Failure of Number 2 and 3 seals may occur unless the affected NC pump seal return valve is closed between 3 minutes and 5 minutes after stopping pump. This enclosure must be completed even after transition to EPs.**

__ 1. **Record time of NC pump shutdown:**

_____

2. **Check if seal cooling available to affected pump:**

__ • Seal injection established (Normal or SSF Supply)

OR

__ • KC to thermal barrier established.

Perform the following:

a. Close the following:

__ • 1NV-94AC (NC Pumps Seal Ret Cont Inside Isol)

__ • 1NV-95B (NC Pumps Seal Ret Cont Outside Isol).

__ b. Exit this enclosure.

__ 3. **Check any NC pump number 1 seal leakoff flow - GREATER THAN OR EQUAL TO 6 GPM.**

__ **GO TO Step 5.**

__ 4. **Maintain seal injection flow greater than 9 GPM to affected pump(s).**

ACTION/EXPECTED RESPONSE	RESPONSE NOT OBTAINED
5. **<u>WHEN</u> affected NC pump has been off 3 minutes, <u>THEN</u> immediately perform the following:** a. Close <u>affected</u> NC pump seal return valve: __ • 1NV-34A (A NC Pump Seal Return Isol) __ • 1NV-50B (B NC Pump Seal Return Isol) __ • 1NV-66A (C NC Pump Seal Return Isol) __ • 1NV-82B (D NC Pump Seal Return Isol). b. Open <u>all</u> of the following valves: __ • 1KC-394A (A NC Pump Therm Bar Otlt) __ • 1KC-345A (C NC Pump Therm Bar Otlt) __ • 1KC-364B (B NC Pump Therm Bar Otlt) __ • 1KC-413B (D NC Pump Therm Bar Otlt).	

Examination Outline Cross-reference:	Level	RO	SRO
	Tier #	2	
	Group #	1	
	K/A #	003 K1.01	
	Importance Rating	2.6	

Knowledge of the physical connections and/or cause-effect relationships between the RCPS and the following systems: RCP lube oil

Proposed Question: Common 2

Which ONE (1) of the following describes an interlock that will prevent 1A NC Pump from starting when its control switch is placed in START?

A. #1 Seal DP 190 psig.

B. #1 Seal Leakoff rate 7.2 gpm.

C. Oil Lift pressure is 550 psig.

D. Oil Lift Pump operating for less than 1 minute.

Proposed Answer: C

Explanation (Optional):
C is correct. Lift pressure less than 600 psig is an interlock preventing NC Pump start
A is incorrect. Seal DP >200 psid is an administrative restriction on starting the NC Pump
B is incorrect. Seal Leakoff >6 GPM is NC Pump trip criteria
D is incorrect. Oil Lift Pump will automatically trip after NC Pump is operating for 1 minute

Technical Reference(s): PS-NCP (Attach if not previously provided)

Proposed references to be provided to applicants during examination: None

Learning Objective: PS-NCP-6 (As available)

Question Source: Bank #
Modified Bank # (Note changes or attach parent)
New X

Question History: Last NRC Exam _____

Question Cognitive Level: Memory or Fundamental Knowledge X
Comprehension or Analysis _____

10 CFR Part 55 Content: 55.41 3
55.43 _____

Comments:

CLASSROOM TIME (Hours)

NLO	NLOR	LPRO	LPSO	LOR
2.0	2.0	3.0	3.0	

OBJECTIVES

	OBJECTIVE	NLO	NLOR	LPRO	LPSO	LOR
1	Concerning the Reactor Coolant Pumps/Motors: • State the purpose of the Reactor Coolant Pump. • State the purpose of the motor flywheel. • State the purpose of the NC Pump thermal barrier and heat exchanger. • State the purpose of the NC Pump Motor Oil Lift System. • State the purpose of the NC Pump seals.	X	X	X	X	
2	Discuss the basic operation of the Anti Reverse Rotation Device associated with each motor.	X	X	X	X	
3	Describe two reasons for using an Anti Reverse Rotation Device on a NC Pump.		X	X	X	X
4	Discuss any operational concerns with: • Loss of Thermal Barrier Heat Exchanger flow while maintaining Seal Injection flow • Loss of Seal Injection flow while maintaining Thermal Barrier Heat Exchanger flow. • Loss of Seal Injection with a loss of Thermal Barrier Heat Exchanger flow.	X	X	X	X	X
5	Describe the operation of the Thrust Bearing including how it functions as a pump to move oil through the oil cooler.	X	X	X	X	
6	Concerning the Oil Lift Pumps: • Explain the normal start/stop operation • Describe what happens to the running Oil Lift Pump if the associated NCP failed to start? (Safety breaker re-opens)		X	X	X	X
7	Discuss the various cooling water supplies to the Reactor Coolant Pump and Motor and the origin of each supply.	X	X	X	X	

Objective # 8

The pumps are controlled by START/ STOP push-button switches located on the Main Control Board. The STOP button locks down to prevent inadvertent operation of the pump. The Oil Lift Pumps are powered from MXM and MXN.

The NC Pump will not start (safety breaker will not close) unless oil lift pressure on 2/3 pressure switches is greater than 600 psig. In addition to the three interlocking pressure switches providing 2/3 logic, there are 2 pressure switches, one for each oil lift pump, that provide an OAC indication when there is > 600 psig oil pressure for a motor start.

Other equipment is the upper oil coolers (cooled by KC), NC Pump motor oil drain tanks, and the NC Pump motor oil drain tank pump.

The NC pump motor drain tanks are no longer used to drain oil for maintenance. They are used to collect oil in oil leak situations. They were originally sized to contain the combined oil volume of the upper oil pot, lower oil pot and associated piping and any leakage which could accumulate in the upper shroud or the motor air frame of the NC pump. The NC pump motor drain tank pump can transport the oil from the NC pump motor drain tanks to the waste oil storage tank where shipping facilities are available. The NC pump motor drain tank pumps are powered from MXN. The NC pump oil collection system is designed to withstand an SSE.

2.2 Hydraulics Section (Pump)

The hydraulic section consists of an impeller, diffuser, casing, thermal barrier, heat exchanger, radial bearing, main flange, motor stand, and pump shaft.

The impeller is attached to the bottom of the pump shaft. The reactor coolant is drawn up through the impeller, discharged through passages in the diffuser, and out through the discharge nozzle in the side of the casing. Above the impeller is a thermal barrier heat exchanger, a radial guide bearing and the pump seal section.

High pressure seal injection water (seal injection from the NV System) is introduced below the pump radial bearing. A portion of this water flows downward through the thermal barrier labyrinth and past the thermal barrier heat exchanger cooling coils (cooled by the KC System) and the remaining water flows upward by the radial bearing to the seals.

Objective #1

The **Thermal Barrier Heat Exchanger** is a coiled pancake-type heat exchanger located on the bottom of the thermal barrier. This heat exchanger is used to limit the heat transfer from the hot coolant to the radial bearing and seal area. A portion of the NC Pump seal injection flow passes down through the walls of the thermal barrier and across the thermal barrier heat exchanger. The fluid then enters the NC System by way of the pump. During normal operation, 40 gpm of water from the KC System is circulated through each pump's thermal barrier heat exchanger cooling coils.

Examination Outline Cross-reference:	Level	RO	SRO
	Tier #	2	
	Group #	1	
	K/A #	004 K2.02	
	Importance Rating	2.9	

Knowledge of bus power supplies to the following: Makeup pumps

Proposed Question: Common 3

Which ONE (1) of the following describes the power supply to Boric Acid Transfer Pump "A" on Unit 1?

A. 1ETA

B. 1EMXA

C. 1MXJ

D. 1MXK

Proposed Answer: B

Explanation (Optional):
A is incorrect. Credible because it provides power to Centrifugal Charging Pumps
B is correct.
C is incorrect. Credible because it provides power to CCP A Aux Lube Oil Pump
D is incorrect. Credible because it provides power to PD Pump

Technical Reference(s): PS-NV Section 2.24 (Attach if not previously provided)

Proposed references to be provided to applicants during examination: None

Learning Objective: None (As available)

Question Source: Bank #

Modified Bank # (Note changes or attach parent)

New X

Question History: Last NRC Exam _____

Question Cognitive Level: Memory or Fundamental Knowledge X
Comprehension or Analysis _____

10 CFR Part 55 Content: 55.41 6
55.43 _____

Comments:

VCT Makeup Valve(s) auto close on a BA Flow Deviation or Total Blend Deviation.

NV-137A will modulate to Recycle Holdup Tank (RHT) on high level (NVLT 5760) and if modulating channel fails it will fully divert to RHT (NVLT 5761) on high level.

NV-221A, 222B auto open on LoLo VCT Level (2/2 channels at 4%) or S_S signal.

NV-141A, 142B auto close on a S_S signal or LoLo VCT level on 2/2 channels if the train related FWST Suction Valve (NV-221A, 222B) is open or intermediate.

NV-94A, 95B auto close on a Phase "A" signal (S_t).

NV-244A, 245B auto close on an S_S signal.

To start the PD Pump

- **The recirc valve NV1047 must be open.**
- **Aux. Bldg nonessential header isolation (RN42) must be open.**

The PD Pump Recirc valve NV1047 will close 2 minutes after pump start.

NI-9A and 10B auto open on an S_s signal.

2.24 Power Supplies

2.24.1 Unit 1

Objective # 12

Pump Motors

Centrifugal Charging Pump A ..... 1ETA Compt. 10

Centrifugal Charging Pump B ..... 1ETB Compt. 10

Boric Acid Transfer Pump A ..... 1EMXA Compt. F1B

Boric Acid Transfer Pump B ..... 1EMXB Compt. 4E

Reciprocating Charging Pump..... 1MXK Compt. F2C

CC Pump A Aux. Lube Oil Pump..... 1MXJ Compt. 5A

CC Pump B Aux. Lube Oil Pump..... 1MXK Compt. R1B

Boric Acid Batching Tank Agitator..... SMXB Compt. F2C

Examination Outline Cross-reference:	Level	RO	SRO
	Tier #	2	
	Group #	1	
	K/A #	005 A1.01	
	Importance Rating	3.5	

Ability to predict and/or monitor changes in parameters (to prevent exceeding design limits) associated with operating the RHRS controls including: Heatup/cooldown rates

Proposed Question: Common 4

Given the following conditions:

- Both trains of residual heat removal (ND) are in service.
- ND heat exchanger outlet valves are throttled to 2000 gpm each.
- NC Cooldown rate is 25 degrees F per hour.
- The instrument air line to Train "B" ND heat exchanger outlet valve breaks off.

Which ONE (1) of the following would represent the **INITIAL** ND System response to this event?

	Total System Flow	Cooldown rate
A.	Goes UP	Goes UP
B.	Goes DOWN	Goes UP
C.	Goes DOWN	Goes DOWN
D.	Goes UP	Goes DOWN

Proposed Answer: A

Explanation (Optional):
A. Correct: ND HX outlet valves fail open on loss of air. Since the valve fails open, more flow will go through the ND Heat Exchanger. Cooldown rate will go up because a higher percentage of ND flow is going through the heat exchanger
B. Incorrect: Flow would go down if the valve failed closed, but cooldown rate does go up. Credible if applicant misunderstands failure mode and location of valve
C. Incorrect: Credible because applicant can misunderstand the failure mode of the valve. If valve did fail closed, cooldown rate would go down.
D. Incorrect: Credible because flow does increase, and if applicant misunderstands location of valve, could assume that cooldown rate goes down.

Technical Reference(s): PS-ND, pg 23, 25 (Attach if not previously provided)

Proposed references to be provided to applicants during examination: None

Learning Objective: PS-ND-5 (As available)

Question Source: Bank # X
Modified Bank # _____ (Note changes or attach parent)
New _____

Question History: Last NRC Exam Catawba 2005

Question Cognitive Level: Memory or Fundamental Knowledge _____
Comprehension or Analysis X

10 CFR Part 55 Content: 55.41 3
55.43 _____

Comments:

CLASSROOM TIME (Hours)

NLO	NLOR	LPRO	LPSO	LOR
2	2	2	2	1.5

OBJECTIVES

	OBJECTIVE	NLO	NLOR	LPRO	LPSO	LOR
1	Explain the purpose of the ND System. PSND001	X	X	X	X	
2	Sketch the ND System reflecting all major components and interconnections to associated systems (NC, NI, NS) per Drawing 7.1. PSND002	X	X	X	X	
3	Describe the instrumentation and alarms associated with the ND System. PSND003		X	X	X	X
4	List the power supplies for the ND pumps. PSND004	X	X	X	X	
5	Describe the operation of the following ND valves: • ND1B(2AC) - C Loop to ND Pump • ND4B (19A) - B(A) ND Pump Suction from FWST or NC • ND67B (68A) - B(A) ND Pump and B(A) ND HX Mini-Flow • ND15B (30A) - Train B(A) ND to Hot Leg Isolation • ND35 - ND System to FWST Isolation. PSND005		X	X	X	X
6	Explain overpressure protection for the ND System. PSND006		X	X	X	X
7	Explain the interlocks associated with the emergency auto-swap of ND pump suctions to the containment sump during an accident. PSND007	X	X	X	X	X

The normal system configuration is to remove power from ND-1B and ND-2AC after the Unit has reached Mode 5 during shutdown (while performing OP/1or 2/A/6100/SD-12, Cooldown to 100^{0}F). Maintaining power during Mode 4 allows the ND suction isolation valves to be operated from the control room while the NC system is a high energy system and ND piping has high thermal stresses, minimizing shutdown LOCA risk. Power is removed from the valves in Mode 5 to minimize the risk of a loss of ND event due to spurious valve movement. During plant startup, power is removed from ND-1B and ND-2AC after the unit has entered Mode 4 but prior to 350^{0}F while performing OP/1or 2/A/6100/SU-14 (Removing ND from Service).

The **OPERABILITY** requirements for these valves can be found in the DBD.

2.3.2 ND-4B (B ND Pump Suction From FWST Or NC) and ND-19A (A ND Pump Suction From FWST Or NC)

Objective #5

These valves are controlled from MC11 by open/close pushbuttons. They will auto close when their train related containment sump isolation valve fully opens (NI-184B and NI-185A). This interlock is designed to prevent the FWST from being drained to the containment sump.

ND-4B is interlocked so that it can not be opened unless the following valves are closed:

- **NS-38B (B ND to NS Cont. Outside Isol.) prevents NCS coolant from being pumped to the containment spray ring.**
- **NI-136B (B NI Pump Suction From ND) prevents NI system suction from being overpressurized**
- **NI-184B (RB Sump to Train B ND & NS) prevents FWST from being drained to the containment sump**
- **NS-1B (B NS Suct. From Cont Sump) prevents the NS System suction from being overpressurized.**

ND-19A is interlocked so that it cannot be opened unless the following valves are closed:

- **NS-43A (A ND to NS Cont. Outside Isol.) prevents NCS coolant from being pumped to the containment spray ring.**
- **ND-58A (Train A ND to NV & NI Pumps) prevents NV System suction overpressurization**
- **NI -185A (RB Sump to Train A ND & NS) prevents FWST from being drained to the containment sump**
- **NS-18A (A NS Pump From Cont Sump) prevent NS System suction overpressurization**

ND-4B and ND-19A are normally open when the ND System is aligned to the FWST, NC loop "C" hot leg or in standby readiness. They are closed when aligned for ECCS recirculation phases.

2.3.3 ND-14 (B ND HX Outlet), ND-29 (A ND HX Outlet)

These are air operated valves and are controlled by non-safety manual loaders on MC11 or the ASP by transferring control with the "C/R, LOCAL" selector switch. The valve manual loaders are used to control the pump discharge flow. These valves are failed to the full open position on a S_S to ensure the required ECCS flow is provided by the ND Pumps. On a loss of power to the solenoid valve in the control air line (NDSV0140 or NDSV0290)**, control will transfer from the ASP to the control room. These valves are designed to fail open on a loss of instrument air, however, since the control system utilizes non-safety grade controllers, solenoid valves and instrumentation, the valves may not assume their safe position when required. To alleviate this, a safety grade solenoid is in the control air line to vent the valve and insure it achieves its safe position. This safety solenoid is** NDSV0141 for ND-14 and NDSV0291 for ND-29. **The solenoid is deenergized by the safety injection signal (S_S), which is latched in through the operation of a latching relay. To regain control of ND-14 and ND-29 following a Safety Injection, the "Safety Injection Reset Train A (B)" must be reset followed by resetting the "Train A (B) Modulating Valves Reset" (located on the RN portion of MC11). Each of these reset pushbuttons have an amber "Reset" light which is illuminated when its respective signal is reset.**

Valve status for both valves is provided to the OAC and the Monitor Light Panel. An annunciator on AD11 actuates in the control room when either valve control is transferred to the ASP.

2.3.4 NI-173A (Train A ND to A & B CL) and NI-178B (Train B ND to C & D CL)

These valves can be operated from the ND section of MC11. These valves have throttle capability but no automatic control. When aligned for standby readiness, these valves are fully open with power removed.

2.3.5 ND-17 (B ND HX to Letdown HX), ND-32 (A ND HX to Letdown HX), ND-18 (B ND HX Bypass) and ND-33 (A ND HX Bypass)

These non-safety related MOVs are controlled from MC11. Using their open/closed pushbuttons, ND-18 and ND-33 can be throttled in the open direction only (the closing contacts "seal in" on the closed direction). ND-17 and ND-32 can be throttled in both directions using their open /close pushbuttons. These four valves have no automatic control features.

Examination Outline Cross-reference:	Level	RO	SRO
	Tier #	2	
	Group #	1	
	K/A #	006 K5.08	
	Importance Rating	2.9	

Knowledge of the operational implications of the following concepts as they apply to ECCS: Operation of pumps in parallel

Proposed Question: Common 5

Given the following on Unit 1:

- A LBLOCA occurred 50 minutes ago.
- Cold Leg Recirculation has been aligned in accordance with ES-1.3, Cold Leg Recirculation.
- FWST level is 32 inches.
- Containment pressure is 5 psig and slowly going up.
- The crew is performing action of FR-Z.1, Response to High Containment Pressure.
- All available equipment is in operation.

Which ONE (1) of the following describes action that will be taken to reduce Containment pressure?

Realign ONE train of ND discharge from…

A. the ND to Cold Legs flowpath to Aux Spray to provide a separate parallel flowpath of Containment Spray.

B. the ND to Cold Legs flowpath to the NS pump suction to provide a higher driving head for spray flow.

C. NV and NI Pump suctions to Aux Spray to provide a separate parallel flowpath of Containment Spray.

D. NV and NI Pump suctions to the NS pump suction to provide a higher driving head for spray flow.

Proposed Answer: A

Explanation (Optional):
A is correct. Cold leg flowpath is isolated and ND flow realigned to spray ring
B is incorrect. Not aligned to NS pump suction, but credible because ND is aligned for spray.
C is incorrect because the flowpath (Piggyback) is maintained throughout the event once it is aligned. Credible because one ND flowpath is isolated and the spray flowpath is correct.
D is incorrect because the wrong discharge flowpath is selected. Credible because an ND flowpath is realigned. Selection is either 1 of 2 discharge paths

Technical Reference(s): FR-Z.1, pg 7, 8 (Attach if not previously provided)
OP-MC-FRZ, pg 29;
ECC-NI, pg 39

Proposed references to be provided to applicants during examination: None

Learning Objective: FRZ, Obj 4 (As available)

Question Source: Bank # _____
Modified Bank # _____ (Note changes or attach parent)
New X

Question History: Last NRC Exam _____

Question Cognitive Level: Memory or Fundamental Knowledge X
Comprehension or Analysis _____

10 CFR Part 55 Content: 55.41 10
55.43 _____

Comments:

CLASSROOM TIME (Hours)

NLO	NLOR	LPRO	LPSO	LOR
		0.5	0.5	0.5

OBJECTIVES

SEQ	OBJECTIVE	NLO	NLOR	LPRO	LPSO	LOR
1	Explain the purpose of each procedure in the FR-Z series.			X	X	
2	Discuss the entry and exit guidance for each procedure in the FR-Z series.			X	X	
3	Discuss the mitigating strategy (major actions) of each procedure in the FR-Z series.			X	X	X
4	Discuss the basis for any note, caution or step for each procedure in the FR-Z series.			X	X	X
5	Given the Foldout page, discuss the actions included and the basis for these actions.			X	X	X
6	Given the appropriate procedure, evaluate a given scenario describing accident events and plant conditions to determine any required action and its basis.			X	X	X
7	Discuss the time critical task(s) associated with the FR-Z series procedures including the time requirements and the basis for these requirements.			X	X	X

STEP 14 Check if ND aux spray is required: (CONTINUOUS ACTION)

PURPOSE: To determine if ND Aux spray is required.

BASIS: If containment pressure is greater than 3 psig, then one loop of ND Aux spray is required as soon as a train of ND is operating in the Cold Leg Recirc mode and 50 minutes have elapsed. If containment pressure is greater than 10 psig and is not coming down with one loop of ND Aux spray, then the other loop is needed.

CAUTION **Failure to stop ND aux spray when required may result in a negative containment pressure.**

While the CPCS system ensures NS and VX are stopped prior to containment pressure going negative, no automatic protection exists for the ND Aux spray alignment. Therefore, if ND Aux spray is aligned, manual operator action is required to isolate it prior to the containment pressure going negative.

CAUTION **IF a ND pump aligned to aux spray ever stops with its spray valve open, the associated spray line will void. If this were to occur, Enclosure 6 (ND Pump Restart Requirement if Aux Spray is Open) will prevent a water hammer and potential pipe failure in the annulus.**

Step 14.i WHEN time allows, THEN place INFO Tag on ND pump control switch **PER** Enclosure 6. If an ND pump trips while aligned to containment spray, the ND spray line in the annulus is likely to void. (PIP M97-151).

Objective # 3

7.2 Emergency Core Cooling System (ECCS) Composite (03/13/01)

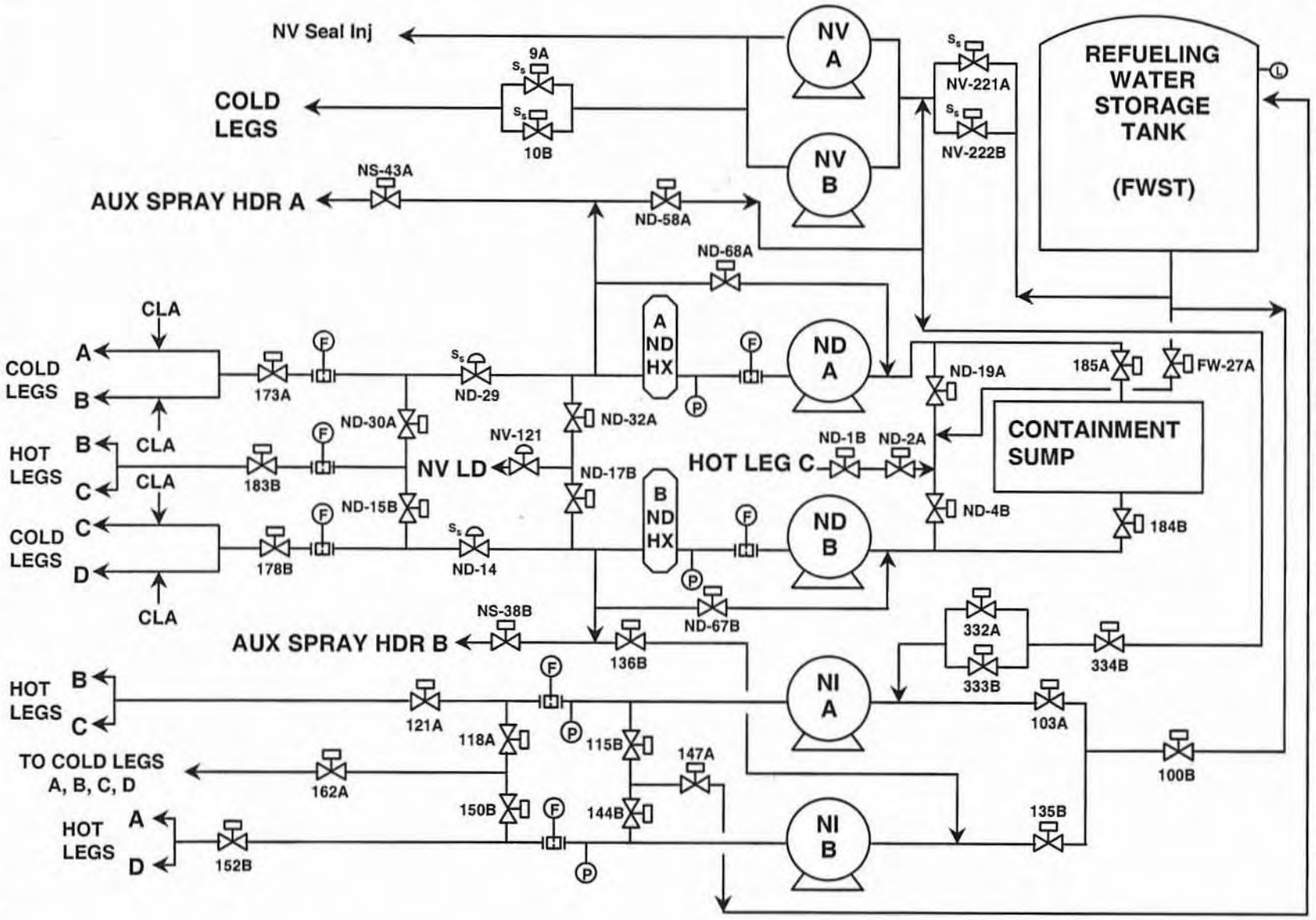

ACTION/EXPECTED RESPONSE	RESPONSE NOT OBTAINED
14. **Check if one or two trains of ND aux spray should be aligned:**	
__ a. Any ND Train - OPERATING IN COLD LEG RECIRC MODE.	a. Perform the following: **NOTE** ES-1.3 will align one train ND spray if required. FR-Z.1 will evaluate if a second train is needed. __ 1) **WHEN** EP/1/A/5000/ES-1.3 (Transfer To Cold Leg Recirc), is completed, **THEN** perform Step 14 to determine if one or two trains of ND aux spray should be aligned. __ 2) **GO TO** Step 15.
__ b. Containment pressure - GREATER THAN 3 PSIG.	__ b. **GO TO** Step 15.
c. Check the following: __ • Time after reactor trip - GREATER THAN 50 MINUTES • At least one of the following - ENERGIZED: __ • 1NI-173A (Train A ND To A & B CL) OR __ • 1NI-178B (Train B ND To C & D CL).	c. Perform the following: __ 1) **WHEN** at least one valve energized **AND** time after reactor trip greater than 50 minutes, **THEN** perform Step 14. __ 2) **GO TO** Step 15.
d. Check the following - CLOSED. __ • 1NS-43A (A ND To NS Cont Outside Isol) __ • 1NS-38B (B ND To NS Cont Outside Isol).	__ d. **IF** ND aux spray is aligned to an operating ND pump, **THEN GO TO** Step 14.g.

ACTION/EXPECTED RESPONSE	RESPONSE NOT OBTAINED
14. (Continued) e. Check if core cooling can be maintained with minimum S/I flow: __ • At least one NV pump - ON __ • At least one NI pump - ON • At least one of the following valves - OPEN: __ • 1NI-9A (NC Cold Leg Inj From NV) OR __ • 1NI-10B (NC Cold Leg Inj From NV). f. Establish ND aux spray from one train that is in Cold Leg Recirc mode: • For A train: __ 1) Close 1NI-173A (Train A ND To A & B CL). __ 2) Open 1NS-43A (A ND To NS Cont Outside Isol). OR • For B train: __ 1) Close 1NI-178B (Train B ND To C & D CL). __ 2) Open 1NS-38B (B ND To NS Cont Outside Isol).	e. Perform the following: __ 1) **IF** both ND trains are aligned **AND** operating in Cold Leg Recirc, **THEN GO TO** 14.f. __ 2) **GO TO** Step 15.

Examination Outline Cross-reference:	Level	RO	SRO
	Tier #	2	
	Group #	1	
	K/A #	006 K1.10	
	Importance Rating	2.6	

Knowledge of the physical connections and/or cause effect relationships between the ECCS and the following systems: Safety injection tank heating system

Proposed Question: Common 6

Which ONE (1) of the following describes how FWST temperature is normally controlled?

A. One heater bank automatically cycles on and off to maintain FWST temperature at approximately 75°F. Two additional banks are operated manually if necessary.

B. One heater bank automatically cycles on and off to maintain FWST temperature at approximately 75°F. Two additional banks will automatically energize if FWST temperature drops to 72°F.

C. All three heater banks are operated manually as necessary to maintain FWST temperature between 70°F and 80°F.

D. All three heater groups are operated automatically to maintain FWST temperature at approximately 75°F.

Proposed Answer: A

Explanation (Optional):

A. Correct. One bank normally operating in auto to maintain above TS limit. Heaters cycle around the setpoint of 75 deg F

B. Incorrect. The other 2 groups are operated manually only. Credible because they will be manually turned on at 72 Degrees F

C. Incorrect. One group of heaters is in auto, but the temperature range is correct.

D. Incorrect. Temperature is maintained at 75, but only by 1 group

Technical Reference(s): FH-FW, section 2.11 (Attach if not previously provided)

Proposed references to be provided to applicants during examination: None

Learning Objective: FH-FW-7 (As available)

Question Source: Bank # _____

Modified Bank # _____ (Note changes or attach parent)

New X

Question History: Last NRC Exam _____

Question Cognitive Level: Memory or Fundamental Knowledge X

Comprehension or Analysis _____

10 CFR Part 55 Content: 55.41 7

55.43 _____

Comments:

	OBJECTIVE	NLO	NLOR	LPRO	LPSO	LOR
6	Concerning the FWST: • State the Minimum FWST volume in modes 1-4. • Discuss the purpose of this minimum volume. • State the minimum FWST boron concentration. • Discuss the purpose of this minimum concentration • State the minimum and maximum FWST temperatures. • Discuss the purposes of these temperature limitations.	X	X	X	X	X
7	Concerning the FWST heater equipment panel: • Discuss the operation of each heater bank. • Discuss the cause and consequences of receiving the FWST overtemperature light and describe how it must be reset.	X	X	X	X	
8	Concerning the FW Pump: • State the purpose of the FW Pump. • Given values of FW Pump suction pressure, discharge pressure and flow rate and provided with the applicable procedure and round sheet, determine if the parameters are acceptable or not.	X	X	X	X	
9	Concerning the FW Recirculation Pumps: • State the purpose of the FW Recirculation Pumps. • Given values of the FW Recirculation Pump discharge pressure and flow rate and provided with the applicable procedure and round sheet, determine if the parameters are acceptable or not.	X	X	X	X	

There is an OAC alarm circuit for the FWST level transmitter enclosure temperature for both units. The OAC will alarm if outside air temperature is 40°F decreasing. This will allow Operations time to notify IAE SPOC to fix the enclosure heaters before the transmitter lines are in a situation where they could freeze. Freezing of the transmitter lines could render the ND autoswitchover capability inoperable. (LER 370/96-01) (PIP 2-M96-0332). Also, if any one of the four enclosures has a temperature > 130°F, an OAC alarm will actuate. This high temperature is wired in parallel with the existing low temperature enclosure alarm such that the same OAC point will alarm whenever any one of the four enclosure temperatures is high or low. (MM-8884 and MM-8885).

2.11 The Refueling Water Storage Tank Heaters

Objective 3

Objective 7

The FWST heaters are rated at 575 VAC, 3 phase, 60 cycles. The heater elements are stainless steel with high limit thermocouples. There are four banks of heater elements distributed around the periphery of the FWST. Each bank contains three elements, one 10 KW heater element associated with each of the three groups. This arrangement allows for even heating of the FWST water from each heater group.

Heater Group "A" can be controlled both automatically and manually. In automatic, the heater group is set to energize at 75°F when two out of the three temperature loops detect 75°F. The heater group will cycle on and off around this setpoint. Additionally, a high temperature heater cutoff will trip the heaters off at 80°F if two out of the three temperature loops detect 80°F. Heater Groups "B" and "C" are controlled in manual only. Heater Group "B" should be manually energized at 73°F decreasing and heater Group "C" should be manually energized at 72°F decreasing.

Objective 7

The following will cause a heater group trip:

- Heater element overtemperature (Relay must be reset using RESET pushbutton located on refueling water heater control panel).
- Excessive water temperature in tank (80°F).
- Low water level in tank (47 inches).

Objective 3

The following FWST Temperatures have receiver gauges in the Control Room:

- FWST Temperature MC-9.

The FWST heater groups have ON/OFF indicating lights and a pushbutton operator for each heater.

The FWST heater control panel has an indicating light which energizes when a heater overheats. Each heater group has a local indicating temperature gauge to indicate element temperature. A RESET pushbutton is used to reset overtemperature conditions.

Objective 3

The following Annunciator Alarms are associated with FWST Temperature:

- Refueling Water Emergency Low Temperature 1AD12, F-5
- Refueling Water Low-Low Temperature 1AD12, E-5
- Refueling Water Low Temperature 1AD12, D-5
- FWST Yard Line Contents Low Temperature 1AD13, B-1

Objective 3

The following Computer inputs are associated with FWST Temperature:

- FWST Yard Line Contents Temperature
- FWST Heater Overtemperature
- FWST Temperature High
- FWST Temperature Low
- FWST Temperature Low-Low
- FWST Temperature Emergency Low

Main header water temperature is measured just inside the Auxiliary Building. An alarm sounds when water temperature decreases below 75°F. A test connection is used to verify water temperature. Three redundant instruments are used to measure water temperature. Temperature is be maintained above

Examination Outline Cross-reference:	Level	RO	SRO
	Tier #	2	
	Group #	1	
	K/A #	007 A1.02	
	Importance Rating	2.7	

Ability to predict and/or monitor changes in parameters (to prevent exceeding design limits) associated with operating the PRTS controls including: Maintaining quench tank pressure

Proposed Question: Common 7

Given the following conditions:

- A transient has occurred causing a PZR PORV to momentarily lift.
- The following alarm is received in the control room:
  - PRT HIGH PRESS
  - PRT HIGH TEMP
- PRT pressure indicates 8.5 psig and has stabilized.
- PRT temperature is 125 degrees F and stable.

Which ONE (1) of the following describes the method used to restore PRT conditions to normal?

A. Vent the PRT to Containment

B. Vent the PRT to the "B" Waste Gas Shutdown Tank

C. Reduce pressure by cooling the PRT using the NCDT heat exchanger

D. Reduce pressure by draining the PRT and filling with Primary Grade water

Proposed Answer: C

Explanation (Optional):

A. Incorrect, but is an option in accordance with the procedure. May be performed during plant shutdown

B. Incorrect. May align during degas

C. Correct. Would cool the PRT using this method prior to any venting. Temperature is high enough for this to work

D. Incorrect. Could cool the PRT by bleed and feed, but it is not the procedure for reducing pressure if cooling is available

Technical Reference(s): AD-6, D9 (Attach if not previously provided)
OP/1/A/6150/004;
PS-NC pg 39, 41

Proposed references to be provided to applicants during examination: None

Learning Objective: _____ (As available)

Question Source: Bank # _____
Modified Bank # _____ (Note changes or attach parent)
New X

Question History: Last NRC Exam _____

Question Cognitive Level: Memory or Fundamental Knowledge _____
Comprehension or Analysis X

10 CFR Part 55 Content: 55.41 7
55.43 _____

Comments:

OBJECTIVES

	OBJECTIVE	NLO	NLOR	LPRO	LPSO	LOR
12	Concerning the Pzr cold and hot calibrated level indication:					
	• state the purpose of this indication		X	X	X	
	• describe how the operator corrects the indicated level for temperature		X	X	X	X
	• state the problems which can occur if the level is not corrected for temperature		X	X	X	X
13	State the purpose of the pressurizer power operated relief valves.	X	X	X	X	
14	List the parameters and setpoints associated with the NCS relief valves.	X	X	X	X	
15	Describe the indications which would be used to identify a leaking Pzr PORV or safety.		X	X	X	X
16	Concerning the Pzr PORV loop seals:					
	• what was their original purpose		X	X	X	
	• why are they continuously drained during operation		X	X	X	
	• describe the operational concern of leaving the drain valve open while its associated PORV is leaking		X	X	X	X
	• state from where the loop seal drain valves are operated.		X	X	X	X
17	State the purpose of the Pzr Code safety valve.	X	X	X	X	
18	Concerning the Pzr Code safety valves loop seals:					
	• what was their original purpose		X	X	X	
	• why are they continuously drained during operation		X	X	X	X
19	State the purpose of the pressurizer relief tank and the design features which accomplish the purpose.	X	X	X	X	

The discharge line from each safety also has a temperature element which provides meter indication on 1(2)MC10 and an alarm on **1(2)AD6 "PZR Safety Discharge Hi Temp " (setpoint 20^0 F above ambient on one out of three).** This indication alerts the operator of leaking/lifting safety valve(s). The discharge line also has an acoustic monitor which "listens" for sounds of a safety valve discharge. This monitor provides input to an alarm on **1(2)AD6 "NC1, 2, or 3 FLO DETECTED"** and also to a control board light **"FLOW/NO FLOW".** Each pressurizer safety valve is equipped with an accelerometer to detect leakage. The accelerometers provide a signal for each pressurizer safety valve at panel ALDM-1 (733 electrical penetration room). Operations can direct an NLO and an IAE technician to this panel when flow has been detected by the control room alarm. This local panel can give a bar graph readout "relative" to leakage indication with IAE assistance This is not a GPM read out but rather a 1 to 10 scale of 0% to 100% flow anticipated from a pressurizer safety at full temperature and pressure.

2.9 Pressurizer Relief Tank (PRT)

Objective # 19

The purpose of the pressurizer relief tank is to condense and cool discharge water from the PORVs and safeties. The tank normally contains water and a N_2 cover gas. The N_2 gas overpressure is used to prevent the O_2 from entering the tank and forming an explosive mixture with the H_2 gas present. The N_2 gas is supplied from bulk N_2 (GN system) or from Shutdown Tank B. When the relief valves lift, the steam is discharged into the PRT through a sparger pipe (under water). The PRT design is based on the requirement to:

- be able absorb the pressurizer discharge during a step load decrease of 10% (equivalent to 110% continuous discharge from the pressurizer).
- the spray rate is designed to cool the tank from 200^0 F to 120^0 F in approximately one hour following the design discharge.
- the volume of the N_2 gas in the PRT is selected to limit the maximum pressure following a design discharge to 50 psig.

The PRT is not designed for relief valve continuous discharge, therefore, it has two rupture discs designed to prevent it from exceeding its design pressure of 100psig. The rupture disc setting is also 100 psig which is twice the calculated pressure resulting from the maximum design safety valve discharge. The tank and rupture discs are also designed for full vacuum to prevent tank collapse if the contents cool following a discharge without nitrogen being added.

The PRT can be vented to containment atmosphere through a manual vent valve at the tank (NC51). This line has a capped connection designed to accept a filter assembly to reduce radioactivity released from the tank to containment. The PRT can also be aligned to the waste gas system for venting.

The PRT is equipped with internal spray and drain system to cool the tank. The PRT is cooled by recirculating its contents with the Reactor Coolant Drain Tank (NCDT/) Pump through the NCDT heat exchanger. If the NCDT pumps are unavailable, the PRT can be cooled by increasing PRT N_2 pressure, initiating PRT spray flow from the RMWST while cycling NC107 maintain level. The PRT has a temperature indication on 1(2)MC10 and an alarm on **1(2)AD6 "PRT Hi Temp" (setpoint 114^0 F)** to inform the operator that the tank needs cooling. The PRT has level and pressure indication on 1(2)MC10 and alarms on **1(2)AD6 "PRT Hi Press" (setpoint 8 psig)** and **"PRT Abnormal Level" (setpoints hi 88% and low 64%).**

Refer to OP/1(2)/A/6150/004 Pressurizer Relief Tank, for PRT operations.

Nomenclature: **PRT HI PRESS** Window: **D9**

Setpoint: Greater than 8 psig

Origin: Pressure transmitter on tank (1NCPT-5130)

Probable Cause:
- Pressurizer relief or safety valve discharging into tank
- N_2 overpressure

Automatic Action: PRT rupture disk relieves at 100 psig.

Immediate Action:
1. Monitor PRT temperature, pressure, and level on Main Control Board to determine cause of alarm.
2. Refer to OP/1/A/6150/004 (Pressurizer Relief Tank) for temperature and level concerns.
3. Contact Radwaste for venting or purging of PRT.

Supplementary Action: Identify source of overpressure and take corrective action.

References:
- MCFD-1553
- NSM MG-1-2126

End Of Response

1. Limits and Precautions

1.1 PRT temperature should be maintained less than 114°F.

1.2 Shutdown Tank "B" or Bulk Nitrogen shall maintain a N2 blanket on the PRT during normal operations.

1.3 PRT level should be maintained 64 - 88% during normal operations.

1.4 Venting of PRT must be coordinated through Radwaste Chemistry.

1.5 Minimum NCDT and PRT pressure is 0 psig. {PIP-M-99-5074}

2. Initial Conditions

_____ 2.1 N_2 System aligned per OP/0/A/6450/008 (Nitrogen System).

_____ 2.2 Primary grade water available per OP/1/A/6200/012 (Reactor Makeup Water System).

_____ 2.3 NCDT operating per OP/1/A/6500/001 (Liquid Waste System).

_____ 2.4 WG Shutdown Tank "B" available per OP/0/A/6200/018 (Waste Gas Operation).

3. Procedure

☐ 3.1 Evaluate all outstanding R&Rs that may impact performance of this procedure.

3.2 Perform the following sections, as applicable:

- ☐ Section 3.3, PRT Gas Purge to Containment
- ☐ Section 3.4, PRT Gas Purge to WG
- ☐ Section 3.5, Returning PRT Level to Normal Following Gas Purge

3.3 PRT Gas Purge to Containment

_____ 3.3.1 Notify Radwaste Chemistry for approval to vent PRT to Containment.

_____ _____/_____
Person Contacted Date Time

_____ 3.3.2 Notify RP to perform the following:

☐ Give approval to vent PRT to Containment
☐ Evaluate need to install filter assembly on 1NC-51 (PRT Vent)
☐ **IF** desired, install filter assembly on 1NC-51 (PRT Vent)

_____ _____/_____
Person Contacted Date Time

_____ 3.3.3 Ensure 1NC-51 (PRT Vent) open.

_____ 3.3.4 Open 1NC-58A (PRT Spray Supply Block).

3.3.5 Ensure one of the following running:

_____ • 1A Rx M/U Water Pump

OR

_____ • 1B Rx M/U Water Pump

☐ 3.3.6 Maintain PRT pressure less than 10 psig.

_____ 3.3.7 **WHEN** PRT level 90 - 95%, perform the following:

_____ 3.3.7.1 **IF** Rx M/U Water Pump started in Step 3.3.5, select "AUTO" on running pump:

_____ • 1A Rx M/U Water Pump

OR

_____ • 1B Rx M/U Water Pump

_____ 3.3.7.2 Close 1NC-58A (PRT Spray Supply Block).

_____ 3.3.8 **WHEN** PRT pressure less than 1 psig, perform the following:

_____ 3.3.8.1 Close 1NC-51 (PRT Vent).

_____ 3.3.8.2 **IF** filter assembly installed on 1NC-51 (PRT Vent), notify RP to remove filter assembly from 1NC-51 (PRT Vent).

_____ _____/_____
Person Contacted Date Time

_____ 3.3.8.3 Ensure pipe cap installed on 1NC-51 (PRT Vent).

_____ 3.3.9 Notify Radwaste Chemistry that PRT Gas Purge to Containment complete.

_____ _____/_____
Person Contacted Date Time

3.4 PRT Gas Purge to WG

_____ 3.4.1 Ensure 1NC-51 (PRT Vent) closed.

_____ 3.4.2 Notify Radwaste Chemistry to vent PRT per OP/0/A/6200/018 (Waste Gas Operation) or OP/1/A/6200/100 (WG Support of Unit 1 Startup).

_____ _____/_____
Person Contacted Date Time

_____ 3.4.3 Open 1NC-58A (PRT Spray Supply Block).

3.4.4 Ensure one of the following running:

_____ • 1A Rx M/U Water Pump

OR

_____ • 1B Rx M/U Water Pump

_____ 3.4.5 **WHEN** PRT level 90 - 95%, perform the following:

_____ 3.4.5.1 **IF** Rx M/U Water Pump started in Step 3.4.4, select "AUTO" on running pump:

_____ • 1A Rx M/U Water Pump

OR

_____ • 1B Rx M/U Water Pump

_____ 3.4.5.2 Close 1NC-58A (PRT Spray Supply Block).

_____ 3.4.6 **WHEN** notified by Radwaste Chemistry to return PRT level to normal, perform Section 3.5, Returning PRT Level to Normal Following Gas Purge.

3.5 Returning PRT Level to Normal Following Gas Purge

NOTE:
- Equalizing pressure between PRT and NCDT reduces possibility of NCDT Pump trips.
- **IF** unequal pressure between PRT and NCDT, level in NCDT can change quickly during system alignments.

_____ 3.5.1 Coordinate with Radwaste Chemistry to obtain desired PRT pressure.

_____ _____/_____
Person Contacted Date Time

CAUTION: NCDT pressure will rise rapidly to PRT pressure. **IF** NCDT pressure goes above VCT pressure, NC Pump #2 and #3 seals will be adversely affected.

_____ 3.5.2 **IF** 1NV-94AC (U1 NC Pumps Seal Water Return Cont Inside Isol) **AND** 1NV-95B (U1 NC Pump Seal Water Return Cont Outside Isol) open, check VCT pressure is greater than PRT pressure.

_____ 3.5.3 Open 1NC-107A (Pressurizer Relief Tank Drain).

_____ 3.5.4 **IF** NCDT level approaches 95%, close 1WL-41B (NCDT Vent Cont Outside Isol).

_____ 3.5.5 **WHEN** PRT level 75%, close 1NC-107A (PRT Drain).

_____ 3.5.6 **WHEN** NCDT level less than 95%, ensure 1WL-41B (NCDT Vent Cont Outside Isol) open.

_____ 3.5.7 Notify Radwaste Chemistry to sample PRT gas space per OP/1/A/6200/100 (WG Support of Unit 1 Startup).

_____ _____/_____
Person Contacted Date Time

_____ 3.5.8 **IF** PRT gas space sample out of spec, perform the following as directed by Radwaste Chemistry:

☐ 3.5.8.1 Section 3.4, PRT Gas Purge to WG.

☐ 3.5.8.2 Section 3.5, Returning PRT Level to Normal Following Gas Purge.

End of Enclosure

Unit 1

Examination Outline Cross-reference:	Level	RO	SRO
	Tier #	2	
	Group #	1	
	K/A #	007 K3.01	
	Importance Rating	3.3	

Knowledge of the effect that a loss or malfunction of the PRTS will have on the following: Containment

Proposed Question: Common 8

Given the following:

- A reactor trip has occurred.
- The crew is performing E-0, Reactor Trip or Safety Injection.
- ONE (1) PZR safety valve has stuck partially open.
- PRT pressure is 32 psig and going up.
- Containment pressure is 0.1 psig and stable

Which ONE (1) of the following describes the highest indicated PRT pressure that will exist just prior to Containment pressure rising due to this event?

A. 85.4 psig

B. 100.1 psig

C. 104.8 psig

D. 114.8 psig

Proposed Answer: B

Explanation (Optional):

A. Incorrect. Credible because it is 100 psig minus 14.7, taking into account 0.1 psig Ctmt

B. Correct. 100 psig rupture disc blows. (100 + 0.1)

C. Incorrect. Credible because would indicate failure at 90 psig in PRT

D. Incorrect. Credible because can arrive at number with a math error.

Technical Reference(s): OP/1/6150/004 (Attach if not previously provided)

LP PS-NC

Proposed references to be provided to applicants during examination: None

Learning Objective: PS-NC 19 (As available)

Question Source: Bank # X
Modified Bank # _____ (Note changes or attach parent)
New _____

Question History: Last NRC Exam North Anna Retake 2006

Question Cognitive Level: Memory or Fundamental Knowledge _____
Comprehension or Analysis X

10 CFR Part 55 Content: 55.41 7
55.43 _____

Comments:

OBJECTIVES

	OBJECTIVE	NLO	NLOR	LPRO	LPSO	LOR
12	Concerning the Pzr cold and hot calibrated level indication:					
	• state the purpose of this indication		X	X	X	
	• describe how the operator corrects the indicated level for temperature		X	X	X	X
	• state the problems which can occur if the level is not corrected for temperature		X	X	X	X
13	State the purpose of the pressurizer power operated relief valves.	X	X	X	X	
14	List the parameters and setpoints associated with the NCS relief valves.	X	X	X	X	
15	Describe the indications which would be used to identify a leaking Pzr PORV or safety.		X	X	X	X
16	Concerning the Pzr PORV loop seals:					
	• what was their original purpose		X	X	X	
	• why are they continuously drained during operation		X	X	X	
	• describe the operational concern of leaving the drain valve open while its associated PORV is leaking		X	X	X	X
	• state from where the loop seal drain valves are operated.		X	X	X	X
17	State the purpose of the Pzr Code safety valve.	X	X	X	X	
18	Concerning the Pzr Code safety valves loop seals:					
	• what was their original purpose		X	X	X	
	• why are they continuously drained during operation		X	X	X	X
19	State the purpose of the pressurizer relief tank and the design features which accomplish the purpose.	X	X	X	X	

The discharge line from each safety also has a temperature element which provides meter indication on 1(2)MC10 and an alarm on **1(2)AD6 "PZR Safety Discharge Hi Temp " (setpoint 20^0 F above ambient on one out of three).** This indication alerts the operator of leaking/lifting safety valve(s). The discharge line also has an acoustic monitor which "listens" for sounds of a safety valve discharge. This monitor provides input to an alarm on **1(2)AD6 "NC1, 2, or 3 FLO DETECTED"** and also to a control board light **"FLOW/NO FLOW".** Each pressurizer safety valve is equipped with an accelerometer to detect leakage. The accelerometers provide a signal for each pressurizer safety valve at panel ALDM-1 (733 electrical penetration room). Operations can direct an NLO and an IAE technician to this panel when flow has been detected by the control room alarm. This local panel can give a bar graph readout "relative" to leakage indication with IAE assistance This is not a GPM read out but rather a 1 to 10 scale of 0% to 100% flow anticipated from a pressurizer safety at full temperature and pressure.

2.9 Pressurizer Relief Tank (PRT)

Objective # 19

The purpose of the pressurizer relief tank is to condense and cool discharge water from the PORVs and safeties. The tank normally contains water and a N_2 cover gas. The N_2 gas overpressure is used to prevent the O_2 from entering the tank and forming an explosive mixture with the H_2 gas present. The N_2 gas is supplied from bulk N_2 (GN system) or from Shutdown Tank B. When the relief valves lift, the steam is discharged into the PRT through a sparger pipe (under water). The PRT design is based on the requirement to:

- be able absorb the pressurizer discharge during a step load decrease of 10% (equivalent to 110% continuous discharge from the pressurizer).
- the spray rate is designed to cool the tank from 200^0 F to 120^0 F in approximately one hour following the design discharge.
- the volume of the N_2 gas in the PRT is selected to limit the maximum pressure following a design discharge to 50 psig.

The PRT is not designed for relief valve continuous discharge, therefore, it has two rupture discs designed to prevent it from exceeding its design pressure of 100psig. The rupture disc setting is also 100 psig which is twice the calculated pressure resulting from the maximum design safety valve discharge. The tank and rupture discs are also designed for full vacuum to prevent tank collapse if the contents cool following a discharge without nitrogen being added.

The PRT can be vented to containment atmosphere through a manual vent valve at the tank (NC51). This line has a capped connection designed to accept a filter assembly to reduce radioactivity released from the tank to containment. The PRT can also be aligned to the waste gas system for venting.

1. Limits and Precautions

1.1 PRT temperature should be maintained less than 114°F.

1.2 Shutdown Tank "B" or Bulk Nitrogen shall maintain a N2 blanket on the PRT during normal operations.

1.3 PRT level should be maintained 64 - 88% during normal operations.

1.4 Venting of PRT must be coordinated through Radwaste Chemistry.

1.5 Minimum NCDT and PRT pressure is 0 psig. {PIP-M-99-5074}

2. Initial Conditions

_____ 2.1 N_2 System aligned per OP/0/A/6450/008 (Nitrogen System).

_____ 2.2 Primary grade water available per OP/1/A/6200/012 (Reactor Makeup Water System).

_____ 2.3 NCDT operating per OP/1/A/6500/001 (Liquid Waste System).

_____ 2.4 WG Shutdown Tank "B" available per OP/0/A/6200/018 (Waste Gas Operation).

3. Procedure

☐ 3.1 Evaluate all outstanding R&Rs that may impact performance of this procedure.

3.2 Perform the following sections, as applicable:

- ☐ Section 3.3, PRT Gas Purge to Containment
- ☐ Section 3.4, PRT Gas Purge to WG
- ☐ Section 3.5, Returning PRT Level to Normal Following Gas Purge

3.3 PRT Gas Purge to Containment

_____ 3.3.1 Notify Radwaste Chemistry for approval to vent PRT to Containment.

_____ _____/_____
Person Contacted Date Time

_____ 3.3.2 Notify RP to perform the following:

☐ Give approval to vent PRT to Containment
☐ Evaluate need to install filter assembly on 1NC-51 (PRT Vent)
☐ **IF** desired, install filter assembly on 1NC-51 (PRT Vent)

_____ _____/_____
Person Contacted Date Time

_____ 3.3.3 Ensure 1NC-51 (PRT Vent) open.

_____ 3.3.4 Open 1NC-58A (PRT Spray Supply Block).

3.3.5 Ensure one of the following running:

_____ • 1A Rx M/U Water Pump

OR

_____ • 1B Rx M/U Water Pump

☐ 3.3.6 Maintain PRT pressure less than 10 psig.

_____ 3.3.7 **WHEN** PRT level 90 - 95%, perform the following:

_____ 3.3.7.1 **IF** Rx M/U Water Pump started in Step 3.3.5, select "AUTO" on running pump:

_____ • 1A Rx M/U Water Pump

OR

_____ • 1B Rx M/U Water Pump

_____ 3.3.7.2 Close 1NC-58A (PRT Spray Supply Block).

_____ 3.3.8 **WHEN** PRT pressure less than 1 psig, perform the following:

_____ 3.3.8.1 Close 1NC-51 (PRT Vent).

_____ 3.3.8.2 **IF** filter assembly installed on 1NC-51 (PRT Vent), notify RP to remove filter assembly from 1NC-51 (PRT Vent).

_____ _____/_____
Person Contacted Date Time

_____ 3.3.8.3 Ensure pipe cap installed on 1NC-51 (PRT Vent).

_____ 3.3.9 Notify Radwaste Chemistry that PRT Gas Purge to Containment complete.

_____ _____/_____
Person Contacted Date Time

3.4 PRT Gas Purge to WG

_____ 3.4.1 Ensure 1NC-51 (PRT Vent) closed.

_____ 3.4.2 Notify Radwaste Chemistry to vent PRT per OP/0/A/6200/018 (Waste Gas Operation) or OP/1/A/6200/100 (WG Support of Unit 1 Startup).

_____ _____/_____
Person Contacted Date Time

_____ 3.4.3 Open 1NC-58A (PRT Spray Supply Block).

3.4.4 Ensure one of the following running:

_____ • 1A Rx M/U Water Pump

OR

_____ • 1B Rx M/U Water Pump

_____ 3.4.5 **WHEN** PRT level 90 - 95%, perform the following:

_____ 3.4.5.1 **IF** Rx M/U Water Pump started in Step 3.4.4, select "AUTO" on running pump:

_____ • 1A Rx M/U Water Pump

OR

_____ • 1B Rx M/U Water Pump

_____ 3.4.5.2 Close 1NC-58A (PRT Spray Supply Block).

_____ 3.4.6 **WHEN** notified by Radwaste Chemistry to return PRT level to normal, perform Section 3.5, Returning PRT Level to Normal Following Gas Purge.

3.5 Returning PRT Level to Normal Following Gas Purge

NOTE:
- Equalizing pressure between PRT and NCDT reduces possibility of NCDT Pump trips.
- **IF** unequal pressure between PRT and NCDT, level in NCDT can change quickly during system alignments.

_____ 3.5.1 Coordinate with Radwaste Chemistry to obtain desired PRT pressure.

_____ _____/_____
Person Contacted Date Time

CAUTION: NCDT pressure will rise rapidly to PRT pressure. **IF** NCDT pressure goes above VCT pressure, NC Pump #2 and #3 seals will be adversely affected.

_____ 3.5.2 **IF** 1NV-94AC (U1 NC Pumps Seal Water Return Cont Inside Isol) **AND** 1NV-95B (U1 NC Pump Seal Water Return Cont Outside Isol) open, check VCT pressure is greater than PRT pressure.

_____ 3.5.3 Open 1NC-107A (Pressurizer Relief Tank Drain).

_____ 3.5.4 **IF** NCDT level approaches 95%, close 1WL-41B (NCDT Vent Cont Outside Isol).

_____ 3.5.5 **WHEN** PRT level 75%, close 1NC-107A (PRT Drain).

_____ 3.5.6 **WHEN** NCDT level less than 95%, ensure 1WL-41B (NCDT Vent Cont Outside Isol) open.

_____ 3.5.7 Notify Radwaste Chemistry to sample PRT gas space per OP/1/A/6200/100 (WG Support of Unit 1 Startup).

_____ _____/_____
Person Contacted Date Time

_____ 3.5.8 **IF** PRT gas space sample out of spec, perform the following as directed by Radwaste Chemistry:

☐ 3.5.8.1 Section 3.4, PRT Gas Purge to WG.

☐ 3.5.8.2 Section 3.5, Returning PRT Level to Normal Following Gas Purge.

End of Enclosure

Examination Outline Cross-reference:	Level	RO	SRO
	Tier #	2	
	Group #	1	
	K/A #	008 K1.01	
	Importance Rating	3.1	

Knowledge of the physical connections and/or cause-effect relationships between the CCWS and the following systems: SWS

Proposed Question: Common 9

Which ONE (1) of the following describes the NORMAL and BACKUP makeup supplies to the KC Surge Tank?

	NORMAL	BACKUP
A.	NB	RN
B.	YM	NB
C.	YM	RN
D.	RN	YM

Proposed Answer: C

Explanation (Optional):
A is incorrect. NB (Reactor Makeup Water) is not a supply
B is incorrect because NB is not a supply
C is correct.
D is incorrect because the sources are reversed

Technical Reference(s): PSS-KC (Attach if not previously provided)

Proposed references to be provided to applicants during examination: None

Learning Objective: PSS-KC-11 (As available)

Question Source:	Bank #	_____	
	Modified Bank #	_____	(Note changes or attach parent)
	New	X	
Question History:	Last NRC Exam	_____	
Question Cognitive Level:	Memory or Fundamental Knowledge	X	
	Comprehension or Analysis	_____	
10 CFR Part 55 Content:	55.41	4	
	55.43	_____	

Comments:

OBJECTIVES

10	Concerning the Component Cooling Water System:					
	• Describe the local controls and list the indications, including operation of the local control for KC-122.	X	X	X	X	
	• Describe the control room controls and list the indications.			X	X	X
11	State the normal and backup sources of makeup water to the system.	X	X	X	X	
12	Describe the discharge paths of the Component Cooling Water Drain Tank Pump.	X	X	X	X	
13	Given a limit and/or precaution associated with an Operating Procedure, discuss it's basis and applicability.	X	X	X	X	X
14	Concerning AP/1/A/5500/21, Loss of Component Cooling Water:			X	X	X
	• State the purpose of the AP.					
	• Recognize the symptoms that would require implementation of the AP.					
15	Concerning the Technical Specifications related to the Component Cooling Water System:					
	• Given the LCO title, state the LCO (including any COLR values) and applicability.			X	X	X
	• For any LCO's that have action required within one hour, state the action.			X	X	X
	• Given a set of parameter values or system conditions, determine if any Tech Spec LCO's is (are) not met and any action(s) required within one hour.			X	X	X
	• Given a set of plant parameters or system conditions and the appropriate Tech Specs, determine required actions.				X	X
	• Discuss the bases for a given Tech Spec LCO or Safety Limit.				X	*

* - SRO ONLY

Objective #11

Make up supply to surge tank is normally from the YM System, with a backup supply from the RN System.

The KC Surge Tank serves the following purposes.

- Accommodates for thermal expansion and contraction.
- Provides time for the operator to respond in the event of in-leakage or out-leakage.
- Provides NPSH for KC Pumps
- Provides the ability to recirculate through the surge tank to ensure uniform chemistry concentrations.

2.4. Component Cooling Drain Tank and Pump

2.4.1. KC Drain Tank

To minimize makeup and waste handling of treated water, system drains are piped to the KC drain tank. One drain tank is shared by both units. The tank is constructed primarily of stainless steel due to potential exposure to the atmosphere. The tank is then pumped back to the KC surge tank. Local level indication is available near the tank (0-100%).

2.4.2. KC Drain Tank Pump

The pump/motor is powered from SMXA Cmpt. R1I (600 VAC).

Objective #12

The pump discharge can be aligned to either units KC surge tank. Pump controls are located in the Control Room. In automatic, the pump automatically starts on high drain tank level and automatically stops on tank low level. In manual the pump is started and stopped at the operators discretion.

2.4.3. KC Standby Drain Tank Pump

A standby drain pump was installed as a backup to the permanently installed pump. The pump/motor power supply is 120 VAC from a local wall outlet. The pump is connected to the system by red rubber hoses (not normally installed). The pump is started (plugged in) when the drain tank high level alarm is received and stopped (unplugged) when the drain tank reaches its low level alarm. It is scheduled to be run annually per the Routine Operations Task List. This may be waived if it has been run in the previous year.

Examination Outline Cross-reference:

Level	RO	SRO
Tier #	2	
Group #	1	
K/A #	010 K2.01	
Importance Rating	3.0	

Knowledge of bus power supplies to the following: PZR heaters

Proposed Question: Common 10

Which ONE (1) of the following states the power supplies to PZR Heater Group "D"?

	6 Banks	1 Bank
A.	LXF	LXC
B.	ELXA	ELXB
C.	LXG	SMXG
D.	LXC	LXG

Proposed Answer: C

Explanation (Optional):

A. Incorrect. Supplies to Heater Group C
B. Incorrect. Supplies to Heater Group A and B
C. Correct. Supplies to Heater Group D
D. Incorrect. Supply to Group D, and alt to Group C

Technical Reference(s): PS-IPE (Attach if not previously provided)

Proposed references to be provided to applicants during examination: None

Learning Objective: PS-IPE Obj 4 (As available)

Question Source: Bank # _____

Modified Bank # _____ (Note changes or attach parent)

	New	X
Question History:	Last NRC Exam	
Question Cognitive Level:	Memory or Fundamental Knowledge	X
	Comprehension or Analysis	
10 CFR Part 55 Content:	55.41	7
	55.43	

Comments:

CLASSROOM TIME (Hours)

NLO	NLOR	LPRO	LPSO	LOR
	1.5	2.5	2.5	1.5

OBJECTIVES

	OBJECTIVE	NLO	NLOR	LPRO	LPSO	LOR
1.	State the purpose of the Pressurizer Pressure Control System.		X	X	X	
2.	Draw the Pressurizer Pressure Control System per training drawing 7.1.		X	X	X	
3.	Describe the controls and indications associated with the Pressurizer Pressure Control System.		X	X	X	X
4.	Describe the components controlled by the Pressurizer Pressure Master Controller.		X	X	X	X
5.	List the nominal value (assume the Master Controller is set for 2235 psig) at which actuation of the components controlled by the Pressurizer Pressure Master Controller will occur.		X	X	X	X
6.	List any alarms and the nominal value (assume the Master Controller is set for 2235 psig) at which they will occur that are generated by the Master Controller.		X	X	X	X
7.	Describe the effect that the integral function has on the output of the Pressurizer Pressure Master Controller.		X	X	X	X
8.	Describe the effect on the Pressurizer Pressure Control System when the setting on the potentiometer on the Pressurizer Pressure Master Controller is changed with the Controller in automatic.		X	X	X	X
9.	Describe the effect on the Pressurizer Pressure Control system when the Pressurizer Pressure Master output is increased or decreased with the controller is in manual.		X	X	X	X

2.4 "C" Heater Group

"C" Heater Group is made up of 7 heater banks. The heater banks have variable power control. The capacity of the "C" Heaters totals 484 KW. There are two power sources available for the "C" Heaters, LXF (normal) and LXC (Alt.). The breakers are Kirk Key interlocked so that only one can supply at a time. The supply breaker auto trips on Low Pzr Level (17%) to prevent heater damage if uncovered (due to the poor heat conduction into non-liquid surroundings). When level gets back above 17%, the supply breaker must be manually reclosed, using the MCB OPEN/CLOSED control switch for the supply breaker on 1MC10. With the supply breaker closed, the heaters might still not be energized, unless the SCR power controller is turned on by the pressure control system.

Objective #5

"C" Heater Group control is always in Automatic. The SCR power controller is controlled by the Pressure Master Controller. "C" Heater power is ramped linearly from 0% to 100% as the Pressure Master Controller output goes from 45.3% to 54.8%, regardless of system pressure. In the rare instance of starting from 50% output (2235 psig) steady state conditions (with no integral function built in), and having a rapid step decrease in pressure with no time for integral to build in, then when the controller got to 45.3%, this would be equivalent to a system pressure of 2220 psig. The same would be true for a transient in the other direction for 54.8% and 2250 psig. There is only either 484 KW or 0 KW going to the "C" Heaters, with power being controlled by the percentage of time 484 KW is going to the heaters. With "C" Heaters 10% on, 10% of the time 484 KW is going to the heaters, and 90% of the time 0 KW is going to the heaters. There is a red indicating light on the MCB that lights during the time 484 KW is being sent to the heater.

2.5 Backup Heaters

Refer to Drawing 7.6, Backup Heater Control. There are three Groups of backup heaters (A, B, & D). Groups A & B have 6 Banks each. Total worth for each Group is 416 KW. Group D has 7 Banks. Total worth is 484 KW. Groups A & B have safety related power supplies (ELXA & ELXB) and are required by Tech Specs. Group D has non-safety power supply (6 Banks from LXG, 1 Bank from SMXG at the SSF). All three Groups' supply breakers trip if Pzr level < 17%. When level recovers to above 17%, the supply breakers can be manually reclosed. Unlike the 'C' Group with its' supply breaker control on MCB 1MC10, the backup heaters have a different arrangement. The backup heater supply breaker controls are on the back vertical MCB 1MC5. On the front MCB 1MC10, they have ON/OFF control that controls the "M" contacts in the supply breaker to actually energize/de-energize the heater Groups. Groups A & B trip on a Blackout or S_s. On a Blackout, they can be manually reclosed. On a S_s, the sequencer must be reset before they can be manually reclosed. The combined total capacity of all heaters is 1800 KW.

Examination Outline Cross-reference:	Level	RO	SRO
	Tier #	2	
	Group #	1	
	K/A #	012 A4.04	
	Importance Rating	3.3	

Ability to manually operate and/or monitor in the control room: Bistable, trips, reset and test switches

Proposed Question: Common 11

A reactor startup is in progress on Unit 1.

- Intermediate Range Power indicates 5 E^{-11} amps on both channels.
- Source Range High Flux trips have NOT been blocked.

For the switch positions listed below, which ONE (1) of the following describes the unit response to a blown instrument power fuse on Source Range channel N31?

	SR Level Trip Bypass: NORMAL	SR Level Trip Bypass: BYPASS
A.	Reactor Trip	Reactor Trip
B.	Reactor Trip	NO Reactor Trip
C.	NO Reactor Trip	Reactor Trip
D.	NO Reactor Trip	NO Reactor Trip

Proposed Answer: B

Explanation (Optional):

A is incorrect but credible because switch position would not matter if a control power fuse was blown

B is correct.

C Is incorrect but credible because the effect is reversed from actual

D is incorrect because a reactor trip would occur if the switch was in NORMAL. Credible because if the SR trip was blocked, this would be correct

Technical Reference(s): IC-ENB, pg 20, 22 (Attach if not previously provided)

Proposed references to be provided to applicants during examination: None

Learning Objective: IC-ENB-10 (As available)

Question Source: Bank # X(WTSI)
Modified Bank # _____ (Note changes or attach parent)
New _____

Question History: Last NRC Exam 2005 Callaway

Question Cognitive Level: Memory or Fundamental Knowledge _____
Comprehension or Analysis X

10 CFR Part 55 Content: 55.41 7
55.43 _____

Comments:

CLASSROOM TIME (Hours)

NLO	NLOR	LPRO	LPSO	LOR
	2.0	3.0	3.0	2.0

OBJECTIVES

	OBJECTIVE	NLO	NLOR	LPRO	LPSO	LOR
1	State the purpose of the Nuclear Instrumentation System.		X	X	X	
2	Explain why it is necessary to use three ranges of Excore Nuclear Instrumentation.		X	X	X	
3	Explain the operation of the detector used in each range of instrumentation.		X	X	X	
4	Sketch the outputs of each range of Nuclear Instrumentation, to include all indication, control and protective circuits.		X	X	X	
5	Explain why gamma compensation is necessary in the Source Range and Intermediate Range but not in the Power Range.		X	X	X	
6	Describe the methods of gamma compensation used by the Source and Intermediate Ranges.		X	X	X	
7	Describe the effects of 'over' and 'under' compensation on the Intermediate Range.		X	X	X	
8	Explain the functions of the control switches for each range of Nuclear Instrumentation.		X	X	X	X
9	Concerning the channel current comparator and detector current comparator:					
	• Explain the function of each.		X	X	X	
	• List the alarm setpoints for each.		X	X	X	X
10	Explain the functions of all related bypass and block switches on the Nuclear Instrumentation miscellaneous panels.		X	X	X	X
11	List the Reactor Trips associated with the Nuclear Instrumentation System. (Include setpoints, logic and interlocks)		X	X	X	X

The Pulse Shaper shapes pulses into uniform square waves.

The Pulse Driver matches impedance between the Pulse Shaper and the Log Pulse Integrator.

The Log Pulse Integrator changes the pulse signal to a voltage output proportional to logarithm of pulse rate.

The Level Amplifier amplifies the signal from the Log Pulse Integrator to drive bistables, indicators and other circuits.

A Bistable Relay Driver provides the "**High Flux at Shutdown**" Alarm and the "**Containment Evacuation**" Alarm whenever the source range counts exceed the setpoint. Another Bistable Relay Driver provides the "**High Level Trip**" signal (10^5 cps).

An isolation amplifier feeds the OAC, SUR Circuitry, Control Board Meter, and the NR-45 Chart Recorder.

2.1.3 Source Range Outputs

Both Source Range channels read out on the Control Board with a range of 10^0 to 10^6 counts per second (cps). The Source Range level can be monitored on the NR-45 Control Room Chart Recorder. In addition to counts per second, Source Range Start-up Rate (SUR) is indicated for each channel in decades per minute (-0.5 to 5.0 DPM).

The High Flux at Shutdown alarm actuates when source range level reaches the setpoint of one half decade above normal shutdown counts. High Flux at Shutdown also actuates the Containment evacuation alarm inside the containment. A 5 second time delay precludes short duration spikes from actuating the Hi Flux at Shutdown and Containment Evacuation alarms.

2.1.4 Source Range Drawer Panel (Reference **Figure 7.5**).

Objective # 8

Detector Volts Meter - Indicates high voltage supplied to proportional counter detector.

Neutron Level Meter - Scale 10^0 to 10^6 cps.

Instrument Power "ON" Lamp - 118 volts AC Instrument power applied to drawer.

Control Power "ON" Lamp - 118 volts AC Control Power applied to drawer.

Channel "On Test" Lamp - Indicates the operation selector switch is in a position other than "NORMAL".

Loss of Detector Volt Lamp - Indicates high voltage to detector off or low.

Level Trip Lamp - indicates neutron level greater than trip setpoint in Source Range.(10^5 cps)

Level Trip Bypass Lamp - On when Level Trip switch in "Bypass" for test or calibration.

High Flux at Shutdown Lamp - Neutron level greater than 1/2 decade above normal shutdown level in Mode 6 and $\leq$ 5 times shutdown level in Modes 3,4&5.

Bistable Trip Spare Lamp - No function.

Instrument Power Fuses - Overcurrent protection for power supply circuits. Instrument power supplies the meters, circuit processing components, high voltage supply and detector power. This is true for the IR and PR drawers/circuits also.

Control Power Fuses - Overcurrent protection for control signal circuit transformers. Control power supplies the lights on the drawer and 118 VAC to the bistable relay drivers to the plant relays. (High flux at shutdown alarm and SR high level trip). This is true for the IR and PR drawers/circuits also.

NOTE (Reference **Figure 7.21**): If either instrument or control power fuses are removed, the bistables will trip. Level Trip Bypass will prevent bistable trip for Instrument Power fuses only.

Objective # 10

Level Trip Switch - Two position switch: Normal - Switch Inactive; Bypass - Enables Operation Selector Switch for test and calibration; Provides AC signal to prevent Rx trip signal during testing.

Operation Selector Switch - Eight position switch enabled by Level Trip Switch to 'Bypass' position. Channel On Test lamp lights when not in Normal. Normal - Switch Inactive; Six Test Positions with Preset cps test values; Level Adjust - Level Adjust Potentiometer in circuit.

Level Adjust Potentiometer - Adjustable test signal into level amp. - Enables adjustment of the trip level of various bistables.

Objective # 10

High Flux at Shutdown Switch - Two position switch. Normal -allows circuit to provide "High Flux at Shutdown" and "Containment Evacuation" alarm when setpoint is exceeded; Block-used during startup - Blocks High Flux at Shutdown Alarm and Containment Evacuation Alarm.

2.2 Intermediate Range

2.2.1 Intermediate Range Detectors

Objective # 6

Reference **Figure 7.6**. Both intermediate range channels use compensated ion chambers to determine reactor power. These detectors are located just above the source range detectors in the same housing. The compensated ion chamber (CIC) uses two concentric Nitrogen gas filled, volumes: the "outer" is sensitive to both neutrons and gamma (boron lined); the "inner" sensitive only to gamma. As the two volumes are mounted concentrically in one unit, both are in essentially the same radiation field. By placing a negative potential on the inner lead, the gamma signal generated in the inner volume is made to compensate or cancel out the gamma signal generated in the outer volume. Since the two volumes can not be manufactured exactly the same size, the high voltage to the center electrode is variable to adjust the sensitivity of the inner volume. Operating in the recombination region, a change in inner volume detector voltage will vary the gamma current for a given flux level. The outer volume operates in the ion chamber region where all the ion pairs are collected.

Objective # 5

Gamma radiation becomes a smaller percentage of the detector interactions as power increases and becomes insignificant after 10^{-9} amps (first two decades). Above this power level gamma compensation is no longer required for accurate indication.

Examination Outline Cross-reference:	Level	RO	SRO
	Tier #	2	
	Group #	1	
	K/A #	013 G2.1.33	
	Importance Rating	3.4	

Conduct of Operations: Ability to recognize indications for system operating parameters which are entry-level conditions for technical specifications

Proposed Question: Common 12

Given the following on Unit 1:

- 100% power.
- At 0900, 1B NV Pump OOS for seal maintenance.
- At 0930, Train B SSPS is declared INOPERABLE for IAE periodic testing.
- At 1000, Train A NS is declared INOPERABLE due to an oil leak on the "A" NS Pump.
- At 1030, Train B SSPS is returned to OPERABLE status.
- At 1100, Train A NS is returned to OPERABLE status.

Which ONE (1) of the following describes the Technical Specification implications of these activities?

A. At 0900, Train B NS operability is affected. At 1000, TS 3.0.3 should be entered, and may be exited at 1100.

B. At 0930, Train B NS operability is affected. At 1000, TS 3.0.3 should be entered and may be exited at 1030.

C. At 0900, Train B NS operability is affected. At 0930, TS 3.0.3 should be entered, and may be exited at 1100.

D. At 0930, Train B NS operability is affected. At 1000, TS 3.0.3 should be entered, and may be exited at 1100.

Proposed Answer: B

Explanation (Optional):

A is incorrect because a component is not INOP because another piece of equipment in the same train is inop. Credible because correct time for 3.0.3 entry

B is correct. Plant event 1986

C is incorrect. See A. Also credible if applicant misunderstands which equipment causes entry to 3.0.3

D is incorrect. May exit 3.0.3 at 1030, when SSPS operability is restored. Credible because 3.0.3 entry time is correct

Technical Reference(s): TS 3.0.3, ECC-ISE pg 37, 43 (Attach if not previously provided)
IR M87-004-01

Proposed references to be provided to applicants during examination: None

Learning Objective: ECC-ISE obj 14, 16 (As available)

Question Source: Bank # _____
Modified Bank # _____ (Note changes or attach parent)
New X

Question History: Last NRC Exam _____

Question Cognitive Level: Memory or Fundamental Knowledge _____
Comprehension or Analysis X

10 CFR Part 55 Content: 55.41 10
55.43 2

Comments:

	OBJECTIVE	NLO	NLOR	LPRO	LPSO	LOR
13	List the setpoints, permissives, and logic required to initiate the following: • Containment Spray (NS) Actuation • Phase "B" Isolation • Main Steam Isolation (MSI) • Main Feedwater Isolation (FWI)	X	X	X	X	X
14	Explain the relationship between SSPS Testing and the operability of the Systems and functions actuated from the Engineered Safety Features Actuation System.			X	X	X
15	Discuss the purpose of the ESF Monitor Lite Panel (BOP Panel).			X	X	
16	Concerning the Technical Specifications related to the Engineered Safeguards Actuation System:					
	• Given the LCO title, state the LCO (including any COLR values) and applicability.			X	X	X
	• For any LCO's that have action required within one hour, state the action.			X	X	X
	• Given a set of parameter values or system conditions, determine if any Tech Spec LCO's is (are) not met and any action(s) required within one hour.			X	X	X
	• Given a set of plant parameters or system conditions and the appropriate Tech Specs, determine required actions.				X	X
	• Discuss the bases for a given Tech Spec LCO or Safety Limit.				X	*
	* - SRO Only					

Feedwater Isolation (FWI) Memory Blocking Capability

Memory blocking capability to the Lo T-avg - Reactor Trip Feedwater Isolation signal.

- Normal Shutdown - Prior to opening the trip breakers, depress and hold both trains' "reset" buttons while tripping the reactor. This will instate the memory and block feedwater isolation. Cooldown below 553°F may be accomplished without further action.
- Reactor Trip Where No Feedwater Isolation (FWI) Occurs - After temperature has stabilized (> 553°F) and cooldown is desired, depress both trains' reset buttons to instate the memory and block feedwater isolation (FWI). Cooldown below 553°F may then be accomplished without further action. If no cooldown is desired, no action is required (feedwater isolation (FWI) signal remains armed for 553°F).

Closing the reactor trip breakers prior to increasing temperature above 564°F clears the memory and a feedwater isolation (FWI) will occur if the breakers are reopened before the Lo T-avg bistables are reset (at 564°F increasing) - unless the reset buttons are held while opening the breakers.

Since it is necessary to have the trip breakers open to "block" the feedwater isolation (FWI), the protection of the Lo T-avg - Reactor Trip feedwater isolation can not be mistakenly blocked during operation.

Testing

Objective # 14

Provisions for testing of the Safeguards Actuation System are incorporated into the SSPS. **One train (A or B) may be tested at a time. When in test that train is rendered inoperable. The equipment actuated by the train in test is also considered inoperable. Prior to placing an SSPS train in test the opposite train equipment actuated from ESF actuation system must be verified operable.** See Incident Report IIR M87-004-1

ESF Monitor Light Panel (BOP Panel)

Objective # 15

The purpose of the ESF Monitor Light Panel is to provide a quick method for operators to check proper pump and valve alignment during an ESF actuation.

The ESF Monitor Light Panel has components separated into various groups. Depending on the stage of ESF actuation, (i.e., injection phase, cold leg recirc phase, hot leg recirc phase) the individual groups will either be lit or dark. Any individual components, which are not in the proper alignment for a given condition, will be opposite the rest of its group, making the misaligned component easily identifiable.

5.3 Incident Investigation Report M87-004-01

In December 1986, at 0839, Operations personnel declared Train B SSPS inoperable for IAE to perform a periodic test. At 0931, OPS personnel declared Train A Containment Spray System inoperable so a periodic test could be performed on the Train A NS Heat Exchanger. OPS personnel erroneously thought that the operability of Train B NS was not affected by SSPS Train B being in the test mode. The SSPS Train B test was completed and declared operable at 1010. Both trains were inoperable from 0931 to 1010. With both trains of NS inoperable, Tech Spec 3.0.3 was in effect which requires one train to be operable or plant shutdown to be commenced within one hour. This cause of this incident was determined to be Personnel Error due to the SRO misunderstanding the impact of the SSPS being in the test mode on the NS System. Contributing causes were, inadequate controls to assure work is being done according to the operating schedule and inadequate notification to appropriate OPS personnel of tests being performed which affect train operability.

5.4 PIP M-03-03986, P-14 signal generated when 2C S/G level increased above 83%.

The Inappropriate Action was allowing steam generator (S/G) level to reach 82% thus giving a P-14 actuation signal. The apparent cause is inattention to detail.

A Reactor Operator (RO) was assigned to watch S/G levels and control and document cool down rates. After placing ND in service, the RO had notified the Control Room SRO that S/G levels were going up and the CF bypass control valves were fully closed. The electric isolations were closed to stop the level increase. The Control Room SRO was notified at 70% S/G level and he notified the OSM. It was determined that the Condensate Booster Pumps (CBP) should be shut down to stop the level increase. The Control Room SRO contacted OWPG Secondary Support, who stated that the procedures were in the Control Room and the Control Room should shut down condensate. The OSM then contacted OWPG Secondary Support for plant support and received the same information. No procedure could be found in the Control Room. A new procedure was obtained. The first several steps in the procedure required work to be performed in the plant. At that time, no one was available. A second OWPG Secondary Support person came to the control room with the same procedure that had already been started by another OWPG Secondary Support person and provided the plant support. Feed pump seal injection had to be aligned and the isolation valve for make up to the UST closed before securing the CBP's. While awaiting the completion of the plant work, the Control room closed the feed water isolation valves per the same procedure. Both feed water pumps had been previously secured. While waiting for the plant portion to be completed, a second RO notified the Control Room SRO that 2C S/G level was 82 %. The OSM had a third RO secure the CBP's immediately. After the CBP's were stopped, a P-14 signal was received for 2C S/G. No other S/G level reached the P-14 set point.

3.0 LIMITING CONDITION FOR OPERATION (LCO) APPLICABILITY

LCO 3.0.1 LCOs shall be met during the MODES or other specified conditions in the Applicability, except as provided in LCO 3.0.2 and 3.0.7.

LCO 3.0.2 Upon discovery of a failure to meet an LCO, the Required Actions of the associated Conditions shall be met, except as provided in LCO 3.0.5 and LCO 3.0.6.

If the LCO is met or is no longer applicable prior to expiration of the specified Completion Time(s), completion of the Required Action(s) is not required unless otherwise stated.

LCO 3.0.3 When an LCO is not met and the associated ACTIONS are not met, an associated ACTION is not provided, or if directed by the associated ACTIONS, the unit shall be placed in a MODE or other specified condition in which the LCO is not applicable. Action shall be initiated within 1 hour to place the unit, as applicable, in:

a. MODE 3 within 7 hours;

b. MODE 4 within 13 hours; and

c. MODE 5 within 37 hours.

Exceptions to this Specification are stated in the individual Specifications.

Where corrective measures are completed that permit operation in accordance with the LCO or ACTIONS, completion of the actions required by LCO 3.0.3 is not required.

LCO 3.0.3 is only applicable in MODES 1, 2, 3, and 4.

Examination Outline Cross-reference:	Level	RO	SRO
	Tier #	2	
	Group #	1	
	K/A #	013 K3.02	
	Importance Rating	4.3	

Knowledge of the effect that a loss or malfunction of the ESFAS will have on the following: RCS

Proposed Question: Common 13

Given the following conditions:

- An inadvertent SI signal was received during IAE testing.
- The reactor tripped.
- Reactor Trip Breaker "A" did NOT open and has been opened locally.
- BOTH SI RESET pushbuttons have been depressed.
- During realignment per ES-1.1, *SI Termination*, "A" RTB would NOT reclose.

If a large LOCA occurs resulting in an automatic SI signal, which ONE (1) of the following would occur?

A. Both trains of SI will automatically actuate. Core cooling requirements will be maintained throughout the event.

B. ONLY Train B will automatically actuate but will be insufficient to maintain NC System inventory for a large LOCA. Train A must be manually actuated to ensure minimum core cooling requirements will be maintained throughout the event.

C. ONLY Train B will automatically actuate, and will be sufficient to maintain minimum core cooling and NC system inventory requirements. Train A must be manually actuated.

D. Both trains of SI must be manually actuated to ensure minimum core cooling requirements are met.

Proposed Answer: C

Explanation (Optional):

A. Incorrect. With P-4 not reset on Train A, Auto SI will not actuate on that train

B. Incorrect. Either full train will provide adequate core cooling, but credible because actuation is correct.

C. Correct.

D. Incorrect. One train will actuate. Credible because applicant may not understand that P-4 reset is train dependent

Technical Reference(s): ECC-ISE, pg 11, 23 (Attach if not previously provided)

Proposed references to be provided to applicants during examination: None

Learning Objective: ECC-ISE Obj 12 (As available)

Question Source: Bank # _____

Modified Bank # _____ (Note changes or attach parent)

New X

Question History: Last NRC Exam _____

Question Cognitive Level: Memory or Fundamental Knowledge _____

Comprehension or Analysis X

10 CFR Part 55 Content: 55.41 3

55.43 _____

Comments:

CLASSROOM TIME (Hours)

NLO	NLOR	LPRO	LPSO	LOR
2.5	1.5	1.5	1.5	1.5

OBJECTIVES

	OBJECTIVE	NLO	NLOR	LPRO	LPSO	LOR
1	State the purpose of the Engineered Safeguards System.	X	X	X	X	
2	Explain the need and reasoning behind the redundancy requirements for two trains of safety related systems.	X	X	X	X	
3	State how the operator would be aware if more than one protection cabinet door was opened simultaneously.			X	X	X
4	Define the following terms: S_s, S_t, S_P, S_H	X	X	X	X	
5	List the conditions that will initiate the following: • Safety Injection (S_s) • Phase "A" Isolation (S_t) • Containment Spray/Phase "B" Isolation (S_P) • Containment Ventilation Isolation (S_H) • Main Steam Isolation (MSI) • Main Feedwater Isolation (FWI) • VE (Annulus Ventilation) System Start • H_2 Skimmer and Air Return Fan Start (VX)	X	X			
6	List all Safety Injection (S_s) actuation signals, setpoints, logic, and the type of accident each signal provides protection for.	X	X	X	X	X
7	List the pumps that automatically start following a safety injection actuation.	X	X	X	X	X
8	State which Safety Injection (S_s) signal can be blocked.	X	X	X	X	X
9	Explain the reason for blocking a Safety Injection (S_s) signal.	X	X	X	X	X
10	List the interlock and parameter setpoint that allows blocking Safety Injection (S_s).	X	X	X	X	X
11	Describe the operator action needed to block Safety Injection.			X	X	X
12	List the conditions that allow RESET of Safety Injection.			X	X	X

1.0 INTRODUCTION

1.1 Purpose

Objective # 1

The purpose of the Engineered Safeguard Actuation System (ESS) is to prevent or mitigate damage to the Core and Reactor Coolant System components, and ensure Containment integrity in the event the instrumentation and controls of the system sense an accident condition.

1.2 General Description

The ESS System senses selected parameters, determines logic of safety signals and sends actuation signals to provide safety functions which best satisfy the accident requirements.

The Signal Processing Circuits include the Process Instrumentation and Control System, the Solid State Protection System (SSPS), the Engineered Safeguards Test Cabinet and manual actuation circuits.

Monitoring circuits consist of:

- Analog - Three (3) or four (4) redundant channels per parameter and
- Digital - Two (2) redundant logic trains to receive analog signals and determine logic to actuate safety functions.

Objective # 2

Redundant systems are required by the NRC to ensure protection of the core in the event of a single failure. To meet these requirements two (2) redundant and independent trains are used. Only one (1) train is required for safe accident mitigation. Either train is capable of actuating the required safety equipment.

- Sends open signal to normally open cold leg accumulator isolation valves
- Provides Containment Isolation Phase 'A' (S_t)
- Starts ESS AHU's for ND, NS, and KF pumps
- Provides Main Feedwater (CF) Isolation
- Provides Containment Ventilation Isolation (S_H)
- Turbine Trip

Objective # 8 & 9

The Low Pressurizer Pressure Safety Injection signal can be manually blocked to allow cooldown and depressurization of the plant without causing a safety injection actuation.

Objective # 10

In order to block the Low Pressurizer Pressure Safety Injection signal, "2 of 3" pressurizer pressure channels must be less than 1955 psig (P-11). There are two BLOCK pushbuttons on the Control Board provided (1 for each train).

Objective # 11

Once the (P-11) permissive is satisfied, BOTH BLOCK pushbuttons must be depressed in order to prevent the actuation from occurring when the respective setpoint is reached. This actuation BLOCK signal will be automatically unblocked if pressurizer pressure increases above 1955 psig (P-11).

Objective # 12

Each train has a Safety Injection Reset pushbutton on the Control Board. In order to reset safety injection, one minute must have passed since the actuation (60 second timer has timed out) and the train related reactor trip breaker must be open (P-4). Following safety injection reset, only manual safety injection actuation is available. To reinstate the automatic actuation the reactor trip breakers must be reclosed.

NOTE: **Resetting the Safety Injection (S_S) signal will not cause any equipment to stop or any valves to realign.**

Examination Outline Cross-reference:	Level	RO	SRO
	Tier #	2	
	Group #	1	
	K/A #	022 K4.05	
	Importance Rating	2.6	

Knowledge of CCS design feature(s) and/or interlock(s) which provide for the following: Containment cooling after LOCA destroys ventilation ducts

Proposed Question: Common 14

Given the following plant conditions:

- Unit 2 is operating at 50% RATED THERMAL POWER with all systems in normal alignment for this plant condition.
- Containment Pressure has increased from 0.1 psig to 0.6 psig over the last 6 hours during an NC SYSTEM Leak.
- Subsequently a Reactor Trip occurs.
- Containment pressure goes up to approximately 1.2 psig.
- Assume NO OPERATOR action.

Which ONE (1) of the following provides the expected alignment of Containment Ventilation Systems approximately 5 minutes later?

A. The VU AHU(s) and their associated Return Fans are all RUNNING in the configuration that was present prior to the reactor trip.

B. The VL AHU(s) are running in HIGH speed, powered from their Emergency Power Source.

C. The Containment Pipe Tunnel Booster Fans are RUNNING in Low Speed.

D. The Incore Instrumentation Room Ventilation Units are OFF.

Proposed Answer: B

Explanation (Optional):
B is correct. At 1.2 psig, SI will be actuated
A incorrect. VU has a shunt trip on SI, so will not be running.
C incorrect. These fans are shunt tripped on SI
D incorrect. These fans go to emergency power

Technical Reference(s): CNT-VUL, pg 41 (Attach if not previously provided)

Proposed references to be provided to applicants during examination: None

Learning Objective: CNT-VUL, obj 5 (As available)

Question Source: Bank # X(CNTVUL014)

Modified Bank # _____ (Note changes or attach parent)

New _____

Question History: Last NRC Exam _____

Question Cognitive Level: Memory or Fundamental Knowledge _____

Comprehension or Analysis X

10 CFR Part 55 Content: 55.41 7

55.43 _____

Comments:

CLASSROOM TIME (Hours)

NLO	NLOR	LPRO	LPSO	LOR
2.0	2.0	2.0	2.0	1.0

OBJECTIVES

	OBJECTIVE	NLO	NLOR	LPRO	LPSO	LOR
1.	State the purpose of the following Containment Ventilation Subsystems • Upper Containment Ventilation System. • Lower Containment Ventilation System. • Control Rod Drive Ventilation System. • Incore Instrumentation Room Ventilation System.	X	X	X	X	
2.	State the source of cooling water to the upper and lower containment ventilation units.	X	X	X	X	
3.	Discuss the operation of the Containment Ventilation Systems (VU,VL,VR,VT) including the components operating during normal unit operations.	X	X	X	X	
4.	State the automatic actions that occur to the Lower Containment Ventilation units if containment pressure increases to 0.5 psig.	X	X	X	X	X
5.	Discuss the automatic alignment of the Containment Ventilation Systems (VU, VL, VR, VT) following a: • Safety Injection signal. • Blackout signal.	X	X	X	X	X
6.	Concerning the "Reset/Retransfer" switches: • List the units having a "Reset/Retransfer" switch. • Discuss the purpose and operation of the switch.	X	X	X	X	X
7.	Describe the local controls and indications associated with the Containment Ventilation Systems.	X	X	X	X	X
8.	Describe the Control Room controls and indications associated with the Containment Ventilation Systems.			X	X	X

NOTE: If a Loss of Offsite Power occurs prior to a Safety Injection, the transfer to emergency power will not occur. (PIP-2-M94-0027)

The following table provides a basic summary of AHU and Fan status following an emergency signal. Please refer to the appropriate sections of this lesson for more intricate operational details.

	BLACKOUT (on affected bus)	**SAFETY INJECTION**
VL UNITS	BOTH START IN LOW SPEED. (Regardless of Switch Position)	SHUNT TRIPPED OFF, SWAPS TO EMERGENCY POWER, STARTS & RUNS IN HIGH SPEED (Regardless of Switch Position)
PIPE TUNNEL FANS	FAN STARTS AND RUNS IN LOW (Regardless of Switch Position)	SHUNT TRIPPED OFF (Control Power and Indication lost)
PZR BOOSTER FAN	THE TRAIN RELATED FAN WILL START IF SELECTED.	SHUNT TRIPPED OFF, SWAPS TO EMERGENCY POWER AND SELECTED FAN STARTS
S/G BOOSTER FANS	NOT AFFECTED IF BLACKOUT (Not on essential bus) IF LOOP THEY WILL BE OFF (No power – must be manually restarted when power restored)	NOT AFFECTED
VR FANS	BOTH START (Regardless of Switch Position)	ALL FANS SWAP TO EMERGENCY POWER AND START (Regardless of Switch Position)
VT UNITS	START (Regardless of Switch Position) (Can be swapped to "NORM" or "MAX")	ALL FANS SWAP TO EMERGENCY POWER AND START (Regardless of Switch Position) (Can be swapped to "NORM" or "MAX")
VU UNITS	BOTH START (Regardless of Switch Position) (Can be swapped to "NORM" or "MAX")	SHUNT TRIPPED OFF (Control Power and Indication lost)
RA FANS	BOTH START (Regardless of Switch Position)	SHUNT TRIPPED OFF (Control Power and Indication lost)

Examination Outline Cross-reference:	Level	RO	SRO
	Tier #	2	
	Group #	1	
	K/A #	025 K1.02	
	Importance Rating	2.7	

Knowledge of the physical connections and/or cause-effect relationships between the ice condenser system and the following systems: Refrigerant systems

Proposed Question: Common 15

Which ONE (1) of the following describes the effect of 1NFTT-6310, temperature transmitter controlling 1NF-848, (NF Floor Cooling Slab Temp Control Valve) failing LOW with no action taken?

1NF-848 will...

A. OPEN. Excessive sublimation may cause ice buildup around the base of the Ice Condenser Inlet doors and inhibit the doors from opening.

B. OPEN. Increased risk of buckling may occur as a result of freeze/thaw cycles in the Ice Condenser Wear Slab and potentially inhibit doors from opening.

C. CLOSE. Excessive sublimation may cause ice buildup around the base of the Ice Condenser Inlet doors and inhibit the doors from opening.

D. CLOSE. Increased risk of buckling may occur as a result of freeze/thaw cycles in the Ice Condenser Wear Slab and potentially inhibit doors from opening.

Proposed Answer: D

Explanation (Optional):

A and B are incorrect because if the temp input to the valve fails low, it will close because the signal says that less warm glycol is present. B has the correct effect

C is incorrect because sublimation does not cause ice buildup around the lower doors, but is one of the causes of the buckling. Sublimation can be excessive when operating at elevated Ice Condenser temperatures during power operation.

D is correct.

Technical Reference(s): CNT-NF, pg 41, 65 (Attach if not previously provided)

Proposed references to be provided to applicants during examination: None

Learning Objective: CNT-NF-2, 16 (As available)

Question Source: Bank #

Modified Bank # X (2005 McGuire 1130) (Note changes or attach parent)

New

Question History: Last NRC Exam

Question Cognitive Level: Memory or Fundamental Knowledge

Comprehension or Analysis X

10 CFR Part 55 Content: 55.41 7

55.43

Comments:

CLASSROOM TIME (Hours)

NLO	NLOR	LPRO	LPSO	LOR
4	3	3	3	2

OBJECTIVES

	OBJECTIVE	NLO	NLOR	LPRO	LPSO	LOR
1	State the purpose of the Ice Condenser.	X	X	X	X	
2	Given an Ice Condenser alarm, discuss the intent of the alarm.			X	X	X
3	State the purpose of the following components in the ice condenser region: • Turning vanes • Impingement plates • Lower ice condenser doors • Intermediate deck doors • Top deck doors • Ice condenser floor drains. • Wear slab.	X	X	X	X	
4	DELETED					
5	Explain the refrigeration process used to cool the glycol associated with the NF chillers.	X	X	X	X	
6	For the NF System chillers, discuss the action required if bubbles are present in the Freon sightglass.	X	X	X	X	X
7	State the actions to be taken when a NF Chiller compressor trips.	X	X	X	X	X
8	Deleted					
9	List the glycol expansion tank alarms and discuss automatic actions associated with the alarms.	X	X	X	X	X
10	Describe how the Ice Condenser AHUs are prevented from "icing up "	X	X	X	X	

	OBJECTIVE	NLO	NLOR	LPRO	LPSO	LOR
11	Describe how the ice condenser temperature is maintained during normal operation.	X	X	X	X	X
12	State the purpose of the following NF Ice Making System components: • Glycol Recirc Pumps • "Run-Off-Fill" switches • Ice Making Solution Mixing Tank.	X	X	X	X	
13	Discuss the basic flowpath of ice from the ice storage bin to the ice baskets in the ice condenser.	X	X	X	X	
14	Concerning the ice condenser chart recorder: • State the purpose • List the information that can be accessed • Describe the modes of operation.			X	X	X
15	Given a limit and/or precaution associated with an NF System Operating Procedure, discuss its basis and applicability.	X	X	X	X	X
16	State the problems which will occur as a result of operating with elevated Ice condenser temperature.	X	X	X	X	X
17	State the purpose of iodine removal from containment following a LOCA..	X	X	X	X	X
18	Explain how iodine removal from containment atmosphere is accomplished and the effect of (sodium tetraborate) $Na_2B_4O_7$ on the removal process.	X	X	X	X	X
19	Describe how a failure of the ice condenser doors to open on a LOCA will effect containment sump level.	X	X	X	X	X
20	Describe how a failure of the ice condenser doors to open on a HELBIC will effect peak containment pressure.	X	X	X	X	X

2. Verify proper operation of control valve 1NF-848 (NF Floor Cooling Slab Temp Control). If necessary, throttle open bypass around 1NF-848 (NF Floor Cooling Slab Temp Control).

Supplementary Action: Monitor Ice Condenser System and correct any malfunction.

- **"FLOOR COOLING GLYCOL LO TEMP"**

Setpoint: 7°F

Origin: Temperature sensor monitoring floor cooling pumps discharge temperature. (MC1NFTS-6050)

Probable Cause:

1. Failure of control valve 1NF-848 (NF Floor Cooling Slab Temp Control).
2. Failure of NFTT 6310 (Temperature transmitter controlling 1NF-848 (NF Floor Cooling Slab Temp Control)).
3. Maintenance on the Ice Bed may cause transients which could lower glycol temperature faster than control valve 1NF-848 can compensate. (PIP 0-M96-1852)

Automatic Action: None

Immediate Action:

1. IF both Floor Cooling Pumps are running, trip one pump. (PIP 0-M96-1852)
2. Verify proper operation of control valve 1NF-848 (valve should be full closed).
3. IF 1NFTS-6050 (local Indication) indicates <7°F isolate 1NF-848 (NF Floor Cooling Slab Temp Control) and control temperature to clear alarm (12°F is ideal) using bypass. (PIP 0-M96-1852)

Supplementary Action: If valve has failed, inform Maintenance.

3.1.2 Normal Operation

The ice condenser is a passive system which requires no actuation signals. To keep the ice condenser at approximately 15^0F, each unit will have 30 AHUs operating to circulate air in the ice condenser, three or four operating chillers circulating glycol as cooling medium and two operating glycol pumps maintaining it at approximately 15^0F. The ice machines and ice loading equipment will not be operating.

Objective #16

Operating with elevated ice condenser temperatures during normal operation increases sublimation of the ice which requires ice replacement during outages.

(Sublimation is the process of turning a solid directly to a vapor without passing through the liquid phase.) Operating with elevated temperatures also creates a cyclic freeze/thaw cycle which has been identified with buckling/elevating the ice condenser wear slab which in turn has resulted in cracks adjacent to the inner portal frame. The combination of the elevation of the wear slab and cracks in the inner portal frame has shown to prevent the ice condenser doors from opening or exceeding their design opening torque.

The cyclic freeze/thaw cycle identified is the movement of the frost line in the foam concrete of the ice condenser floor. This movement is caused by the increase in temperature of the lower part of the floor during power operation. In the warmer spots the frost line moves up more, and water is free to work into cracks in the concrete.

When the plant cools during outages the frost line moves lower and more of the water freezes causing the ice to expand pushing the floor upward. The ice bays nearest the higher temperature areas in containment (near the S/G compartments) under go the greatest freeze/thaw amplitude and resulted in the greatest amount of door opening force when tested. Allowing elevated temperatures in the ice condenser aggravates the freeze/thaw cycle.

1 Pt. 1NF-848, NF Floor Cooling Slab Temp Control has failed closed.

Which one of the following is an operational concern with 1NF-848 failing closed?

A. The air in the lower ice condenser would be less dense and allow the ice condenser doors to open.

B. Excessive sublimation could cause ice build up around the base of the ice condenser lower inlet doors and inhibit doors from opening.

C. The air in the lower ice condenser would be denser and not allow the ice condenser doors to open at the desired pressure.

D. Buckling will occur as a result of the freeze/thaw cycles in the ice condenser wear slab and as a result inhibit doors from opening.

Examination Outline Cross-reference:	Level	RO	SRO
	Tier #	2	
	Group #	1	
	K/A #	026 K3.02	
	Importance Rating	4.2	

Knowledge of the effect that a loss or malfunction of the CSS will have on the following: Recirculation spray system

Proposed Question: Common 16

Given the following:

- A LOCA has occurred on Unit 2.
- Containment Pressure indicates 4 psig and rising.
- NC Pressure indicates 1400 psig and going down.
- The breaker for 2NS-3B, (Train 'B' NS Pump Suction valve from FWST) has tripped, and cannot be reclosed.
- All other equipment is operating as designed.

Which ONE (1) of the following describes the effect on the unit?

A. NS Pump "B" will have no suction source until initiation of Containment Sump Recirculation.

B. Train 'B' Containment Sump Isolation Valve 2NS-1B will NOT open.

C. Train 'B' Containment Sump Isolation Valves 2NS-1B and 2NI-184B, will NOT open when required.

D. Train 'B' Containment Sump Isolation Valve 2NI-184B, will NOT open when required.

Proposed Answer: B

Explanation (Optional):

A is incorrect. Valve is normally open. Credible because applicant may consider other suction valve, which is normally closed

B is correct. 2NS-3B is interlocked with 2NS-1B. 2NS-1B will only open if 2NS-3B is closed

C and D are incorrect because 2NI-184B is not the interlocked valve, but credible because valve performs same function.

Technical Reference(s): ECC-NS, pg 13, 17, 21 (Attach if not previously provided)

Proposed references to be provided to applicants during examination: None

Learning Objective: ECC-NS-6 (As available)

Question Source: Bank # _____
Modified Bank # _____ (Note changes or attach parent)
New X

Question History: Last NRC Exam _____

Question Cognitive Level: Memory or Fundamental Knowledge _____
Comprehension or Analysis X

10 CFR Part 55 Content: 55.41 7
55.43 _____

Comments:

CLASSROOM TIME (Hours)

NLO	NLOR	LPRO	LPSO	LOR
1.0	1.0	1.0	1.0	1.0

OBJECTIVES

	Objective	NLO	NLOR	LPRO	LPSO	LOR
1	State the purpose of the Containment Spray (NS) System.	X	X	X	X	
2	Draw the NS System per Drawing 7.1 Containment Spray System, valve numbers and instrumentation not required.	X	X	X	X	
3	Describe the local indications and controls associated with the NS System.	X	X			
4	Describe the controls and indications associated with the NS System.			X	X	X
5	Describe the signals and permissives required to initiate the NS System.	X	X			
6	Describe the signals, setpoints, permissives, and logic required to initiate and reset NS System.			X	X	X
7	Describe the operation of the NS Pump room Air Handling Unit	X	X	X	X	X
8	Describe the NS System Operation (including automatic alignments).	X	X	X	X	X
9	Evaluate local plant parameters to determine any abnormal system conditions that may exist.	X	X			
10	Evaluate plant parameters and status indicators to determine any abnormal system conditions that may exist.			X	X	X
11	Given a limit and/or precaution associated with the NS System, discuss it's basis and applicability.	X	X	X	X	X
12	List the power supplies of the NS Pumps.	X	X	X	X	

3. Diversion of a portion of the recirculation flow from the Residual Heat Removal System to additional spray headers completes the spray system heat removal capability. This operation occurs after Safety Injection Cold Leg Recirculation Switchover has been completed and Containment pressure remains greater than 3 psig, but no earlier than 50 minutes after the Reactor Trip.

The passive portions of the spray systems located within the Containment are designed to withstand, without loss of functional performance, the post-accident Containment environment conditions and to operate without benefit of maintenance. All of the active components of the Containment Spray System are located outside the steam-air environment produced by the accident.

The spray headers which are located in the upper Containment volume are separated from the reactor and reactor coolant loops by the operating deck and inner wall of the ice bed. These spray headers are therefore protected from missiles originating in the lower compartment of the Containment.

2.0 COMPONENT DESCRIPTION

2.1. Sources of Water available for Containment Spray System

2.1.1. Refueling Water Storage Tank (FWST)

The FWST serves as a source of emergency borated cooling water for injection. It is normally used to fill the refueling canal for refueling operations. However, during all other operating periods it is aligned to the suction of the Safety Injection, the Residual Heat Removal and the Containment Spray pumps.

One valve per train (NS3 & 20) isolates the NS system from the FWST. These valves are normally open, aligning the system in the injection mode.

An interlock prevents opening the FWST suction valve (NS3 or NS20) unless the same trains containment sump valve (NS1 or NS18) is closed. Open/Close control switches for these valves are located in the Control Room.

2.1.2. Containment Sump

When the FWST water inventory is depleted, the Containment Sump will provide water for the NS pumps.

The containment sump structure consists of an outer trash rack made of stainless steel grating to prevent large debris from reaching the fine inner screen. A fine mesh inner screen is provided to prevent particles larger than .206" in diameter from passing through.

One valve per train (NS1 & 18) isolates the Containment Sump. These valves are normally aligned closed and would be opened to align the system for recirculation when the FWST reaches the low-low level setpoint (33").

An interlock prevents opening a Containment Sump Isolation Valve (NS1 or NS18) unless the Containment Sump Isolation Valve (NI184 or NI185) is open and the FWST Suction Valve (NS3 or NS20) is closed.

2.2. Containment Spray Pumps

Two identical containment spray pumps are installed in the Containment Spray System. Each pump is sized to deliver sufficient spray flow to the containment atmosphere through the spray heat exchangers, to meet containment cooling requirements, when supplemented with partial flow from a residual heat removal pump. The pumps deliver 3400 gpm to the spray headers. Pump discharge pressure is ≈200 psig.

Objective #12

The two containment spray pumps are of the vertical single stage, end-suction, side discharge centrifugal type driven by electric motors. The 400 hp, 4160 VAC, 60 cycle motors, are powered from the ETA/ETB Busses. The NS pumps have a start/stop pushbutton in the Control Room for manual operation.

The design head of the pumps is sufficient to continue operation at rated capacity with a minimum level in the Refueling Water Storage Tank against a head equivalent to the sum of the design pressure of the Containment, the head to the upper-most nozzles, line losses and nozzle pressure losses. Pump motors are direct-coupled and large enough for the maximum power requirement of the pump. Materials of construction suitable for use in mild boric acid solutions (such as stainless steel or equivalent corrosion resistant material) are used. The Containment Spray System is designed so that adequate net positive suction head (NPSH) is provided to the Containment Spray Pumps.

A flow element, located downstream of each Containment Spray Pump, provides indication of pump flow in the Control Room.

Objective #7

Each pump room has an Air Handling Unit (AHU) to provide a suitable environment for the NS Pump. The AHU starts when the pump starts or a safety injection signal is actuated. Cooling water for the AHU is provided by RN.

2.4. Spray Pump Test Line

There is one lock closed 4" manually operated globe valve (NS8, NS25), on each branch of the test circuit. These may be opened to perform a pump test without spraying water into the Containment.

A 4" manually operated globe valve (NS70) in the common main test line may be used to throttle the flow.

2.5. Check Valves

Check valves are installed to maintain the riser pipe sections full of water to prevent water hammer when the system actuates.

2.6. Containment Isolation Valves (NS12, 15, 29, 32, 38 & 43)

There are four (4) normally closed, motor-operated, 8" gate valves, (two in each pump discharge line) which are interlocked to open on an "Sp" signal (with a CPCS signal), to permit spraying into the Containment. These four valves supply different spray headers.

The NS Pumps are interlocked with their respective discharge valves to prevent dead-heading the pumps. Opening either valve will allow the pump to start and closing both valves will trip the pump. If power is removed from both valves, the pump will not start due to relaying (regardless of valve position).

In order to perform the pump surveillance test with the discharge valves closed, local action is required at the CPCS Panels. A key must be used to place the control switch for the pump in the "TEST" position. The potentiometer is then adjusted until permissive is received that allows the pump to be started. The test circuit is completely parallel to any automatic or manual signal for the NS components. Therefore, entry into the ESF Tech Spec (3.3.2) is NOT required due to placing these components in "TEST". However, due to closure of the NS discharge valves, entry into the Containment Spray System (3.6.6) would be required. (Refer to PIP #M-03-04179)

The ND spray header isolation valves (NS38 & 43) are manually aligned by the operator (if required) after establishing cold-leg recirculation. An interlock prevents opening the header supply valves unless the containment sump valves (NI184 & 185) are open. Since these valves do not receive any automatic open/close signals, they must be manually closed by the operator when containment pressure decreases.

1NS-38B and 1NS-43A have valve bonnet equalization lines to eliminate concerns over pressure locking of the valves (MM-7868). These containment isolation valves are flex-wedge gate valves and have the potential to trap high pressure water and air between the disks. The valves in the equalization lines are locked open.

Examination Outline Cross-reference:	Level	RO	SRO
	Tier #	2	
	Group #	1	
	K/A #	039 A2.01	
	Importance Rating	3.1	

Ability to (a) predict the impacts of the following mal-functions or operations on the MRSS; and (b) based on predictions, use procedures to correct, control, or mitigate the consequences of those malfunctions or operations: Flow paths of steam during a LOCA

Proposed Question: Common 17

Given the following conditions:

- A LOCA has occurred.
- Off-Site power was lost.
- NCS pressure is 1100 psig and stable.
- Containment pressure is 5 psig and stable.
- The crew is performing actions contained in EP 1/A/5000/ES-1.2, Post LOCA Cooldown and Depressurization.

Which ONE (1) of the following describes the method that will be used to perform cooldown of the NC System?

Perform cooldown using…

A. Condenser steam dumps at maximum achievable rate until ND can be placed in service. Place steam dumps in Bypass Interlock when the P-12 status light is lit. NC system cooldown rate limits do NOT apply for this condition.

B. Condenser steam dumps at less than 100 degrees F per hour until ND can be placed in service. Place steam dumps in Bypass Interlock when the P-12 status light is lit.

C. S/G SM PORVs at the maximum achievable rate until ND can be placed in service. NC system cooldown rate limits do NOT apply for this condition.

D. S/G SM PORVs at less than 100 degrees F per hour until ND can be placed in service.

Proposed Answer: D

Explanation (Optional):

A. Incorrect. Condenser steam dumps are not available because Circ Water pumps tripped on LOOP. Credible because it is the normal method of cooldown.

B. Incorrect. Rate is correct.

C. Incorrect. Rate is incorrect. Credible because initial cooldown in E-3 has no restriction.

D. Correct.

Technical Reference(s): ES-1.2, 13-16 (Attach if not previously provided)
STM-IDE, pg 27

Proposed references to be provided to applicants during examination: None

Learning Objective: EP-E1, Obj 4 (As available)

Question Source: Bank # X (WTSI)
Modified Bank # _____ (Note changes or attach parent)
New _____

Question History: Last NRC Exam _____

Question Cognitive Level: Memory or Fundamental Knowledge _____
Comprehension or Analysis X

10 CFR Part 55 Content: 55.41 10
55.43 _____

Comments:

CLASSROOM TIME (Hours)

NLO	NLOR	LPRO	LPSO	LOR
N/A	N/A	5.0	5.0	4.0

OBJECTIVES

SEQ	OBJECTIVE	NLO	NLOR	LPRO	LPSO	LOR
1	Explain the purpose for each procedure in the E-1 series. EPE1001			X	X	
2	Discuss the entry and exit guidance for each procedure in the E-1 series. EPE1002			X	X	
3	Discuss the mitigating strategy (major actions) of each procedure in the E-1 series. EPE1003			X	X	X
4	Discuss the basis for any note, caution or step for each procedure in the E-1 series. EPE1004			X	X	X
5	Given the Foldout page discuss the actions included and the basis for these actions. EPE1005			X	X	X
6	Given the appropriate procedure, evaluate a given scenario describing accident events and plant conditions to determine any required action and its basis. EPE1006			X	X	X
7	Discuss the time critical task(s) associated with the E-1 series procedures including the time requirements and the basis for these requirements. EPE1007			X	X	X

Objective #6

Condenser Available Interlock (C-9)

This interlock blocks steam dump to the condenser if vacuum is low or there is insufficient circulating water flow. If Pressure switch 1ZMPT5030, located in condenser Section A, indicates condenser pressure is greater than 20" vacuum and at least two Circulating Water Pump breakers are closed, C-9 will be satisfied and permissive light C-9 COND AVAILABLE TO STEAM DUMP will be illuminated.

Objective #6

Loss of Load Interlock (C-7A)

Turbine load is measured by the turbine impulse chamber pressure Channel II transmitter SMPT5220.

NOTE: In order to meet the single failure criteria . Impulse Pressure Channel 1 is used to develop the T_{ref} signal used in the Load Rejection Controller.

Turbine pressure (FIRST STAGE TURBINE PRESSURE II) goes to the plant computer and to control board indicator. The derivative part of the circuit has the output proportional to the size of a step change in pressure or to rate of change for a ramp pressure change. Output is zero for an unchanging pressure signal. The Condenser arming bistable will actuate on a 10% step or > 5%/min ramp load decrease. (C7A). C-7A, LOSS OF LOAD INTLK COND DUMP will illuminate.

ACTION/EXPECTED RESPONSE	RESPONSE NOT OBTAINED

NOTE After the Low Pressure Steamline Isolation signal is blocked, maintaining steam pressure negative rate less than 2 PSIG per second will prevent a Main Steam Isolation.

11. **Initiate NC System cooldown to Cold Shutdown as follows:**

__ a. **IF** ND in RHR mode, **THEN** use ND System to cooldown while maintaining rate in NC T-Colds less than 100°F in an hour.

__ b. Check "C-9 COND AVAILABLE FOR STEAM DUMP" status light (1SI-18) - LIT.

b. Perform the following:

__ 1) Ensure Main Steam Isolation reset.

__ 2) Ensure SM PORVs reset.

__ 3) Dump steam using intact S/G SM PORVs while maintaining cooldown rate in NC T-Colds less than 100°F in an hour.

__ 4) **GO TO** Step 12.

ACTION/EXPECTED RESPONSE	RESPONSE NOT OBTAINED

NOTE
- NC pump trip criteria based on subcooling does not apply after starting a controlled cooldown.
- After the Low Pressure Steamline Isolation signal is blocked, maintaining steam pressure negative rate less than 2 PSIG per second will prevent a Main Steam Isolation.

10. **Initiate NC System cooldown as follows:**

__ a. Determine required core exit temperature based on lowest ruptured S/G pressure:

LOWEST RUPTURED S/G PRESSURE (PSIG)	CORE EXIT T/Cs (°F)
GREATER THAN 1099	520 (519 ACC)
1000 - 1099	508 (507 ACC)
900 - 999	494 (493 ACC)
800 - 899	480 (479 ACC)
700 - 799	463 (462 ACC)
600 - 699	444 (444 ACC)
500 - 599	423 (422 ACC)
400 - 499	396 (395 ACC)
300 - 399	362 (361 ACC)
280 - 299	353 (353 ACC)

b. Check condenser available:

__ b. **GO TO** RNO for Step 10.f.

__ • "C-9 COND AVAILABLE FOR STEAM DUMP" status light (1SI-18) - LIT

__ • MSIV on intact S/G(s) - OPEN.

ACTION/EXPECTED RESPONSE	RESPONSE NOT OBTAINED
10. (Continued)	
__ c. Check S/Gs 1B and 1C - INTACT.	c. **IF** 1B **OR** 1C S/G is ruptured, **THEN** do not continue until steam is isolated to TD CA pump from ruptured S/G per one of the following: __ • Local isolation of SA line (per Step 4.c) OR __ • Tripping TD CA pump stop valve (per Step 4.c).
d. Perform the following to place steam dumps in steam pressure mode: __ 1) Place "STM PRESS CONTROLLER" in manual. __ 2) Adjust "STM PRESS CONTROLLER" output to equal "STEAM DUMP DEMAND" signal. __ 3) Place "STEAM DUMP SELECT" in steam pressure mode.	
__ e. **WHEN** "P-12 LO-LO TAVG" status light (1SI-18) lit, **THEN** place steam dumps in bypass interlock.	

ACTION/EXPECTED RESPONSE	RESPONSE NOT OBTAINED
10. (Continued)	
__ f. Dump steam from intact S/G(s) to condenser at maximum rate while attempting to avoid a Main Steam Isolation.	f. Perform the following: __ 1) Ensure at least one Pzr PORV isolation valve is open. 2) **IF** VI is lost, **OR** a Phase B Isolation has occurred, **THEN** align N_2 to PORVs by opening: __ • 1NI-430A (Emerg N2 From CLA To 1NC-34A) __ • 1NI-431B (Emerg N2 From CLA To 1NC-32B & 36B). __ 3) **IF** Pzr pressure is greater than 1955 PSIG, **THEN** depressurize to 1900 PSIG using Pzr PORV. __ 4) Depress "BLOCK" on Low Pressure Steamline Isolation block switches. __ 5) Maintain NC pressure less than 1955 PSIG. __ 6) Ensure Main Steam Isolation reset. __ 7) Ensure SM PORVs reset. 8) **IF** any intact SG SM PORV isolation valve is closed, **AND** associated SM PORV is operable, **THEN** perform the following: __ a) Open SM PORV isolation valve(s). __ b) **IF** isolation valve will not open, **THEN** dispatch operator to open isolation valve. (RNO continued on next page)

Examination Outline Cross-reference:	Level	RO	SRO
	Tier #	2	
	Group #	1	
	K/A #	059 A1.07	
	Importance Rating	2.5	

Ability to predict and/or monitor changes in parameters (to prevent exceeding design limits) associated with operating the MFW controls including: Feed Pump speed, including normal control speed for ICS

Proposed Question: Common 18

With the Unit at 80% power, which ONE (1) of the following describes the **CF Pump Speed Control** response, if the Feedwater Header Pressure transmitter failed high over 10 minutes?

The FWPT speed would:

A. Increase until it tripped on overspeed

B. Decrease, but S/G level would be maintained at programmed level

C. Increase until a P-14 signal is generated

D. Decrease until a Lo Lo S/G reactor trip signal is generated

Proposed Answer: D

Explanation (Optional):
A is incorrect but credible because speed is affected, but this failure is in the opposite direction
B is incorrect but credible because it is partially correct. The FRVs would be unable to control SG level with this failure, however.
C is incorrect but credible because speed is affected, but failure in opposite direction
D is correct. With no action, Feed pressure greater than Steam pressure will call for the CF Pump to continue to slow down

Technical Reference(s): SF-C08 Pg 10 (Attach if not previously provided)
CF-IWE, pg 9, 11

Proposed references to be provided to applicants during examination: None

Learning Objective: CF-IWE-2 (As available)

Question Source:	Bank #	X	
	Modified Bank #		(Note changes or attach parent)
	New		
Question History:	Last NRC Exam		
Question Cognitive Level:	Memory or Fundamental Knowledge		
	Comprehension or Analysis	X	
10 CFR Part 55 Content:	55.41	4	
	55.43		

Comments:

CLASSROOM TIME (Hours)

NLO	NLOR	LPRO	LPSO	LOR
	2.0	2.0	2.0	0.5

OBJECTIVES

	OBJECTIVE	NLO	NLOR	LPRO	LPSO	LOR
1	State the purpose of the Main Feedwater Pump Speed Control System.		X	X	X	
2	Describe the input signal for the DP program development circuitry.		X	X	X	
3	Describe the feedwater-to-steam differential pressure (DP) program values from no load to full load.		X	X	X	
4	Describe the signal sources that make up "Actual DP".		X	X	X	
5	Describe the sequence of events that occurs when the Main Feedwater Pump Speed Control System responds to an increase or decrease in plant power level.		X	X	X	
6	Describe the three modes of operation of the control system, including system inputs utilized for each mode.			X	X	
7	Describe how flow balancing is accomplished in AUTO, including the use of the BIAS signal.			X	X	
8	State the five major inputs to the control system.			X	X	
9	Describe the Exlar governor valve actuators.			X	X	
10	Describe the three major components (OCS, SPC, LEC) of the control system.			X	X	

1.0 INTRODUCTION

1.1 Purpose

Objective # 1

Reference Fig. 7.1. *The purpose of the Feedwater Pump Speed Control System is to provide a variable speed demand signal to the main feedwater pump turbines which is programmed to maintain the Feedwater Regulating (Flow Control) Valves in their optimum throttling position.* The system also operates the Feedwater Pumps in conjunction with the Feedwater Control Valves to maintain steam generator water level with maximum efficiency.

1.2 General Description

The Steam Generator Level Control System computes a desired level that is based on reacto power. To maintain this desired level, a control signal is developed. The signal functions to position the Feedwater Regulating Valves, and thus control feed flow, for each of the steam generators. The Main Feed Pump Speed Control System is designed to complement the operation of the Water Level Control system. It computes a desired pump speed that is based on auctioneered HI NC delta T (reactor power). This signal functions to regulate the steam flow to the main feed pump turbines, controlling their speed. Variation of pump speed in this fashion results in:

- Reduced erosion of feedwater regulating valve flow control surfaces.
- Improved feed regulating valve flow control (throttling) characteristics.

Variable speed main feed pumps are favored because they are more economical in large plants. There is less lost energy when the speed is matched with the desired Differential Pressure (Delta P or DP).

Steam header pressure is compared to feed pump discharge pressure generating an Actual DP signal. The DP signal is compared to a programmed setpoint determined from auctioneered HI NC delta T (reactor power) and generates the speed demand signal. Corrections may be added for flow imbalance between the pumps.

2.0 COMPONENT DESCRIPTION

2.1 General Operation

Objective # 6

The system utilizes three basic control loops to control the feedpump. The feedwater loop, the governor loop, and actuator loop. These loops and their relationship are shown on drawing 4.1. Each of these loops is a proportional plus integral contol loop (P+I). Basically these are cascading control loops in that the feedwater control loop output is the input to the governor loop and the output of the governor loop is the input to the actuator loop. This assumes that the controls are in auto. The input for the feedwater loop is the feedwater demand signal which is the programmed delta P for the power level of the reactor as sensed by auctioneered hi NC loop delta T.

The final output of the actuator loop goes to the actuator positioners (LP and HP) to drive the governor valves (LP and HP) to the desired position.

There are three control modes that can be selected by the operator: Auto, Man Speed and Man DVP (Direct Valve Position).

Objective # 2,6

In Auto, the system will utilize auctioneered hi NC loop delta T to determine the desired delta P between the feedwater system header pressure and steam header pressure.

Objective # 3

There is an " AMSAC Avoidance " section of the delta P curve. This is shown on drawing 7.3. The purpose of this change is to have a lower delta P at approx 30% power to approx 70% power in order for the main feedwater regulating valves to be further open at about 40% power to avoid the 25% valve position that can trigger the AMSAC circuit.

Objective # 7

In auto it is also possible to have the feedpumps carry unequal loads by utilizing the bias circuitry for the control system. This allows the operator to enter a " bias " value of up to 3.5 % thru the A feedpump OCS. This allows up to 7% difference in feedwater demand between the two pumps since a " negative value " bias of the same value is sent to the B feedpump. Therefore if a 2% bias is selected thru the A feedpump OCS then a +2% boast is given to the A feedwater demand and a -2% decrease is sent to the B feedwater demand for a 4 % difference in demand signals. If both pumps are in AUTO, then a flow matching circuit is in operation. This circuit will attempt to give a "boost" to their respective pumps feedwater module (auto circuit) output in order to bring suction flows together. This circuit has a ramp limiter in order to prevent sudden changes due to suction flow mismatches. This circuit is only active if both pumps are in auto.

In Auto, several conditions will cause a " Reject to Manual ". A loss of both speed channels used by the governor control loop, referred to as α and β, will cause control to revert to Man DVP. Ordinarily either channel may be used but a loss of both denies the governor loop feedback on speed. If a failure of the actual delta P is sensed, control will revert to Man Speed. Failure of the actual delta P can be sensed as a sudden rate of change, referred to as slew rate, or above hi and lo limits. On a feedpump trip, control will revert to Man DVP.

Objective # 6

In Man Speed control, a speed demand is manually input into the governor control loop by the operator at the OCS. The operator controls the feedpump speed in order to control feedwater header pressure and/or flow manually. While in Man Speed control, the operator can change the speed setting in one of two ways : Jog or Ramp. In Jog the speed setpoint is changed by depressing the increase or decrease pushbuttons on the OCS and the system will respond to each increase or decrease of the speed setpoint. In Ramp, the operator will set a "Target " speed setpoint and when desired, press the "GO" pushbutton to have the control system go to the new speed setpoint at a specified acceleration rate.

3.2 Abnormal Operation

3.2.1 Demonstration of CF Pump Speed Control System to Input Failures

INSTRUCTOR

1) Divide the trainees into two teams.
2) The teams will alternate after each failure.
3) Each team will diagnosis a failure.

A. CF Header Pressure Transmitter Fails to 1000PSIG

	RESET to IC-37	MOL, 75% power, Equilibrium Xe. Train B in operation
	Simulator to **RUN**	

INSTRUCTOR

1) Using the simulator poster 7.1 Feedwater Pump Speed Control, assist the team in predicting the effect CF header pressure transmitter failing low will have on the CF Pump Speed Control System.
2) Then have the team describe how the plant will be effected by the CF Pump Speed Control System's response to the failure.

	INSERT XMT – CF033, Severity level = 1000, Ramp Time = 60, Delay time = 10,	PCF-5140 CF Header Pressure decreases to 1000 psig (also drives CF Header Pressure meter on 1MC-10)

3) Point out the following as the event occurs:
   - CF header pressure meter on 1MC-10 decreases to 1000 PSIG
   - Both CF Pumps discharge pressures and speed increasing
   - S/G CF Control Valves throttling towards the close direction
   - Annunciator "CF PUMP DISCHARGE HI PRESS" on 1AD8, A4
   - "A" and "B" CF pumps trip on high discharge pressure
   - "A" and "B" CF PUMPS TRIPPED annunciators on 1AD5, E5 and F5
   - Annunciator "LOSS OF ALL CF PUMPS TURB TRIP" on 1AD1, B5
   - First out Annunciator "TURB TRIP CAUSES RX TRIP" on 1FO-1, F5

After reactor trips	**FREEZE** the Simulator	

Examination Outline Cross-reference:	Level	RO	SRO
	Tier #	2	
	Group #	1	
	K/A #	059 A3.02	
	Importance Rating	2.9	

Ability to monitor automatic operation of the MFW, including: Programmed levels of the S/G

Proposed Question: Common 19

Given the following:

- Reactor power is 40% during a load increase to 100%.
- All system controls are in their normal alignments.

Which ONE (1) of the following describes the input to SG level program and the SG level that the CF system is currently maintaining?

A. Average of 4 Power Range NI inputs; 49%

B. Auctioneered High Power Range input; 49%

C. Average of 4 Power Range NI inputs; 55%

D. Auctioneered High Power Range input; 55%

Proposed Answer: B

Explanation (Optional):
A is incorrect. Average is not the input. Power is correct.
B is correct. Program level is ramped from 39% to 65% over 0-100% power. At 40% power, program level will be at about 49% level
C incorrect. High power is the input, and 55% is too high. Level is credible because it represents 65% (100% power program level) minus 10% instead of 39% (0% power program level) plus 10%
D incorrect. Input is correct but level is incorrect for same reason as C

Technical Reference(s): CF – IFE, pg 19,21 (Attach if not previously provided)

Proposed references to be provided to applicants during examination: None

Learning Objective: CF-IFE-6 (As available)

Question Source: Bank # _____
Modified Bank # _____ (Note changes or attach parent)
New X

Question History: Last NRC Exam _____

Question Cognitive Level: Memory or Fundamental Knowledge _____
Comprehension or Analysis X

10 CFR Part 55 Content: 55.41 4
55.43 _____

Comments:

CLASSROOM TIME (Hours)

NLO	NLOR	LPRO	LPSO	LOR
NA	2	2	2	2

OBJECTIVES

	OBJECTIVE	NLO	NLOR	LPRO	LPSO	LOR
1.	State the purpose of the S/G Level Control System.		X	X	X	
2.	Draw the S/G Level Control System per training handout MC-CF-IFE-5.		X	X	X	
3.	Draw the S/G Level Program per training handout MC-CF-IFE-4and label all axis.		X	X	X	
4.	Explain the phenomenon of S/G level shrink and swell.		X	X	X	
5.	Explain the reasons for S/G minimum and maximum water levels, including how this relates to S/G programmed level.		X	X	X	X
6.	Discuss the input signals to the S/G level error, FF-SF mismatch, and the Nuclear Power controlling circuit.		X	X	X	X
7.	Describe the operation of the valves controlled by S/G Level Control System.		X	X	X	X
8.	Evaluate plant parameters and status indicators to determine any abnormal system conditions that may exist.			X	X	X
9.	Describe the protection (signals and setpoints) associated with S/G level. (logic not required)		X	X	X	X
10.	Describe the controls and indications associated with the S/G Level Control System.		X	X	X	X
11.	For any S/G Level Control System input signal failure, determine the effect and evaluate operator action to be taken.			X	X	X

2.2. Steam Generator Level Error

2.2.1. Purpose is to provide a level error signal based upon the difference between program level (based upon nuclear power) and actual level.

Objective #6 & #10

2.2.2. Program Level

The programmed Level Setpoint is calculated for each steam generator as a function of nuclear power (Refer to Figure 2, Nuclear Power High Select Circuit, below). The nuclear power signal is derived from the Nuclear Instrumentation System power range channels. Channels N-41/ 43 (auctioneered high) provide S/G A&D program and Channels N-42/ 44 (auctioneered high) provide S/G B&C program. This is provided the 'PR TO SG PROGRAM LEVEL CHANNEL DEFEAT' select switch is in the 'NORMAL' position. If the need arises, Channels N-41/43 can feed all four S/G level programs, by going to the 'Defeat 42-44' position, or Channels N-42/44 can feed all four S/G programs by going to the 'Defeat 41-43' position.

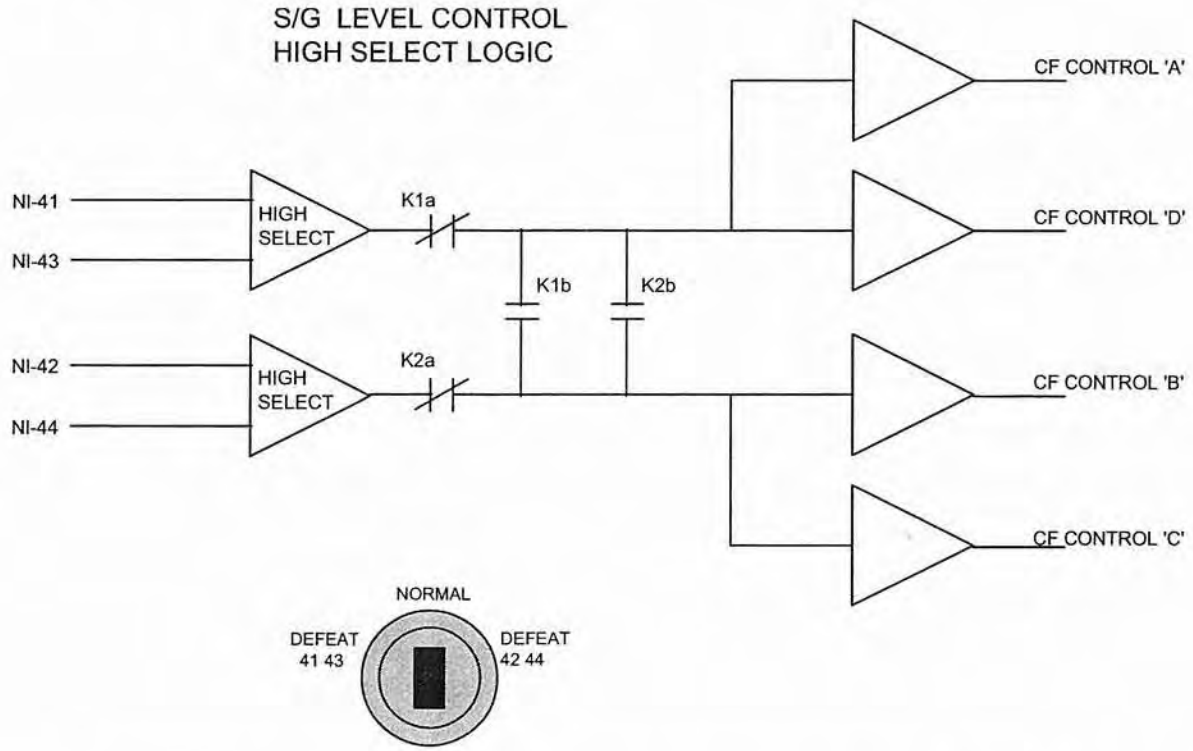

FIGURE 2, NUCLEAR POWER HIGH SELECT CIRCUIT (MC-CF-IFE-2) 3/31/95

The programmed level setpoint is recorded on a 3 pen recorder along with the two WR levels for the two S/Gs that the setpoint is applicable to. For example, one recorder would have 'A' & 'D' WR levels and the programmed level setpoint used for 'A' & 'D' S/G. The programmed level setpoint, as a function of nuclear power, is shown below on Figure 3, S/G Level Program.

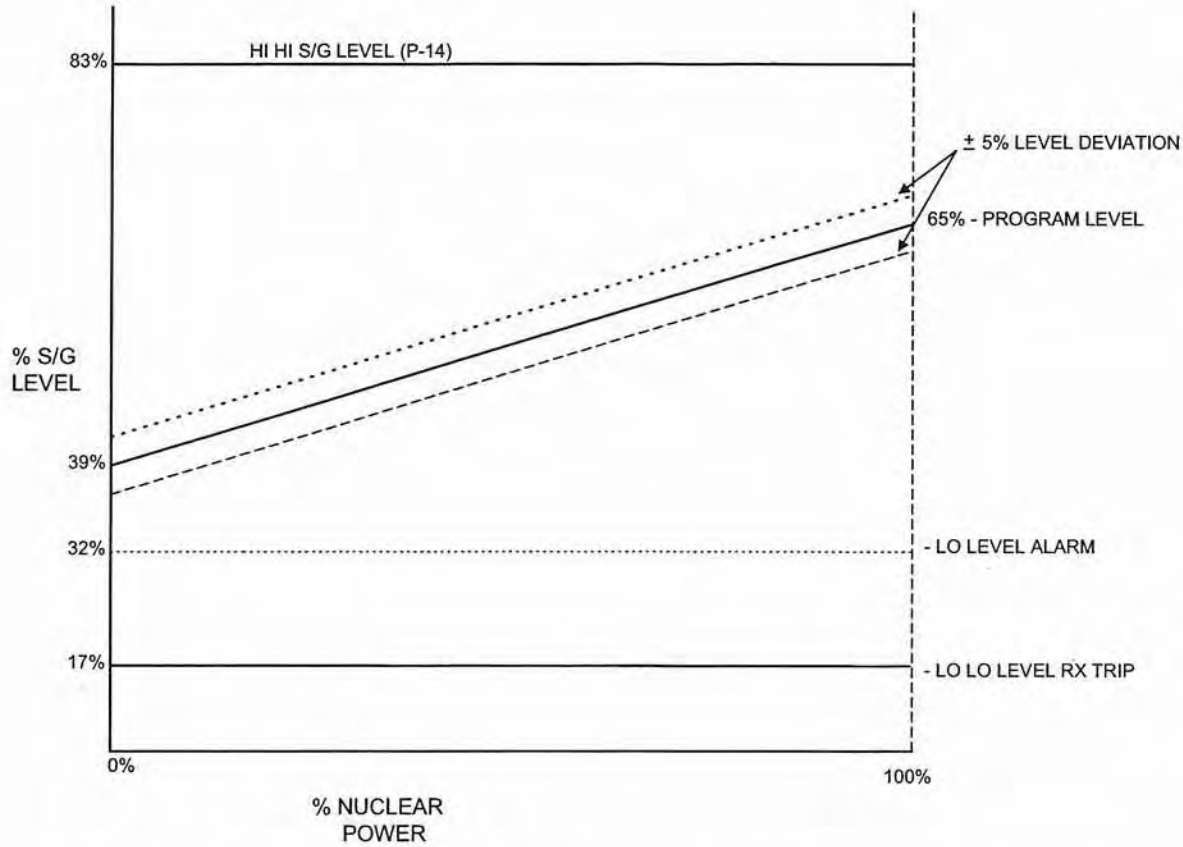

FIGURE 3, S/G LEVEL PROGRAM (MC-CF-IFE-4) 8/18/97

Objective #3
Objective #9

The logic for a S/G lo-lo level reactor trip is 2/4 channels on 1/4 S/G's. The S/G LO-LO Level Reactor Trip Setpoint is 16.7% from 0 - 100% power. The same setpoint for the lo-lo level trip also generates annunciator 'S/G A (B,C,D) LO-LO LEVEL ALERT' on any one channel. If S/G level is less than the Lo Level Alarm of 31.7%, annunciator 'S/G A (B,C,D) LO LEVEL ALERT' will alarm on any one of two channels (channels 3 & 4 are the two channels that feed this alarm).

Examination Outline Cross-reference:	Level	RO	SRO
	Tier #	2	
	Group #	1	
	K/A #	061 G2.1.32	
	Importance Rating	2.4	

Conduct of Operations: Ability to explain and apply all system limits and precautions.

Proposed Question: Common 20

Given the following:

- Unit 1 is performing a plant heatup.
- NC Temperature is 425 degrees F.
- NC pressure is 920 psig.

Which ONE (1) of the following describes the MINIMUM CA pump(s) required for this condition?

A. One Motor Driven Pump only

B. The Turbine Driven Pump only

C. Two Motor Driven Pumps

D. Two Motor Driven Pumps and the Turbine Driven Pump.

Proposed Answer: D

Explanation (Optional):

A. Incorrect. One motor driven pump required in Mode 4 if SGs being used for heat removal, per note in CA procedure.

B. Incorrect. Credible because applicant can reasonably believe the requirement for CA Pump operability is one pump. (TD or MD)

C. Incorrect. Credible because the applicant can reasonably believe that the requirement for CA operability is MD pumps.

D. Correct. In Modes 1, 2, 3, all 3 pumps are required

Technical Reference(s): TS 3.7.5 (Attach if not previously provided)
CF-CA, pg 39

Proposed references to be provided to applicants during examination: None

Learning Objective: CF-CA -14 (As available)

Question Source: Bank # _____
Modified Bank # _____ (Note changes or attach parent)
New X

Question History: Last NRC Exam _____

Question Cognitive Level: Memory or Fundamental Knowledge X
Comprehension or Analysis _____

10 CFR Part 55 Content: 55.41 10
55.43 2

Comments:

	OBJECTIVE	NLO	NLOR	LPRO	LPSO	LOR
13	Concerning CA Pump Discharge Check Valve leakage: • Describe how the operator determines if the check valves are leaking. • Describe the significance of leakage through the CA pump Discharge check valves. • Describe the action to be taken if leakage is identified through the CA pump Discharge check valves.	X	X	X	X	X
14	Given a Limit and/or Precaution associated with an operating procedure, discuss its basis and applicability.	X	X	X	X	X
15	Concerning the Technical Specifications related to the CA System;					
	• Given the LCO title, state the LCO (including any COLR values) and applicability.			X	X	X
	• For any LCOs that have action required within one hour, state the action.			X	X	X
	• Given a set of parameter values or system conditions, determine if any Tech Spec LCOs is(are) not met and any action(s) required within one hour.			X	X	X
	• Given a set of plant parameters or system conditions and the appropriate Tech Specs, determine required action(s).			X	X	X
	• Discuss the basis for a given Tech Spec LCO or Safety Limit.				X	*
	* SRO Only					

Objective # 14

3.1.1 Limits and Precautions

- **CA System operability requires CA Storage Tank temperature 40° F - 130° F.**
- **Makeup flow to CACST should be limited to less than 50 gpm and aligned from only one unit.**
- **TD CA Pump required to be operable per ITS 3.7.5 prior to entry into Mode 3.**
- **IF in Mode 4 with S/Gs being relied upon for heat removal, one Motor Driven CA Pump is required to be available.**

3.2 Abnormal and Emergency Operation

The CA system will provide water to the steam generators in order to maintain a heat sink during certain accident conditions. **The CA Motor Driven pumps start on steam generator low-low level, trip of both main feedwater pumps, AMSAC signal, safety injection, and a blackout signal. The CA Turbine Driven pump starts on low-low level in two steam generators, and a blackout** (greater than 8 seconds). **The Turbine Driven CA pump will also start on SSF steam generator wide range low-low level.**

3.2.1 Sequencer Operation during Blackout and Safety Injection

Objective # 4

If a Blackout occurs followed by a Safety Injection, the Sequencer will reset the start signal to the Turbine Driven CA Pump. **The pump will continue to run with the start signal removed since the pump must be manually reset after auto-start**.

If the Safety Injection occurs first or coincident with the Blackout, the Turbine Driven pump will NOT start. This only affects the Blackout start signal and not the 2/4 Low-Low SG Level Auto start signal or SSF wide range Low-Low SG Level start signal.

3.2.2 Modulating Control Valve Reset

Objective # 4

The modulating control valve circuitry controls the solenoids supplying air to selected safety related control valves. These control valves are normally controlled by other non-safety controllers and instrumentation. In order to prevent these non-safety controls from causing the control valves to assume an improper position after a safety event, these safety related solenoid valves will vent air off the control valve to cause it to assume its "safe" position. These solenoid valves de-energize upon receipt of any auto-start signal.

3.7 PLANT SYSTEMS

3.7.5 Auxiliary Feedwater (AFW) System

LCO 3.7.5 Three AFW trains shall be OPERABLE.

----------NOTE----------
Only one AFW train, which includes a motor driven pump, is required to be OPERABLE in MODE 4.

APPLICABILITY: MODES 1, 2, and 3,
MODE 4 when steam generator is relied upon for heat removal.

ACTIONS

----------NOTE----------
LCO 3.0.4.b is not applicable when entering MODE 1.

CONDITION	REQUIRED ACTION	COMPLETION TIME
A. One steam supply to turbine driven AFW pump inoperable.	A.1 Restore steam supply to OPERABLE status.	7 days AND 10 days from discovery of failure to meet the LCO
B. One AFW train inoperable in MODE 1, 2 or 3 for reasons other than Condition A.	B.1 Restore AFW train to OPERABLE status.	72 hours AND 10 days from discovery of failure to meet the LCO

(continued)

ACTIONS (continued)

CONDITION	REQUIRED ACTION	COMPLETION TIME
C. Required Action and associated Completion Time for Condition A or B not met. OR Two AFW trains inoperable in MODE 1, 2, or 3.	C.1 Be in MODE 3. AND C.2 Be in MODE 4.	6 hours 12 hours
D. Three AFW trains inoperable in MODE 1, 2, or 3.	D.1 ----------NOTE---------- LCO 3.0.3 and all other LCO Required Actions requiring MODE changes are suspended until one AFW train is restored to OPERABLE status. ---------- Initiate action to restore one AFW train to OPERABLE status.	 Immediately
E. Required AFW train inoperable in MODE 4.	E.1 Initiate action to restore AFW train to OPERABLE status.	Immediately

SURVEILLANCE REQUIREMENTS

SURVEILLANCE		FREQUENCY
SR 3.7.5.1	----------NOTE---------- Not applicable to automatic valves when THERMAL POWER is ≤ 10% RTP. ---------- Verify each AFW manual, power operated, and automatic valve in each water flow path, and in both steam supply flow paths to the steam turbine driven pump, that is not locked, sealed, or otherwise secured in position, is in the correct position.	31 days
SR 3.7.5.2	----------NOTE---------- Not required to be performed for the turbine driven AFW pump until 24 hours after ≥ 900 psig in the steam generator. ---------- Verify the developed head of each AFW pump at the flow test point is greater than or equal to the required developed head.	In accordance with the Inservice Testing Program
SR 3.7.5.3	----------NOTE---------- Not applicable in MODE 4 when steam generator is relied upon for heat removal. ---------- Verify each AFW automatic valve that is not locked, sealed, or otherwise secured in position, actuates to the correct position on an actual or simulated actuation signal.	18 months

(continued)

SURVEILLANCE REQUIREMENTS (continued)

SURVEILLANCE		FREQUENCY
SR 3.7.5.4	----------NOTE---------- 1. Not required to be performed for the turbine driven AFW pump until 24 hours after ≥ 900 psig in the steam generator. 2. Not applicable in MODE 4 when steam generator is relied upon for heat removal. ---------- Verify each AFW pump starts automatically on an actual or simulated actuation signal.	18 months

Table 1.1-1 (page 1 of 1)
MODES

MODE	TITLE	REACTIVITY CONDITION (k_{eff})	% RATED THERMAL POWER[a]	AVERAGE REACTOR COOLANT TEMPERATURE (°F)
1	Power Operation	$\geq$ 0.99	> 5	NA
2	Startup	$\geq$ 0.99	$\leq$ 5	NA
3	Hot Standby	< 0.99	NA	$\geq$ 350
4	Hot Shutdown[b]	< 0.99	NA	350 > T_{avg} > 200
5	Cold Shutdown[b]	< 0.99	NA	$\leq$ 200
6	Refueling[c]	NA	NA	NA

(a) Excluding decay heat.

(b) All reactor vessel head closure bolts fully tensioned.

(c) One or more reactor vessel head closure bolts less than fully tensioned.

Examination Outline Cross-reference:	Level	RO	SRO
	Tier #	2	
	Group #	1	
	K/A #	061 K6.02	
	Importance Rating	2.6	

Knowledge of the effect of a loss or malfunction of the following will have on the AFW components: Pumps

Proposed Question: Common 21

Given the following on Unit 2:

- A reactor trip from 100% power has occurred.
- The TD CA Pump tripped on overspeed upon starting.
- Bus 1ETA locked out.

Assuming NO action has been taken, which ONE (1) of the following describes the status of the CA system?

CA is being supplied to…

A. A and B SGs at up to 450 gpm

B. C and D SGs at up to 450 gpm.

C. A and B SGs at up to 900 gpm.

D. C and D SGs at up to 900 gpm.

Proposed Answer: B

Explanation (Optional):
A is incorrect. A and B SGs are supplied by "A" MD CA Pump, which is not running if 1ETA is dead
B is correct.
C is incorrect. Wrong SGs and 900 gpm is capacity of TD CA Pump
D is incorrect. Correct SGs, but wrong capacity

Technical Reference(s): CF-CA, pg 13 (Attach if not previously provided)

Proposed references to be provided to applicants during examination: None

Learning Objective: CF-CA-4,7,8 (As available)

Question Source: Bank # _____
Modified Bank # _____ (Note changes or attach parent)
New X

Question History: Last NRC Exam _____

Question Cognitive Level: Memory or Fundamental Knowledge _____
Comprehension or Analysis X

10 CFR Part 55 Content: 55.41 4
55.43 _____

Comments:

CLASSROOM TIME (Hours)

NLO	NLOR	LPRO	LPSO	LOR
3.0	2.0	3.0	3.0	1.5

OBJECTIVES

	OBJECTIVE	NLO	NLOR	LPRO	LPSO	LOR
1	State the purpose of the CA System.	X	X	X	X	
2	Sketch the system drawing (Fig. 7.1) including all major components and valves, show all tie-ins to associated systems.	X	X	X	X	
3	Describe all CA suction supply sources, including venting requirements and actions.	X	X	X	X	
4	Discuss the auto-start of the motor driven and turbine driven auxiliary feedwater pumps, including concurrent BO/S_S signals and BO followed by S_S.	X	X	X	X	X
5	Describe the CA pump minimum flow and pump runout protection.	X	X	X	X	
6	Describe the function of the Auto Start Defeat Switches; include permissives.	X	X	X	X	X
7	Describe the power supplies and steam supplies for the CA pumps.	X	X	X	X	
8	State the flow rates of the CA pumps.	X	X	X	X	
9	Describe the sources of make-up to the Auxiliary Feedwater Storage Tank, include destination of overflow from the Auxiliary Feedwater Storage Tank.	X	X	X	X	X
10	Describe the interlock between the CA motor driven pump and the associated train RN pump. Include why the interlock is required.	X	X	X	X	X
11	Describe the interlock between the CA pump suction pressure and the RN assured makeup valves.	X	X	X	X	X
12	Describe the interlock between the RN assured makeup valves (CA-15, CA-18) and the DG Hx Inlet Valve. Include why the interlock is required.	X	X	X	X	X

1.0 INTRODUCTION

1.1 Purpose

Objective # 1

The auxiliary feedwater system is provided as a backup for the main feedwater system. **It is designed as a means to dissipate heat from the Reactor Coolant System when normal systems are not available. The auxiliary feedwater system may also be used in normal plant startup and shutdown, as main feedwater, when the flow is less than 3% maximum design feedwater flow.**

1.2 General Description

Objective # 2

Refer to Figure 7.1, 7.2, 7.3, 7.13. The CA system assures required feedwater flow to the steam generators for reactor coolant thermal energy dissipation when the CF system is not available through loss of power or other malfunctions. The CA system is required to operate until normal feedwater flow is restored or until the reactor coolant temperature is lowered to the point where the ND system can be utilized. The CA system is designed to start automatically for any event requiring emergency feedwater. Since the CA system is the only source of makeup water to the steam generators for reactor coolant heat removal when the main feedwater system becomes inoperable, it has been designed with redundancy and diversity. The CA system contains two motor driven pumps and one steam turbine driven pump for each unit.

2.0 COMPONENT DESCRIPTION

2.1 Motor Driven CA Pumps

Objective # 4, 7, 8

The motor driven CA pumps are powered from essential power, ETA (pump A) and ETB (pump B). Each motor driven pump has a design flow rate of 450 gpm and is capable of supplying two steam generators. CA pump "A" supplies steam generators "A" and "B" while CA pump "B" supplies steam generators "C" and "D."

Refer to Figure 7.12. **The auto-start signals for the CA Motor Driven pumps are:**

- **2/4 detectors low-low level in any one SG (17%)**
- **Trip of both Main Feedwater pumps**
- **AMSAC**
    - **Both Feedwater pumps tripped**
    - **Loss of flow to 3/4 SGs**
- **S_S signal**
- **Blackout signal**

Examination Outline Cross-reference:	Level	RO	SRO
	Tier #	2	
	Group #	1	
	K/A #	062 K2.01	
	Importance Rating	3.3	

Knowledge of bus power supplies to the following: Major system loads

Proposed Question: Common 22

Unit 1 is shutdown in mode 3 with the following alignment of NCPs:

- All NCPs are running and powered from their normal sources
- Buses TA and TC are running off bus-line 1A
- Buses TB and TD are running off bus-line 1B

Which ONE (1) of the following sequences describes status of the B NCP pump and bus TB when:

1. Power is lost to the normal 6900 V supply to bus TB (1ATB) due to a generator-switchyard protective lockout.
2. Power is restored to 1ATB after the fault has been cleared.

A. 1.) NCP B continues to run as bus TB automatically fast transfers to the alternate power supply.
2.) NCP B continues to run and bus TB automatically fast transfers back the normal power supply.

B. 1.) NCP B continues to run as bus TB automatically fast transfers to the alternate power supply.
2.) Bus TB does not automatically shift back to its normal supply.

C. 1.) NCP B trips and bus TB automatically slow transfers to its alternate power supply.
2.) Bus TB does not automatically shift back to its normal power supply.

D. 1.) NCP B continues to run as bus TB automatically slow transfers to the alternate power supply.
2.) NCP B trips and bus TB automatically slow transfers back to the normal power supply.

Proposed Answer: B

Explanation (Optional):

A. Incorrect because the bus will not transfer back to normal supply

B. Correct.

C. Incorrect because bus will not slow transfer. Fast transfer occurs. Second half of statement is correct.

D incorrect because fast transfer will occur to alternate and there is no transfer back to normal

Technical Reference(s): EL-EP, pg 63, 65, 69 (Attach if not previously provided)

Proposed references to be provided to applicants during examination: None

Learning Objective: EL-EP, objective 24 (As available)

Question Source: Bank # X(ELEPN07)

Modified Bank # _____ (Note changes or attach parent)

New _____

Question History: Last NRC Exam _____

Question Cognitive Level: Memory or Fundamental Knowledge _____

Comprehension or Analysis X

10 CFR Part 55 Content: 55.41 7

55.43 _____

Comments:

	OBJECTIVE	NLO	NLOR	LPRO	LPSO	LOR
12	List the normal operating voltages at both the low and high side of the Main Step-Up Transformers (Unit 1 and 2).	X	X	X	X	X
13	Describe the "primary" and the "secondary" use for the Main Step-Up Transformers.	X	X	X	X	X
14	List the Auxiliary Transformers, for each unit, and their normal operating voltages at both the low and high sides.	X	X	X	X	X
15	Describe the design loads each Auxiliary Transformer is sized to carry.	X	X	X	X	X
16	List the three components that make up the Main Generator Circuit.	X	X	X	X	X
17	Explain the advantage(s) of using Generator Breakers.	X	X	X	X	X
18	Describe the six steps of electricity production from the PMG to the Generator Output.	X	X	X	X	X
19	State the purpose for both the 6900 V and 13.8 KV power systems.	X	X	X	X	X
20	List the normal and alternate power supplies to the 6900 V buses.	X	X	X	X	X
21	Describe the Kirk-Key Interlock associated with the 6900 V feeder breakers to SATA (SATB) and state the purpose of this Kirk-Key arrangement.	X	X	X	X	X
22	List the normal and alternate power supplies to Auxiliary Transformers SATA and SATB.	X	X	X	X	X
23	State the two reasons for providing Safety Breakers on the Reactor Coolant Pumps.	X	X	X	X	X
24	Describe the Automatic Fast Bus Transfer feature associated with the 6900 V switchgear.	X	X	X	X	X
25	Describe the Automatic Slow Bus Transfer feature associated with the 6900 V switchgear	X	X	X	X	X

Objective # 23

Each reactor coolant pump has two supply breakers, a 6900V breaker and a Safety Breaker located in the Auxiliary Building.

The initial 6900 V power sources for the reactor coolant pumps 1(2) TA , 1(2) TB, 1(2) TC, and 1(2) TD feed the **Reactor Coolant Pump Safety Breakers** located within the Auxiliary Building. **These Safety Breakers are utilized to provide:**

1. **Redundant fault and overload protection for the feeders entering containment.**
2. **A QA Condition 1 disconnecting device for each NC pump. The Safety Breaker starts/stops the Reactor Coolant Pump.**

Interlocks require that at least three of the four 6.9 KV NC Pump Breakers be closed before any one of the four Safety Breakers can be closed. This ensures that the interlock is defeated which will open all four Safety Breakers if 2/4 6.9 KV Busses lose power. If 2/4 6.9 KV Busses lose power, a signal is sent to all four Safety Breakers to open. This releases the electrical lock that the power system has on the remaining Safety Breakers so the NC Pumps associated with them can use the stored energy in their fly wheels to insure NC System flow continues through the Reactor Core following a loss of power to the pumps.

The 6900 KV switchgear constitutes a part of each units preferred power source to the 4160 V switchgear.

A fault condition within Relay Protection Zones A or B will require total clearing of the faulted zone.

This will include the normal supply breaker for the two switchgear assemblies.

Each 6900 V switchgear assembly has an automatic transfer scheme that will automatically transfer power from the normal source to the alternate source, provided the alternate source is available.

This automatic transfer will occur whenever the normal incoming breaker is tripped by a generator-switchyard protective lockout (86A/1A, 86A/1B, 86B/1A, 86B/1B, 86TTA/1A, 86TTA/1B, 86TTB/1A, or 86TTB/1B).

Automatic fast bus transfer circuitry will permit a rapid transfer, within an eight cycle dead time. The reactor coolant pumps, which are energized from the 6900 V switchgear assemblies, are designed to withstand the over-voltage which may be generated during such an automatic transfer. The possible over voltage incurred will not cause a seizure of the NCP motor, which would result in a rapid loss of reactor coolant flow. If the transformer power supplies are initially out of sync, or if one or both affected buses NCP's are off, the automatic transfer initiated will be of the time-delayed type to allow the residual bus voltage to decay to an acceptable level.

Objective # 24

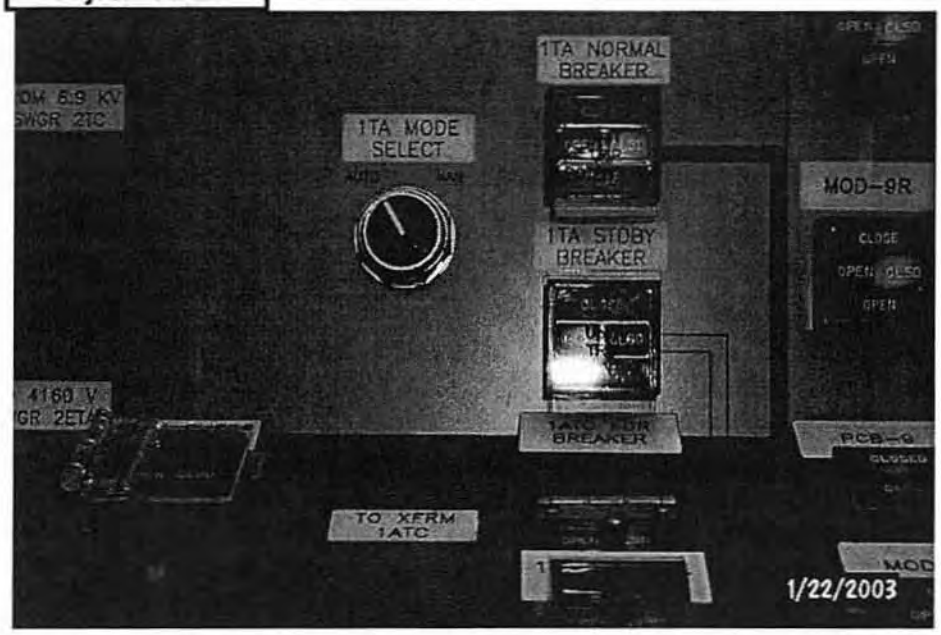

An Automatic Fast Bus Transfer will operate in 8 cycles if the following conditions are met:

1. **The (AUTO/MANUAL) Mode select switches on the main control board in the control must be in AUTO**
2. **The Normal and Standby sources are in synchronization. (Synchronism is determined automatically in the transfer circuit by the position of breaker's auxiliary contacts. These contacts reflect the position of the unit generator/switchyard circuit breakers.)**
2. **The Reactor Coolant Pumps on the two affected switchgear are both operating.**

An Automatic Fast Bus Transfer of power will then take place transferring power from one electrical zone to the other (ex., zone 1A to zone 1B)

<u>NOTE</u>: If a fast bus transfer is to be performed on TA and/or TC (Zone A) then NCP's A and C must be running. Similarly, for a fast bus transfer on TB and/or TD (Zone B), NCP's B and D must be running.

Objective # 26

Normal bus transfer between the two 6900 V sources is initiated at the discretion of the control board operator. This type of transfer is a **Manual Hot Bus Transfer** (commonly referred to as a Live Bus Transfer). This type transfer allows the operator to transfer to the alternate supply without interrupting power to the switchgear loads. This transfer scheme is set up such that, when the alternate power source breaker is closed, the normal power source breaker automatically opens within 1/4 second.

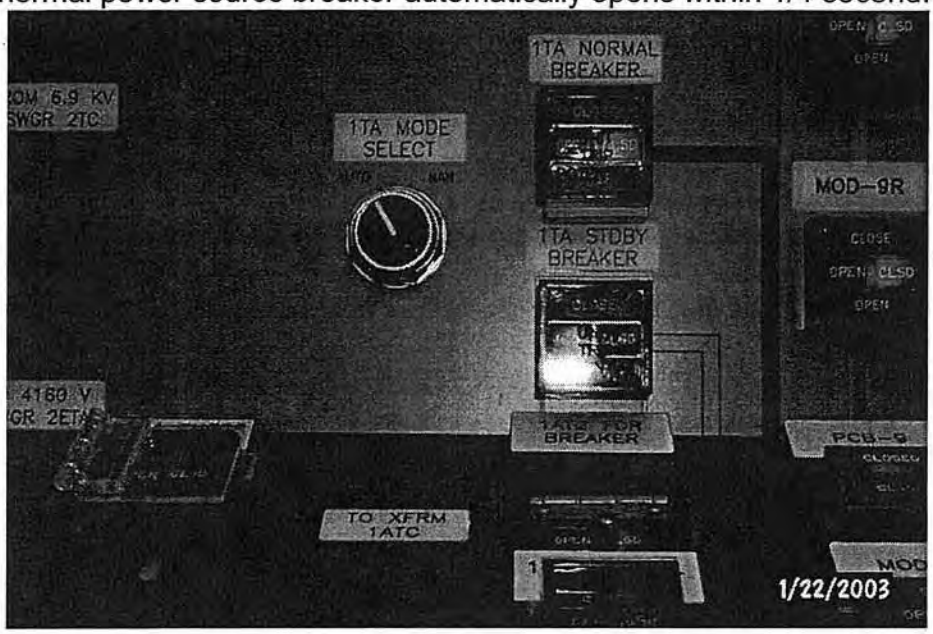

A Manual Hot Bus Transfer (Live Bus Transfer) can only take place when:

1) **Both power sources are available.**
2) **Both power sources are in-synchronization.**
3) **Automatic / Manual Mode Selector Switch(es), located on the Main Control Board (1MC-11) within the Control Room, must be in MANUAL.**

If any of the 6900 V buses are completely de-energized (both the normal and standby breakers open), the bus can be energized by selecting manual for the normal or alternate breaker and then depressing the close push-button to energize the bus. Energization will occur as long as there are no lockouts, in effect, preventing breaker operation.

Examination Outline Cross-reference:	Level	RO	SRO
	Tier #	2	
	Group #	1	
	K/A #	063 A3.01	
	Importance Rating	2.7	

Ability to monitor automatic operation of the dc electrical system, including: Meters, annunciators, dials, recorders, and indicating lights

Proposed Question: Common 23

Given the following conditions on Unit 1:

- The unit is at 100% power.
- The following annunciator is received in the Control Room:
  - BATT EVCA GROUND

Which ONE (1) of the following describes the indication available if the ground is on the positive leg of battery EVCA, and the resulting operation of the DC Bus?

A. Ground indication light on the back of the Main Control Board will be brightly lit. Equipment malfunctions are NOT expected with a ground on one side.

B. Ground indication light on the Main Control Board will be brightly lit. Equipment malfunctions are expected with a ground on either the positive OR negative terminal.

C. Ground indication light on the back of the Main Control Board will be extinguished. Equipment malfunctions are NOT expected with a ground on one side.

D. Ground indication light on the back of the Main Control Board will be extinguished. Equipment malfunctions are expected with a ground on either the positive OR negative terminal.

Proposed Answer: A

Explanation (Optional):

A is correct. Annunciator indicates that light on back of MCB will be brightly lit. Design of DC Bus is to operate on 1 but not both legs with a ground

B incorrect. Designed to operate with a ground on 1 terminal, but credible because a ground is not desirable on any part of the system

C incorrect. Light will be lit. Credible because applicant may assume that light will be out due to no voltage drop from positive leg to ground, resulting in light going out.

D incorrect. Light will be lit. Credible for same reason as C, and second part credible for same reason as B

Technical Reference(s): 1AD11-B-3 (Attach if not previously provided)
EL-EPL, pg 47

Proposed references to be provided to applicants during examination: None

Learning Objective: EL-EPL-3 (As available)

Question Source: Bank # _____
Modified Bank # _____ (Note changes or attach parent)
New X

Question History: Last NRC Exam _____

Question Cognitive Level: Memory or Fundamental Knowledge X
Comprehension or Analysis _____

10 CFR Part 55 Content: 55.41 7
55.43 _____

Comments:

CLASSROOM TIME (Hours)

NLO	NLOR	LPRO	LPSO	LOR
3.0	3.0	2.0	2.0	2.0

OBJECTIVES

	OBJECTIVE	NLO	NLOR	LPRO	LPSO	LOR
1	State the purpose of the 125 VDC and 120 VAC Vital Instrumentation and Control Power Systems.	X	X	X	X	
2	Draw a simplified composite of the 125 VDC and 120 VAC Vital Instrumentation and Control Power Systems as provided in Training Drawing 7.2, Simplified 125 VDC and 120 VAC Vital Instrumentation and Control Power Drawing.	X	X	X	X	
3	Provide a general description of the 125 VDC Vital Instrumentation and Control Power System.	X	X	X	X	
4	List the typical loads powered from the 125 VDC Vital Instrumentation and Control Power System Distribution Centers.	X	X	X	X	
5	Provide a general description of the 120 VAC Vital Instrumentation and Control Power System.	X	X	X	X	
6	List the typical loads powered from the 120 VAC Vital Instrumentation and Control Power System Power Panelboards.	X	X	X	X	
7	Describe the basis for the sizing (loading) of the battery charger associated with the 125 VDC Vital Instrumentation and Control Power System.	X	X	X	X	
8	Discuss the normal loading demands associated with the 125 VDC Battery Chargers for the Vital Instrumentation and Control Power System.	X	X	X	X	
9	Describe any of the Kirk-Key Interlocks associated with the 125 VDC Vital Instrumentation and Control Power System and state the purpose of the Kirk-Key arrangement.	X	X	X	X	X
10	Explain how the Standby Battery Charger is used during an equalizing charge of a 125 VDC Battery for the Vital Instrumentation and Control Power System.	X	X	X	X	X

Periodic Testing

The batteries were initially tested and designed, at the factory, to carry the continuous emergency loads of its own vital bus plus the loads of another battery (in a backup capacity) for one hour. In addition, each battery is tested on-site at prescribed intervals as defined by Technical Specifications.

A test discharge is performed, at least once, every 18 months to verify the battery can:

- Supply and maintain all of the actual emergency loads for 1 hour

or

- Supply a dummy load of greater than or equal to 440 amperes for 60 minutes while maintaining the battery terminal voltage greater than or equal to 105 volts.

At least once, every 60 months, the battery capacity is verified to be at least 80% of the manufacturer's rating during performance of the test discharge.

In-service surveillance of the batteries includes visual inspection for leaks, corrosion or deterioration, specific gravity readings, electrolyte level, and individual cell voltage readings.

Anytime the battery capacity has degraded (dropped 10%, of rated capacity, from its average, based on previous performance tests, or is below 80% of the manufacturer's rating) or reached 85%, of its expected service-life, an annual discharge test will be performed (the 18 month test would now become an annual test).

A floating charge is normally maintained on the vital batteries and an equalizer charge is periodically performed to maintain the battery cell voltages necessary for emergency service. In addition, an equalizer charge is required following any test discharge of a battery.

Ground Detection

The DC system is designed to operate ungrounded. Detectors are provided to indicate when there is a ground existing on any leg of the system. A grounded feeder could be caused by a faulted cable, relay fault, or an abnormal component failure. A ground on only one leg of the DC system should not cause equipment malfunction(s). However, a ground on two legs of the system could result in equipment failure; especially during alignments which require cross-tying the buses.

Therefore, control room annunciators (1AD11 B-3, C-3, E-3, and F-3) and computer alarms continuously monitor the DC buses (EVCA, EVCB, EVCC, and EVCD) for grounds. Should an alarm be activated, two white lamps are provided, on the electrical boards (backside of the main control boards) as indication of ground detection relay operation. One is designated "battery ground positive leg" and the other is designated "battery ground negative leg". These lamps burn dimly under normal conditions and they burn brightly under grounded conditions.

Nomenclature: **BATT EVCA GROUND** Window: **B3**

Setpoint: 5000 Ohms

Origin: Ground detector on Distribution Center EVDA

Probable Cause: Positive **OR** negative ground

Automatic Action: None

> **NOTE:** Lamps burn dimly under normal conditions and brightly under a battery ground condition. Volts to Gnd Pos Leg Test indicates magnitude of a negative ground **AND** Volts to Gnd Neg Leg Test indicates magnitude of a positive ground.

Immediate Action:

1. Observe lamps on Relay Board 1EB5 (Gen. Differential & Batt EVCA Relays):
   - Battery EVCA Ground Positive Leg
   - Battery EVCA Ground Negative Leg
2. Check ground magnitude:
   A. Depress "Batt. EVCA Volts to Gnd Pos Leg Test".
   B. Observe DC Volts on "Battery EVCA Voltage to Ground".
   C. Depress "Batt. EVCA Volts to Gnd Neg Leg Test".
   D. Observe DC Volts on "Battery EVCA Voltage to Ground".
3. Log type of ground (positive or negative) **AND** magnitude of ground in RO Log.

Continue On Next Page

Examination Outline Cross-reference:	Level	RO	SRO
	Tier #	2	
	Group #	1	
	K/A #	064 G2.4.4	
	Importance Rating	4.0	

Emergency Procedures / Plan Ability to recognize abnormal indications for system operating parameters which are entry-level conditions for emergency and abnormal operating procedures.

Proposed Question: Common 24

Given the following:

- Unit 1 is operating at 100% power.
- D/G 1A is out of service.
- A loss of off-site power occurs.
- The crew enters E-0, Reactor Trip or Safety Injection.
- While determining if SI is required, D/G 1B trips.

Which ONE (1) of the following actions is required?

A. Immediately enter AP/1/A/5500/07, Loss of Electrical Power. Return to E-0 when actions are complete.

B. Attempt to restore 1B D/G in E-0; continue in E-0 until directed to transition to another procedure.

C. Refer to AP/1/A/5500/07, Loss of Electrical Power, while continuing in E-0.

D. Immediately enter ECA-0.0, Loss of all AC Power.

Proposed Answer: D

Explanation (Optional):

A is incorrect. Would be correct for D/G out if not in EOPs

B is incorrect. No D/Gs available, go straight to ECA-0.0

C is incorrect. Could perform if only 1 D/G out of service

D is correct. In EOPs, go to ECA-0.0 any time both emergency busses are deenergized

Technical Reference(s): ECA-0.0 entry (Attach if not previously provided)

Proposed references to be provided to applicants during examination: None

Learning Objective: ECA 0.0, obj 2 (As available)

Question Source: Bank # _____
Modified Bank # _____ (Note changes or attach parent)
New X

Question History: Last NRC Exam _____

Question Cognitive Level: Memory or Fundamental Knowledge _____
Comprehension or Analysis X

10 CFR Part 55 Content: 55.41 10
55.43 _____

Comments:

CLASSROOM TIME (Hours)

NLO	NLOR	LPRO	LPSO	LOR
		1.5	1.5	1.0

OBJECTIVES

SEQ	OBJECTIVE	NLO	NLOR	LPRO	LPSO	LOR
1	Explain the purpose for each procedure in the ECA-0 series. EPECA001			X	X	
2	Discuss the entry and exit guidance for each procedure in the ECA-0 series. EPECA002			X	X	
3	Discuss the mitigating strategy (major actions) of each procedure in the ECA-0 series. EPECA003			X	X	X
4	Discuss the basis for any note, caution or step for each procedure in the ECA-0 series. EPECA004			X	X	X
5	Describe the immediate actions and include the RNO when appropriate. EPECA005			X	X	X
6	Given the appropriate procedure, evaluate a given scenario describing accident events and plant conditions to determine any required action and its basis. EPECA006			X	X	X
7	Discuss the time critical task(s) associated with the ECA-0 series procedures including the time requirements and the basis for these requirements. EPECA007			X	X	X

A. Purpose

This procedure provides actions to respond to a loss of all AC power.

B. Symptoms or Entry Conditions

This procedure is entered from:

- EP/1/A/5000/E-0 (Reactor Trip Or Safety Injection), Step 4, on the indication that all AC emergency busses are de-energized.
- Directly from symptoms that both emergency AC busses are deenergized.

ACTION/EXPECTED RESPONSE	RESPONSE NOT OBTAINED

C. Operator Actions

__ 1. **Monitor Foldout page.**

2. **Check Reactor Trip:**	**Perform the following:**
__ • All rod bottom lights - LIT	__ a. Trip reactor.
__ • Reactor trip and bypass breakers - OPEN	b. **IF** reactor will not trip, **THEN**:
__ • I/R amps - GOING DOWN.	__ • Implement EP/1/A/5000/F-0 (Critical Safety Function Status Trees).
	__ • **GO TO** EP/1/A/5000/FR-S.1 (Response To Nuclear Power Generation/ATWS).
3. **Check Turbine Trip:**	**Perform the following:**
__ • All throttle valves - CLOSED.	__ a. Trip turbine.
	b. **IF** turbine will not trip, **THEN**:
	__ 1) Place turbine in manual.
	__ 2) Close governor valves in fast action.
	3) **IF** governor valves will not close, **THEN** close:
	__ • All MSIVs
	__ • All MSIV bypass valves.
__ 4. **Check 1ETA and 1ETB - ENERGIZED.**	**Perform the following:**
	__ a. **IF** both busses de-energized, **THEN GO TO** EP/1/A/5000/ECA-0.0 (Loss Of All AC Power).
	__ b. **WHEN** time allows, **THEN** try to restore power to de-energized bus **PER** AP/1/A/5500/07 (Loss of Electrical Power) while continuing with this procedure.

Examination Outline Cross-reference:	Level	RO	SRO
	Tier #	2	
	Group #	1	
	K/A #	073 A4.03	
	Importance Rating	3.1	

Ability to manually operate and/or monitor in the control room: Check source for operability demonstration

Proposed Question: Common 25

While performing daily surveillance checks on 1EMF-33, CSAE, you determine that the OPERATE light is OFF.

Which ONE (1) of the following actions is required in accordance with PT/1/A/4600/003, Daily Surveillance items?

A. Perform a source check to ensure the EMF alarm setpoints remain valid.

B. Perform a source check to determine if the EMF is operable.

C. Place the sample pump in RUN and determine if the OPERATE light illuminates.

D. Place the sample Pump in OFF and then back to RUN to reset the OPERATE light.

Proposed Answer: B

Explanation (Optional):
B is correct. Required by daily surveillance
A incorrect. The source check does not actually verify alarm setpoints
C incorrect. Credible because applicant may believe that low sample flow could be the cause of the light being off
D incorrect. Credible because applicant may believe that low sample flow could be the cause of the light being off

Technical Reference(s): PT/1/A/4600/003 (Attach if not previously provided)
SF-C12, pg 5
WE-EMF, pg 47

Proposed references to be provided to applicants during examination: None

Learning Objective: None (As available)

Question Source: Bank # _____
Modified Bank # _____ (Note changes or attach parent)
New X

Question History: Last NRC Exam _____

Question Cognitive Level: Memory or Fundamental Knowledge X
Comprehension or Analysis _____

10 CFR Part 55 Content: 55.41 10
55.43 _____

Comments:

N-16 has a short decay half life. As a result, the transport time of the N-16 in the main steam will have an effect upon the gallons per day leak calculation. Selecting 1 (SOURCE OF LEAK) will provide the choice of three assumed steam generator leak locations to be used in calculations and will be displayed on the main meter screen. Each location uses a different set of equations to convert between counts/ minute and gallons per day. To select, press 1 (TUBE SHEET), 2 (CENTER OF HOT LEG), or 3 (U- BEND).

Reactor power also enters into the leak rate calculation. Selection 2 (RX POWER) allows reactor power to be entered. The monitor receives automatic updates of thermal power best estimate from the OAC. The reactor power range is 40 to 100% power. At higher power, steam flow is greater, resulting in faster transit time. Below 40% power, the transport time is so long that the majority of the N-16 has decayed during transport.

At power levels below 40% reactor power, the module will remain at 40%. For power changes below 40%, the normal alarm setpoints are elevated from the typical values of 5 GPD Trip 2. The basis for this is to preclude nuisance alarms. At 100% power an increase of 100 CPM above established background values are required to actuate the alarm. With reactor power at or less than 40%, the leakage algorithm requires only a 10 CPM change to actuate the 5 GPD alarm. Since radiation is a random event, the detector response varies within a typical Poisson distribution. The typical background count is 40 CPM. The standard deviation for a background count of 40 CPM is only 6 counts. Within just 2 standard deviations, the 10 CPM spike would be reached from time to time and actuate the 5 GPD alarm. Therefore, the alarm is raised at low power levels to preclude these nuisance alarms.

The range of the instrument is 0.1 to 10^5 CPM or 1 to 10^5 GPD. No control functions are associated with these EMF's.

Channel Type: Gamma Scintillation Detector.

2.3 Detector Functional Description

Objective #6

2.3.1 Dual Range Gamma Liquid Detector Assembly

The dual range gamma liquid detector assembly is used for channels 1EMF34, 2EMF34, 1EMF44, 2EMF44, 1EMF45A, 1EMF45B, 2EMF45A, 2EMF45B, and 0EMF49 to monitor process liquid activity (refer to Drawing 7.5). **The liquid flows through a 6.2 liter sample volume. Two detectors, a gamma scintillation detector (NaI) and a Geiger-Mueller detector, are inserted into the sample volume. The gamma scintillation detector (NaI) is used to measure low-range gross gamma radiation. Its signal goes to an RP-30A readout module in the control console. Lead shielding permits the required sensitivity in a 5 mr/hr background field. A 100uCi Cs-137 check-source, controlled from the RP-30A readout module, provides a functional check of the channel. The Geiger-Mueller detector measures high range radiation. Its signal goes to an RP-1A readout module. Approximately one decade of range overlap is provided between low and high ranges.**

C. Continue walkthrough of the following sections of the Training Manual:

2.4.3 Chksource

2.4.4 Show Data *

* NOTE: Point out to the students that some of the displays depicted in the Training Manual in section 2.4.4 don't match up with the actual displays on the RP-86A Modules. However, the differences are minor and do not prohibit operator understanding of the various displays and function keys.

2.4.5 Counter

2.4.6 Analyze

2.4.7 Tbl byp *

* NOTE: The Trouble Bypass function will not be available unless there is a malfunction. Demonstrate operation of this function in the Abnormal Operation section of this guide

D. Point out that section 2.5 of the Training Manual (Calibration Functions) is performed by IAE personnel. This function is not available on the simulator.

E. The remainder of the Training Manual (sections 2.6 and 2.7) covers operations of the N-16 monitors (EMF-71, 72, 73, 74). Return to section 2.6 when the N-16 monitors are discussed later in this lesson.

3.1.2 Area Radiation Monitors

INSTRUCTOR

A. Point out 1EMF-1 thru 1EMF-17 including the module controls and associated annunciators.

- **Question**: What type of detectors do 1EMF-1 through 1EMF-17 utilize?

  Answer: Geiger-Mueller detector

- **Question**: Are there any control actions associated with 1EMF-1 through 1EMF-17?

  Answer: Only 1EMF-16. On a Trip II it will actuate a containment evacuation alarm. (If they don't mention the Source Range interlock, ask the next question.)

- **Question**: If 1EMF-16 were to have a Trip II alarm under the current conditions, would a containment evacuation alarm occur?

  Answer: No, the containment evacuation alarm is blocked when both Source Range Nuclear Instruments high flux trips are blocked.

NOTE:

1. **WHEN** greater than or equal to 15% RTP:

   - First surveillance is required within 12 hours after reaching 15% RTP.
   - For subsequent surveillances, if PR NIS channel absolute difference is greater than 2% RTP during stable conditions, 4 hours is allowed to adjust PR NIS channels to ±2% of heat balance calculation.
   - **IF** adjustment **CANNOT** be made within time allowed, PR NIS channel shall be declared inoperable.

2. OAC Graphics Vent Menu provides Upper/Lower Containment average temperature readings:

   - Upper and Lower Compartment lower limit may be reduced to 60°F in Modes 2 – 4.
   - Lower Compartment upper limit may be between 120 – 125°F for up to 90 cumulative days per calendar year provided the Lower Compartment temperature averaged over the previous 365 days is less than 120°F. Within this 90 cumulative day period, lower compartment temperature may be between 125 – 135°F for 72 cumulative hours. See OAC point M1P1544 (U1 Avg Lower Cont Temp - Previous 365 Days).
   - Upper Compartment average air temperature shall be computed using only those temperature points corresponding to AHUs with operable sensors (using Average Temperature on OAC Graphic), regardless of whether AHU is running or **NOT** (based on large Air Volume mass) in upper containment) {PIP 0 M00-0552}
   - Lower Compartment average air temperature shall be computed using only those temperature points corresponding to running AHUs with operable sensors (using Weighted Average Temperature on OAC Graphic) {PIP 0 M00-0552}

3. Tech Spec limit for SNSWP temperature is 82°F. Due to process instrument loop inaccuracy, if indicated SNSWP temperature is 78°F or greater, instruct Work Control to activate Model Work Order #94002898 for manual determination of SNSWP temperature. Temperature is checked year round as a conservative decision. {PIP 0-M93-1221}

4. **IF** operate light dark a source check must be performed on EMF.

5. **IF** Loss of Sample Flow Alarm is lit, place sample pump in operation to clear alarm.

6. **IF** system is **NOT** in operation, Loss of Sample Flow Alarm is invalid.

7. **IF** 1EMF-36 is operable, the following EMFs should be operable but are **NOT** required: 0EMF-41, 1EMF-42, 0EMF-50 and 1EMF-39 (for Cont. Air Addition and Release only). **IF** 1EMF-36 is inoperable, the following EMFs shall be operable: 0EMF-41, 1EMF-42, 0EMF-50 (with WG System release isolation valve open), and 1EMF-39 (for Cont. Air Addition and Release only with VQ System release isolation valve open).

Unit 1

Examination Outline Cross-reference:	Level	RO	SRO
	Tier #	2	
	Group #	1	
	K/A #	076 A1.02	
	Importance Rating	2.6	

Ability to predict and/or monitor changes in parameters (to prevent exceeding design limits) associated with operating the SWS controls including: Reactor and turbine building closed cooling water temperatures.

Proposed Question: Common 26

Unit 1 is operating at 100% power.
An inadvertent S_p signal is generated during IAE testing.

Which ONE (1) of the following describes the components that will increase in temperature prior to action taken by the crew?

A. ND AHUs discharge

B. VL AHUs discharge

C. NC Pump Motors

D. Letdown Heat Exchanger

Proposed Answer: C

Explanation (Optional):
C is correct. KC supplies the NC Pump motors, and a phase B (SP) signal will cause KC to isolate in containment (Non Essential header)
A incorrect. ND AHUs are supplied from Essential header
B incorrect. RN supplies cooling to VL AHUs
D incorrect. Supplied from Non-Essential header, but not in containment. Distractors are credible because applicant may misunderstand system relationship and alignments

Technical Reference(s): ECC-ISE, pg 13 (Attach if not previously provided)
PSS-RN, 33

Proposed references to be provided to applicants during examination: None

Learning Objective: PSS-RN, obj 10 (As available)

Question Source: Bank # _____
Modified Bank # _____ (Note changes or attach parent)
New X

Question History: Last NRC Exam _____

Question Cognitive Level: Memory or Fundamental Knowledge _____
Comprehension or Analysis X

10 CFR Part 55 Content: 55.41 7
55.43 _____

Comments:

OBJECTIVES

	OBJECTIVE	NLO	NLOR	LPRO	LPSO	LOR
8	Describe the RN System Flow path (suction source, essential and non-essential header alignment and discharge point) for the following:					
	• Normal operation	X	X	X	X	
	• Operation following a Blackout	X	X	X	X	X
	• Operation following a Safety Injection	X	X	X	X	X
9	Explain the reason for taking a suction on the low level intake.	X	X	X	X	
10	Concerning the RN essential and non-essential headers:					
	• List the loads supplied by each header	X	X	X	X	
	• Identify which loads are automatically supplied on a Blackout, Safety injection and/or Phase B.	X	X	X	X	X
11	Explain the reason for **NOT** isolating the auxiliary building non-essential header on a Blackout signal.	X	X	X	X	X
12	Describe the operation including any interlocks for the following valves:	X	X	X	X	X
	• RN42A (AB Non Ess Supply Isol)					
	• RN-70A (171B) (A(B) D/G Supply Isol)					
	• 1RN1 (Low Level Intake Isolation)					
	• Engineering Safeguards Modulating Control Valves and Reset Circuitry					
13	Describe the operational concerns when cycling RN valves that are shared between Unit 1 and Unit 2.			X	X	X
14	Given a parameter associated with the RN system, describe the indications for that parameter.	X	X	X	X	
15	Given a Limit and Precaution associated with the RN System, discuss its basis and when it applies.	X	X	X	X	X

4) Supplies assured makeup for the following systems:

- Auxiliary Feedwater (CA)
- Component Cooling (KC)
- Spent Fuel Pool Cooling (KF)
- Diesel Generator Cooling (KD)

The RN return from the NS heat exchangers is monitored for radioactivity by EMF-45A & B to detect tube leakage. The NS heat exchangers have a wet lay-up loop associated with the shellside (RN) of the heat exchanger **(Refer to Drawing 7.7)**. This wet lay-up loop was added to help reduce corrosion buildup on the shellside of the HX. The 2B NS heat exchanger wet lay up loop is on the tube (RN) side of the heat exchanger. This system is non-safety related and in case of a break in the system there are flow limiting orifices on the suction and discharge sides. This system is primarily the responsibility of the Chemistry Dept. with the exception of the isolation valves directly off the RN piping which will be Operations. The wet lay up system will normally be in service with the isolation valves open and the heat exchanger water solid. The recirc. pump will be run for sampling purposes and chemical additions as necessary.

The RN **Reactor Building non-essential header** is not redundant and is isolated on an S_P (Phase B) signal, when it is being supplied from the 'A' RN header. If 'B' train is supplying the header, flow will be lost to the NCP coolers on a BO or SS. This header contains the NCP motor coolers **(Refer to Drawing 7.6)**. Loss of RN to the NCP motor cooler(s) requires the operator to trip the effected NCP(s).

Objective # 11

The RN **Auxiliary Building non-essential header** is not redundant and is isolated on an S_S signal. The components supplied by this header are: **(refer to Drawing 7.6)**

- Reciprocating Charging Pump Bearing oil cooler
- Reciprocating Charging Pump Fluid Drive oil cooler

Note: The Steam Generator Blowdown Heat Exchanger has been flanged out and "abandoned in place" for Unit #1 (NSM 12430) and Unit #2 (NSM 22430).

Due to both units alignment to the RL Header, a cross-tie is created between the units through a 6 inch line. **(Refer to drawing 7.4)**

The reason that the Auxiliary Building non-essential header supply isolation valve (RN42) is **NOT** closed during a Blackout is to allow "A" RN pump supply the Reactor Building ventilation units **(refer to Drawing 7.11)**. The "A" RN pump will have a greater NPSH since it will be supplied by the LLI . Also it is likely under Blackout conditions the RV pumps will not have power.

Due to fouling problems and repeated maintenance on the PD pump heat exchanger a decision was made to isolate the Aux. Bldg. non-essential header. As a result the normal position of 1RN-64 will be closed. When it is necessary to start/stop the PD pump 1RN -64 will be opened/closed per the NV procedure.

Objective # 13

Phase "B" Containment Isolation is actuated by:

Hi Hi Containment Pressure	**> 3.0 psig on $^2/_4$ channels**
Manually	**$^1/_2$ pushbuttons**

Phase B actuation secures Component Cooling Water (KC) to the Reactor Coolant pumps, Nuclear Service Water (RN) to the Reactor Coolant Pump Motor Coolers, Containment Ventilation Cooling Water (RV) and Instrument Air (VI) to the containment.

Phase "B" can be reset with signal still present, once resets are pushed, we regain control of valves that close on the Phase "B" signal.

Containment Ventilation Isolation (S_H) is initiated by any of the following:

- **Safety Injection (S_S)**
- **Manual Phase "A" (S_t)**
- **Manual NS/Phase "B"**
- **Trip 2 alarm on EMF-38, 39, or 40**

Containment Ventilation Isolation (S_H) signal secures VQ and VP.

To "Reset" Containment Ventilation Isolation following a Safety Injection, Manual Phase "A", or Manual Phase "B", the Containment Ventilation (S_H) "Reset" Pushbuttons must be depressed (can reset without resetting the initiating signal).

To "Reset" Containment Ventilation following an EMF 38, 39, 40 Trip II, the EMF must be reset, then the Containment Ventilation "Reset Pushbuttons must be depressed.

NOTE: Resetting the S_H signal will allow manual control of VQ valves. VQ valves do not have an auto function.

Annulus Ventilation System (VE) start maintains negative pressure in annulus. It is actuated automatically by a Hi Hi Containment pressure signal or manually by either depressing Manual "NS/Phase B" Pushbutton or placing VE (Annulus Ventilation) to "ON".

To reset the start signal we must reset the Phase "B" isolation, then, place VE (Annulus Ventilation) fan switch to "Reset" and place back in "auto".

H_2 Skimmer and Air Return Fan (VX) starts on a Hi Hi Containment Pressure (S_p) with CPCS or Manually by NS/Phase B pushbutton and CPCS after a 10 minute time delay.

Examination Outline Cross-reference:	Level	RO	SRO
	Tier #	2	
	Group #	1	
	K/A #	078 G2.1.32	
	Importance Rating	3.4	

Conduct of Operations: Ability to explain and apply all system limits and precautions.

Proposed Question: Common 27

Unit 1 is in Mode 3.

VI Compressor "D" Pre-Lube pump is running prior to the start of the compressor.

Which ONE (1) of the following describes the status of sealing air to the compressor in the current configuration?

Sealing air should....

A. Be **supplied** to the VI compressor to prevent oil from entering the compressor when started.

B. Be **isolated** from the compressor to prevent oil from entering the compressor when started.

C. Be **supplied** to the VI compressor to reduce the potential for overheating by placing an immediate load on the compressor.

D. Be **isolated** from the compressor to ensure an unloaded start of the air compressor.

Proposed Answer: A

Explanation (Optional):

A is correct. Without sealing air, oil may enter the compressor upon starting

B is incorrect. Opposite effect, but reasonable if applicant is unsure of purpose and location of sealing air

C is incorrect. Reasonable because compressors are not designed to run continuously unloaded.

D is incorrect. Reasonable because this is similar to a precaution for A, B, C compressors for venting air from a receiver with low pressure prior to starting

Technical Reference(s): SS-VI, pg 91 (Attach if not previously provided)

Proposed references to be provided to applicants during examination: None

Learning Objective: SS-VI-14 (As available)

Question Source: Bank # _____
Modified Bank # _____ (Note changes or attach parent)
New X

Question History: Last NRC Exam _____

Question Cognitive Level: Memory or Fundamental Knowledge X
Comprehension or Analysis _____

10 CFR Part 55 Content: 55.41 10
55.43 _____

Comments:

	OBJECTIVE	NLO	NLOR	LPRO	LPSO	LOR
12	Describe the function and operation of the Del-MONOX Purifier Unit; one of the major components within the VB System.	X	X	X	X	
13	Discuss the adverse effect(s), from the following contaminants, on VI System operation: • Water • Particulates • Hydrocarbons	X	X	X	X	
14	Given a limit and/or precaution associated with operation of the Instrument Air System (VI), Station Air System (VS) or the Breathing Air System (VB), discuss it's basis and applicability.	X	X	X	X	X
15	Discuss the operational effect(s) resulting from the failure of any one of the following VI System components: • Compressor • Distribution header or branch line • Air Dryer and/or Filter • Accumulator check valve • Design, installation, and maintenance errors	X	X	X	X	X
16	List three errors, associated with the design, installation, or maintenance of the VI System, which could invalidate the assumption utilized within the Loss of Instrument Air Safety Analysis.	X	X	X	X	X
17	Provide the Immediate Action(s) associated with the alarm response to any of the following Control Board Annunciators: • VI Compressor Panel Trouble (AD12 A-1) • Breathing Air Low Pressure (AD12 B-1) • VI / VS Low Pressure (AD12 C-1) • VI / VS Low-Low Pressure (AD12 D-1) • VI Dryers Panel Trouble (AD12 E-1)			X	X	X
18	Describe how manual closure of the Main Steam Isolation Valves is accomplished, in accordance with Loss of Control Room (AP/1or 2/A/5500/17) and Uncontrolled Depressurization of All Steam Generators (EP/1or 2/A/5000/ECA-2.1).	X	X	X	X	X

Objective # 14

1.3.1.1 Limits and Precautions

OP/0/A/6450/05, Instrument Air System

Operation of VI Compressors A – F without cooling water is prohibited.

Basis: Cooling water flow is necessary to prevent compressor damage caused by excessive temperatures.

Prior to starting A, B, or C VI Compressor with VI receiver pressure 0 - 35 psig, VI receiver pressure should be bled to 0 psig.

Basis: This will insure an "unloaded" startup of A, B, or C Compressor; the VI System will be depressurized and the air-operated unloading valves, which receive their air supply from the VI Receivers, will be open.

Isolating Air to Compressors D, E, or F while Compressor or Pre-Lube Oil Pump is running is prohibited.

Basis: The sealing air prevents oil migration from the compressor bearings from entering the compressor internals. Oil entering the compressor internals will cause extensive damage because the compressors are not designed to compress liquids.

Maximum VI Air Dryer D/P is 12 PSID.

Basis: This is to insure sufficient airflow through each individual Air Dryer to allow proper drying. This also insures that the Dryer Pre and Post filters are operating properly and no excessive pressure drops are occurring across the filters.

Maximum VI Air Dryer Pre-filter D/P is 10 psid.

Basis: This is to insure that the Dryer Pre-filters are operating properly and no excessive pressure drops are occurring across the filters.

Maximum VI Air Dryer After-Filter D/P is 10 psid.

Basis: This is to insure that the Dryer Post-filters are operating properly and no excessive pressure drops are occurring across the filters.

Maximum VI Air Dryer Bypass Filter D/P is 10 psid.

Basis: This is to insure that the Dryer bypass filter is operating properly and no excessive pressure drops are occurring across the filter.

Maximum VI Dryer dewpoint is 0°F.

Basis: This is to insure that there is no excessive moisture buildup in the VI System.

Maintaining desiccant VI Dryer valved in for more than 1 hour with Control Power De-energized may saturate desiccant bed.

Basis: Self-Explanatory

Examination Outline Cross-reference:	Level	RO	SRO
	Tier #	2	
	Group #	1	
	K/A #	103 A3.01	
	Importance Rating	2.9	

Ability to monitor automatic operation of the containment system, including: Containment isolation

Proposed Question: Common 28

A reactor trip and safety injection has occurred.

The following conditions currently exist:

- • NC pressure is 1700 psig.
- • Tavg is 548°F.
- • Containment pressure is 2.9 psig on 2 channels, 3.1 psig on 2 channels.
- • SG pressures are 1000 psia.
- • SG levels are 5% NR and slowly rising.

Which ONE (1) of the following ESF actuations has/have occurred?

A. Phase A only

B. Main Steam Line Isolation only

C. Phase A and Phase B only

D. Phase A, Phase B, and Main Steam Line Isolation

Proposed Answer: D

Explanation (Optional):

D is correct because Containment pressure is greater than 3 psig on 2 of 4 channels, causing a P signal and MSLI.

A is incorrect but CIA actuates on any SI signal. If applicant misinterprets pressure and logic, this answer would be chosen.

B is incorrect because CIA and CIB are also actuated at this pressure. Reasonable because MSLI does have a containment pressure setpoint

C is incorrect because MSLI actuates also. Reasonable because applicant may discount the containment pressure isolation for MSLI, only considering steam parameters

Technical Reference(s): ECC-ISE, pg 51, 53, 55, 57, 61, 63, 65, 67 (Attach if not previously provided)

Proposed references to be provided to applicants during examination: None

Learning Objective: ECC-ISE Obj 5 (As available)

Question Source: Bank # X
Modified Bank # _____ (Note changes or attach parent)
New _____

Question History: Last NRC Exam BVPS 2005

Question Cognitive Level: Memory or Fundamental Knowledge _____
Comprehension or Analysis X

10 CFR Part 55 Content: 55.41 7
55.43 _____

Comments:

CLASSROOM TIME (Hours)

NLO	NLOR	LPRO	LPSO	LOR
2.5	1.5	1.5	1.5	1.5

OBJECTIVES

	OBJECTIVE	NLO	NLOR	LPRO	LPSO	LOR
1	State the purpose of the Engineered Safeguards System.	X	X	X	X	
2	Explain the need and reasoning behind the redundancy requirements for two trains of safety related systems.	X	X	X	X	
3	State how the operator would be aware if more than one protection cabinet door was opened simultaneously.			X	X	X
4	Define the following terms: S_s, S_t, S_P, S_H	X	X	X	X	
5	List the conditions that will initiate the following: • Safety Injection (S_s) • Phase "A" Isolation (S_t) • Containment Spray/Phase "B" Isolation (S_P) • Containment Ventilation Isolation (S_H) • Main Steam Isolation (MSI) • Main Feedwater Isolation (FWI) • VE (Annulus Ventilation) System Start • H_2 Skimmer and Air Return Fan Start (VX)	X	X			
6	List all Safety Injection (S_s) actuation signals, setpoints, logic, and the type of accident each signal provides protection for.	X	X	X	X	X
7	List the pumps that automatically start following a safety injection actuation.	X	X	X	X	X
8	State which Safety Injection (S_s) signal can be blocked.	X	X	X	X	X
9	Explain the reason for blocking a Safety Injection (S_s) signal.	X	X	X	X	X
10	List the interlock and parameter setpoint that allows blocking Safety Injection (S_s).	X	X	X	X	X
11	Describe the operator action needed to block Safety Injection.			X	X	X
12	List the conditions that allow RESET of Safety Injection.			X	X	X

7.3 Containment Isolation Signals (1/27/98)

PHASE "A" ISOLATION

ANY SAFETY INJECTION SIGNAL
OR
MANUAL

PHASE "B" ISOLATION

HI HI CONTAINMENT PRESSURE > 3.0 PSIG ON 2/4 CHANNELS
OR
MANUAL

CONTAINMENT VENTILATION ISOLATION

ANY SAFETY INJECTION SIGNAL
Or
MANUAL PHASE "A" ISOLATION
Or
MANUAL PHASE "B" ISOLATION
or
EMF 38, 39 OR 40

7.4 Safety Injection Signals (10/5/99)

SIGNAL	SETPOINT	COINCIDENCE	PERMISSIVE	PROTECTION
MANUAL	PUSHBUTTON DEPRESSED	½ PUSHBUTTONS	----	OPERATOR DISCRETION
LOW PRESSURIZER PRESSURE	1845 PSIG	2/4 CHANNELS	P-11	LOCA
HI CONTAINMENT PRESSURE	1.0 PSIG	2/3 CHANNELS	----	LOCA, STEAM BREAK

7.5 Safety Injection Logic (10/5/99)

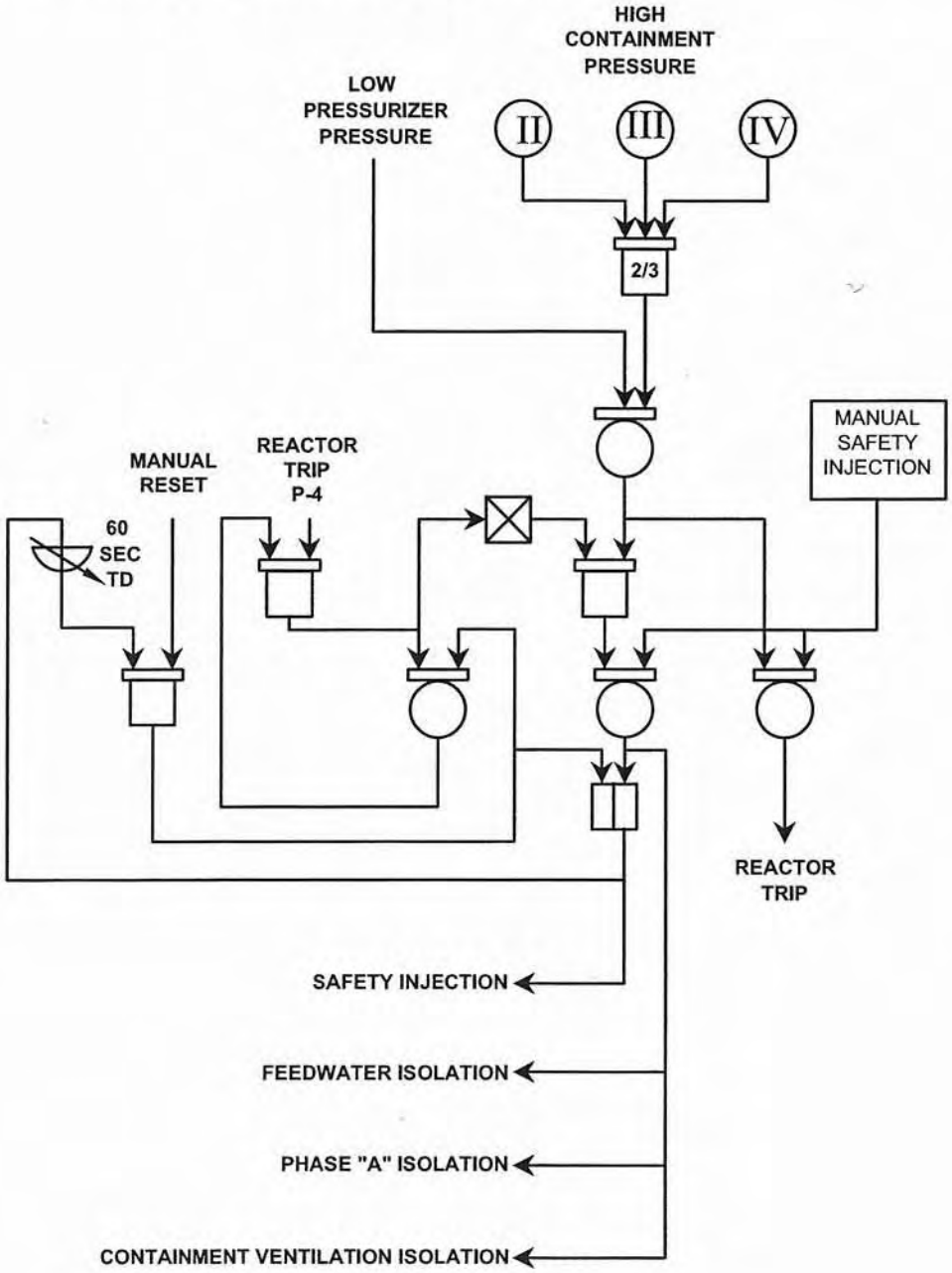

7.6 Main Steam Pressure Logic (10/5/99)

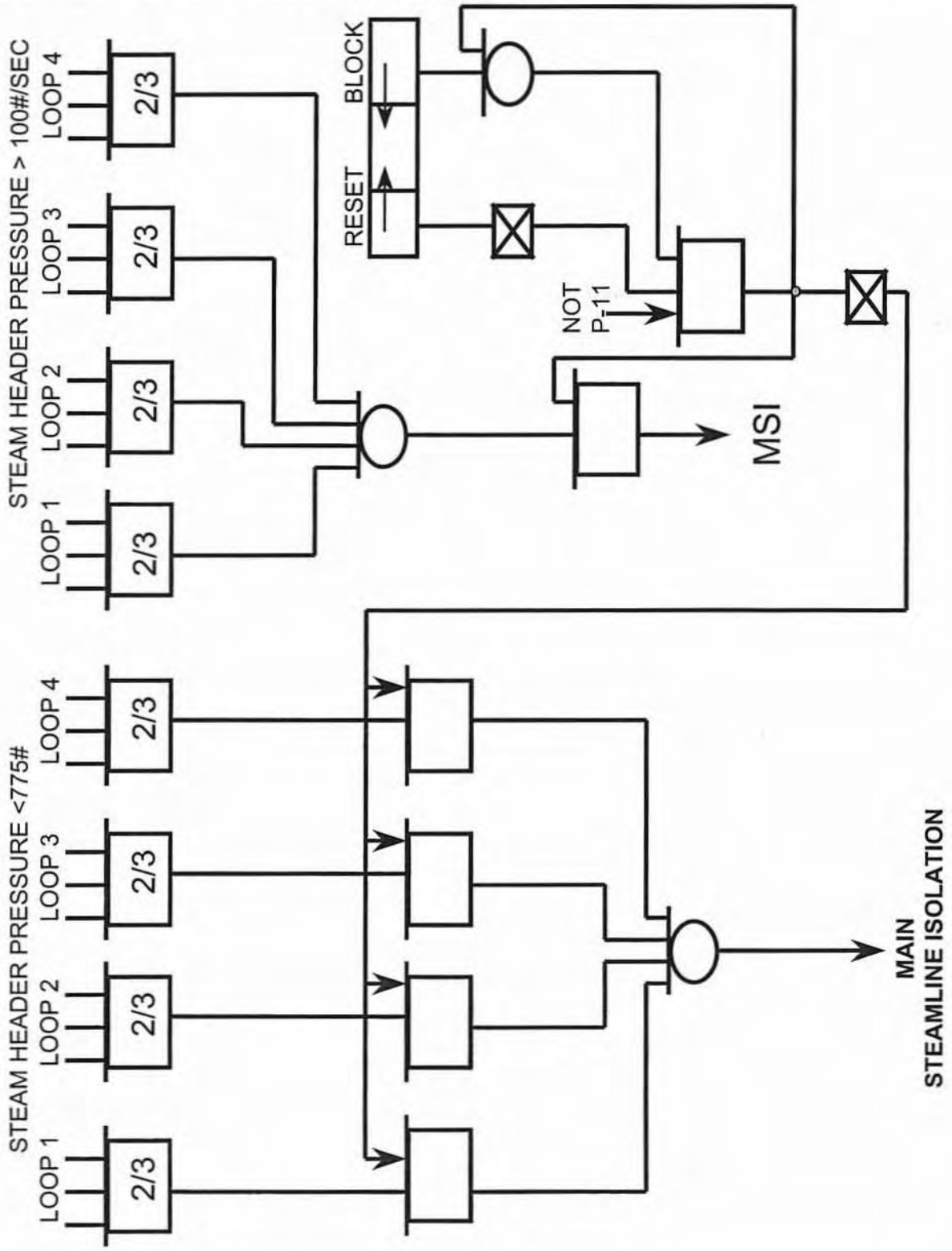

7.7 Pressurizer Pressure Logic (8/29/00)

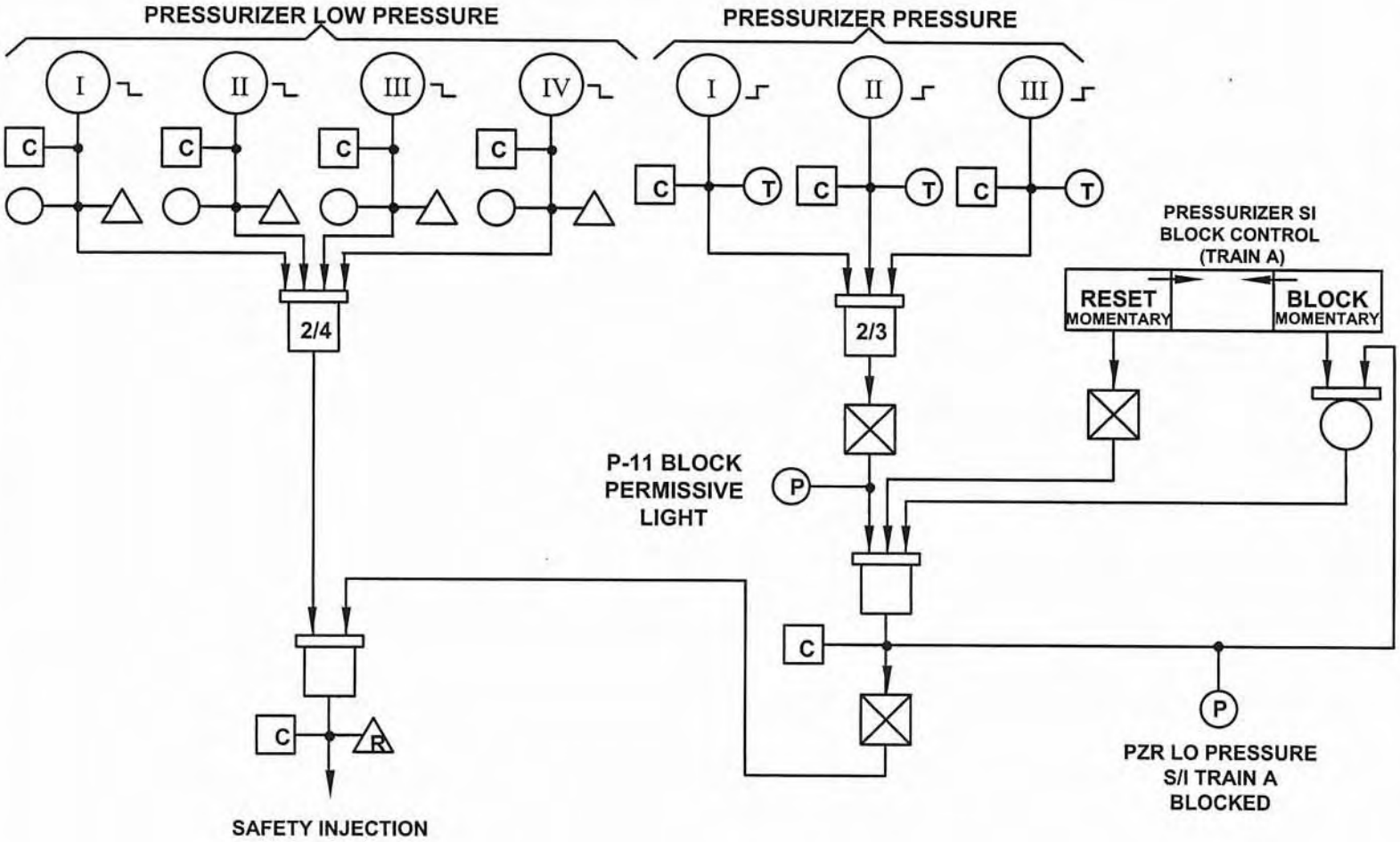

7.8 Containment Spray Signals (8/20/97)

AUTOMATIC ACTUATION

HI HI CONTAINMENT PRESSURE > 3.0 PSIG

AND

CPCS SIGNAL ≥ 0.35 PSIG

MANUAL ACTUATION

CONTAINMENT SPRAY/PHASE B PUSHBUTTON DEPRESSED

AND

CPCS SIGNAL ≥ 0.35 PSIG

7.9 Hi Hi Containment Pressure Logic (8/20/97)

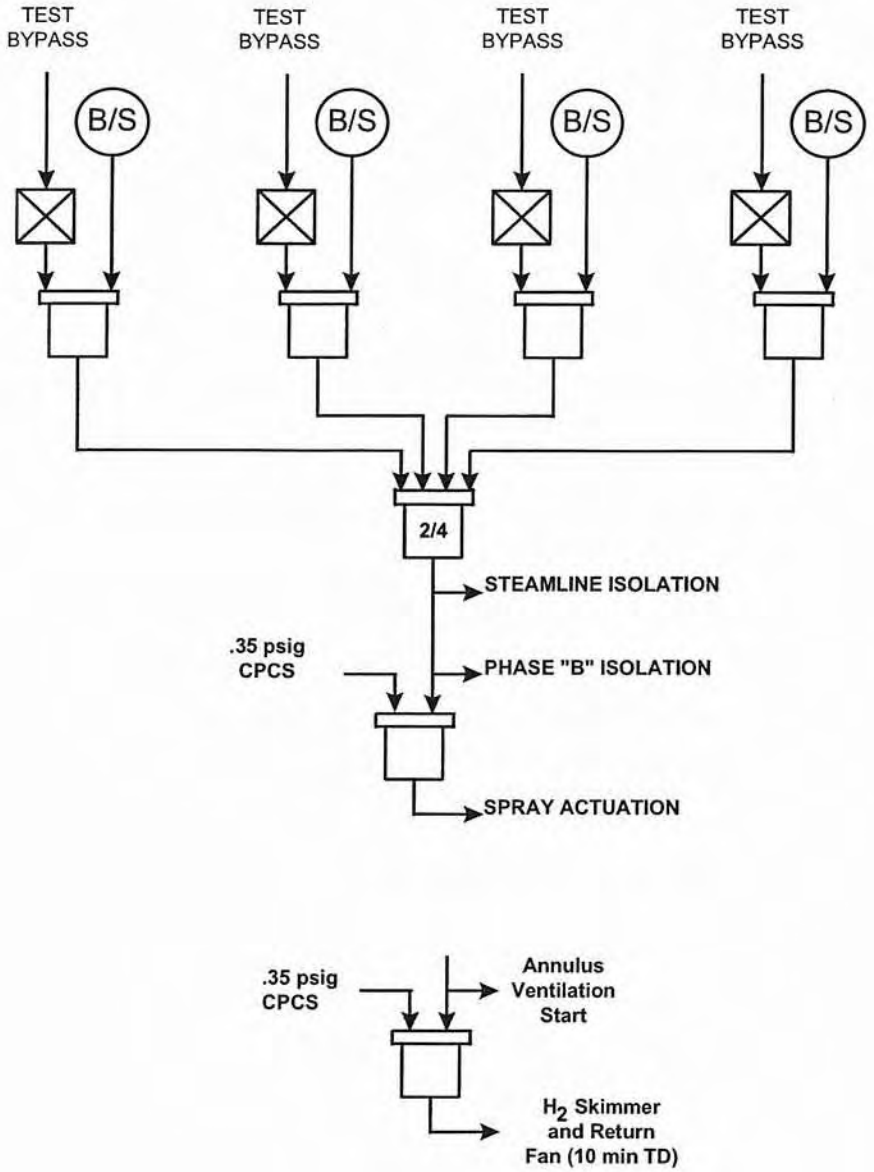

7.10 Main Steam Isolation Signals (8/20/97)

SIGNAL	SETPOINT	COINCIDENCE	PERMISSIVE
MANUAL	PUSHBUTTON DEPRESSED	½ PUSHBUTTONS	----
HI HI CONTAINMENT PRESSURE	> 3.0 PSIG	$^{2}/_{4}$ CHANNELS	----
LOW STEAM PRESSURE	775 PSIG	$^{2}/_{3}$ CHANNELS ON ¼ STEAMLINES	P-11
HIGH STEAMLINE PRESSURE RATE OF DECREASE	100 PSIG/SEC	$^{2}/_{3}$ CHANNELS ON ¼ STEAMLINES	P-11

7.11 Main Steam Isolation Logic (8/29/00)

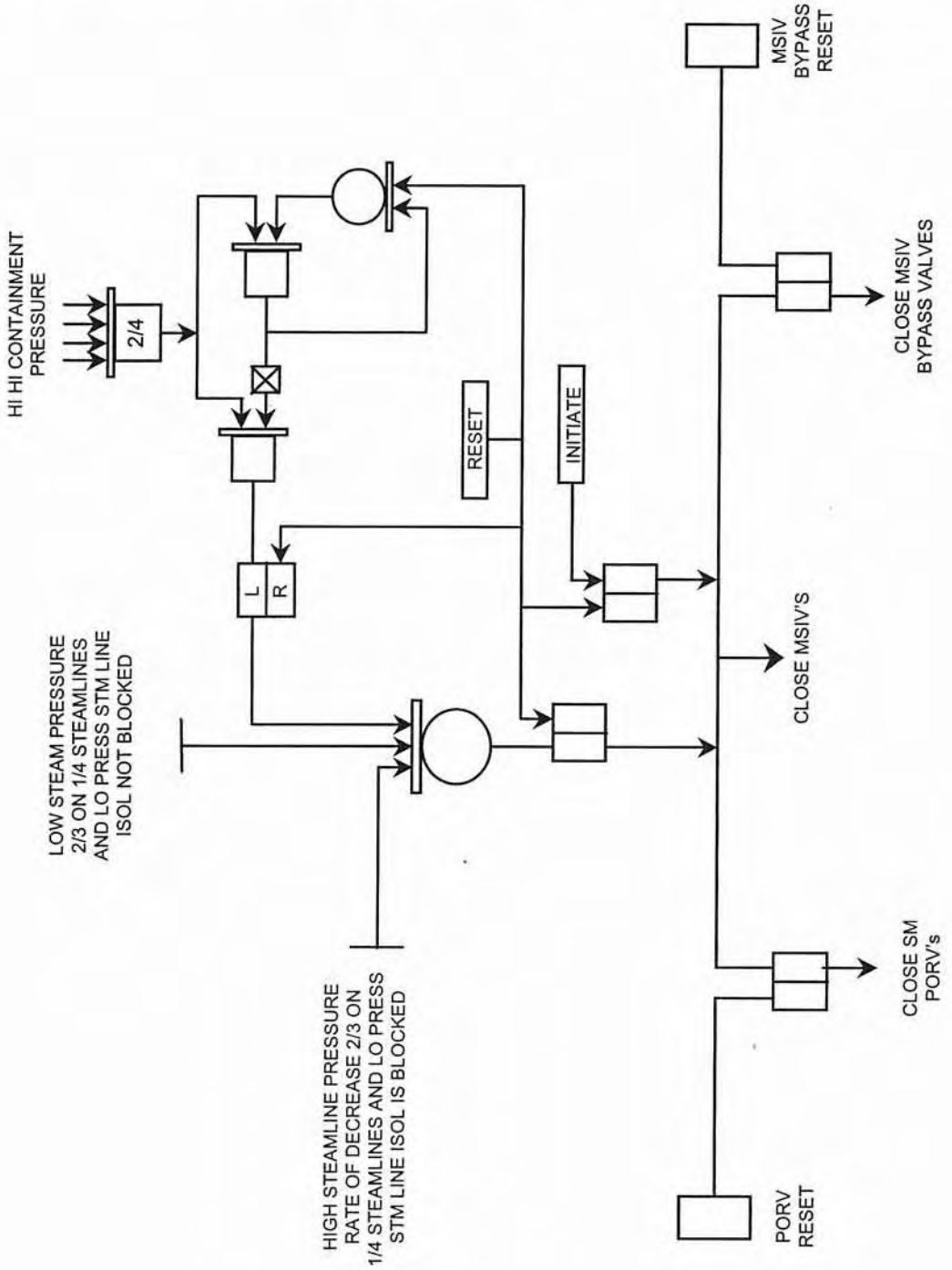

Examination Outline Cross-reference:	Level	RO	SRO
	Tier #	2	
	Group #	2	
	K/A #	002 K6.07	
	Importance Rating	2.5	

Knowledge of the effect or a loss or malfunction on the following RCS components: Pumps

Proposed Question: Common 29

While at 8% power with a power ascension in progress, NC Pump 2C trips on overcurrent.
No operator action has been taken and no rod motion has occurred.

Which ONE (1) of the following describes the reactor and NCS loop C response?

A. A reactor trip WILL occur and indicated Loop C Tavg will INCREASE.

B. A reactor trip WILL occur and indicated Loop C Tavg will DECREASE.

C. A reactor trip WILL NOT occur and indicated Loop C Tavg will INCREASE.

D. A reactor trip WILL NOT occur and indicated Loop C Tavg will DECREASE.

Proposed Answer: D

Explanation (Optional):
A and B are incorrect because a reactor trip will not occur below P-7 (10% power)
C is incorrect because Thot will lower to Tcold when pump heat input is no longer a factor in that loop (Reverse flow with no NC Pump operating)
D is correct. Distractors are credible because applicant must understand the protective interlocks associated with NC Pump trip as well as system response to a trip. Common misconception about behavior of Thot and Tcold on a NC Pump trip

Technical Reference(s): IC-IPE, pg 47 (Attach if not previously provided)
PS-NC pg 17

Proposed references to be provided to applicants during examination: None

Learning Objective: IC-IPE Objective 10, (As available)
PS-NC Obj 2

Question Source:	Bank #	X	
	Modified Bank #		(Note changes or attach parent)
	New		
Question History:	Last NRC Exam	VC Summer 2006 Retake	
Question Cognitive Level:	Memory or Fundamental Knowledge		
	Comprehension or Analysis		X
10 CFR Part 55 Content:	55.41	4	
	55.43		

Comments:

SEQ	OBJECTIVE	NLO	NLOR	LPRO	LPSO	LOR
8	Describe the function of the First-Out annunciator panel. ICIPE008			X	X	
9	Given a Limit and/or Precaution associated with an operating procedure, discuss its basis and applicability. ICIPE009		X	X	X	X
10	List all the Reactor Trip Signals including the setpoints, logic permissives and bases/protection afforded by each. ICIPE010		X	X	X	X
11	List all the protective system permissive ("P" signal) interlocks to include input parameter(s), logic and function. For interlocks which provide Trip block, state the Trips affected and whether Auto or Manual block. ICIPE011			X	X	X
12	List all the protection system control ("C" signal) interlocks including logic and functions. ICIPE012			X	X	X
13	Briefly describe the incident that occurred at Salem Nuclear Plant and how this event affected McGuire Reactor Trip Breaker operation. ICIPE013			X	X	X

CLASSROOM TIME (Hours)

NLO	NLOR	LPRO	LPSO	LOR
3	4	5	5	3

OBJECTIVES

	OBJECTIVE	NLO	NLOR	LPRO	LPSO	LOR
1	State the purpose of the Reactor Coolant System.	X	X	X	X	
2	Describe the flow path in the Reactor Coolant System with all NC Pumps running and with less than all pumps running.		X	X	X	
3	Describe the indications which would be used to detect a reactor vessel head O-ring leak and how this line can be isolated.		X	X	X	X
4	Concerning the manual and remote reactor vessel head vents:					
	• state their purpose including when each would be used		X	X	X	
	• state how the vents are operated		X	X	X	X
5	Sketch the Reactor Coolant System and include all penetrations and instrumentation associated with system operation and control per Drawing 7.5.	X	X	X	X	
6	State the purpose of the pressurizer.	X	X	X	X	
7	Describe how the inherent characteristics of the pressurizer reduces the effects of pressure transients.	X	X	X	X	
8	Explain why the surge line is connected to the NC hot leg and why the spray line is connected to the NC cold leg.	X	X	X	X	
9	State the purpose of maintaining a constant spray flow to the pressurizer.	X	X	X	X	
10	State how Pzr spray flow will be effected if only A or B NCP is operating.	X	X	X	X	
11	State the purpose of providing the capability of auxiliary spray flow to the pressurizer.	X	X	X	X	

Objective # 10

NC Pump Bus Under Frequency (2/4 busses = 56 Hz) - this anticipatory loss of coolant flow trip protects against DNB. The trip also trips open all four NC pump breakers to prevent electrical braking of the pump motors during frequency decay. A reduction in pump speed would reduce fly wheel inertia and pump coast down flow capability. This "at-power" trip protection is auto-blocked < 10% power (P-7) and is automatically reinstated > P-7.

SG Lo-Lo Level (2/4 channels on 1/4 SGs = 17%) - protects against a loss of heat sink. This protection also causes an auto-start of the CA motor driven pumps (2/4 channels on 1/4 SGs) and the CA turbine driven Pump (2/4 channels on 2/4 SGs).

Single Loop Loss of Flow (2/3 channels in 1/4 loops = 88%) - protects against DNB. This protection is auto-blocked < 48% (P-8) and automatically reinstated > P-8.

Two Loop Loss of Flow (2/3 channels in 2/4 loops = 88%) - protects against DNB. This protection is auto-blocked < 10% (P-7) and automatically reinstated > P-7.

Safety Injection (any SI signal 1/2 Trains) - initiates a reactor trip during LOCA events.

Turbine Trip (2/3 channels ASO < 45psig, 4/4 stop valves closed) - protects against loss of integrity by preventing Pressurizer PORVs from opening on turbine trip at high power.

Objective # 4, 10

General Warning (2/2 Trains) - protects against a loss of both protection trains. Anytime a General Warning is present on both SSPS trains a reactor trip will occur. General Warning is caused by: loose circuit board card; loss of voltage (AC or DC); SSPS train in "Test"; a Reactor Trip By-pass breaker in the Connected position and Closed; a Logic Ground Return fuse blown.

3.1.3 Protection Permissive Interlocks

Objective # 11

P-4 (Reactor Trip Breaker and Bypass Breaker Open for a given train) - initiates: Turbine Trip; Feedwater Isolation (coincident with low Tavg of 553 °F); Allows reset of SI signal after one minute time-out; Inputs to Steam Dump Control System for plant trip mode.

P-6 (1/2 IR instruments > 10^{-10} amps) - allows Manual Block of SR reactor trip. On a power reduction, provides automatic reinstatement of SR high voltage and SR reactor trip when 2/2 IR channels < 10^{-10} amps.

P-7 (2/4 PR instruments > 10% or 1/2 Turbine Impulse Pressures > 10%) - Enables (unblocks) the "at power" reactor trips: Pzr Hi-Level, Pzr Lo-Pressure, 2 Loop Loss of Flow, NCP UV, and NCP UF. The above trips are automatically blocked when below P-7, 3/4 PR < 10% and 2/2 Impulse Pressure < 10%.

1.0 INTRODUCTION

1.1 Purpose

Objective # 1

The major function of the Reactor Coolant System (NCS) is to transfer the heat generated in the reactor core to the steam generators from which steam is used to drive the main turbine generator during normal plant operation. The other functions of the NCS are to serve as the primary pressure boundary for containment integrity, remove residual heat from the core during the first stages of plant cooldown, and to aid in reactivity control by the NCS water.

1.2 General Description

The NCS consists of a reactor vessel and four loops each containing a reactor coolant pump (NCP), a steam generator and associated piping and instrumentation (refer to **Drawing 7.1**). The NCS also includes a pressurizer, code safeties and power operated relief valves (PORVs), and a pressurizer relief tank (PRT). The NCS components are primarily located inside containment. The water in the NCS serves as a coolant, a moderator and a solvent for boric acid.

Objective # 2

The flow through the NCS with all NCPs running, starting at the reactor vessel, leaves the outlet nozzles goes to and through the steam generator tubes, through the NCPs, to the vessel inlet nozzles, up through the core past the fuel assemblies and back to the outlet nozzles. During power operation, all NCPs are required to be in operation. In situations where not all NCPs are running, the flow through the loops without NCPs running will be reversed. Since the discharge side of the NCPs will be the highest pressure in the system, the core is provided an additional margin of subcooling by being connected to the discharge of the NCPs. During normal operation, the NCPs circulate borated demineralized water at a high pressure, at a flow rate and temperature consistent with achieving the reactor core thermal-hydraulic performance, through the reactor vessel and each loop. In each loop, the reactor coolant is circulated through the steam generator tubes on the primary side of the steam generator while the feedwater is pumped into the shell (secondary side) of the steam generator. The thermal energy of the primary is transferred across the steam generator tubes into the feedwater causing it to become steam. The NCS is designed so that the primary and secondary fluids do not come in contact with each other. The steam is then used to drive the main turbine.

The NCS pressure is controlled by the pressurizer which utilizes a control system which manipulates heaters, spray valves and relief valves to maintain a constant pressure. In the event that pressure increases too high, pressurizer relief and safety valves will lift when their setpoint is reached and will relieve to the pressurizer relief tank (PRT). The PRT is designed to capture the flow from the relief and safety valves and cool it.

Examination Outline Cross-reference:	Level	RO	SRO
	Tier #	2	
	Group #	2	
	K/A #	015 K5.07	
	Importance Rating	2.7	

Knowledge of the operational implications of the following concepts as they apply to the NIS: Effects of burning on axial flux density

Proposed Question: Common 30

Which ONE (1) of the following describes AFD target at the end of a Fuel Cycle as opposed to the AFD Target at the middle of the Fuel Cycle?

A. Less negative at end of cycle due to Moderator Temperature Coefficient being less negative at the End of the Fuel Cycle.

B. Less negative at end of cycle due to the power shift caused by fuel depletion in the lower part of the core.

C. More negative at end of cycle due to Moderator Temperature Coefficient being more negative at the End of the Fuel Cycle.

D. More negative at end of cycle due to the power shift caused by fuel depletion in the lower part of the core.

Proposed Answer: B

Explanation (Optional):

A is incorrect because MTC has no significant effect on AFD. Applicant could believe that MTC has a negative effect on AFD

B is correct.

C is incorrect because AFD target is less negative at EOL and MTC does not affect AFD target

D is incorrect because target becomes less negative, but reason is correct

Technical Reference(s): CTH-CP Pg 85 (Attach if not previously provided)

Proposed references to be provided to applicants during examination: None

Learning Objective: CTH-CP-16 (As available)

Question Source: Bank # _____
Modified Bank # _____ (Note changes or attach parent)
New X

Question History: Last NRC Exam _____

Question Cognitive Level: Memory or Fundamental Knowledge X
Comprehension or Analysis _____

10 CFR Part 55 Content: 55.41 1
55.43 _____

Comments:

SEQ	OBJECTIVE	NLO	NLOR	LPRO	LPSO	LOR
10	Describe the effect, for each of the following, on core power distribution: • Reflector • Fuel zoning • Burnable poison zoning • Control rod placement • Control rod positioning • Dissolved boron concentration • Power Level • Xenon oscillations • Core age CTHCP010		X	X	X	X
11	Describe how the operator can change the power distribution profile. CTHCP011		X	X	X	X
12	Explain xenon affects on axial distribution, and it's importance during power operation. CTHCP012		X	X	X	X
13	Describe the use of in-core nuclear instrumentation in monitoring core power distribution. CTHCP013		X	X	X	X
14	Describe the use of excore nuclear instrumentation in monitoring core power distribution. CTHCP014		X	X	X	X
15	List the indications available to the operator for monitoring reactor power distribution *(this would include control board and computer indications, annunciator and computer alarms).* CTHCP015		X	X	X	X
16	Discuss how and why "full power" axial flux difference target changes from BOC to EOC. CTHCP016		X	X	X	X
17	Given excore nuclear instrumentation detector currents and the appropriate data sheets calculate AFD and /or QPTR. CTHCP017		X	X	X	X

Objective # 16

Since Axial Flux Difference *(AFD)* is the difference in normalized flux signals between the top and bottom halves of a two section, excore neutron detector, then AFD follows the Axial Power Distribution of the core. Over core life, AFD and Axial Power Distribution naturally shift toward the top of the core and AFD becomes more positive *(less negative).* Therefore, the operating AFD Target Value becomes less negative over core life.

During power operation our Axial Flux Distribution changes over core life. Training Drawing 7.14, Axial Flux Distribution Profile Comparison - BOC vs. EOC, was provided by the McGuire Nuclear Engineering Staff, to demonstrate this change.

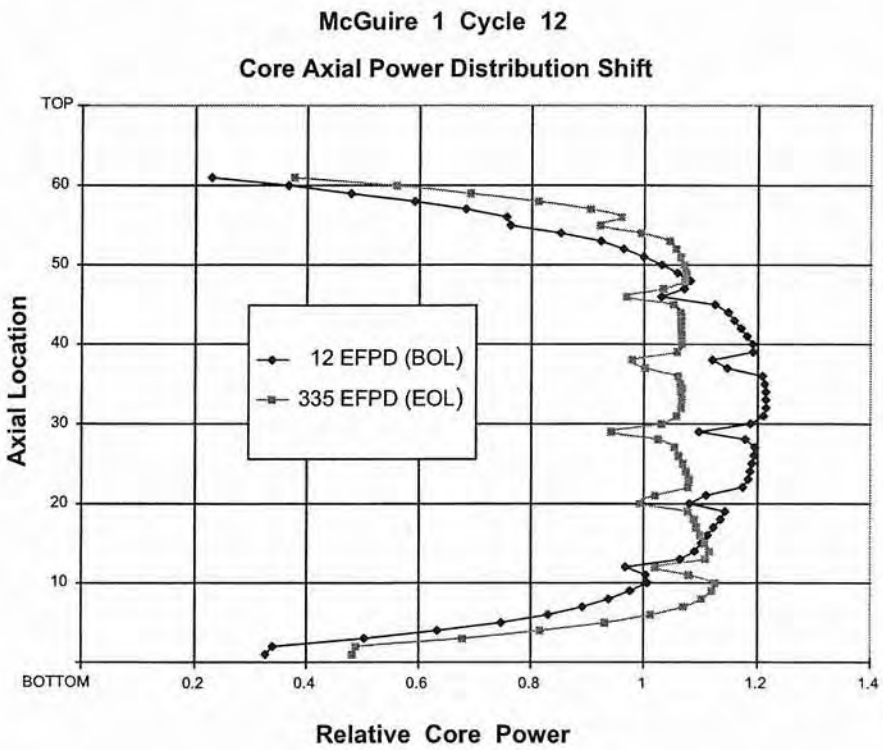

The shift in Axial Power Distribution is primarily attributed to the change in upper core reactivity, over core life:

- **During BOC and MOC conditions, fuel burnup from the lower core area is greater than the fuel burnup from the upper core area.**

Slightly more power is produced from the lower core area. This is due to moderator temperature coefficient and flux redistribution affects skewing axial flux distribution towards the bottom of the core.

- **During EOC conditions, the upper core area is very reactive, due to the lack of fuel burnup in the upper core area compared with the lower core area. Flux naturally shifts towards this reactive fuel area and therefore, axial flux distribution shift towards the top of the core.**

Examination Outline Cross-reference:	Level	RO	SRO
	Tier #	2	
	Group #	2	
	K/A #	027 K1.01	
	Importance Rating	3.4	

Knowledge of the physical connections and/or cause-effect relationships between the CIRS and the following systems: CSS

Proposed Question: Common 31

One of the functions of the Containment Spray System (NS) is to remove fission product iodine from the containment atmosphere during a design basis LOCA.

Which ONE (1) of the following describes how and when this is accomplished?

A. During the Injection phase by providing a spray of cold and subcooled borated water from the FWST into the upper containment volume.

B. During the Injection phase by providing a spray of water with an alkaline pH from the containment sump into the upper containment volume.

C. During the Recirculation phase by providing a spray of cold and subcooled borated water from the FWST into the upper containment volume.

D. During the Recirculation phase by providing a spray of water with an alkaline pH from the containment sump into the upper containment volume.

Proposed Answer: D

Explanation (Optional):

D is correct. Recirc phase is pumping treated water to the spray header to assist in iodine removal. The recirc phase is pumping the treated water from ice condenser melting over the first part of the accident

A is incorrect because the purpose of spray for injection phase is pressure reduction

B is incorrect because injection phase is from FWST

C is incorrect because Recirculation phase is from sump.

Technical Reference(s): CNT NF, pg 15, 67 (Attach if not previously provided)

TS Basis 3.6.6

Proposed references to be provided to applicants during examination: None

Learning Objective: CNT-NF Obj 18 (As available)

Question Source: Bank # X

Modified Bank # _____ (Note changes or attach parent)

New _____

Question History: Last NRC Exam McGuire 2003 RO

Question Cognitive Level: Memory or Fundamental Knowledge X

Comprehension or Analysis _____

10 CFR Part 55 Content: 55.41 8

55.43 _____

Comments:

	OBJECTIVE	NLO	NLOR	LPRO	LPSO	LOR
11	Describe how the ice condenser temperature is maintained during normal operation.	X	X	X	X	X
12	State the purpose of the following NF Ice Making System components: • Glycol Recirc Pumps • "Run-Off-Fill" switches • Ice Making Solution Mixing Tank.	X	X	X	X	
13	Discuss the basic flowpath of ice from the ice storage bin to the ice baskets in the ice condenser.	X	X	X	X	
14	Concerning the ice condenser chart recorder: • State the purpose • List the information that can be accessed • Describe the modes of operation.			X	X	X
15	Given a limit and/or precaution associated with an NF System Operating Procedure, discuss its basis and applicability.	X	X	X	X	X
16	State the problems which will occur as a result of operating with elevated Ice condenser temperature.	X	X	X	X	X
17	State the purpose of iodine removal from containment following a LOCA..	X	X	X	X	X
18	Explain how iodine removal from containment atmosphere is accomplished and the effect of (sodium tetraborate) $Na_2B_4O_7$ on the removal process.	X	X	X	X	X
19	Describe how a failure of the ice condenser doors to open on a LOCA will effect containment sump level.	X	X	X	X	X
20	Describe how a failure of the ice condenser doors to open on a HELBIC will effect peak containment pressure.	X	X	X	X	X

1.0 INTRODUCTION

1.1 Purpose

Objective # 1

The Ice Condenser is designed to absorb thermal energy released at the time of a LOCA for the purpose of limiting initial peak pressure in containment. After the initial incident the ice condenser continues to absorb thermal energy, thus it helps to maintain a lower containment pressure for a period of time.

The ice in the Ice Condenser contains Sodium Tetraborate to help in pH control of the water (after ice melts) to enhance iodine absorption and the boron acts as a neutron poison.

1.2 General Description

The Ice Condenser region is essentially an insulated cold storage room located inside containment around the outside wall. It has inlet doors located in lower containment and upper deck doors located in upper containment. When a high energy line break inside containment occurs, the pressure increase inside lower containment will open the lower ice condenser doors causing the steam/air mixture to be forced through the ice condenser. The steam/air mixture will be cooled as it passes through the ice condenser and will be exhausted to upper containment through the intermediate and upper deck doors. After the mixture becomes a liquid it will drain back to lower containment through the refueling cavity drains or through the ice condenser floor drains.

During normal operation, the ice bed temperature is maintained by a refrigeration system which passes cold air through the ice condenser and glycol through the ice condenser floor cooling coils.

The initial ice load and make-up to the ice condenser is provided by the ice fabrication sub-system and ice conveyor sub-system. Periodic makeup is performed during plant outages due to loss of ice as a result of sublimation. Periodic makeup is performed during outages by the ice conveyor lines which are temporally installed for this evolution.

3.2 Abnormal and Emergency Operation

At the beginning of a LOCA, Lower containment pressure will be greater than upper containment pressure. When differential pressure is greater than 1.0 lbs/ft^2 the lower doors will open. The steam /air flow thru the ice condenser will open the intermediate and top deck doors. The ice will absorb large amounts of energy from the steam/hot air mixture as it passes through the ice condenser. This will reduce the peak pressure in containment.

Hydrogen accumulation inside containment during a LOCA presents an explosion hazard. Emergency procedure EP/1or2/A/5000/E-0 (Reactor Trip or Safety Injection) directs the operator to place the Hydrogen Igniters in operation and dispatch an operator to turn off the NF AHUs once a LOCA has been determined. The containment response to hydrogen combustion as a result of the deliberate ignition of hydrogen (Hydrogen Igniters) following core damage has been analyzed. This analysis has **not** been performed with the NF AHUs in service. Since the containment response analysis does **not** consider the impact of the operation of the NF AHUs, they should be stopped prior to the release of hydrogen in a core damage accident and prior to the operation of the igniters.

Objective #17, 18

Iodine presents a radiological problem (internal dose and dose at the site boundary in the event of containment leakage) in containment following a LOCA. By removing iodine, the radiological airborne hazard can be reduced. Some Iodine (about 80%) will be trapped in the containment sump water by hydrolysis:

$$3I_2 + 3H_2O \rightarrow 5I^- + IO_3^- + 6H^+$$

The efficiency of this interaction can be increased to almost 100% by increasing the pH of the solution. This is accomplished by adding sodium tetraborate to the ice making solution mixing tank.

Objective #19, 20

Operation of the ice condenser is critical to the containment response following a HELBIC. The ice condenser and containment spray work together to maintain containment pressure below 15 psig. If for some reason one or more of the ice condenser doors failed to open, containment pressure could exceed the design basis pressure. Excessive containment leakage or in worst case scenario, a breach of containment, could result in excessive dose to plant personnel and the general population near the plant. In addition, the ice melt provides borated water for the containment sump. Following a LOCA, the melted ice provides 2000 ppm borated water (Tech Spec minimum of 1800 ppm.) to aid in the containment sump inventory available for recirculation through the core.

B 3.6 CONTAINMENT SYSTEMS

B 3.6.6 Containment Spray System

BASES

BACKGROUND

The Containment Spray System provides containment atmosphere cooling to limit post accident pressure and temperature in containment to less than the design values. **Reduction of containment pressure and the iodine removal capability of the spray reduce the release of fission product radioactivity from containment to the environment**, in the event of a Design Basis Accident (DBA). The Containment Spray System is designed to meet the requirements of 10 CFR 50, Appendix A, GDC 38, "Containment Heat Removal," GDC 39, "Inspection of Containment Heat Removal Systems," GDC 40, "Testing of Containment Heat Removal Systems," GDC 41, "Containment Atmosphere Cleanup," GDC 42, "Inspection of Containment Atmosphere Cleanup Systems," and GDC 43, "Testing of Containment Atmosphere Cleanup Systems" (Ref. 1).

The Containment Spray System consists of two separate trains of equal capacity, each capable of meeting the system design basis spray coverage. Each train includes a containment spray pump, one containment spray heat exchanger, spray headers, nozzles, valves, and piping. Each train is powered from a separate Engineered Safety Feature (ESF) bus. The refueling water storage tank (RWST) supplies borated water to the Containment Spray System during the injection phase of operation. In the recirculation mode of operation, containment spray pump suction is transferred from the RWST to the containment recirculation sump(s).

The diversion of a portion of the recirculation flow from each train of the Residual Heat Removal (RHR) System to additional redundant spray headers completes the Containment Spray System heat removal capability. Each RHR train is capable of supplying spray coverage, if required, to supplement the Containment Spray System.

The Containment Spray System and RHR System provide a spray of cold or subcooled borated water into the upper containment volume to limit the containment pressure and temperature during a DBA. The RWST solution temperature is an important factor in determining the heat removal capability of the Containment Spray System during the injection phase. In the recirculation mode of operation, heat is removed from the containment sump water by the Containment Spray System and RHR heat exchangers. Each train of the Containment Spray System, supplemented by a train of RHR spray, provides adequate spray

Examination Outline Cross-reference:	Level	RO	SRO
	Tier #	2	
	Group #	2	
	K/A #	028 A1.01	
	Importance Rating	3.4	

Ability to predict and/or monitor changes in parameter (to prevent exceeding design limits) associated with operating the HRPS controls including: Hydrogen concentration

Proposed Question: Common 32

A reactor trip and SI actuation have occurred.

- Actions of E-0, Reactor Trip or Safety Injection, are complete
- Subsequent ECCS failures have caused transition to FR-C.2, Response to Degraded Core Cooling.
- The Hydrogen Analyzers have been placed in service.
- The NF AHUs have been secured.
- The Hydrogen Igniters have been energized.
- Hydrogen concentration has risen to 3.7%.

Which ONE (1) of the following describes the appropriate method for reducing Hydrogen concentration?

A. Place the hydrogen recombiners in service.

B. Shut off the hydrogen igniters AND place the hydrogen recombiners in service.

C. Shut off the hydrogen igniters and obtain a recommendation from Station Management on the best method for hydrogen removal.

D. Do NOT shut off hydrogen igniters or place hydrogen recombiners in service. Obtain a recommendation from Station Management on the best method for hydrogen removal.

Proposed Answer: A

Explanation (Optional):

A is Correct because H2 is greater than 0.5% but less than 6%

B is incorrect because H2 igniters will not be secured once running, but credible because the applicant may believe the igniters should not be running as containment approaches a flammable atmosphere

C is incorrect for reasons A and B above

D is correct. If H2 concentration exceeds 6%, Mgmt must be consulted prior to reducing H2 concentration. Below 6%, recombiners are used

Technical Reference(s): FR-C.2, Step 4 (Attach if not previously provided)

Proposed references to be provided to applicants during examination: None

Learning Objective: EP-FRC, obj 4 (As available)

Question Source: Bank # _____

Modified Bank # X (Note changes or attach parent)

New _____

Question History: Last NRC Exam Catawba 2005

Question Cognitive Level: Memory or Fundamental Knowledge _____

Comprehension or Analysis X

10 CFR Part 55 Content: 55.41 10

55.43 _____

Comments:

CLASSROOM TIME (Hours)

NLO	NLOR	LPRO	LPSO	LOR
		3.0	3.0	2.0

OBJECTIVES

SEQ	OBJECTIVE	NLO	NLOR	LPRO	LPSO	LOR
1	Explain the purpose of each procedure in the FR-C series. EPFRC001			X	X	
2	Discuss the entry and exit guidance for each procedure in the FR-C series. EPFRC002			X	X	
3	Discuss the mitigating strategy (major actions) of each procedure in the FR-C series. EPFRC003			X	X	X
4	Discuss the basis for any note, caution or step for each procedure in the FR-C series. EPFRC004			X	X	X
5	Given the Foldout page, discuss the actions included and the basis for these actions. EPFRC005			X	X	X
6	Given the appropriate procedure, evaluate a given scenario describing accident events and plant conditions to determine any required action and its basis. EPFRC006			X	X	X
7	Discuss the time critical task(s) associated with the FR-C series procedures including the time requirements and the basis for these requirements. EPFRC007			X	X	X

ACTION/EXPECTED RESPONSE	RESPONSE NOT OBTAINED
4. **Check containment H_2 concentration:**	
__ a. Ensure Operator dispatched to stop Unit 1 NF AHUs.	
__ b. Check H_2 analyzers - IN SERVICE.	b. Perform the following: __ 1) Dispatch operator to place H_2 analyzers in service **PER** EP/1/A/5000/G-1 (Generic Enclosures), Enclosure 5 (Placing H_2 Analyzers In Service). __ 2) **WHEN** H_2 analyzers in service, **THEN** complete Steps 4.c through 4.e. __ 3) **GO TO** Step 5.
__ c. Check H_2 concentration - LESS THAN 6%.	c. Perform the following: __ 1) Obtain recommendation from station management to reduce H_2 concentration. __ 2) **GO TO** Step 5.
__ d. Check H_2 igniters - ON.	d. **WHEN** the following conditions met, **THEN** place H_2 igniters in service: __ • NF AHUs off __ • H_2 concentration less than 6%.
__ e. Check H_2 concentration - LESS THAN 0.5%.	__ e. Dispatch operator to place H_2 recombiners in service **PER** EP/1/A/5000/G-1 (Generic Enclosures), Enclosure 4 (Placing H_2 Recombiners In Service).

Examination Outline Cross-reference:	Level	RO	SRO
	Tier #	2	
	Group #	2	
	K/A #	035 K5.01	
	Importance Rating	3.4	

Knowledge of operational implications of the following concepts as the apply to the S/GS: Effect of secondary parameters, pressure, and temperature on reactivity

Proposed Question: Common 33

Given the following conditions:

- Plant Startup following Refueling.
- Reactor power is at 68%.

Governor Valve #4 drifts OPEN approximately 10% from its initial position.

Assuming no action by the crew, which ONE (1) of the following describes the initial effect of the valve failure?

	Main Steam Pressure	Tave	Reactor Power
A.	Increase	Increase	Decrease
B.	Increase	Decrease	Increase
C.	Decrease	Increase	Decrease
D.	Decrease	Decrease	Increase

Proposed Answer: D

Explanation (Optional):
D. Correct. If a control valve fails open, steam pressure will decrease, due to the increased steam flow and no action to raise NC temperature, such as Control Rod Withdrawal. If steam pressure decreases, Tcold will also decrease, resulting in a lower Tave. Reactor power will increase because of increased steam flow. Increased power may also be seen on the higher NC SYSTEM Delta T.
A incorrect. Effect of a steam dump or turbine control valve failing in the opposite direction than stated
B incorrect. Steam pressure would decrease, credible because steam flow would increase, and combination of Tave and reactor power is correct
C incorrect. Steam pressure is correct, but Tave and power are incorrect. Credible because the relationship between Tave and power is valid, but incorrect for the failure stated

Technical Reference(s): BNT-RT08 PG 29 (Attach if not previously provided)
THF-CY PG 35

Proposed references to be provided to applicants during examination: None

Learning Objective: None (As available)

Question Source: Bank # X
Modified Bank # _____ (Note changes or attach parent)
New _____

Question History: Last NRC Exam Robinson 2004

Question Cognitive Level: Memory or Fundamental Knowledge _____
Comprehension or Analysis X

10 CFR Part 55 Content: 55.41 X
55.43 _____

Comments:

Q35

Let's illustrate this with some examples.

Objective 24

Example 4 – Reactivity insertions with no change in steam demand

Assume first that control rods are withdrawn without any change in secondary system steam demand. The rod withdrawal adds positive reactivity, k_{eff} becomes greater than 1, and power starts to increase. Since steam demand hasn't changed, a positive PMM core causes the moderator temperature to increase as fuel temperature increases. Both of these add negative reactivity. The power increase stops when the reactivities are balanced but power is still greater than demand (still +PMM). Moderator temperature continues to increase, adding negative reactivity and driving k_{eff} below 1. Power now decreases and fuel temperature decreases, adding positive reactivity. When power decreases back to match steam demand (PMM = 0), moderator temperature stops increasing, and power stops decreasing. The positive reactivity added by the rod withdrawal is balanced by negative reactivity added by an increase in moderator temperature (reactivity is balanced) and the reactor is back to steady state. Reactor power has returned to its original value and moderator temperature is higher.

For control rod insertions, the opposite of the above occurs, the insertion adds negative reactivity, k_{eff} becomes less than 1, power starts to decrease (net reactivity becomes negative), adding positive reactivity as fuel temperature decreases, and the negative PMM causes moderator temperature to decrease, adding positive reactivity. The power decrease stops when the reactivity is balanced but power is still less than steam demand (still –PMM). Moderator temperature continues to decrease, adding positive reactivity and power increases back to match steam demand, adding negative reactivity as fuel temperature increases. When the PMM = 0 the moderator temperature stops decreasing, and power remains constant. The reactivity is balanced, the PMM = 0, and the reactor is back to steady state. The negative reactivity added by the rod insertion is balanced by positive reactivity added by a decrease in moderator temperature.

This example illustrates the inherent stability of the reactor. We disturbed the reactivity balance by moving control rods. With no further actions, the reactor returned to steady state through the interaction of moderator temperature reactivity feedback and fuel temperature reactivity feedback. The reactor always tries to return to a steady state condition, not necessarily the same as before the transient but a steady state condition with reactivity balanced and PMM = 0.

Example 5 – Changes in steam demand with no automatic or operator action

Now assume that steam demand is increased with no control rod motion available (rod control system in manual). As steam flow increases, the additional steam necessary is produced by taking more energy from the Reactor Coolant System. The PMM becomes negative, causing T_c to begin decreasing. The colder water returning to the core provides better neutron moderation, adding positive reactivity (reactivity balance becomes positive), causing reactor power to begin increasing. The increasing fuel temperature adds negative reactivity. Eventually, the positive reactivity added by the decrease in moderator temperature will be offset by the increase in fuel temperature (reactivity balance becomes zero) and reactor power will be equal to steam demand (PMM becomes zero). The reactor is now at steady state at a higher power level and a lower moderator temperature. The negative reactivity associated with the increased power level is balanced by the positive reactivity added by the reduced moderator temperature.

In the second example, note that the amount of power increase depended on the amount of change in steam demand – this is the "load following" behavior that was mentioned. The reactor

OP-MC-1

Q33

We normally OPERATE the Turbine in the "sequential" Governor Valve mode. At full power we try to OPERATE with the Governor Valves FULLY OPEN to minimize this throttling effect on overall cycle efficiency.

Operating Power Level

Objective # 5

In general, the plant is more efficient at full load than it is at lower power levels because of the following:

- Turbine is designed to be most efficient at full load.
- Less Throttling Losses
- MSR's and Feedwater Heaters in full operation.

It can be seen from $Q_{sec} = UA(T_{ave} - T_{stm})$ that as power increases, the ΔT between T_{ave} and T_{stm} must increase. (Note that U is the coefficient for heat transfer for the S/G tubes and A is the total surface area of the S/G tubes. Both of these remain essentially constant.) If T_{ave} were allowed to decrease, then T_{stm} would have to decrease which would result in steam pressure decreasing. The resulting steam pressure decrease would severely reduce efficiency. Therefore, to limit the amount that steam pressure decreases with load, NCS T_{ave} is ramped-up by automatic rod withdrawal or manual boron dilution. All in all, NCS T_{ave} is ramped-up about 30°F above NCS NO-LOAD T_{ave}. T_{cold} remains essentially constant as NCS T_{ave} is ramped up. Steam pressure still decreases but not enough to hurt efficiency.

In addition, as power level is increased, the increased HEAT Load on the condenser would cause condenser pressure to increase thereby reducing efficiency. However, our procedures ensure that we have sufficient RC pump flow to limit this effect, as power is increase to 100%.

Other methods of maintaining maximum efficiency.

We minimize auxiliaries by:

- Operating with only one CF pump below 40% power.
- Utilizing no more RC Pumps than required to maintain Condenser Pressure.
- Minimizing the number of Hotwell and Condensate Booster Pumps operating.
- Minimizing Steam Generator blowdown to a value needed to maintain proper Steam Generator chemistry.
- Fixing steam leaks as they occur.
- Operating with the Air Ejector Condenser and Hydrogen Coolers, etc. to reclaim HEAT losses.

Indication of Efficiency

The operator's indication of efficiency is the relationship between Turbine Load (MW_e) and Reactor Power. If efficiency increases the electric output can be higher for a given Reactor Power output.

$$\eta = \frac{TurbinePower}{ReactorPower}$$

Examination Outline Cross-reference:	Level	RO	SRO
	Tier #	2	
	Group #	2	
	K/A #	045 A2.17	
	Importance Rating	2.7	

Ability to (a) predict the impacts of the following malfunctions or operation on the MT/G system; and (b) based on those predictions, use procedures to correct, control, or mitigate the consequences of those malfunctions or operations: Malfunction of electrohydraulic control

Proposed Question: Common 34

Given the following conditions on Unit 1:

- The unit is at 23% power during a power increase.
- The following alarm is received:
  - DEH Turbine Runback
- Generator load and reactor power are decreasing.
- The crew has NOT determined the cause.
- The crew enters AP/1/A/5500/003, Load Rejection.
- The unit stabilizes at 4% power.

In accordance with AP/1/A/5500/003, which ONE (1) of the following actions is required to be performed?

A. Reset C-7A and place steam dumps in the Steam Pressure Mode.

B. Trip the reactor and enter EP/1/A/5000/E-0, Reactor Trip or Safety Injection.

C. Place Rod Control in MANUAL and stabilize power at its present value by ensuring IR Startup Rate equals zero.

D. Place Rod Control in Manual and raise power to a stable value of 12% - 15% while determining the cause of the runback.

Proposed Answer: B

Explanation (Optional):

A is incorrect, although it would be performed if power did not go below 5% and Tave/Tref was not within 4 degrees F

B is correct.

C is incorrect but credible because power is held stable by observing IR SUR

D is incorrect but credible because it is the power that the plant will be held at if it goes below 20% but remains above 5%

Technical Reference(s): AP/1/A/5500/003 Step 8/9 (Attach if not previously provided)
AP/03 Basis Document, pg 8, 9

Proposed references to be provided to applicants during examination: None

Learning Objective: LP AP03 Obj 2 (As available)

Question Source: Bank # _____
Modified Bank # _____ (Note changes or attach parent)
New X

Question History: Last NRC Exam _____

Question Cognitive Level: Memory or Fundamental Knowledge _____
Comprehension or Analysis X

10 CFR Part 55 Content: 55.41 10
55.43 _____

Comments:

CLASSROOM TIME (Hours)

NLO	NLOR	LPRO	LPSO	LOR
		1.0	1.0	1.0

OBJECTIVES

	OBJECTIVE	NLO	NLOR	LPRO	LPSO	LOR
1	Concerning AP/1/A/5500/03 (Load Rejection): • State the purpose of the AP • Recognize the symptoms that would require implementation of the AP. AP03001			X	X	X
2	Given scenarios describing accident events and plant conditions, evaluate the basis for any caution, note, or step. AP03002			X	X	X

ACTION/EXPECTED RESPONSE	RESPONSE NOT OBTAINED
__ 7. **Check P/R meters - LESS THAN 20%.**	**Perform the following:** __ a. Designate an operator to continuously monitor reactor power. __ b. **IF AT ANY TIME** reactor power is less than 20%, **THEN** perform Step 8 to stabilize reactor power. __ c. **GO TO** Step 9.
8. **Stabilize reactor power as follows:**	
__ a. Place control rods in manual.	
__ b. Check P/R meters - GREATER THAN 5%.	b. Perform the following: __ 1) Trip Reactor. __ 2) **GO TO** EP/1/A/5000/E-0 (Reactor Trip or Safety Injection).
__ c. Stabilize reactor power, as indicated on P/R meters, between 12%-15% with control rods in manual.	
__ d. **WHEN** reactor power is stabilized between 12%-15%, **THEN** maintain I/R startup rate at "0" to ensure a constant power level.	
e. **IF AT ANY TIME** reactor power goes below 5%, **THEN**: __ 1) Trip Reactor. __ 2) **GO TO** EP/1/A/5000/E-0 (Reactor Trip or Safety Injection).	

ACTION/EXPECTED RESPONSE	RESPONSE NOT OBTAINED
__ 9. **Check condenser dump valves-MODULATING OPEN.**	**IF T-Ave is greater than 4°F above T-Ref, THEN transfer steam dumps to steam pressure mode as follows:** __ a. Ensure "STM PRESS CONTROLLER" potentiometer set at 8.4 (1092 PSIG). __ b. Place "STM PRESS CONTROLLER" in manual. __ c. Adjust "STM PRESS CONTROLLER" output to 0%. d. Using "STEAM DUMP SELECT" switch, perform the following: __ 1) Ensure C-7A reset. __ 2) Place steam dumps in steam pressure mode. __ e. **IF** "STEAM HEADER PRESSURE" is greater than 1110 PSIG, **THEN** manually open steam dumps to control pressure 1090-1110 PSIG. __ f. Place "STM PRESS CONTROLLER" in auto.

reactor scram at the 25 percent low power high flux scram setpoint that was unanticipated by the crew. The scram was followed immediately by a partial safety injection and partial main steam isolation."

Note the following excerpt from SOER 96-01: Crew Distractions.

During the Calvert Cliffs, Catawba, Quad Cities, and Wolf Creek events, the operating crews were distracted by activities of less importance and were unable to adequately monitor critical plant activities. In at least three instances (Calvert Cliffs, Catawba, Quad Cities) concerns over secondary plant components resulted in supervisors neglecting to monitor the condition of the reactor.

STEP 8:

PURPOSE:

Ensure reactor power doesn't decrease too far on a load rejection.

DISCUSSION:

This step attempts to establish control of reactor power between 12% and 15% for those scenarios where the runback would reduce power to this point or lower. A setpoint of 20% was chosen with some margin to losing the auto rod control interlock @ 15% impulse pressure (C-5). Below this power, rods are directed to be placed in manual because auto rod withdrawal is blocked below C-5.

Even though turbine load may be reduced to less than 12-15%, the crew is directed to stabilize reactor power here. The advantage of maintaining this higher power level is more stable plant control. As a continuous action, if power does get less than 5%, the crew is directed to trip the reactor. This should avoid unstable plant control that would challenge automatic S/G level reactor trips, operating below minimum temperature for criticality, or making any unplanned mode changes.

Since rate of change of power level is difficult to detect on the power range meters at low power, a step is provided to cue the operator that I/R startup rate meters indicating "0" is a good indication of constant power level.

STEP 9:

PURPOSE:

Ensure the rejected turbine load is replaced with steam dump load, until reactor power can be reduced to turbine power.

DISCUSSION:

The turbine control system can reject turbine load faster than the reactor control system can reduce reactor power. If secondary power isn't held close to reactor power, NC system temperature and pressure would increase rapidly.

This step addresses checking proper operation of the condenser dump valves. If they're not operating properly, guidance is given to control them via the steam pressure controller.

The "T-Ave greater than 4°F above T-Ref" value is based on a 3°F deadband before the condenser dumps start modulating open. This gives reactor control a chance to handle that much error by driving control rods. Provided T-Ave is more than 3°F above T-Ref, plus 1°F for instrument inaccuracies, the RNO gives guidance to use the steam pressure controller to open the condenser dumps, since the T-Ave controller is not functioning properly.

The RNO directs placing the steam pressure controller in manual with a zero output prior to placing steam dumps in the steam pressure mode so the steam dumps don't immediately open. This allows the operator to control their opening. Prior to selecting steam pressure mode, C-7A is reset, since this switch position is on the other side of the T-ave mode switch position. This ensures C-7A reset when going back to the T-Ave mode from the steam pressure mode.

If steam pressure is above 1110 PSIG, the operator is directed to open the condenser dumps to control at 1090-1110 PSIG. In steam pressure mode, the steam dump control system does not have an integral circuit to bring pressure back to setpoint (steam pressure of 1092 PSIG). It is proportional only. Therefore, steam pressure and T-ave should be higher than setpoint, depending on how high reactor power is.

A couple of considerations about trying to control steam dumps manually during a load rejection are:

1. A large load rejection that is accompanied by the T-ave controller not working is likely to result in a reactor trip on high pressurizer pressure.
2. During a load rejection scenario, controlling steam pressure at 1092 PSIG will result in a higher than normal T-ave because this steam pressure is higher than normal for at power conditions. This is still better than allowing steam pressure to be even higher. This effect is less at lower power levels.

STEP 10:

PURPOSE:

Restore IPB cooling, as appropriate, to allow continued generator operation above 10,000 amps.

DISCUSSION:

Examination Outline Cross-reference:	Level	RO	SRO
	Tier #	2	
	Group #	2	
	K/A #	055 K3.01	
	Importance Rating	2.5	

Knowledge of the effect that a loss or malfunction of the CARS will have on the following: Main condenser

Proposed Question: Common 35

Given the following:

- The unit is at 100% power.
- All major controls are in AUTO.
- Tave has remained constant.
- Main Generator output has DECREASED 25 Mwe.

Which ONE (1) of the following describes the cause of the above indications?

A. SG Safety Valve leakage.

B. Condenser Air Ejector malfunction.

C. Inadvertent NC SYSTEM dilution.

D. Inadvertent Control Rod insertion.

Proposed Answer: B

Explanation (Optional):
B is correct. If an Air Ejector malfunctions, non-condensable gases will build in Main Condenser. As gases build, vacuum will decrease. If vacuum decreases, then backpressure is rising, which will cause a decrease in steam flow (Delta P from SGs to condenser lowers). When Steam flow through the turbine is reduced, electrical load will also be reduced. In this case, the steam flow change is transmitted back to the NC SYSTEM, causing Tave to rise.
A is credible because SG Safety Valve leakage can result in a lower output from the Main Generator. It is incorrect because Tavg will decrease.
C is credible because an inadvertent dilution will cause Tavg to rise. It is incorrect because Main Generator load will rise also.
D is incorrect because Tavg will decrease. It is credible because Main Generator load will also decrease.

Proposed Answer: B

Explanation (Optional):
B is correct. If an Air Ejector malfunctions, non-condensable gases will build in Main Condenser. As gases build, vacuum will decrease. If vacuum decreases, then backpressure is rising, which will cause a decrease in steam flow (Delta P from SGs to condenser lowers). When Steam flow through the turbine is reduced, electrical load will also be reduced. In this case, the steam flow change is transmitted back to the NC SYSTEM, causing Tave to rise.
A is credible because SG Safety Valve leakage can result in a lower output from the Main Generator. It is incorrect because Tavg will decrease.
C is credible because an inadvertent dilution will cause Tavg to rise. It is incorrect because Main Generator load will rise also.
D is incorrect because Tavg will decrease. It is credible because Main Generator load will also decrease.

Technical Reference(s): Demo on simulator (Attach if not previously provided)

Proposed references to be provided to applicants during examination: None

Learning Objective: None (As available)

Question Source: Bank # X
Modified Bank # _____ (Note changes or attach parent)
New _____

Question History: Last NRC Exam IP3 2003

Question Cognitive Level: Memory or Fundamental Knowledge _____
Comprehension or Analysis X

10 CFR Part 55 Content: 55.41 X
55.43 _____

Comments:

Examination Outline Cross-reference:	Level	RO	SRO
	Tier #	2	
	Group #	2	
	K/A #	071 K4.05	
	Importance Rating	2.7	

Knowledge of design feature(s) and/or interlock(s) which provide for the following: Point of release

Proposed Question: Common 36

Which ONE (1) of the following components will stop the Unit 1 Aux Building Ventilation Unfiltered Exhaust Fans on high radiation in the event of a Waste Gas leak to the Aux Building atmosphere?

A. 1-EMF-37 (UNIT VENT IODINE HI RAD)

B. 1-EMF-36 (UNIT VENT GAS HI RAD)

C. 1-EMF-41 (AUX BLDG VENT HI RAD)

D. 1-EMF-50 (WASTE GAS DISCHARGE HI RAD)

Proposed Answer: A

Explanation (Optional):
A is correct. EMF-35 or 37 will stop the fans
B is incorrect, would close WG-160 if hi rad on waste gas discharge
C is incorrect, would realign Aux Building filtered exhaust
D is incorrect. Would stop fans on high waste gas discharge rad (Trip 2) but this is a leak to atmosphere

Technical Reference(s): PSS-VA, pg 17 (Attach if not previously provided)
WE-EMF, pg 21, 27

Proposed references to be provided to applicants during examination: None

Learning Objective: WE-EMF Obj 3, (As available)
PSS-VA, obj 6, 12

Question Source: Bank # _____

Modified Bank # X(WEEMFN08) (Note changes or attach parent)

New _____

Question History: Last NRC Exam _____

Question Cognitive Level: Memory or Fundamental Knowledge X

Comprehension or Analysis _____

10 CFR Part 55 Content: 55.41 11

55.43 _____

Comments:

CLASSROOM TIME (Hours)

NLO	NLOR	LPRO	LPSO	LOR
2	2	2	2	1

OBJECTIVES

	OBJECTIVE	NLO	NLOR	LPRO	LPSO	LOR
1	State the purpose of the Auxiliary Building Ventilation System.	X	X	X	X	
2	Sketch per Drawing 7.1 or describe the basic flowpath of the Auxiliary Building Ventilation System's Supply AHUs and Exhaust Fans.	X	X	X	X	
3	Discuss the operation, local controls and indications associated with the following components: • Supply AHUs • Unfiltered Exhaust Fans • Filtered Exhaust Fans • Counting Room AHU	X	X	X	X	
4	State the interlocks between the VA System's Supply and Exhaust Fans.	X	X	X	X	X
5	State the cooling and heating water supply for the VA Supply AHUs.	X	X	X	X	
6	Discuss the trips associated with the VA System Unfiltered Exhaust Fans.	X	X	X	X	X
7	Concerning the Engineering Safeguard AHUs: • State the purpose of the ND, NS, and KF AHUs. • Discuss the operation of the ES Pump AHUs. • State the interlocks associated with each ES Pump AHU.	X	X	X	X	X
8	Given a Limit and Precaution associated with the VA System, discuss its basis and when it applies.	X	X	X	X	X
9	Describe the normal operational lineup associated with the VA System.	X	X	X	X	

OBJECTIVES

	OBJECTIVE	NLO	NLOR	LPRO	LPSO	LOR
10	Describe the operation of the VA System following a Blackout and/or Safety Injection signal.	X	X	X	X	X
11	Discuss when the VA Systems Filtered Exhaust Fan's "RESET" pushbutton will be used.	X	X	X	X	X
12	Discuss the response of the VA System to a Trip II alarm on the following EMFs. • EMF-35(L) Unit Vent Particulate (Low Range) • EMF-37 Unit Vent Iodine • EMF-41 Auxiliary Building Ventilation	X	X	X	X	X
13	Concerning the Technical Specifications related to the VA System:					
	• Given the LCO title, state the LCO (including any COLR values) and applicability.			X	X	X
	• For any LCO's that have action required within one hour, state the action.			X	X	X
	• Given a set of parameter values or system conditions, determine if any Tech Spec LCO's is(are) not met and any action(s) required within one hour.			X	X	X
	• Given a set of parameter values or system conditions and the appropriate Tech Spec, determine required action(s).			X	X	X
	• Discuss the bases for a given Tech. Spec. LCO or Safety Limit.				X	*
	* SRO ONLY					

CLASSROOM TIME (Hours)

NLO	NLOR	LPRO	LPSO	LOR
3	3	3	3	2

OBJECTIVES

SEQ	OBJECTIVE	NLO	NLOR	LPRO	LPSO	LOR
1	State the purpose of the Process and Area Radiation Monitoring System. WEEMF001	X	X	X	X	
2	List the process monitored by each EMF and why it is monitored. WEEMF002	X	X	X	X	X
3	Describe the automatic actions that occur as a result of a Trip alarm for each of the following EMFs • 1(2) EMF 31 Unit 1(2) Conv. Waste Treatment System • 1(2) EMF 34(L) Unit 1(2) Steam Generator Sample • 1(2) EMF 35(L) Unit 1(2) Unit Vent Part. (low range) • 1(2) EMF 36(L) Unit 1(2) Unit Vent Gas (low range) • 1(2) EMF 37 Unit 1(2) Unit Vent Iodine Monitor • 1(2) EMF 38(L) Unit 1(2) Cont. Part. (low range) • 1(2) EMF 39(L) Unit 1(2) Cont. Gas (low range) • 1(2) EMF 40 Unit 1(2) Cont. Iodine • 0EMF 41 Aux. Bldg Vent. • 1(2) EMF 42 Unit 1(2) Spent Fuel Bldg. Vent. • 1(2) EMF 44(L) Unit 1(2) Cont. Vent. Drain Tank • 1(2) EMF 46A/B Unit 1(2) Component Cooling • 0EMF 47 Boron Recycle Evap. Distillate (cont.)	X	X	X	X	X

{SEQ is the order in which the objective is first covered in the lesson plan)

The purpose of the auto actions:

- **EMF34 effluent is directed to ground water drainage sump "A", therefore isolating this flowpath prevents contaminating this sump.**
- **S/G blowdown blowoff tank effluent may be directed to either the condensate system or the turbine building sump, isolating blowdown will prevent contaminating these systems via the blowdown pathway.**
- **Conventional sampling effluent may be directed to the CST or turbine building sump, isolating conventional sampling will prevent contaminating these systems via this pathway.**

These channels use dual range gamma liquid assembly. The low range uses a gamma liquid (NaI Scint) while the high range uses a GM detector.

2.1.4 Unit Vent Airborne Monitor

The following channels are used to monitor the unit vent:

- 1(2) EMF 35 (L) Unit 1(2) Unit Vent Particulate (Low Range)
- 1(2) EMF 36 (L) Unit 1(2) Unit Vent Gas (Low Range)
- 1(2) EMF 36 (H) Unit 1(2) Unit Vent Gas (High Range)
- 1(2) EMF 37 Unit 1(2) Unit Vent Iodine

Objective # 2

These EMFs, utilize a sample probe located within the Unit Vent to monitor, record, and alarm the gaseous, iodine and air particulate activity levels released to the atmosphere from the combined ventilation systems within the station.

Atmosphere from the Containment Purge, Containment Annulus Ventilation, Auxiliary Building Ventilation, Condenser Air Ejector, Fuel Pool Ventilation and other potentially radioactive systems are discharged through the Unit Vent.

Objective # 2, 3

The automatic actions for these EMFs are as follows:

- **A Trip 2 high radiation alarm on 1EMF 35 (L), 1EMF 37, 2EMF 35 (L), or 2EMF 37 will stop Auxiliary Building Unfiltered Exhaust Fans 1ABFXF-1A, 1ABFXF-1B, 2ABFXF-1A, and 2ABFXF-2B.**
- **A Trip 2 high radiation alarm on 1EMF 36 (L) will close 1WG160 to terminate waste gas discharge.**
- **1EMF 36 (L) will also alarm and indicate at the Waste Gas Processing Panel.**

NOTE: Sample point 6 has been deleted, so only 11 points are currently monitored.

A 12-point timed sample system is used to control the solenoid valves (refer to Drawing 7.4). **Each sample point takes about 2.5 minutes, 1.5 minutes to purge and 1 minute to sample. Thus, each point will be sampled twice per hour.** The flow rate for each sample line is 1 scfm. This 1 scfm from the sampled line is routed through the detector. A SCAN/STOP switch is provided to control EMF 41 operation mode: (refer to Drawing 7.4)

- **Scan Mode - provides automatic sequential sampling of 11 Aux. Bldg areas. PT/1/A/4600/03B requires the toggle switch to be in the scan position.**
- **Stop - provides continuous sampling of one area.**

A ready light - illuminates while EMF is sampling and off while purging. A STEP switch allows manual selection of desired sample point. This option is available in the SCAN mode only. A point window provides an LED readout that displays selected sample point. When the scanner is selected to a single point, remote readout to the OAC and Pi database is disabled. Only the local Control Room module readout is available.

Objective # 2, 3

On a Trip 2 high radiation alarm, Aux. Building Ventilation will be passed through filter units ABFU-1 and ABFU-2 (filter bypass will be terminated). The following dampers will open:

- 1ABF-D-4A 2ABF-D-4A
- 1ABF-D-4B 2ABF-D-4B
- 1ABF-D-5A 2ABF-D-5A
- 1ABF-D-5B 2ABF-D-5B

The following dampers will close:

- 1ABF-D-3
- 2ABF-D-3
- 1ABF-D-6
- 2ABF-D-6

The purpose of the auto actions is to place the VA filters in service. Any Unit Vent release originating in the VA filtered exhaust system will be minimized.

This channel utilizes a single range beta gas (Plastic Scint.) detector.

Objective #6

The **Auxiliary Building Unfiltered Exhaust** Units consist of four (4) 50% capacity exhaust fans (Unit 1 and 2 have two each) extracting air from the "clean" areas of the Auxiliary Building and exhausting to the Unit Vent. These fans must be manually started with their ON/OFF switches located on control panels 1(2)RB-ECP-1. The air being exhausted by this system is monitored by 1(2)EMF-35) "Unit Vent Particulate", 1(2)EMF-36 "Unit Vent Gas", and 1(2)EMF-37 "Unit Vent Iodine" .

Air flow monitors are provided in the filtered and unfiltered exhaust ducts to the unit vent stack. The readouts for these monitors are located on control panels 1ABFX-CP-1b and 2ABFX-CP-1b for filtered exhaust and 1RB-CP-1 and 2RB-CP-1 for unfiltered exhaust. ON/OFF indications for the Unfiltered Exhaust Fans are located on the HVAC panel in the Control Room (**Refer to Drawing 7.3**).

All the Auxiliary Building **Unfiltered Exhaust** fans (Unit 1 and 2) are interlocked to trip on a Blackout or Safety Injection from either train of either unit. A Trip II on EMF-35(L) "Unit Vent Particulate (Low Range)" or EMF-37 "Unit Vent Iodine" on either unit will trip all (Unit 1 and Unit 2) Unfiltered Exhaust Fans.

2.3 Auxiliary Building Dampers (refer to Drawing 7.2)

The Auxiliary Building Ventilation System has various types of dampers to control air flow.

Isolation dampers 1(2)ABS-D-1 and D-3 : These dampers are on the inlet to the supply fans. These dampers are interlocked to close when the supply fans are tripped to ensure the ability of the filtered exhaust fans to maintain the ECCS Pump Rooms at 1/8 inch water gauge negative pressure.

Check Dampers 1(2)ABS-D-2 and D-4 : These dampers are located on the outlet of the supply fans. These dampers shall be able to close on a LOCA to ensure the ability of the filtered exhaust fans to maintain the ECCS Pump Rooms at 1/8 inch water gauge negative pressure.

Isolation dampers 1(2)ABF-D-1 and D-2 : These dampers are located at the outside air intake of the Filtered Exhaust Filter Units. A thermostat in the discharge of the charcoal absorber section of the filtered exhaust train controls these dampers to regulate outside air intake flow to maintain a maximum filter discharge temperature of 200°F.

Check Dampers 1(2)ABFX-D-1 and D-2 : These dampers are located on the discharge of the Filtered Exhaust Filter Unit Fans. These dampers allow flow from the fans to the unit vent and prevent back-flow through the adjacent fan.

Check Dampers 1ABUX-D-4 and 2ABUX-D-3 : These dampers are located on the common exhaust of the Unfiltered Exhaust Filter Units and fans. These dampers prevent flow from the unit vent back through the Unfiltered Exhaust to avoid a potential unmonitored radioactive release from the unit vent to the Auxiliary Building.

Dampers 1ABF-D-3 and 2ABF-D-3 : These dampers are located on the bypass portion of the Filtered Exhaust Filter Units. These dampers close to isolate potentially contaminated air from the environment and maintain the ability of the system to filter the

Question 34 WEEMFN08 WEEMFN08

1 Pt

Unit 1 is operating at full power and Unit 2 is refueling. Unit 1 is releasing a minimally decayed waste gas decay tank when a significant packing leak starts on isolation valve 1WG-160, (*WG Decay Tank Outlet to Unit Vent Control)*.

Which one of the following statements correctly describes the automatic actions required to assure that the leak is contained and filtered?

A. 1EMF-50 *(WASTE GAS DISCH HI RAD)* automatically closes 1WG-160, and 1EMF-41 *(AUX BLDG VENT HI RAD)* automatically stops the auxiliary building ventilation unfiltered exhaust fans.

B. 1EMF-41 automatically stops the auxiliary building ventilation unfiltered exhaust fans, and 1EMF-36 *(UNIT VENT HI RAD)* automatically closes 1WG-160.

C. 1EMF-36 automatically closes 1WG-160, and 1EMF-35 *(UNIT VENT PART HI RAD)* automatically aligns the auxiliary building ventilation filter trains.

D. 1EMF-35 automatically stops the auxiliary building ventilation unfiltered exhaust fans, and 1EMF-41 automatically aligns the auxiliary building ventilation filter trains.

Answer 34

Answer: D

Examination Outline Cross-reference:	Level	RO	SRO
	Tier #	2	
	Group #	2	
	K/A #	079 A2.01	
	Importance Rating	2.9	

Ability to (a) predict the impacts of the following malfunctions or operation on the Service Air system; and (b) based on those predictions, use procedures to correct, control, or mitigate the consequences of those malfunctions or operations: Cross-connection with IAS

Proposed Question: Common 37

Given the following conditions:

- A Loss of Instrument Air has occurred.
- The crew is performing actions of AP/1/A/5500/022, Loss of VI.
- VI pressure is 80 psig and going down slowly.

Which ONE (1) of the following is the required action related to 1VI-820, VI to VS Cross-Connect valve?

A. Verify 1VI-820 automatically closed; the valve closes at 90 psig decreasing.

B. Manually close 1VI-820; the valve has no automatic features.

C. Verify 1VI-820 automatically opens; the valve opens at 90 psig decreasing.

D. Manually open 1VI-820; the valve has no automatic features.

Proposed Answer: A

Explanation (Optional):
A is correct. Auto close at 90 psig
B is incorrect, as the valve will auto close
C is incorrect. Credible if candidate believes that VS will serve as a backup supply to VI
D is incorrect. Credible if candidate believes that VS can be aligned as a backup to VI

Technical Reference(s): SS-VI, pg 71 (Attach if not previously provided)

Proposed references to be provided to applicants during examination: None

Learning Objective: SS-VI Obj 7 (As available)

Question Source: Bank # _____
Modified Bank # _____ (Note changes or attach parent)
New X

Question History: Last NRC Exam _____

Question Cognitive Level: Memory or Fundamental Knowledge X
Comprehension or Analysis _____

10 CFR Part 55 Content: 55.41 7,10
55.43 _____

Comments:

	OBJECTIVE	NLO	NLOR	LPRO	LPSO	LOR
6	Explain the control function associated with each of the following VI Air Compressor (A, B, and C) pushbuttons: • Start/Stop pushbutton • Reset pushbutton	X	X	X	X	
7	List the interlocks / trips associated with operation of the following plant air system components: • VI Air Compressors • VI-820 (VI to VS Supply Valve) • VS Low Pressure Air Compressor • VB Air Compressor	X	X	X	X	X
8	Describe the following controls and/or indications associated with operation of VI Air Compressors D, E, and F: • On/Off switch and indication • Start/Stop pushbuttons • Pre-lube pump status • Acknowledge/Reset pushbutton	X	X	X	X	
9	Describe how the following VI System components function to provide a continuous supply of clean dry air: • Service Building Air Receiver Tanks (and drains) • Air Dryers • Auxiliary Building Instrument Air Tanks	X	X	X	X	
10	Explain each one of the following controls and /or indications, associated with the Breathing Air Compressors: • Start/Stop Pushbutton • "Power ON" Light • "RUN" Light • Discharge Air Over-Temperature Light • Rotor Oil Filter Service Light • Bearing Oil Filter Service Light • Air/Oil Separator Service Light • Service Air Filter ΔP Gauge • Purification Filter ΔP Gauge • Rotor Coolant Temperature Gauge • Discharge Air Pressure Gauge • Discharge Air Temperature Gauge	X	X	X	X	
11	Describe normal operation of the Breathing Air Compressor(s).	X	X	X	X	X

1.2.12 1VI-820 VI to VS Control Valve

The VI System normally supplies the Low Pressure VS System through control valve 1VI-820.

Controls and indication for 1VI-820 are located at the VI Sequencer Control Panel. The valve control switch is a three position switch:

- Close
- Auto
- Open

Objective # 7

Indication provided at the VI Sequencer Control Panel consists of the following:

- 1VI-820 Close (green light)
- 1VI-820 Open (red light)

This valve is normally in the AUTO position and will automatically close should VI System Pressure decrease to <90 psig. Upon valve closure 1VI-820 can be reopened once VI System Pressure has increased >90 psig by placing the valve to the OPEN position. After opening the valve 1VI-820, the switch should be returned to the AUTO position. If not, the valve will reopen without operator action, after closure, as soon as pressure has increased above 90 psig.

1.2.13 VI System Air Dryers A, B, and C

Objective # 9

VI Dryers A, B, and C (AMLOC-CHA Dryers) are fully automatic, desiccant-type air dryers designed to remove vaporous moisture from the Instrument Air System.

Generally, two of the three desiccant air dryers (A, B, and C) are in-service while one remains in standby, ready and available for service when needed. Each in-service dryer will alternately cycle air through one of the two desiccant chambers for moisture removal, while the other chamber is regenerated (removal of previously adsorbed moisture) and re-pressurized.

Examination Outline Cross-reference:	Level	RO	SRO
	Tier #	2	
	Group #	2	
	K/A #	086 K6.04	
	Importance Rating	2.6	

Knowledge of the effect of a loss or malfunction on the Fire Protection System following will have on the following: Fire, smoke, and heat detectors

Proposed Question:. Common 38

Given the following conditions:

- A Zone 55 (Service Building, IAE Offices, Admin Bldg, Project Offices) is received on the Fire Detection Processing Control Center (EFAPCC).
- An operator has been dispatched to investigate the alarm and discovers that the alarm is due to a failed detector.

Which of the following best describes the appropriate actions for the operator dispatched to investigate the alarm related to acknowledging/resetting the alarm?

Reference Provided

A. Wait for a member of the fire brigade to arrive to verify the alarm is not valid before resetting the alarm.

B. Acknowledge the sub-zone alarm on Control Room Board 1MC-16.

C. Notify the Control Room that the alarm is invalid and verify the sub-zone alarm clears when DGP-47 is reset from the EFAPCC.

D. Acknowledge the sub-zone alarm on DGP-47 and verify that the Zone 55 alarm clears on the EFAPCC.

Proposed Answer: D

Explanation (Optional):

A is incorrect. For failed detector, Fire Brigade response is not required. Valid because Fire Brigade would respond to other detector alarms if valid

B is incorrect. Acknowledging not the same as resetting the alarm.

C is incorrect. Opposite of actual reset. Acknowledgement is on DGP-47, not on EFAPCC

D is correct.

Technical Reference(s): SS-EFA, pg 21 (Attach if not previously provided)
OP/0/A/6400/002 C

Proposed references to be provided to applicants during examination: OP/0/A/6400/002 C

Learning Objective: SS-EFA -5 (As available)

Question Source: Bank # X(SSEFA013)
Modified Bank # _____ (Note changes or attach parent)
New _____

Question History: Last NRC Exam _____

Question Cognitive Level: Memory or Fundamental Knowledge X
Comprehension or Analysis _____

10 CFR Part 55 Content: 55.41 10
55.43 _____

Comments:

	OBJECTIVE	NLO	NLOR	LPRO	LPSO	LOR
5	Given OP/0/A/6400/002 C, describe how the operator can acknowledge/reset the Local Fire Detection Alarm Panels.	X	X	X	X	
6	Discuss the NLO's responsibility in performing the SLC actions: • Establishing an hourly fire watch in the area	X	X	X	X	
7	Concerning the Selected Licensee Commitments (SLC) related to the Fire Detection System:					
	• For any commitments that have action required within one hour, state the action.			X	X	X
	• Given a set of parameter values or system conditions, determine if any commitment(s) is (are) met and any action(s) required within one hour.			X	X	X
	• Given a set of plant parameters or system conditions and the SLC Manual, determine required action(s).			X	X	X
	• Given the SLC Manual , discuss the basis for a given commitment.				X	*
	* SRO only					

3.2. Abnormal and Emergency Operation

Objectives # 4, 5

There are two annunciators in the Control Room horse shoe area associated with the EFA System. Both of these alarms are on the unit #1 side on panel 1AD13. The first alarm to be covered is the **"FIRE DET SYS CPU PWR FAILURE", located at F-3**. Several immediate and supplementary actions are required to be performed if this annunciator comes in.

Refer to a current copy of OP/1/A/6100/010 N (Annunciator Response for Panel 1AD-13) to address the associated objective(s).

The other EFA alarm, **"FIRE DET SYS ALERT", is located on 1AD-13, E-3**. It is actuated when any of the zone's detectors reach their individual setpoints. It could also be triggered by a failed detector.

This Annunciator Response Procedure (ARP) provides information such as Automatic actions that should occur for certain zones and specific actions to take if the fire is in the Auxiliary Building, Reactor Building or Annulus.

Whenever this annunciator is received, the operator will go to the EFAPCC and determine which zone is in alarm. Then, an operator is sent to the area. If an actual fire is verified, the Fire Brigade is dispatched. RP/0/A/5700/025 (Fire Brigade Response) and AP/0/A/5500/045 (Plant Fire) are also referred to.

If the EFA is only in alarm, then the ARP directs the operators to OP/0/A/6400/002 C (Fire Detection System). Enclosure 4.1 (Fire Detection System Alarm/Trouble) provides instructions for acknowledging and resetting EFA alarms from the control room Fire Detection Terminal (EFAPCC). If unable to reset them from the control room, local resetting may be necessary. In some cases, local resetting is rather involved. This enclosure gives detailed guidance on locally resetting zones 207, 55, 153, 182 and 220.

Refer to current copies of OP/1/A/6100/010 N (Annunciator Response for Panel 1AD-13) and OP/0/A/6400/002 C (Fire Detection System) to address the associated objective(s).

1. Limits and Precautions

None

2. Initial Conditions

None

3. Procedure

☐ 3.1 **IF** EFA computer out of service **AND CANNOT** be immediately restarted, perform the following within 1 hour (SLC).

NOTE:	Steps 3.1.1 - 3.1.6 may be performed concurrently.

3.1.1 Initiate a continuous Fire Watch on the following:

☐ Zone 41 (Switchgear Room 1ETA and Switchgear AHU 1A & 1B Room (Room 803A))

☐ Zone 43 (Switchgear Room 2ETA and Switchgear AHU 2A & 2B Room (Room 805A))

☐ Any breached fire barriers

3.1.2 Check the following:

☐ DGPs / Zones listed in Table 4.1-1 (Local Monitoring Requirements)
☐ Unit 1 Annulus Detection Panel
☐ Unit 2 Annulus Detection Panel

☐ 3.1.3 **IF** any fire zone found in alarm, check affected zone locally.

NOTE:	Surveillance requirements for containment SLC fire zones are satisfied by monitoring containment temperatures as described below.

☐ 3.1.4 Monitor Upper Containment average temperature hourly.

☐ 3.1.5 Monitor Lower Containment weighted average temperature hourly.

☐ 3.1.6 **IF** fire verified in containment, manually actuate Containment Evacuation alarm.

NOTE:	The following step may be performed at any time it is needed.

3.2 Responding to EFA Computer lock up.

☐ 3.2.1 **IF** EFA Computer lock up occurs, perform the following:

☐ 3.2.1.1 Reboot computer.

☐ 3.2.1.2 **IF** the EFA computer has the OS2 operating system screen appearing in the foreground after booting completes, perform the following:

☐ A. Click the icon "Unity 5.8".

☐ B. Click to enlarge (in the upper right hand corner of the window).

☐ C. Sign on per Step 3.3.

☐ 3.3 **IF** required to sign on Fire Detection Terminal, perform the following:

☐ 3.3.1 Type OPS in User Name slot.

☐ 3.3.2 Depress "TAB" key on keyboard.

☐ 3.3.3 Type password OPSX.

☐ 3.3.4 To complete sign on select "Log On" or depress "Enter" on keyboard.

☐ 3.3.5 **WHEN** a system status tree appears, single click on MNS FD System (EFA).

NOTE:

- Tree navigation accomplished by clicking on arrows at upper left of screen.
- **IF** one zone is in alarm/trouble, additional alarms will **NOT** announce unless the "1AD-13 Reset" pushbutton is depressed.
- **IF** more than one zone is in "Alarm/Trouble", an alarm will announce until all have been acknowledged.
- Alarm summary screen only reflects conditions that existed when screen was called up. Screen does **NOT** continually update.
- The following options are available to respond to alarms:
  - F-1 "Help"
  - F-2 "Graphic Menu" - Displays MNS FD System (EFA) screen
  - F-5 "Point Command" - Displays alarm reset window, must know point number
  - F-9 "Ack Graphic" - Displays associated graphic if one exists
  - F-11 "Ack Message" - Displays action message if one exists
  - F-12 "Ack Alarm" - Alarm message will no longer be displayed but will be printed out
  - Esc key - Removes display of current alarm

3.4 Acknowledging an Alarm

☐ 3.4.1 **IF** fire or trouble alarm(s) in Zones 134 through 182, perform the following:

☐ 3.4.1.1 From menu bar, click "Systems".

☐ 3.4.1.2 From "System" drop down menu, click on "EST3 # 1".

☐ 3.4.1.3 From "EST3 # 1" sub menu, click "Commands".

☐ 3.4.1.4 From "EST3 # 1 System Command" dialog box, select "Network Panel Mask".

☐ 3.4.1.5 From "Network Panel Mask Command" dialog box, click applicable panel.

☐ 3.4.1.6 Perform one of the following to switch from "no" to "yes" to allow command reception:

☐ Double click on applicable panel line to switch from "no" to "yes"

OR

☐ Highlight applicable panel line and toggle from "no" to "yes"

☐ 3.4.1.7 From "Network Panel Mask Command" dialog box, select "Panel Sil".

☐ 3.4.1.8 **WHEN** "Request Completed" message box appears, click "OK".

☐ 3.4.1.9 From "Network Panel Mask Command" dialog box, select "Reset".

☐ 3.4.1.10 **WHEN** "Request Completed" message box appears, click "OK".

☐ 3.4.1.11 Click "Quit" on "Network Panel Mask Command" dialog box to close dialog box.

☐ 3.4.1.12 **IF** alarms will **NOT** acknowledge/silence, notify IAE.

_____ _____/_____
Person Notified Date Time

☐ 3.4.2 **IF** alarm in Zone 201, perform the following:

☐ 3.4.2.1 Dispatch operator to panel 0EFADP9530 (located beside DGP 23).

☐ 3.4.2.2 At panel 0EFADP9530 perform the following:

☐ A. Press Alarm Silence

☐ B. Press Reset

☐ 3.4.2.3 **IF** alarm clears, notify Control Room to continue at Step 3.4.3.

☐ 3.4.2.4 **IF** alarm is valid, notify control room to call out fire brigade.

☐ 3.4.2.5 **IF** alarm is invalid **AND** will not reset, perform the following:

☐ A. Clear Control Room "FIRE DET SYS ALERT" alarm by depressing "1AD13 RESET" pushbutton on control panel.

☐ B. Ensure Work Request initiated.

☐ C. **IF** no other alarms are present, exit this procedure.

☐ 3.4.3 Press "F12" key.

☐ 3.4.4 Select "Ack" in "Acknowledge Alarm Box" or depress "Enter" for each alarm.

☐ 3.4.5 **WHEN** all alarms have been acknowledged, click "QUIT" or "Esc".

☐ 3.4.6 Press F9 to navigate directly to DGP in alarm.

☐ 3.4.6.1 Select point marked "RES" for each DGP needing reset.

☐ 3.4.6.2 Select "ON" in "Point Command Box".

☐ 3.4.6.3 **WHEN** alarm reset, click "QUIT" or "Esc".

☐ 3.4.7 **IF** alarms cleared, perform the following:

☐ 3.4.7.1 Click "Misc" tab.

☐ 3.4.7.2 Click "Clear Alarms".

☐ 3.4.7.3 Check alarms cleared from bottom screen display.

☐ 3.4.8 Clear Control Room "FIRE DET SYS ALERT" alarm by depressing "1AD13 RESET" pushbutton on control panel.

☐ 3.4.9 **IF** unable to reset alarm, perform the following:

NOTE:	All alarms inside Containment should be able to be reset from the EFA computer, otherwise additional problems are indicated by this and I&E investigation is required.

☐ 3.4.9.1 **IF** alarm is in Containment, notify I&E to investigate alarm.

☐ 3.4.9.2 **IF** fire **OR** trouble alarm(s) in Zone 48, perform the following:

NOTE:	Alarm module in the next step is located inside door on back side of panel directly behind the EFA computer labeled "ANN. CIRCUITS".

☐ A. **IF** message appears on alarm module screen, reference the message.

☐ B. Depress "Reset".

☐ C. **IF** Alarm does **NOT** reset, perform the following:

☐ 1. Depress "Alarm Silence" or "Panel Silence" as necessary to silence alarm.

☐ 2. Continue at Step 3.12.

☐ D. Check alarm clears on Zone 48 on EFA Computer.

☐ E. **IF** this is the only alarm requiring attention, exit this Enclosure.

☐ 3.4.9.3 Dispatch operator to affected area to investigate.

☐ 3.4.9.4 Refer to Enclosure 4.2 (Fire Detection System - Fire Zone Data) for SLC considerations.

☐ 3.4.9.5 **IF** fire verified in containment, manually actuate Containment Evacuation alarm.

☐ 3.4.9.6 **IF** necessary to place local RF system alarm bells/horn in ack/off, maintain configuration control with a CCC Card or R&R.

☐ 3.4.9.7 **IF** unable to reset either of the following zones, initiate a continuous Fire Watch for affected zone(s).

- ☐ Zone 41 (Switchgear Room 1ETA and Switchgear AHU 1A & 1B Room (Room 803A)) {PIP M-03-02588}
- ☐ Zone 43 (Switchgear Room 2ETA and Switchgear AHU 2A & 2B Room (Room 805A)) {PIP M-03-02588}

☐ 3.4.9.8 **IF** unable to reset any of the following zones, perform applicable section:

- ☐ Zone 207, Section 3.5 (Responding to Zone 207 (DGP 46) alarm)
- ☐ Zone 55, Section 3.6 (Responding to Zone 55 (DGP 47) alarm)
- ☐ Zone 153, Section 3.7 (Responding to Zone 153 (DGP 32) alarms)
- ☐ Zone 182, Section 3.8 (Responding to Zone 182 (DGP 42) alarms)
- ☐ Zone 220, Section 3.9 (Responding to Zone 220 (DGP 49) alarm)
- ☐ Zone 218, Section 3.10 (Responding to Zone 218 (DGP 49) alarm)
- ☐ Zone 47, Section 3.11 (Responding to Zone 47 (DGP 45) alarm)

3.5 Responding to Zone 207 (DGP 46) alarm

☐ 3.5.1 Dispatch NLO to Telecommunication Room in Canteen with key #164.

☐ 3.5.2 Determine which subzones are in alarm at local panel.

☐ 3.5.3 Acknowledge subzone(s) alarm on DGP 46.

☐ 3.5.4 Check alarm clears on Zone 207 on EFA Computer.

NOTE: A fire alarm shuts down the ventilation fan for the affected subzone.

☐ 3.5.5 **IF** unable to reset invalid alarm, evaluate re-starting ventilation fans for affected subzone by placing affected subzones AHU Fire Detector Interlock Switch in "OFF" position. (DGP 46)

NOTE: An alarm on subzone 207-J shuts the elevator down. Selecting "OFF" on individual toggle switches gives a trouble alarm on Zone 207. These switches located on DGP 46.

☐ 3.5.6 **IF** required, silence alarm horns for any of three areas (Canteen, Whse #2 and 2nd floor) by selecting "OFF" on individual toggle switches.

☐ 3.5.7 **IF** alarm is valid, notify Control Room to call out Fire Brigade.

☐ 3.5.8 **IF** sprinklers are actuated, reset the Sprinkler Alarm Check Valve(s) per OP/1/A/6400/002 A. This will allow Zone 207K to clear.

☐ 3.5.9 **WHEN** subzone alarm cleared, check affected area ventilation fan restarts.

3.6 Responding to Zone 55 (DGP 47) alarm

NOTE: Zone 55 subzones 55A-55G are located on DGP 47. DGP 47 is then routed through DGP 45. All zone 55 alarms will be acknowledged at DGP 47.

☐ 3.6.1 Dispatch an operator to DGP 47. (Over IAE shop at SMXZ)

☐ 3.6.2 Determine which subzone(s) in alarm at DGP 47.

☐ 3.6.3 Acknowledge subzone(s) alarm on DGP 47.

☐ 3.6.4 Check alarm clears on Zone 55 on EFA Computer.

☐ 3.6.5 **IF** alarm valid, notify Control Room to call out Fire Brigade.

3.7 Responding to Zone 153 (DGP 32) alarms

☐ 3.7.1 Dispatch an operator to Annulus Fire Detection Control Panel (located outside Unit 1 lower air lock) to identify location of annulus alarm.

NOTE: "AC Failure" is normally dimly lit. **IF** actual "AC Failure" occurs, the light would be bright.

☐ 3.7.2 Depress "ACKNOWLEDGE" to silence audible alarm.

☐ 3.7.3 Reset alarm with "SYSTEM RESET".

☐ 3.7.4 Check alarm for Zone 153 clears on EFA Computer.

☐ 3.7.5 **IF** "DETECTION TROUBLE" light lit for affected zone, notify IAE.

☐ 3.7.6 **IF** unable to clear alarm, perform the following:

☐ Check "PREALARM" and "ALARM" lights lit for location in alarm
☐ Within 1 hour make a 360° tour of the annulus to inspect for signs of fire (Access upper level of annulus at door 1200A)

☐ 3.7.6.1 **IF** operator tour verifies no fire, maintain an hourly fire watch to document the following:

☐ No new fire zones in alarm on EFA computer
☐ Any zone in alarm has at least one operable adjacent zone (See Enclosure 4.6 for detector zones and adjacent zones)

☐ 3.7.6.2 **IF** any zone in alarm does **NOT** have at least one adjacent zone operable, conduct a 360° tour of upper annulus every 8 hours and log. (Hourly fire watch can be discontinued while 8 hour fire round being conducted)

3.8 Responding to Zone 182 (DGP 42) alarms

☐ 3.8.1 Dispatch an operator to Annulus Fire Detection Control Panel (located outside Unit 2 lower air lock) to identify location of annulus alarm.

NOTE: "AC Failure" is normally dimly lit. **IF** actual "AC Failure" occurs, the light would be bright.

☐ 3.8.2 Depress "ACKNOWLEDGE" to silence audible alarm.

☐ 3.8.3 Reset alarm with "SYSTEM RESET".

☐ 3.8.4 Check alarm for Zone 182 clears on EFA Computer.

☐ 3.8.5 **IF** "DETECTION TROUBLE" light lit for the affected zone, notify IAE.

☐ 3.8.6 **IF** unable to clear alarm, perform the following:

☐ Check "PREALARM" and "ALARM" lights lit for location in alarm
☐ Within 1 hour make a 360° tour of the annulus to inspect for signs of fire (Access upper level of annulus at door 1200A)

☐ 3.8.6.1 **IF** no fire noted by operator tour, maintain an hourly fire watch to document the following:

☐ No new fire zones in alarm on EFA computer
☐ Any zone in alarm has at least one operable adjacent zone (See Enclosure 4.6 for detector zones and adjacent zones)

☐ 3.8.6.2 **IF** any zone in alarm does **NOT** have at least one adjacent zone operable, conduct a 360° tour of upper annulus every 8 hours and log. (Hourly fire watch can be discontinued while 8 hour fire round being conducted)

3.9 Responding to Zone 220 (DGP 49) alarm

NOTE:
- NAB Fire Control Panel receives power from Panelboard L1-20 with L1. (NAB 1000-14 Electrical Equipment Room)
- DGP 49 receives power from Panelboard 1L-13 with 1L. (OSF Electrical Room at Conference Room 104A)

☐ 3.9.1 Dispatch Operator to NAB Fire Control Panel. (North end center of NAB).

NOTE: NAB Fire Control Panel consists of 4 subzones:

- Zone 1 Smoke Detectors
- Zone 2 HVAC area smoke detectors
- Zone 3 Halon (Room NAB 1096)
- Zone 4 Sprinklers (NAB Copy Room at N W Corner of NAB)

☐ 3.9.2 **IF** alarm valid, notify Control Room to call out Fire Brigade.

3.9.3 Acknowledge alarm/trouble for Zones 1, 2 and 4, as follows:

☐ 3.9.3.1 Depress "ACK".

☐ 3.9.3.2 Depress "System Reset".

☐ 3.9.4 **IF** unable to reset invalid alarm, notify IAE.

_____ _____/_____
Person Notified Date Time

☐ 3.9.5 **IF** alarm/trouble in Zone 3 (Halon), perform the following:

☐ 3.9.5.1 Go to room NAB 1096 (Halon Storage).

☐ 3.9.5.2 Reset with "System Reset" on the local panel.

3.9.6 Perform the following at NAB Fire Control Panel:

☐ 3.9.6.1 Depress "ACK".

☐ 3.9.6.2 Depress "System Reset".

☐ 3.9.7 **IF** unable to reset invalid alarm, notify IAE.

_____ _____/_____
Person Notified Date Time

NOTE:	Operating procedure for DGP 49 is located inside of the panel door on a metal plate.

☐ 3.9.8 Acknowledge alarm/trouble on DGP 49 (located 760 Inside West Side Door of the OSF).

☐ 3.9.9 Check alarm clears on EFA Computer.

3.10 Responding to Zone 218 (DGP 49) alarm

NOTE:	Operating procedure for DGP 49 is located inside of the panel door on a metal plate.

☐ 3.10.1 Acknowledge alarm/trouble on DGP 49 (located 760 Inside West Side Door of the OSF).

☐ 3.10.2 Check alarm clears on EFA Computer.

3.11 Responding to Zone 47 (DGP 45) alarm

☐ 3.11.1 Dispatch NLO to panel located beside AHU for Unit 1 6.9 KV Switchgear Room with key #230.

☐ 3.11.2 Determine which subzones are in alarm at local panel.

☐ 3.11.3 **IF** subzones do not indicate an alarm, check each subzone locally, for fire.

☐ 3.11.4 **IF** alarm valid, notify Control Room to call out Fire Brigade.

☐ 3.11.5 Using key 230 acknowledge/reset subzone(s) alarm.

☐ 3.11.6 Check alarm clears on Zone 47/DGP 45 on EFA Computer.

3.12 Responding to Zone 48 alarm

NOTE:	Zone 48 reset panel is located in the phone room (room 112, in admin building) Key # 44 provides access.

☐ 3.12.1 Obtain key # 44.

☐ 3.12.2 At the local panel, determine which area is in alarm.

☐ 3.12.3 **IF** alarm valid, notify Control Room to call out Fire Brigade.

☐ 3.12.4 Depress "Reset".

☐ 3.12.5 **IF** Alarm does **NOT** reset, depress "Alarm Silence" or "Panel Silence" as necessary to silence alarm.

☐ 3.12.6 Check alarm clears on Zone 48 on EFA Computer.

Table 4.1-1. Local Monitoring Requirements

DGP	Zones Monitored	Location
21	126, 127, 132, 133	Aux 775 QQ-54
20	122, 123, 131	Aux 767 JJ-60
18	113, 114, 115	Aux 767 JJ-52
19	116, 120, 121	Aux 767 MM-56
23	125, 199, 200, 201	Aux 760 PP-61
16	109, 110, 111	Aux 750 LL-58
15	107, 112, 198	Aux 750 JJ-58
14	103, 105, 130	Aux 750 LL-54
13	104, 106, 108, 197	Aux 750 JJ-54
42	182A - 182F	Outside Unit 2 Lower Air Lock
45	45A - 45H	Service Bldg 750 Cable Spreading Room
32	153A - 153F	Outside Unit 1 Lower Air Lock
22	192, 202, 206	Service Bldg 750 Cable Spreading Rm behind DGP 45
12	99, 100, 101, 129	Aux 733 JJ-58
11	97, 98, 102	Aux 733 GG-59
10	92, 93, 94, 205	Aux 733 JJ-54
9	91, 95, 96	Aux 733 GG-53
8	87, 128	Aux 716 JJ-60
7	83, 85, 88, 90	Aux 716 HH, JJ-60
6	81, 82, 84, 86	Aux 716 HH-57
5	70, 74, 203, 204	Aux 716 JJ-52
4	75, 77, 79, 80	Aux 716 HH, JJ-52
3	72, 73, 76, 78	Aux 716 HH-55
2	66 - 69	Aux 716 FF-54,55
1	61 - 64	Aux 716 FF-57,58

Table continued next page

Table 4.1-1. Local Monitoring Requirements

DGP	Zone	Area Serviced	Location for Fire Watch
45	34	Unit 2 MG Set Room	Unit 2 MG Set Room 767 CC-61
	40	Control Room	Control Room CC-56
	30	Unit 1 MG Set Room	Unit 1 MG Set Room 767 CC-51
	50	1B D/G Room	Aux 733 BB-43
	37	1A D/G Room	Aux 733 CC-43
	51	2B D/G Room	Aux 733 BB-69
	38	2A D/G Room	Aux 733 CC-69
	29	Unit 1 Aux Bldg Vent	Aux 767 KK-52/53
	33	Unit 2 Aux Bldg Vent	Aux 767 KK-59/60
	39	Unit 1 Cable Room	Aux 750 CC-55
	52	Unit 2 Cable Room	Aux 750 CC-57
	35	Unit 2 Electrical Pen 750	Aux 750 CC-61
	43	Switchgear Room 2ETA and Switchgear AHU 2A & 2B Room (Room 805A)	Aux 750 AA-62
	36	Unit 2 Electrical Pen 733	Aux 733 CC-61
	44	2ETB Switchgear	Aux 733 AA-62
	32	Unit 1 Electrical Pen 733	Aux 733 CC-51
	42	1ETB Switchgear	Aux 733 AA-49
	31	Unit 1 Electrical Pen 750	Aux 750 CC-51
	41	Switchgear Room 1ETA and Switchgear AHU 1A & 1B Room (Room 803A)	Aux 750 AA-49

End of Enclosure

Examination Outline Cross-reference:	Level	RO	SRO
	Tier #	1	
	Group #	1	
	K/A #	007 EK1.04	
	Importance Rating	3.6	

Knowledge of the operational implications of the following concepts as they apply to the reactor trip: Decrease in reactor power following reactor trip (prompt drop and subsequent decay)

Proposed Question: Common 39

A reactor trip has occurred from 100% power.

Which ONE (1) of the following describes (1) the MINIMUM time that it takes for the Source Range instruments to energize, and (2) the likely reason that Source Range instruments do NOT energize when required?

A. (1) 5 - 10 minutes
(2) Undercompensated Intermediate Range

B. (1) 5 - 10 minutes
(2) Overcompensated Intermediate Range

C. (1) 11 - 15 minutes
(2) Undercompensated Intermediate Range

D. (1) 11 – 15 minutes
(2) Overcompensated Intermediate Range

Proposed Answer: C

Explanation (Optional):

A is incorrect. Time is too short. With prompt drop to about 5% power and negative 1/3 DPM thereafter, it should take about 13-15 minutes to get to the source range from 100%

B is incorrect. Same as A above, except that an overcompensated channel would cause one input to SR energization to be active earlier, not later than required. Credible because there is a common misconception about the behavior of IR compensation, and the applicant must know the actuation logic for energizing SR instruments.

C is Correct.

D is incorrect. Correct time, but incorrect compensation.

Technical Reference(s): IC-ENB, pg 78 (Attach if not previously provided)
BNT-RT03, pg 32, 33

Proposed references to be provided to applicants during examination: None

Learning Objective: IC-ENB-7 (As available)

Question Source: Bank # _____
Modified Bank # _____ (Note changes or attach parent)
New X

Question History: Last NRC Exam _____

Question Cognitive Level: Memory or Fundamental Knowledge _____
Comprehension or Analysis X

10 CFR Part 55 Content: 55.41 5
55.43 _____

Comments:

CLASSROOM TIME (Hours)

NLO	NLOR	LPRO	LPSO	LOR
	2.0	3.0	3.0	2.0

OBJECTIVES

	OBJECTIVE	NLO	NLOR	LPRO	LPSO	LOR
1	State the purpose of the Nuclear Instrumentation System.		X	X	X	
2	Explain why it is necessary to use three ranges of Excore Nuclear Instrumentation.		X	X	X	
3	Explain the operation of the detector used in each range of instrumentation.		X	X	X	
4	Sketch the outputs of each range of Nuclear Instrumentation, to include all indication, control and protective circuits.		X	X	X	
5	Explain why gamma compensation is necessary in the Source Range and Intermediate Range but not in the Power Range.		X	X	X	
6	Describe the methods of gamma compensation used by the Source and Intermediate Ranges.		X	X	X	
7	Describe the effects of 'over' and 'under' compensation on the Intermediate Range.		X	X	X	
8	Explain the functions of the control switches for each range of Nuclear Instrumentation.		X	X	X	X
9	Concerning the channel current comparator and detector current comparator:					
	• Explain the function of each.		X	X	X	
	• List the alarm setpoints for each.		X	X	X	X
10	Explain the functions of all related bypass and block switches on the Nuclear Instrumentation miscellaneous panels.		X	X	X	X
11	List the Reactor Trips associated with the Nuclear Instrumentation System. (Include setpoints, logic and interlocks)		X	X	X	X

2.2.2 Over Compensation And Under Compensation

Objective # 7

Reference **Figure 7.7**. With the inner chamber voltage set properly, inner chamber gamma current will exactly match outer chamber gamma current and the two will cancel leaving only the neutron current. With inner chamber voltage set too high, inner chamber current will exceed outer chamber gamma current canceling all gamma current plus some of the neutron current. This is "over-compensation". The following are consequences of **over-compensation**:

- The indicated power level will read lower than the actual power level.
- The intermediate range instrument will "come on scale" at a higher source range level producing less overlap between the two ranges.
- During startup, the P-6 permissive will be received later, at a higher actual neutron flux level and the source range will be closer to the 10^5 cps, Hi Level Trip setpoint.
- After a Reactor Trip, power will decay to the P-6 reset sooner than normal.
- Initially, indicated SUR will be higher than actual SUR.

The effects of improper compensation are much more pronounced at low power and become a non-factor prior to taking critical data at 10^{-8} amps.

With inner chamber voltage set too low, inner chamber current will be less than outer chamber gamma current, canceling only a portion of the gamma current. This is "under-compensation". The following are consequences of **under-compensation**:

- The indicated power level will read higher than the actual power level.
- The intermediate range instrument will "come on scale" at a lower source range level producing more overlap between the two ranges.
- During startup, the P-6 permissive will be received earlier, at a lower actual neutron flux level.
- After a Reactor Trip, power will decay to the P-6 reset later than normal and may prevent automatic re-energizing of the source range detectors.
- Initially, indicated SUR will be lower than actual SUR.

2.2.3 Intermediate Range Circuitry

Objective # 4

Reference **Figure 7.8**. The Intermediate Range should normally start to indicate power at a Source Range power level of 10^3 cps and the Source Range should be blocked by the time level is 10^4 cps and Intermediate level is at 10^{-10} amps. The indicating range for the Intermediate Range instrument is 10^{-11} to 10^{-3} amps, which overlaps the entire power range.

The current flow from the intermediate range detectors is too low to be used directly for control purposes so the output feeds a log level amplifier (log amp) for conversion to a usable voltage. The log level amplifier also converts the detector signal to a logarithmic output and drives the bistables, indicators and other circuits.

Bistable Relay Drivers provide the "**P-6 Permissive**," the "**Low Power Rod Stop**" and the "**Reactor Trip**" whenever the intermediate range amps exceed the setpoint. An isolation amplifier feeds the OAC, SUR Circuitry, Control Board Meter, and the NR-45 Chart Recorder.

2.2.4 Intermediate Range Outputs

Both Intermediate range channels read out on the Control Board with a range of 10^{-11} to 10^{-3} amps. The Intermediate Range level can be monitored on the NR-45 Control Room Chart Recorder. In addition to counts per second, Intermediate Range Start-Up Rate (SUR) is indicated for each channel in decades per minute (-0.5 to 5.0 DPM).

The **P-6 Source Range Block Permissive** actuates when **"1-out-of-2" (1/2) IR channels exceeds 10^{-10} amps**.

The **Low Power Rod Stop** prevents outward motion of the rods in Auto and Manual when **1/2 IR channels exceeds amps equivalent to 20% reactor power**.

The **Low Power Reactor Trip** protects the core from startup accidents when **1/2 IR channels exceeds amps equivalent to 25% reactor power**.

2.2.5 Intermediate Range Drawer Panel (Reference **Figure 7.9**).

Objective # 8

Ampere Neutron Level Meter - Indicates current output of detector in amps with a range of eight decades (10^{-11} to 10^{-3} amps)

Instrument Power "ON" Lamp - 118 volt AC instrument power is applied to drawer.

Control Power "ON" Lamp - 118 volt AC control power is applied to driver assembly control circuits.

Channel On Test Lamp - Indicates Operation Selector switch is in a position other than "NORMAL".

Level Trip Bypass Lamp - Indicates Level Trip switch in "BYPASS" position.

High Level Trip Lamp - ON when neutron flux in IR exceeds current equivalent to 25% full power. (Approximately 5.5×10^{-5} amp).

High Level Rod Stop lamp - ON when IR current equivalent to 20% full power.

Power Above Permissive P-6 Lamp - Lights when IR reaches 10^{-10} amps. **Allows blocking Source Range Instruments**.

Loss of Detector Volt Lamp - Indicates low or loss of high voltage to detector.

Loss of Comp. Volt Lamp - Indicates loss of compensating voltage to detector.

AC Inst. Power Fuses - Overcurrent protection for instrument power.

AC Control Power Fuses - Overcurrent protection for control power.

NOTE (Reference **Figure 7.21**): If either instrument or control power fuses are removed, the bistables will trip. Level Trip Bypass will prevent bistable trip for Instrument Power fuses only.

7.2 Operating Ranges (01/09/02)

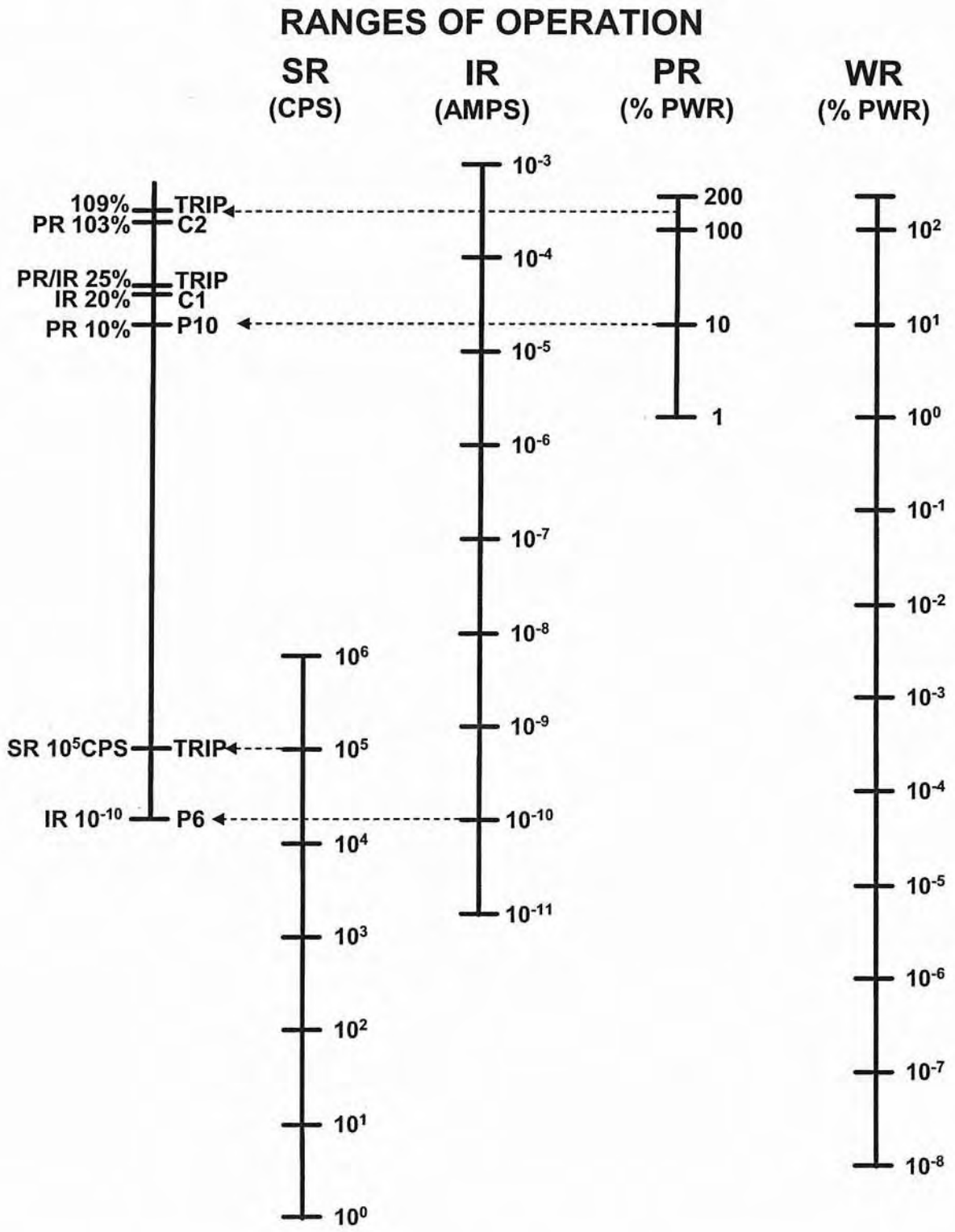

Objective 19

5.6.3 POST-TRIP BEHAVIOR

The most observable response comes from a step addition of a large amount of negative reactivity, such as that occurring on a reactor trip (Figure 6). The reactor shows an immediate, large decrease in neutron level as the prompt neutron population decreases. This is called the "prompt drop" and results in a reduction of the neutron level to ≈ 5-6% of the pre-trip level.

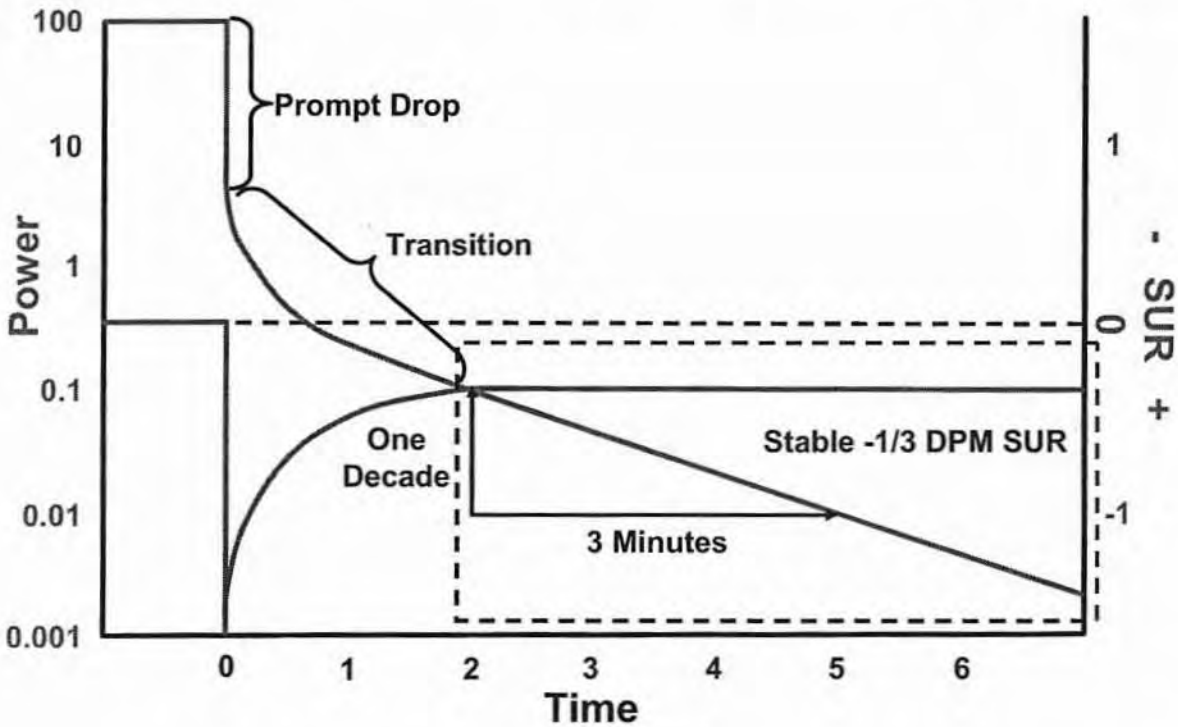

Figure 6 - Post-Trip Behavior of Power

A transition takes place as the delayed neutron production (based on the pre-trip fission rate initially) provides some contribution to the neutron level. Shorter lived precursors decay first, and then die out, until finally the neutron level becomes dependent on the decay of the longest-lived precursor group. This group has a half-life of ≈ 55 seconds with a decay constant of 0.0124 sec^{-1}. Since the neutron level is appearing principally from the decay of these precursors, the change in the neutron level (N/N_O) over an interval of time becomes:

$$\frac{N}{N_O} = e^{-\lambda t}$$

Equation 14

If we solve for the change over a 3 minute interval, we determine the result to be 0.1. That is, the neutron level decreases by a factor of 10 (a one decade decrease) in 3 minutes. This -1/3

dpm SUR indication is a characteristic that we expect to see any time the reactor is made sufficiently subcritical and kept that way for an extended period of time (20 minutes or more).

5.6.4 EFFECT OF THE RATE OF NEGATIVE REACTIVITY ADDITION ON SUR

We have shown how SUR can be related to a stable core reactivity. Another application an operator must be familiar with is the response of SUR during times of changing reactivity. This is most pronounced during rod motion. Consider a routine reactor start-up with the reactor at 10^{-10} amps, Intermediate Range and $k_{eff} = 1.00$. The control rods are then withdrawn 10 steps to establish a positive SUR. At 10^{-8} amps the control rods are inserted 10 steps to return k_{eff} to 1.00. How will start-up rate respond to the rod withdrawal and subsequent insertion?

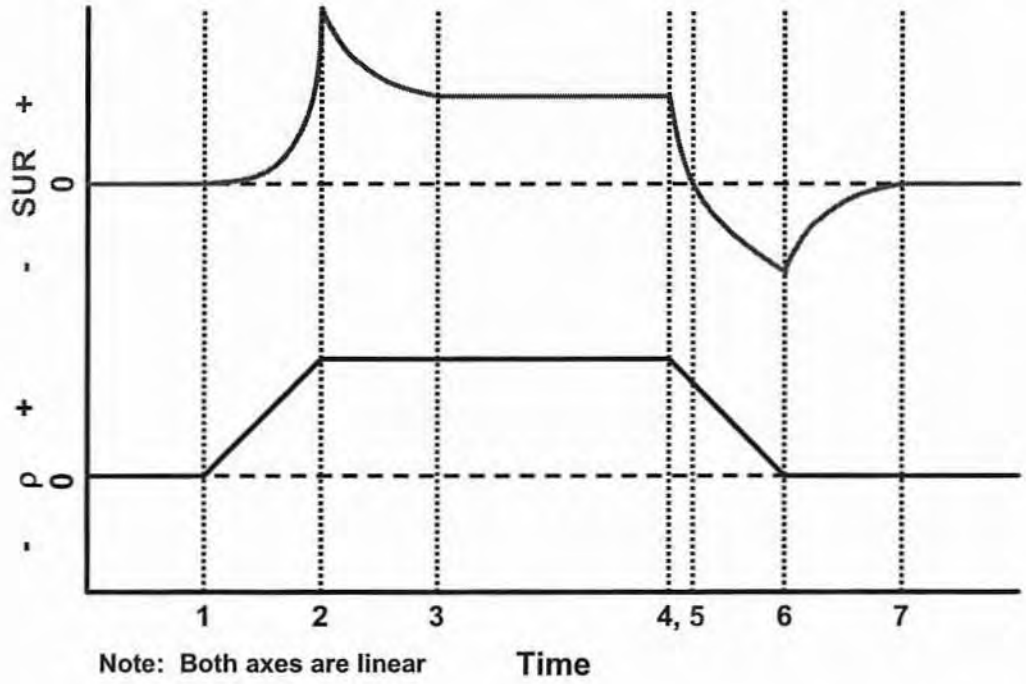

Figure 7 Control Rod Withdrawal Followed by Control Rod Insertion

Figure 7 depicts the response of the reactor to the changes in reactivity.

1. Prior to time 1, the reactor was critical. From time 1 to time 2 the control rods are withdrawn. SUR immediately starts increasing as the prompt neutron population increases. The contribution of delayed neutrons slows the change in start-up rate as the longer lived precursor groups slowly build up trying to keep up with the increasing fission rate. The result is a constantly increasing SUR. (Note that if the positive reactivity in the core were to increase to a point where $\rho = \overline{\beta}_{eff}$, the reactor would be prompt critical and the SUR would approach infinity.)

2. At time 2 rod withdrawal is halted. The prompt neutron population essentially stabilizes and the SUR ceases to rise. However, SUR does NOT remain constant! The concentrations of the longer lived delayed neutron precursor groups are not at their equilibrium values while the shorter lived precursors are very close to their equilibrium

Examination Outline Cross-reference:	Level	RO	SRO
	Tier #	1	
	Group #	1	
	K/A #	008 G2.2.22	
	Importance Rating	3.4	

Equipment Control Knowledge of limiting conditions for operations and safety limits.

Proposed Question: Common 40

With Unit 1 at 80% power, a PZR PORV is stuck open.

Which ONE (1) of the following correctly describes the technical specification parameters or limits that will be adversely affected?

A. Departure From Nucleate Boiling Ratio and OT Delta T setpoint

B. Departure From Nucleate Boiling Ratio and OP Delta T setpoint

C. NC System Pressure Safety Limit and OT Delta T setpoint

D. NC System Pressure Safety Limit and OP Delta T setpoint

Proposed Answer: A

Explanation (Optional):
A is correct. Both limits or setpoints have an NCS pressure input
B is incorrect because OPDT Setpoint pressure input is zeroed out
C is incorrect because NC System pressure safety limit is what the PORV protects against. If it is open, there is more margin with pressure decreasing
D is incorrect because OPDT Setpoint pressure input is zeroed out

Technical Reference(s): TS Basis 3.4.1 and 3.3.1 (Attach if not previously provided)

Proposed references to be provided to applicants during examination: None

Learning Objective: IC-IPE, obj 14 (As available)
PS-IPE, obj 13

Question Source:	Bank #		
	Modified Bank #		(Note changes or attach parent)
	New	X	
Question History:	Last NRC Exam		
Question Cognitive Level:	Memory or Fundamental Knowledge		
	Comprehension or Analysis	X	
10 CFR Part 55 Content:	55.41	10	
	55.43	2	

Comments:

SEQ	OBJECTIVE	NLO	NLOR	LPRO	LPSO	LOR
14	Concerning the Technical Specifications related to the Reactor Protection System;					
	• Given the LCO title, state the LCO (including any COLR values) and applicability.			X	X	X
	• For any LCO's that have action required within one hour, state the action.			X	X	X
	• Given a set of parameter values or system conditions, determine if any Tech Spec LCO's is (are) not met and any action(s) required within one hour.			X	X	X
	• Given a set of plant parameters or system conditions and the appropriate Tech Specs, determine required action(s).			X	X	X
	• Discuss the basis for a given Tech Spec LCO or Safety Limit.				X	*
	* SRO Only ICIPE014					

10.	Describe all alarms, control functions, and interlocks generated by pressurizer pressure which are not controlled by the Pressurizer Master Controller (include setpoints).		X	X	X	X
11.	Describe the protection (signals, setpoints, permissives) associated with Pressurizer pressure (logic not required).		X	X	X	X
12.	For any Pressurizer Pressure Control System input signal failure, determine the effect and evaluate operator action to be taken.			X	X	X
13.	Concerning the Technical Specifications related to the Pressurizer Pressure Control System:					
	• Given the LCO title, state the LCO (including any COLR values) and applicability.			X	X	X
	• For any LCO's that have action required within one hour, state the action.			X	X	X
	• Given a set of parameter values or system conditions, determine if any Tech. Spec. LCO's is (are) not met and any action(s) required within one hour.			X	X	X
	• Given a set of parameters or system conditions and the appropriate Tech Spec, determine the required action(s)			X	X	X
	• Discuss the bases for a given Tech. Spec. LCO or Safety Limit *** SRO ONLY**				X	*

BASES

APPLICABLE SAFETY ANALYSES, LCO, and APPLICABILITY (continued)

Dynamic compensation is included for system piping delays from the core to the temperature measurement system.

The Overtemperature ΔT trip Function is calculated for each loop as described in Note 1 of Table 3.3.1-1. Trip occurs if Overtemperature ΔT is indicated in two loops. The pressure and temperature signals are used for other control functions, therefore, the actuation logic must be able to withstand an input failure to the control system, which may then require the protection function actuation, and a single failure in the other channels providing the protection function actuation. Note that this Function also provides a signal to generate a turbine runback prior to reaching the Trip Setpoint. A turbine runback will reduce turbine power and reactor power. A reduction in power will normally alleviate the Overtemperature ΔT condition and may prevent a reactor trip.

The LCO requires all four channels of the Overtemperature ΔT trip Function to be OPERABLE. Note that the Overtemperature ΔT Function receives input from channels shared with other RTS Functions. Failures that affect multiple Functions require entry into the Conditions applicable to all affected Functions.

In MODE 1 or 2, the Overtemperature ΔT trip must be OPERABLE to prevent DNB. In MODE 3, 4, 5, or 6, this trip Function does not have to be OPERABLE because the reactor is not operating and there is insufficient heat production to be concerned about DNB.

7. Overpower ΔT

The Overpower ΔT trip Function ensures that protection is provided to ensure the integrity of the fuel (i.e., no fuel pellet melting and less than 1% cladding strain) under all possible overpower conditions. This trip Function also limits the required range of the Overtemperature ΔT trip Function and provides a backup to the Power Range Neutron Flux—High Setpoint trip. The Overpower ΔT trip Function ensures that the allowable heat generation rate (kW/ft) of the fuel is not exceeded. It uses the ΔT of each loop as a measure of reactor power with a setpoint that is automatically varied with the following parameters:

BASES

APPLICABLE SAFETY ANALYSES, LCO, and APPLICABILITY (continued)

- reactor coolant average temperature—the Trip Setpoint is varied to correct for changes in coolant density and specific heat capacity with changes in coolant temperature; and

- rate of change of reactor coolant average temperature—including dynamic compensation for the delays between the core and the temperature measurement system.

The Overpower ΔT trip Function is calculated for each loop as per Note 2 of Table 3.3.1-1. Trip occurs if Overpower ΔT is indicated in two loops. The temperature signals are used for other control functions, therefore, the actuation logic must be able to withstand an input failure to the control system, which may then require the protection function actuation, and a single failure in the remaining channels providing the protection function actuation. Note that this Function also provides a signal to generate a turbine runback prior to reaching the Trip Setpoint. A turbine runback will reduce turbine power and reactor power. A reduction in power will normally alleviate the Overpower ΔT condition and may prevent a reactor trip.

The LCO requires four channels of the Overpower ΔT trip Function to be OPERABLE. Note that the Overpower ΔT trip Function receives input from channels shared with other RTS Functions. Failures that affect multiple Functions require entry into the Conditions applicable to all affected Functions.

In MODE 1 or 2, the Overpower ΔT trip Function must be OPERABLE. These are the only times that enough heat is generated in the fuel to be concerned about the heat generation rates and overheating of the fuel. In MODE 3, 4, 5, or 6, this trip Function does not have to be OPERABLE because the reactor is not operating and there is insufficient heat production to be concerned about fuel overheating and fuel damage.

8. Pressurizer Pressure

The same sensors provide input to the Pressurizer Pressure—High and —Low trips and the Overtemperature ΔT trip. The Pressurizer Pressure channels are also used to provide input to the Pressurizer Pressure Control System, therefore, the actuation logic must be able to withstand an input failure to the control system, which may then require the protection function actuation, and a single failure in the other channels providing the protection function actuation.

B 3.4 REACTOR COOLANT SYSTEM (RCS)

B 3.4.1 RCS Pressure, Temperature, and Flow Departure from Nucleate Boiling (DNB) Limits

BASES

BACKGROUND

These Bases address requirements for maintaining RCS pressure, temperature, and flow rate within limits assumed in the safety analyses. The safety analyses (Ref. 1) of normal operating conditions and anticipated operational occurrences assume initial conditions within the normal steady state envelope. The limits placed on RCS pressure, temperature, and flow rate ensure that the minimum departure from nucleate boiling ratio (DNBR) will be met for each of the transients analyzed.

The RCS pressure limit is consistent with operation within the nominal operational envelope. Pressurizer pressure indications are averaged to come up with a value for comparison to the limit. A lower pressure will cause the reactor core to approach DNB limits.

The RCS coolant average temperature limit is consistent with full power operation within the nominal operational envelope. Indications of temperature are averaged to determine a value for comparison to the limit. A higher average temperature will cause the core to approach DNB limits.

The RCS volumetric flow rate normally remains constant during an operational fuel cycle with all pumps running. Flow rate indications are averaged within a loop and then summed among the four loops to come up with a value for comparison to the limit. A lower RCS flow will cause the core to approach DNB limits. RCS flow rate may be slightly reduced provided THERMAL POWER is also reduced to ensure that the calculated DNBR will not be below the design DNBR value.

Operation outside these DNB limits increases the likelihood of a fuel cladding failure in a DNB limited event.

APPLICABLE SAFETY ANALYSES

The requirements of this LCO represent the initial conditions for transients analyzed in the plant safety analyses (Ref. 1). The safety analyses have shown that transients initiated from the limits of this LCO will result in meeting the acceptance criteria, including the DNBR criterion. This is the acceptance limit for the RCS DNB parameters. Changes to the unit that could impact these parameters must be

BASES

APPLICABLE SAFETY ANALYSES (continued)

assessed for their impact on the acceptance criteria. A key assumption for the analysis of these events is that the core power distribution is within the limits of LCO 3.1.6, "Control Bank Insertion Limits"; LCO 3.2.3, "AXIAL FLUX DIFFERENCE (AFD)"; and LCO 3.2.4, "QUADRANT POWER TILT RATIO (QPTR)."

The pressurizer pressure limits and the RCS average temperature limits specified in the COLR correspond to analytical limits used in the safety analyses, with allowance for measurement uncertainty.

The RCS DNB parameters satisfy Criterion 2 of 10 CFR 50.36 (Ref. 2).

LCO

This LCO specifies limits on the monitored process variables—pressurizer pressure, RCS average temperature, and RCS total flow rate—to ensure the core operates within the limits assumed in the safety analyses. The numerical limits of these variables are contained in the COLR to provide operating and analysis flexibility from cycle to cycle. However, the minimum RCS flow, based on previously analyzed maximum steam generator tube plugging, is retained in the TS LCO. Operating within these limits will result in meeting the acceptance criteria, including the DNBR criterion.

RCS total flow rate contains a measurement error based on the performance of past precision heat balances and using the result to calibrate the RCS flow rate indicators. Sets of elbow tap coefficients, as determined during these heat balances, were averaged for each elbow tap to provide a single set of elbow tap coefficients for use in calculating RCS flow. This set of coefficients establishes the calibration of the RCS flow rate indicators and becomes the set of elbow tap coefficients used for RCS flow measurement. Potential fouling of the feedwater venturi, which might not have been detected, could have biased the result from these past precision heat balances in a nonconservative manner. Therefore, a penalty for undetected fouling of the feedwater venturi raises the nominal flow measurement allowance for no fouling.

The numerical values for pressure and average temperature specified in the COLR are given for the measurement location with adjustments for the indication instruments.

APPLICABILITY

In MODE 1, the limits on pressurizer pressure, RCS coolant average temperature, and RCS flow rate must be maintained during steady state operation in order to ensure DNBR criteria will be met in the event of an unplanned loss of forced coolant flow or other DNB limited transient. In

BASES

APPLICABILITY (continued)

all other MODES, the power level is low enough that DNB is not a concern. A Note has been added to indicate the limit on pressurizer pressure is not applicable during short term operational transients such as a THERMAL POWER ramp increase > 5% RTP per minute or a THERMAL POWER step increase > 10% RTP. These conditions represent short term perturbations where actions to control pressure variations might be counterproductive. Also, since they represent transients initiated from power levels < 100% RTP, an increased DNBR margin exists to offset the temporary pressure variations.

The DNBR Limit is provided in SL 2.1.1, "Reactor Core SLs." The conditions which define the DNBR Limit are less restrictive than the limits of this LCO, but violation of a Safety Limit (SL) merits a stricter, more severe Required Action. Should a violation of this LCO occur, the operator must check whether or not an SL may have been exceeded.

ACTIONS

A.1

Pressurizer pressure and RCS average temperature are controllable and measurable parameters. With one or both of these parameters not within LCO limits, action must be taken to restore parameter(s).

The 2 hour Completion Time for restoration of the parameters provides sufficient time to adjust plant parameters, to determine the cause for the off normal condition, and to restore the readings within limits, and is based on plant operating experience.

B.1 and B.2

RCS total flow rate is not a controllable parameter and is not expected to vary during steady state operation. If the indicated RCS total flow rate is ≥ 99%, but < 100% of the limit specified in the COLR, then THERMAL POWER may not exceed 98% RTP. THERMAL POWER must be reduced within 2 hours. The completion time of 2 hours is consistent with Required Action A.1. In addition, the Power Range Neutron Flux - High Trip Setpoint must be reduced from the nominal setpoint by 2% RTP within 6 hours. The Completion Time of 6 hours to reset the trip setpoints recognizes that, with power reduced, the safety analysis assumptions are satisfied and there is no urgent need to reduce the trip setpoints. This is a sensitive operation that may inadvertently trip the Reactor Protection System.

BASES

ACTIONS (continued)

C.1, C.2.1, C.2.2, and C.2.3

If the indicated RCS total flow rate is less than 99% of the value specified in the COLR, then RCS total flow must be restored to greater than or equal to 99% of the value specified in the COLR within 2 hours or power must be reduced to less than 50% RTP. The Completion Time of 2 hours is consistent with Required Action A.1. If THERMAL POWER is reduced to less than 50% RTP, the Power Range Neutron Flux - High Trip Setpoint must also be reduced to ≤ 55% RTP. The Completion Time of 6 hours to reset the trip setpoints is consistent with Required Action B.2. This is a sensitive operation that may inadvertently trip the Reactor Protection System. Operation is permitted to continue provided the RCS total flow is restored to greater than or equal to 99% of the value specified in the COLR within 24 hours. The Completion Time of 24 hours is reasonable considering the increased margin to DNB at power levels below 50% and the fact that power increases associated with a transient are limited by the reduced trip setpoint.

D.1

If the Required Actions are not met within the associated Completion Time, the plant must be brought to a MODE in which the LCO does not apply. To achieve this status, the plant must be brought to at least MODE 2 within 6 hours. The Completion Time of 6 hours is reasonable to reach the required plant conditions in an orderly manner.

SURVEILLANCE REQUIREMENTS

SR 3.4.1.1

This surveillance demonstrates that the pressurizer pressure remains within the required limits. Alarms and other indications are available to alert operators if this limit is approached or exceeded. The frequency of 12 hours is sufficient, considering the other indications available to the operator in the control room for monitoring the RCS pressure and related equipment status. The 12 hour interval has been shown by operating practice to be sufficient to regularly assess for potential degradation and to verify operation is within safety analysis assumptions.

BASES

SURVEILLANCE REQUIREMENTS (continued)

SR 3.4.1.2

This surveillance demonstrates that the average RCS temperature remains within the required limits. Alarms and other indications are available to alert operators if this limit is approached or exceeded. The frequency of 12 hours is sufficient, considering the other indications available to the operator in the control room for monitoring the RCS. The 12 hour interval has been shown by operating practice to be sufficient to regularly assess for potential degradation and to verify operation is within safety analysis assumptions.

SR 3.4.1.3

This surveillance demonstrates that the RCS total flow rate remains within the required limits. Alarms and other indications are available to alert operators if this limit is approached or exceeded. The frequency of 12 hours is sufficient, considering the other indications available to the operator in the control room for monitoring the RCS flow rate and related equipment status (e.g. RCP voltage and frequency, etc.). The 12 hour interval has been shown by operating practice to be sufficient to regularly assess potential degradation and to verify operation within safety analysis assumptions.

SR 3.4.1.4

Calibration of the installed RCS flow instrumentation permits verification that the actual RCS flow rate is greater than or equal to the minimum required RCS flow rate.

The Frequency of 18 months is consistent with operating experience.

REFERENCES

1. UFSAR, Section 15.

2. 10 CFR 50.36, Technical Specifications, (c)(2)(ii).

Examination Outline Cross-reference:	Level	RO	SRO
	Tier #	1	
	Group #	1	
	K/A #	009 EK2.03	
	Importance Rating	3.0	

Knowledge of the interrelations between the small break LOCA and the following: S/Gs

Proposed Question: Common 41

Given the following conditions:

- A reactor trip has occurred.
- Safety Injection is actuated.
- The crew is performing EP/1/A/5000/E-0, Reactor Trip or Safety Injection.
- NC System pressure is 1300 psig and stable.
- SG pressures are 1050 psig and stable.
- SG NR Levels are as follows:
  - A – 9%
  - B – 10%
  - C – 8%
  - D – 10%
- CA flow is 0 GPM.
- The operators have just completed E-0.

Which ONE (1) of the following describes the plant condition upon transition from E-0?

A. A small break LOCA is in progress and SGs are required for NC System heat removal. FR-H.1 will be performed.

B. A small break LOCA is in progress and SGs are NOT required for NC System heat removal. FR-H.1 will NOT be performed.

C. A large break LOCA is in progress and SGs are required for NC System heat removal. FR-H.1 will be performed.

D. A large break LOCA is in progress and SGs are NOT required for NC System heat removal. FR-H.1 will NOT be performed.

Proposed Answer: A

Explanation (Optional):

A is correct. With NC System pressure higher than SG pressure, a secondary heat sink is required. Therefore, FR-H.1 is required.

B is incorrect. SGs are available and required to remove heat from the RCS

C is incorrect. A SBLOCA is in progress as indicated by NC System pressure being above ND Pump shutoff head. SGs would not be required for heat removal if LBLOCA in progress

D is incorrect. LBLOCA in progress; same as C above; but if applicant believes it is a LBLOCA, then not using FR-H.1 would seem correct

Technical Reference(s): FR-H.1, pg 1, 2 (Attach if not previously provided)
EP-FRH lesson, pg 27

Proposed references to be provided to applicants during examination: None

Learning Objective: EF-FRH, Obj 2 (As available)

Question Source: Bank # _____
Modified Bank # X (Note changes or attach parent)
New _____

Question History: Last NRC Exam Harris 2004

Question Cognitive Level: Memory or Fundamental Knowledge _____
Comprehension or Analysis X

10 CFR Part 55 Content: 55.41 7,10
55.43 _____

Comments:

CLASSROOM TIME (Hours)

NLO	NLOR	LPRO	LPSO	LOR
		3	3	2.5

OBJECTIVES

SEQ	OBJECTIVE	NLO	NLOR	LPRO	LPSO	LOR
1	Explain the purpose of each procedure in the FR-H series. EPFRH001			X	X	
2	Discuss the entry and exit guidance for each procedure in the FR-H series. EPFRH002			X	X	
3	Discuss the mitigating strategy (major actions) of each procedure in the FR-H series. EPFRH003			X	X	X
4	Discuss the basis for any note, caution or step for each procedure in the FR-H series. EPFRH004			X	X	X
5	Given the Foldout page, discuss the actions included and the basis for these actions. EPFRH005			X	X	X
6	Given the appropriate procedure, evaluate a given scenario describing accident events and plant conditions to determine any required action and its basis. EPFRH006			X	X	X
7	Discuss the time critical task(s) associated with the FR-H series procedures including the time requirements and the basis for these requirements. EPFRH007			X	X	X

CAUTION If a non-faulted S/G is available, then feed flow should only be established to non-faulted S/Gs in subsequent steps.

PURPOSE: To alert the operator to not reestablish feed flow to a faulted S/G if an intact or ruptured S/G is available to receive the feed flow.

BASIS: Reestablishment of feed flow to a S/G may result in thermal or mechanical shocks to the S/G tubes that could result in tube leakage or tube rupture. If feed flow is reestablished to a faulted S/G and tube leakage resulted, control of the leakage would not be possible until the S/G secondary boundary was restored. Flow restoration to a non-faulted S/G will provide an effective and controllable secondary heat sink.

STEP 2 Check if a secondary heat sink is required:

PURPOSE: To check if a secondary heat sink is required for heat removal.

BASIS: Before implementing actions to restore flow to the S/Gs, the operator should check if secondary heat sink is required. For larger LOCA break sizes, the NC system will depressurize below the intact S/G pressures. The S/Gs no longer function as a heat sink and the core decay heat is removed by the break flow. For this range of LOCA break sizes, the secondary heat sink is not required and actions to restore secondary heat sink are not necessary. For these cases, the operator returns to the procedure and step in effect.

Since Step 19 directs the operator to return to Step 1 if the loss of secondary heat sink parameters are not exceeded, break sizes that take longer to depressurize the NC system will be detected on subsequent passes through Step 1.

If NC system temperature is low enough to place the ND system in service in RHR mode, then the ND system is an alternate heat sink to the secondary system. Therefore, an attempt is made to place the ND system in service (Enclosure 2, Placing ND In RHR Mode) in parallel to the attempts to reestablish feedwater flow. NC system pressure must be below normal ND system pressure limits. When adequate ND cooling is established, then the operator is directed to return to the procedure and step in effect.

Generic Enclosure G-2 (Placing ND in RHR Mode) contains guidance to align one, or both trains, of ND in RHR Mode; leaving one, or no train, available for auto swap to sump; or leaving one train on sump and one train in RHR mode.

The decision for alignment will be made with concurrence/guidance from TSC, if available.

A. Purpose

This procedure provides actions to respond to a loss of secondary heat sink in all steam generators.

B. Symptoms or Entry Conditions

This procedure is entered from:

- EP/1/A/5000/E-0 (Reactor Trip Or Safety Injection), Step 16, when minimum CA flow is not verified **AND** N/R level in all S/Gs is less than 11% (32% ACC).
- EP/1/A/5000/F-0 (Critical Safety Function Status Trees) (Heat Sink), on a red condition.

ACTION/EXPECTED RESPONSE	RESPONSE NOT OBTAINED

C. Operator Actions

__ 1. **IF total feed flow is less than 450 GPM due to operator action, THEN RETURN TO procedure and step in effect.**

CAUTION **If a non-faulted S/G is available, then feed flow should only be established to non-faulted S/G(s) in subsequent steps.**

2. **Check if secondary heat sink is required:**

__ a. NC pressure - GREATER THAN ANY NON-FAULTED S/G PRESSURE.	__ a. **RETURN TO** procedure and step in effect.
__ b. Any NC T-Hot - GREATER THAN 350°F (347°F ACC).	b. Perform the following while continuing in this procedure: 1) Try to place ND in RHR mode: __ a) Ensure NC pressure is less than 385 PSIG. __ b) **IF** S/I has occurred, **THEN** place ND in RHR mode **PER** EP/1/A/5000/G-2 (Placing ND In RHR Mode). __ c) **IF** S/I has not occurred, **THEN** place ND in RHR mode **PER** Enclosure 2 (Placing ND in RHR mode). __ 2) **WHEN** adequate ND cooling is established, **THEN RETURN TO** procedure and step in effect.

__ 3. **Monitor Foldout Page.**

Examination Outline Cross-reference:	Level	RO	SRO
	Tier #	1	
	Group #	1	
	K/A #	011 EA2.13	
	Importance Rating	3.7	

Ability to determine or interpret the following as they apply to a Large Break LOCA: Difference between overcooling and LOCA indications

Proposed Question: Common 42

The crew has entered FR-P.1, Response to Imminent Pressurized Thermal Shock due to a RED condition on the Integrity CSF Status Tree.

Which ONE (1) of the following describes the parameter that determines whether the Red condition on NC System Integrity was caused by a large LOCA or an actual PTS event?

A. RVLIS level

B. SG pressure

C. ND flow rate

D. NC temperature

Proposed Answer: C

Explanation (Optional):

C is correct. ND flow rate indicates there is a large break LOCA in progress

A is incorrect. RVLIS would be an indicator of a LBLOCA, but could also be abnormal for a SBLOCA, which is a significant PTS concern.

B is incorrect. SG pressure may be going down for either event, whether a secondary break or primary break.

D is incorrect. Temperature will be reduced for LBLOCA due to ECCS flow as well as in a PTS event

Technical Reference(s): FR-P.1, pg 2 (Attach if not previously provided)

EP-FRP, pg 19

Proposed references to be provided to applicants during examination: None

Learning Objective: EP-FRP Obj 2 (As available)

Question Source: Bank # _____
Modified Bank # _____ (Note changes or attach parent)
New X

Question History: Last NRC Exam _____

Question Cognitive Level: Memory or Fundamental Knowledge X
Comprehension or Analysis _____

10 CFR Part 55 Content: 55.41 10
55.43 _____

Comments:

CLASSROOM TIME (Hours)

NLO	NLOR	LPRO	LPSO	LOR
		3.0	3.0	2.0

OBJECTIVES

SEQ	OBJECTIVE	NLO	NLOR	LPRO	LPSO	LOR
1	Explain the purpose of each procedure in the FR-P series. EPFRP001			X	X	
2	Discuss the entry and exit guidance for each procedure in the FR-P series. EPFRP002			X	X	
3	Discuss the mitigating strategy (major actions) of each procedure in the FR-P series. EPFRC003			X	X	X
4	Discuss the basis for any note, caution or step for each procedure in the FR-P series. EPFRP004			X	X	X
5	Given the Foldout page, discuss the actions included and the basis for these actions. EPFRP005			X	X	X
6	Given the appropriate procedure, evaluate a given scenario describing accident events and plant conditions to determine any required action and its basis. EPFRP006			X	X	X
7	Discuss the time critical task(s) associated with the FR-P series procedures including the time requirements and the basis for these requirements. EPFRP007			X	X	X

3.4 Detailed Description of Procedural Steps

STEP 1 Check NC pressure – GREATER THAN 286 PSIG.

PURPOSE: To determine the applicability of FR-P.1.

BASIS: If NC system pressure is less than 286 PSIG and ND pump flow is greater than 500 GPM, then FR-P.1 is not applicable and the operator is directed to return to the procedure and step in effect.

An additional kick out is included if a loss of emergency coolant recirc event has occurred during a large LOCA. Both ND pumps will likely be off as a result of, or cause of loss of ECR. Using ND pump flow as confirmation of large break LOCA does not work for this event, resulting in misdiagnosing applicability of FR-P.1. Note that this kick out is required to maintain core cooling. If delay in implementing ECA-1.1 were to occur, due to spending time in a procedure that does not apply during a large LOCA, time critical actions to limit FWST depletion may not get done in time to maintain injection flow.

For large LOCA, FR-P.1 can be quickly exited if NC system pressure is low and ND pumps are injecting. If McGuire cannot align ND pump to sump, we stop ND pump in ES-1.3 (Transfer to Cold Leg Recirc). This is required to avoid excessive FWST level loss (due to ND pump operation on FWST) while swapping remainder of ECCS pumps to CLR for design base event. If we cannot transfer either ND pump (beyond design base/loss ECR event), we will exit ES-1.3 with both ND pumps off. In this configuration, we cannot use FR-P.1 a quick exit (as written) since ND pumps will not be injecting. Checking ND flow is an independent check (from press indication) that large LOCA exists.

STEP 2 Monitor Foldout Page

PURPOSE: To ensure operators monitor the need to transfer to Cold Leg Recirc.

To remind the operator that the FR-P.1 Foldout page should be open.

BASIS: The Foldout page, included as Enclosure 1, provides a list of important items that should be continuously monitored. If any of the parameters exceed their limits, the appropriate operations should be initiated.

In particular, the Foldout page was added to ensure operators monitor the need to transfer to Cold Leg Recirc as required. Due to a low containment spray actuation setpoint (Ice Condenser plant), an early transfer to Cold Leg Recirc may be required.

ACTION/EXPECTED RESPONSE	RESPONSE NOT OBTAINED

C. Operator Actions

__ 1. **Check NC pressure - GREATER THAN 286 PSIG.**	**Perform the following:** __ a. **IF** ND pump flow is greater than 500 GPM, **THEN RETURN TO** procedure and step in effect. b. **IF** both of the following are true, **THEN RETURN TO** procedure and step in effect. __ • Both ND pumps off __ • Loss of emergency coolant recirc event has occurred.
__ 2. **Monitor Foldout Page.**	
__ 3. **Check NC T-Colds - STABLE OR GOING UP.**	**Try to stop NC System cooldown as follows:** __ a. Ensure SM PORVs closed. b. **IF** any SM PORV can not be closed, **THEN**: __ 1) Close its isolation valve. __ 2) **IF** SM PORV isolation valve cannot be closed, **THEN** dispatch operator to close SM PORV isolation valve. __ c. Ensure condenser dump valves closed. __ d. **IF** ND in RHR mode, **THEN** stop any cooldown from ND System. e. Identify faulted S/G(s): __ • Any S/G pressure going down in an uncontrolled manner OR __ • Any S/G depressurized. (RNO continued on next page)

Examination Outline Cross-reference:	Level	RO	SRO
	Tier #	1	
	Group #	1	
	K/A #	015 AA1.05	
	Importance Rating	3.8	

Ability to operate and / or monitor the following as they apply to the Reactor Coolant Pump Malfunctions (Loss of RC Flow): RCS flow

Proposed Question: Common 43

The unit is operating at 55% power.

Of the selections below, which ONE (1) is the MINIMUM condition required to initiate Low NCP Flow reactor trip?

A. 2/3 channels on 1/4 loops sense less than 95% flow.

B. 2/3 channels on 1/4 loops sense less than 88% flow.

C. 1/3 channels on 2/4 loops sense less than 95% flow.

D. 1/3 channels on 2/4 loops sense less than 88% flow.

Proposed Answer: B

Explanation (Optional):
B is correct.
A is incorrect. Flow is too high, but similar to NC Pump bus underfrequency trip setpoint
C is incorrect. Requires 2 of 3 channels, and setpoint reason same as A
D is incorrect. Requires 2 of 3 channels, but setpoint is correct

Technical Reference(s): IC-IPE, pg 47 (Attach if not previously provided)

Proposed references to be provided to applicants during examination: None

Learning Objective: IC-IPE-10 (As available)

Question Source: Bank # _____
Modified Bank # _____ (Note changes or attach parent)
New X

Question History: Last NRC Exam _____

Question Cognitive Level: Memory or Fundamental Knowledge X
Comprehension or Analysis _____

10 CFR Part 55 Content: 55.41 7
55.43 _____

Comments:

SEQ	OBJECTIVE	NLO	NLOR	LPRO	LPSO	LOR
8	Describe the function of the First-Out annunciator panel. ICIPE008			X	X	
9	Given a Limit and/or Precaution associated with an operating procedure, discuss its basis and applicability. ICIPE009		X	X	X	X
10	List all the Reactor Trip Signals including the setpoints, logic permissives and bases/protection afforded by each. ICIPE010		X	X	X	X
11	List all the protective system permissive ("P" signal) interlocks to include input parameter(s), logic and function. For interlocks which provide Trip block, state the Trips affected and whether Auto or Manual block. ICIPE011			X	X	X
12	List all the protection system control ("C" signal) interlocks including logic and functions. ICIPE012			X	X	X
13	Briefly describe the incident that occurred at Salem Nuclear Plant and how this event affected McGuire Reactor Trip Breaker operation. ICIPE013			X	X	X

Objective # 10

NC Pump Bus Under Frequency (2/4 busses = 56 Hz) - this anticipatory loss of coolant flow trip protects against DNB. The trip also trips open all four NC pump breakers to prevent electrical braking of the pump motors during frequency decay. A reduction in pump speed would reduce fly wheel inertia and pump coast down flow capability. This "at-power" trip protection is auto-blocked < 10% power (P-7) and is automatically reinstated > P-7.

SG Lo-Lo Level (2/4 channels on 1/4 SGs = 17%) - protects against a loss of heat sink. This protection also causes an auto-start of the CA motor driven pumps (2/4 channels on 1/4 SGs) and the CA turbine driven Pump (2/4 channels on 2/4 SGs).

Single Loop Loss of Flow (2/3 channels in 1/4 loops = 88%) - protects against DNB. This protection is auto-blocked < 48% (P-8) and automatically reinstated > P-8.

Two Loop Loss of Flow (2/3 channels in 2/4 loops = 88%) - protects against DNB. This protection is auto-blocked < 10% (P-7) and automatically reinstated > P-7.

Safety Injection (any SI signal 1/2 Trains) - initiates a reactor trip during LOCA events.

Turbine Trip (2/3 channels ASO < 45psig, 4/4 stop valves closed) - protects against loss of integrity by preventing Pressurizer PORVs from opening on turbine trip at high power.

Objective # 4, 10

General Warning (2/2 Trains) - protects against a loss of both protection trains. Anytime a General Warning is present on both SSPS trains a reactor trip will occur. General Warning is caused by: loose circuit board card; loss of voltage (AC or DC); SSPS train in "Test"; a Reactor Trip By-pass breaker in the Connected position and Closed; a Logic Ground Return fuse blown.

3.1.3 Protection Permissive Interlocks

Objective # 11

P-4 (Reactor Trip Breaker and Bypass Breaker Open for a given train) - initiates: Turbine Trip; Feedwater Isolation (coincident with low Tavg of 553 °F); Allows reset of SI signal after one minute time-out; Inputs to Steam Dump Control System for plant trip mode.

P-6 (1/2 IR instruments > 10^{-10} amps) - allows Manual Block of SR reactor trip. On a power reduction, provides automatic reinstatement of SR high voltage and SR reactor trip when 2/2 IR channels < 10^{-10} amps.

P-7 (2/4 PR instruments > 10% or 1/2 Turbine Impulse Pressures > 10%) - Enables (unblocks) the "at power" reactor trips: Pzr Hi-Level, Pzr Lo-Pressure, 2 Loop Loss of Flow, NCP UV, and NCP UF. The above trips are automatically blocked when below P-7, 3/4 PR < 10% and 2/2 Impulse Pressure < 10%.

Examination Outline Cross-reference:	Level	RO	SRO
	Tier #		
	Group #		
	K/A #	025 AK1.01	
	Importance Rating	3.9	

Knowledge of the operational implications of the following concepts as they apply to Loss of Residual Heat Removal System: Loss of RHRS during all modes of operation

Proposed Question: Common 44

The following conditions exist:

- The Unit is in Mode 5
- NC System level is 25 inches and stable
- The S/G manways are installed and the Reactor Vessel Head is set
- Both ND Pumps were stopped due to ND-1 being inadvertently closed
- ND System venting is complete
- The Pressurizer PORV's are open
- ND-1 is re-opened
- NC temperature is 140 °F and slowly going up
- Thermal Margin is 40 minutes

REFERENCE PROVIDED

Which ONE (1) of the following actions is required to stop the NC System heat-up?

A. Start an ND Pump

B. Establish NC Feed and Bleed

C. Begin a High Volume make-up to the NC System

D. Open the Condenser Steam Dumps

Proposed Answer: A

Explanation (Optional):

A is correct.

B is incorrect. Inventory is not lost and temperature is not rising uncontrollably

C is incorrect. High volume makeup would be required for loss of inventory. This event is an interruption in cooling flow caused by valve failure

D is incorrect. NC Temperature is not high enough for this action. SGs are not heat sinks at 140 degrees F

Technical Reference(s): AP-19, pg 1-13 (Attach if not previously provided)

Proposed references to be provided to applicants during examination: AP-19

Learning Objective: AP-19 Obj 2 (As available)

Question Source: Bank # X(APAP19R04)

Modified Bank # _____ (Note changes or attach parent)

New _____

Question History: Last NRC Exam _____

Question Cognitive Level: Memory or Fundamental Knowledge _____

Comprehension or Analysis X

10 CFR Part 55 Content: 55.41 10

55.43 _____

Comments:

CLASSROOM TIME (Hours)

NLO	NLOR	LPRO	LPSO	LOR
		1.0	1.0	1.0

OBJECTIVES

	OBJECTIVE	NLO	NLOR	LPRO	LPSO	LOR
1	Concerning AP/1(2)/5500/19 (Loss of ND OR ND SYSTEM LEAKAGE): • State the purpose of the AP • Recognize the symptoms that would require implementation of the AP. AP19001			X	X	X
2	Given scenarios describing accident events and plant conditions, evaluate the basis for any caution, note, or step. AP19002			X	X	X

A. Purpose

To identify the appropriate actions in the event of a loss of the ND System or a leak on the ND System.

ACTION/EXPECTED RESPONSE	RESPONSE NOT OBTAINED

B Symptoms

"A (B) ND PUMP LO FLOW TO COLD LEGS" Alarm

"A (B) ND PUMP DISCHARGE HI PRESS" Alarm

ND pump tripped

ND pump low discharge pressure OAC alarm

Core exit T/Cs high temperature OAC alarm

"NC SYSTEM LO LEVEL" OAC alarm

ND flow low OAC alarm.

Containment Sump level going up

Refueling Cavity level going down

ND pump flow going up

NC System level going down

NC System pressure going down

Known ND System leak.

ACTION/EXPECTED RESPONSE	RESPONSE NOT OBTAINED

C. Operator Actions

CAUTION **Changes in NC pressure could result in inaccuracies in NC Level indications.**

__ 1. **Check ND pumps - ANY RUNNING.**	__ **GO TO Step 4.**
2. **Check if ND pumps should be stopped:**	
__ a. NC Level - GREATER THAN 4 INCHES.	a. Perform the following: __ 1) Stop ND pumps. 2) Close the following: __ • 1ND-30A (Train A ND To Hot Leg Isol) __ • 1ND-33 (A ND Hx Bypass) __ • 1ND-18 (B ND Hx Bypass) __ • 1ND-15B (Train B ND To Hot Leg Isol). __ 3) **GO TO** Step 4.
__ b. Check NC subcooling based on core exit T/Cs - GREATER THAN 0°F.	b. Perform the following: __ 1) Stop ND pump(s). __ 2) Ensure all NC pumps off. 3) Close the following: __ • 1ND-30A (Train A ND To Hot Leg Isol) __ • 1ND-33 (A ND Hx Bypass) __ • 1ND-18 (B ND Hx Bypass) __ • 1ND-15B (Train B ND To Hot Leg Isol). __ 4) **GO TO** Step 4.

ACTION/EXPECTED RESPONSE	RESPONSE NOT OBTAINED
2. (Continued)	
c. Check the following valves - OPEN:	c. Perform the following:
__ • 1ND-1B (C NC Loop to ND Pumps)	__ 1) Stop ND pump(s).
__ • 1ND-2AC (C NC Loop To ND Pumps).	__ 2) **GO TO** Step 4.
d. **IF AT ANY TIME** NC level goes below 4 inches **OR** NC subcooling based on core exit T/Cs goes below 0°F, **THEN**:	
__ 1) Stop ND pump(s).	
2) Close the following:	
__ • 1ND-30A (Train A ND To Hot Leg Isol)	
__ • 1ND-33 (A ND Hx Bypass)	
__ • 1ND-18 (B ND Hx Bypass)	
__ • 1ND-15B (Train B ND To Hot Leg Isol).	

ACTION/EXPECTED RESPONSE	RESPONSE NOT OBTAINED

NOTE ND flow control valves fail open on a loss of air.

3. **Check ND flow control:**

__ a. Check total ND System flow - GREATER THAN 3000 GPM.	__ a. **GO TO** Step 3.c.
b. Throttle as necessary to reduce ND System to less than 3000 GPM: __ • 1ND-14 (B ND Hx Outlet) __ • 1ND-29 (A ND Hx Outlet) __ • 1ND-34 (A & B ND Hx Bypass).	b. Perform the following: **NOTE** When throttling closed 1NI-173A or 1NI-178B, the seal-in circuit may cause the valve to fully close before a drop in flow is seen. If the valve inadvertently closes, it may be pulsed open to the desired flow. 1) Throttle as necessary to reduce ND System to less than 3000 GPM: __ • 1NI-173A (Train A ND To A & B CL) __ • 1NI-178B (Train B ND To C & D CL). 2) **IF** ND pump(s) cavitating, **THEN**: __ a) Stop ND pump(s) __ b) **GO TO** Step 4. 3) Place the following manual loaders in the full open position: __ • 1ND-29 (A ND Hx Outlet) __ • 1ND-14 (B ND Hx Outlet). __ 4) **GO TO** Step 3.f.
__ c. Check ND pump(s) - CAVITATING.	__ c. **GO TO** Step 4.
__ d. Stop ND pump(s).	

ACTION/EXPECTED RESPONSE	RESPONSE NOT OBTAINED

3. (Continued)

__ e. **GO TO** Step 4.

__ f. Throttle 1ND-34 (A & B ND Hx Bypass) as necessary to control ND HX bypass flow.

f. Perform the following:

NOTE 1ND-33 and 1ND-18 can be throttled in open direction only (seals in on closed direction).

1) Throttle the following as necessary to control ND HX bypass flow:

__ • 1ND-33 (A ND Hx Bypass)
__ • 1ND-18 (B ND Hx Bypass).

2) **IF** necessary to isolate ND HX bypass flow **AND** valve(s) above will not close, **THEN** close the following:

__ • 1ND-30A (Train A ND To Hot Leg Isol)
__ • 1ND-15B (Train B ND To Hot Leg Isol).

__ 3) Place the manual loader for 1ND-34 (A & B ND Hx Bypass) in the full open position.

ACTION/EXPECTED RESPONSE	RESPONSE NOT OBTAINED
4. **Isolate containment as follows:**	
a. Announce the following on page:	
__ 1) Description of event.	
__ 2) "All personnel evacuate Unit 1 containment."	
__ b. Actuate containment evacuation alarm.	
__ c. **REFER TO** RP/0/A/5700/011 (Conducting a Site Assembly, Site Evacuation, or Containment Evacuation) while continuing with this procedure.	
__ d. Check PT/1/A/4200/002 C (Containment Closure/Integrity) - IN EFFECT.	__ d. **GO TO** Step 5.
__ e. Notify Containment Closure Coordinator to initiate containment closure.	

ACTION/EXPECTED RESPONSE	RESPONSE NOT OBTAINED
5. **Check if makeup should be initiated as follows:**	
__ a. Check NC temperature prior to event - GREATER THAN 200°F.	a. Perform the following: 1) **IF** NC level going down, **THEN**: __ • Reduce or isolate letdown. __ • Initiate makeup as required **PER** Enclosure 3 (NC System Makeup During Loss of ND). __ 2) **GO TO** Step 6.
b. Check NC parameters: __ • Pzr level - GREATER THAN 11% (29% ACC) __ • Pzr level - STABLE OR GOING UP __ • NC subcooling based on core exit T/Cs - GREATER THAN 0°F.	b. Perform the following as required to maintain Pzr level and subcooling: __ 1) Maintain charging flow less than 200 GPM at all times in subsequent steps. __ 2) Ensure 1NV-238 (Charging Line Flow Control) opening. __ 3) Open 1NV-241 (Seal Inj Flow Control) while maintaining NC pump seal flow greater than 6 GPM. __ 4) Reduce or isolate letdown. 5) **IF** subcooling or Pzr level cannot be restored, **THEN**: __ a) Initiate makeup through 1NI-9A or 1NI-10B **PER** Enclosure 5 (Makeup Via NV Pumps Through S/I Flow Path). __ b) **IF AT ANY TIME** additional flow required to restore subcooling and Pzr level, **THEN** start one NI pump aligned to cold legs **PER** Enclosure 6 (Makeup Via NI Pumps).
__ 6. **REFER TO RP/0/A/5700/000 (Classification of Emergency).**	

ACTION/EXPECTED RESPONSE	RESPONSE NOT OBTAINED
__ 7. **Check Pzr level - LESS THAN 76%.**	**Perform the following:** __ a. **IF** level has gone down in an uncontrolled manner, **OR** NC subcooling based on core exit T/Cs less than 0°F, **THEN GO TO** Step 8. __ b. **IF** level stable or going up, **THEN GO TO** Step 9.
8. **Isolate letdown and known drain paths as follows:** __ a. Stop any NC System draining in progress. b. Close the following NV letdown isolation valves: __ 1) 1NV-458A (75 GPM L/D Orifice Outlet Cont Isol). __ 2) 1NV-457A (45 GPM L/D Orifice Outlet Cont Isol). __ 3) 1NV-35A (Variable L/D Orifice Outlet Cont Isol). __ 4) 1NV-1A (NC L/D Isol To Regen Hx). __ 5) 1NV-2A (NC L/D Isol To Regen Hx). __ 6) 1NV-7B (Letdown Cont Outside Isol). c. Close the following ND letdown valves: __ 1) 1NV-121 (ND Letdown Control). __ 2) 1ND-32 (A ND Hx To Letdown Hx). __ 3) 1ND-17 (B ND Hx To Letdown Hx).	

ACTION/EXPECTED RESPONSE	RESPONSE NOT OBTAINED
9. **Perform the following to comply with Tech Specs:** __ • Suspend loading irradiated fuel assemblies in the core (unless required by AP/1/A/5500/40 (Loss Of Refueling Cavity Level)). __ • Suspend operations that will reduce NC boron concentration.	
__ 10. **Check NC temperature prior to event - LESS THAN 200°F.**	**Perform the following:** __ a. Dump steam as required to stabilize core exit T/C's. b. **IF** leak exists inside containment **AND** leak size is greater than capacity of normal charging, **THEN** close the following: __ • 1KC-430A (Rx Bldg Drain Hdr Cont Outside Isol) __ • 1KC-429B (Rx Bldg Drain Hdr Cont Inside Isol) __ • 1WL-64A (RB Sump Pumps Disch Cont Inside Isol) __ • 1WL-321A (Cont Vent Unit Drn Cont Inside Isol) __ • 1WL-65B (RB Sump Pumps Disch Cont Outside Isol) __ • 1WL-322B (Cont Vent Unit Drn Cont Outside Isol). __ c. **IF** leak on ND suspected, **THEN GO TO** Enclosure 19 (Isolation of Leak On ND). __ d. **IF** LOCA exists inside containment, **THEN GO TO** AP/1/A/5500/34 (Shutdown LOCA). __ e. **GO TO** Step 33.
__ 11. **WHEN STA available, THEN have STA monitor Enclosure 20 (Long Term Core Cooling Considerations).**	

ACTION/EXPECTED RESPONSE	RESPONSE NOT OBTAINED
__ 12. **Check ND flow - LOST.**	**Perform the following:** a. **IF** leak on ND suspected, **THEN** perform one of the following: __ • **IF** makeup to the NC System is maintaining NC inventory, **THEN GO TO** Enclosure 19 (Isolation of Leak On ND). OR • **IF** loss of NC inventory imminent, **THEN**: __ 1) Stop ND pumps. __ 2) **GO TO** Step 13. __ b. **WHEN** leak stopped **AND** ND pump running in RHR, **THEN** exit this procedure. __ c. Do not continue unless both ND pumps are off.
__ 13. **Check "THERMAL MARGIN" (on 1MC-6) - GREATER THAN 30 MINUTES.**	__ **GO TO Step 15.**

ACTION/EXPECTED RESPONSE	RESPONSE NOT OBTAINED
14. **Check if immediate restart of ND is available as follows:**	
a. Check the following:	__ a. **GO TO** Step 15.
__ • NC subcooling based on core exit T/Cs - GREATER THAN 0°F	
__ • NC level - STABLE OR GOING UP	
__ • Suction flowpath for ND pump - ALIGNED	
__ • Train of ND - IMMEDIATELY AVAILABLE TO RESTART.	
__ b. Check if air entrainment - KNOWN TO HAVE OCCURRED.	__ b. **GO TO** Step 14.d.
__ c. **GO TO** Step 15.	
__ d. **IF AT ANY TIME** it appears that NC subcooling based on core exit T/Cs may be lost prior to restarting ND pump, **THEN GO TO** Step 15.	
__ e. Restart ND **PER** Enclosure 14 (Startup of ND Pumps).	__ e. **GO TO** Step 15.
__ f. **RETURN TO** procedure and step in effect.	

ACTION/EXPECTED RESPONSE	RESPONSE NOT OBTAINED
15. **Check if Refueling Canal is adequate heat sink as follows:**	
__ a. Refueling Canal level - GREATER THAN 23 FT. (362 inches on "NC SYSTEM LEVEL WR").	__ a. **GO TO** Step 16.
__ b. Reactor Upper Internals - REMOVED.	b. **IF** Reactor Upper Internals in place, **THEN** perform the following: **NOTE** The following enclosure will make alignments to prepare to transfer water from the Refueling Canal back to the FWST. Transfer of water will only be initiated if an NC feed and bleed is subsequently required by this AP. __ 1) Have another licensed operator perform Enclosure 22 (Transferring Water from Spent Fuel Pool to FWST). __ 2) **GO TO** Step 16.
__ c. Maintain refueling canal greater than 23 ft. (362 inches on "NC SYSTEM LEVEL WR").	
__ d. **GO TO** Step 21.	
16. **Start available containment fans as follows:**	
__ • Start all available VL AHU's and place in high speed.	
__ • Start all available CRD Vent fans.	

Examination Outline Cross-reference:	Level	RO	SRO
	Tier #	1	
	Group #	1	
	K/A #	026 AK3.01	
	Importance Rating	3.2	

Knowledge of the reasons for the following responses as they apply to the Loss of Component Cooling Water: Conditions that will initiate automatic opening and closing of SWS isolation valves to CCW coolers

Proposed Question: Common 45

Which ONE (1) of the following will cause the KC Heat Exchanger Supply Isolation Valve RN-86A to OPEN when it's AUTO/MANUAL Mode Switch in the MANUAL position?

A. RN flow to the KC Heat Exchanger falls below 2700 GPM.

B. Train related RN Pump Control Switch is placed in START.

C. Blackout or Safety Injection (S_s) signal is received.

D. KC Heat Exchanger outlet temperature rises above its setpoint.

Proposed Answer: C

Explanation (Optional):
C is correct.
A is incorrect. Would open in AUTO
B is incorrect. Would open in AUTO
D is incorrect. Would open in AUTO. All distractors are reasonable in that the applicant must understand all of the actuations that WOULD open the valve, and the function of the mode switch

Technical Reference(s): PSS-RN, pg 23, 39 (Attach if not previously provided)

Proposed references to be provided to applicants during examination: None

Learning Objective: PSS-RN Obj 7 (As available)

Question Source: Bank # _____
Modified Bank # _____ (Note changes or attach parent)
New X

Question History: Last NRC Exam _____

Question Cognitive Level: Memory or Fundamental Knowledge X
Comprehension or Analysis _____

10 CFR Part 55 Content: 55.41 7
55.43 _____

Comments:

CLASSROOM TIME (Hours)

NLO	NLOR	LPRO	LPSO	LOR
2	2	2	2	1

OBJECTIVES

	OBJECTIVE	NLO	NLOR	LPRO	LPSO	LOR
1	State the purpose of the Nuclear Service Water System.	X	X	X	X	
2	State the Ultimate Heat Sink requirements and how these requirements are satisfied at McGuire Nuclear Station.	X	X	X	X	
3	List the power supplies for the RN pumps	X	X	X	X	
4	Relating to the RN pumps:					
	• List the automatic start signals	X	X	X	X	X
	• State the actions required to manually stop the pump(s) following an automatic start.	X	X	X	X	X
5	Describe the operation of the RN Pump Base Drain, including the sump name to which it is pumped.	X	X	X	X	
6	Concerning the RN Pump Strainers: • State the conditions which will initiate an automatic strainer backwash. • Describe the actions required if a strainer high delta P signal were to occur while a S_S signal was present including the reason for this design feature.	X	X	X	X	X
7	Concerning the RN pump mini-flow protection: • Describe how mini-flow protection is accomplished. • Discuss the operation of the RN mini-flow manual loader and how flow is controlled.	X	X	X	X	

Objective #6

Each RN pump is provided with a **strainer** which will remove any trash and/or debris greater than or equal to 3/16 inch in diameter from its suction line. **(Refer to Drawing 7.2 for strainer configuration in the system).** Each strainer has a strainer motor which is safety related. The RN strainer motors have no manual separate or individual controls. Each strainer motor is interlocked to run when its corresponding RN pump is running. The strainer is also provided with an automatic timer which will backwash the strainer once every 120 hours. If the strainer delta P reaches 1.86 psi (51.47 in.wg), an automatic backwash on Hi Strainer Delta P will be initiated. If the auto backwash actuates on the 1.86 psi signal, the 120 hour timer will be reset. The strainer automatic backwash valves receive a close signal on a S_S signal. If a high Delta P signal were to occur while the S_S signal is present, backwash would have to be performed manually (manual valve operation). This feature is designed to prevent unnecessary loss of water from the system. Water for the backwash is provided by the respective RN pump and discharges to the opposite train RC crossover discharge. Manual backwash can also be performed by an operator by using a local pushbutton. When performed manually, the strainers should be backwashed for 3 to 5 minutes. Manual backwash (electric push button operation) is performed when the automatic backwash is not available and periodically on "some" frequency. The rounds sheet value calls for checking Delta P below 50 in wg.

Objective # 7

Mini-flow protection for the RN pumps is provided by flow through the KC heat Exchanger **(Refer to Drawing 7.4)**. When an RN pump starts, the train related RN to KC inlet isolation valve (RN86A, RN187B) will open (provided their auto/manual selector switch is in auto). These valves also open on a train related S_S or Blackout signal and can be operated by open/close pushbutton on the RN section of MC11. The train related RN to KC heat exchanger flow is controlled by outlet control valve (RN89A, RN190B) manual loaders located on the RN section of MC11. If RN flow falls below 2700 gpm, the auto control feature will override the manual loader and open the valve proportional to flow between 2700 gpm and 0 gpm. Valves RN89A and RN190B will fail open with the aid of springs to open the actuator on loss of air or S_S . Meter indication for the RN to KC A(B)HX flow (0 to 10,000 gpm) is provided on MC9.

The following **alarms on AD12** are provided for the RN pump and strainer

- "A(B) RN PUMP LO SUCTION PRESS"

Setpoint : 2 psig

Origin: Comes off LP side of strainer D/P instrumentation

Probable cause:

1. fouled strainer
2. valve misalignment
3. low level from suction
4. leak
5. excessive flow on A or B RN headers.

Automatic actions: - None

The KC HX Supply isolation Valves (RN-86A, 187B) have an AUTO/MANUAL mode select switch and an open/close pushbutton on MC11. The open/close pushbuttons are only operable when the mode switch is in the Manual position. If the mode select switch is in the AUTO position, the valve will auto open when the train related RN pump starts and will receive a signal to close when the train related RN pump is stopped. In either the AUTO or MANUAL mode of operation, these valves will automatically open upon receipt of a Blackout or Safety injection signal. Also, the Blackout and Safety injection signal is interlocked with the AUTO portion of the valve closure circuitry to prevent the valve from automatically closing while a Blackout or Safety injection signal is still present. The valves are normally selected to the AUTO mode.

Low Level intake isolation valve 1RN1 is a non-safety related MOV controlled from 1MC11 by a pushbutton which is covered to prevent operation of the valve except in an emergency. The valve is wired through two breakers in MCC SMXL. The breaker in compartment 3C is normally disconnected which allows power to the valve to be disconnected while still leaving control power available for position indication in the Control Room. Therefore in order to close 1RN1, power must be restored by reconnecting the breaker in MCC SMXL compartment 3C and using the manual close pushbutton. If maintenance activities require shifting RN suction to the RC cross over or SNSWP such that 1RN1 will be closed, compensatory action will be required for Train A to prevent specific valves from automatically re-aligning to LLI on a S_S or BO signal.

0RN-4AC (Train 1B & 2B RC Supply) and 0RN-148AC (Train 1A & 2A Disch to RC) will automatically open on SSF transfer. In addition to 0RN-4AC and 0RN148AC, valves 0RN-147AC, 0RN-283AC, 0RN-301AC, 0RN10AC, and 0RN12AC can be operated from the SSF. The RN controls and indications located in the Standby Shutdown Facility will be covered in Lesson plan OP-MC-CP-AD.

The **Train A(B) Engineering Safeguards Modulating Control Valve Reset** Pushbuttons and reset lights are located on the RN section of MC11. The modulating control valve circuitry controls the solenoids supplying air to selected safety related control valves. These control valves are normally controlled by other non-safety controllers and instrumentation. In order to prevent these non-safety controls from causing the control valves to assume an improper position after a safety event, these safety related solenoids valves will vent air off its control valve to cause it to assume its "safe" position. These solenoid valves de-energize upon receipt of a safety injection signal from the D/G load sequencer.

The modulating reset circuitry has a mechanical latching relay which will maintain the valves in their safe position after the safety injection signal is reset. To gain control of these valves, the safety injection signal must be reset and the operator must depress the train related modulating valve reset pushbutton. The indicating light is labeled "RESET" and is normally illuminated. Upon receipt of a Safety Injection Signal, the light will be off. Following reset of the latching relay, the light will illuminate. Failure of the fuse in the pushbutton circuit renders all modulating valves inoperable. PIP 0-M96-2018 in section 5.2 covers an operating experience associated with these fuses.

Examination Outline Cross-reference:	Level	RO	SRO
	Tier #	1	
	Group #	1	
	K/A #	027 AK1.02	
	Importance Rating	2.8	

Knowledge of the operational implications of the following concepts as they apply to Pressurizer Pressure Control Malfunctions: Expansion of liquids as temperature increases

Proposed Question: Common 46

Given the following conditions:

- A failure of the Pressurizer Pressure Master Controller has occurred.
- All pressurizer heaters were energized.
- NC Pressure reached 2310 psig prior to termination of the event.

Which ONE (1) of the following describes the effect on the PZR Surge Line temperature due to this failure?

A. INCREASED due to the outsurge.

B. DECREASED due to the outsurge.

C. INCREASED due to the insurge.

D. DECREASED due to the insurge.

Proposed Answer: A

Explanation (Optional):
A is correct. PZR sureg line temp increases as hotter PZR temp (approx 630 deg F) is expelled
B is incorrect. If there is a pressurizer outsurge, the surge line will heat up due to the hotter water coming from the PZR to RCS
C is incorrect. Temperature is correct but for the wrong reason.
D is incorrect. Would be correct if there was an insurge, but failure would cause an outsurge

Technical Reference(s): PS-NC Pg 61 (Attach if not previously provided)

Proposed references to be provided to applicants during examination: None

Learning Objective: PS-NC, obj 23 (As available)

Question Source: Bank # _____
Modified Bank # _____ (Note changes or attach parent)
New X

Question History: Last NRC Exam _____

Question Cognitive Level: Memory or Fundamental Knowledge _____
Comprehension or Analysis X

10 CFR Part 55 Content: 55.41 7
55.43 _____

Comments:

OBJECTIVES

	OBJECTIVE	NLO	NLOR	LPRO	LPSO	LOR
20	Describe how NCS temperature, pressure, flow and Pzr level are measured and indicated.		X	X	X	
21	Describe the operation and indication readout of the following NCS level instrumentation: • Ultrasonic level detection • WR level • NR level • Sightglass		X	X	X	X
22	State the nominal values for NC System pressure, Th, Tc, Tave, Pzr temperature for Hot Zero Power and Hot Full Power.	X	X	X	X	
23	Given a Limit and/or Precaution associated with the NC System, discuss its basis and when it applies.		X	X	X	X
24	Concerning the Technical Specifications related to the NC System: • Given the LCO title, state the LCO (including any COLR values) and applicability. • For any LCO's that have action required within one hour, state the action. • Given a set of parameter values or system conditions, determine if any Tech Spec LCO's is(are) not met and any actions(s) required within one hour. • Given a set of parameter values or system conditions and the appropriate Tech Spec, determine required action(s). • Discuss the bases for a given Tech. Spec. LCO or Safety Limit. * SRO ONLY			X X X X	X X X X X	X X X X *

- **IF** temperature difference between Pzr and spray fluid is greater than 320°F, use of Auxiliary Spray is prohibited.

- Auxiliary Spray should only be used with letdown in service to prevent thermal shocking of spray nozzle.

- Maintaining Pzr outsurge will minimize Pzr thermal stratification, thermal shock of Pzr Surge Line and voiding of Pzr Spray Line. Outsurge can be confirmed by maintaining the following conditions: [PIP 04-664]

    1. Extra Pzr heater capacity energized
    2. Pzr spray flow
    3. Spray valve closed on idle NC Pump
    4. Pzr Surge Line and Pzr Water Space Temperature approx. equal

<u>OP/1/A/6100/SU-9 Mode 4 Checklist</u>

- No Limits and Precautions

<u>OP/1/A/6100/SU-10 Heatup Checklist</u>

- No Limits and Precautions

Examination Outline Cross-reference:	Level	RO	SRO
	Tier #	1	
	Group #	1	
	K/A #	038 EA1.20	
	Importance Rating	3.8	

Ability to operate and monitor the following as they apply to a SGTR: AFW flow control valve reset switches and indicators

Proposed Question: Common 47

Given the following conditions:

- A Steam Generator Tube Rupture has occurred on Unit 1.
- The crew is performing event diagnosis in accordance with E-0, Reactor Trip or Safety Injection.
- Current SG NR levels are as follows:
  - SG 1A – 44%
  - SG 1B – 26%
  - SG 1C – 25%
  - SG 1D – 28%

Which ONE (1) of the following describes the action required to control CA flow to the SGs at this time?

A. Reset and throttle all CA flow control valves.

B. Reset and close CA flow control valves to SG 1A. Do NOT throttle CA flow control valves to the other SGs.

C. Reset and close CA flow control valves to SG 1A. Reset and throttle CA flow control valves to the other SGs.

D. Isolate CA flow to SG 1A using the MOV. Do NOT reset CA flow control valves to the other SGs.

Proposed Answer: B

Explanation (Optional):
B is correct. Valves will be reset, and valve to the faulted SG must be closed
A is incorrect. SG levels are not high enough (39%) to throttle to unaffected SGs
C is incorrect. Same reason as A, except that action for the faulted SG is correct.
D is incorrect. Isolating flow is by using the CA control valves at this point. May reset, but do not throttle the other valves.

Technical Reference(s): E-0, step 17, and Enc 3 (pg 2) (Attach if not previously provided)
OMP 4-3, pg 7

Proposed references to be provided to applicants during examination: None

Learning Objective: E-0, Obj 10 (As available)

Question Source: Bank # _____
Modified Bank # _____ (Note changes or attach parent)
New X

Question History: Last NRC Exam _____

Question Cognitive Level: Memory or Fundamental Knowledge _____
Comprehension or Analysis X

10 CFR Part 55 Content: 55.41 10
55.43 _____

Comments:

SEQ	OBJECTIVE	NLO	NLOR	LPRO	LPSO	LOR
10	Given the appropriate procedure, evaluate a given scenario describing accident events and plant conditions to determine any required action and its basis. EPE0010			X	X	X
11	Discuss the time critical task(s) associated with the E-0 series procedures including the time requirements and the basis for these requirements. EPE0011			X	X	X

ACTION/EXPECTED RESPONSE	RESPONSE NOT OBTAINED
17. **Check NC temperatures:** __ • **IF** any NC pump on, **THEN** check NC T-Ave - STABLE OR TRENDING TO 557°F. OR __ • **IF** all NC pumps off, **THEN** check NC T-Colds - STABLE OR TRENDING TO 557°F.	**Perform the following based on plant conditions:** __ a. **IF** temperature less than 557°F **AND** going down, **THEN** attempt to stop cooldown **PER** Enclosure 3 (Uncontrolled NC System Cooldown). b. **IF** temperature greater than 557°F **AND** going up, **THEN** stabilize temperature at 557°F: __ • **IF** steam dumps are available, **THEN** use steam dumps. OR __ • **IF** steam dumps not available, **THEN** use SM PORVs.

ACTION/EXPECTED RESPONSE	RESPONSE NOT OBTAINED
__ 4. **Check any NC pump - ON.**	**Perform the following:** __ a. **IF** any NC T-Cold is still going down, **THEN GO TO** Step 6. __ b. **IF** cooldown stopped, **THEN** exit this enclosure.
__ 5. **Check NC T-Ave - GOING DOWN.**	__ **IF cooldown stopped, THEN exit this enclosure.**
6. **Control feed flow as follows:** a. **IF** S/G N/R level is less than 11% (32% ACC) in all S/Gs, **THEN** throttle feed flow to achieve the following: __ • Minimize cooldown __ • Maintain total feed flow greater than 450 GPM. b. **WHEN** N/R level is greater than 11% (32% ACC) in at least one S/G, **THEN** throttle feed flow further to: __ • Minimize cooldown __ • Maintain at least one S/G N/R level greater than 11% (32% ACC).	
__ 7. **Check MSIVs - ANY OPEN.**	**Perform the following:** __ a. Close MSIV bypass valves. __ b. Exit this enclosure.
__ 8. **Close 1SM-15 (SM To 2nd Stage MSR).**	

Enclosure 2 - Phase B HVAC Equipment

This enclosure provides the Balance of Plant operator with actions necessary to perform various Containment Ventilation alignments. These actions are performed outside the Control Room horseshoe area. This enclosure is entered from the RNO of a step that checks that containment pressure has remained less than 3 psig.

Check VE System Operation:

- **Check VE fans - ON.**
- **Ensure all VE damper mode select switches in "AUTO":**
- **Check annulus pressure being maintained - NEGATIVE.**

BASIS: These steps verify proper operation of the annulus ventilation system in maintaining a negative pressure in the annulus. This prevents an unfiltered release from containment to the environment.

Check VX System Operation:

WHEN ten minutes after Phase B signal have elapsed, THEN

- **Check Containment Air Return and H2 Skimmer Fan damper alignment.**
- **Check Containment Air Return and H2 Skimmer Fans on.**

BASIS: The Containment Air Return fans play an important role in maintaining containment pressure low during the long transient of a LOCA by circulating air through the ice condenser and mixing/circulating the air being cooled by the Containment Spray System.

The Hydrogen Skimmer System ensures that isolated pockets of hydrogen don't build up in dead-ended spaces in containment.

Enclosure 3 - Uncontrolled NC System Cooldown

This enclosure provides the operator at the controls with actions to stop an uncontrolled cooldown by;

1. Checking steam release paths isolated: Steam dump valves and PORVs closed and MSRs reset,
2. Throttling feed flow to minimize cooldown while maintaining total flow greater than 450 gpm until level in at least one S/G is greater than 11% (32% ACC),
3. IF cooldown continues, Close MSIVs and bypass valves.

7.3 Abnormal Procedure Usage

Entry into an AP is based on an evaluation of symptoms referenced in the respective procedure. There are times when symptoms exist that are **NOT** at the level that the applicable abnormal procedure would be implemented. Those situations would be addressed by existing operating and/or alarm response procedures. **WHEN** more than one AP is applicable at the same time, the Control Room SRO will determine how many procedures can be implemented at a time and their priority based upon manpower available and ability to maintain control of the situation running more than one procedure at a time.

7.4 Immediate and Subsequent Actions

Immediate actions are to be performed immediately upon the recognition of the event. Immediate actions should be performed prior to the SRO reading them. **WHEN** the SRO does read the immediate action, the RO will ensure that all the requirements of the step have been fully implemented.

Subsequent action steps should be performed as the SRO reads the steps. ROs should **NOT** perform steps prior to the SRO reading the step. This practice can mask "root cause" symptoms of the event in progress, especially when performing EP/1(2)/A/5000/E-0 (Reactor Trip or Safety Injection).

The only subsequent actions that can be taken prior to procedure direction are the following:

1. CA may be reset and controlled to a S/G when that S/G reaches its normal level setpoint.

2. Known leaks may be isolated. Note that if procedure covers isolation of leak, it is usually preferable to wait until procedure step is reached. Licensed operator may isolate leak prior to reaching step only if plant conditions require it to be done.

3. NC Pumps may be tripped on an Sp signal due to the loss of support functions unless the procedure has directed otherwise.

IF equipment is in imminent danger of damage, operator may secure pump to prevent loss of equipment unless procedure has directed otherwise. An example is ECCS pump that has lost suction source. Caution needs to be exercised, for example, some RN pump cavitation may be expected in some high flow conditions, but pumps do **NOT** need to be secured since damage is **NOT** expected.

Examination Outline Cross-reference:	Level	RO	SRO
	Tier #	1	
	Group #	1	
	K/A #	040 AK1.07	
	Importance Rating	3.4	

Knowledge of the operational implications of the following concepts as they apply to Steam Line Rupture: Effects of feedwater introduction on dry S/G

Proposed Question: Common 48

Which ONE (1) of the following is the concern for initiating CA flow to a Steam Generator that has boiled dry due to a Steam Line Break?

A. Uncontrolled NC Cooldown rates greater than allowed by technical specifications.

B. Rapid depressurization of SG and NC resulting in SI initiation and a potential PTS event.

C. Failure of the SG components resulting in primary to secondary leakage.

D. Water hammer resulting in damage to the SG feed ring or other secondary piping.

Proposed Answer: C

Explanation (Optional):

C is correct

A is incorrect. Credible because initiation of cold water to a hot SG could cause a high cooldown rate

B is incorrect. Credible because the event could possibly happen, but is not the major concern that is asked

D is incorrect Credible because water hammer may occur to the feed ring. However, it is not the significant concern for the question asked.

Technical Reference(s): FR-H.1 basis pg 27 (Attach if not previously provided)

Proposed references to be provided to applicants during examination: None

Learning Objective: FR-H.1 Obj 4 (As available)

Question Source: Bank # X
Modified Bank # _____ (Note changes or attach parent)
New _____

Question History: Last NRC Exam _____

Question Cognitive Level: Memory or Fundamental Knowledge X
Comprehension or Analysis _____

10 CFR Part 55 Content: 55.41 3
55.43 _____

Comments:

CLASSROOM TIME (Hours)

NLO	NLOR	LPRO	LPSO	LOR
		3	3	2.5

OBJECTIVES

SEQ	OBJECTIVE	NLO	NLOR	LPRO	LPSO	LOR
1	Explain the purpose of each procedure in the FR-H series. EPFRH001			X	X	
2	Discuss the entry and exit guidance for each procedure in the FR-H series. EPFRH002			X	X	
3	Discuss the mitigating strategy (major actions) of each procedure in the FR-H series. EPFRH003			X	X	X
4	Discuss the basis for any note, caution or step for each procedure in the FR-H series. EPFRH004			X	X	X
5	Given the Foldout page, discuss the actions included and the basis for these actions. EPFRH005			X	X	X
6	Given the appropriate procedure, evaluate a given scenario describing accident events and plant conditions to determine any required action and its basis. EPFRH006			X	X	X
7	Discuss the time critical task(s) associated with the FR-H series procedures including the time requirements and the basis for these requirements. EPFRH007			X	X	X

CAUTION If a non-faulted S/G is available, then feed flow should only be established to non-faulted S/Gs in subsequent steps.

PURPOSE: To alert the operator to not reestablish feed flow to a faulted S/G if an intact or ruptured S/G is available to receive the feed flow.

BASIS: Reestablishment of feed flow to a S/G may result in thermal or mechanical shocks to the S/G tubes that could result in tube leakage or tube rupture. If feed flow is reestablished to a faulted S/G and tube leakage resulted, control of the leakage would not be possible until the S/G secondary boundary was restored. Flow restoration to a non-faulted S/G will provide an effective and controllable secondary heat sink.

STEP 2 Check if a secondary heat sink is required:

PURPOSE: To check if a secondary heat sink is required for heat removal.

BASIS: Before implementing actions to restore flow to the S/Gs, the operator should check if secondary heat sink is required. For larger LOCA break sizes, the NC system will depressurize below the intact S/G pressures. The S/Gs no longer function as a heat sink and the core decay heat is removed by the break flow. For this range of LOCA break sizes, the secondary heat sink is not required and actions to restore secondary heat sink are not necessary. For these cases, the operator returns to the procedure and step in effect.

Since Step 19 directs the operator to return to Step 1 if the loss of secondary heat sink parameters are not exceeded, break sizes that take longer to depressurize the NC system will be detected on subsequent passes through Step 1.

If NC system temperature is low enough to place the ND system in service in RHR mode, then the ND system is an alternate heat sink to the secondary system. Therefore, an attempt is made to place the ND system in service (Enclosure 2, Placing ND In RHR Mode) in parallel to the attempts to reestablish feedwater flow. NC system pressure must be below normal ND system pressure limits. When adequate ND cooling is established, then the operator is directed to return to the procedure and step in effect.

Generic Enclosure G-2 (Placing ND in RHR Mode) contains guidance to align one, or both trains, of ND in RHR Mode; leaving one, or no train, available for auto swap to sump; or leaving one train on sump and one train in RHR mode.

The decision for alignment will be made with concurrence/guidance from TSC, if available.

Examination Outline Cross-reference:	Level	RO	SRO
	Tier #	1	
	Group #	1	
	K/A #	055 EK3.02	
	Importance Rating	4.3	

Knowledge of the reasons for the following responses as they apply to the Station Blackout: Actions contained in EOP for loss of offsite and onsite power

Proposed Question: Common 49

Which ONE (1) of the following describes the reason for depressurizing the S/Gs to 210 psig in accordance with EP/1/A/5000/ECA-0.0, *"Loss of All AC Power"*?

A. Initiate Cold Leg Accumulator injection to re-establish NC System inventory and minimize NC Pump seal leakage by depressurizing the NC system.

B. Establish Natural Circulation conditions and initiate Cold Leg Accumulator injection.

C. Establish Natural Circulation conditions and minimize secondary heat sink requirements if CA inventory is limited.

D. Minimize secondary heat sink requirements if CA inventory is limited, and minimize NC Pump seal leakage.

Proposed Answer: A

Explanation (Optional):

A is correct

B is incorrect. NC system depressurization will assist natural circulation, but is not reason for depressurization to 210 psig

C is incorrect. Natural Circ will be set up as a byproduct of rapid depressurization; rapid cooldown and depressurization due to limited CA is an action that could be taken in E-3 series procedures.

D is incorrect. In other E-3 series procedures, rapid secondary depressurizations may be performed when there is limited makeup availability.

Technical Reference(s): ECA-0.0 basis pg 19 (Attach if not previously provided)

Proposed references to be provided to applicants during examination: None

Learning Objective: ECA 0.0 obj 4 (As available)

Question Source: Bank # X

Modified Bank # _____ (Note changes or attach parent)

New _____

Question History: Last NRC Exam _____

Question Cognitive Level: Memory or Fundamental Knowledge X

Comprehension or Analysis _____

10 CFR Part 55 Content: 55.41 10

55.43 _____

Comments:

CLASSROOM TIME (Hours)

NLO	NLOR	LPRO	LPSO	LOR
		1.5	1.5	1.0

OBJECTIVES

SEQ	OBJECTIVE	NLO	NLOR	LPRO	LPSO	LOR
1	Explain the purpose for each procedure in the ECA-0 series. EPECA001			X	X	
2	Discuss the entry and exit guidance for each procedure in the ECA-0 series. EPECA002			X	X	
3	Discuss the mitigating strategy (major actions) of each procedure in the ECA-0 series. EPECA003			X	X	X
4	Discuss the basis for any note, caution or step for each procedure in the ECA-0 series. EPECA004			X	X	X
5	Describe the immediate actions and include the RNO when appropriate. EPECA005			X	X	X
6	Given the appropriate procedure, evaluate a given scenario describing accident events and plant conditions to determine any required action and its basis. EPECA006			X	X	X
7	Discuss the time critical task(s) associated with the ECA-0 series procedures including the time requirements and the basis for these requirements. EPECA007			X	X	X

3.3.3. Maintain Plant Conditions for Optimal Recovery

This major action category consists of actions to mitigate deterioration of NC system conditions and establish plant conditions amenable to optimal recovery following AC power restoration. The operator is limited in actions available to mitigate deteriorating NC system conditions. By minimizing NC system inventory loss and maintaining a secondary heat sink, the operator can extend the time to core uncovery.

NC system inventory loss is minimized by depressurizing the secondary system, thereby resulting in the following.

1. Reducing NC system temperature to minimize NC pump seal degradation.
2. Reducing NC system pressure to reduce NC pump seal leakage and to permit injection of S/I accumulator water to partially replace the NC system inventory lost through the NC pump seals.

Secondary heat sink is maintained by controlling the turbine driven CA pump and the rate of S/G steam release to maintain narrow range (N/R) level in at least one intact S/G.

Plant conditions amenable to optimal recovery are established through operator actions that anticipate the restoration of AC power and establish required systems and equipment alignments prior to AC power restoration.

Defeating automatic loading of the energized AC emergency bus provides bus overload protection by permitting the operator to evaluate the status of the restored bus and to manually load equipment onto the bus consistent with bus status and plant conditions.

Actions to isolate NC pump seal cooling and to check the status of auxiliary boration systems permit the NC system inventory makeup systems to be quickly started and minimize the potential for equipment damage following AC power restoration.

Examination Outline Cross-reference:	Level	RO	SRO
	Tier #	1	
	Group #	1	
	K/A #	056 AA1.04	
	Importance Rating	3.2	

Ability to operate and / or monitor the following as they apply to the Loss of Offsite Power: Adjustment of speed of ED/G to maintain frequency and voltage levels

Proposed Question: Common 50

A Loss of Off-Site Power has occurred.

D/G '1B' is supplying bus 1ETB, loaded as follows:

- Voltage - 4120 volts.
- Frequency - 59.4 Hz.
- Load - 1800 KW.

Which ONE (1) of the following describes the response of D/G '1B' when the Governor Control Switch is taken to RAISE?

A. Frequency increases; Load and voltage remain the same or increase slightly.

B. Frequency and voltage remain the same; load increases.

C. Frequency increases; load remains the same; voltage decreases.

D. Frequency and voltage remain the same; load increases and VAR loading decreases slightly.

Proposed Answer: A

Explanation (Optional):
A is correct. Generator running disconnected from grid - No VAR loading or load sharing. Generator in isocronous mode means governor is speed = frequency. voltage is excitation=volts. When frequency is raised, other parameters may change slightly depending on the value of those parameters
B is incorrect. Partially correct if DG was paralleled
C is incorrect. In isochronous, raising frequency would not drop voltage
D is incorrect. Correct if DG was in parallel mode

Technical Reference(s): EL-ETR, pg 57-63 (Attach if not previously provided)

Proposed references to be provided to applicants during examination: None

Learning Objective: EL-ETR Obj 7 (As available)

Question Source: Bank # X
Modified Bank # _____ (Note changes or attach parent)
New _____

Question History: Last NRC Exam VC Summer 2006 Retake

Question Cognitive Level: Memory or Fundamental Knowledge _____
Comprehension or Analysis X

10 CFR Part 55 Content: 55.41 8
55.43 _____

Comments:

SEQ	OBJECTIVE	NLO	NLOR	LPRO	LPSO	LOR
7	State how generator parameters such as voltage, current frequency, power, and reactive load will change if the operator adjusts the generator's voltage and/or frequency controls for: • An AC generator as a single source supplying the bus/load. • An AC generator in parallel with other AC sources supplying a bus/grid. ELETR007	B	X	B	B	
8	Briefly explain how magnetic fields are used to make electrical motors. ELETR008	B	X	B	B	
9	State the motor current (I) indication you would expect to see when starting an AC induction motor. ELETR009	B	X	B	B	
10	State what happens to the current and speed of an AC induction motor when it is loaded. ELETR010	X	X	X	X	
11	State the purpose of station storage batteries. ELETR011	X	X	X	X	
12	State the purpose of the battery chargers. ELETR012	X	X	X	X	
13	State the normal alignment of, and the voltage/current relationships between the charger, battery and loads for: • Normal alignment • Loss of battery charger ELETR013	X	X	X	X	
14	Concerning battery charging: • State the types of battery charges • State the purpose of each type of charge • Discuss the voltage and current relationships during an equalize charge • Discuss the reason for and significance of disconnecting the loads from a battery undergoing an equalize charge. ELETR014	X	X	X	X	
15	State the purpose of static inverters. ELETR015	X	X	X	X	

A train car requires a force of 1000 lbs. to start movement. The train engine applies this force in a straight line in the first figure. In the second figure the train engine is still applying force in a straight line, however the engine is offset so this force is being applied at a 45 degree angle to the front of the train car. The engine has to apply greater force to start the train car to move. To understand this, you must realize that there are two forces being applied to the train car, one straight ahead and one at a 90-degree angle. To find the resultant force required for movement, you must apply your knowledge of right angle trigonometry. Since you only know the force required to move the train (1000 lbs.) and the angle of the force being applied (45°), you can solve for the resultant force by dividing 1000 lbs. by the cosine of the angle. This results in a force of approximately 1414 lbs. As you can see there is more force required to pull the train car at an angle than to pull it straight. The correction factor for the actual force pulling the train straight-ahead is the cosine of the angle. So, in the second illustration, the correction factor is cosine 45° = .707. This means that only 70.7% of the total force is used to pull the train straight-ahead. (1414) (.707) = 999.698 is the power factor, the fraction of the apparent power which is true power (KW).

This analogy can be related to AC power. If AC voltage is thought of as the force and AC current as the velocity, then the angle is the phase angle. The real power, thus, is the product of the power factor, the voltage and the current (for single phase). The apparent power is the product of voltage and current.

It should also be obvious that the apparent power is <u>not</u> the algebraic sum of P_T and P_R.

2.5 Generator Operation

2.5.1 Paralleling

Paralleling is the term used to describe the process of connecting a generator to an energized bus. At McGuire, we (OPERATIONS) parallel the Main Generator to the Grid (Switchyard) and the Emergency Diesel Generator(s) to its respective bus. The procedure, for performing this evolution, requires specific adjustment of voltage and speed (frequency), along with verification of proper phase alignment between the generator and bus (grid), to ensure transmission system compatibility. The consequences of not following this procedure could result in significant damage to the Main Generator, Emergency Diesel Generator(s), and/or local portions of the transmission system.

Objective # 6

Paralleling Procedure:

1. **When the turbine is at rated speed, the main generator excitation system is energized (started-up).**
2. **After the excitation system is energized, generator voltage is adjusted to be equal to or slightly greater than system voltage. (Volt meters for the generator and switchyard provide this indication).**
3. **A synchroscope is turned on and utilized to allow operator adjustment of generator speed *(frequency)* for proper alignment of the generator and grid phases. When the synchroscope is in the "12 o'clock" position, x, y, and z phases of the generator and grid are synchronized. (Adjustments are made with the speed control button)**
4. **Generator frequency *(speed)* is adjusted until the synchroscope is rotating "slowly" in the clockwise direction. This indicates a slightly higher frequency than the grid, which ensures that the generator will not reverse power when the generator output breakers are closed.**
5. **With the synchroscope rotating "slowly" in the clockwise direction, close the generator output breakers, such that, the breakers will close in when the synchroscope passes through the "12 o'clock" position.**
6. **Then load the generator based on the "Startup and Loading Requirements", as specified by procedure, to the desired amount of megawatt load.**

2.5.2 Single Source Operation

Objective # 7

When a generator is operating singularly to supply power, adjustment(s) of its controls will affect the following system parameters:

- **Adjustment of the generator excitation system will affect bus voltage, which also affects system (grid) voltage. However, adjusting generator voltage <u>does not affect</u> system reactive power and power factor. System load determines reactive load and power factor.**
- **Adjusting generator frequency <u>only</u> affects system frequency.**

2.5.3 Parallel Operation

Objective # 7

When paralleled to the grid, a generator is actually in parallel with every other generator on that system. This mode of operation is the normal operating mode for our Main Generator, however, it causes different results when adjustments are made to the generator's controls.

- **System or bus voltage is controlled by the combination of many generator excitation systems. Adjusting generator voltage at McGuire does change system voltage *(somewhat)* but it primarily affects total system reactive load or volt-amps reactive (VAR's) carried by the Main Generator. Reactive power is produced by the differences in potential between different generators in parallel.**

  The effect of raising generator voltage is a reduction in power factor (PF) away from unity, and an increase in VAR's.

  The effect of decreasing generator voltage is an increase in PF toward unity, and a decrease in VAR's. However, should generator voltage be reduced too far, PF can go leading and VAR's increase.

- **Adjusting turbine control valve position does not change frequency but does change the portion of the system Megawatt load carried by the unit generator. Opening valves more increases generator load. Closing valves more decreases generator Megawatt load. Turbine generator speed is electrically "locked in" to the frequency of the grid, due to parallel operation.**

- **The amount of reactive power (VAR's) on the system is determined by:**
  - **(1) The reactive power associated with the customer's loads *(inductive versus resistive versus capacitive loads).***
  - **(2) The voltage settings of the different generators, throughout the transmission system, determines how much reactive power is carried by each generator.**

The following table is provided to demonstrate how changes to voltage and frequency affect various Generator Parameters during Single Source and/or Parallel Operation.

Single Source Operation			**Parallel Operation**		
	Voltage	**Gov.**		**Voltage**	**Gov.**
Voltage	Change	Same	Voltage	Change	Same
Current			Current		
$P_A = IE\sqrt{3}$	Change	Change	$P_A = IE\sqrt{3}$	Change	Change
$P_T = IE\sqrt{3}pf$	Same	Same	$P_T = IE\sqrt{3}pf$	Same	Change
$P_R = IE\sqrt{3}(1-pf)$			$P_R = IE\sqrt{3}(1-pf)$	Change	Same
Frequency	Same	Change	Frequency	Same	Same
$P_T = IE\sqrt{3}pf$	Same	Same	$P_T = IE\sqrt{3}pf$	Same	Change
$P_A = IE\sqrt{3}$	Change	Change	$P_A = IE\sqrt{3}$	Change	Change
$P_R = IE\sqrt{3}(1-pf)$	Change	Change	$P_R = IE\sqrt{3}(1-pf)$	Change	Same
Reactive Power	Change	Same	Reactive Power	Change	Same
$P_R = \sqrt{P_A^2 - P_T^2}$					
$P_R = IE\sqrt{3}(1-pf)$					

2.6 Motors Review

2.6.1 Introduction

The electric motor works on the opposite principle of the electric generator. The electric generator converts mechanical energy to electrical energy, but an electric motor converts electrical energy to mechanical energy.

Two terms that you are familiar with from your study of electrical generators are stator and rotor. These two terms are also used extensively in our discussion of electrical motors. Recall that the stator is the stationary part of the motor attached to the source and the rotor is the part of the motor that rotates and is attached to the load.

Examination Outline Cross-reference:	Level	RO	SRO
	Tier #	1	
	Group #	1	
	K/A #	057 AA2.06	
	Importance Rating	3.2	

Ability to determine and interpret the following as they apply to the Loss of Vital AC Instrument Bus: AC instrument bus alarms for the inverter and alternate power source

Proposed Question: Common 51

Given the following conditions:

- The unit is at 100% power.
- Instrument Bus 1EKVA is aligned to 1KRP.
- The following alarm is received in the control room:
  - 1AD-11, H-5, 120 VAC REG PWR KRP TROUBLE

Which ONE (1) of the following describes the status of Instrument Bus 1EKVA?

A. De-energized because 1KRP is de-energized; 1EKVA must be transferred back to 1EVIA to re-energize.

B. Energized from 1KRP; 1KRP automatically transferred to its alternate source.

C. De-energized because 1KRP is de-energized; 1KRP must be manually transferred to alternate source.

D. Energized from 1EVIA; 1EKVA automatically transferred to inverter power when KRP was de-energized.

Proposed Answer: B

Explanation (Optional):

A is incorrect. 1KRP would transfer to its alternate supply if the only alarm is the one presented. Credible because this would be the first alarm lit if 1KRP was de-energized

B is Correct.

C is incorrect. 1KRP is auto transfer. 1EVIA is manual transfer. With only 1 alarm in, 1KRP has already automatically transferred

D is incorrect. 1EVIA is manually transferred between 1KRP and inverter. Credible because one portion of the system does have auto transfer, but not this portion

Technical Reference(s): EL-EPL pg 27,29 (Attach if not previously provided)
ARP 1AD-11-H5

Proposed references to be provided to applicants during examination: None

Learning Objective: EL-EPL Obj 17 (As available)

Question Source: Bank # _____
Modified Bank # _____ (Note changes or attach parent)
New X

Question History: Last NRC Exam _____

Question Cognitive Level: Memory or Fundamental Knowledge _____
Comprehension or Analysis X

10 CFR Part 55 Content: 55.41 7
55.43 _____

Comments:

	OBJECTIVE	NLO	NLOR	LPRO	LPSO	LOR
11	Describe the major difference between using the Standby Battery Charger during an equalizing charge and during standby service as a battery charger.	X	X	X	X	X
12	State the duty-cycle requirements, assumed within our safety analysis (UFSAR), associated with each 125 VDC Battery for the Vital Instrumentation and Control Power System.	X	X	X	X	X
13	Describe the purpose of the DC Tie Breakers associated with DC Distribution Centers; EVDA and EVDC, EVDB and EVDD.	X	X	X	X	
14	Explain how the 125 VDC and the 120 VAC Vital Instrumentation and Control Power Systems are interconnected.	X	X	X	X	
15	Describe operation of the Manual Transfer Switch associated with the Static Inverters for the Vital Instrumentation and Control Power System.	X	X	X	X	X
16	Describe any of the Kirk-Key Interlocks associated with the 120 VAC Vital Instrumentation and Control Power System and state the purpose of the Kirk-Key arrangement.	X	X	X	X	X
17	Describe operation of the "Auto Transfer Switch" associated with 1KRP and 2 KRP (Regulated Power Distribution Centers).	X	X	X	X	X

2.4 120VAC Vital Instrumentation and Control Power System

Objective # 14

Each unit's 120 VAC Vital Instrumentation and Control Power System normally receives power from the 125 VDC Vital Instrumentation and Control Power System through static inverters, 1(2)EVIA, 1(2)EVIB, 1(2)EVIC and 1(2)EVID, and their respective manual transfer switch (when in the "Inverter to Load" position).

Two static inverters are fed from each independent 125V DC distribution center. Each static inverter provides power to one of the eight AC power panelboards (1EKVA, 1EKVB, 1EKVC, 1EKVD, 2EKVA, 2EKVB, 2EKVC, and 2EKVD). Four Distribution Centers (EVDA, EVDB, EVDC and EVDD) supply four channels of power which are shared between the two units (Units 1 & 2 EVIA fed from distribution center EVDA and etc.).

Objective # 15

A manual transfer switch (also called manual bypass switch), associated with each static inverter, allows power transfer from the respective inverter to an alternate regulated power source (1KRP or 2KRP) during a loss of inverter. Because the manual transfer switch is a "make before break" switch, with overlapping contacts, transfer of the power source can be accomplished without an interruption of power.

This alternate regulated power supply (1KRP for Unit 1 and 2KRP for Unit 2) will allow an uninterruptible manual transfer of power to only one of the four unit associated AC power panelboards (1EKVA, 1EKVB, 1EKVC, or 1EKVD for Unit 1 and 2EKVA, 2EKVB, 2EKVC, or 2EKVD for Unit 2).

Objective # 16

A Kirk-Key Interlock scheme is provided on all four feeder breakers, of the regulated power supply (1KRP or 2KRP), such that only one breaker may be closed at a time. ***This interlock prevents:***

1. ***The operator from supplying both Train A and Train B from a single power source***
2. ***The loss of two instrument and control channels from the failure of one power source***

1KRP receives its power from two shared MCCs (SMXT or SMXY) through voltage regulators 1VRA or 1VRB and its associated transformer.

2KRP receives its power from two shared MCCs (SMXW or SMXU) through voltage regulators 2VRA or 2VRB and its associated transformer.

Both of these power supplies, 1KRP and 2KRP, are located in the Vital I&C Battery Room on the south outside wall of the EVCB and EVCD Battery Rooms, between the accesses to Battery Chargers EVCB and EVCD (1KRP is on the Unit 2 side and 2KRP on the Unit 1 side). Several plant transients, including a reactor trip, have been attributed to the operator manipulating the wrong unit's KRP during Vital Inverter Startup / Shutdown operation.

Objective # 17

An automatic transfer switch will transfer the incoming power from one MCC to the other on a loss of power. Once an automatic transfer has taken place an operator must locally (at the respective unit's KRP distribution center) make a manual transfer back to the normal power source (1VRA for Unit 1 / 2VRB for Unit 2).

This system provides four independent channels for instrumentation and control power to both Unit 1 and Unit 2 (the A Train loads are fed from channels A and C while the B Train loads are fed from channels B and D). Three of the four channels ensure that the overall system functional capability is maintained, comparable to the original design standards for safe operation, however, a loss of any two of these sources will result in a reactor trip or forced reactor shutdown (Technical Specifications) of the unit.

2.5 Instrumentation and Control

Objective # 18

The following indications and controls are provided:

2.5.1 Battery Chargers:

- DC amps (upstream of the output breaker / 0-750 amps)
- DC volts (upstream of the output breaker / 0-200 VDC))
- Equalizer timer (sets the equalizer charge time interval / 0-100 hours and will automatically return the charger to the "float" charge upon time-out)
- "Float" green light (indicates the charger in the float charge mode)
- "Equalize" amber light (indicates the charger in the equalizer charge mode)
- "AC Power Failure" red light (indicates a loss of AC power)
- "Low DC Voltage" red light (indicates a low output voltage condition)
- "High DC Voltage" red light (indicates a high output voltage condition)
- "High DC Shunt Trip" red light (indicates that a high output voltage condition has resulted in disconnection of the charger from its AC source, charger AC input breaker open)

<u>Note</u>: Blocking diode circuitry within the charger will prevent the battery from discharging through the battery charger.

- "Fan Failure" red light (indicates that one or more fans, within the charger housing, have failed)
- "Charger Failure" red light (indicates a charger failure has occurred, like # 7-10 above and other failures, such as a capacitor failure)
- Float Potentiometer (allows adjustment of the float voltage by IAE)
- Equalize Potentiometer (allows adjustment of the equalize voltage by IAE)
- Float / Equalize Toggle Switch (toggle switch for placing the charger unit in the float or equalize charging mode; this switch is also provide with a cover to prevent accidental operation)

Nomenclature: **120 VAC REG PWR KRP TRBL** Window: **H5**

Setpoint: Local alarm actuated

Origin: 1LAMP1 Panel Module 1LAM13

Probable Cause:
- Normal regulated power source failure
- Auto transfer switch on standby supply
- Regulated Power Panelboard (1KRP) undervoltage

Automatic Action: **IF** normal (SMXT) is lost and alternate (SMXY) is available, auto transfer from normal to alternate power supply.

Immediate Action:
1. **IF** loss of vital AC occurs, go to AP/1/A/5500/15 (Loss Of Vital Or Aux Control Power).
2. Send operator to 1LAMP1 to determine cause of alarm. (Battery Rm)

Supplementary Action:
1. Notify SRO.
2. **IF** auto transfer to alternate power supply has occured, refer to PT/1/A/4350/013 E (Regulated Power to 120V Vital AC Power System Auto Transfer Test) to swap back to normal power.

References:
- MC-1705-01
- MC-1759-09.04
- MC-1765-00.02
- MCEE-106.02-06

End Of Response

Examination Outline Cross-reference:	Level	RO	SRO
	Tier #	1	
	Group #	1	
	K/A #	058 G2.4.50	
	Importance Rating	3.3	

Emergency Procedures / Plan Ability to verify system alarm setpoints and operate controls identified in the alarm response manual.

Proposed Question: Common 52

Given the following:

- A BLACKOUT has occurred on 1ETA.
- D/G '1A' failed to start due to an 86N relay actuation.
- 1AD11-B4, BATTERY EVCA UNDERVOLTAGE is in alarm.
- EVDA bus voltage is 114 VDC and lowering slowly.

Which ONE (1) of the following describes the event that has occurred, and the action required to restore Bus EVDA In accordance with AP/1/A/5000/007, Loss of Electrical Power?

A. Loss of Battery Charger EVCA. Swap Battery Charger power supply to 2EMXA.

B. Loss of Battery Charger EVCA. Swap Battery Charger power supply to 1EMXH.

C. Loss of DC Bus EVDA. Swap Battery Charger power supply to 2EMXA.

D. Loss of DC Bus EVDA. Swap Battery Charger power supply to 1EMXH.

Proposed Answer: A

Explanation (Optional):

A is correct. With voltage lowering instead of 0, the charger has been lost. Procedure directs to swap to alternate supply, which is from Unit 2 in this case

A is incorrect. Correct effect, but wrong supply. Credible because this is the Train A backup supply to the swing charger

B is incorrect. Wrong effect but credible because this alarm would be in if the bus was lost. Power supply is correct.

D is incorrect. Wrong effect but credible for same reason as C. Power supply credible for same reason as B

Technical Reference(s): OP-MC-EL-EPL, pg 21, 23 (Attach if not previously provided)
1AD11-B4

Proposed references to be provided to applicants during examination: None

Learning Objective: OP-MC-EL-EPL Obj. 2, 9 (As available)

Question Source: Bank # _____
Modified Bank # X(ELEPLN04) (Note changes or attach parent)
New _____

Question History: Last NRC Exam _____

Question Cognitive Level: Memory or Fundamental Knowledge _____
Comprehension or Analysis X

10 CFR Part 55 Content: 55.41 10
55.43 _____

Comments:

CLASSROOM TIME (Hours)

NLO	NLOR	LPRO	LPSO	LOR
3.0	3.0	2.0	2.0	2.0

OBJECTIVES

	OBJECTIVE	NLO	NLOR	LPRO	LPSO	LOR
1	State the purpose of the 125 VDC and 120 VAC Vital Instrumentation and Control Power Systems.	X	X	X	X	
2	Draw a simplified composite of the 125 VDC and 120 VAC Vital Instrumentation and Control Power Systems as provided in Training Drawing 7.2, Simplified 125 VDC and 120 VAC Vital Instrumentation and Control Power Drawing.	X	X	X	X	
3	Provide a general description of the 125 VDC Vital Instrumentation and Control Power System.	X	X	X	X	
4	List the typical loads powered from the 125 VDC Vital Instrumentation and Control Power System Distribution Centers.	X	X	X	X	
5	Provide a general description of the 120 VAC Vital Instrumentation and Control Power System.	X	X	X	X	
6	List the typical loads powered from the 120 VAC Vital Instrumentation and Control Power System Power Panelboards.	X	X	X	X	
7	Describe the basis for the sizing (loading) of the battery charger associated with the 125 VDC Vital Instrumentation and Control Power System.	X	X	X	X	
8	Discuss the normal loading demands associated with the 125 VDC Battery Chargers for the Vital Instrumentation and Control Power System.	X	X	X	X	
9	Describe any of the Kirk-Key Interlocks associated with the 125 VDC Vital Instrumentation and Control Power System and state the purpose of the Kirk-Key arrangement.	X	X	X	X	X
10	Explain how the Standby Battery Charger is used during an equalizing charge of a 125 VDC Battery for the Vital Instrumentation and Control Power System.	X	X	X	X	X

Since EVCS (spare battery charger) is identical to the other chargers it can be used to replace a normal charger (as necessary) by closing the appropriate key interlocked circuit breakers.

Objective # 8

The load demands normally placed on each unit battery charger will consist of its respective DC distribution center loads, as well as, the loads of the associated DC panelboards while still providing a "floating charge" (132 ± 1 volt) on its respective battery.

Each charger receives power from one of two redundant 600 VAC Essential Auxiliary Power System Motor Control Centers (one power supply from a Unit 1 MCC and the other from a Unit 2 MCC). The chargers are manually connected to either one of these two power supplies through their respective charger connection box.

1(2) EMXA are the MCCs feeding the connection boxes for EVCA and EVCC, while the MCCs feeding the connection boxes for EVCB and EVCD are 1(2) EMXB.

Objective # 9

The charger connection box breakers for EVCA, EVCB, EVCC, and EVCD are Kirk-Key Interlocked to allow only one breaker to be closed at a time. ***This prevents tying a Unit 1 power source to a Unit 2 power source.***

Charger startup involves closing the DC output breaker to the Distribution Center then the charger AC input breaker. The control board operator will then start the battery charger by depressing the start push-button, located on 1MC-8 in the Control Room, which closes a set of "m" contacts, located at the 600 V MCC, and provides AC power to the battery charger via the charger connection box. Then the Charger DC output breaker is closed connecting the charger to the DC loads.

Charger shutdown requires the control board operator to depress the stop push-button, located on 1MC-8 in the Control Room, followed by opening of the charger DC output, AC input breaker and then the DC output breaker to the Distribution Center.

Objective # 10 & 11

The standby charger (EVCS) is used when one of the normal battery chargers is unavailable for service (standby mode) or during an "equalizing charge" to one of the batteries. The two feeder breakers, located at EVDS (distribution center for battery charger EVCS), provide proper alignment of the standby charger during its operation (standby mode or equalizing charge mode). The standby charger can supply the A Train Distribution Centers (EVDA or EVDC) or the B Train Distribution Centers (EVDB or EVDD). Kirk-Key Interlocks, provided with all of the associated breakers, ensure that only one train of distribution centers can be supplied, from EVDS, at a time.

In the standby mode of operation EVCS will replace the out-of-service battery charger. During this mode of operation the out-of-service battery charger is disconnected from its distribution center with the spare charger connected to the distribution center through one of the distribution center (EVDS) breakers, discussed above. In addition, the tie breaker to the distribution center with the out-of-service battery charger must be closed.

During the "equalizing charge" mode the normal battery charger is disconnected from its distribution center and will be aligned in parallel with its respective battery. The normal battery charger will be placed in "Equalize" mode of operation. Battery charger (EVCS) will then supply the distribution center with the tie breakers closed (cross-tied with its "sister" channel). This same alignment is utilized during normal charger maintenance and battery discharge testing. During these operations, the normal charger remains in the "Float" mode.

Objective # 9

As discussed above, the breakers, associated with standby battery charger EVCS are Kirk-Key Interlocked. Referencing Training Drawing 7.1, Composite Vital I/C Drawing, may help in your understanding of the interlocks described below:

- The breakers at distribution center EVDS are Kirk Key Interlocked with each other and their respective connection box (ECB5) such that:
    1) The A Train feeder breaker from 1EMXH in ECB5 cannot be closed unless the A Train supply breaker for EVDA or EVDC (located at distribution center EVDS) is closed. ***This prevents the A Train source from supplying the B Train buses.***
    2) The B Train feeder breaker from 2EMXH in ECB5 cannot be closed unless the B Train supply breaker for EVDB or EVDD (located at distribution center EVDS) is closed. ***This prevents the B Train source from supplying the A Train buses.***
    3) Only one breaker from EVDS can be closed at a time. ***This prevents the standby charger from supplying both A Train and B Train buses.***
- In addition, the supply breakers to ECB5 (Connection Box) from 1EMXH and 2 EMXH are Kirk-Key Interlocked to prevent closure of both breakers at the same time. ***This interlock scheme in conjunction with 1 & 2 above prevent cross connection of A & B Train AC sources and minimizes mutual exposure of the two trains.***

2.2. 125 VDC Vital Instrumentation and Control Power System Batteries

Both units (Unit 1 and 2) are provided with only four 125 VDC Vital Instrumentation and Control Power System batteries. Each battery consists of 60 total cells; with each cell packaged in a clear plastic, non-combustible, shock-absorbing container with the appropriate covers, racks, and accessories. The battery is connected to its respective DC distribution center, in parallel with its respective battery charger, and located in an individual and physically separate room within the main battery room.

7.2 Simplified 125 VDC/120 VAC Vital I&C Power Drawing (5-06-99)

Objective # 2

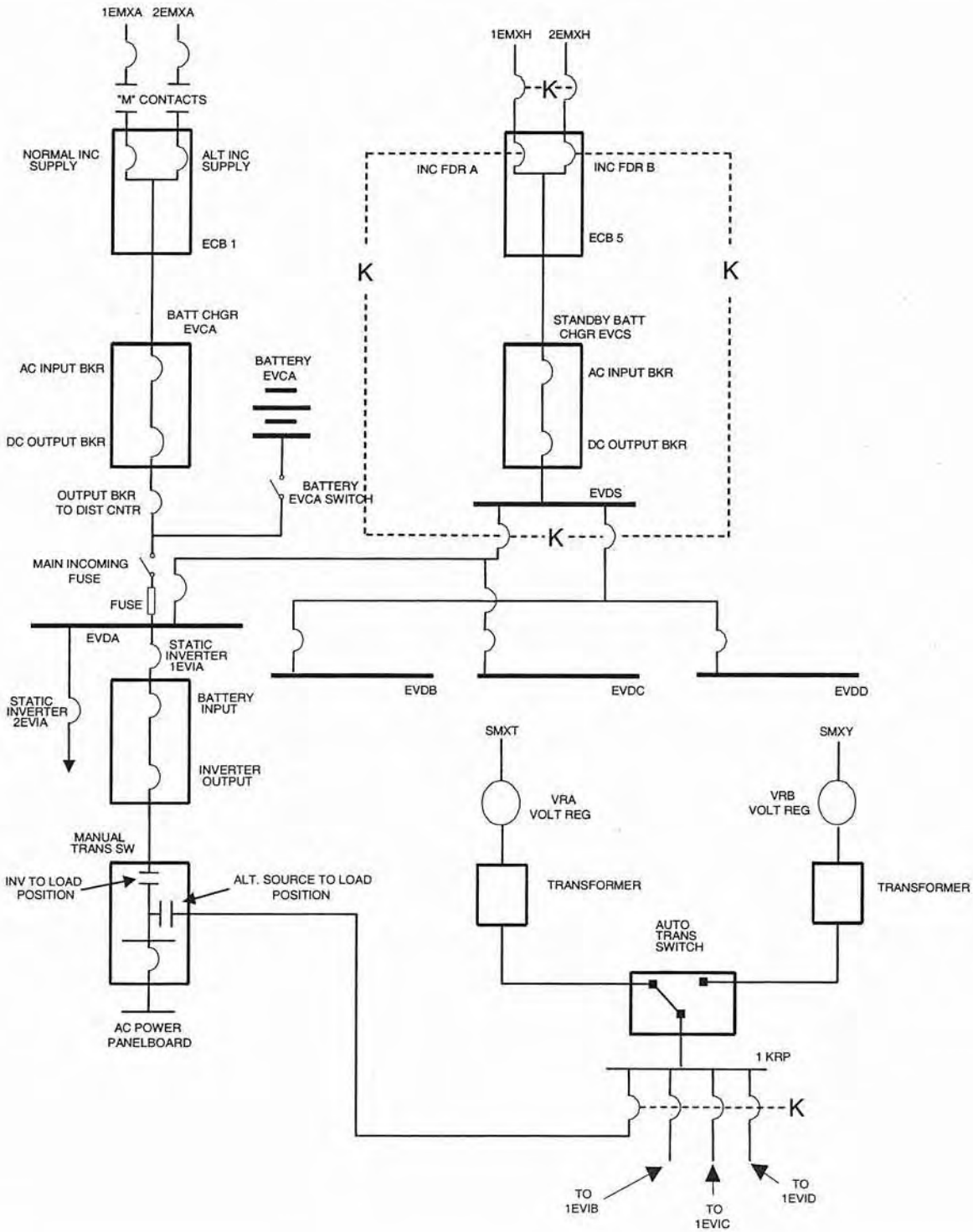

Nomenclature: **BATT EVCA UNDERVOLTAGE** Window: **B4**

Setpoint: 115 Volts

Origin: Undervoltage detector on Bus EVDA

Probable Cause:
- EVDA undervoltage detector malfunction
- Battery Charger malfunction
- Loss of DC input to EVDA

Automatic Action: None

Immediate Action:
1. **IF** Blackout has occured on 4160 Volt Bus supplying Batt Chgr EVCA, send operator to align battery charger to an energized bus per OP/0/A/6350/001 A (125 VDC/120 VAC Vital Instrument and Control Power), Enclosure 4.19 (Swapping Battery Charger 600V Supply Breaker at Charger Connection Box EVCA-EVCD).
2. Send operator to Distribution Center EVDA **AND** Batt Chgr EVCA to determine cause of alarm.
3. **IF** EVDA de-energized **OR** Batt Chgr EVCA malfunction, go to AP/1/A/5500/15 (Loss Of Vital Or Aux Control Power).

Supplementary Action:
1. Notify SRO.
2. Refer to Tech Specs.

References:
- Tech Specs
- UFSAR 8.3.2.1.4.2
- MC-1705-01
- MCEE-191-01
- MC-1715-07.00
- MC-1765-00.02
- MCRS-184-05.01

End Of Response

Unit 1

Examination Outline Cross-reference:	Level	RO	SRO
	Tier #	1	
	Group #	1	
	K/A #	062 AA1.05	
	Importance Rating	3.1	

Ability to operate and / or monitor the following as they apply to the Loss of Nuclear Service Water: The CCWS surge tank, including level control and level alarms, and radiation alarm

Proposed Question: Common 53

Given the following conditions:

- A loss of KC is occurring on Unit 1.
- The crew is performing actions of AP/1/A/5500/21, Loss of KC or KC System Leakage.
- KC Surge Tank Level has been going down at approximately 1 inch per minute.

Which ONE (1) of the following describes the expected response of the KC system instrumentation to this event if no action is taken?

A. KC Surge Tank Abnormal Level alarm will be received in the control room at 4.0 feet. KC Surge Tank Level Low-Low alarm will be received in the control room at 2.0 feet. KC Surge Tank radiation alarms are expected.

B. KC Surge Tank Abnormal Level alarm will be received in the control room at 4.0 feet. KC Surge Tank Level Low-Low alarm will be received on the OAC ONLY at 2.0 feet. KC Surge Tank radiation alarms are NOT expected.

C. KC Surge Tank Abnormal Low alarm will be received in the control room at 5.0 feet. KC Surge Tank Level Low-Low alarm will be received in the control room at 3.0 feet. KC Surge Tank radiation alarms are expected.

D. KC Surge Tank Abnormal Level alarm will be received in the control room at 5.0 feet. KC Surge Tank Level Low-Low alarm will be received on the OAC ONLY at 3.0 feet. KC Surge Tank radiation alarms are NOT expected.

Proposed Answer: B

Explanation (Optional):

B is correct.
A is incorrect. Radiation alarms would not be expected if level is going down; the leak would be out of the KC system. Credible because the levels are correct.
C is incorrect. Same as B for radiation alarms, but setpoints are incorrect; reasonable however, as the difference between the alarms is the same (2 feet)
D is incorrect. Correct for expectation of alarm; setpoints incorrect

Technical Reference(s): PSS-KC, pg 35 (Attach if not previously provided)

Proposed references to be provided to applicants during examination: None

Learning Objective: PSS-KC Obj 8 (As available)

Question Source: Bank # _____
Modified Bank # _____ (Note changes or attach parent)
New X

Question History: Last NRC Exam _____

Question Cognitive Level: Memory or Fundamental Knowledge X
Comprehension or Analysis _____

10 CFR Part 55 Content: 55.41 7
55.43 _____

Comments:

CLASSROOM TIME (Hours)

NLO	NLOR	LPRO	LPSO	LOR
2.0	2.0	2.0	2.0	2.0

OBJECTIVES

	OBJECTIVE	NLO	NLOR	LPRO	LPSO	LOR
1	State the purpose of the Component Cooling System.	X	X	X	X	
2	Draw the Component Cooling System per drawing 7.2.	X	X	X	X	
3	List the loads cooled by the Component Cooling System.	X	X	X	X	
4	Describe the operation (including any auto-alignments) of the Component Cooling System during the following modes:					
	• Normal Operation	X	X	X	X	
	• Following Blackout, Safety Injection, Phase A, Phase B Isolation and EMF actuation.	X	X	X	X	X
5	Describe the automatic action(s) that occur if Component Cooling flow from the thermal barriers goes high.	X	X	X	X	X
6	List the power supplies for the Component Cooling Pumps.	X	X	X	X	
7	Evaluate plant parameters and status indicators to determine any abnormal system conditions that may exist while performing inplant surveillance on the Component Cooling System.	X	X	X	X	
8	Evaluate plant parameters and status indicators to determine any abnormal system conditions that may exist.			X	X	X
9	Describe why caution must be taken when draining or venting the Component Cooling System (Corrosion Inhibitor).	X	X	X	X	X

KC pump mini flow valves open at < 1000 gpm and close at > 1500 gpm flow.

The NCP Thermal Barrier Isolation Valves will auto close to isolate the respective thermal barrier on a high flow (>60 gpm) due to a thermal barrier rupture.

The KC surge vent will auto close on a high radiation signal from EMF-46 (KC System EMF monitor).

The KC drain tank will auto start on a high level and auto stop on low level if pushbutton is in "AUTO".

3.2.5. Setpoints

- KC Surge Tank High Level Alarm is 7 ft, 2 in.
- KC Surge Tank Low Level Alarm is 4.0 ft.
- KC Surge Tank Low-Low Level Alarm is 2.0 ft. (OAC ONLY)
- NCDT Heat Exchanger outlet high flow is 250 gpm.
- NCP motor lower bearing outlet low flow is 2.5 gpm.
- NCP motor lower bearing outlet high flow is 9.5 gpm.
- NCP motor upper bearing outlet low flow is 135 gpm.
- NCP motor upper bearing outlet high flow is 180 gpm.
- The NCP thermal barrier isolation valve automatically close if flow increases to 60 gpm.

4.0 TECHNICAL SPECIFICATIONS

Objective #15

4.1. Tech Spec 3.7.6, Component Cooling Water System

5.0 INDUSTRY EVENTS

5.1 From November 1994 to January 1995, three through the wall leaks were identified on the Unit 2 Component Cooling Water System (KC). It is theorized that the leaks were caused by a form of stress cracking corrosion (SCC). The mechanism for this SCC is believed to be a biofilm/nitrate induced reaction. The term, biofilm, refers to a concentration of bacteria. Nitrates come from the oxidation of sodium nitrite, an additive to the normal chemical addition mixture added to the KC system.

As a result, Chemistry procedures were revised to limit the sodium nitrite concentration to below the threshold that would result in SCC.

Examination Outline Cross-reference:	Level	RO	SRO
	Tier #	1	
	Group #	1	
	K/A #	065 AK3.08	
	Importance Rating	3.7	

Knowledge of the reasons for the following responses as they apply to the Loss of Instrument Air: Actions contained in EOP for loss of instrument air

Proposed Question: Common 54

Which ONE (1) of the following describes the reason that AP/1/A/5500/022, Loss of Instrument Air, directs the crew to manually trip the reactor?

A. SG level control is lost.

B. SG pressure control is lost.

C. Pressurizer level control is lost.

D. Pressurizer pressure control is lost.

Proposed Answer: A

Explanation (Optional):

A is correct. On loss of SG level control, reactor is tripped

B is incorrect. SG pressure control would be regained by use of N2 accumulators to operate SG SM PORVs

C is incorrect. Level control would be manually controlled with Charging, as letdown would be isolated

D is incorrect. Pressure is manually controlled by use of heaters to ensure no PORV actuations. All distractors are credible because each of the functions must be manually controlled in this event

Technical Reference(s): AP-22 Basis Document pg 13 (Attach if not previously provided)

AP-22, pg 8-16

Proposed references to be provided to applicants during examination: None

Learning Objective: AP 22 Obj 3 (As available)

Question Source:	Bank #		
	Modified Bank #		(Note changes or attach parent)
	New	X	
Question History:	Last NRC Exam		
Question Cognitive Level:	Memory or Fundamental Knowledge	X	
	Comprehension or Analysis		
10 CFR Part 55 Content:	55.41	7,10	
	55.43		

Comments:

CLASSROOM TIME (Hours)

NLO	NLOR	LPRO	LPSO	LOR
		1.0	1.0	1.0

OBJECTIVES

	OBJECTIVE	NLO	NLOR	LPRO	LPSO	LOR
1	Explain the purpose for AP/22 (Loss of VI). AP22001			X	X	X
2	Analyze the mitigating strategy (major actions) contained in the procedure. AP22002			X	X	X
3	Given scenarios describing accident events and plant conditions, evaluate the basis for any caution, note, or step. AP22003			X	X	X
4	Given scenarios describing accident events and plant conditions, evaluate conditions which require application of continuous action steps. AP22004			X	X	X

ACTION/EXPECTED RESPONSE	RESPONSE NOT OBTAINED

NOTE CF Control Valves will fail closed on low VI pressure, which may result in AMSAC actuation and Lo Lo S/G level.

__ 12. **Check S/G levels - AT PROGRAMMED LEVEL.**	**IF S/G levels are going down in an uncontrolled manner, THEN:** __ a. Trip reactor. __ b. Continue with this procedure as time allows. __ c. **GO TO** EP/1/A/5000/E-0 (Reactor Trip or Safety Injection).
__ 13. **Check VI pressure - GREATER THAN 85 PSIG.**	**Align N_2 backup from CLAs to Pzr PORVs by opening the following valves:** __ • 1NI-430A (Emerg N2 From CLA To 1NC-34A) __ • 1NI-431B (Emerg N2 From CLA To 1NC-32B & 36B).
__ 14. **Check fuel movement - IN PROGRESS.**	__ **GO TO Step 16.**
__ 15. **Notify fuel handling SRO to perform the actions of Enclosure 10 (Fuel Handling Crew Actions during a Loss of VI).**	
__ 16. **Check Unit Status - IN MODE 3 OR 4.**	__ **Observe Note prior to Step 18 and GO TO Step 18.**

ACTION/EXPECTED RESPONSE	RESPONSE NOT OBTAINED

NOTE Steam drains fail open on loss of VI and can cause uncontrolled cooldown.

17. **Check NC temperatures:**

__ • **IF** any NC pump on, **THEN** check NC T-Ave - STABLE OR TRENDING TO 557°F.

OR

__ • **IF** all NC pumps off, **THEN** check NC T-Colds - STABLE OR TRENDING TO 557°F.

__ **IF temperature less than 557°F AND going down, THEN perform Enclosure 7 (Uncontrolled NC System Cooldown).**

NOTE RN flow is isolated to reactor bldg nonessential header (NC pumps) on loss of VI.

18. **Check the following valves - OPEN:**

__ • 1RN-252B (RB Non Ess Sup Cont Outside Isol)

__ • 1RN-277B (RB Non Ess Ret Cont Outside Isol).

__ **Monitor NC pump trip criteria on Foldout page.**

__ 19. **Check CA pumps - OFF.**

__ **IF CA flow goes up in an uncontrolled manner, THEN implement CA flow control criteria on Foldout page.**

NOTE
- Pzr heaters will energize if Pzr level is 5% greater than control setpoint.
- Pzr spray is not available on loss of VI.

20. **Operate Pzr heaters as required to:**

__ • Maintain Pzr liquid space temperature at Pzr vapor space temperature.

__ • Minimize opening of Pzr PORVs.

ACTION/EXPECTED RESPONSE	RESPONSE NOT OBTAINED
NOTE • 1NV-238 (Charging Line Flow Control) and 1NV-241 (Seal Inj Flow Control) fail open on loss of VI. • Normal and excess letdown isolate on loss of VI. Enclosure 8 (Pressurizer Level Control) contains actions to limit Pzr fill rate.	
__ 21. **Check Pzr level - AT PROGRAMMED LEVEL.**	__ **IF Pzr level going up in an uncontrolled manner, THEN control Pzr level PER Enclosure 8 (Pressurizer Level Control).**
__ 22. **Check VI pressure - LESS THAN 60 PSIG.**	**Perform the following:** __ a. **IF AT ANY TIME** VI pressure goes below 60 PSIG, **THEN** perform steps 23 through 29. __ b. **GO TO** Step 30.
23. **Check all RN pumps on both Units - RUNNING.** __ • 1A RN pump __ • 1B RN pump __ • 2A RN pump __ • 2B RN pump.	__ **GO TO Step 25.**

ACTION/EXPECTED RESPONSE	RESPONSE NOT OBTAINED
24. **Align B Train RN to SNSWP as follows:**	
__ a. Check B Train RN suction - ALIGNED TO LLI.	__ a. **GO TO** Step 25.
__ b. Notify Unit 2 Operator that B Train RN will be aligned to the SNSWP.	
c. Open the following valves:	
__ • 0RN-9B (Train 1B & 2B SNSWP Supply)	
__ • 0RN-152B (Train 1B & 2B Disch to SNSWP).	
d. Close the following valves:	
__ • 0RN-283AC (Train 1B & 2B Disch To RC)	
__ • 0RN-284B (Train 1B & 2B Disch To RC)	
__ • 0RN-10AC (Train 1B & 2B LLI Supply)	
__ • 0RN-11B (Train 1B & 2B LLI Supply)	
__ • 0RN-5B (Train 1B & 2B RC Supply).	
e. Close the following valves:	
__ • 1RN-41B (Train B To Non Ess Hdr Isol)	
__ • 1RN-43A (Train B To Non Ess Hdr Isol).	
f. Notify Unit 2 Operator to close the following valves:	
__ • 2RN-41B (Train B To Non Ess Hdr Isol)	
__ • 2RN-43A (Train B To Non Ess Hdr Isol).	

ACTION/EXPECTED RESPONSE	RESPONSE NOT OBTAINED
25. **Check KC pumps for runout as follows:**	
__ a. Check KC flow - LESS THAN 4000 GPM PER OPERATING KC PUMP.	**NOTE** • Both KC to KF control valves fail open on a loss of VI. • Control room KC outlet flow indication from the ND HXs fails low on a loss of VI. a. Perform one or more of the following as needed to reduce KC flow: • Dispatch operator to throttle KC to KF HXs while maintaining spent fuel pool temperature less than 140°F: __ • 1KC-148 (A KF Hx Inlet) (aux bldg, 750+10, MM-52, 20 ft north of door to 1A ND Hx room) __ • 1KC-155 (B KF Hx Inlet) (aux bldg, 750+8, MM-52, 20 ft north of door to 1A ND Hx room). __ • **IF** NC temperature is less than 200°F, **THEN** throttle KC to ND HX while maintaining NC temperature less than 200°F. (RNO continued on next page)

ACTION/EXPECTED RESPONSE	RESPONSE NOT OBTAINED
25. (Continued)	
	• **IF** NC temperature is between 200°F and 350°F **AND** throttling of KC is required, **THEN**: 1) Dispatch operator to monitor KC outlet flow for ND HX(s) in service: __ • RHR HX A OUTLET FLOW (1MKCFS5670) (aux bldg, 733+1, MM-54, across hall from Unit 2 BAT next to decon sink __ • RHR HX B OUTLET FLOW (1MKCFS5680) (aux bldg, 733+1, JJ-55, on west side of column JJ-55). 2) Throttle KC to ND HX(s) flow while: __ • Maintaining KC flow to ND HX greater than 2000 GPM as indicated on local gauge(s). __ • Maintain stable NC temperature. __ • Evaluate reducing other KC loads as required.
__ 26. **Check all MSIVs - CLOSED.**	__ **IF AT ANY TIME the reactor is tripped AND VI pressure is less than 60 PSIG, THEN close all MSIVs.**

ACTION/EXPECTED RESPONSE	RESPONSE NOT OBTAINED

27. **Evaluate aligning VG to VI:**

__ a. Check TSC - ACTIVATED.	a. Perform the following: __ 1) **IF AT ANY TIME** TSC is activated, **THEN** notify TSC to evaluate aligning VG to VI **PER** Step 27.b. __ 2) **GO TO** Step 28.
b. Contact TSC to evaluate the following:	

CAUTION **The following alignment requires starting the emergency D/G(s). If the D/G trips while in this alignment, restart capability of the D/G may be degraded since VG pressure may drop excessively prior to D/G restart.**

NOTE
- If VI will be restored within 1 hour, it may be quicker to concentrate on restoring normal VI supply instead of VG supply.
- Aligning VG to VI requires isolating normal VI supply to aux bldg essential headers.
- Control room capability to control CA flow, charging flow, and letdown should be restored in the next step.
- Aligning VG to VI may be a high priority if Pzr level is approaching water solid conditions.

__ 1) Evaluate supplying VI Aux Building Essential Headers using VG **PER** Enclosure 12 (Aligning VG to VI Aux Building Essential Headers).

2) **WHEN** Enclosure 12 (Aligning VG to VI Aux Building Essential Headers) is complete, **THEN** perform the following:

__ a) **REFER TO** Enclosure 13 (Unit 1 Valves Aligned to Blackout Air Supply) for a complete listing of valves aligned to the blackout headers.

__ b) Evaluate operating valves on restored headers.

ACTION/EXPECTED RESPONSE	RESPONSE NOT OBTAINED

28. **Perform the following to limit undesirable system transients that may result as instrument air is restored:**

a. Isolate BB as follows:

1) Close the following manual loaders:

__ • 1BB-123 (1A S/G Blowdown Throttle Control)

__ • 1BB-124 (1B S/G Blowdown Throttle Control)

__ • 1BB-125 (1C S/G Blowdown Throttle Control)

__ • 1BB-126 (1D S/G Blowdown Throttle Control).

__ 2) Stop BB pumps.

3) Close:

__ • 1BB-1B (1A S/G Blowdown Cont Outside Isol Control)

__ • 1BB-2B (1B S/G Blowdown Cont Outside Isol Control)

__ • 1BB-3B (1C S/G Blowdown Cont Outside Isol Control)

__ • 1BB-4B (1D S/G Blowdown Cont Outside Isol Control)

__ • 1BB-5A (A S/G BB Cont Inside Isol)

__ • 1BB-6A (B S/G BB Cont Inside Isol)

__ • 1BB-7A (C S/G BB Cont Inside Isol)

__ • 1BB-8A (D S/G BB Cont Inside Isol).

ACTION/EXPECTED RESPONSE	RESPONSE NOT OBTAINED
28. (Continued)	
__ b. Check CM/CF - PRESENTLY FEEDING ALL S/G'S.	__ b. For each S/G not being fed from CM/CF, place associated S/G CF control valve and bypass valve in manual and close.
c. Check the following valves - CLOSED:	__ c. Place TD CA pump in "START"
__ • 1SA-48ABC (SM From S/G C To TD CA Pump Isol)	
__ • 1SA-49AB (SM From S/G B to TD CA Pump Isol).	
__ d. Close manual loaders for all MSIV bypass valves.	
__ e. Check SM pressure on all S/Gs - LESS THAN OR EQUAL TO 1125 PSIG.	__ e. **IF** SM PORV has failed closed on S/G with SM pressure greater than 1125 PSIG, **THEN** close manual loader for failed SM PORV.
__ f. Check 1NV-238 (Charging Line Flow Control) - IN AUTO.	f. Perform the following:
	__ 1) **IF** 1NV-238 M/A station in manual and fully open, **THEN GO TO** Step 28.g.
	2) Perform one of the following to prevent 1NV-238 from inadvertently closing upon VI restoration:
	__ • Place 1NV-238 in auto.
	OR
	__ • **IF** 1NV-238 controlling properly in manual, **THEN** continue manual control while ensuring M/A station output stays above 0% at all times while in this procedure.

With respect to throttling closed NI-173 and -178, these valves have a seal-in circuit that will fully close the valve when it reaches 95% closed. However, it's possible that these valves may seal-in and close sooner (80-90% closed), due to the difficulty in setting up these valves during maintenance. If the valves inadvertently close, ND pump flow still exists through the 2-inch miniflow line.

If the ND pumps are cavitating, which could occur if ND flow is uncontrollably high, the ND pumps are stopped and the Operator is directed to AP-19 to deal with the loss of ND. AP22 will be performed as time allows.

The step also re-establishes NC temperature control, first by controlling ND bypass flow around the ND HXs via ND-18 or 33. Temperature is also adjusted by throttling KC to control ND discharge temperature. If NC temperature is greater than 200ºF, the potential exists to boil KC if it is throttled to a low flow rate, so direction is given to maintain KC flow to the ND Hx greater than 2000 GPM in this case.

REFERENCES:
Engineering letter attached to 50.59 for rev 17 of AP/1/A/5500/22 and rev 15 of AP/2/A/5500/22.

STEP 12:

PURPOSE:

Prompt the operators to watch S/G levels because the CF control valves fail closed on a loss of VI. If S/G levels can't be controlled, the Operator is directed to trip the reactor.

DISCUSSION:

The CF control valves use 0 – 60# valve operating air. Depending on the nature of the problem with VI and considering line losses, etc., these valves could start failing at 70# or more VI pressure as indicated in the control room. The operating philosophy regarding loss of Main Feedwater at power is to trip the reactor. This will prevent challenging the Lo-Lo S/G automatic reactor trip and will result in better initial conditions at the time of the manual trip. Refer to PIP 2-M-87-0208 where a automatic reactor trip occurred 5 min after loss of offsite power due to loss of VI to the CF valves. If the CF valves were to get to less than 25% open (for 30 sec or more) on 3 out of 4 S/Gs, an AMSAC could also be generated. For most scenarios, it's likely the operator will have manually tripped the reactor prior to this occurring.

REFERENCES:
PIP 2-M-87-0208

Examination Outline Cross-reference:	Level	RO	SRO
	Tier #	1	
	Group #	1	
	K/A #	E04 EK3.3	
	Importance Rating	3.8	

Knowledge of the reasons for the following responses as they apply to the (LOCA Outside Containment) Manipulation of controls required to obtain desired operating results during abnormal and emergency situations.

Proposed Question: Common 55

Given the following conditions:

- A LOCA outside containment has occurred.
- The crew is performing the actions in EP 1/A/5000/ECA-1.2, LOCA OUTSIDE CONTAINMENT.

Which ONE (1) of the following describes the FIRST components isolated and the indications used to determine if the leak has been isolated in accordance with ECA-1.2?

A. Low Pressure Injection is isolated first because it is the most likely break location; NC pressure is checked, because when the break is isolated, NV flow will repressurize the NC System.

B. Low Pressure Injection is isolated first because it is the most likely break location; NV flow is checked, because when the break is isolated, NV flow will be rapidly reduced.

C. High Pressure Injection is isolated first because of the piping stress on the line due to LOCA size; Pressurizer level is checked, because when the break is isolated, NC Inventory will rapidly rise.

D. High Pressure Injection is isolated first because of the piping stress on the line due to LOCA size; RVLIS indication is checked, because when the break is isolated, vessel head voiding will immediately be reduced.

Proposed Answer: A

Explanation (Optional):
A. Correct. NC pressure is the primary means of determining whether the leak is isolated, as well as visual observation of isolation.
B. Incorrect. NV flow will decrease rapidly, but is not checked in ECA-1.2
C. Incorrect. PZR level is checked, but High pressure lines are checked after low pressure lines
D. Incorrect. RVLIS may indicate 100% at the start, so may not provide indication of isolation at all

Technical Reference(s): ECA-1.2, pg 2-7 (Attach if not previously provided)
LP EP E-1, pg 229, 231

Proposed references to be provided to applicants during examination: None

Learning Objective: EP-E1, obj 3 (As available)

Question Source: Bank # X
Modified Bank # _____ (Note changes or attach parent)
New _____

Question History: Last NRC Exam VCS 2006 Retake

Question Cognitive Level: Memory or Fundamental Knowledge X
Comprehension or Analysis _____

10 CFR Part 55 Content: 55.41 10
55.43 _____

Comments:

CLASSROOM TIME (Hours)

NLO	NLOR	LPRO	LPSO	LOR
N/A	N/A	5.0	5.0	4.0

OBJECTIVES

SEQ	OBJECTIVE	NLO	NLOR	LPRO	LPSO	LOR
1	Explain the purpose for each procedure in the E-1 series. EPE1001			X	X	
2	Discuss the entry and exit guidance for each procedure in the E-1 series. EPE1002			X	X	
3	Discuss the mitigating strategy (major actions) of each procedure in the E-1 series. EPE1003			X	X	X
4	Discuss the basis for any note, caution or step for each procedure in the E-1 series. EPE1004			X	X	X
5	Given the Foldout page discuss the actions included and the basis for these actions. EPE1005			X	X	X
6	Given the appropriate procedure, evaluate a given scenario describing accident events and plant conditions to determine any required action and its basis. EPE1006			X	X	X
7	Discuss the time critical task(s) associated with the E-1 series procedures including the time requirements and the basis for these requirements. EPE1007			X	X	X

9.3. Major Actions

The recovery/restoration technique of ECA-1.2 includes the following three major action categories:

1. Verify proper valve alignment.
2. Identify and isolate the break.
3. Check if break is isolated.

The following subsections provide a more detailed discussion of each major category.

9.3.1 Verify Proper Valve Alignment

The first instruction given to the operator is to verify that all normally closed valves in low pressure lines that penetrate containment are closed. If a normally closed valve is open, this action may isolate the break.

9.3.2 Identify and Isolate Break

The operator then attempts to identify and isolate the break by sequentially closing all normally open valves in low pressure injection paths that penetrate containment.

9.3.3 Check if Break is Isolated

NC pressure is monitored to determine if the break has been isolated. A significant rise in NC pressure indicates the break is isolated and the operator is sent to E-1. If the break is not isolated, the operator transfers to procedure ECA-1.1 for further recovery actions.

9.4. Detailed Description of Procedural Steps

STEP 1 Check proper valve alignment:

PURPOSE: To ensure that normally closed valves are closed.

BASIS: This step instructs the operator to verify that all normally closed valves in low pressure lines and other MNS specified lines that penetrate containment are closed. The valving connecting the ND system to the NC is of particular interest in this step since the ND system is a low pressure system (600 psig) connected to the high pressure NC system (2500 psig). Therefore, a rupture or break outside containment is most probable to occur in the low pressure ND system piping.

STEP 2 Try to identify and isolate break:

PURPOSE: To attempt to identify and isolate a LOCA outside containment.

BASIS: This step instructs the operator to close and open all normally opened valves in paths that penetrate containment to identify and isolate the break outside containment. Again, as in Step 1, the valving connecting the 600 psig ND system to the NC is of primary interest, since the probability of a break occurring outside containment is most probable in this piping.

ERG substep is divided into three actions for clarity. Each flow path (valve) to be tested is isolated, pressure checked, and actions taken based on pressure response. This ensures only one isolation sequence is performed at a time and will provide details on when to reopen each valve.

When the NI valve to the cold legs is isolated, NI pump miniflow is ensured or the NI pumps are shutdown until after the valve is reopened.

STEP 3 Check if break is isolated:

PURPOSE: To determine if the LOCA outside containment has been isolated by previous actions.

BASIS: This step instructs the operator to check NC pressure to determine if the break has been isolated by previous actions. If the break is isolated, a significant NC pressure rise will occur due to the S/I flow filling up the NC with break flow stopped.

ACTION/EXPECTED RESPONSE	RESPONSE NOT OBTAINED

C. Operator Actions

__ 1. **Monitor Foldout page.**

2. **Dispatch operator to remove white tags and close the following breakers:**

__ • 1EMXA-R2A (1A ND To A&B Cold Legs Cont Outside Isol Motor (1NI-173A)) (aux bldg, 750, FF-54, FF-55)

__ • 1EMXA-R1E (Unit 1 NI To Cold Legs Cont Outside Isol Motor (1NI-162A)) (aux bldg, 750, FF-54, FF-55)

__ • 1EMXB1-6B (1B ND To C&D NC Cold Leg Cont Outside Isol Motor (1NI-178B)) (aux bldg, 733, GG-55, GG-56).

ACTION/EXPECTED RESPONSE	RESPONSE NOT OBTAINED
3. **Check if ND pumps should be stopped and isolated as follows:**	
__ a. Check NC pressure - GREATER THAN 286 PSIG.	a. Perform the following: __ 1) Contact station management to evaluate any actions to isolate potential leak. __ 2) **RETURN TO** procedure and step in effect.
__ b. ND pumps suction - ALIGNED TO FWST.	__ b. **GO TO** Step 6.
c. Check the following for indications of leak into ND System: • Abnormal ND temperatures on chart recorders: __ • ND to NC Cold Leg A and B temperature __ • ND to NC Cold Leg C and D temperature. __ • Abnormal ND System pressure.	
__ d. Check leak location - ON ND SYSTEM.	__ d. **IF** ND System has remained intact, **THEN GO TO** Step 6.
__ e. Check any ND pump - ON.	__ e. **GO TO** Step 4.d.

ACTION/EXPECTED RESPONSE	RESPONSE NOT OBTAINED

4. **Stop ND pumps and isolate potential FWST depletion path as follows:**

__ a. Reset S/I.

__ b. Reset Sequencers.

__ c. Stop both ND pumps.

d. Close the following valves:

__ • 1ND-19A (A ND Pump Suct From FWST or NC)

__ • 1ND-4B (B ND Pump Suct From FWST or NC)

__ • Enable power disconnect and close 1FW-27A (FWST Supply To ND).

NOTE

- ND relief valves go to PRT. If relief valves are also open, this may lead to NS actuation. NS must be secured if loss of inventory is occurring both inside and outside containment to conserve FWST inventory.
- The next step takes priority over steps that start NS pumps in EP/1/A/5000/FR-Z.1 (Response To High Containment Pressure), even after exiting this EP. FR-Z.1 should not be implemented while in this procedure.

5. **IF AT ANY TIME NS actuates, AND NS suction is aligned to FWST, THEN operate NS pumps as follows:**

• **WHEN** containment pressure is less than 10 PSIG, **THEN** ensure both trains of NS are off as follows:

__ a. Reset Containment Spray.

__ b. Stop both NS pumps.

__ • **WHEN** containment pressure is greater than 10 PSIG, **THEN** operate one NS pump.

ACTION/EXPECTED RESPONSE	RESPONSE NOT OBTAINED
6. **Check proper valve alignment as follows:**	
a. Valves in ND pump suction from NC System - CLOSED:	a. Perform the following:
__ • 1ND-1B (C NC Loop to ND Pumps)	__ 1) Dispatch operator to remove white tag and close breaker for valve(s).
__ • 1ND-2AC (C NC Loop To ND Pumps).	__ 2) Close valve(s).
	3) **IF** valve can not be closed, **THEN** dispatch operator to close valve(s):
	__ • 1ND-1B (reactor bldg, 725+30, 182 Degrees, above lower containment charcoal filter 1B)
	__ • 1ND-2AC (reactor bldg, 738+5, 180 Degrees, B and C fan room).
__ b. 1NI-183B (ND To B & C Hot Legs Isol) - CLOSED.	b. Perform the following:
	__ 1) Dispatch operator to remove white tag and close breaker for valve.
	__ 2) Close valve.
	__ 3) **IF** valve can not be closed, **THEN** dispatch operator to close 1NI-183B (aux bldg, 733+10, FF-52, room 602, midget hole, enter from electrical penetration room, 4 ft from reactor bldg wall, 3 ft from ceiling).

ACTION/EXPECTED RESPONSE	RESPONSE NOT OBTAINED
6. (Continued)	
c. NI pump hot leg injection valves - CLOSED: __ • 1NI-121A (Train A NI To B & C Hot Leg) __ • 1NI-152B (Train B NI To A & D Hot Leg).	c. Perform the following: __ 1) Dispatch operator to remove white tag and close breaker for valve(s). __ 2) Close valve(s). 3) **IF** valve(s) can not be closed, **THEN** dispatch operator to close valve(s): __ • 1NI-121A (aux bldg, 716+23, FF-52, room 602, 10 ft north of CAD door, 3 ft from reactor bldg wall) __ • 1NI-152B (aux bldg, 750+4, HH-52, southwest corner of UHI valve room, 1 ft from reactor bldg).
__ d. 1NV-840A (ND To Pzr Aux Spray Control)- CLOSED.	d. Perform the following: __ 1) Close valve. __ 2) **IF** valve can not be closed, **THEN** dispatch operator to close 1NV-840A (aux bldg, 733+8, KK-53, room 732, west of NS heat exchanger room 1B).
__ e. **IF** NC System leak is known to be isolated by actions taken in Step 6, **THEN GO TO** EP/1/A/5000/E-1 (Loss Of Reactor Or Secondary Coolant).	

ACTION/EXPECTED RESPONSE	RESPONSE NOT OBTAINED

NOTE

- 1NI-173A (Train A ND To A & B CL) and 1NI-178B (Train B ND To C & D CL) may not fully close if NC pressure is above 450 PSIG. These valves may indicate closed with valve still 20% open.
- Since ND trains are cross-tied, a check valve failure on one ND discharge line can affect either ND train.
- If NC System is saturated, NC pressure may not be a good diagnostic of leak isolation. NC pressure will respond very slowly after leak is isolated, or may continue to drop if cooldown is in progress, until subcooling is restored.

7. **Try to identify and isolate break as follows:**

a. Check the following for indications of leak into ND System:

- Abnormal ND temperatures on chart recorders:

__ • ND to NC Cold Leg A and B temperature

__ • ND to NC Cold Leg C and D temperature.

__ • Abnormal ND System pressure.

__ b. Check leak location - ON ND SYSTEM.

__ b. **IF** ND System has remained intact, **THEN GO TO** Step 7.f to isolate potential leak on NI System.

c. Do not continue until breakers for the following valves are closed:

__ • 1NI-173A (Train A ND To A & B CL)

__ • 1NI-178B (Train B ND To C & D CL).

d. Close the following valves:

__ • 1NI-173A (Train A ND To A & B CL)

__ • 1NI-178B (Train B ND To C & D CL).

__ e. **GO TO** Step 8.

Examination Outline Cross-reference:	Level	RO	SRO
	Tier #	1	
	Group #	1	
	K/A #	E12 EA1.2	
	Importance Rating	3.6	

Ability to operate and / or monitor the following as they apply to the (Uncontrolled Depressurization of all Steam Generators) Operating behavior characteristics of the facility.

Proposed Question: Common 56

Given the following conditions:

- EP 1/A/5000/ECA-2.1, Uncontrolled Depressurization of All Steam Generators is being performed.
- The crew has reduced CA flow to all steam generators (SG) to minimum as they continue attempts to isolate the SGs.

Which ONE (1) of the following describes the expected plant response to the CA flow reduction and what actions are to be taken as SG pressures decrease?

A. NC System hot leg temperatures will eventually begin to increase due to reduction of SG inventory and the crew will then transition to FR-H.1, Response to Loss of Secondary Heat Sink.

B. NC System hot leg temperatures will eventually begin to increase due to reduction in SG inventory and the crew will then raise CA flow while continuing in ECA-2.1, Uncontrolled Depressurization of All Steam Generators.

C. The SGs will eventually become completely depressurized due to inadequate secondary heat sink and the crew will then transition to E-2, Faulted Steam Generator Isolation.

D. The SGs will eventually become completely depressurized due to inadequate secondary heat sink and the crew will then transition to FR-H.1, Response to Loss of Secondary Heat Sink.

Proposed Answer: B

Explanation (Optional):
B. Correct. When CA flow is reduced, eventually hot leg temperatures will rise when SG inventory is depleted. The purpose of minimizing CA flow is to minimize NC System cooldown and inventory loss. FR-H.1 conditions are not met because the CA flow reduction was controlled by the crew
A. Incorrect. ECA-2.1 must be performed to completion unless a SG is isolated or tubes rupture.
C. Incorrect. The SGs depressurize as long as they are faulted, but transition to E-2 is only performed when 1 SG repressurizes.
D. Incorrect. (see A).

Technical Reference(s): ECA-2.1, pg 11, 30, 47 (Attach if not previously provided)
FRH-.1, pg 2

Proposed references to be provided to applicants during examination: None

Learning Objective: ECA-2.1 Obj 3 (As available)

Question Source: Bank # X
Modified Bank # _____ (Note changes or attach parent)
New _____

Question History: Last NRC Exam VCS 2006 Retake

Question Cognitive Level: Memory or Fundamental Knowledge _____
Comprehension or Analysis X

10 CFR Part 55 Content: 55.41 10
55.43 5

Comments:

CLASSROOM TIME (Hours)

NLO	NLOR	LPRO	LPSO	LOR
N/A	N/A	.75	.75	.75

OBJECTIVES

SEQ	OBJECTIVE	NLO	NLOR	LPRO	LPSO	LOR
1	Explain the purpose for each procedure in the E-2 series. EPE2001			X	X	
2	Discuss the entry and exit guidance for each procedure in the E-2 series. EPE2002			X	X	
3	Discuss the mitigating strategy (major actions) of each procedure in the E-2 series. EPE2003			X	X	X
4	Discuss the basis for any note, caution or step for each procedure in the E-2 series. EPE2004			X	X	X
5	Given the Foldout page discuss the actions included and the basis for these actions. EPE2005			X	X	X
6	Given the appropriate procedure, evaluate a given scenario describing accident events and plant conditions to determine any required action and its basis. EPE2006			X	X	X

ACTION/EXPECTED RESPONSE	RESPONSE NOT OBTAINED
5. **Control feed flow as follows:**	
__ a. Check all S/G N/R levels - GREATER THAN 11% (32% ACC).	__ a. Maintain a minimum feed flow of 25 GPM to any S/G with a N/R level less than 11% (32% ACC).
__ b. Check cooldown rate in NC T-Colds - LESS THAN 100°F IN AN HOUR.	b. Perform the following: __ 1) Reduce feed flow to 25 GPM to each S/G. __ 2) **GO TO** Step 5.d.
__ c. Check N/R level in all S/Gs - LESS THAN 50%.	__ c. Throttle feed flow to maintain N/R level less than 50% in all S/Gs.
__ d. Check NC T-Hots - STABLE OR GOING DOWN.	__ d. Throttle feed flow or dump steam to stabilize temperatures.
__ 6. **Check NC subcooling based on core exit T/Cs - GREATER THAN 0°F.**	__ **IF at least one NV OR NI pump on, THEN stop all NC pumps, while maintaining seal injection flow.**
__ 7. **Monitor CA suction sources on Foldout page.**	

ACTION/EXPECTED RESPONSE	RESPONSE NOT OBTAINED

NOTE NC pump trip criteria on Foldout page (based on subcooling) no longer applies.

__ 25. **Check all NC T-Hots - STABLE OR GOING DOWN.**	__ **Throttle feed flow or dump steam to stabilize NC T-Hots.**
__ 26. **Check N/R level in all S/Gs - LESS THAN 50%.**	__ **Throttle feed flow to maintain N/R level less than 50% in all S/Gs.**

1. **NC Pump Trip Criteria:**

   - **IF** the following conditions are satisfied, **THEN** trip all NC pumps while maintaining seal injection flow:
     - At least one NV or NI pump - ON
     - NC subcooling based on core exit T/Cs- LESS THAN OR EQUAL TO 0°F.

2. **S/I Reinitiation Criteria:**

   - **IF** NC subcooling based on core exit T/Cs is less than 0°F **OR** Pzr level can not be maintained greater than 11% (29% ACC), **THEN** start S/I pumps and realign NV S/I flow path (suction, discharge, isolate normal charging) as necessary to restore subcooling and level.

3. E-2 Transition **Criteria:**

   - **IF** any S/G pressure goes up **AND** S/I termination in Steps 15 through 24 is not in progress, **THEN GO TO** EP/1/A/5000/E-2 (Faulted Steam Generator Isolation).

4. **SGTR Transition Criteria:**

   - **IF** any S/G level goes up in an uncontrolled manner **OR** any S/G has abnormal radiation, **THEN GO TO** EP/1/A/5000/E-3 (Steam Generator Tube Rupture).

5. **Cold Leg Recirc Switchover Criteria:**

   - **IF** FWST level reaches 180 inches ("FWST LEVEL LO" alarm), **THEN GO TO** EP/1/A/5000/ES-1.3 (Transfer To Cold Leg Recirculation).

6. **CA Suction Sources:**

   - **IF** CA Storage Tank (water tower) goes below 1.5 ft, **THEN** perform EP/1/A/5000/G-1 (Generic Enclosures), Enclosure 20 (CA Suction Source Realignment).

7. **Position Criteria for 1NV-150B and 1NV-151A (NV Pumps Recirculation):**
   - **IF** NV S/I flowpath aligned **AND** NC pressure is less than 1500 PSIG, **THEN** close 1NV-150B and 1NV-151A.
   - **IF** NC pressure is greater than 2000 PSIG, **THEN** open 1NV-150B and 1NV-151A.

ACTION/EXPECTED RESPONSE	RESPONSE NOT OBTAINED

C. Operator Actions

__ 1. **IF total feed flow is less than 450 GPM due to operator action, THEN RETURN TO procedure and step in effect.**

CAUTION **If a non-faulted S/G is available, then feed flow should only be established to non-faulted S/G(s) in subsequent steps.**

2. **Check if secondary heat sink is required:**

__ a. NC pressure - GREATER THAN ANY NON-FAULTED S/G PRESSURE.	__ a. **RETURN TO** procedure and step in effect.
__ b. Any NC T-Hot - GREATER THAN 350°F (347°F ACC).	b. Perform the following while continuing in this procedure: 1) Try to place ND in RHR mode: __ a) Ensure NC pressure is less than 385 PSIG. __ b) **IF** S/I has occurred, **THEN** place ND in RHR mode **PER** EP/1/A/5000/G-2 (Placing ND In RHR Mode). __ c) **IF** S/I has not occurred, **THEN** place ND in RHR mode **PER** Enclosure 2 (Placing ND in RHR mode). __ 2) **WHEN** adequate ND cooling is established, **THEN RETURN TO** procedure and step in effect.

__ 3. **Monitor Foldout Page.**

Examination Outline Cross-reference:	Level	RO	SRO
	Tier #	1	
	Group #	2	
	K/A #	003 AK3.07	
	Importance Rating	3.8	

Knowledge of the reasons for the following responses as they apply to the Dropped Control Rod: Tech-Spec limits for T-ave

Proposed Question: Common 57

The unit is at 11% power during a plant startup prior to synchronizing the Main Generator to the grid.

ONE (1) Control Group C rod drops to the bottom of the core.

Tave indicates the following:

- Loop A – 550 deg F
- Loop B – 551.5 deg F
- Loop C – 551.5 deg F
- Loop D – 550 deg F

Which ONE (1) of the following describes the condition of the reactor and the action required?

Minimum Temperature for Criticality…

A. Has been exceeded. Place the plant in Mode 2 with Keff <1.0 within 30 minutes because MTC may no longer be within the analyzed range for accident analysis.

B. Has been exceeded. Restore temperature within 1 hour or be in Mode 2 with Keff <1.0 within the following 30 minutes because MTC may no longer be within the analyzed range for accident analysis.

C. Will be exceeded if one more loop Tave goes below the limit. Trip the reactor and enter E-0, Reactor Trip or Safety Injection, because the turbine is not available to stabilize NC System temperature.

D. Will be exceeded if one more loop Tave goes below the limit. Stabilize Tave in accordance with AP/1/A/5500/014, Rod Control Malfunction. Recover the rod to prevent power distribution limits from being exceeded.

Proposed Answer: A

Explanation (Optional):

A correct

B incorrect. Correct effect but there is no allowance for 1 hour prior to shutdown.

C incorrect. Any Tave below the limit is outside the LCO. Credible because normal mode of temperature stabilization is with turbine.

D incorrect. Any Tave below the limit is outside the LCO. If Tave was not exceeded, this could be a correct answer.

Technical Reference(s): TS 3.4.2 and basis (Attach if not previously provided)

Proposed references to be provided to applicants during examination: None

Learning Objective: PS-NC, Obj 24 (As available)

Question Source: Bank # ____

Modified Bank # ____ (Note changes or attach parent)

New X

Question History: Last NRC Exam ____

Question Cognitive Level: Memory or Fundamental Knowledge ____

Comprehension or Analysis X

10 CFR Part 55 Content: 55.41 10

55.43 2

Comments:

OBJECTIVES

	OBJECTIVE	NLO	NLOR	LPRO	LPSO	LOR
20	Describe how NCS temperature, pressure, flow and Pzr level are measured and indicated.		X	X	X	
21	Describe the operation and indication readout of the following NCS level instrumentation: • Ultrasonic level detection • WR level • NR level • Sightglass		X	X	X	X
22	State the nominal values for NC System pressure, Th, Tc, Tave, Pzr temperature for Hot Zero Power and Hot Full Power.	X	X	X	X	
23	Given a Limit and/or Precaution associated with the NC System, discuss its basis and when it applies.		X	X	X	X
24	Concerning the Technical Specifications related to the NC System: • Given the LCO title, state the LCO (including any COLR values) and applicability. • For any LCO's that have action required within one hour, state the action. • Given a set of parameter values or system conditions, determine if any Tech Spec LCO's is(are) not met and any actions(s) required within one hour. • Given a set of parameter values or system conditions and the appropriate Tech Spec, determine required action(s). • Discuss the bases for a given Tech. Spec. LCO or Safety Limit. * SRO ONLY			X X X X	X X X X X	X X X X *

3.4 REACTOR COOLANT SYSTEM (RCS)

3.4.2 RCS Minimum Temperature for Criticality

LCO 3.4.2 Each RCS loop average temperature (T_{avg}) shall be $\geq$ 551°F.

APPLICABILITY: MODE 1,
MODE 2 with $k_{eff} \geq 1.0$.

ACTIONS

CONDITION	REQUIRED ACTION	COMPLETION TIME
A. T_{avg} in one or more RCS loops not within limit.	A.1 Be in MODE 2 with K_{eff} < 1.0.	30 minutes

SURVEILLANCE REQUIREMENTS

SURVEILLANCE	FREQUENCY
SR 3.4.2.1 Verify RCS T_{avg} in each loop $\geq$ 551°F.	--------NOTE-------- Only required if T_{avg} - T_{ref} deviation alarm not reset and any RCS loop T_{avg} < 561°F ---------- 30 minutes

B 3.4 REACTOR COOLANT SYSTEM (RCS)

B 3.4.2 RCS Minimum Temperature for Criticality

BASES

BACKGROUND

This LCO is based upon meeting several major considerations before the reactor can be made critical and while the reactor is critical.

The first consideration is moderator temperature coefficient (MTC), LCO 3.1.3, "Moderator Temperature Coefficient (MTC)." In the transient and accident analyses, the MTC is assumed to be in a range from slightly positive to negative and the operating temperature is assumed to be within the nominal operating envelope while the reactor is critical. The LCO on minimum temperature for criticality helps ensure the plant is operated consistent with these assumptions.

The second consideration is the protective instrumentation. Because certain protective instrumentation (e.g., excore neutron detectors) can be affected by moderator temperature, a temperature value within the nominal operating envelope is chosen to ensure proper indication and response while the reactor is critical.

The third consideration is the pressurizer operating characteristics. The transient and accident analyses assume that the pressurizer is within its normal startup and operating range (i.e., saturated conditions and steam bubble present). It is also assumed that the RCS temperature is within its normal expected range for startup and power operation. Since the density of the water, and hence the response of the pressurizer to transients, depends upon the initial temperature of the moderator, a minimum value for moderator temperature within the nominal operating envelope is chosen.

The fourth consideration is that the reactor vessel is above its minimum nil ductility reference temperature when the reactor is critical.

APPLICABLE SAFETY ANALYSES

Although the RCS minimum temperature for criticality is not itself an initial condition assumed in Design Basis Accidents (DBAs), the closely aligned temperature for hot zero power (HZP) is a process variable that is an initial condition of DBAs, such as the rod cluster control assembly (RCCA) withdrawal, RCCA ejection, and main steam line break accidents performed at zero power that either assumes the failure of, or presents a challenge to, the integrity of a fission product barrier.

BASES

APPLICABLE SAFETY ANALYSES (continued)

All low power safety analyses assume initial RCS loop temperatures ≥ the HZP temperature of 557°F (Ref. 1). The minimum temperature for criticality limitation provides a small band, 6°F, for critical operation below HZP. This band allows critical operation below HZP during plant startup and does not adversely affect any safety analyses since the MTC is not significantly affected by the small temperature difference between HZP and the minimum temperature for criticality.

The RCS minimum temperature for criticality satisfies Criterion 2 of 10 CFR 50.36 (Ref. 2).

LCO

Compliance with the LCO ensures that the reactor will not be made or maintained critical ($k_{eff} \geq 1.0$) at a temperature less than a small band below the HZP temperature, which is assumed in the safety analysis. Failure to meet the requirements of this LCO may produce initial conditions inconsistent with the initial conditions assumed in the safety analysis.

APPLICABILITY

In MODE 1 and MODE 2 with $k_{eff} \geq 1.0$, LCO 3.4.2 is applicable since the reactor can only be critical ($k_{eff} \geq 1.0$) in these MODES.

The special test exception of LCO 3.1.8, "PHYSICS TESTS Exceptions," permits PHYSICS TESTS to be performed at ≤ 5% RTP with RCS loop average temperatures slightly lower than normally allowed so that fundamental nuclear characteristics of the core can be verified. In order for nuclear characteristics to be accurately measured, it may be necessary to operate outside the normal restrictions of this LCO. For example, to measure the MTC at beginning of cycle, it is necessary to allow RCS loop average temperatures to fall below $T_{no\ load}$, which may cause RCS loop average temperatures to fall below the temperature limit of this LCO.

ACTIONS

A.1

If the parameters that are outside the limit cannot be restored, the plant must be brought to a MODE in which the LCO does not apply. To achieve this status, the plant must be brought to MODE 2 with k_{eff} < 1.0 within 30 minutes. Rapid reactor shutdown can be readily and practically achieved within a 30 minute period. The allowed time is reasonable, based on operating experience, to reach MODE 2 with k_{eff} < 1.0 in an orderly manner and without challenging plant systems.

BASES

SURVEILLANCE REQUIREMENTS

SR 3.4.2.1

RCS loop average temperature is required to be verified at or above 551°F every 30 minutes when T_{avg} - T_{ref} deviation alarm not reset and any RCS loop T_{avg} < 561°F.

The Note modifies the SR. When any RCS loop average temperature is < 561°F and the T_{avg} - T_{ref} deviation alarm is alarming or inoperable, RCS loop average temperatures could fall below the LCO requirement without additional warning. The SR to verify RCS loop average temperatures every 30 minutes is frequent enough to prevent the inadvertent violation of the LCO.

REFERENCES

1. UFSAR, Section 15.

2. 10 CFR 50.36, Technical Specifications, (c)(2)(ii).

Examination Outline Cross-reference:	Level	RO	SRO
	Tier #	1	
	Group #	2	
	K/A #	011 AA2.01	
	Importance Rating	3.4	

Ability to determine and interpret the following as they apply to the Pressurizer Level Control Malfunctions: PZR level indicators and alarms

Proposed Question: Common 58

Given the following plant conditions:

- Unit at 100% RATED THERMAL POWER with all systems normally aligned for this power level.
- Pressurizer Level Control Switch is in the "1&2" position.

The following events occur in the order as listed:

- Charging flow goes down.
- Letdown automatically isolates and PZR heaters (all) de-energize.
- Reactor Trip occurs.

Which ONE (1) of the following describes the PRESSURIZER LEVEL CHANNEL which failed and the associated alarms that will be received?

A. Channel I failed HIGH. PZR HI LEVEL ALERT and PZR HI LEVEL DEVIATION alarms will be received.

B. Channel I failed HIGH. PZR HI LEVEL ALERT alarm will be received ONLY.

C. Channel II failed HIGH. PZR HI LEVEL ALERT and PZR HI LEVEL DEVIATION alarms will be received.

D. Channel II failed HIGH. PZR HI LEVEL ALERT alarm will be received ONLY.

Proposed Answer: A

Explanation (Optional):

A is correct. Control system response would indicate that Channel 1 failed. Both alarms receive in put from the control channel

B is incorrect. Both alarms received

C is incorrect. Wrong level channel, correct alarm response

D is incorrect. Wrong channel, wrong response

Technical Reference(s): PS-ILE, pg 19 - 23 (Attach if not previously provided)

Proposed references to be provided to applicants during examination: None

Learning Objective: PS-ILE, Obj 9, 12 (As available)

Question Source: Bank # X(PSILE029)

Modified Bank # _____ (Note changes or attach parent)

New _____

Question History: Last NRC Exam _____

Question Cognitive Level: Memory or Fundamental Knowledge _____

Comprehension or Analysis X

10 CFR Part 55 Content: 55.41 7

55.43 _____

Comments:

CLASSROOM TIME (Hours)

NLO	NLOR	LPRO	LPSO	LOR
N/A	1.5	1.5	1.5	1.5

OBJECTIVES

	OBJECTIVE	NLO	NLOR	LPRO	LPSO	LOR
1	State the purpose of the Pressurizer Level Control System.			X	X	
2	Draw the Pressurizer Level Control System per training drawing 7.2.			X	X	
3	Describe the Pressurizer Level Control System Program (include values and source signal for program development).			X	X	X
4	Describe how the level in the Pressurizer is raised or lowered to match the Program Level by the Pressurizer Level Control System.			X	X	X
5	Describe the controls and indications associated with the Pressurizer Level Control System.			X	X	X
6	Describe the effect that the integral function has on the output of the Pressurizer Level Master Controller.			X	X	X
7	Describe the effect on the Pressurizer Level Control System when the setting on the potentiometer on the Pressurizer Level Master Controller is changed.			X	X	X
8	Describe the effect on the Pressurizer Level Control system when the Level Master output is increased or decreased while the controller is in manual.			X	X	X
9	Describe all automatic control functions (alarms and protection) that occur when Pressurizer level deviates from programmed level (include setpoint).			X	X	X

OBJECTIVES

	OBJECTIVE	NLO	NLOR	LPRO	LPSO	LOR
10	Describe the protection (signals, setpoints, permissives) associated with Pressurizer level (logic not required).			X	X	X
11	Describe the actions the operator must take to restore Pressurizer heater operation following a low level heater cutoff.			X	X	X
12	For any Pressurizer Level Control System input signal failure, determine the effect and evaluate operator action to be taken.			X	X	X
13	Determine program Pressurizer level for interim power levels between 0% and 100%.			X	X	X
14	Concerning the Technical Specifications related to the Pressurizer Level Control System:					
	• Given the LCO title, state the LCO (including any COLR values) and applicability.			X	X	X
	• For any LCO's that have action required within one hour, state the action.			X	X	X
	• Given a set of parameter values or system conditions, determine if any Tech Spec LCO's is (are) not met and any action(s) required within one hour.			X	X	X
	• Given a set of parameters or system conditions and the appropriate Tech Specs, determine required action(s).			X	X	X
	• Discuss the bases for a given Tech Spec LCO or Safety Limit				X	
	*** SRO ONLY**					

2.5. Control Functions

2.5.1. PZR Low Level

Objective #9

In the event PZR Level decreases to 17%, valves NV1, NV2, NV457, NV458 and NV35 are automatically closed. This isolates letdown to prevent further loss of inventory and minimize the possibility of uncovering the heaters. At the same time all PZR Heater groups are de-energized to protect them from overheating should they become uncovered. An Annunciator Alarm, PZR LO LEVEL HTRS OFF & LETDN SECURED, alerts the operator of the low level condition.

Objective #11

Once level has increased to greater than 17%, all heater groups must be manually re-energized and letdown can be re-established. This is accomplished by selecting "MAN" on "A", "B", and "D" Heater MAN/AUTO Selector Switch. This allows closing the 600V supply breaker from their control switches on 1MC-5. "C" Heater supply breaker is closed via the switch on 1MC-10. There is no "MAN/AUTO" switch for "C" Heater.

NOTE: If a Safety Injection has occurred, the Safety Injection signal and the sequencers must be reset in order to close the A & B heater breakers.

2.5.2. High Level Deviation

Objective #9

If level should increase to greater than 5% above program level an Annunciator alarm, PZR HI LEVEL DEV CONTROL, is generated and the back-up heaters come on. This is done so that the subcooled water which has just surged into the PZR can be heated to saturation temperature. This will allow the water to flash to steam and avoid a pressure decrease as the level decreases to normal.

2.5.3. Low Level Deviation

If level should decrease to less than 5% below program level an Annunciator alarm, PZR LO LEVEL DEVIATION, alerts the operator of the low level condition.

2.5.4. Hi Level Alarm

If level should increase to 70% an annunciator alarm, PZR HI LEVEL, alerts the operator of the high level condition

2.5.5. Hi Level Alert

If level should increase to 92% on one out of three channels, an annunciator alarm is generated to alert the operator of a failed level channel or possible Reactor Trip.

2.6. Protection

Objective #10

If level should increase to 92% on two out of three channels, a Reactor Trip (P4) occurs, IF above 10% power (P7) as indicated by reactor power (P10) or turbine power (P13) being greater than 10%.

3.0 SYSTEM OPERATION

3.1. Normal Operation

3.1.1. Limits and Precautions

When any Pressurizer level channel is removed from service, the PRESSURIZER LEVEL CONTROL SELECT switch should be set such that an alternate channel is used for control actions. (This will avoid any inadvertent level transients that could happen when a channel is being tested.)

OP/1/A/6200/01, Chemical And Volume Control System

NOTE: IAE does not maintain the AUTO portion of the PD Pump controller. Never place the PD Pump controller in AUTO (AUTO is not used).

3.1.2. Unit Startup

Before startup, the Reactor Coolant Loops and Pressurizer are filled completely with water.

After venting is complete, the Reactor Coolant System is pressurized.

When Pressurizer temperature exceeds saturation temperature for existing pressure, a steam bubble is formed while pressure is maintained at the desired value (approximately 50 psig).

Pressurizer level is reduced manually until the no-load PZR level is reached.

Level control may be switched to manual to maintain water level during heatup.

NOTE: Charging and letdown are controlled using additional controls associated with the Chemical and Volume Control System.

3.1.3. Unit Operation

During normal operation, Pressurizer level is maintained automatically if the NV pumps are in service.

If the PD Pump is being used for Pressurizer level control, it is controlled manually.

3.1.4. Unit Shutdown

Pressurizer heaters are de-energized and spray flow is manually controlled to cool the Pressurizer.

Charging flow will be controlled to raise PZR level to approximately 90% level.

Cooldown of PZR is accomplished with ND spray.

3.2. Abnormal and Emergency Operation

Transmitter Electrical Failures

Objective #12

NOTE: The level control selector switch is initially in the 1&2 position.

Channel	Failure	Effect	Operator Action
Level I	High	Charging flow reduced to minimum. Back-up heaters come on. Level drops until low level is reached and letdown isolates. Level rises until High Level Reactor Trip if > P7.	Switch to Level Control Select position 3&2.
	Low	Letdown isolates and heaters off. Full charging flow. Level rises until High Level Reactor Trip if > P7.	Switch to Level Control Select position 3&2.

Given the following conditions:

- Unit 1 is in Mode 5.
- Source Range Channel 1N-31 failed 2 hours ago and was removed from service.
- Repairs have been made and the channel has been returned to service.

Which ONE (1) of the following describes the indication available for N-31 when it has been returned to service?

A. HIGH FLUX AT SHUTDOWN switch – NORMAL
S/R HI FLUX ALM BLOCKED (1AD2, D-2) – LIT
S/R OR I/R TRIP BYPASS (1AD2, E-2) – LIT
1/N-31B S/R CHANNEL 1 TRIP BYPASS status light – LIT

B. HIGH FLUX AT SHUTDOWN switch – NORMAL
S/R HI FLUX ALM BLOCKED (1AD2, D-2) – DARK
S/R OR I/R TRIP BYPASS (1AD2, E-2) – LIT
1/N-31B S/R CHANNEL 1 TRIP BYPASS status light – LIT

C. HIGH FLUX AT SHUTDOWN switch – NORMAL
S/R HI FLUX ALM BLOCKED (1AD2, D-2) – DARK
S/R OR I/R TRIP BYPASS (1AD2, E-2) – DARK
1/N-31B S/R CHANNEL 1 TRIP BYPASS status light – DARK

D. HIGH FLUX AT SHUTDOWN switch – BYPASS
S/R HI FLUX ALM BLOCKED (1AD2, D-2) – DARK
S/R OR I/R TRIP BYPASS (1AD2, E-2) – LIT
1/N-31B S/R CHANNEL 1 TRIP BYPASS status light – DARK

Proposed Answer: C

Explanation (Optional):

C is correct. Item requires applicant to know status of each of the lights for expected plant condition after restoring the channel to service

A is incorrect. Channel Bypass and Trip Bypass lights would be dark at this condition. HI flux block would be dark

B is incorrect. Channel Bypass and Trip Bypass lights would be dark at this condition.

D is incorrect. With channel in service, hi flux at shutdown would be in normal position. Also, trip bypass would be dark on the drawer

Technical Reference(s): AP/1/A/5500/16, pg 8 (Attach if not previously provided)
IC-ENB, pg 19, 21, 81

Proposed references to be provided to applicants during examination: None

Learning Objective: IC-ENB Obj 4 (As available)

Question Source: Bank # _____
Modified Bank # _____ (Note changes or attach parent)
New X

Question History: Last NRC Exam _____

Question Cognitive Level: Memory or Fundamental Knowledge _____
Comprehension or Analysis X

10 CFR Part 55 Content: 55.41 7
55.43 _____

Comments:

Examination Outline Cross-reference:	Level	RO	SRO
	Tier #	1	
	Group #	2	
	K/A #	032 AA1.01	
	Importance Rating	3.1	

Ability to operate and / or monitor the following as they apply to the Loss of Source Range Nuclear Instrumentation: Manual restoration of power

Proposed Question: Common 59

CLASSROOM TIME (Hours)

NLO	NLOR	LPRO	LPSO	LOR
	2.0	3.0	3.0	2.0

OBJECTIVES

	OBJECTIVE	NLO	NLOR	LPRO	LPSO	LOR
1	State the purpose of the Nuclear Instrumentation System.		X	X	X	
2	Explain why it is necessary to use three ranges of Excore Nuclear Instrumentation.		X	X	X	
3	Explain the operation of the detector used in each range of instrumentation.		X	X	X	
4	Sketch the outputs of each range of Nuclear Instrumentation, to include all indication, control and protective circuits.		X	X	X	
5	Explain why gamma compensation is necessary in the Source Range and Intermediate Range but not in the Power Range.		X	X	X	
6	Describe the methods of gamma compensation used by the Source and Intermediate Ranges.		X	X	X	
7	Describe the effects of 'over' and 'under' compensation on the Intermediate Range.		X	X	X	
8	Explain the functions of the control switches for each range of Nuclear Instrumentation.		X	X	X	X
9	Concerning the channel current comparator and detector current comparator:					
	• Explain the function of each.		X	X	X	
	• List the alarm setpoints for each.		X	X	X	X
10	Explain the functions of all related bypass and block switches on the Nuclear Instrumentation miscellaneous panels.		X	X	X	X
11	List the Reactor Trips associated with the Nuclear Instrumentation System. (Include setpoints, logic and interlocks)		X	X	X	X

The Pulse Shaper shapes pulses into uniform square waves.

The Pulse Driver matches impedance between the Pulse Shaper and the Log Pulse Integrator.

The Log Pulse Integrator changes the pulse signal to a voltage output proportional to logarithm of pulse rate.

The Level Amplifier amplifies the signal from the Log Pulse Integrator to drive bistables, indicators and other circuits.

A Bistable Relay Driver provides the "**High Flux at Shutdown**" Alarm and the "**Containment Evacuation**" Alarm whenever the source range counts exceed the setpoint. Another Bistable Relay Driver provides the "**High Level Trip**" signal (10^5 cps).

An isolation amplifier feeds the OAC, SUR Circuitry, Control Board Meter, and the NR-45 Chart Recorder.

2.1.3 Source Range Outputs

Both Source Range channels read out on the Control Board with a range of 10^0 to 10^6 counts per second (cps). The Source Range level can be monitored on the NR-45 Control Room Chart Recorder. In addition to counts per second, Source Range Start-up Rate (SUR) is indicated for each channel in decades per minute (-0.5 to 5.0 DPM).

The High Flux at Shutdown alarm actuates when source range level reaches the setpoint of one half decade above normal shutdown counts. High Flux at Shutdown also actuates the Containment evacuation alarm inside the containment. A 5 second time delay precludes short duration spikes from actuating the Hi Flux at Shutdown and Containment Evacuation alarms.

2.1.4 Source Range Drawer Panel (Reference **Figure 7.5**).

Objective # 8

Detector Volts Meter - Indicates high voltage supplied to proportional counter detector.

Neutron Level Meter - Scale 10^0 to 10^6 cps.

Instrument Power "ON" Lamp - 118 volts AC Instrument power applied to drawer.

Control Power "ON" Lamp - 118 volts AC Control Power applied to drawer.

Channel "On Test" Lamp - Indicates the operation selector switch is in a position other than "NORMAL".

Loss of Detector Volt Lamp - Indicates high voltage to detector off or low.

Level Trip Lamp - indicates neutron level greater than trip setpoint in Source Range.(10^5 cps)

Level Trip Bypass Lamp - On when Level Trip switch in "Bypass" for test or calibration.

High Flux at Shutdown Lamp - Neutron level greater than 1/2 decade above normal shutdown level in Mode 6 and $\leq$ 5 times shutdown level in Modes 3,4&5.

Bistable Trip Spare Lamp - No function.

Instrument Power Fuses - Overcurrent protection for power supply circuits. Instrument power supplies the meters, circuit processing components, high voltage supply and detector power. This is true for the IR and PR drawers/circuits also.

Control Power Fuses - Overcurrent protection for control signal circuit transformers. Control power supplies the lights on the drawer and 118 VAC to the bistable relay drivers to the plant relays. (High flux at shutdown alarm and SR high level trip). This is true for the IR and PR drawers/circuits also.

NOTE (Reference **Figure 7.21**): If either instrument or control power fuses are removed, the bistables will trip. Level Trip Bypass will prevent bistable trip for Instrument Power fuses only.

Objective # 10

Level Trip Switch - Two position switch: Normal - Switch Inactive; Bypass - Enables Operation Selector Switch for test and calibration; Provides AC signal to prevent Rx trip signal during testing.

Operation Selector Switch - Eight position switch enabled by Level Trip Switch to 'Bypass' position. Channel On Test lamp lights when not in Normal. Normal - Switch Inactive; Six Test Positions with Preset cps test values; Level Adjust - Level Adjust Potentiometer in circuit.

Level Adjust Potentiometer - Adjustable test signal into level amp. - Enables adjustment of the trip level of various bistables.

Objective # 10

High Flux at Shutdown Switch - Two position switch. Normal -allows circuit to provide "High Flux at Shutdown" and "Containment Evacuation" alarm when setpoint is exceeded; Block-used during startup - Blocks High Flux at Shutdown Alarm and Containment Evacuation Alarm.

2.2 Intermediate Range

2.2.1 Intermediate Range Detectors

Objective # 6

Reference **Figure 7.6**. Both intermediate range channels use compensated ion chambers to determine reactor power. These detectors are located just above the source range detectors in the same housing. The compensated ion chamber (CIC) uses two concentric Nitrogen gas filled, volumes: the "outer" is sensitive to both neutrons and gamma (boron lined); the "inner" sensitive only to gamma. As the two volumes are mounted concentrically in one unit, both are in essentially the same radiation field. By placing a negative potential on the inner lead, the gamma signal generated in the inner volume is made to compensate or cancel out the gamma signal generated in the outer volume. Since the two volumes can not be manufactured exactly the same size, the high voltage to the center electrode is variable to adjust the sensitivity of the inner volume. Operating in the recombination region, a change in inner volume detector voltage will vary the gamma current for a given flux level. The outer volume operates in the ion chamber region where all the ion pairs are collected.

Objective # 5

Gamma radiation becomes a smaller percentage of the detector interactions as power increases and becomes insignificant after 10^{-9} amps (first two decades). Above this power level gamma compensation is no longer required for accurate indication.

7.4 Source Range Circuit (03/20/97)

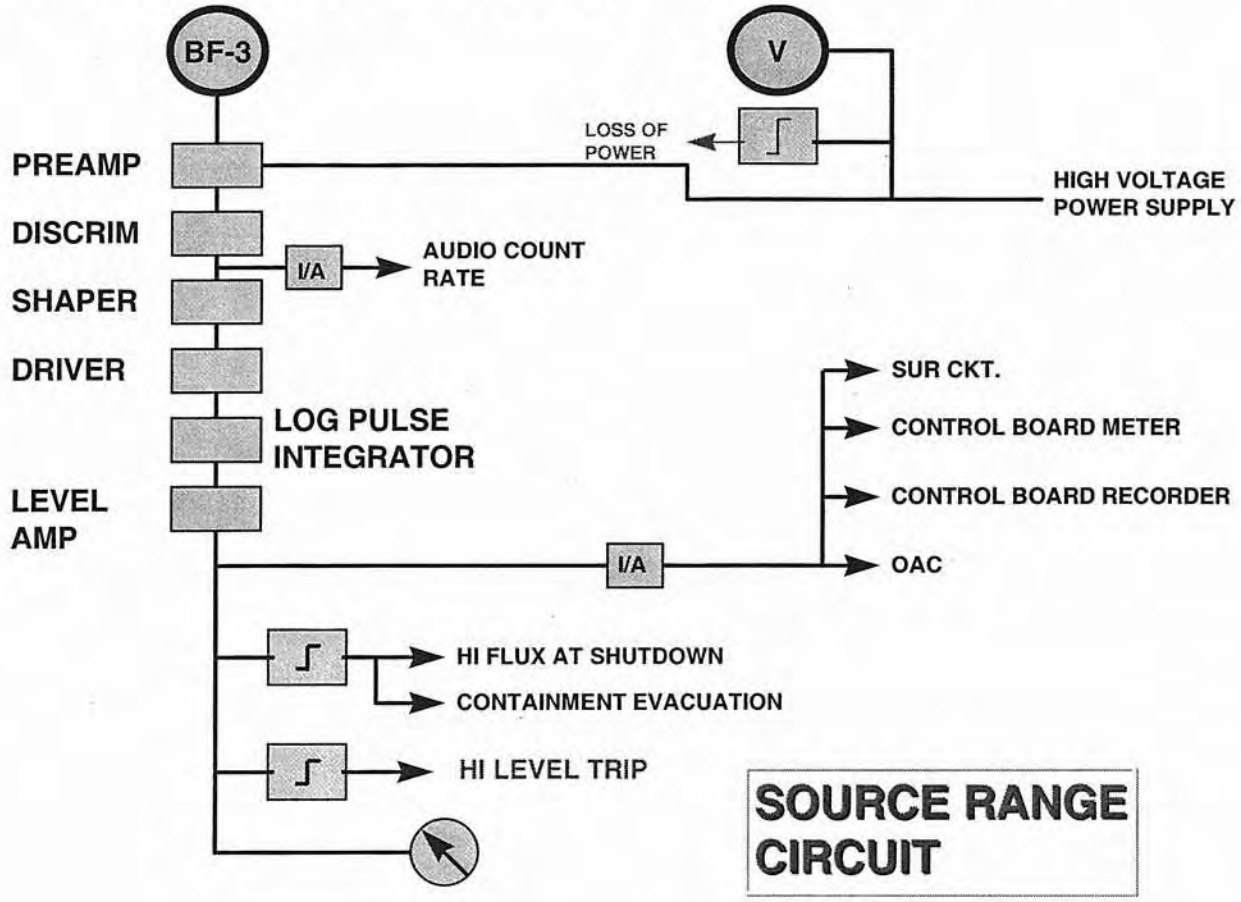

ACTION/EXPECTED RESPONSE	RESPONSE NOT OBTAINED
16. **<u>WHEN</u> malfunctioning S/R channel repaired, <u>THEN</u> perform the following:**	__ **Notify IAE.**
__ a. Place "HIGH FLUX AT SHUTDOWN" switch to "NORMAL".	
__ b. Ensure "S/R HI FLUX ALM BLOCKED" alarm (1AD-2, D-2) - DARK.	
__ c. Place "LEVEL TRIP" switch on S/R Drawer to "NORMAL".	
d. Ensure the following - DARK:	
__ 1) "LEVEL TRIP BYPASS" indicating light on S/R Drawer.	
__ 2) "S/R OR I/R TRIP BYPASS" alarm (1AD-2, E-2).	
3) The failed channel's status light on 1SI-19:	
__ • "1/N-31B S/R CHANNEL I TRIP BYPASS"	
OR	
__ • "1/N-32B S/R CHANNEL II TRIP BYPASS".	
__ e. **<u>IF</u>** 1NV-250 (Reactor M/U Water to NV System) (aux bldg, 733, JJ-54, 25 ft north of KC pumps) was closed per Step 10, **<u>AND</u>** allowed open per Tech Specs, **<u>THEN</u>** evaluate dispatching operator to open 1NV-250.	

<u>END</u>

Examination Outline Cross-reference:	Level	RO	SRO
	Tier #	1	
	Group #	2	
	K/A #	036 AK1.03	
	Importance Rating	4.0	

Knowledge of the operational implications of the following concepts as they apply to Fuel Handling Incidents: Indications of approaching criticality

Proposed Question: Common 60

The unit is in Mode 6.

Refueling activities are in progress. An error was made and several fuel assemblies were mispositioned in the core.

Which ONE (1) of the following indications is used to determine whether an inadvertent criticality is occurring?

A. Source Range indication and Intermediate Range Startup Rate

B. Containment Evacuation alarm and Source Range Startup Rate

C. Wide Range Neutron Detectors and Containment Radiation levels

D. Intermediate Range Startup Rate and Containment Evacuation alarm

Proposed Answer: B

Explanation (Optional):

B is correct. SR SUR would be positive with no fuel movements taking place. Evacuation alarm would sound if SR counts reached 3 times the base counts.

A is incorrect. IR SUR would not be monitored because power not in IR. Credible because SR counts would be monitored

C is incorrect. WR may be used as backup to SR. Containment Rad levels would not be an indicator, as many things could cause them to rise. With >23 feet of water over the fuel, rad levels would remain constant in the source range

D is incorrect. Evacuation alarm would sound; IR SUR would not be monitored because power is not high enough in Mode 6

Technical Reference(s): IC-ENB, pg 20 (Attach if not previously provided)

Proposed references to be provided to applicants during examination: None

Learning Objective: IC-ENB-Obj 4 (As available)

Question Source:
Bank # _____
Modified Bank # _____ (Note changes or attach parent)
New X

Question History: Last NRC Exam _____

Question Cognitive Level:
Memory or Fundamental Knowledge X
Comprehension or Analysis _____

10 CFR Part 55 Content:
55.41 6
55.43 _____

Comments:

CLASSROOM TIME (Hours)

NLO	NLOR	LPRO	LPSO	LOR
	2.0	3.0	3.0	2.0

OBJECTIVES

	OBJECTIVE	NLO	NLOR	LPRO	LPSO	LOR
1	State the purpose of the Nuclear Instrumentation System.		X	X	X	
2	Explain why it is necessary to use three ranges of Excore Nuclear Instrumentation.		X	X	X	
3	Explain the operation of the detector used in each range of instrumentation.		X	X	X	
4	Sketch the outputs of each range of Nuclear Instrumentation, to include all indication, control and protective circuits.		X	X	X	
5	Explain why gamma compensation is necessary in the Source Range and Intermediate Range but not in the Power Range.		X	X	X	
6	Describe the methods of gamma compensation used by the Source and Intermediate Ranges.		X	X	X	
7	Describe the effects of 'over' and 'under' compensation on the Intermediate Range.		X	X	X	
8	Explain the functions of the control switches for each range of Nuclear Instrumentation.		X	X	X	X
9	Concerning the channel current comparator and detector current comparator:					
	• Explain the function of each.		X	X	X	
	• List the alarm setpoints for each.		X	X	X	X
10	Explain the functions of all related bypass and block switches on the Nuclear Instrumentation miscellaneous panels.		X	X	X	X
11	List the Reactor Trips associated with the Nuclear Instrumentation System. (Include setpoints, logic and interlocks)		X	X	X	X

The Pulse Shaper shapes pulses into uniform square waves.

The Pulse Driver matches impedance between the Pulse Shaper and the Log Pulse Integrator.

The Log Pulse Integrator changes the pulse signal to a voltage output proportional to logarithm of pulse rate.

The Level Amplifier amplifies the signal from the Log Pulse Integrator to drive bistables, indicators and other circuits.

A Bistable Relay Driver provides the "**High Flux at Shutdown**" Alarm and the "**Containment Evacuation**" Alarm whenever the source range counts exceed the setpoint. Another Bistable Relay Driver provides the "**High Level Trip**" signal (10^5 cps).

An isolation amplifier feeds the OAC, SUR Circuitry, Control Board Meter, and the NR-45 Chart Recorder.

2.1.3 Source Range Outputs

Both Source Range channels read out on the Control Board with a range of 10^0 to 10^6 counts per second (cps). The Source Range level can be monitored on the NR-45 Control Room Chart Recorder. In addition to counts per second, Source Range Start-up Rate (SUR) is indicated for each channel in decades per minute (-0.5 to 5.0 DPM).

The High Flux at Shutdown alarm actuates when source range level reaches the setpoint of one half decade above normal shutdown counts. High Flux at Shutdown also actuates the Containment evacuation alarm inside the containment. A 5 second time delay precludes short duration spikes from actuating the Hi Flux at Shutdown and Containment Evacuation alarms.

2.1.4 Source Range Drawer Panel (Reference **Figure 7.5**).

Objective # 8

Detector Volts Meter - Indicates high voltage supplied to proportional counter detector.

Neutron Level Meter - Scale 10^0 to 10^6 cps.

Instrument Power "ON" Lamp - 118 volts AC Instrument power applied to drawer.

Control Power "ON" Lamp - 118 volts AC Control Power applied to drawer.

Channel "On Test" Lamp - Indicates the operation selector switch is in a position other than "NORMAL".

Loss of Detector Volt Lamp - Indicates high voltage to detector off or low.

Level Trip Lamp - indicates neutron level greater than trip setpoint in Source Range.(10^5 cps)

Level Trip Bypass Lamp - On when Level Trip switch in "Bypass" for test or calibration.

High Flux at Shutdown Lamp - Neutron level greater than 1/2 decade above normal shutdown level in Mode 6 and $\leq$ 5 times shutdown level in Modes 3,4&5.

Bistable Trip Spare Lamp - No function.

Instrument Power Fuses - Overcurrent protection for power supply circuits. Instrument power supplies the meters, circuit processing components, high voltage supply and detector power. This is true for the IR and PR drawers/circuits also.

Examination Outline Cross-reference:	Level	RO	SRO
	Tier #	1	
	Group #	2	
	K/A #	059 AK2.01	
	Importance Rating	2.7	

Knowledge of the interrelations between the Accidental Liquid Radwaste Release and the following: Radioactive-liquid monitors

Proposed Question: Common 61

Given the following:

- Unit 1 has initiated a liquid radioactive waste release from the Ventilation Unit Condensate Drain Tank (VUCDT) through the RC system.
- All lineups and authorizations have been properly made in accordance with OP/0/B/6200/35 using the normal path.
- Two RC pumps are the minimum required under the LWR document.

Given the following initial conditions:

- 3 RC pumps are running
- 1EMF-44 *(CONT VENT DRN TANK OUT)* correctly set for trip 1 and trip 2 activity limits
- Allowable Release Rate = 50 GPM (based on high activity)
- No other releases are in progress

If the release automatically terminates 40 seconds after initiation, which one of the following conditions could have terminated the release?

A. 1WM-46 *(LIQUID WASTE DISCH VALVE)* closing automatically if 1 RC pump tripped

B. 1WM-46 closing automatically if 1EMF-44 reached the trip 2 setpoint

C. 1WP-35 *(WMT & VUCDT TO RC CNTRL)* closing automatically if 1 RC pump tripped

D. 1WP-35 closing automatically if 1EMF-44 reached the trip 2 setpoint

Proposed Answer: D

Explanation (Optional):

A.Incorrect: - RC pump interlock will not actuate - set at 2 pumps (minimum required on LWR document). WM-46 is isolated and not used anymore as a release path. Plausible: - this was formerly the normal release path

B.Incorrect: - WM-46 receives a closing signal from EMF-44 but this is not the normal path for a release. WM-46 is isolated and not used anymore. Plausible: - this was formerly the normal release path

C.Incorrect: - RC pump interlock will not actuate - set at 2 pumps (minimum required on LWR document). Plausible: - if the candidate misunderstands the RC pump interlock--this was the correct answer on a prior NRC exam

D.Correct answer

Technical Reference(s): WE-RLR Pg 11 (Attach if not previously provided)

Proposed references to be provided to applicants during examination: None

Learning Objective: WE-RLR Obj 5 (As available)

Question Source: Bank # X

Modified Bank # _____ (Note changes or attach parent)

New _____

Question History: Last NRC Exam _____

Question Cognitive Level: Memory or Fundamental Knowledge X

Comprehension or Analysis _____

10 CFR Part 55 Content: 55.41 4

55.43 _____

Comments:

CLASSROOM TIME (Hours)

NLO	NLOR	LPRO	LPSO	LOR
		2	2	2

OBJECTIVES

	OBJECTIVE	NLO	NLOR	LPRO	LPSO	LOR
1	State the systems that are used to release radioactive liquids to the environment. WERLR001			X	X	X
2	Given a completed LWR, state the recommended release rate. WERLR002			X	X	X
3	Given the applicable procedure and LWR paperwork, review the LWR and determine if a release can be initiated. WERLR003			X	X	X
4	Given a completed LWR, state the proper EMF to be used for the release. WERLR004			X	X	X
5	Evaluate plant parameters to determine any abnormal system conditions that may exist. WERLR005			X	X	X

PRESENTATION

2.1 INTRODUCTION

Objective # 1

Releases of radioactive liquids to the environment are necessary and occur routinely at nuclear power facilities. These releases need to be conducted within regulatory requirements and activity levels released should be "as low as reasonably achievable". **The Liquid Waste System (WL) is used to release these liquids to the environment. On occasion, radioactive releases may also be released from the Turbine Building Sump (WP System).** This lesson deals with the Selected Licensee Commitments (SLC) and LWRs associated with these releases.

2.0 PROCESSING AN LWR

2.1 General Description

Liquid waste releases (LWRs) are accomplished through the combined efforts of Operations, Radiation Protection, and Chemistry. The process for releasing liquid waste from various sources in the plant will be described in the next few sections. The following generic comments apply to most of the liquid radiological waste releases.

- 1WP-35 (Turbine Building Sump Pumps to RC Isol) and 1WM-46 (Liquid Waste Discharge) will trip closed if the preset radiation levels are exceeded on 1EMF49, 1EMF44, or 2EMF44 <u>or</u> if there is less than the number of RC pumps running that are required for dilution. 1WP-37 (Turbine Building Sump Pumps to RC Isol) will trip closed if there is less than the number of RC pumps running that are required for dilution.

- If a site assembly occurs during a release, Chemistry will secure the release.

- In the event of any problem with an EMF that would require a work request, contact RP for initiation of the work request.

Examination Outline Cross-reference:	Level	RO	SRO
	Tier #	1	
	Group #	2	
	K/A #	060 AK3.03	
	Importance Rating	3.8	

Knowledge of the reasons for the following responses as they apply to the Accidental Gaseous Radwaste: Actions contained in EOP for Gaseous Waste Release

Proposed Question: Common 62

Given the following conditions on Unit 1:

- A Steam Generator Tube Rupture has occurred.
- The crew is preparing to cooldown the ruptured SG.

Which ONE (1) of the following describes the preferred method of cooldown for minimizing spread of radioactive contamination?

A. Process through SG blowdown.

B. Backfill the ruptured SG to the NC system.

C. Steam Dump to condenser.

D. Steam Dump through SG SM PORVs.

Proposed Answer: B

Explanation (Optional):
B is correct.
A is incorrect. Would minimize contamination but would take a significant period of time, so would not be preferred
C is incorrect. Secondary contamination would result, but would result in faster cooldown
D is incorrect. Secondary and atmosphere contamination would result but would be faster cooldown. Distractors are reasonable, because applicant may assume that a faster cooldown will ultimately minimize contamination

Technical Reference(s): E-3 Basis Document, pg 111 (Attach if not previously provided)

Proposed references to be provided to applicants during examination: None

Learning Objective: E-3 Obj 3 (As available)

Question Source: Bank # X (WTSI)
Modified Bank # _____ (Note changes or attach parent)
New _____

Question History: Last NRC Exam _____

Question Cognitive Level: Memory or Fundamental Knowledge X
Comprehension or Analysis _____

10 CFR Part 55 Content: 55.41 10
55.43 _____

Comments:

CLASSROOM TIME (Hours)

NLO	NLOR	LPRO	LPSO	LOR
		4.0	4.0	3.0

OBJECTIVES

SEQ	OBJECTIVE	NLO	NLOR	LPRO	LPSO	LOR
1	Explain the purpose for each procedure in the E-3 series. EPE3001			X	X	
2	Discuss the entry and exit guidance for each procedure in the E-3 series. EPE3002			X	X	
3	Discuss the mitigating strategy (major actions) of each procedure in the E-3 series. EPE3003			X	X	X
4	Discuss the basis for any note, caution or step for each procedure in the E-3 series. EPE3004			X	X	X
5	Given the Foldout page, discuss the actions included and the basis for these actions. EPE3005			X	X	X
6	Given the appropriate procedure, evaluate a given scenario describing accident events and plant conditions to determine any required action and its basis. EPE3006			X	X	X
7	Discuss the time critical task(s) associated with the E-3 series procedures including the time requirements and the basis for these requirements. EPE3007			X	X	X

CAUTION If no NC pumps can be run, then using ES-3.1 (Post SGTR Cooldown Using Backfill) may result in void formation in ruptured loop and in inadequate shutdown margin due to poor mixing of unborated S/G water.

CAUTION If S/G NR level has exceeded 92% (82%ACC), then using ES-3.3 (Post SGTR Cooldown using steam dump) may result in damage to piping and equipment.

CAUTION If the condenser is unavailable, then using ES-3.3 (Post SGTR Cooldown using steam dump) may result in higher offsite radiological releases.

PURPOSE: To aid station management in deciding the appropriate recovery procedure.

BASIS: The appropriate recovery procedure depends upon the particular plant conditions at this stage of the SGTR event.

STEP 48 Consult with station management to determine appropriate Post-SGTR cooldown method.

PURPOSE: To select the optimum post-SGTR recovery procedure.

BASIS: Previous recovery actions were designed to terminate release from the ruptured S/G, stop primary-to-secondary leakage, and restore NC pressure, temperature, and inventory control. Consequently, all safety concerns should have been resolved. However, the plant must be cooled and depressurized to cold shutdown conditions without jeopardizing safety in order to effect repairs. This step instructs the operator to select the optimum recovery method for the particular plant and event.

1. ES-3.1, Post-SGTR Cooldown Using Backfill, is the preferred recovery method. It minimizes radiological releases and facilitates processing of contaminated primary coolant. Its main disadvantage is the process is slow, particularly if no NC pump is running. Of concern: the chemistry of the secondary side water should be considered with respect to potential boron dilution and adverse effects on primary system components.

2. ES-3.2, Post-SGTR Cooldown Using Blowdown, also minimizes radiological releases. In addition, boron dilution and adverse secondary side water chemistry effects are eliminated. Its main disadvantages are the storage and processing capabilities of the blowdown system are limited and NC depressurization is likely to proceed slowly.

3. ES-3.3, Post-SGTR Cooldown Using Steam Dump, provides the fastest means of depressurizing the NC system, which may be important particularly if feedwater supply is limited. Its main disadvantage is the radiological consequences, particularly if steam dump to condenser is not available. Of concern: if water exists in the steamline, steam release may cause water hammer effects resulting in damage to secondary side equipment. This method should not be used if water may exist in the main steamlines.

Examination Outline Cross-reference:	Level	RO	SRO
	Tier #	1	
	Group #	2	
	K/A #	067 G2.1.23	
	Importance Rating	3.9	

Conduct of Operations: Ability to perform specific system and integrated plant procedures during all modes of plant operation.

Proposed Question: Common 63

Given the following conditions:

- Three days after a LOCA, the VE system is in operation.
- The following alarm is received:
  - AD12-F3, 1A VE Filter Fire
- Filter temperature is 380°F and going up.
- System response is as designed.

Which ONE (1) of the following actions are required?

A. Verify 1A VE Fan has automatically tripped. Dispatch an operator to open the RF Valves to spray down the Charcoal Filters.

B. Verify 1A VE Fan has automatically tripped. Dispatch an operator to place VE Filter 1A in Bypass, open the RF Valves to spray down the Charcoal Filters, and align VE Fan 1A to exhaust through Filter 1B.

C. Manually trip 1A VE Fan. Dispatch an operator to open the RF Valves to spray down the RF Charcoal Filters.

D. Manually trip 1A VE Fan. Dispatch an operator to place VE Filter 1A in Bypass, open the RF Valves to spray down the RF Charcoal Filters, and align VE Fan 1A to exhaust through Filter 1B.

Proposed Answer: A

Explanation (Optional):

A is correct. Fan auto trips at 325 Deg F

B is incorrect. Credible because fan auto trips, but incorrect because the fan would not be realigned on discharge side. Suction side may be from same source

C is incorrect. Credible because action is correct, and manual trip would be correct if fan had not already auto tripped

D is incorrect. Credible because action manual trip would be correct if auto trip had not occurred

Technical Reference(s): OAD12-F3 (Attach if not previously provided)
CNT VE Pg 13

Proposed references to be provided to applicants during examination: None

Learning Objective: CNT – VE Obj 8 (As available)

Question Source: Bank # _____
Modified Bank # _____ (Note changes or attach parent)
New X

Question History: Last NRC Exam _____

Question Cognitive Level: Memory or Fundamental Knowledge _____
Comprehension or Analysis X

10 CFR Part 55 Content: 55.41 7
55.43 _____

Comments:

CLASSROOM TIME (Hours)

NLO	NLOR	LPRO	LPSO	LOR
1.0	1.0	2.0	2.0	1.0

OBJECTIVES

	OBJECTIVE	NLO	NLOR	LPRO	LPSO	LOR
1	State the purpose of the Annulus Ventilation System.	X	X	X	X	
2	State the purpose of the Hydrogen Purge System.	X	X	X	X	
3	Describe the basic flow path of the Annulus Ventilation System.	X	X	X	X	
4	Describe the basic flow path of the Hydrogen Purge System.	X	X	X	X	
5	Describe the Control Room controls and indications associated with the VE System.			X	X	X
6	State the signals necessary to automatically start the Annulus Ventilation Fans.	X	X	X	X	X
7	Explain the protection provided against excessive negative pressure in the annulus.	X	X	X	X	X
8	Evaluate plant parameters to determine any abnormal system conditions that may exist.			X	X	X
9	State the purpose of the following VE filter train components: • Moisture eliminator • Pre-filter • HEPA filter • Charcoal filter	X	X	X	X	

2.0 COMPONENT DESCRIPTION (refer to Drawing 7.1)

Objective #5

Refer to Drawing 7.2 and 7.3 for Control Room HVAC control and indications

2.1. Annulus Ventilation Fans

Each train has its own 100% capacity fan. Each fan is driven by a 30 hp, 575 VAC, 3 phase, 60 Hz motor, powered from EMXC or EMXD. Design flowrate is 8000 cfm ±10% at 190°F. **A Status Light on the HVAC Board will light, if flowrate decreases to less than 80% flow. Selector switches are provided for each fan in the Control Room with each switch having an auto, manual and a reset position. Each train has 2 flow indications on the HVAC board. One is "Inlet and Recirc Flow" that reads in CFM. The other flow indicator is "Flow to Unit Vent" and reads in inches of water.**

Objective #6

Both fans automatically start upon receipt of a Containment Isolation Phase B Signal (High-High Pressure, 3.0 psig). Once a train has automatically started, it must be manually reset. The fans may also be started manually from the HVAC Control Board. Manual start and seal in capabilities are not allowed during a Blackout event.

Objective #7

The annulus is protected against excessive negative pressure buildup by means of a Low-Low pressure trip. The fan will trip if a Low-Low Pressure (- 7 inches WG) is sensed and that train is running in the exhaust mode in AUTO. VEPT 5440 is the "A" train wide range pressure transmitter which will trip the "A" fan and VEPT 5450 is the "B" train wide range pressure transmitter which will trip the "B" fan. **The fan will restart automatically when the Low-Low Pressure clears and its reset setpoint is reached. The Low-Low Pressure controls are bypassed when the fan switch is placed in the "ON" position.**

Objective #8

The fans will trip, if any of eight Carbon Bed (charcoal filter) fire detection temperatures switches indicate temperatures above 325°F. This also generates a HVAC Panel alarm (VE FILTER FIRE - > 325°F). If the fans are not running they will not start until the fire detection signal clears.

HVAC Control Panel annunciators indicate VE system trouble. Low airflow alarm circuits will activate these annunciators (A(B) VE Fan Low Flow). Main Control Board HVAC system trouble annunciator alarms will be received any time a HVAC Control Panel annunciator is in alarm.

Nomenclature: **1A VE FILTER FIRE** Window: **F3**

Setpoint: 325°F

Origin: 1A VE Fire Detection System

Probable Cause: Fire in VE Filter 1AVSFU-1A charcoal adsorber

Automatic Action: Secures VE Fan 1A.

Immediate Action:

1. Ensure open:
   - 1EMXC-5A (1A Annulus Ventilation Filter Heater)
   - 1EMXC-5D (1A Annulus Ventilation Fan Motor)
2. Open:
   - 1RY-113 (West Aux Bldg Fire Protection Deluge)
   - 1RY-114 (East Aux Bldg Fire Protection Deluge)
3. Close 1RF-1058 (1A Annulus Ventilation Filter Mulsifyre RF Hdr Lo Pt Drn). (767' JJ54)
4. Unlock and open:
   - 1RF-800 (1A Annulus Ventilation Filter Mulsifyre RF Isol) (767' JJ54)
   - 1RF-1111 (1A Annulus Ventilation Filter Mulsifyre RF Isol) (767' JJ54)
5. Secure 1A VE and place 1B VE in operation, as necessary.

Supplementary Action:

1. Refer to Tech Specs.
2. Take appropriate action to return Annulus Filter 1AVSFU-1A to operational status.

References:

- Tech Specs
- MC-1564-1
- MCM-1211.00-817 & 352
- MCEE-156-00.04

End Of Response

Examination Outline Cross-reference:	Level	RO	SRO
	Tier #	1	
	Group #	2	
	K/A #	E08 G2.1.27	
	Importance Rating	2.8	

Conduct of Operations: Knowledge of system purpose and or function.

Proposed Question: Common 64

Given the following:

- The operating crew initiated a manual SI due to a small break LOCA.
- Equipment failures resulted in a RED condition on the Integrity CSF Status Tree.
- NC Cooldown rate was approximately 220 deg F per hour.
- NC System temperature is currently 240 degrees F.
- The crew completed FR-P.1, Response to Imminent Pressurized Thermal Shock Condition; a soak is in progress.

Which ONE (1) of the following actions can be performed?

A. Isolate the Cold Leg Accumulators.

B. Energize PZR heaters to increase subcooling margin.

C. Initiate a 25 degree F per hour NC cooldown rate.

D. Increase CA flow to establish minimum required NR SG level.

Proposed Answer: A

Explanation (Optional):
A is correct. It does not raise pressure or reduce temperature during the soak period
B, C, and D all either raise NC pressure or reduce temperature. All distractors require understanding of soak requirements. B would normally be a prudent action if not in soak; C is a standard action in EOPs with no NC Pumps running; D is action contained in all EOPs

Technical Reference(s): FR-P.1 step 27 (Attach if not previously provided)
EP-FRP basis document, pg 43

Proposed references to be provided to applicants during examination: None

Learning Objective: EP-FRP, obj 4 (As available)

Question Source: Bank # X
Modified Bank # _____ (Note changes or attach parent)
New _____

Question History: Last NRC Exam BVPS 2005

Question Cognitive Level: Memory or Fundamental Knowledge _____
Comprehension or Analysis X

10 CFR Part 55 Content: 55.41 10
55.43 _____

Comments:

CLASSROOM TIME (Hours)

NLO	NLOR	LPRO	LPSO	LOR
		3.0	3.0	2.0

OBJECTIVES

SEQ	OBJECTIVE	NLO	NLOR	LPRO	LPSO	LOR
1	Explain the purpose of each procedure in the FR-P series. EPFRP001			X	X	
2	Discuss the entry and exit guidance for each procedure in the FR-P series. EPFRP002			X	X	
3	Discuss the mitigating strategy (major actions) of each procedure in the FR-P series. EPFRC003			X	X	X
4	Discuss the basis for any note, caution or step for each procedure in the FR-P series. EPFRP004			X	X	X
5	Given the Foldout page, discuss the actions included and the basis for these actions. EPFRP005			X	X	X
6	Given the appropriate procedure, evaluate a given scenario describing accident events and plant conditions to determine any required action and its basis. EPFRP006			X	X	X
7	Discuss the time critical task(s) associated with the FR-P series procedures including the time requirements and the basis for these requirements. EPFRP007			X	X	X

STEP 26 Check adequate NC System depressurization as follows:

PURPOSE: To determine if subcooling has been reduced to a minimum in order to minimize NC system pressure.

BASIS: Establishing NC system pressure as low as possible minimizes the pressure stress on the reactor pressure vessel. If minimum subcooling is not already established, this step instructs the operator to return to the depressurization in Step 17. Since letdown has been established, the operator should use auxiliary spray for further depressurization if normal Pzr spray is not available. The specified subcooling value does not represent a minimum limit since an operating margin of 10^0 F above the minimum is provided to allow sufficient time for stopping the depressurization. Should the minimum subcooling value be reached, the S/I pumps should be operated to maintain the minimum subcooling (as directed by the actions of Step 13.

STEP 27 Determine if NC System soak is required.

PURPOSE: To see if a "soak" period is required prior to further cooldown.

BASIS: If cold leg temperature has gone down more than 100° F in any one hour period, then a "soak" period is required to allow the thermal stresses imposed on the reactor vessel wall to decrease before further cooldown is allowed. The "soak" is a period of steady state operation during which any temperature drop or pressure rise are to be avoided. This time period allows thermal gradients in the reactor vessel wall to be reduced, thus reducing corresponding stresses. Any actions that will not cause either a cooldown or a pressure rise and are specified by any other procedure in effect are permitted during this "soak" period.

Following the "soak", a cooldown may be implemented with the following additional cooldown restrictions required in order to not challenge vessel integrity.

1. Maintain NC system pressure and T-Colds within the limits of Enclosure 3 (Post-Soak Cooldown Limit).
2. Maintain cooldown rate in cold legs less than 50^0 F in any 60 minute period.

STEP 28 Return to procedure and step in effect.

PURPOSE: To direct the operator to the proper procedure following successful completion of the steps in this procedure.

BASIS: Now that the pressure/temperature stabilization guidance presented in FR-P.1 has been completed, the operator should continue plant recovery operations by returning to the procedure and step that was in effect at the time FR-P.1 was entered.

ACTION/EXPECTED RESPONSE	RESPONSE NOT OBTAINED
26. **Check adequate NC System depressurization as follows:**	__ **RETURN TO Step 17.**
__ • NC subcooling based on core exit T/Cs - LESS THAN 10°F OR __ • NC System pressure - LESS THAN 112 PSIG.	
27. **Determine if NC System soak is required:**	
__ a. Cooldown rate in NC System cold legs - GREATER THAN 100°F IN ANY 60 MINUTE PERIOD.	__ a. **GO TO** Step 28.
b. Perform all of the following:	
__ 1) Do not cool down NC System until temperature has been stable for 60 minutes.	
__ 2) Do not raise NC pressure during that time.	
__ 3) Perform actions of other procedures in effect which do not cooldown or raise NC System pressure until the NC System temperature soak has been completed.	
4) **WHEN** NC System 60 minutes soak is complete, **THEN** cooldown may be initiated with the following limits:	
__ • Maintain NC pressure and T-Colds within the "ACCEPTABLE OPERATING REGION" of Enclosure 3 (Post-Soak Cooldown Limit).	
__ • Maintain cooldown rate in NC cold legs less than 50°F in any 60 minute period.	

Examination Outline Cross-reference:	Level	RO	SRO
	Tier #	1	
	Group #	2	
	K/A #	WE10 EK2.2	
	Importance Rating	3.6	

Knowledge of the interrelations between the (Natural Circulation with Steam Void in Vessel with/without RVLIS) and the following: Facility's heat removal systems, including primary coolant, emergency coolant, the decay heat removal systems, and relations between the proper operation of these systems to the operation of the facility.

Proposed Question: Common 65

Given the following:

- The reactor was tripped 45 minutes ago.
- All NC Pumps were tripped.
- NC System Cooldown rate could not be controlled adequately using ES-0.2, Natural Circulation Cooldown.
- The plant cooldown is being performed in accordance with ES-0.3, Natural Circulation Cooldown With Steam Void in Vessel.
- Conditions for starting an NC Pump are established.
- RVLIS Upper Range indication is 80%.

Which ONE (1) of the following describes the requirement for establishing pressurizer level prior to RCP start and the reason for the requirement?

A. Establish PZR level <90% to prevent overpressurization of the RCS due to heat input when the RCP is started.

B. Establish PZR level >90% to provide for sufficient inventory when the void is collapsed.

C. Establish PZR level 25-35% to prevent overpressurization of the RCS due to heat input when the RCP is started.

D. Establish PZR level 25 - 35% to measure void growth and account for any RCS volume changes.

Proposed Answer: B

Explanation (Optional):

A is incorrect because level is required to be 90% or higher. Credible because in some plant conditions, heat input is a concern.

B is correct.

C is incorrect because level is incorrect. Credible because it is the level required later in the procedure when void growth is being monitored

D is incorrect for same reason as C. The reason for the level is correct, but not related to NC Pump start

Technical Reference(s): ES-0.3 pg 2, 3 ,4 (Attach if not previously provided)
EP-E0, pg 171

Proposed references to be provided to applicants during examination: None

Learning Objective: ES-0.3 Obj 6 (As available)

Question Source: Bank # X (WTSI)
Modified Bank # _____ (Note changes or attach parent)
New _____

Question History: Last NRC Exam _____

Question Cognitive Level: Memory or Fundamental Knowledge X
Comprehension or Analysis _____

10 CFR Part 55 Content: 55.41 4
55.43 _____

Comments:

CLASSROOM TIME (Hours)

NLO	NLOR	LPRO	LPSO	LOR
N/A	N/A	2.0	2.0	1.0

OBJECTIVES

SEQ	OBJECTIVE	NLO	NLOR	LPRO	LPSO	LOR
1	Describe the accidents that are diagnosed in E-0 and the diagnostic sequence. EPE0001			X	X	X
2	Explain the purpose for each procedure in the E-0 series. EPE0002			X	X	
3	Discuss the entry and exit guidance for each procedure in the E-0 series. EPE0003			X	X	
4	Discuss the symptoms of a reactor trip and/or safety injection. EPE0004			X	X	
5	Discuss the mitigating strategy (major actions) of each procedure in the E-0 series. EPE0005			X	X	X
6	Discuss the basis for any note, caution or step for each procedure in the E-0 series. EPE0006			X	X	X
7	Describe the immediate actions and include the RNO when appropriate. EPE0007			X	X	X
8	Describe the actions included on the E-0 Foldout page and the basis for these actions. EPE0008			X	X	X
9	Given the Foldout page, other than E-0, discuss the actions included and the basis for these actions. EPE0009			X	X	X

ACTION/EXPECTED RESPONSE	RESPONSE NOT OBTAINED

C. Operator Actions

CAUTION **Steps 1 through 18 of EP/1/A/5000/ES-0.2 (Natural Circulation Cooldown), C. (Operator Actions) must be completed prior to entering this EP to ensure preliminary actions such as shutdown margin verification, upper head cooling, and blocking of S/I are performed.**

__ 1. **Monitor Foldout page.**

__ 2. **Check NC pump - AVAILABLE TO START.**

__ **GO TO Step 4.**

NOTE Preference should be given to running 1B NC pump to provide Pzr spray capability. If 1B NC pump is not available, running 1A NC pump along with 1 or 2 additional NC pumps may be required to provide adequate spray capability.

3. **Try to restart an NC pump:**

a. Check if NC pump seal cooling has been maintained:

__ • Seal injection flow

OR

__ • KC flow to thermal barrier.

a. Perform the following:

__ 1) Notify station management to perform a status evaluation prior to starting an NC pump.

__ 2) **GO TO** Step 4.

ACTION/EXPECTED RESPONSE	RESPONSE NOT OBTAINED
3. (Continued)	
__ b. Check "REACTOR VESSEL UR LEVEL" - GREATER THAN 95%.	b. Perform the following in anticipation of collapsing upper head void following NC pump start: __ 1) Prior to starting NC pump, raise Pzr level to 90% using charging and letdown, while maintaining charging flow less than 200 GPM. __ 2) Prior to starting NC pump, establish NC subcooling greater than 36°F using steam dump. __ 3) Use Pzr heaters as necessary to saturate Pzr water. 4) **WHEN** NC pump is started, **THEN** perform the following as necessary to maintain Pzr level greater than 4% and subcooling greater than 0°F: __ • Raise charging flow (not to exceed 200 GPM). __ • Reduce or isolate letdown. __ • **IF** Pzr level goes below 17%, **THEN** ensure Pzr heaters are off to prevent damage to heaters. __ • Monitor S/I Actuation Criteria on Foldout page.
__ c. Establish conditions for starting an NC pump and start one NC pump **PER** OP/1/A/6150/002 A (Reactor Coolant Pump Operation), Enclosure 4.1 (Startup and Operation).	__ c. **GO TO** Step 4.
__ d. **GO TO** OP/1/A/6100/002 (Controlling Procedure For Unit Shutdown).	

ACTION/EXPECTED RESPONSE	RESPONSE NOT OBTAINED
4. **Establish Pzr level to accommodate void growth:**	
__ a. Check Pzr level - BETWEEN 25% AND 35%.	a. Perform the following: __ 1) Establish saturated conditions in the Pzr before reducing Pzr level. __ 2) Control charging and letdown as necessary to restore Pzr level between 25% and 35%, while maintaining charging flow less than 200 GPM.
__ b. Place Pzr level controls in manual.	

STEP 3 Establish Pzr level to accommodate void growth:

PURPOSE: To remind the operator that he should have a saturated Pzr before he attempts to reduce Pzr level.

To ensure there is adequate volume in the Pzr, to allow for the displacement of fluid from the primary system, due to the formation of a void in the vessel.

BASIS: As the primary system is cooled and depressurized under natural circulation conditions, a potential for void formation in the upper head region exists. If a void does form, it will displace primary fluid from the vessel into the Pzr as it grows. Therefore, before any further cooldown/depressurization is performed, the Pzr level must be low enough to accommodate this void growth and high enough to cover the Pzr heaters and prevent letdown from isolating. A level between 25% and 35% satisfies these requirements.

In addition, Pzr level controls are placed in manual to allow any increase in Pzr level due to void growth.

To reduce the Pzr level in a controlled manner, saturated conditions should first be established. This allows Pzr water to flash to steam as pressure drops due to the decrease in level and minimizes the Pzr pressure decrease.

Otherwise, a fast level drop will result in a pressure loss to saturated conditions for existing Pzr liquid temperature.

STEP 4 Continue NC System cooldown and initiate depressurization as follows:

PURPOSE: To continue the NC cooldown and begin depressurization.

BASIS: This procedure is intended to allow a faster cooldown and depressurization than that outlined in ES-0.2, Natural Circulation Cooldown, while accepting limited void formation. For this reason a maximum cooldown rate of 100°F/hr is allowed, along with a minimal subcooling requirement of 20°F as measured with the core exit T/Cs. At the same time, however, the primary system pressure and temperature should be maintained within the Technical Specification limits.

Examination Outline Cross-reference:	Level	RO	SRO
	Tier #	3	
	Group #	1	
	K/A #	G2.1.10	
	Importance Rating	2.7	

Knowledge of conditions and limitations in the facility license.

Proposed Question: Common 66

Unit 1 is in Mode 3.

Which ONE (1) of the following describes the MAXIMUM NC System pressure allowed by Technical Specifications?

A. 2720 psig

B. 2735 psig

C. 2750 psig

D. 2765 psig

Proposed Answer: B

Explanation (Optional):
A is incorrect. 15 psi from actual, credible because applicant may confuse psia/psig
B is Correct. TS 2.1.2
C is incorrect. 15 psi from actual, credible because applicant may confuse psia/psig
D is incorrect. 30 psi from actual, and 15 psi from the actual psia value. Credible because applicant may confuse psia/psig

Technical Reference(s): TS 2.1.2 (Attach if not previously provided)

Proposed references to be provided to applicants during examination: None

Learning Objective: PS-IPE-13 (As available)

Question Source:	Bank #	X(WTSI)	
	Modified Bank #		(Note changes or attach parent)
	New		
Question History:	Last NRC Exam		
Question Cognitive Level:	Memory or Fundamental Knowledge	X	
	Comprehension or Analysis		
10 CFR Part 55 Content:	55.41	7	
	55.43	2	

Comments:

10.	Describe all alarms, control functions, and interlocks generated by pressurizer pressure which are not controlled by the Pressurizer Master Controller (include setpoints).		X	X	X	X
11.	Describe the protection (signals, setpoints, permissives) associated with Pressurizer pressure (logic not required).		X	X	X	X
12.	For any Pressurizer Pressure Control System input signal failure, determine the effect and evaluate operator action to be taken.			X	X	X
13.	Concerning the Technical Specifications related to the Pressurizer Pressure Control System:					
	• Given the LCO title, state the LCO (including any COLR values) and applicability.			X	X	X
	• For any LCO's that have action required within one hour, state the action.			X	X	X
	• Given a set of parameter values or system conditions, determine if any Tech. Spec. LCO's is (are) not met and any action(s) required within one hour.			X	X	X
	• Given a set of parameters or system conditions and the appropriate Tech Spec, determine the required action(s)			X	X	X
	• Discuss the bases for a given Tech. Spec. LCO or Safety Limit *** SRO ONLY**				X	*

2.0 SAFETY LIMITS (SLs)

2.1 SLs

2.1.1 Reactor Core SLs

In MODES 1 and 2, the combination of THERMAL POWER, Reactor Coolant System (RCS) highest loop average temperature, and pressurizer pressure shall not exceed the limits specified in the COLR for four loop operation; and the following SLs shall not be exceeded:

2.1.1.1 The departure from nucleate boiling ratio (DNBR) shall be maintained $\geq$1.14 for the WRB-2M CHF correlation.

2.1.1.2 The peak fuel centerline temperature shall be maintained <5080 degrees F, decreasing 58 degrees F for every 10,000 MWd/mtU of fuel burnup.

2.1.2 RCS Pressure SL

In MODES 1, 2, 3, 4, and 5, the RCS pressure shall be maintained $\leq$ 2735 psig.

2.2 SL Violations

2.2.1 If SL 2.1.1 is violated, restore compliance and be in MODE 3 within 1 hour.

2.2.2 If SL 2.1.2 is violated:

2.2.2.1 In MODE 1 or 2, restore compliance and be in MODE 3 within 1 hour.

2.2.2.2 In MODE 3, 4, or 5, restore compliance within 5 minutes.

Examination Outline Cross-reference:	Level	RO	SRO
	Tier #	3	
	Group #	1	
	K/A #	G2.1.8	
	Importance Rating	3.8	

Ability to coordinate personnel activities outside the control room.

Proposed Question: Common 67

A release of toxic fumes in the control room has rendered it uninhabitable.

Unit 1 is being placed in Hot Standby in accordance with "Loss of Control Room", (AP/1/A/5500/17).

NC System temperature continues to decrease uncontrollably below 557°F.

Which ONE (1) of the following describes the action that must be taken and how is it accomplished?

A. Request IAE to locally initiate SM Isolation

B. Locally isolate the steam dumps by closing 1SM-15.

C. Dispatch an operator to the Battery Room to open the EVDA breakers to fail the MSIVs closed.

D. Dispatch an operator to the Exterior Doghouse to close the MSIVs using the manual loaders

Proposed Answer: C

Explanation (Optional):

A is incorrect. Credible because it could isolate a source of cooldown. Incorrect because it is not performed in procedure and may not provide complete isolation

B is correct. Credible because it is a method of isolation but may not provide complete isolation

C is correct

D is incorrect. Could provide same function but would be time consuming, and is not directed by procedure

Technical Reference(s): AP-17, step 12 RNO (Attach if not previously provided)
AP-17 basis document, pg 10

Proposed references to be provided to applicants during examination: None

Learning Objective: AP/17, obj 2 (As available)

Question Source: Bank # X
Modified Bank # _____ (Note changes or attach parent)
New _____

Question History: Last NRC Exam _____

Question Cognitive Level: Memory or Fundamental Knowledge X
Comprehension or Analysis _____

10 CFR Part 55 Content: 55.41 10
55.43 _____

Comments:

CLASSROOM TIME (Hours)

NLO	NLOR	LPRO	LPSO	LOR
		1.0	1.0	1.0

OBJECTIVES

	OBJECTIVE	NLO	NLOR	LPRO	LPSO	LOR
1	Concerning AP/1(2)/5500/17 (Loss of Control Room): • State the purpose of the AP • Recognize the symptoms that would require implementation of the AP. AP17001			X	X	X
2	Given scenarios describing accident events and plant conditions, evaluate the basis for any caution, note, or step. AP17002			X	X	X

STEP 12:

PURPOSE:

Prevent an excessive cooldown to avoid a SI or a loss of shutdown margin.

DISCUSSION:

This step's action is satisfied if temperature is stable. It is also satisfied if temperature is trending to 557°F. Note that the RNO could be entered if temperature is above 557°F and going up, but no action would be performed because increasing temperature would not cause a SI or loss of shutdown margin. A subsequent step addresses getting temperature back down, if desired.

The first action attempted to reverse the cooldown is to throttle CA flow. The direction given here is consistent with the direction given in Encl 2 for the RO at the CA Panels, with the exception that at this point, CA flow must be maintained > 450 GPM until 55% level is reached in **at least one S/G**. The 450 GPM ensures the Heat Sink critical safety function is maintained. Also inferred here is that once 55% is reached, the RO will use the minimum flow necessary to maintain > 55% **in at least one S/G**, as this will minimize the cooldown. Only S/G WR level indication is available at the CA Panels, so that's the indication used.

The next action attempted (if applicable) is to isolate a failed open S/G PORV. Since the controls/indications for the motor operated isolation valve and the PORV are in the CR, an Operator is dispatched to locally close the isolation valve.

If the cooldown continues, then the MSIVs are closed. This should eliminate many possible sources of excessive steaming that may be causing the cooldown. Since their control switches are in the Control Room, an operator is dispatched to remove control power from the MSIVs. Removing control power deenergizes the safety-related solenoids, resulting in instrument air venting off the bottom of the actuator and at the same time enabling the air-assist to close function. Deenergizing one train of control power is sufficient to fail the valves closed.

Finally, if the cooldown continues, an Operator is dispatched to fail closed the SM line drain isolations (2" lines with 3/8" orifice upstream of the MSIVs). These valves fail closed on a loss of VI, so the Operator would isolate the VI to the valve operator and bleed the pressure off.

REFERENCES:
MM-10002

ACTION/EXPECTED RESPONSE	RESPONSE NOT OBTAINED
__ 12. **Check NC Cold Leg temperature - STABLE OR TRENDING TO 557°F.**	**IF NC Cold Leg temperature is less than 557°F AND going down, THEN:** a. Control CA flow as follows: __ 1) Maintain total CA flow greater than 450 GPM until at least one S/G WR level is greater than 55%. 2) **WHEN** W/R level is greater than 55% in at least one S/G, **THEN** throttle CA flow to: __ • Minimize cooldown __ • Maintain at least one S/G W/R level greater than 55%. __ b. Dispatch operator to observe operation of Unit 1 SM PORVs (from outside of doghouses). __ c. **IF** SM PORV stuck open, **THEN** dispatch operator to isolate. __ d. **IF** cooldown continues, **THEN** dispatch operator to close S/G MSIVs **PER** Enclosure 4 (Manual Closure Of Main Steam Isolation Valves). e. **IF** cooldown continues, **THEN** dispatch operator to fail the following valves closed: __ • 1SM-83 (A SM Line Drain Isol) (Unit 1 exterior doghouse, 750+7, FF-43, northwest corner of doghouse, 2 ft south of column) __ • 1SM-89 (B SM Line Drain Isol) (Unit 1 interior doghouse, 750+7, GG-53, between GG-53 and FF-53) __ • 1SM-95 (C SM Line Drain Isol) (Unit 1 interior doghouse, 750+8, FF-53, between FF-53 and FF-52) __ • 1SM-101 (D SM Line Drain Isol) (Unit 1 exterior doghouse, 750+10, FF-44, 4 ft from inner wall 3 ft from north wall).

Examination Outline Cross-reference:	Level	RO	SRO
	Tier #	3	
	Group #	2	
	K/A #	G2.2.30	
	Importance Rating	3.5	

Knowledge of RO duties in the control room during fuel handling such as alarms from fuel handling area, communication with fuel storage facility, systems operated from the control room in support of fueling operations, and supporting instrumentation.

Proposed Question: Common 68

Which ONE (1) of the following is a responsibility of the OATC during Refueling Operations?

A. Maintain a 1/M plot during fuel shuffle

B. Give permission prior to unloading each fuel assembly

C. Update the Containment Penetration Status Board

D. Update the Fuel Movement Status Computer for each fuel move as it is performed

Proposed Answer: B

Explanation (Optional):

A. Incorrect. Performed by Engineering
B. Correct.
C. Incorrect. Performed by SRO
D. Incorrect. Performed by Engineering

Technical Reference(s): FH-FC, Pg 11 (Attach if not previously provided)

Proposed references to be provided to applicants during examination: None

Learning Objective: FH-FC Obj 1 (As available)

Question Source: Bank # X

Modified Bank # _____ (Note changes or attach parent)

New _____

Question History: Vendor Bank

Question Cognitive Level: Memory or Fundamental Knowledge X

Comprehension or Analysis _____

10 CFR Part 55 Content: 55.41 10

55.43 _____

Comments:

CLASSROOM TIME (Hours)

NLO	NLOR	LPRO	LPSO	LOR
		1.5	1.5	1.5

OBJECTIVES

	OBJECTIVE	NLO	NLOR	LPRO	LPSO	LOR
1	Describe the roles and responsibilities of Control Room Operators during Fuel Handling operations.			X	X	X
2	Describe the roles and responsibilities of Fuel Handling SRO's during Fuel Handling operations.				X	X
3	Describe how monitoring of core reactivity is accomplished during Fuel Handling.			X	X	X
4	Deleted					
5	Describe the requirements that must be met before **bypassing** a Fuel Handling Interlock.			X	X	X
6	Concerning AP-25, Spent Fuel Damage; AP-40, Loss of Refueling Canal; and AP-41, Loss of Spent Fuel Cooling or Level: • State the purpose of the AP • Given symptoms, state the AP and Case (if applicable)			X	X	X
7	Concerning the Technical Specifications related to the FC System;					
	• Given the LCO title, state the LCO (including any COLR values) and applicability.			X	X	X
	• For any LCO's that have action required within one hour, state the action.			X	X	X
	• Given a set of parameter values or system conditions, determine if any Tech. Spec. is (are) not met and any action(s) required within one hour.			X	X	X
	• Given a set of plant parameters values or system conditions and the appropriate Tech Specs, determine required action(s).				X	*
	• Discuss the basis for a given Tech. Spec. LCO or Safety Limit. *** SRO only**					

The following is a specific list of Fuel Handling SRO responsibilities:

1. Ensure all fuel handling activities are performed in a safe and efficient manner.
2. Securing fuel handling operations as required by Tech Specs, Plant conditions, Safety concerns, or during times of uncertainty.
3. Should monitor refueling cavity to insure FME is being maintained.
4. Maintain constant communications with the control room during core alterations.
5. Assist the control room in monitoring refueling canal level, audible count rate and EMF or containment evacuation alarms.
6. Assist fuel handling crew in visually verifying fuel assemblies are lowered and raised safely. Gives hoist operator clearance to engage or disengage on fuel assemblies. Verifies assemblies are aligned properly and down on core plate prior to giving concurrence to disengage gripper.
7. Gives verbal clearance prior to pulling control rods during control rod latching, unlatching, and drag testing activities.
8. During core alterations, approve use of fuel handling bypass interlocks as necessary when not specified by an approved procedure (NSD 414).

Objective #1

Control Room Operators

Direct monitoring and manipulation of plant and reactor controls. Including monitoring of subcritical multiplication from nuclear instruments during core alterations. Responsible for implementing any necessary responses required by Abnormal Procedures. Logging and verifying technical specifications for MODE 6 and for core alterations. The Reactor Operator on the headset in the back of the control room communicates with the refueling crew. The Reactor Operator on the headset will get permission from the "Operator At The Controls" prior to unloading each fuel assembly. **The Operator at the Controls may stop fuel handling operations if, in his/her judgement, control room indication or communications show warranting conditions.**

Nuclear/Reactor Engineering

One responsibility is coordination of fuel movements during core loading operation by use of controlling procedure. Another is monitoring nuclear instrumentation to verify appropriate subcritical behavior and shutdown margin.

Reactor Services Technicians

One responsibility is operation of Fuel Handling Equipment in a safe manner moving fuel to locations recommended by reactor engineers by procedure. Another is the ability to recognize and properly respond to abnormal conditions.

Examination Outline Cross-reference:	Level	RO	SRO
	Tier #	3	
	Group #	2	
	K/A #	G2.2.2	
	Importance Rating	4.0	

Ability to manipulate the console controls as required to operate the facility between shutdown and designated power levels.

Proposed Question: Common 69

The following Unit 1 conditions exist:

- The reactor was operating at 78% power when a loss of A CF Pump occurred.
- The crew is taking the required actions in accordance with AP/03, "Load Rejection".
- The Reactor Operator was inserting rods in manual to lower T_{ave}.
- T_{ave} is within 1 °F of T_{ref}.
- Annunciator 1AD-2, A-9, CONTROL ROD BANK LO LIMIT, has annunciated.
- The power reduction has stopped.

Which ONE (1)of the following is the correct response to the given plant condition?

A. Shutdown margin is not sufficient for the given plant conditions and operators should emergency borate to regain the required shutdown margin.

B. The operator has driven rods in too far for the existing power level and must initiate normal boration until the Control Rod Bank Lo Limit alarm is clear.

C. Turbine load has decreased too far for the current plant conditions and must be raised.

D. The operator will ensure the alarm clears as Xenon builds in at the current power level.

Proposed Answer: D

Explanation (Optional):

A is incorrect; an action taken if it is determined that RIL LO-LO has resulted in inadequate SDM

B is incorrect; an action taken if RIL LO-LO is in and SDM is adequate

C is incorrect; Raising load would possibly bring in the LO-LO RIL alarm, as power would be higher for the current rod position

D is correct

Technical Reference(s): AP-3, Step 21 RNO (Attach if not previously provided)
AP-3, basis document, pg 19, 20, 21

Proposed references to be provided to applicants during examination: None

Learning Objective: AP-3, obj 2 (As available)

Question Source: Bank # _____
Modified Bank # X(AP03N02) (Note changes or attach parent)
New _____

Question History: Last NRC Exam _____

Question Cognitive Level: Memory or Fundamental Knowledge _____
Comprehension or Analysis X

10 CFR Part 55 Content: 55.41 10
55.43 _____

Comments:

CLASSROOM TIME (Hours)

NLO	NLOR	LPRO	LPSO	LOR
		1.0	1.0	1.0

OBJECTIVES

	OBJECTIVE	NLO	NLOR	LPRO	LPSO	LOR
1	Concerning AP/1/A/5500/03 (Load Rejection): • State the purpose of the AP • Recognize the symptoms that would require implementation of the AP. AP03001			X	X	X
2	Given scenarios describing accident events and plant conditions, evaluate the basis for any caution, note, or step. AP03002			X	X	X

ACTION/EXPECTED RESPONSE	RESPONSE NOT OBTAINED
21. (Continued)	
__ m. Check "CONTROL ROD BANK LO LO LIMIT" alarm (1AD-2, B-9) - DARK.	m. Perform the following: __ 1) Ensure a shutdown margin calculation is complete within 45 minutes of runback initiation **PER** OP/0/A/6100/006 (Reactivity Balance Calculation), Enclosure 4.4 (Shutdown Margin-Unit at Power Modes 1 and 2). 2) **WHEN** calculation complete, **THEN**: **NOTE** At EOL (NC boron less than 500 PPM), borating beyond the minimum required to restore control rods above insertion limits may complicate efforts to stabilize the unit. __ a) **IF** shutdown margin not adequate, **THEN** immediately emergency borate **PER** AP/1/A/5500/38 (Emergency Boration) to restore control rods above insertion limits. __ b) **IF** shutdown margin adequate, **THEN** borate as necessary **PER** OP/1/A/6150/009 (Boron Concentration Control) to restore control rods above insertion limits within 2 hours of runback initiation.
__ n. Check "CONTROL ROD BANK LO LIMIT" alarm (1AD-2, A-9) - DARK.	__ n. Ensure the "CONTROL ROD BANK LO LIMIT" alarm clears as Xenon builds in.

If multiple cooling circuits are out of service, transformer capacity must be limited to prevent overheating. The following relay schemes are designed to prevent the transformer from overheating:

- If power is lost to an entire cooling group and cannot be restored within 28 1/2 minutes, an automatic runback to 56% power will be initiated. If the group is still deenergized after 30 minutes, the associated generator circuit breaker will automatically open.

- If power is lost to both cooling groups and power cannot be restored to at least one group within 8 1/2 minutes, an automatic runback to 56% power will be initiated. If both groups are still deenergized after 10 minutes, the associated generator circuit breaker will automatically open. In addition to the runback, a zone lockout will occur unless power is restored to one cooling group within 30 minutes.

It should be noted that the automatic runback signals are generated by an undervoltage relay located downstream of the normal and alternate supply breakers and upstream of the 9 individual cooling circuit breakers. As long as power is sensed at these relays, there will be no runback signal generated, regardless of how many circuits are actually running.

If inadequate cooling exists, the listed enclosures will remove the affected transformer and busline from service. Validations have shown that the enclosure can be completed within 30 minutes, thus avoiding the zone lockout. Avoiding the zone lockout is desired, because (1) it prevents the zone lockout from tripping the IPB fans (2) it prevents voltage swings on the 6.9 KV switchgear during auto-fast transfer. If a zone lockout does occur, the crew must return to a previous step in the procedure to check IPB fan status.

REFERENCES:
OP/2/A/6300/001 C (Main Transformer Cooling Groups Emergency Operation)
OP/2/A/6100/0010 B (Annunciator Response for 2AD-1) (alarms C-2, C-3, C-6, and C-7)

UNIT 1 STEP 21
UNIT 2 STEP 30:

PURPOSE:

Stabilize plant.

Get an excess CF pump removed from service and tripped, if applicable. CF flow control is swapped to the Bypass Control Valves if less than 15% CF flow. Improve plant efficiency by closing CM-420. Ensure PR channels are in agreement with heat balance. Ensure T-ave surveillance is performed as required by Tech Specs. Ensure shutdown margin is met by ensuring C/R bank Lo-Lo and Lo limits are cleared.

DISCUSSION:

Reactor power less than 40% only requires one CF pump in service. This step has been added to be consistent with other procedures that involve power reductions. This action will be performed once the transient is over and relatively stable plant conditions are reached. This step eliminates the need for the operator to refer to other procedures to shutdown a CF Pump. Direction is given when backing a pump down to ensure proper CF header pressure is maintained. Once the shutdown CF pump's speed is less than 1000 RPM, it is then tripped. Having one CF pump tripped will ensure that immediate CA auto start and AMSAC if the CF pump in service were to trip later. If the CF Control Bypass Valves are full open, more CF header pressure is needed.
Below 15% power the flow control characteristics of the main control valves are poor and the level control inputs (steam flow and feed flow) are erratic. The bypass control valves are designed for the lower flow, and their inputs are better suited for low power level control. Operating procedures have CF flow swapped to CF bypasses at approximately 12%-15% reactor power. Total CF flow must be low enough such that enough flow can be supplied through the CF bypass valves. CF bypass valves provide better control at reduced CF flow.

After the transient is over, CM-420 is slowly closed and re-armed for the next load rejection. The re-arming is accomplished when the manual loader is closed. This resets the CM System load rejection signal for CM-420 and for the standby Hotwell and Condensate Booster Pumps. This is verified by OAC point M1S0331 (M2S0331 for Unit 2). This point is also indicated on the "CM" OAC graphic. It can be checked "RESET" under the "Full Load Rej" status indicator box.

A change in power level can cause a change in the flux profile in the core. The result could be a disagreement between P/R indication and heat balance. When parameter equilibrium conditions are reached (within 4 hours), the operator is directed to compare P/R's to heat balance (G.B. Swindlehurst of Safety Analysis letter to file 3/13/89). If greater than 2% difference, the assumption is the heat balance is correct, and guidance is given to have the P/Rs adjusted back to within 2%. Per Tech Specs, the P/Rs don't have to be declared inoperable, but do have to be adjusted back within 2%.

Tech Spec SR 3.4.2.1 requires Tavg in each loop to be verified $\geq$ 551°F every 30 minutes if the Tavg – Tref deviation alarm is in and Tavg is less than 561°F.

Direction is given to check the C/R Lo-Lo and Lo Limit alarms dark. If Lo-Lo lit, then shutdown margin must be verified. The RNO specifies to complete the calculation within 45 minutes to ensure some margin from the Tech Spec (3.1.5 & 3.1.6) time limit of 1 hour to either verify the shutdown margin is met or to initiate emergency boration. If the calculation shows shutdown margin is not met, the first action can't be met. However, 15 minutes remains to get emergency boration established. One additional hour is allowed to actually get the shutdown margin restored to within limits per action A.2.

Note the RNO doesn't automatically direct emergency boration if the Lo-Lo alarm is lit. Only if shutdown margin is not met. The purpose of this is to prevent unnecessary emergency boration during a load rejection event, resulting in undesirable plant reactivity transients. Normally, when these alarms are received, it is assumed that shutdown margin is not met and emergency boration is required. However, during a load rejection, if shutdown margin was met at the higher

power (alarms not in), with the decrease in power offset by control rod insertion, then shutdown margin will be met at the lower power, even though the alarms are in. This is because changing power with control rods **does not** change shutdown margin.

The following is an excerpt from PIP M-98-3114 (written to evaluate runback emergency boration requirements).
Consider two scenarios:
Scenario 1: The reactor is at 100% RTP with control bank D at 215 SWD. The reactor then trips. We all agree that shutdown margin is maintained.

Scenario 2: The reactor is at 100% RTP with control bank D at 215 SWD. The unit experiences a runback to 55% RTP, control bank D inserts below the insertion limit. Subsequently, the reactor trips. Is shutdown margin maintained? I would say yes. The NC system boron concentration has not changed during the scenario. The control rods ultimately add the same amount of negative reactivity after the trip for both scenarios. I believe the key is that the boron concentration stays the same for the short duration under discussion. Therefore, the Action statement for CTS 3.1.1.1 does not apply.

Another, yet weaker, argument is that our cores typically have excess shutdown margin. For example, for M2C12, the BOC shutdown margin is 3603 pcm and the EOC shutdown margin is 2140 pcm (vs. the required 1300 pcm). Therefore, just because rods are below the insertion limit doesn't necessarily mean that shutdown margin is lost.

The writers of the ITS must have realized that these two TS could conflict with each other. Under ITS, this becomes a non-issue. The shutdown margin spec in ITS does not apply in Mode 1. ITS allows the control rod insertion limit spec dictate actions to take in the event rods exceed the insertion limit (i.e. 2 hours to restore rods, 1 hour to verify shutdown margin). This supports the original intent of CTS during this condition; that the operators have 2 hours to recover.

Last Updated By: TDR3632: RAY, THOMAS D Team: SCB7365 Group: CEN Date: 10/05/98

<u>REFERENCES:</u>
G.B. Swindlehurst of Safety Analysis letter to file 3/13/89
Tech Spec SR 3.4.2.1
PIP M-98-3114
PIP M-04-0529

Examination Outline Cross-reference:	Level	RO	SRO
	Tier #	3	
	Group #	2	
	K/A #	G2.2.3	
	Importance Rating	3.1	

(multi-unit) Knowledge of the design, procedural, and operational differences between units.

Proposed Question: Common 70

Given the following:

- Both units are operating at 100% power.
- 'A' Train RN is operating on both units.
- Operations Test Group is performing 'B' Train RN Valve Stroke Timing.
- One section of this test is to stroke 0RN-284B, Train 1B and 2B Discharge to RC.

Which ONE (1) of the following describes the potential consequence, if any, of stroking this valve?

A. No consequence because Train 'A' RN is running on both units.

B. The RN Non-Essential Header will be isolated on Unit 1.

C. The RN Non-Essential Header will be isolated on Unit 2.

D. The RN Non-Essential Header will be isolated on BOTH Units.

Proposed Answer: C

Explanation (Optional):

C is correct. Difference between Unit 1 and Unit 2 is that non-essential headers are supplied from different trains

A is incorrect. Train B on Unit 2 would be affected. Credible because applicant could believe that with Train A running, there would be no effect

B is incorrect. Credible because applicant may have the units backwards and select the effect for the wrong unit

D is incorrect. Credible because valve description could lead applicant to misunderstand location of valve, resulting in effect on both units

Technical Reference(s): PSS-RN Pg 45, 69 (Attach if not previously provided)

Proposed references to be provided to applicants during examination: None

Learning Objective: PSS-RN Obj 13 (As available)

Question Source:
- Bank # X
- Modified Bank # _____ (Note changes or attach parent)
- New _____

Question History: Last NRC Exam McGuire 2003 NRC

Question Cognitive Level:
- Memory or Fundamental Knowledge _____
- Comprehension or Analysis X

10 CFR Part 55 Content:
- 55.41 8
- 55.43 _____

Comments:

OBJECTIVES

	OBJECTIVE	NLO	NLOR	LPRO	LPSO	LOR
8	Describe the RN System Flow path (suction source, essential and non-essential header alignment and discharge point) for the following:					
	• Normal operation	X	X	X	X	
	• Operation following a Blackout	X	X	X	X	X
	• Operation following a Safety Injection	X	X	X	X	X
9	Explain the reason for taking a suction on the low level intake.	X	X	X	X	
10	Concerning the RN essential and non-essential headers:					
	• List the loads supplied by each header	X	X	X	X	
	• Identify which loads are automatically supplied on a Blackout, Safety injection and/or Phase B.	X	X	X	X	X
11	Explain the reason for **NOT** isolating the auxiliary building non-essential header on a Blackout signal.	X	X	X	X	X
12	Describe the operation including any interlocks for the following valves:	X	X	X	X	X
	• RN42A (AB Non Ess Supply Isol)					
	• RN-70A (171B) (A(B) D/G Supply Isol)					
	• 1RN1 (Low Level Intake Isolation)					
	• Engineering Safeguards Modulating Control Valves and Reset Circuitry					
13	Describe the operational concerns when cycling RN valves that are shared between Unit 1 and Unit 2.			X	X	X
14	Given a parameter associated with the RN system, describe the indications for that parameter.	X	X	X	X	
15	Given a Limit and Precaution associated with the RN System, discuss its basis and when it applies.	X	X	X	X	X

The following is a list of shared valves that need to be evaluated prior to cycling. This may not be a complete list therefore; the RO needs to evaluate each RN valve that is cycled for the impact on his/her unit as well as the opposite unit.

0RN-2B (Train 1A & 2A RC Supply)
0RN-3A (Train 1A & 2A RC Supply)
0RN-4AC (Train 1B & 2B RC Supply)
0RN-5B (Train 1B & 2B RC Supply)
0RN-7A (Train 1A & 2A SNSWP Supply)
0RN-9B (Train 1B & 2B SNSWP Supply)
0RN-10AC (Train 1B & 2B LLI Supply)
0RN-11B (Train 1B & 2B LLI Supply)
0RN-12AC (Train 1A & 2A LLI Supply)
0RN-13A (Train 1A & 2A LLI Supply)
0RN-14A (Train 1A Suction X-Connect)
0RN-15B (Train 1B & 2B Suction X-Connect)
0RN-147AC (Train 1A & 2A Disch to RC)
0RN-148AC (Train 1A & 2A Disch to RC)
0RN-149A (Train 1A & 2A Disch to SNSWP)
0RN-150A (Train 1A & 2A Disch X-Connect)
0RN-151B (Train 1B & 2B Disch X-Connect)
0RN-152B (Train 1B & 2B Disch to SNSWP)
0RN-284B (Train 1A & 2A Disch to SNSWP)
0RN-302B (RV Supply from LLI)

2.7 Instrumentation

Objective # 14

The following parameter indications associated with the RN System are located on MC09:

- A RN Pump Discharge pressure (0 - 150 psig)
- B RN Pump Discharge pressure (0 - 150 psig)
- A RN Pump Flow (0 - 20,000 gpm)
- B RN Pump Flow (0 - 20,000 gpm)
- RN Non-essential Header Pressure (0 - 135 psig)
- RN to A KC HX Flow (0 - 10,000 gpm)
- RN to B KC HX Flow (0 - 10,000 gpm)
- RN to A NS HX Flow (0 - 5,000 gpm)
- RN to B NS HX Flow (0 - 5,000 gpm)
- RN to A D/G HX Flow (0 - 1,500 gpm)
- RN to B D/G HX Flow (0 - 1,500 gpm)
- Standby NSW Pond Temp (30 - 100 ^{0}F)
- Standby NSW Pond Level (738'11" - 741' elev.)

7.2 RN System Basic Layout (12/04/03)

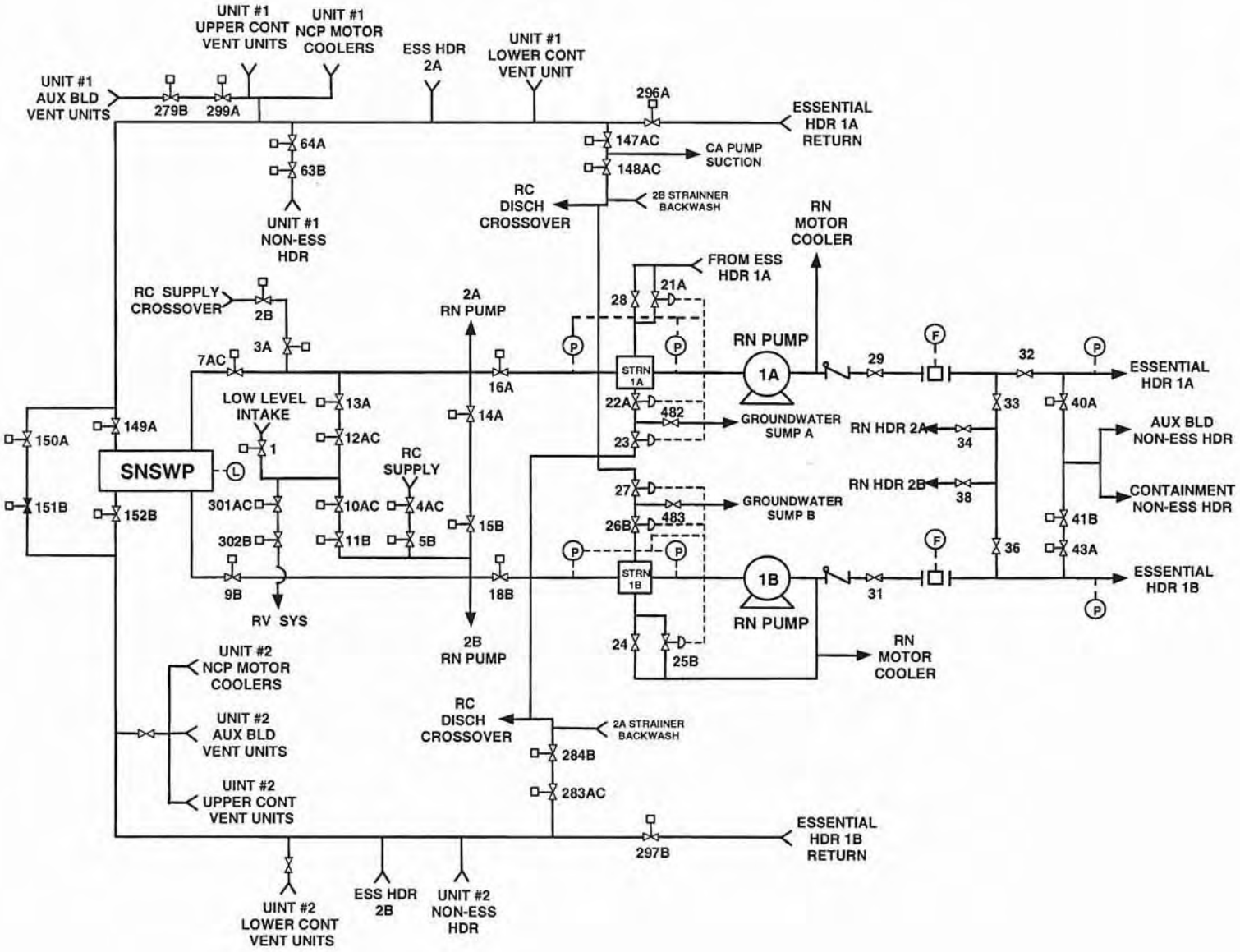

Examination Outline Cross-reference:	Level	RO	SRO
	Tier #	3	
	Group #	3	
	K/A #	G2.3.10	
	Importance Rating	2.9	

Ability to perform procedures to reduce excessive levels of radiation and guard against personnel exposure.

Proposed Question: Common 71

A rapid load reduction from 100% power to 60% power was performed on Unit 1 approximately 3 hours ago.
The following alarms are received in the control room:

- 1EMF-48 REACTOR COOLANT HI RAD
- 1EMF-18, REACTOR COOLANT FILTER 1A

Chemistry confirms that NC I-131 activity exceeds Technical Specification transient limits.
The CRSRO directs a plant shutdown to be performed.

Which ONE (1) of the following actions is subsequently performed to limit the release of activity?

A. MSIVs are closed

B. Letdown flow is raised to 120 GPM

C. S/G SM PORV setpoints are raised

D. Maximum Condensate Polishers are placed in service

Proposed Answer: B

Explanation (Optional):
A is incorrect because closing MSIVs does not prevent rad release from SG PORVs
B is correct. Raise letdown to clean up NC system
C is incorrect. Would not stop a release from SV
D is incorrect. Cation Demin may be placed in service on Letdown, but placing Condensate Demins in service would still not minimize a release off-site if SV or SG PORV lifted

Technical Reference(s): AP/1/A/5500/18 (Attach if not previously provided)
AP/18 basis document pg 4

Proposed references to be provided to applicants during examination: None

Learning Objective: AP-18 Obj 3 (As available)

Question Source: Bank # X
Modified Bank # _____ (Note changes or attach parent)
New _____

Question History: Last NRC Exam Wolf Creek 2006

Question Cognitive Level: Memory or Fundamental Knowledge X
Comprehension or Analysis _____

10 CFR Part 55 Content: 55.41 5
55.43 _____

Comments:

CLASSROOM TIME (Hours)

NLO	NLOR	LPRO	LPSO	LOR
		1	1	1

OBJECTIVES

	OBJECTIVE	NLO	NLOR	LPRO	LPSO	LOR
1	Explain the purpose for AP/18 High Activity in Reactor Coolant). AP18001			X	X	X
2	Recognize the symptoms that would require implementation of AP/18.			X	X	X
3	Given scenarios describing accident events and plant conditions, evaluate the basis for any caution, note, or step in this AP.			X	X	X

A. Purpose

The purpose of this procedure is to provide actions in the event of high activity in the NC System, and to assess plant conditions.

ACTION/EXPECTED RESPONSE	RESPONSE NOT OBTAINED

B. Symptoms

- **"1EMF-48 REACTOR COOLANT HI RAD" alarm**
- **"1EMF-18 REACTOR COOLANT FILTER 1A" alarm**
- **"1EMF-19 REACTOR COOLANT FILTER 1B" alarm**
- **Chemistry sample results indicate an unexpected increase in NC System activity.**

C. Operator Actions

__ 1. **Check 1NV-127A (L/D Hx Outlet 3-Way Temp Cntrl) - ALIGNED TO DEMIN.**	__ **Align valve to "DEMIN" position.**
2. **Determine cause of high activity:**	
__ a. Request Chemistry to check decontamination factor of mixed bed demineralizer.	
__ b. Notify Chemistry to perform an NC System isotopic analysis to determine if high activity is from a crud burst or failed fuel.	
__ 3. **IF AT ANY TIME it is determined that high activity is from crud burst, THEN raise letdown flow to 120 GPM.**	

ACTION/EXPECTED RESPONSE	RESPONSE NOT OBTAINED

4. **IF AT ANY TIME it is determined that high activity is from failed fuel, THEN:**

   __ a. Ensure mixed bed demineralizer in service.

   __ b. Notify Chemistry to consult with Reactor Group and RP to determine if the cation bed demineralizer should be placed in service.

   __ c. **IF AT ANY TIME** Chemistry requests cation bed demineralizer be placed in service, **THEN** place in service **PER** OP/1/A/6200/001D (Chemical and Volume Control System Demineralizers), Enclosure 4.3 (Removing/Returning the Cation Bed Demineralizer from/to Service).

   __ d. **REFER TO** RP/0/A/5700/000 (Classification of Emergency).

   __ e. Notify Reactor Group to perform OP/0/A/6550/017 (Estimate of Failed Fuel Based on Iodine-131 Concentration).

__ 5. **Notify Radwaste to ensure VCT H_2 purge flow is established.**

__ 6. **REFER TO Tech Spec 3.4.16 (RCS Specific Activity).**

END

STEP 3:

PURPOSE:

Reduce redeposition of crud throughout the plant.

DISCUSSION:

At the normal letdown flow rate of 75 gpm, it takes almost 21 hours to pass one entire volume of reactor coolant through the NV System. But a letdown flow of 120 gpm will circulate one entire volume of reactor coolant in approximately 12 hours (at 120 gpm letdown flow, 50% of the crud is removed every 12 hours).

REFERENCES:
Primary Chemistry Lesson Plan OP-MC-CH-PC

STEP 4:

PURPOSE:

To clean up high activity associated with failed fuel and ensure appropriate classification of emergency is made.

DISCUSSION:

Step 4.a ensures mixed bed demin in service to facilitate removal of both the ion types produced by failed fuel (halogens and soluble metal ions).

Step 4.b notifies Chemistry to determine if the cation bed should be placed in service so they can get with Reactor Group, RP, and themselves to weigh the pros and cons of placing the cation bed in service. While the cation will remove the soluble metal ions like Cesium, in doing so it will also remove the Lithium ion that is used for PH control. Operating with PH out of spec must be weighed against the urgency of removing the failed fuel ions (dose control, etc.)

Step 4.c gets the cation bed in serivce, if requested using the OP.

Step 4.d is a reference to RP/0/A/5700/000 (Classification of Emergency) to ensure the proper declaration is made. If a plant shutdown required by T.S. 3.4.16 (RCS Specific Activity) is commenced, a Notification of Unusual Event is declared based on failed fuel. For grosser failures beyond the T.S. limits, other classification levels may be reached.

Step 4.e is a quick gross guess at the extent of the failed fuel. The Reactor Group has more qualitative tools that they'll implement as warranted, but this is a quick estimate. Basically, this procedure takes the I-131 concentration in uCI/ml and divides by a number depending on initial conditions (normal, clad damage, severe fuel overtemperature, or fuel melting), with correction factors for sampling temperature and power history:

A. Normal:	I-131 uCI/ml ÷ 1.8 uCI/ml = Percent failed fuel
B. Clad damage	I-131 uCI/ml ÷ 83.7 uCI/ml = Percent failed fuel
C. Severe Fuel Overtemperature	I-131 uCI/ml ÷ 1535 uCI/ml = Percent failed fuel
D. Fuel Melting	I-131 uCI/ml ÷ 2790 uCI/ml = Percent failed fuel

As seen above, the more the fuel cladding is stressed by the failed fuel mechanism, the more activity is expected for a given percentage of failed fuel.

REFERENCES:
RP/0/A/5700/000 (Classification of Emergency), OP/0/A/6550/17 (Estimate of Failed Fuel Based on Iodine-131)

Examination Outline Cross-reference:	Level	RO	SRO
	Tier #	3	
	Group #	3	
	K/A #	G2.3.4	
	Importance Rating	2.5	

Knowledge of radiation exposure limits and contamination control, including permissible levels in excess of those authorized.

Proposed Question: Common 72

A Duke employee has received radiation exposure (TEDE) of 1649 mRem this year.

Which ONE (1) of the following describes the MAXIMUM amount of exposure he may receive without reaching the Duke Administrative limit, and the MAXIMUM amount of exposure he may receive prior to reaching the 10CFR20 limit?

A. 150 mRem; 1350 mRem

B. 150 mRem; 3350 mRem

C. 350 mRem; 1350 mRem

D. 350 mRem; 3350 mRem

Proposed Answer: D

Explanation (Optional):
A is incorrect. First value is for Duke EXCLUDE limit. 2nd is lower than allowed for 10CFR20
B is incorrect. First value is for EXCLUDE limit
C is incorrect. 2nd value is lower than allowed for 10CFR20
D is correct.

Technical Reference(s): RWT Handbook Pg 24 (Attach if not previously provided)
10CFR20

Proposed references to be provided to applicants during examination: None

Learning Objective: RAD-RP Obj 19 (As available)

Question Source: Bank # _____

Modified Bank # _____ (Note changes or attach parent)

New X

Question History: Last NRC Exam _____

Question Cognitive Level: Memory or Fundamental Knowledge X

Comprehension or Analysis _____

10 CFR Part 55 Content: 55.41 12

55.43 _____

Comments:

INSTRUCTOR ACTIVITY

	OBJECTIVE	RWT Page #	Section #
18	Define the following terms: • Deep Dose Equivalent (DDE) • Total Effective Dose Equivalent (TEDE) • Committed Dose Equivalent (CDE) • Lens Dose Equivalent (LDE) • Shallow Dose Equivalent (SDE)	27 - 28	4.1
19	List the Duke Power Company administrative and NRC 10CFR20 limits for: • Adult Total Effective Dose Equivalent • Adult Eye Dose Equivalent (Lens of the eye) • Adult Shallow dose equivalent to the skin and extremities • Individual organ or tissue • Minors • Declared "pregnant" woman • Planned Special Exposures	29	4.1
20	State four possible consequences if any NRC radiation dose limit is exceeded.	30	4.2
21	State two options a worker's supervisor has when he/she is notified that the worker is approaching an administrative exposure limit.	30	4.4
22	Define the "Alert" and "Exclude" exposure status for an individual.	31	4.4
23	State who (by title) controls annual dose targets below 2.0 rem for individual workers.	30	4.4

Note: For objective #23, the OSM or Day Staff Manager is the " Section Manager " counterpart for Operations personnel.

10CFR20 Limits/Duke Limits

Conditions of Exposure	NRC(10CFR20) Limits	Duke Basic Administrative Control	Duke Maximum Administrative Control
Adult Total Effective Dose Equivalent (TEDE)	5.0 rem/year	2.0 rem/year	5.0 rem/year
Adult Lens Dose Equivalent (LDE) (Lens of Eye)	15.0 rem/year		15.0 rem/year
Adult Shallow-Dose Equivalent (SDE) 1. Skin 2. Extremities	50 rem/year		50 rem/year
Any Internal Organ (CDE) (for example, thyroid)	50 rem/year		50 rem/year
Minors (less than 18 years of age)	10 % of adult limit and may not enter a High Radiation Area		2% of adult and may not enter a High Radiation Area
Declared Pregnant Worker (TEDE)	500 mrem /pregnancy	50 mrem/month	500 mrem /pregnancy
Planned Special Exposure (PSE)	Lifetime PSE limits are five times the TEDE/LDE/SDE limits. Annual PSE limits equal the TEDE/LDE/SDE limits.	Lifetime PSE limits are five times the TEDE/LDE/SDE limits. Annual PSE limits equal the TEDE/LDE/SDE limits.	Lifetime PSE limits are five times the TEDE/LDE/SDE limits. Annual PSE limits equal the TEDE/LDE/SDE limits.
Emergency Exposure	See EPA-400-92-001	See site emergency plan	See site emergency plan

If the radiation worker is found to have exceeded, or is within 50 mrem of the 500 mrem allowed by the time the pregnancy is declared, a limit of 50 mrem for the remainder of the pregnancy will be applied.

Examination Outline Cross-reference:	Level	RO	SRO
	Tier #	3	
	Group #	4	
	K/A #	G2.4.24	
	Importance Rating	3.3	

Knowledge of loss of cooling water procedures.

Proposed Question: Common 73

Given the following plant conditions:

- Unit 2 is at 50% power.
- All systems are in automatic.
- "A" Train KC is in operation.

Which ONE (1) of the following lists of conditions would require entry into AP/2/A/5500/21, Loss of KC or KC System Leakage?

A. KC surge tank level increasing;
NCP stator winding temperatures increasing;
Thermal barrier KC auto isolation.

B. KC-132, Letdown Heat Exchanger outlet temperature control valve, throttling open;
NCP motor bearing temperature increasing;
NCP lower bearing low flow alarm.

C. KC-132, Letdown Heat Exchanger outlet temperature control valve, throttling closed;
NCP motor bearing temperature increasing;
RN non-essential header pressure low.

D. KC surge tank abnormal level alarm;
NCP seal temperature increasing;
NCP stator winding temperature increasing.

Proposed Answer: B

Explanation (Optional):
B is correct; indicative of KC System leak on RCP header (Non-Essential)
A is incorrect; indicative of NCP TBHX rupture
C is incorrect; indicative of RN system failure, go to AP-020
D is incorrect ; indicative of leak into KC and/or NCP problem

Technical Reference(s): AP 21 pg 2 (Attach if not previously provided)
AP 08 pg 2
AP 20, pg 15

Proposed references to be provided to applicants during examination: None

Learning Objective: None (As available)

Question Source: Bank # X(PSSKC049)
Modified Bank # _____ (Note changes or attach parent)
New _____

Question History: Last NRC Exam _____

Question Cognitive Level: Memory or Fundamental Knowledge _____
Comprehension or Analysis X

10 CFR Part 55 Content: 55.41 10
55.43 _____

Comments:

ACTION/EXPECTED RESPONSE	RESPONSE NOT OBTAINED

B. Symptoms

- **"LO KC HX A INLET FLOW" computer alarm**
- **"LO KC HX B INLET FLOW" computer alarm**
- **Low flow alarms on components supplied by KC**
- **High temperature alarms on components supplied by KC**
- **Low level or level going down in KC Surge Tank**
- **Abnormal KC pump Flow**
- **"LO KC SURGE TANK COMPARTMENT A LEVEL" computer alarm**
- **"LO KC SURGE TANK COMPARTMENT B LEVEL" computer alarm**
- **"KC SURGE TANK ABNORMAL LEVEL" alarm.**

C. Operator Actions

__ 1. **Check any KC pump - ON.**	**Perform the following:** a. Isolate: __ • Normal letdown __ • Excess letdown __ • ND letdown. __ b. Close all NM valves located on 1MC-8 (vertical board).
__ 2. **Monitor Foldout page.**	
__ 3. **Secure any dilution in progress.**	
__ 4. **Check ND - IN RHR MODE.**	__ **GO TO Step 7.**

ACTION/EXPECTED RESPONSE	RESPONSE NOT OBTAINED

B. Symptoms

- **NC pump number 1 seal leakoff flow going up**
- **NC pump number 1 seal leakoff flow going down**
- **NC pump number 1 seal outlet temperature going up**
- **NC pump lower bearing temperature going up**
- **"NC PMP NO. 1 SEAL LO D/P" alarm.**

C. Operator Actions

1. **Check NC pump parameters within operating limits:**

   __ • All NC pump lower bearing temperatures - LESS THAN 225°F

   __ • All NC pump number 1 seal outlet temperatures - LESS THAN 235°F

   __ • All NC pump number 1 seal D/Ps - GREATER THAN 200 PSID.

__ 2. **IF AT ANY TIME any operating limit exceeded, THEN GO TO Step 4.**

__ 3. **GO TO Step 5.**

4. **Stop affected NC pump as follows:**

   a. **IF** A or B NC pump is the affected pump, **THEN** close associated spray valve:

   __ • 1NC-27 (A Loop PZR Spray Control)

   __ • 1NC-29 (B Loop PZR Spray Control).

   __ b. Check all NC pump number 1 seal leakoff flows - LESS THAN 6 GPM.

__ **IF trip criteria valid, THEN GO TO Step 4.**

__ b. Observe Caution prior to Step 4.e and **GO TO** Step 4.e.

ACTION/EXPECTED RESPONSE	RESPONSE NOT OBTAINED
18. **Check NC pumps:**	
__ a. Any NC pump - ON.	__ a. **GO TO** Step 19.
__ b. NC pump stator winding temperature - LESS THAN 311°F.	b. Perform the following: __ 1) Secure any dilution in progress. 2) Open: __ • 1NV-221A (NV Pumps Suct From FWST) __ • 1NV-222B (NV Pumps Suct From FWST). 3) Close: __ • 1NV-141A (VCT Outlet Isol) __ • 1NV-142B (VCT Outlet Isol). __ 4) Start TD CA pump. __ 5) Maintain S/G NR levels greater than 17% to avoid auto start of MD CA pumps. __ 6) Trip reactor. __ 7) **WHEN** reactor is tripped, **THEN** trip all NC pumps. __ 8) Have available operator continue to monitor bearing temperatures on running pumps. __ 9) **WHEN** time allows, **THEN** continue with Case I, starting at Step 19. __ 10) **GO TO** EP/1/A/5000/E-0 (Reactor Trip or Safety Injection).
__ c. Monitor stator winding temperatures.	
__ d. **IF AT ANY TIME** NC pump stator winding temperature exceeds 311°F, **THEN** perform Step 18.	

Examination Outline Cross-reference:	Level	RO	SRO
	Tier #	3	
	Group #	4	
	K/A #	G2.4.32	
	Importance Rating	3.3	

Knowledge of operator response to loss of all annunciators.

Proposed Question: Common 74

Given the following conditions:

- Unit 1 is at 100% power.
- It is discovered that ALL Main Control Board annunciators are inoperable.

Which ONE (1) of the following describes the action required?

A. Initiate a plant shutdown to Mode 3 and initiate increased monitoring of parameters.

B. Maintain plant conditions stable and refer to the Emergency Plan for event classification.

C. Trip the reactor and refer to the Emergency Plan for event classification.

D. Trip the reactor and initiate increased monitoring of plant parameters.

Proposed Answer: B

Explanation (Optional):
B is correct.
A, C, and D are incorrect because a plant shutdown or reactor trip will not be performed with the plant at steady state 100% power conditions

Technical Reference(s): RP/O/A/5700/000 Encl 4.2, pg 1 (Attach if not previously provided)

Proposed references to be provided to applicants during examination: None

Learning Objective: OP-MC-EP-EMP 10 (As available)

Question Source:	Bank #		
	Modified Bank #		(Note changes or attach parent)
	New	X	
Question History:	Last NRC Exam		
Question Cognitive Level:	Memory or Fundamental Knowledge		
	Comprehension or Analysis	X	
10 CFR Part 55 Content:	55.41	10	
	55.43		

Comments:

This item may not be appropriate for ROs, there is NO guidance available for what to do outside of the E-Plan.

	OBJECTIVE	NLO	NLOR	LPRO	LPSO	LOR
10	Given the EPIP's and the emergency situation, classify the event.				X	X
11	Given the EPIP's and the emergency situation, provide the appropriate Protective Action Recommendations (PAR's).				X	X
12	Given the EPIP's and the emergency situation, complete the Emergency Notification Form.				X	X
13	Describe the use of the Selective Signaling Phone System to notify the State and County.	X	X	X	X	X
14	Given the EPIP's and the emergency situation, complete the appropriate portions of the procedure for an NRC Event Notification Worksheet.				X	X

Enclosure 4.2

System Malfunctions

UNUSUAL EVENT

4.2.U.1 Inability to Reach Required Shutdown Within Technical Specification Limits.

OPERATING MODE: 1, 2, 3, 4

4.2.U.1-1 Plant is not brought to required operating mode within Technical Specifications LCO Action Statement Time.

4.2.U.2 Unplanned Loss of Most or All Safety System Annunciation or Indication in the Control Room for Greater Than 15 Minutes.

OPERATING MODE: 1 , 2, 3, 4

4.2.U.2-1 The following conditions exist:

Unplanned loss of most (>50%) annunciators associated with safety systems for greater than 15 minutes.

AND

In the opinion of the Operations Shift Manager/Emergency Coordinator/EOF Director, the loss of the annunciators or indicators requires additional personnel (beyond normal shift compliment) to safely operate the unit.

CONTINUED

ALERT

4.2.A.1 Unplanned Loss of Most or All Safety System Annunciation or Indication in Control Room With Either (1) a Significant Transient in Progress, or (2) Compensatory Non-Alarming Indicators Unavailable.

OPERATING MODE: 1, 2, 3, 4

4.2.A.1-1 The following conditions exist:

Unplanned loss of most (>50%) annunciators associated with safety systems for greater than 15 minutes.

AND

In the opinion of the Operations Shift Manager/Emergency Coordinator/EOF Director, the loss of the annunciators or indicators requires additional personnel (beyond normal shift compliment) to safely operate the unit.

AND

EITHER of the following:

- A **significant** plant **transient** is in progress.

OR

- Loss of the OAC.

END

SITE AREA EMERGENCY

4.2.S.1 Inability to Monitor a Significant Transient in Progress.

OPERATING MODE: 1, 2, 3, 4

4.2.S.1-1 The following conditions exist:

Loss of most (>50%) annunciators associated with safety systems.

AND

A **significant** plant **transient** is in progress.

AND

Loss of the OAC.

AND

Inability to provide manual monitoring of any of the following Critical Safety Functions:

- subcriticality
- core cooling
- heat sink
- containment.

END

GENERAL EMERGENCY

END

Examination Outline Cross-reference:	Level	RO	SRO
	Tier #	3	
	Group #	4	
	K/A #	G2.4.18	
	Importance Rating	2.7	

Knowledge of the specific bases for EOPs.

Proposed Question: Common 75

Given the following conditions:

- SI actuated due to a LOCA.
- BOTH NI Pumps are TRIPPED.
- NC pressure is 1050 PSIG.
- NC System Subcooling is -1°F
- Containment pressure is 2.8 psig.
- All other equipment is running per design.
- The crew is performing actions of EP 1/A/5000/E-0, Reactor Trip or Safety Injection.

Which ONE (1) of the following describes the required action and reason for the action with respect to the NC Pumps?

A. Stop all NC Pumps to minimize fluid mass loss out of the break.

B. Stop all NC Pumps to prevent mechanical damage to the pump and motor.

C. Leave all NC Pumps running to provide forced cooling flow of the NC System.

D. Leave all NC Pumps running to prevent phase separation of NC liquid.

Proposed Answer: A

Explanation (Optional):

A. Correct. SBLOCA, NC mass loss is the concern.
B. Incorrect. NC Pumps would be tripped for this reason because CCW (KC) is isolated and Phase B and Spray is flowing at 3 psig Ctmt pressure
C. Incorrect. Would NOT leave running. NC Subcooling is lost.
D. Incorrect. Would NOT leave running. Phase separation may occur in SBLOCAs after NC Pumps are tripped, leading to core uncovery.

Technical Reference(s): E-0 Foldout page (Attach if not previously provided)
E-0 basis document pg 67

Proposed references to be provided to applicants during examination: None

Learning Objective: E-0 LP Obj 6 (As available)

Question Source: Bank # X
Modified Bank # _____ (Note changes or attach parent)
New _____

Question History: Last NRC Exam Callaway 2005

Question Cognitive Level: Memory or Fundamental Knowledge _____
Comprehension or Analysis X

10 CFR Part 55 Content: 55.41 X
55.43 _____

Comments:

CLASSROOM TIME (Hours)

NLO	NLOR	LPRO	LPSO	LOR
N/A	N/A	2.0	2.0	1.0

OBJECTIVES

SEQ	OBJECTIVE	NLO	NLOR	LPRO	LPSO	LOR
1	Describe the accidents that are diagnosed in E-0 and the diagnostic sequence. EPE0001			X	X	X
2	Explain the purpose for each procedure in the E-0 series. EPE0002			X	X	
3	Discuss the entry and exit guidance for each procedure in the E-0 series. EPE0003			X	X	
4	Discuss the symptoms of a reactor trip and/or safety injection. EPE0004			X	X	
5	Discuss the mitigating strategy (major actions) of each procedure in the E-0 series. EPE0005			X	X	X
6	Discuss the basis for any note, caution or step for each procedure in the E-0 series. EPE0006			X	X	X
7	Describe the immediate actions and include the RNO when appropriate. EPE0007			X	X	X
8	Describe the actions included on the E-0 Foldout page and the basis for these actions. EPE0008			X	X	X
9	Given the Foldout page, other than E-0, discuss the actions included and the basis for these actions. EPE0009			X	X	X

1. **NC Pump Trip Criteria:**

   - **IF** the following conditions are satisfied, **THEN** trip all NC pumps while maintaining seal injection flow:

     - At least one NV or NI pump on
     - NC subcooling based on core exit T/Cs less than or equal to 0°F.

2. **CA Suction Sources:**

   - **IF** CA Storage Tank (water tower) goes below 1.5 ft, **THEN** perform EP/1/A/5000/G-1 (Generic Enclosures), Enclosure 20 (CA Suction Source Realignment).

3. **Position Criteria for 1NV-150B and 1NV-151A (NV Pumps Recirculation):**

   - **IF** NV S/I flowpath aligned **AND** NC pressure is less than 1500 PSIG, **THEN** close 1NV-150B and 1NV-151A.
   - **IF** NC pressure is greater than 2000 PSIG, **THEN** open 1NV-150B and 1NV-151A.

4. **Cold Leg Recirc Switchover Criteria:**

   - **IF** S/I has occurred, **AND** FWST level reaches 180 inches ("FWST LEVEL LO" alarm), **THEN GO TO** EP/1/A/5000/ES-1.3 (Transfer To Cold Leg Recirc).

3.5. E-0 Enclosures

Enclosure 1 - Foldout

1. NC Pump Trip Criteria

- **IF** the following conditions are satisfied, **THEN** trip all NC pumps while maintaining seal injection flow:
  - At least one NV or NI pump on
  - NC subcooling based on core exit T/Cs less than or equal to 0°F.

BASIS: Tripping the NC pumps, when the trip criteria is reached during accident conditions, is done to prevent excessive depletion of NC System water inventory through a small break in the NC System which might lead to severe core uncovery if the NC pumps were tripped for some reason later in the accident.

The effectiveness of the NC Pump #1 seal is not affected by pump rotation. To ensure continued performance of the seal, cool filtered water should be continuously supplied. The operator should not isolate the seal injection lines unless directed to in the procedures.

2. CA Suction Sources

- **IF** CA Storage Tank (water tower) goes below 1.5 ft. **THEN** perform EP/1/A/5000/G-1 (Generic Enclosures), Enclosure 20 (CA Suction Source realignment).

BASIS: This item requires the operator to monitor the CA storage tank (Water Tower)level and implement the enclosure if required, to assure a source of water to the CA pumps.

The CA Storage Tank is the primary water source for the CA Pumps and the only tank aligned. Prior to the tank emptying the operator implements G-1 Enclosure 20, which directs aligning the RN supply and isolating the normal pump suction.