U.S.NRC
UNITED STATES NUCLEAR REGULATORY COMMISSION
Protecting People and the Environment

NRC Licensing of Sealed Radioactive Sources

Commissioner Edward McGaffigan, Jr.

July 12, 2007

U.S.NRC
UNITED STATES NUCLEAR REGULATORY COMMISSION
Protecting People and the Environment

IAEA Category 2 Thresholds

Radionuclide	Quantity of Concern
Californium-242	5.4 curies
Cobalt-60	8.1 curies
Radium-226	11 curies
Curium-244	14 curies
Americium-241,Americium-241/Be, Plutonium-238, Plutonium-239/Be	16 curies
Iridium-192	22 curies
Cesium-137	27 curies
Selenium-75	54 curies
Ytterbium-169	81 curies
Gadolinium-153, Strontium-90	270 curies
Thulium-170	5,400 curies
Promethium-147	11,000 curies

IAEA Code of Conduct

Americium-241	
Category 1	1,600 curies and above
Category 2	16- 1,600 curies
Category 3	1.6 – 16 curies
Category 4	0.016 – 1.6 curies
Category 5	< 0.016 curies

IAEA Code of Conduct

Cesium-137	
Category 1	2,700 curies and above
Category 2	27- 2,700 curies
Category 3	2.7 – 27 curies
Category 4	0.027 – 2.7 curies
Category 5	< 0.027 curies

IAEA Code of Conduct

Implementation of IAEA Code of Conduct Import/Export Controls on Category 1 and Category 2 Sources

- Proposed rule – September 2004
- Final rule - July 2005
- Guidance issued – December 2005
- Effective date – December 2005

Post 9/11 Security Initiatives

- September 2001: Immediate Issuance of Security Advisories to NRC Licensees
- November 2001: Security Advisory on the Tracking of Highway Route Controlled Quantities.
- June 2002: Established NRC/DOE Working Group on Radiological Dispersion Devices (RDDs).
- May 2003: NRC/DOE Radiological Dispersion Device Report

Post 9/11 Security Initiatives

- June 2003: NRC Orders for Irradiators
- October 2003: Initial Interim Database for Category 1 and 2 Sources
- January 2004: NRC Orders for Manufacturers and Distributors - 61 licensees
- July 2005: Proposed Rule on National Source Tracking System (NSTS)

Post 9/11 Security Initiatives

- August 2005: NRC Orders for Transportation of Radioactive Materials in Quantities of Concern
- November/December 2005: NRC Orders and Agreement State Controls for Irradiators and Medical licensees, Radiographers, Broad Scope and Master Material licensees, Calibration facilities, etc.
- May 2006: Initial implementation of Pre-licensing guidance

Post 9/11 Security Initiatives

- August 2006: Radiation Source Protection and Security Task Force Report to Congress and the President (Response to 2005 Energy Policy Act)
- October 2006: Issuance of Orders requiring Fingerprinting and Criminal History Records Check for Unescorted Access to Irradiators, Manufacturers and Distributors, and those that Possess and Transfer Radioactive Material in Quantities of Concern

Post 9/11 Security Initiatives

- November 2006: Full Implementation of Pre-licensing guidance
- November 2006: Final NSTS Rule (Effective November 2007), but due to development issues, effective date now estimated late 2008
- January 2007: Commenced collection of data on sources that are ten times the Code of Conduct Category 4 threshold

U.S.NRC
UNITED STATES NUCLEAR REGULATORY COMMISSION
Protecting People and the Environment

Post 9/11 Planned Security Activities

- Fall 2007: Issuance of Orders requiring Fingerprinting and Criminal History Records Check for additional licensees
- Fall 2008: Commission Decision on expansion of NSTS to Category 3 sources
- Late 2008: NSTS full implementation

U.S.NRC
UNITED STATES NUCLEAR REGULATORY COMMISSION
Protecting People and the Environment

Post 9/11 Planned Security Activities

- December 2008: Proposed Rule (codifying orders) for enhanced security of material facilities
- October 2009: Web-based licensing implementation
- December 2009: Final Rule on enhanced security at materials facilities

U.S. Materials Licenses by State

State	Number of Licensees		
	NRC	Agreement States	
Alabama	18	437	yes
Alaska	56	0	
Arizona	11	330	yes
Arkansas	7	248	yes
California	47	2,029	yes
Colorado	20	353	yes
Connecticut	193	0	
Delaware	60	0	
District of Columbia	41	0	
Florida	15	1,606	yes
Georgia	16	526	yes
Hawaii	59	0	
Idaho	82	0	
Illinois	37	742	yes
Indiana	278	0	
Iowa	2	177	yes
Kansas	12	301	yes
Kentucky	10	435	yes
Louisiana	10	551	yes
Maine	2	129	yes
Maryland	61	610	yes
Massachusetts	27	513	yes
Michigan	536	0	
Minnesota	13*	200	yes
Mississippi	5	320	yes
Missouri	297	0	
Montana	77	0	
Nebraska	3	149	yes
Nevada	3	275	yes
New Hampshire	4	79	yes
New Jersey	510	0	
New Mexico	14	193	yes
New York	38	1,505	yes
North Carolina	18	673	yes
North Dakota	10	64	yes
Ohio	50	817	yes
Oklahoma	26	245	yes
Oregon	4	484	yes
Pennsylvania	697	0	
Rhode Island	1	59	yes
South Carolina	15	369	yes
South Dakota	41	0	
Tennessee	23	601	yes
Texas	43	1,630	yes
Utah	11	183	yes
Vermont	38	0	
Virginia	386	0	
Washington	19	429	yes
West Virginia	182	0	
Wisconsin	29	342	yes
Wyoming	78	0	
Others**	152	0	
TOTAL:	**4,528**	**17,604**	

*As of August 2006 (Minnesota State effective March 31, 2006). **"Others" includes U.S. territories such as Puerto Rico, Virgin Islands, and Guam.
Note: Agreement States data are latest available as of February 8, 2005. NRC data as of March 29, 2006.

U.S.NRC
UNITED STATES NUCLEAR REGULATORY COMMISSION
Protecting People and the Environment

Category 1 & 2 sources in Michigan

	IAEA Category	Sources	Devices	Licensees
Self-shielded irradiators	1 or 2	33	28	13
Panoramic irradiators	1	0	0	0
Gamma Knives & Teletherapy devices	1	404	4	2
Radiography	2	68	68	6
Well-logging	2 or 3	0	0	0

Total quantities of radioactive material

Americium-241	0 Curies
Cobalt-60	32,886 Curies
Cesium-137	40,811 Curies
Iridium-192	3,790 Curies

U.S.NRC
UNITED STATES NUCLEAR REGULATORY COMMISSION
Protecting People and the Environment

Category 1 & 2 sources in Minnesota

	IAEA Category	Sources	Devices	Licensees
Self-shielded irradiators	1 or 2	16	13	6
Panoramic irradiators	1	0	0	0
Gamma Knives & Teletherapy devices	1	403	3	3
Radiography	2	19	19	7
Well-logging	2 or 3	0	0	0

Total quantities of radioactive material

Americium-241	0 Curies
Cobalt-60	23,019 Curies
Cesium-137	27,796 Curies
Iridium-192	1,154 Curies

U.S.NRC
UNITED STATES NUCLEAR REGULATORY COMMISSION
Protecting People and the Environment

Typical Moisture Density Gauge

Backup Slides: Source Design

U.S.NRC
UNITED STATES NUCLEAR REGULATORY COMMISSION
Protecting People and the Environment

Typical Encapsulation

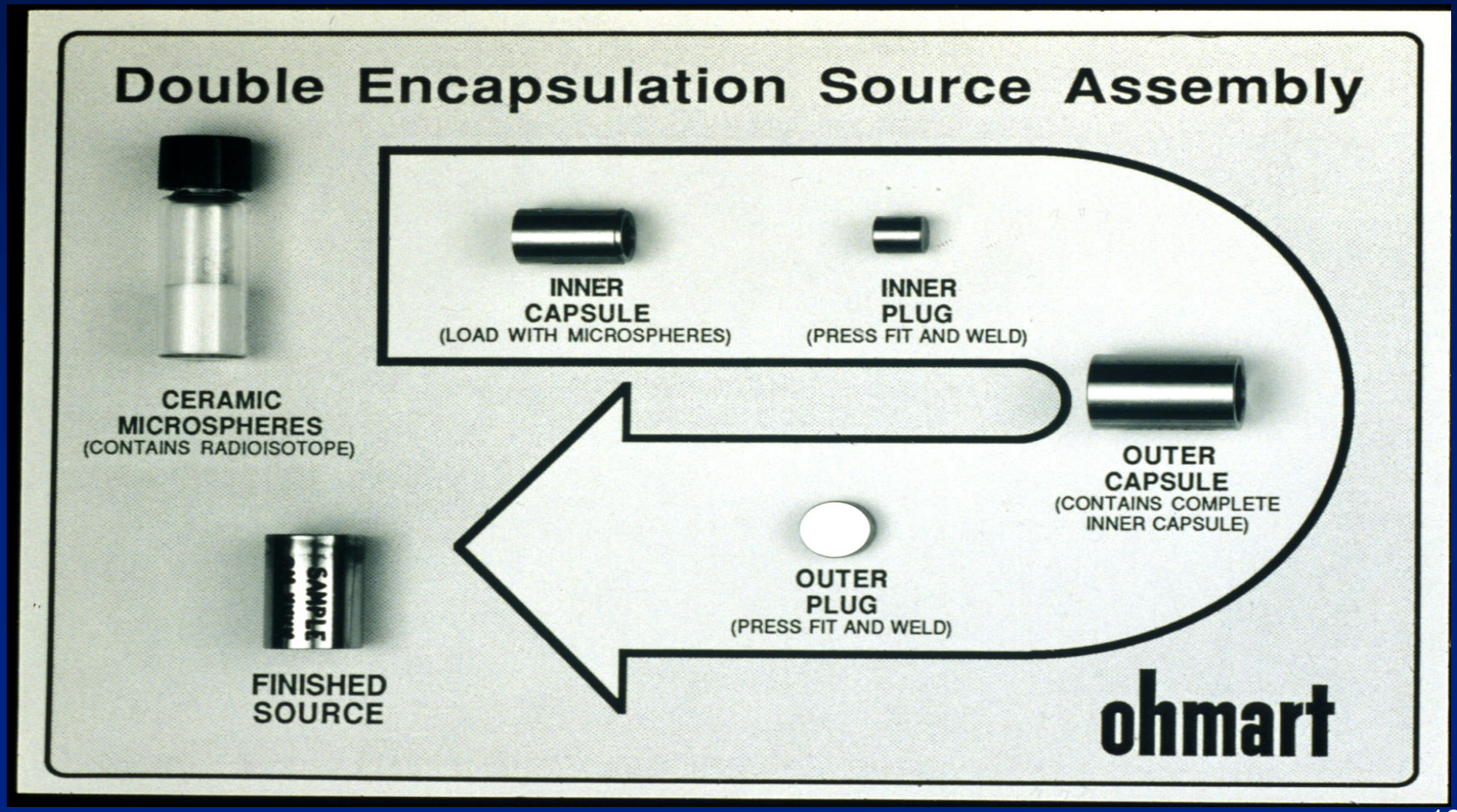

Source Cutaway Drawing: Cesium-137

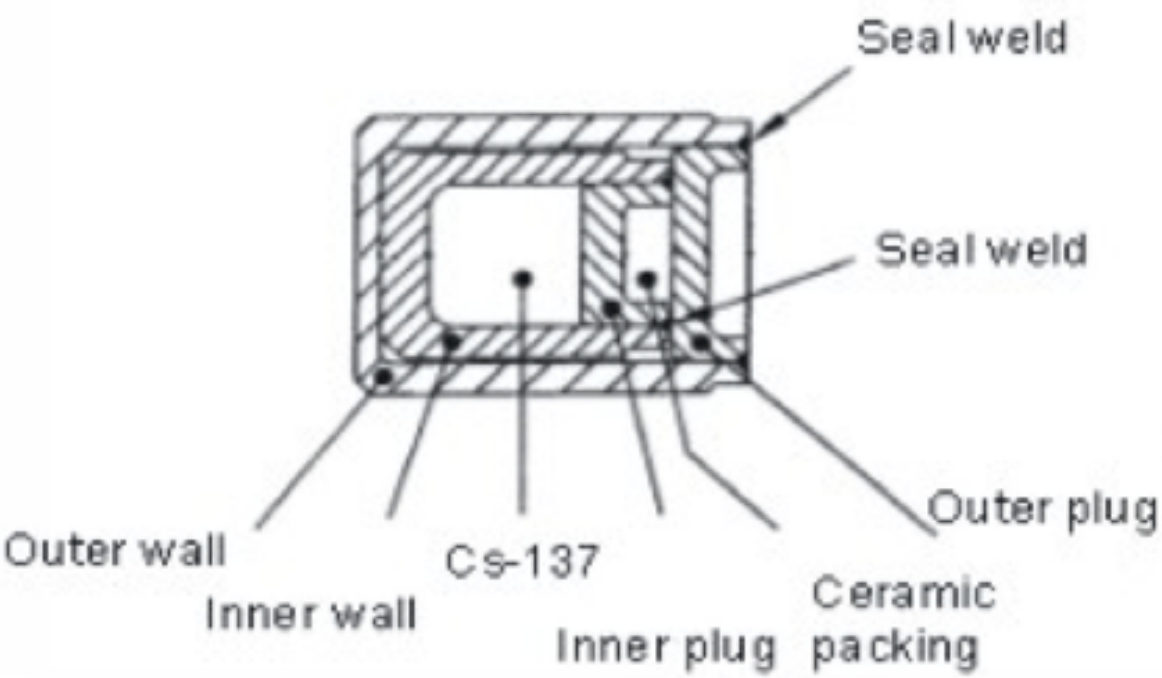

Source Cutaway Drawing: Americium-241

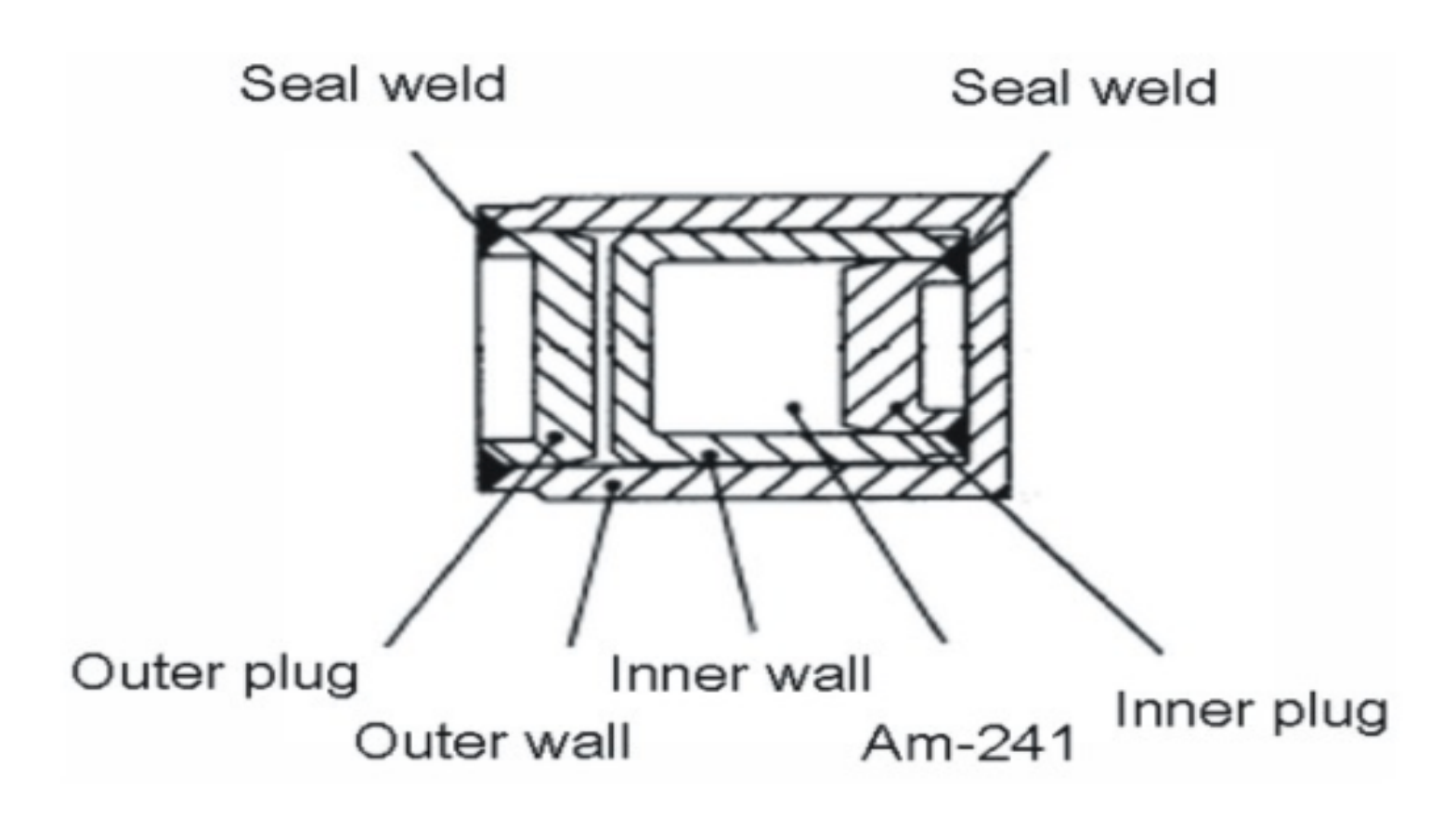

Am-241 source