EPA-454/B-95-004

SCREEN3 Model User's Guide

U.S. ENVIRONMENTAL PROTECTION AGENCY
Office of Air Quality Planning and Standards
Emissions, Monitoring, and Analysis Division
Research Triangle Park, North Carolina 27711

September 1995

DISCLAIMER

The information in this document has been reviewed in its entirety by the U.S. Environmental Protection Agency (EPA), and approved for publication as an EPA document. Any mention of trade names, products, or services does not convey, and should not be interpreted as conveying official EPA approval, endorsement, or recommendation.

PREFACE

The SCREEN3 Model User's Guide is an update to Appendix A of "Screening Procedures for Estimating the Air Quality Impact of Stationary Sources" (EPA, 1988), which was later revised and published as a separate document (EPA, 1995a). The SCREEN3 model includes several modifications and enhancements to the original SCREEN model, including updates to the code to ensure consistency with the dispersion algorithms in the Industrial Source Complex (ISC3) model (EPA, 1995b). Also, three new non-regulatory options were added to the code.

Although attempts are made to thoroughly check computer programs with a wide variety of input data, errors are occasionally found. Any suspected errors and technical questions regarding the use of the SCREEN3 model should be directed to Chief, Air Quality Modeling Group, OAQPS/EMAD, MD-14, Research Triangle Park, NC 27711. Copies of the SCREEN3 model may be obtained from the National Technical Information Service (NTIS), U.S. Department of Commerce, 5285 Port Royal Road, Springfield, VA 22161, telephone (703) 487-4650, or may be downloaded from the Support Center for Regulatory Air Models (SCRAM) Bulletin Board System (BBS). The SCRAM BBS may be accessed at (919) 541-5742. Questions related to connecting to SCRAM should be directed to the TTN Helpline at (919) 541-5384.

ACKNOWLEDGEMENTS

This report has been funded by the United States Environmental Protection Agency (EPA) under contract 68D00124 to Pacific Environmental Services, Inc. (PES).

Mr. Roger W. Brode, Pacific Environmental Services, Inc. (PES), is the principal contributor to the SCREEN3 Model User's Guide. In addition, this document was reviewed and commented upon by Mr. Dennis G. Atkinson (EPA, OAQPS), Mr. James L. Dicke (EPA, OAQPS), and Mr. John S. Irwin (EPA, OAQPS). Revisions to the original SCREEN3 User's Guide were reviewed and commented upon by Dennis G. Atkinson (EPA, OAQPS), the SCREEN3 Work Assignment Manager and Mr. Peter A. Eckhoff (EPA, OAQPS).

CONTENTS

PREFACE iii

ACKNOWLEDGEMENTS iv

FIGURES vi

TABLES vii

1. INTRODUCTION 1
   1.1 Overview of User's Guide 1
   1.2 Purpose of SCREEN 1
   1.3 What is needed in order to use SCREEN? 1
   1.4 What will SCREEN do? 2
   1.5 What will SCREEN not do? 2
   1.6 How will SCREEN results compare to hand calculations from the document? 3
   1.7 How does SCREEN differ from PTPLU, PTMAX and PTDIS? 4
   1.8 What changes have been incorporated into SCREEN? . . 4
   1.9 What constitutes regulatory default in SCREEN? 5

2. TUTORIAL 7
   2.1 What is needed? 7
   2.2 Setup on the PC 7
   2.3 Executing the Model 7
   2.4 Point Source Example 8
   2.5 Flare Release Example 15
   2.6 Area Source Example 16
   2.7 Volume Source Example 17
   2.8 Non-Regulatory Options 18

3. TECHNICAL DESCRIPTION 35
   3.1 Basic Concepts of Dispersion Modeling 35
   3.2 Worst Case Meteorological Conditions 36
   3.3 Plume Rise for Point Sources 38
   3.4 Dispersion Parameters 39
   3.5 Buoyancy Induced Dispersion 39
   3.6 Building Downwash 39
   3.7 Fumigation 41
   3.8 Complex Terrain 24-hour Screen 44

4. NOTE TO PROGRAMMERS 49

5. REFERENCES 51

FIGURES

Figure		Page
1.	Point Source Options in SCREEN	19
2.	SCREEN Point Source Example for Complex Terrain	20
3.	SCREEN Point Source Example with Building Downwash	21
4.	Flow Chart of Inputs and Outputs for SCREEN Point Source	24
5.	SCREEN Flare Release Example	26
6.	Flow Chart of Inputs and Outputs for SCREEN Flare Release	28
7.	SCREEN Area Source Example	30
8.	Flow Chart of Inputs and Outputs for SCREEN Area Source	32
9.	SCREEN Volume Source Example	33
10.	Flow Chart of Inputs and Outputs for SCREEN Volume Source	34

TABLES

Table | Page

1. Summary of Suggested Procedures for Estimating Initial Lateral Dimensions (σ_{yo}) and Initial Vertical Dimensions (σ_{zo}) for Volume Sources 18

2. Wind Speed and Stability Class Combinations Used by the SCREEN Model 37

1. INTRODUCTION

1.1 Overview of User's Guide

It will be easier to understand this user's guide and the SCREEN model if you are already familiar with the "Screening Procedures for Estimating the Air Quality Impact of Stationary Sources" (EPA, 1995a).

This introduction should answer most of your general questions about what the SCREEN model can (and cannot) do, and explain its relationship to the Screening Procedures Document (SPD) above.

Section 2 provides several examples of how to run the SCREEN model and will also help the novice user get started. The point source example provides the most detailed description and should be read before the other examples. If you are already familiar with personal computers and with the screening procedures, you probably will not have much trouble simply running SCREEN and "experimenting" with it. It runs interactively, and the prompts should be self explanatory.

Section 3 provides background technical information as a reference for those who want to know more about how SCREEN makes certain calculations. The discussion in Section 3 is intended to be as brief as possible, with reference to other documents for more detailed descriptions.

1.2 Purpose of SCREEN

The SCREEN model was developed to provide an easy-to-use method of obtaining pollutant concentration estimates based on the screening procedures document. By taking advantage of the rapid growth in the availability and use of personal computers (PCs), the SCREEN model makes screening calculations accessible to a wide range of users.

1.3 What is needed in order to use SCREEN?

SCREEN will run on an IBM-PC compatible personal computer with at least 256K of RAM. You will need at least one 5 1/4 inch double-sided, double-density (360K) or a 5 1/4 inch high density (1.2MB) disk drive. The program will run with or without a math coprocessor chip. Execution time will be greatly enhanced with a math coprocessor chip present (about a factor of 5 in computer time) and will also benefit from the use of a hard disk drive. SCREEN will write a date and time to the output file, provided that a real time clock is available.

1.4 What will SCREEN do?

SCREEN runs interactively on the PC, meaning that the program asks the user a series of questions in order to obtain the necessary input data, and to determine which options to exercise. SCREEN can perform all of the single source, short-term calculations in the screening procedures document, including estimating maximum ground-level concentrations and the distance to the maximum (Step 4 of Section 4.2, SPD), incorporating the effects of building downwash on the maximum concentrations for both the near wake and far wake regions (Section 4.5.1), estimating concentrations in the cavity recirculation zone (Section 4.5.1), estimating concentrations due to inversion break-up and shoreline fumigation (Section 4.5.3), and determining plume rise for flare releases (Step 1 of Section 4.2). The model can incorporate the effects of simple elevated terrain on maximum concentrations (Section 4.2), and can also estimate 24-hour average concentrations due to plume impaction in complex terrain using the VALLEY model 24-hour screening procedure (Section 4.5.2). Simple area sources can be modeled with SCREEN using a numerical integration approach. The SCREEN model can also be used to model the effects of simple volume sources using a virtual point source procedure. The area and volume source algorithms are described in Volume II of the ISC model user's guide (EPA, 1995b). The SCREEN model can also calculate the maximum concentration at any number of user-specified distances in flat or elevated simple terrain (Section 4.3), including distances out to 100km for long-range transport (Section 4.5.6).

1.5 What will SCREEN not do?

SCREEN can not explicitly determine maximum impacts from multiple sources, except for the procedure to handle multiple nearby stacks by merging emissions into a single "representative" stack (Section 2.2). The user is directed to the MPTER (Pierce and Turner, 1980) or ISC (EPA, 1995b) models on EPA's Support Center for Regulatory Air Models (SCRAM) Bulletin Board System (BBS) to model short-term impacts for multiple sources. With the exception of the 24-hour estimate for complex terrain impacts, the results from SCREEN are estimated maximum 1-hour concentrations. To handle longer period averages, the screening procedures document contains recommended adjustment factors to estimate concentrations out to 24 hours from the maximum 1-hour value (Section 4.2, Step 5). For seasonal or annual averages, Section 4.4 of the screening procedures document contains a procedure using hand calculations, but the use of ISCLT (EPA, 1995b) or another long-term model on the SCRAM BBS is recommended.

1.6 How will SCREEN results compare to hand calculations from the document?

The SCREEN model is based on the same modeling assumptions that are incorporated into the screening procedures and nomographs, and for many sources the results will be very comparable, with estimated maximum concentrations differing by less than about 5 percent across a range of source characteristics. However, there are a few differences of which the user should be aware. For some sources, particularly taller sources with greater buoyancy, the differences in estimated concentrations will be larger, with the hand calculation exceeding the SCREEN model result by as much as 25 percent. These differences are described in more detail below.

The SCREEN model can provide estimated concentrations for distances less than 100 meters (down to one meter as in other regulatory models), whereas the nomographs used in the hand calculations are limited to distances greater than or equal to 100 meters. The SCREEN model is also not limited to plume heights of 300 meters, whereas the nomographs are. In both cases, caution should be used in interpreting results that are outside the range of the nomographs.

In addition, SCREEN examines a full range of meteorological conditions, including all stability classes and wind speeds (see Section 3) to find maximum impacts, whereas to keep the hand calculations tractable only a subset of meteorological conditions (stability classes A, C, and E or F) likely to contribute to the maximum concentration are examined. The use of a full set of meteorological conditions is required in SCREEN because maximum concentrations are also given as a function of distance, and because A, C, and E or F stability may not be controlling for sources with building downwash (not included in the hand calculations). SCREEN explicitly calculates the effects of multiple reflections of the plume off the elevated inversion and off the ground when calculating concentrations under limited mixing conditions. To account for these reflections, the hand calculation screening procedure (Procedure (a) of Step 4 in Section 4.2, SPD) increases the calculated maximum concentrations for A stability by a factor ranging from 1.0 to 2.0. The factor is intended to be a conservative estimate of the increase due to limited mixing, and may be slightly higher (about 5 to 10 percent) than the increase obtained from SCREEN using the multiple reflections, depending on the source. Also, SCREEN handles the near neutral/high wind speed case [Procedure (b)] by examining a range of wind speeds for stability class C and selecting the maximum. In contrast, the hand calculations are based on the maximum concentration estimated using stability class C with a calculated critical wind speed and a 10 meter wind speed of 10 m/s. This difference should result in differences in maximum concentrations of less than about 5 percent for those

sources where the near neutral/high wind speed case is controlling.

The SCREEN model results also include the effects of buoyancy-induced dispersion (BID), which are not accounted for by the hand calculations (except for fumigation). The inclusion of BID in SCREEN may either increase or decrease the estimated concentrations, depending on the source and distance. For sources with plume heights below the 300 meter limit of the hand calculations, the effect of BID on estimated maximum concentrations will usually be less than about ± 10 percent. For elevated sources with relatively large buoyancy, the inclusion of BID may be expected to decrease the estimated maximum concentration by as much as 25 percent.

1.7 How does SCREEN differ from PTPLU, PTMAX and PTDIS?

The PT-series of models have been used in the past to obtain results for certain screening procedures in Volume 10R (EPA, 1977). The SCREEN model is designed specifically as a computerized implementation of the revised screening procedures, and is much more complete than the earlier models, as described above. The SCREEN model also requires less manual "postprocessing" than the earlier models by listing the maximum concentrations in the output. However, many of the algorithms in SCREEN are the same as those contained in PTPLU-2.0 (Pierce, 1986). For the same source parameters and for given meteorological conditions, the two models will give comparable results. SCREEN also incorporates the option to estimate concentrations at discrete user-specified distances, which was available with PTDIS, but is not included in PTPLU.

1.8 What changes have been incorporated into SCREEN?

The SCREEN3 model (dated 95250) includes one major revision to the previous version of SCREEN (dated 92245). The finite line segment algorithm for modeling area sources has been replaced with a numerical integration algorithm based on the ISCST (EPA, 1995b) model. The new algorithm allows the user to model rectangular area sources with aspect ratios (length/width) of up to 10:1. The new algorithm also provides estimates of concentration within the area source itself and also includes three non-regulatory options.

Three new non-regulatory optional features have been added to this model. The first feature is the inclusion of an alternative mixing height algorithm (Brode, 1991). The alternative mixing height is determined by using the maximum of a predetermined mixing height or a value adjusted slightly higher than the plume height, whichever is greater. Both the mixing height and adjustment values to the plume height are based on stability class. Selection of this algorithm results in

concentrations that are generally more conservative than output from the ISCST3 model.

The second feature allows the optional input of an anemometer height in place of the default height of 10 meters. This affects the stack top wind speeds for Choice of Meteorology selections 1 and 2. For Choice of Meteorology selection 3, the user is prompted to entered a 10 meter wind speed which is unaffected by any optionally entered anemometer height.

The third feature is the inclusion of an alternative building cavity algorithm (Schulman and Scire, 1993). The published concentration results using this algorithm model the sampled wind tunnel test concentrations better than the regulatory algorithm for the range selected.

The options are activated by adding flags and a value to the line in the input file containing the source type input.

1.9 What constitutes the regulatory default in SCREEN?

Regulatory default consists of: 1) entering the appropriate input source characteristics, 2) selecting the appropriate regulatory options (see Figure 1), and 3) then using the recommended SCREEN defaults. Discussion of the SCREEN inputs, regulatory options, and defaults can be found in Section 2 of this document and throughout Section 4 of the Screening Procedures document (See References). Regulatory default does not include the use of any of the three new non-regulatory options mentioned in Section 1.8.

2. TUTORIAL

2.1 What is needed?

- IBM-PC compatible with at least 256K bytes of RAM, and a 5 1/4 inch double-sided, double-density or high density disk drive.
- Diskette provided with SCREEN software (or files downloaded from the SCRAM BBS).
- Hard or floppy disk drive (minimum of 1 MB memory available).
- Math coprocessor chip (optional but recommended).
- Blank diskette for use in making a backup copy of software.

2.2 Setup on the PC

Using the DISKCOPY command of DOS (Disk Operating System) or similar routine, make a backup copy of the SCREEN software. Store the original SCREEN software diskette in a safe location. The DISKCOPY command will also format the blank disk if needed.

The following set-up instructions assume that the user has a system with a hard disk drive and the "pkunzip" decompression program resident on the hard disk drive. The "pkunzip" program can be obtained via the Support Center for Regulatory Air Models (SCRAM) Bulletin Board System (BBS) by accessing the archivers/dearchivers option under system utilities on the top menu.

Insert the SCREEN diskette in floppy drive A: and enter the following command at the DOS prompt from drive C: (either from the root directory or a subdirectory):

```
PKUNZIP A:SCREEN3
```

This command will decompress the six files from the SCREEN diskette and place them on the hard disk. The hard disk will now contain the executable file of SCREEN, called SCREEN3.EXE, as well as the FORTRAN source files, SCREEN3.FOR and MAIN.INC, an example input file, EXAMPLE.DAT, an associated output file EXAMPLE.OUT, and this document, the SCREEN3 Model User's Guide (in WordPerfect 5.1 format), SCREEN3.WPF.

2.3 Executing the Model

The SCREEN model is written as an interactive program for the PC, as described earlier. Therefore, SCREEN is normally executed by simply typing SCREEN from any drive and directory

that contains the SCREEN3.EXE file, and responding to the prompts provided by the program. However, a mechanism has been provided to accommodate the fact that for some applications of SCREEN the user might want to perform several runs for the same source changing only one or a few input parameters. This mechanism takes advantage of the fact that the Disk Operating System (DOS) on PCs allows for the redirection of input that is normally provided via the keyboard to be read from a file instead. As an example, to run the sample problem provided on the disk one would type:

```
SCREEN3 <EXAMPLE.DAT
```

at the DOS prompt. The SCREEN model will then read the responses to its prompts from the EXAMPLE.DAT file rather than from the keyboard. The output from this run will be stored in a file called SCREEN.OUT, which can then be compared with the EXAMPLE.OUT file provided on the program disk. The file containing the redirected input data may be given any valid DOS pathname. To facilitate the creation of the input file for the SCREEN model, SCREEN has been programmed to write out all inputs provided to a file called SCREEN.DAT during execution. Therefore, at the completion of a run, if the user types

```
SCREEN3 <SCREEN.DAT
```

the last run will be duplicated exactly. Alternatively, the SCREEN.DAT file may be edited as an ASCII file using a text or line editor, and selected input parameters changed before rerunning the model. Since the original SCREEN.DAT file will be overwritten each time the model is run, it is advisable to save the modified inputs under a different file name.

Some cautions are needed regarding the use of redirected input with SCREEN. Because of the way some input errors are handled by SCREEN, the SCREEN.DAT file may contain some of the errors from the original input. While SCREEN.DAT should still reproduce the correct results, it will be easier to work with the file if the original input does not contain any errors. More importantly, since the inputs requested by SCREEN depend on the options selected, it is not advisable to edit the SCREEN.DAT file and try to change the options selected. An experienced user may be able to do this, especially with the help of the input flow charts provided later in this section, but it may be easier simply to rerun SCREEN with the new options.

2.4 Point Source Example

When running SCREEN for a point source, or for flare releases and area sources discussed below, the user is first asked to provide a one line title (up to 79 characters) that will appear on the output file. The user will then be asked to

identify the source type, and should enter 'P' or 'p' for a point source (the model will identify either upper or lower case letters and will repeat the prompt until a valid response is given).

For a point source, the user will be asked to provide the following inputs:

Point Source Inputs

Emission rate (g/s)
Stack height (m)
Stack inside diameter (m)
Stack gas exit velocity (m/s) or flow rate (ft^3/min or m^3/s)
Stack gas temperature (K)
Ambient temperature (K) (use default of 293K if not known)
Receptor height above ground (may be used to define flagpole receptors) (m)
Urban/rural option (U = urban, R = rural)

The SCREEN model uses free format to read the numerical input data, with the exception of the exit velocity/flow rate option. The default choice for this input is stack gas exit velocity, which SCREEN will read as free format. However, if the user precedes the input with the characters VF= in columns 1-3, then SCREEN will interpret the input as flow rate in actual cubic feet per minute (ACFM). Alternatively, if the user inputs the characters VM= in columns 1-3, then SCREEN will interpret the input as flow rate in m^3/s. The user can input either upper or lower case characters for VF and VM. The flow rate values are then converted to exit velocity in m/s for use in the plume rise equations, based on the diameter of the stack.

SCREEN allows for the selection of urban or rural dispersion coefficients. The urban dispersion option is selected by entering a 'U' (lower or upper case) in column 1, while the rural dispersion option is selected by entering an 'R' (upper or lower case) in column 1. For compatibility with the previous version of the model, SCREEN also allows for an input of '1' to select the urban option, or a '2' to select the rural option. Determination of the applicability of urban or rural dispersion is based upon land use or population density. In general, if 50 percent or more of an area 3 km around the source satisfies the urban criteria (Auer, 1978), the site is deemed in an urban setting. Of the two methods, the land use procedure is considered more definitive. For more detailed guidance on land use classification for urban and rural, refer to Section 8.2.8 of Appendix W to 40 CFR Part 51 (*Guideline on Air Quality Models*).

Figure 1 presents the order of regulatory options within the

SCREEN model for point sources and is annotated with the corresponding sections from the screening procedures document. In order to obtain results from SCREEN corresponding to the procedures in Step 4 of Section 4.2, the user should select the full meteorology option, the automated distance array option, and, if applicable for the source, the simple elevated terrain option. The simple elevated terrain option would be used if the terrain rises above the stack base elevation but is less than the height of the physical stack. These, as well as the other options in Figure 1, are explained in more detail below. A flagpole receptor is defined as any receptor which is located above local ground level, e.g., to represent the roof or balcony of a building.

2.4.1 Building Downwash Option

There are two downwash options available with this model, a regulatory and a non-regulatory option. Both are discussed below.

2.4.1.1 Regulatory Building Downwash Option

Following the basic input of source characteristics, a SCREEN prompt asks if building downwash is to be considered, and if so, prompts for building height, minimum horizontal dimension, and maximum horizontal dimension, in meters, are presented. The downwash screening procedure assumes that the building can be approximated by a simple rectangular box. Wake effects are included in any calculations made using the automated distance array or discrete distance options (described below). Cavity calculations are made for two building orientations - first with the minimum horizontal building dimension alongwind, and second with the maximum horizontal dimension alongwind. The cavity calculations are summarized at the end of the distance-dependent calculations. Refer to Section 3.6 for more details on the building downwash cavity and wake screening procedure.

2.4.1.2 Non-Regulatory Building Downwash Option

A Schulman-Scire Building Downwash/Cavity option can be selected along with two other non-regulatory options by entering the appropriate flag, SS, on the line containing the source type input. The program will later ask for the building height, minimum horizontal dimension, and maximum horizontal dimension in meters as is done for the regulatory cavity option. However, for this option only, the program will ask for the position of the source on the building with respect to the two building orientations mentioned in 2.4.1.1. The response will need to be in the form of a ratio of the stack distance from a building centerline drawn perpendicular to the wind over the horizontal dimension of the side of the building which is parallel to the wind. The program will show a figure on how to calculate the

correct ratio for a particular orientation.

2.4.2 Complex Terrain Option

The complex terrain option of SCREEN allows the user to estimate impacts for cases where terrain elevations exceed stack height. If the user elects this option, then SCREEN will calculate and print out a final stable plume height and distance to final rise for the VALLEY model 24-hour screening technique. This technique assumes stability class F (E for urban) and a stack height wind speed of 2.5 m/s. For complex terrain, maximum impacts are expected to occur for plume impaction on the elevated terrain under stable conditions. The user is therefore instructed to enter minimum distances and terrain heights for which impaction is likely, given the plume height calculated, and taking into account complex terrain closer than the distance to final rise. If the plume is at or below the terrain height for the distance entered, then SCREEN will make a 24-hour concentration estimate using the VALLEY screening technique. If the terrain is above stack height but below plume centerline height for the distance entered, then SCREEN will make a VALLEY 24-hour estimate (assuming E or F and 2.5 m/s), and also estimate the maximum concentration across a full range of meteorological conditions using simple terrain procedures with terrain "chopped off" at physical stack height. The higher of the two estimates is selected as controlling for that distance and terrain height (both estimates are printed out for comparison). The simple terrain estimate is adjusted to represent a 24-hour average by multiplying by a factor of 0.4, while the VALLEY 24-hour estimate incorporates the 0.25 factor used in the VALLEY model. Calculations continue for each terrain height/distance combination entered until a terrain height of zero is entered. The user will then have the option to continue with simple terrain calculations or to exit the program. It should be noted that SCREEN will not consider building downwash effects in either the VALLEY or the simple terrain component of the complex terrain screening procedure, even if the building downwash option is selected. SCREEN also uses a receptor height above ground of 0.0m (i.e. no flagpole receptors) in the complex terrain option even if a non-zero value is entered. The original receptor height is saved for later calculations. Refer to Section 3 for more details on the complex terrain screening procedure.

2.4.3 Simple Elevated or Flat Terrain Option

The user is given the option in SCREEN of modeling either simple elevated terrain, where terrain heights exceed stack base but are below stack height, or simple flat terrain, where terrain heights are assumed not to exceed stack base elevation. If the user elects not to use the option for simple terrain screening with terrain above stack base, then flat terrain is assumed and

the terrain height is assigned a value of zero. If the simple elevated terrain option is used, SCREEN will prompt the user to enter a terrain height above stack base. If terrain heights above physical stack height are entered by the user for this option, they are chopped off at the physical stack height.

The simple elevated terrain screening procedure assumes that the plume elevation above sea level is not affected by the elevated terrain. Concentration estimates are made by reducing the calculated plume height by the user-supplied terrain height above stack base. Neither the plume height nor terrain height are allowed to go below zero. The user can model simple elevated terrain using either or both of the distance options described below, i.e., the automated distance array or the discrete distance option. When the simple elevated terrain calculations for each distance option are completed, the user will have the option of continuing simple terrain calculations for that option with a new terrain height. (For flat terrain the user will not be given the option to continue with a new terrain height). For conservatism and to discourage the user from modeling terrain heights that decrease with distance, the new terrain height for the automated distances cannot be lower than the previous height for that run. The user is still given considerable flexibility to model the effects of elevated terrain below stack height across a wide range of situations.

For relatively uniform elevated terrain, or as a "first cut" conservative estimate of terrain effects, the user should input the maximum terrain elevation (above stack base) within 50 km of the source, and exercise the automated distance array option out to 50 km. For isolated terrain features a separate calculation can be made using the discrete distance option for the distance to the terrain feature, with the terrain height input as the maximum height of the feature above stack base. Where terrain heights vary with distance from the source, then the SCREEN model can be run on each of several concentric rings using the minimum and maximum distance inputs of the automated distance option to define each ring, and using the maximum terrain elevation above stack base within each ring for terrain height input. As noted above, the terrain heights are not allowed to decrease with distance in SCREEN. If terrain decreasing with distance (in all directions) can be justified for a particular source, then the distance rings would have to be modeled using separate SCREEN runs, and the results combined. The overall maximum concentration would then be the controlling value. The optimum ring sizes will depend on how the terrain heights vary with distance, but as a "first cut" it is suggested that ring sizes of about 5 km be used (i.e., 0-5km, 5-10km, etc.). The application of SCREEN to evaluating the effects of elevated terrain should be done in consultation with the permitting agency.

2.4.4 Choice of Meteorology

For simple elevated or flat terrain screening, the user will be given the option of selecting from three choices of meteorology: (1) full meteorology (all stability classes and wind speeds); (2) specifying a single stability class; or (3) specifying a single stability class and wind speed. Generally, the full meteorology option should be selected. The other two options were originally included for testing purposes only, but may be useful when particular meteorological conditions are of concern. Refer to Section 3 for more details on the determination of worst case meteorological conditions by SCREEN.

2.4.5 Automated Distance Array Option

The automated distance array option of SCREEN gives the user the option of using a pre-selected array of 50 distances ranging from 100m out to 50 km. Increments of 100m are used out to 3,000m, with 500m increments from 3,000m to 10 km, 5 km increments from 10 km to 30 km, and 10 km increments out to 50 km. When using the automated distance array, SCREEN prompts the user for a minimum and maximum distance to use, which should be input in free format, i.e., separated by a comma or a space. SCREEN then calculates the maximum concentration across a range of meteorological conditions for the minimum distance given (≥ 1 meter), and then for each distance in the array larger than the minimum and less than or equal to the maximum. Thus, the user can input the minimum site boundary distance as the minimum distance for calculation and obtain a concentration estimate at the site boundary and beyond, while ignoring distances less than the site boundary.

If the automated distance array is used, then the SCREEN model will use an iteration routine to determine the maximum value and associated distance to the nearest meter. If the minimum and maximum distances entered do not encompass the true maximum concentration, then the maximum value calculated by SCREEN may not be the true maximum. Therefore, it is recommended that the maximum distance be set sufficiently large initially to ensure that the maximum concentration is found. This distance will depend on the source, and some "trial and error" may be necessary, however, the user can input a distance of 50,000m to examine the entire array. The iteration routine stops after 50 iterations and prints out a message if the maximum is not found. Also, since there may be several local maxima in the concentration distribution associated with different wind speeds, it is possible that SCREEN will not identify the overall maximum in its iteration. This is not likely to be a frequent occurrence, but will be more likely for stability classes C and D due to the larger number of wind speeds examined.

2.4.6 Discrete Distance Option

The discrete distance option of SCREEN allows the user to

input specific distances. Any number of distances (≥ 1 meter) can be input by the user and the maximum concentration for each distance will be calculated. The user will always be given this option whether or not the automated distance array option is used. The option is terminated by entering a distance of zero (0). SCREEN will accept distances out to 100 km for long-range transport estimates with the discrete distance option. However, for distances greater than 50 km, SCREEN sets the minimum 10 meter wind speed at 2 m/s to avoid unrealistic transport times.

2.4.7 Fumigation Option

Once the distance-dependent calculations are completed, SCREEN will give the user the option of estimating maximum concentrations and distance to the maximum associated with inversion break-up fumigation, and shoreline fumigation. The option for fumigation calculations is applicable only for rural inland sites with stack heights greater than or equal to 10 meters (within 3,000m onshore from a large body of water.) The fumigation algorithm also ignores any potential effects of elevated terrain.

Once all calculations are completed, SCREEN summarizes the maximum concentrations for each of the calculation procedures considered. Before execution is stopped, whether it is after complex terrain calculations are completed or at the end of the simple terrain calculations, the user is given the option of printing a hardcopy of the results. Whether or not a hardcopy is printed, the results of the session, including all input data and concentration estimates, are stored in a file called SCREEN.OUT. This file is opened by the model each time it is run. If a file named SCREEN.OUT already exists, then its contents will be overwritten and lost. Thus, if you wish to save results of a particular run, then change the name of the output file using the DOS RENAME command, e.g., type 'REN SCREEN.OUT SAMPLE1.OUT', or print the file using the option at the end of the program. If SCREEN.OUT is later printed using the DOS PRINT command, the FORTRAN carriage controls will not be observed. (Instructions are included in Section 4 for simple modifications to the SCREEN code that allow the user to specify an output filename for each run.)

Figure 2 shows an example using the complex terrain screen only. Figure 3 shows an example for an urban point source which uses the building downwash option. In the DWASH column of the output, 'NO' indicates that no downwash is included, 'HS' means that Huber-Snyder downwash is included, 'SS' means that Schulman-Scire downwash is included, and 'NA' means that downwash is not applicable since the downwind distance is less than $3L_b$. A blank in the DWASH column means that no calculation was made for that distance because the concentration was so small.

Figure 4 presents a flow chart of all the inputs and various options of SCREEN for point sources. Also illustrated are all of the outputs from SCREEN. If a cell on the flow chart does not contain the words "Enter" or "Print out", then it is an internal test or process of the program, and is included to show the flow of the program.

2.5 Flare Release Example

By answering 'F' or 'f' to the question on source type the user selects the flare release option. This option is similar to the point source described above except for the inputs needed to calculate plume rise. The inputs for flare releases are as follows:

Flare Release Inputs

Emission rate (g/s)
Flare stack height (m)
Total heat release rate (cal/s)
Receptor height above ground (m)
Urban/rural option (U = urban, R = rural)

The SCREEN model calculates plume rise for flares based on an effective buoyancy flux parameter. An ambient temperature of 293K is assumed in this calculation and therefore none is input by the user. It is assumed that 55 percent of the total heat is lost due to radiation. Plume rise is calculated from the top of the flame, assuming that the flame is bent 45 degrees from the vertical. SCREEN calculates and prints out the effective release height for the flare. SCREEN provides the same options for flares as described earlier for point sources, including building downwash, complex and/or simple terrain, fumigation, and the automated and/or discrete distances. The order of these options and the user prompts are the same as described for the point source example.

While building downwash is included as an option for flare releases, it should be noted that SCREEN assumes an effective stack gas exit velocity (v_s) of 20 m/s and an effective stack gas exit temperature (T_s) of 1,273K, and calculates an effective stack diameter based on the heat release rate. These effective stack parameters are somewhat arbitrary, but the resulting buoyancy flux estimate is expected to give reasonable final plume rise estimates for flares. However, since building downwash estimates depend on transitional momentum plume rise and transitional buoyant plume rise calculations, the selection of effective stack parameters could influence the estimates. Therefore, building downwash estimates should be used with extra caution for flare releases. If more realistic stack parameters can be determined, then the estimate could alternatively be made

with the point source option of SCREEN. In doing so, care should be taken to account for the vertical height of the flame in specifying the release height (see Section 3). Figure 5 shows an example for a flare release, and Figure 6 shows a flow chart of the flare release inputs, options, and output.

2.6 Area Source Example

The third source type option in SCREEN is for area sources, which is selected by entering 'A' or 'a' for source type. The area source algorithm in SCREEN is based on a numerical integration approach, and allows for the area source to be approximated by a rectangular area. The inputs requested for area sources are as follows:

Area Source Inputs

Emission rate [g/(s-m^2)]
Source release height (m)
Length of larger side of the rectangular area (m)
Length of smaller side of the rectangular area (m)
Receptor height above ground (m)
Urban/rural option (U = urban, R = rural)
Wind direction search option (if no, specify desired angle)

Note that the emission rate for area sources is input as an emission rate per unit area in units of g/(s-m^2). These units are consistent with the ISCST model.

Since the concentration at a particular distance downwind from a rectangular area is dependent on the orientation of the area relative to the wind direction, the SCREEN model provides the user with two options for treating wind direction. The first option, which should be used for most applications of SCREEN and is the regulatory default, is for the model to search through a range of wind directions to find the maximum concentration. The range of directions used in the search is determined from a set of look-up tables based on the aspect ratio of the area source, the stability category, and the downwind distance. The SCREEN model also provides the user an option to specify a wind direction orientation relative to the long axis of the rectangular area. The second option may be used to estimate the concentration at a particular receptor location relative to the area. The output table for area sources includes the wind direction associated with the maximum concentration at each distance.

The user has the same options for handling distances and the same choices of meteorology as described above for point sources,

but no complex terrain, elevated simple terrain, building downwash, or fumigation calculations are made for area sources. Distances are measured from the center of the rectangular area. Since the numerical integration algorithm can estimate concentrations within the area source, the user can enter any value for the minimum distance. Figure 7 shows an example of SCREEN for an area source, using both the automated and discrete distance options. Figure 8 provides a flow chart of inputs, options, and outputs for area sources.

2.7 Volume Source Example

The fourth source type option in SCREEN is for volume sources, which is selected by entering 'V' or 'v' for source type. The volume source algorithm is based on a virtual point source approach, and may be used for non-buoyant sources whose emissions occupy some initial volume. The inputs requested for volume sources are as follows:

Volume Source Inputs

Emission rate (g/s)
Source release height (m)
Initial lateral dimension of volume (m)
Initial vertical dimension of volume (m)
Receptor height above ground (m)
Urban/rural option (U = urban, R = rural)

The user must determine the initial dimensions of the volume source plume before exercising the SCREEN model volume source. Table 1 provides guidance on determining these inputs. Since the volume source algorithm cannot estimate concentrations within the volume source, the model will give a concentration of zero for distances (measured from the center of the volume) of less than 2.15 σ_{yo}. Figure 9 shows an example of SCREEN for a volume source, and Figure 10 provides a flow chart of inputs, options, and outputs for volume sources.

TABLE 1.
SUMMARY OF SUGGESTED PROCEDURES FOR ESTIMATING
INITIAL LATERAL DIMENSIONS (σ_{yo}) AND
INITIAL VERTICAL DIMENSIONS (σ_{zo}) FOR VOLUME SOURCES

Description of Source	Initial Dimension
(a) Initial Lateral Dimensions (σ_{yo})	
Single Volume Source	σ_{yo} = length of side divided by 4.3
(b) Initial Vertical Dimensions (σ_{zo})	
Surface-Based Source ($h_e \sim 0$)	σ_{zo} = vertical dimension of source divided by 2.15
Elevated Source ($h_e > 0$) on or Adjacent to a Building	σ_{zo} = building height divided by 2.15
Elevated Source ($h_e > 0$) not on or Adjacent to a Building	σ_{zo} = vertical dimension of source divided by 4.3

2.8 Non-regulatory Options

On the same source type input line, the program allows the input of three additional input, N, nn.n, and SS. Where 'nn.n' represents a numerical anemometer height such as 7.5 meters. These input, when entered, cause the program to use the non-regulatory Brode 2 Mixing Height (1991) option (N), a user-specified anemometer height (nn.n), and/or a non-regulatory building downwash/cavity option (Schulman and Scire, 1993)(SS, in SCREEN printout). While additional input is required for the Schulman-Scire Building Downwash/Cavity option, as was discussed in Section 2.4.1.2, no additional input data are required for the other two options.

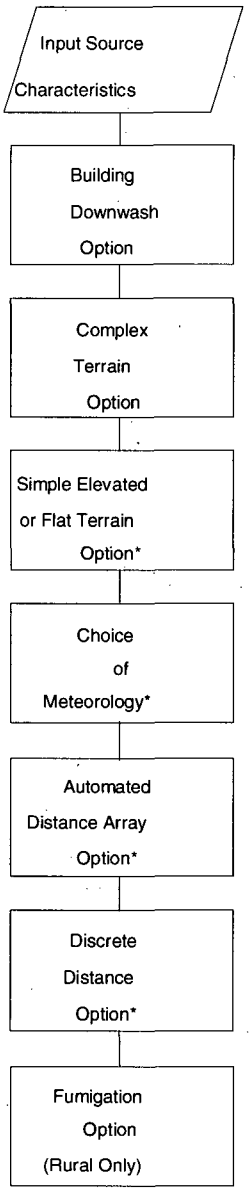

Order of Options in SCREEN	Corresponding Section in Screening Procedures Document	
Building Downwash Option	Section 4.5.1	
Complex Terrain Option	Section 4.5.2	
Simple Elevated or Flat Terrain Option*	Section 4.2	
Choice of Meteorology*	Section 4.2, Step 4	
Automated Distance Array Option*	Section 4.2, Step 4	
Discrete Distance Option*	Section 4.3	for Distances < 50km
	Section 4.5.6	for Distances > 50km
Fumigation Option (Rural Only)	Section 4.5.3	

*These options also apply to Area Sources, Section 4.5.4

Figure 1. Point Source Options in SCREEN

09/07/95
12:00:00

*** SCREEN3 MODEL RUN ***
*** VERSION DATED 95250 ***

POINT SOURCE EXAMPLE WITH COMPLEX TERRAIN

COMPLEX TERRAIN INPUTS:
SOURCE TYPE = POINT
EMISSION RATE (G/S) = 100.000
STACK HT (M) = 100.0000
STACK DIAMETER (M) = 2.5000
STACK VELOCITY (M/S) = 25.0000
STACK GAS TEMP (K) = 450.0000
AMBIENT AIR TEMP (K) = 293.0000
RECEPTOR HEIGHT (M) = .0000
URBAN/RURAL OPTION = RURAL

BUOY. FLUX = 133.643 M**4/S**3; MOM. FLUX = 635.851 M**4/S**2.

FINAL STABLE PLUME HEIGHT (M) = 192.9
DISTANCE TO FINAL RISE (M) = 151.3

TERR HT (M)	DIST (M)	*VALLEY 24-HR CALCS* MAX 24-HR CONC (UG/M**3)	CONC (UG/M**3)	PLUME HT ABOVE STK BASE (M)	**SIMPLE TERRAIN 24-HR CALCS** CONC (UG/M**3)	PLUME HT ABOVE STK HGT (M)	U10M	USTK SC (M/S)	
150.	1000.	243.4	243.4	192.9	161.1	32.9	4	15.0	21.2
200.	2000.	284.3	284.3	192.9	.0000	.0	0	.0	.0
200.	5000.	91.39	91.39	192.9	.0000	.0	0	.0	.0
200.	10000.	37.36	37.36	192.9	.0000	.0	0	.0	.0

****
*** SUMMARY OF SCREEN MODEL RESULTS ***
****

CALCULATION PROCEDURE	MAX CONC (UG/M**3)	DIST TO MAX (M)	TERRAIN HT (M)
COMPLEX TERRAIN	284.3	2000.	200. (24-HR CONC)

```
**************************************************
** REMEMBER TO INCLUDE BACKGROUND CONCENTRATIONS **
**************************************************
```

Figure 2. SCREEN Point Source Example for Complex Terrain

09/07/95
12:00:00

*** SCREEN3 MODEL RUN ***
*** VERSION DATED 95250 ***

POINT SOURCE EXAMPLE WITH BUILDING DOWNWASH

SIMPLE TERRAIN INPUTS:
SOURCE TYPE = POINT
EMISSION RATE (G/S) = 100.000
STACK HEIGHT (M) = 100.0000
STK INSIDE DIAM (M) = 2.0000
STK EXIT VELOCITY (M/S)= 15.0000
STK GAS EXIT TEMP (K) = 450.0000
AMBIENT AIR TEMP (K) = 293.0000
RECEPTOR HEIGHT (M) = .0000
URBAN/RURAL OPTION = URBAN
BUILDING HEIGHT (M) = 80.0000
MIN HORIZ BLDG DIM (M) = 80.0000
MAX HORIZ BLDG DIM (M) = 100.0000

BUOY. FLUX = 51.319 M**4/S**3; MOM. FLUX = 146.500 M**4/S**2.

*** FULL METEOROLOGY ***

****
*** SCREEN AUTOMATED DISTANCES ***
****

*** TERRAIN HEIGHT OF 0. M ABOVE STACK BASE USED FOR FOLLOWING DISTANCES ***

DIST (M)	CONC (UG/M**3)	STAB	U10M (M/S)	USTK (M/S)	MIX HT (M)	PLUME HT (M)	SIGMA Y (M)	SIGMA Z (M)	DWASH
100.	.0000	0	.0	.0	.0	.00	.00	.00	NA
200.	.0000	0	.0	.0	.0	.00	.00	.00	NA
300.	631.6	1	1.5	2.1	480.0	125.11	90.71	82.09	SS
400.	517.4	1	1.5	2.1	480.0	140.59	118.85	113.59	SS
500.	494.6	6	1.0	2.0	10000.0	113.08	50.21	50.05	SS
600.	578.0	6	1.0	2.0	10000.0	113.08	59.27	54.62	SS
700.	638.4	6	1.0	2.0	10000.0	113.08	68.06	59.18	SS
800.	715.3	6	1.0	2.0	10000.0	113.08	76.59	65.44	SS

```
 900.  699.4     6   1.0   2.0 10000.0  113.08  84.89  68.33   SS
1000.  681.9     6   1.0   2.0 10000.0  113.08  92.97  71.13   SS

MAXIMUM 1-HR CONCENTRATION AT OR BEYOND   100. M:
 800.  715.3     6   1.0   2.0 10000.0  113.08  76.59  65.44   SS

DWASH=   MEANS NO CALC MADE (CONC = 0.0)
DWASH=NO MEANS NO BUILDING DOWNWASH USED
DWASH=HS MEANS HUBER-SNYDER DOWNWASH USED
DWASH=SS MEANS SCHULMAN-SCIRE DOWNWASH USED
DWASH=NA MEANS DOWNWASH NOT APPLICABLE, X<3*LB
```

Figure 3. SCREEN Point Source Example with Building Downwash (Page 1 of 2)

```
*** CAVITY CALCULATION - 1 ***      *** CAVITY CALCULATION - 2 ***
 CONC (UG/M**3)    =   3168.       CONC (UG/M**3)    =   1691.
 CRIT WS @10M (M/S) =    3.32       CRIT WS @10M (M/S) =    7.77
 CRIT WS @ HS (M/S) =    5.26       CRIT WS @ HS (M/S) =   12.32
 DILUTION WS (M/S) =    2.63       DILUTION WS (M/S) =    6.16
 CAVITY HT (M)     =  114.88       CAVITY HT (M)     =  105.20
 CAVITY LENGTH (M) =  142.41       CAVITY LENGTH (M) =  101.30
 ALONGWIND DIM (M) =   80.00       ALONGWIND DIM (M) =  100.00

   ************************************
   *** SUMMARY OF SCREEN MODEL RESULTS ***
   ************************************

 CALCULATION       MAX CONC   DIST TO   TERRAIN
  PROCEDURE       (UG/M**3)   MAX (M)   HT (M)
--------------   -----------  -------  -------
SIMPLE TERRAIN     715.3        800.      0.

BUILDING CAVITY-1  3168.        142.     -- (DIST = CAVITY LENGTH)
BUILDING CAVITY-2  1691.        101.     -- (DIST = CAVITY LENGTH)


**************************************************
** REMEMBER TO INCLUDE BACKGROUND CONCENTRATIONS **
**************************************************
```

Figure 3. SCREEN Point Source Example with Building Downwash (Page 2 of 2)

This page is intentionally left blank.

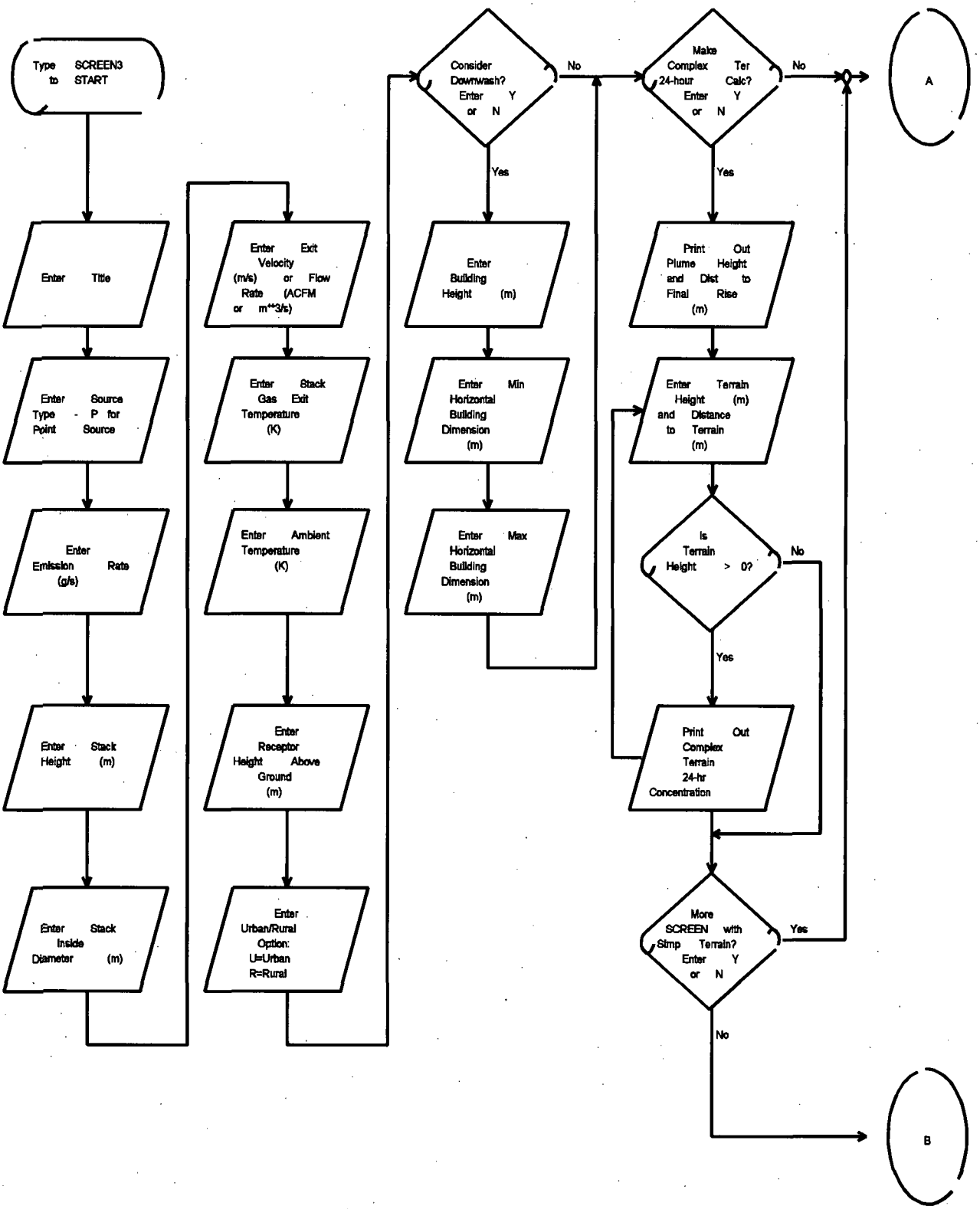

Figure 4. Flow Chart of Inputs and Outputs for SCREEN Point Source (Page 1 of 2)

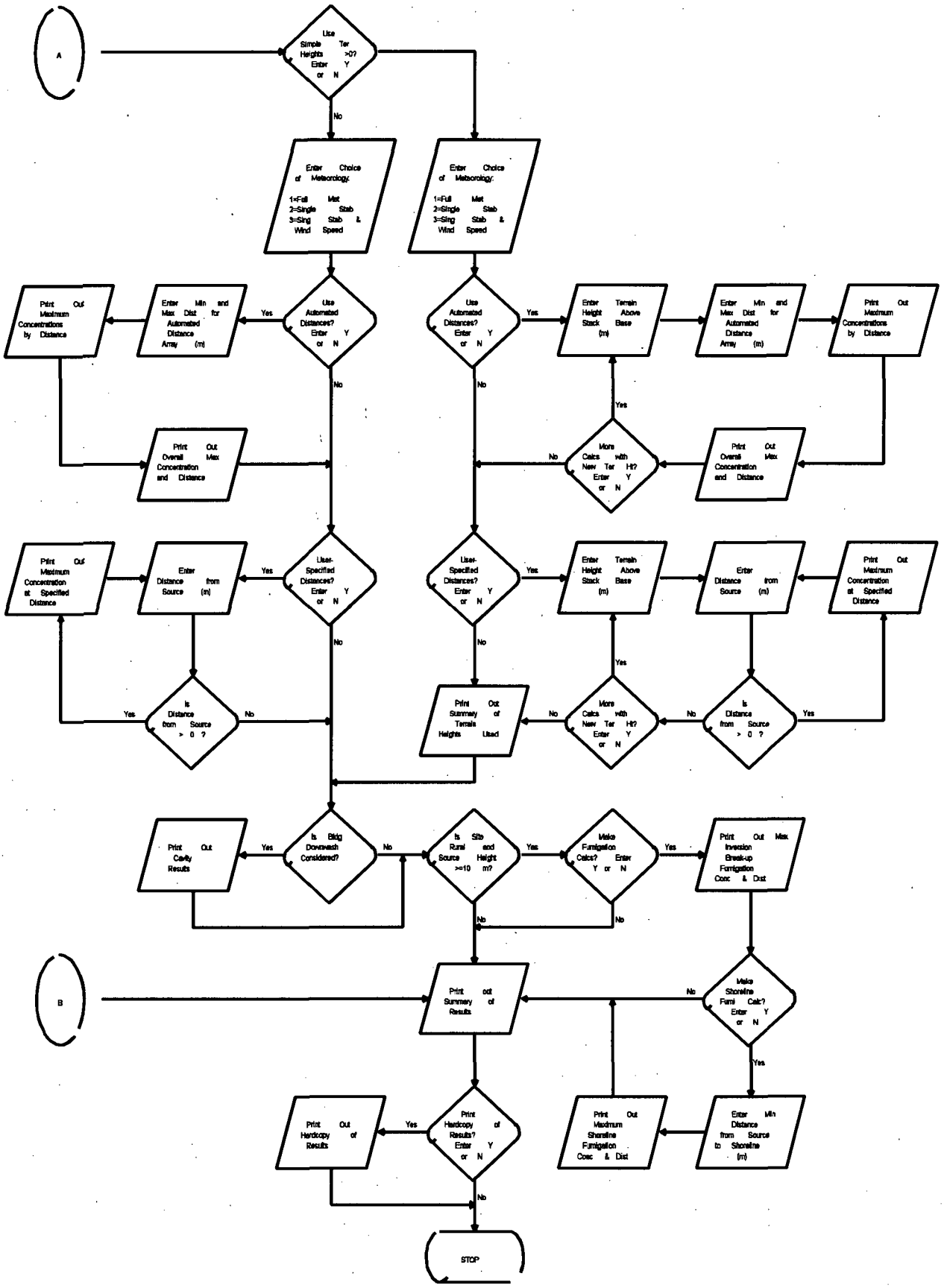

Figure 4. Flow Chart of Inputs and Outputs for SCREEN Point Source (Page 2 of 2)

09/07/95
12:00:00

*** SCREEN3 MODEL RUN ***
*** VERSION DATED 95250 ***

FLARE RELEASE EXAMPLE

SIMPLE TERRAIN INPUTS:
SOURCE TYPE = FLARE
EMISSION RATE (G/S) = 1000.00
FLARE STACK HEIGHT (M) = 100.0000
TOT HEAT RLS (CAL/S) = .100000E+08
RECEPTOR HEIGHT (M) = .0000
URBAN/RURAL OPTION = RURAL
EFF RELEASE HEIGHT (M) = 110.1150
BUILDING HEIGHT (M) = .0000
MIN HORIZ BLDG DIM (M) = .0000
MAX HORIZ BLDG DIM (M) = .0000

BUOY. FLUX = 165.803 M**4/S**3; MOM. FLUX = 101.103 M**4/S**2.

*** FULL METEOROLOGY ***

****
*** SCREEN AUTOMATED DISTANCES ***
****

*** TERRAIN HEIGHT OF 0. M ABOVE STACK BASE USED FOR FOLLOWING DISTANCES ***

DIST (M)	CONC (UG/M**3)	STAB	U10M (M/S)	USTK (M/S)	MIX HT (M)	PLUME HT (M)	SIGMA Y (M)	SIGMA Z (M)	DWASH
250.	.7733E-04	5	1.0	2.3	10000.0	233.54	38.05	36.05	NO
300.	.2501E-03	1	3.0	3.5	960.0	344.28	78.46	57.07	NO
400.	1.283	1	3.0	3.5	960.0	344.28	100.36	80.87	NO
500.	66.54	1	3.0	3.5	960.0	344.28	121.51	113.75	NO
600.	407.0	1	3.0	3.5	960.0	344.28	142.09	161.96	NO
700.	741.2	1	3.0	3.5	960.0	344.28	162.21	220.50	NO
800.	944.9	1	1.5	1.8	579.5	578.45	210.37	308.17	NO
900.	1303.	1	1.5	1.8	579.5	578.45	231.47	386.36	NO
1000.	1449.	1	1.5	1.8	579.5	578.45	247.92	473.16	NO
1100.	1448.	1	1.5	1.8	579.5	578.45	263.50	571.19	NO
1200.	1387.	1	1.5	1.8	579.5	578.45	279.21	680.86	NO
1300.	1315.	1	1.5	1.8	579.5	578.45	295.03	802.07	NO

1400.	1248.	1	1.5	1.8	579.5	578.45	310.90	934.77	NO
1500.	1187.	1	1.5	1.8	579.5	578.45	326.80	1078.93	NO
1600.	1132.	1	1.5	1.8	579.5	578.45	342.72	1234.58	NO
1700.	1082.	1	1.5	1.8	579.5	578.45	358.64	1401.74	NO
1800.	1036.	1	1.5	1.8	579.5	578.45	374.55	1580.46	NO
1900.	993.9	1	1.5	1.8	579.5	578.45	390.43	1770.78	NO
2000.	957.5	1	1.0	1.2	813.6	812.62	432.95	1978.42	NO

MAXIMUM 1-HR CONCENTRATION AT OR BEYOND 250. M:

1046.	1461.	1	1.5	1.8	579.5	578.45	254.91	515.82	NO

DWASH= MEANS NO CALC MADE (CONC = 0.0)
DWASH=NO MEANS NO BUILDING DOWNWASH USED
DWASH=HS MEANS HUBER-SNYDER DOWNWASH USED
DWASH=SS MEANS SCHULMAN-SCIRE DOWNWASH USED
DWASH=NA MEANS DOWNWASH NOT APPLICABLE, X<3*LB

Figure 5. SCREEN Flare Release Example (Page 1 of 2)

```
***************************************
*** SUMMARY OF SCREEN MODEL RESULTS ***
***************************************

 CALCULATION        MAX CONC    DIST TO   TERRAIN
  PROCEDURE        (UG/M**3)    MAX (M)    HT (M)
--------------   -----------  -------  -------
SIMPLE TERRAIN      1461.        1046.       0.


****************************************************
** REMEMBER TO INCLUDE BACKGROUND CONCENTRATIONS **
****************************************************
```

Figure 5. SCREEN Flare Release Example (Page 2 of 2)

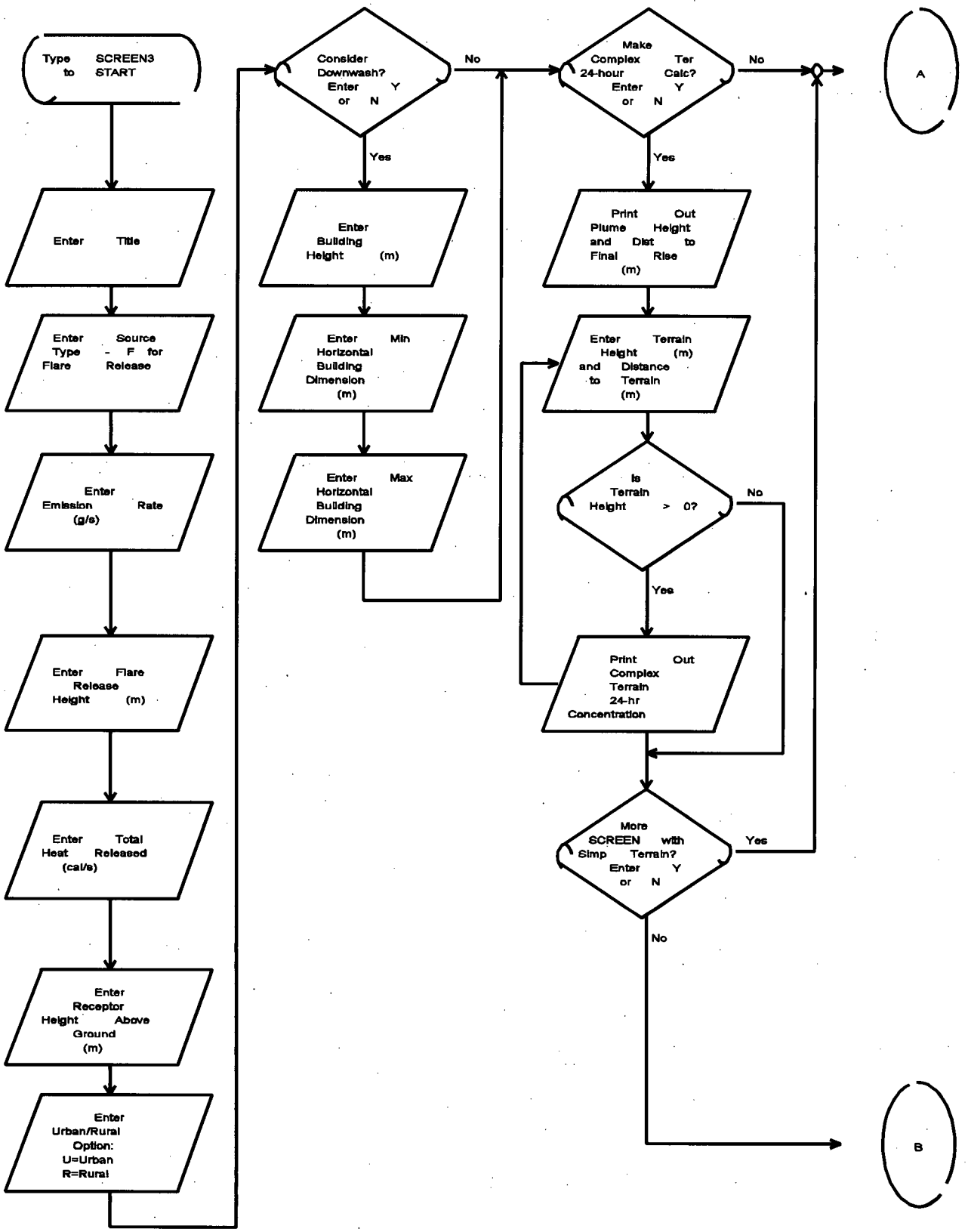

Figure 6. Flow Chart of Inputs and Outputs for SCREEN Flare Release (Page 1 of 2)

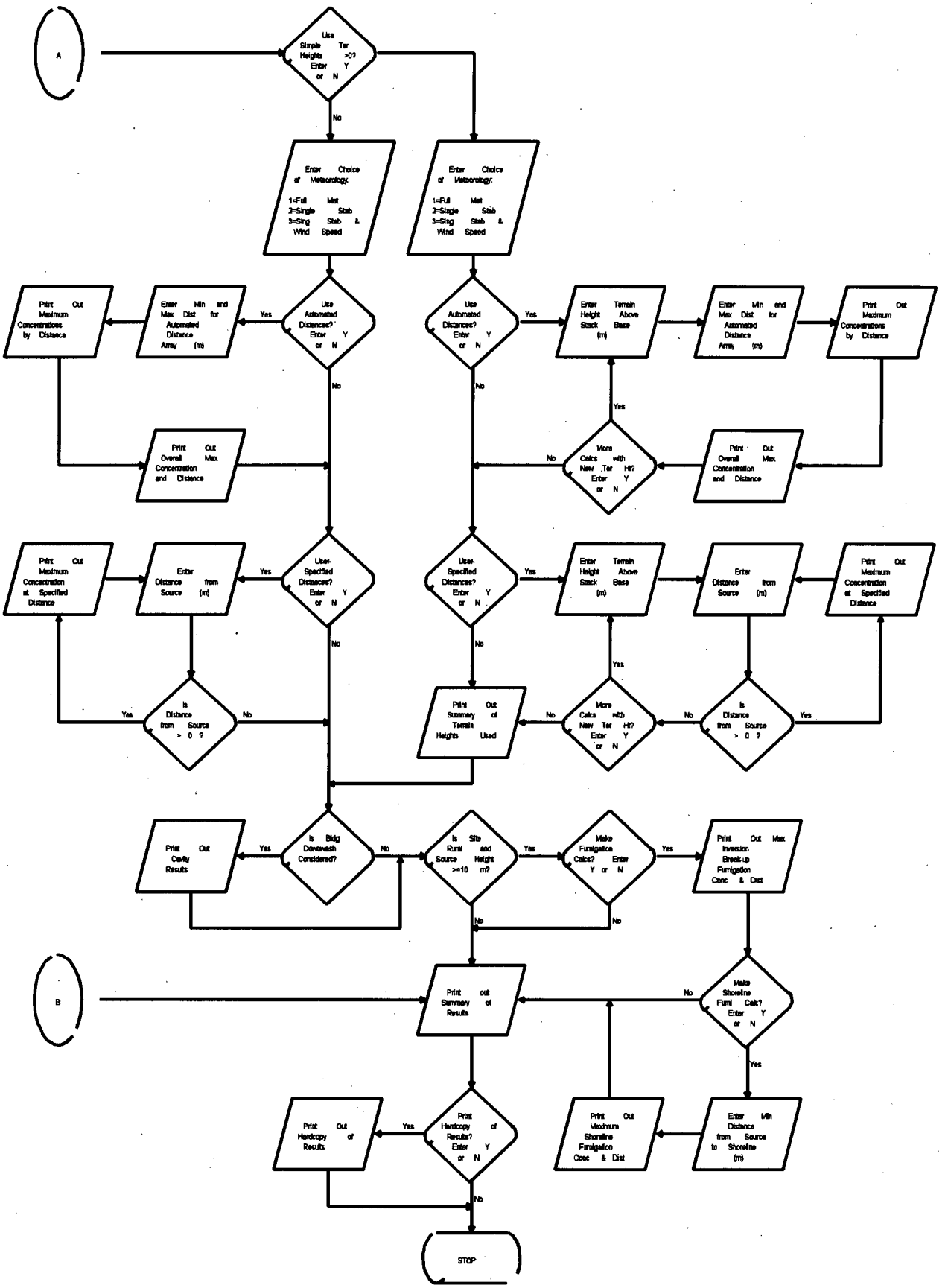

Figure 6. Flow Chart of Inputs and Outputs for SCREEN Flare Release (Page 2 of 2)

09/07/95
12:00:00

*** SCREEN3 MODEL RUN ***
*** VERSION DATED 95250 ***

AREA SOURCE EXAMPLE

SIMPLE TERRAIN INPUTS:
SOURCE TYPE = AREA
EMISSION RATE (G/(S-M**2)) = .250000E-02
SOURCE HEIGHT (M) = 5.0000
LENGTH OF LARGER SIDE (M) = 200.0000
LENGTH OF SMALLER SIDE (M) = 200.0000
RECEPTOR HEIGHT (M) = .0000
URBAN/RURAL OPTION = URBAN
MODEL ESTIMATES DIRECTION TO MAX CONCENTRATION

BUOY. FLUX = .000 M**4/S**3; MOM. FLUX = .000 M**4/S**2.

*** FULL METEOROLOGY ***

****
*** SCREEN AUTOMATED DISTANCES ***
****

*** TERRAIN HEIGHT OF 0. M ABOVE STACK BASE USED FOR FOLLOWING DISTANCES ***

DIST (M)	CONC (UG/M**3)	STAB	U10M (M/S)	USTK (M/S)	MIX HT (M)	PLUME HT (M)	MAX DIR (DEG)
150.	.4067E+05	5	1.0	1.0	10000.0	5.00	43.
200.	.3784E+05	5	1.0	1.0	10000.0	5.00	45.
300.	.2430E+05	5	1.0	1.0	10000.0	5.00	45.
400.	.1755E+05	5	1.0	1.0	10000.0	5.00	45.
500.	.1356E+05	5	1.0	1.0	10000.0	5.00	45.
600.	.1091E+05	5	1.0	1.0	10000.0	5.00	45.
700.	9028.	5	1.0	1.0	10000.0	5.00	45.
800.	7629.	5	1.0	1.0	10000.0	5.00	45.
900.	6559.	5	1.0	1.0	10000.0	5.00	44.
1000.	5718.	5	1.0	1.0	10000.0	5.00	45.

MAXIMUM 1-HR CONCENTRATION AT OR BEYOND 150. M:

168.	.4178E+05	5	1.0	1.0	10000.0	5.00	45.

Figure 7. SCREEN Area Source Example (Page 1 of 2)

```
********************************
*** SCREEN DISCRETE DISTANCES ***
********************************

*** TERRAIN HEIGHT OF   0. M ABOVE STACK BASE USED FOR FOLLOWING DISTANCES ***

 DIST    CONC          U10M   USTK  MIX HT   PLUME  MAX DIR
  (M)  (UG/M**3)   STAB  (M/S)  (M/S)    (M)   HT (M)   (DEG)
------- ---------- ---- ----- ----- ------ ------ -------
 5000.   718.1       5    1.0    1.0 10000.0   5.00     38.
10000.   321.3       5    1.0    1.0 10000.0   5.00      1.
20000.   150.4       5    1.0    1.0 10000.0   5.00     31.
50000.   71.25       4    1.0    1.0   320.0   5.00     11.

   ***************************************
   *** SUMMARY OF SCREEN MODEL RESULTS ***
   ***************************************

 CALCULATION     MAX CONC   DIST TO  TERRAIN
  PROCEDURE     (UG/M^3)   MAX (M)   HT (M)
-------------- ----------- ------- -------
SIMPLE TERRAIN   .4178E+05    168.      0.


****************************************************
** REMEMBER TO INCLUDE BACKGROUND CONCENTRATIONS **
****************************************************
```

Figure 7. SCREEN Area Source Example (Page 2 of 2)

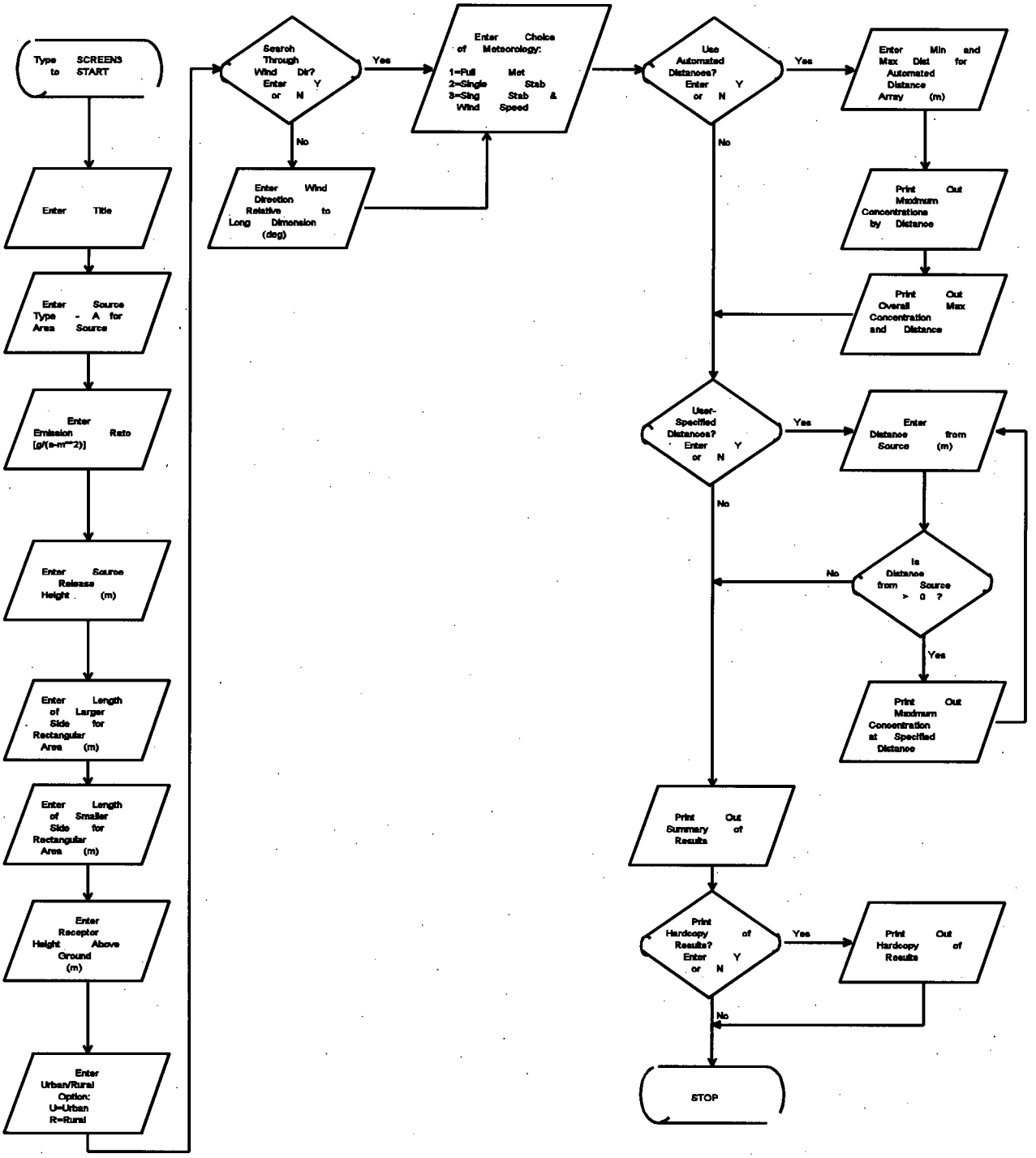

Figure 8. Flow Chart of Inputs and Outputs for SCREEN Area Source

09/07/95
12:00:00

*** SCREEN3 MODEL RUN ***
*** VERSION DATED 95250 ***

VOLUME SOURCE EXAMPLE

SIMPLE TERRAIN INPUTS:
SOURCE TYPE = VOLUME
EMISSION RATE (G/S) = 1.00000
SOURCE HEIGHT (M) = 10.0000
INIT. LATERAL DIMEN (M) = 50.0000
INIT. VERTICAL DIMEN (M) = 20.0000
RECEPTOR HEIGHT (M) = .0000
URBAN/RURAL OPTION = RURAL

BUOY. FLUX = .000 M**4/S**3; MOM. FLUX = .000 M**4/S**2.

*** FULL METEOROLOGY ***

****
*** SCREEN AUTOMATED DISTANCES ***
****

*** TERRAIN HEIGHT OF 0. M ABOVE STACK BASE USED FOR FOLLOWING DISTANCES ***

DIST (M)	CONC (UG/M**3)	STAB	U10M (M/S)	USTK (M/S)	MIX HT (M)	PLUME HT (M)	SIGMA Y (M)	SIGMA Z (M)	DWASH
100.	.0000	0	.0	.0	.0	.00	.00	.00	
200.	239.5	6	1.0	1.0	10000.0	10.00	55.68	21.40	NO
300.	224.1	6	1.0	1.0	10000.0	10.00	58.61	21.82	NO
400.	209.1	6	1.0	1.0	10000.0	10.00	61.51	22.40	NO
500.	195.7	6	1.0	1.0	10000.0	10.00	64.41	22.96	NO
600.	183.8	6	1.0	1.0	10000.0	10.00	67.28	23.52	NO
700.	173.0	6	1.0	1.0	10000.0	10.00	70.15	24.06	NO
800.	163.2	6	1.0	1.0	10000.0	10.00	73.00	24.60	NO
900.	154.4	6	1.0	1.0	10000.0	10.00	75.84	25.12	NO
1000.	146.3	6	1.0	1.0	10000.0	10.00	78.66	25.64	NO

MAXIMUM 1-HR CONCENTRATION AT OR BEYOND 100. M:

109.	257.5	6	1.0	1.0	10000.0	10.00	53.04	20.78	NO

```
DWASH=   MEANS NO CALC MADE (CONC = 0.0)
DWASH=NO MEANS NO BUILDING DOWNWASH USED
DWASH=HS MEANS HUBER-SNYDER DOWNWASH USED
DWASH=SS MEANS SCHULMAN-SCIRE DOWNWASH USED
DWASH=NA MEANS DOWNWASH NOT APPLICABLE, X<3*LB

   ***************************************
   *** SUMMARY OF SCREEN MODEL RESULTS ***
   ***************************************

 CALCULATION        MAX CONC    DIST TO   TERRAIN
  PROCEDURE        (UG/M**3)    MAX (M)    HT (M)
--------------   -----------  -------  -------
SIMPLE TERRAIN      257.5        109.       0.


**************************************************
** REMEMBER TO INCLUDE BACKGROUND CONCENTRATIONS **
**************************************************
```

Figure 9. SCREEN Volume Source Example

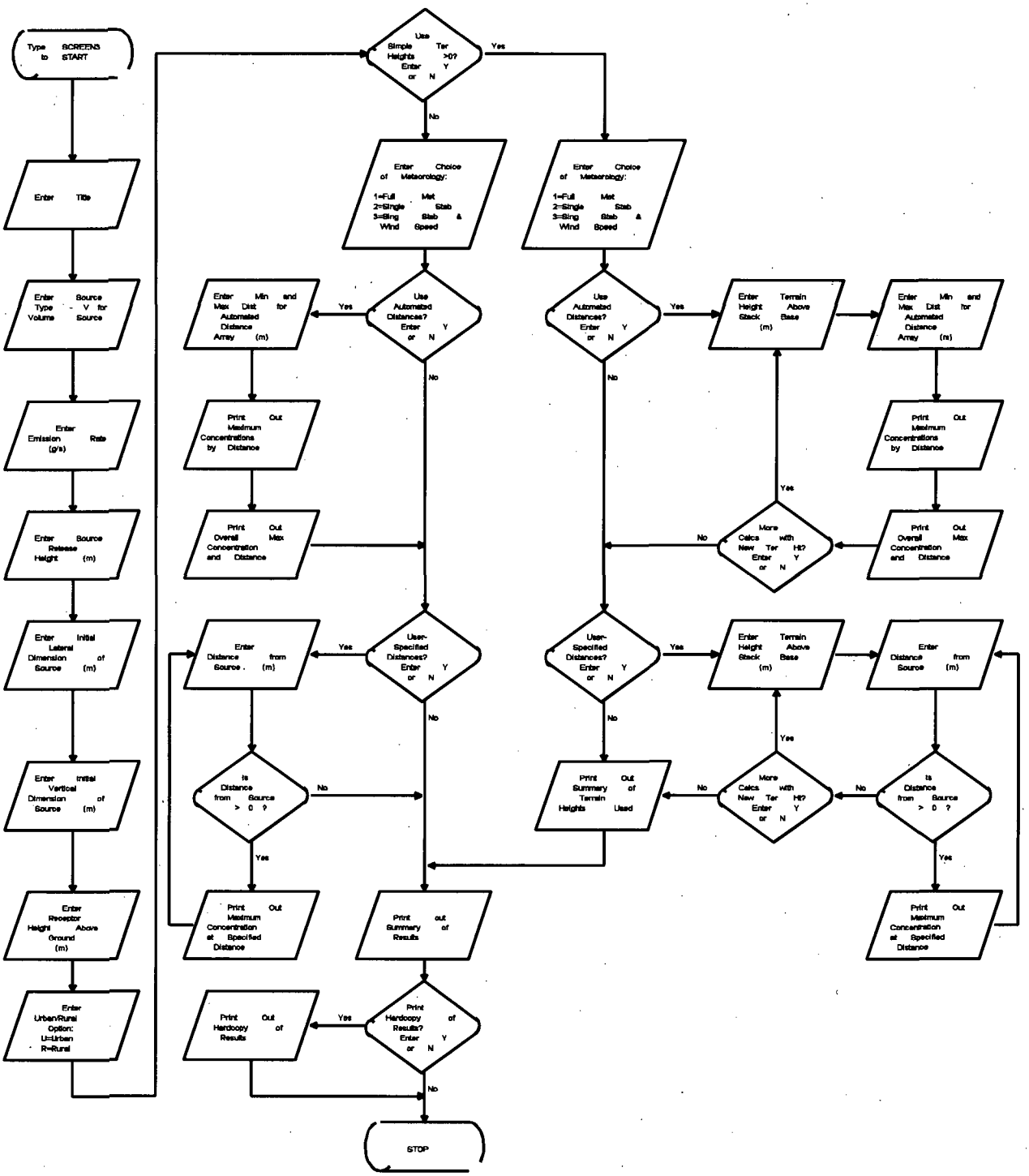

Figure 10. Flow Chart of Inputs and Outputs for SCREEN Volume Source

3. TECHNICAL DESCRIPTION

Most of the techniques used in the SCREEN model are based on assumptions and methods common to other EPA dispersion models. For the sake of brevity, lengthy technical descriptions that are available elsewhere are not duplicated here. This discussion will concentrate on how those methods are incorporated into SCREEN and on describing those techniques that are unique to SCREEN.

3.1 Basic Concepts of Dispersion Modeling

SCREEN uses a Gaussian plume model that incorporates source-related factors and meteorological factors to estimate pollutant concentration from continuous sources. It is assumed that the pollutant does not undergo any chemical reactions, and that no other removal processes, such as wet or dry deposition, act on the plume during its transport from the source. The Gaussian model equations and the interactions of the source-related and meteorological factors are described in Volume II of the ISC user's guide (EPA, 1995b), and in the Workbook of Atmospheric Dispersion Estimates (Turner, 1970).

The basic equation for determining ground-level concentrations under the plume centerline is:

$$
\begin{aligned}
X = Q/(2\pi u_s \sigma_y \sigma_z)\{ & \exp[-\tfrac{1}{2}((z_r-h_e)/\sigma_z)^2] \\
& + \exp[-\tfrac{1}{2}((z_r+h_e)/\sigma_z)^2] \\
& + \sum_{N=1}^{k} [\ \exp[-\tfrac{1}{2}((z_r-h_e-2Nz_i)/\sigma_z)^2] \\
& + \exp[-\tfrac{1}{2}((z_r+h_e-2Nz_i)/\sigma_z)^2] \\
& + \exp[-\tfrac{1}{2}((z_r-h_e+2Nz_i)/\sigma_z)^2] \\
& + \exp[-\tfrac{1}{2}((z_r+h_e+2Nz_i)/\sigma_z)^2]\ ]\ \} \qquad (1)
\end{aligned}
$$

where:

X = concentration (g/m^3)
Q = emission rate (g/s)
π = 3.141593
u_s = stack height wind speed (m/s)
σ_y = lateral dispersion parameter (m)
σ_z = vertical dispersion parameter (m)
z_r = receptor height above ground (m)
h_e = plume centerline height (m)
z_i = mixing height (m)
k = summation limit for multiple reflections of plume off of the ground and elevated inversion, usually ≤ 4.

Note that for stable conditions and/or mixing heights greater than or equal to 10,000m, unlimited mixing is assumed and the summation term is assumed to be zero.

Equation 1 is used to model the plume impacts from point sources, flare releases, and volume releases in SCREEN. The SCREEN volume source option uses a virtual point source approach, as described in Volume II (Section 1.2.2) of the ISC model user's guide (EPA, 1995b). The user inputs the initial lateral and vertical dimensions of the volume source, as described in Section 2.7 above.

The SCREEN model uses a numerical integration algorithm for modeling impacts from area sources, as described in Volume II (Section 1.2.3) of the ISC model user's guide (EPA, 1995b). The area source is assumed to be a rectangular shape, and the model can be used to estimate concentrations within the area.

3.2 Worst Case Meteorological Conditions

SCREEN examines a range of stability classes and wind speeds to identify the "worst case" meteorological conditions, i.e., the combination of wind speed and stability that results in the maximum ground level concentrations. The wind speed and stability class combinations used by SCREEN are given in Table 2. The 10-meter wind speeds given in Table 2 are adjusted to stack height by SCREEN using the wind profile power law exponents given in Table 3-1 of the screening procedures document. For release heights of less than 10 meters, the wind speeds listed in Table 2 are used without adjustment. For distances greater than 50 km (available with the discrete distance option), SCREEN sets 2 m/s as the lower limit for the 10-meter wind speed to avoid unrealistic transport times. Table 2 includes some cases that may not be considered standard stability class/wind speed combinations, namely E with winds less than 2 m/s, and F with winds greater than 3 m/s. The combinations of E and winds of 1 - 1.5 m/s are often excluded because the algorithm developed by Turner (1964) to determine stability class from routine National Weather Service (NWS) observations excludes cases of E stability for wind speeds less than 4 knots (2 m/s). These combinations are included in SCREEN because they are valid combinations that could appear in a data set using on-site meteorological data with another stability class method. A wind speed of 6 knots (the highest speed for F stability in Turner's scheme) measured at a typical NWS anemometer height of 20 feet (6.1 meters) corresponds to a 10 meter wind speed of 4 m/s under F stability. Therefore the combination of F and 4 m/s has been included.

Table 2. Wind Speed and Stability Class Combinations Used by the SCREEN Model

Stability Class	10-m Wind Speed (m/s) 1	1.5	2	2.5	3	3.5	4	4.5	5	8	10	15	20
A	*	*	*	*	*								
B	*	*	*	*	*	*	*	*	*				
C	*	*	*	*	*	*	*	*	*	*	*		
D	*	*	*	*	*	*	*	*	*	*	*	*	*
E	*	*	*	*	*	*	*	*	*				
F	*	*	*	*	*	*	*						

The user has three choices of meteorological data to examine. The first choice, which should be used in most applications, is to use "Full Meteorology" which examines all six stability classes (five for urban sources) and their associated wind speeds. Using full meteorology with the automated distance array (described in Section 2), SCREEN prints out the maximum concentration for each distance, and the overall maximum and associated distance. The overall maximum concentration from SCREEN represents the controlling 1-hour value corresponding to the result from Procedures (a) - (c) in Step 4 of Section 4.2. Full meteorology is used instead of the A, C, and E or F subset used by the hand calculations because SCREEN provides maximum

concentrations as a function of distance, and stability classes A, C and E or F may not be controlling for all distances. The use of A, C, and E or F may also not give the maximum concentration when building downwash is considered. The second choice is to input a single stability class (1 = A, 2 = B, ..., 6 = F). SCREEN will examine a range of wind speeds for that stability class only. Using this option the user is able to determine the maximum concentrations associated with each of the individual procedures, (a) - (c), in Step 4 of Section 4.2. The third choice is to specify a single stability class and wind speed. The last two choices were originally put into SCREEN to facilitate testing only, but they may be useful if particular meteorological conditions are of concern. However, they are not recommended for routine uses of SCREEN.

The mixing height used in SCREEN for neutral and unstable conditions (classes A-D) is based on an estimate of the mechanically driven mixing height. The mechanical mixing height, z_m (m), is calculated (Randerson, 1984) as

$$z_m = 0.3\ u^*/f \tag{2}$$

where: u^* = friction velocity (m/s)
f = Coriolis parameter ($9.374 \times 10^{-5}\ s^{-1}$ at 40° latitude)

Using a log-linear profile of the wind speed, and assuming a surface roughness length of about 0.3m, u^* is estimated from the 10-meter wind speed, u_{10}, as

$$u^* = 0.1\ u_{10} \tag{3}$$

Substituting for u^* in Equation 2 we have

$$z_m = 320\ u_{10}. \tag{4}$$

The mechanical mixing height is taken to be the minimum daytime mixing height. To be conservative for limited mixing calculations, if the value of z_m from Equation 3 is less than the plume height, h_e, then the mixing height used in calculating the concentration is set equal to $h_e + 1$. For stable conditions, the mixing height is set equal to 10,000m to represent unlimited mixing.

3.3 Plume Rise for Point Sources

The use of the methods of Briggs to estimate plume rise are discussed in detail in Section 1.1.4 of Volume II of the ISC user's guide (EPA, 1995b). These methods are also incorporated in the SCREEN model.

Stack tip downwash is estimated following Briggs (1973, p.4)

for all sources except those employing the Schulman-Scire downwash algorithm. Buoyancy flux for non-flare point sources is calculated from

$$F_b = g v_s d_s^2 (T_s - T_a)/(4T_s), \quad (5)$$

which is described in Section 4 of the screening procedures document and is equivalent to Briggs' (1975, p. 63) Equation 12.

Buoyancy flux for flare releases is estimated from

$$F_b = 1.66 \times 10^{-5} \times H, \quad (6)$$

where H is the total heat release rate of the flare (cal/s). This formula was derived from Equation 4.20 of Briggs (1969), assuming T_a = 293K, p = 1205 g/m, c_p = 0.24 cal/gK, and that the sensible heat release rate, Q_H = (0.45) H. The sensible heat rate is based on the assumption that 55 percent of the total heat released is lost due to radiation (Leahey and Davies, 1984). The buoyancy flux for flares is calculated in SCREEN by assuming effective stack parameters of v_s = 20 m/s, T_s = 1,273K, and solving for an effective stack diameter, $d_s = 9.88 \times 10^{-4} (Q_H)^{0.5}$.

The momentum flux, which is used in estimating plume rise for building downwash effects, is calculated from,

$$F_m = v_s^2 d_s^2 T_a/(4T_s). \quad (7)$$

The ISC user's guide (EPA, 1995b) describes the equations used to estimate buoyant plume rise and momentum plume rise for both unstable/neutral and stable conditions. Also described are transitional plume rise and how to estimate the distance to final rise. Final plume rise is used in SCREEN for all cases with the exception of the complex terrain screening procedure and for building downwash effects.

The buoyant line source plume rise formulas that are used for the Schulman-Scire downwash scheme are described in Section 1.1.4.11 of Volume II of the ISC user's guide (EPA, 1995b). These formulas apply to sources where $h_s \leq H_b + 0.5L_b$. For sources subject to downwash but not meeting this criterion, the downwash algorithms of Huber and Snyder (EPA, 1995b) are used, which employ the Briggs plume rise formulas referenced above.

3.4 Dispersion Parameters

The formulas used for calculating vertical (σ_z) and lateral (σ_y) dispersion parameters for rural and urban sites are described in Section 1.1.5 of Volume II of the ISC user's guide (EPA, 1995b).

3.5 Buoyancy Induced Dispersion

Throughout the SCREEN model, with the exception of the Schulman-Scire downwash algorithm, the dispersion parameters, σ_y and σ_z, are adjusted to account for the effects of buoyancy induced dispersion as follows:

$$\sigma_{ye} = (\sigma_y^2 + (\Delta h/3.5)^2)^{0.5} \qquad (8)$$

$$\sigma_{ze} = (\sigma_z^2 + (\Delta h/3.5)^2)^{0.5}$$

where Δh is the distance-dependent plume rise. (Note that for inversion break-up and shoreline fumigation, distances are always beyond the distance to final rise, and therefore Δh = final plume rise).

3.6 Building Downwash

3.6.1 Cavity Recirculation Region

The cavity calculations are a revision of the procedure described in the Regional Workshops on Air Quality Modeling Summary Report, Appendix C (EPA, 1983), and are based largely on results published by Hosker (1984).

If non-zero building dimensions are input to SCREEN for either point or flare releases, then cavity calculations will be made as follows. The cavity height, h_c (m), is estimated based on the following equation from Hosker (1984):

$$h_c = h_b\ (1.0 + 1.6 \exp\ (-1.3L/h_b)), \qquad (9)$$

where: h_b = building height (m)
L = alongwind dimension of the building (m).

Using the plume height based on momentum rise at two building heights downwind, including stack tip downwash, a critical (i.e., minimum) stack height wind speed is calculated that will just put the plume into the cavity (defined by plume centerline height = cavity height). The critical wind speed is then adjusted from stack height to 10-meter using a power law with an exponent of 0.2 to represent neutral conditions (no attempt is made to differentiate between urban or rural sites or different stability classes). If the critical wind speed (adjusted to 10-meters) is less than or equal to 20 m/s, then a cavity concentration is calculated, otherwise the cavity concentration is assumed to be zero. Concentrations within the cavity, X_c, are estimated by the following approximation (Hosker, 1984):

$$X_c = Q/(1.5\ A_p\ u) \qquad (10)$$

where: Q = emission rate (g/s)
A_p = $H_b \cdot W$ = cross-sectional area of the building normal to the wind (m^2)

W = crosswind dimension of the building (m)
u = wind speed (m/s).

For u, a value of one-half the stack height critical wind speed is used, but not greater than 10 m/s and not less than 1 m/s. Thus, the calculation of X_c is linked to the determination of a critical wind speed. The concentration, X_c, is assumed to be uniform within the cavity.

The cavity length, x_r, measured from the lee side of the building, is estimated by the following (Hosker, 1984):

(1) for short buildings ($L/h_b \leq 2$),

$$x_r = \frac{(A)(W)}{1.0 + B(W/h_b)} \tag{11}$$

(2) for long buildings ($L/h_b \geq 2$),

$$x_r = \frac{1.75\ (W)}{1.0 + 0.25(W/h_b)} \tag{12}$$

where:
h_b = building height (m)
L = alongwind building dimension (m)
W = crosswind building dimension (m)
$A = -2.0 + 3.7\ (L/h_b)^{-1/3}$, and
$B = -0.15 + 0.305\ (L/h_b)^{-1/3}$.

The equations above for cavity height, concentration and cavity length are all sensitive to building orientation through the terms L, W and A_p. Therefore, the entire cavity procedure is performed for two orientations, first with the minimum horizontal dimension alongwind and second with the maximum horizontal dimension alongwind. For screening purposes, this is thought to give reasonable bounds on the cavity estimates. The first case will maximize the cavity height, and therefore minimize the critical wind speed. However, the A_p term will also be larger and will tend to reduce concentrations. The highest concentration that potentially effects ambient air should be used as the controlling value for the cavity procedure.

3.6.2 Wake Region

The calculations for the building wake region are based on the ISC model (EPA, 1995b). The wake effects are divided into two regions, one referred to as the "near wake" extending from $3L_b$ to $10L_b$ (L_b is the lesser of the building height, h_b, and maximum projected width), and the other as the "far wake" for distances greater than $10L_b$. For the SCREEN model, the maximum projected width is calculated from the input minimum and maximum

horizontal dimensions as $(L^2 + W^2)^{0.5}$. The remainder of the building wake calculations in SCREEN are based on the ISC user's guide (EPA, 1995b).

It should be noted that, unlike the cavity calculation, the comparison of plume height (due to momentum rise at two building heights) to wake height to determine if wake effects apply does not include stack tip downwash. This is done for consistency with the ISC model.

3.7 Fumigation

3.7.1 Inversion Break-up Fumigation

The inversion break-up screening calculations are based on procedures described in the Workbook of Atmospheric Dispersion Estimates (Turner, 1970). The distance to maximum fumigation is based on an estimate of the time required for the mixing layer to develop from the top of the stack to the top of the plume, using Equation 5.5 of Turner (1970):

$$x_{max} = u\ t_m = (u\ p_a\ c_p/R)\ (\Delta\Theta/\Delta z)\ (h_i - h_s)\ [(h_i + h_s)/2] \qquad (13)$$

where:

x_{max} = downwind distance to maximum concentration (m)
t_m = time required for mixing layer to develop from top of stack to top of plume(s)
u = wind speed (2.5 m/s assumed)
p_a = ambient air density (1205 g/m^3 at 20°C)
c_p = specific heat of the air at constant pressure (0.24 cal/gK)
R = net rate of sensible heating of an air column by solar radiation (about 67 cal/m^2/s)
$\Delta\Theta/\Delta z$ = vertical potential temperature gradient (assume 0.035 K/m for F stability)
h_i = height of the top of the plume (m) = $h_e + 2\sigma_{ze}$ (h_e is the plume centerline height)
h_s = physical stack height (m).
σ_{ze} = vertical dispersion parameter incorporating buoyancy induced dispersion (m)

The values of u and $\Delta\Theta/\Delta z$ are based on assumed conditions of stability class F and stack height wind speed of 2.5 m/s for the stable layer above the inversion. The value of h_i incorporates the effect of buoyancy induced dispersion on σ_z, however, elevated terrain effects are ignored. The equation above is solved by iteration, starting from an initial guess of x_{max} = 5,000m.

The maximum ground-level concentration due to inversion break-up fumigation, X_f, is calculated from Equation 5.2 of Turner (1970).

$$X_f = Q/[(2\pi)^{0.5}u(\sigma_{ye}+h_e/8)(h_e+2\sigma_{ze})] \quad (14)$$

where Q is the emission rate (g/s), and other terms are defined above. The dispersion parameters, σ_{ye} and σ_{ze}, incorporate the effects of buoyancy induced dispersion. If the distance to the maximum fumigation is less than 2000m, then SCREEN sets $X_f = 0$ since for such short distances the fumigation concentration is not likely to exceed the unstable/limited mixing concentration estimated by the simple terrain screening procedure.

3.7.2 Shoreline Fumigation

For rural sources within 3000m of a large body of water, maximum shoreline fumigation concentrations can be estimated by SCREEN. A stable onshore flow is assumed with stability class F ($\Delta\Theta/\Delta z$ = 0.035 K/m) and stack height wind speed of 2.5 m/s. Similar to the inversion break-up fumigation case, the maximum ground-level shoreline fumigation concentration is assumed to occur where the top of the stable plume intersects the top of the well-mixed thermal internal boundary layer (TIBL).

An evaluation of coastal fumigation models (EPA, 1987b) has shown that the TIBL height as a function of distance inland is well-represented in rural areas with relatively flat terrain by an equation of the form:

$$h_T = A\,[x]^{0.5} \quad (15)$$

where: h_T = height of the TIBL (m)
A = TIBL factor containing physics needed for TIBL parameterization (including heat flux) ($m^{1/2}$)
x = inland distance from shoreline (m).

Studies (e.g. Misra and Onlock, 1982) have shown that the TIBL factor, A, ranges from about 2 to 6. For screening purposes, A is conservatively set equal to 6, since this will minimize the distance to plume/TIBL intersection, and therefore tend to maximize the concentration estimate.

As with the inversion break-up case, the distance to maximum ground-level concentration is determined by iteration. The equation used for the shoreline fumigation case is:

$$x_{max} = [(h_e + 2\sigma_{ze})/6]^2 - x_s \quad (16)$$

where:
x_{max} = downwind distance to maximum concentration (m)
x_s = shortest distance from source to shoreline (m)
h_e = plume centerline height (m)
σ_{ze} = vertical dispersion parameter incorporating buoyancy induced dispersion (m)

Plume height is based on the assumed F stability and 2.5 m/s wind

speed, and the dispersion parameter (σ_{ze}) incorporates the effects of buoyancy induced dispersion. If x_{max} is less than 200m, then no shoreline fumigation calculation is made, since the plume may still be influenced by transitional rise and its interaction with the TIBL is more difficult to model.

The maximum ground-level concentration due to shoreline fumigation, X_f, is also calculated from Turner's (1970) Equation 5.2:

$$X_f = Q/[(2\pi)^{0.5}u(\sigma_{ye}+h_e/8)(h_e+2\sigma_{ze})] \qquad (14)$$

with σ_{ye} and σ_{ze} incorporating the effects of buoyancy induced dispersion.

Even though the calculation of x_{max} above accounts for the distance from the source to the shoreline in x_s, extra caution should be used in interpreting results as the value of x_s increases. The use of A=6 in Equations 15 and 16 may not be conservative in these cases since there will be an increased chance that the plume will be calculated as being below the TIBL height, and therefore no fumigation concentration estimated. Whereas a smaller value of A could put the plume above the TIBL with a potentially high fumigation concentration. Also, this screening procedure considers only TIBLs that begin formation at the shoreline, and neglects TIBLs that begin to form offshore.

3.8 Complex Terrain 24-hour Screen

The SCREEN model also contains the option to calculate maximum 24-hour concentrations for terrain elevations above stack height. A final plume height and distance to final rise are calculated based on the VALLEY model screening technique (Burt, 1977) assuming conditions of F stability (E for urban) and a stack height wind speed of 2.5 m/s. Stack tip downwash is incorporated in the plume rise calculation.

The user then inputs a terrain height and a distance (m) for the nearest terrain feature likely to experience plume impaction, taking into account complex terrain closer than the distance to final rise. If the plume height is at or below the terrain height for the distance entered, then SCREEN will make a 24-hour average concentration estimate using the VALLEY screening technique. If the terrain is above stack height but below plume centerline height, then SCREEN will make a VALLEY 24-hour estimate (assuming F or E and 2.5 m/s), and also estimate the maximum concentration across a full range of meteorological conditions using simple terrain procedures with terrain "chopped off" at physical stack height, and select the higher estimate. Calculations continue until a terrain height of zero is entered. For the VALLEY model concentration SCREEN will calculate a sector-averaged ground-level concentration with the plume centerline height (h_e) as the larger of 10.0m or the difference between plume height and terrain

height. The equation used is

$$X = \frac{2.032\ Q}{\sigma_{ze}\ u\ x} \exp\ [-0.5(h_e/\sigma_{ze})^2]. \qquad (17)$$

Note that for screening purposes, concentrations are not attenuated for terrain heights above plume height. The dispersion parameter, σ_{ze}, incorporates the effects of buoyancy induced dispersion (BID). For the simple terrain calculation SCREEN examines concentrations for the full range of meteorological conditions and selects the highest ground level concentration. Plume heights are reduced by the chopped off terrain height for the simple terrain calculation. To adjust the concentrations to 24-hour averages, the VALLEY screening value is multiplied by 0.25, as done in the VALLEY model, and the simple terrain value is multiplied by the 0.4 factor used in Step 5 of Section 4.2.

3.9 Non-regulatory Options

3.9.1 Brode 2 Mixing Height Option

The Brode 2 Mixing Height (Brode, 1991) option calculates a mixing height that is calculated based on the calculated plume height, the anemometer height wind speed and a stability-dependent factor which is compared to a stability-dependent minimum mixing height. The algorithm is expressed as:

$$ZI = MAX\ (ZI_{min},\ HE*(1.0 + ZI_{fact} * U_{10})$$

where ZI_{min} is 300m for A, 100m for B, and 30m for both C and D stabilities, and ZI_{fact} is 0.01 for A, 0.02 for B, 0.03 for C, and 0.04 for D stability. Brode found that the results of using this algorithm appear to provide a fairly consistent level of conservatism relative to the ISCST model.

3.9.2 Variable Anemometer Height Option

The anemometer height is used in adjusting the wind speed to stack height wind speed for cavity calculations based on the following power law function:

```
U0 = U0TEN*(AMAX1(10,HS)/ZREF)**0.20
U1 = U1TEN*(AMAX1(10,HS)/ZREF)**0.20
```

where: U0TEN - initial wind speed value set to 20 m/s.
U1TEN - initial wind speed value set to 1 m/s.
HS - stack height
ZREF - anemometer height

U0TEN is adjusted downward in speed and U1TEN is adjusted upward in speed in an iterative process until the minimum wind speed, UC, that will entrain the plume into a building's cavity is found. The critical wind speed is then adjusted to the anemometer height, using the reverse of the power law above, as follows:

```
UC10M = UC * (ZREF/AMAX1(10,HS))**0.20
```

where: UC10M - represents the critical wind speed at anemometer height, ZREF.

The variables HANE and ZREF are used interchangeably.

3.9.3 Schulman-Scire Building Downwash/Cavity Option

A non-regulatory building downwash/cavity algorithm (Schulman and Scire,1993) has been added as a non-regulatory option. This option is based on the diffusing plume approach with fractional capture of the plume by the near-wake recirculation cavity.

Extensive parameterization is used to define a building length scale, roof recirculation cavity, maximum height of the roof cavity, and the length of the downwind recirculation cavity (as measured from the lee face of the building).

A building length scale for flow and diffusion is defined as:

$$R = BS \exp(2/3) * BL \exp(1/3)$$

where: BS is the smaller of the building height and projected width for the minimum side orientation
BL is the larger of the building height and projected width for the maximum side orientation.

The length of the roof recirculation cavity is estimated as:

$$LC = 0.9 * R$$

The roof cavity will reattach to the roof if LC < L where L is the downwind length of the roof.

The maximum height of the roof cavity is defined as:

$$HC = 0.22 * R \quad \text{at } x = 0.5 * R$$

where x is the downwind distance.

The program uses two algorithms to determine the height and width of the downwind recirculation cavity or near-wake. If the roof cavity reattaches to the roof, the height and width are:

HR = H where H is the building height

WR = W where W is the projected width normal to the wind.

If the roof cavity does not reattach, the height and width are:

HR = H + HC
WR = 0.6 * H + 1.1*W

and measured from the lee face of the building.

The length of the recirculation region is calculated using the formula:

$$LR = 1.8W/[(L/H)^{0.3} * (1.0 + 0.24W/H)]$$

with the restriction that L/H is set equal to 0.3 if L/H < 0.3, and L/H is set equal to 3.0 if L/H > 3.0.

The ground level concentration in the recirculation region is calculated assuming the mass fraction of the plume, below HR at the downwind end of the region, is captured into the region. The calculation assumes a Gaussian distribution of the vertical mass of the plume at that point using the following formula:

$$\sigma_z = 0.21R^{0.25} x^{0.75}$$

The cavity concentration, C, is then calculated as a fraction of the plume content using the following empirical formula:

$$C = f_c * B_0 Q/(B_0 w_0 A_0 + u_H s^2)$$

where: f_c is the mass fraction of the plume captured in the recirculation region
B_0 is an empirical constant approximately equal to 16
w_0 is the stack exit speed
A_0 is the stack exit face area
u_H is the upwind wind speed at roof level
s^2 is the "stretched string" distance between the stack base and the receptor.

The position of the stack on the roof is taken into consideration. A ratio is calculated based on the distance of the stack from a centerline of the building perpendicular to the wind flow for each of two orientations divided by the along wind flow length of the building. Below is an example where the along wind flow length is HW and the distance of the stack from the centerline is "x"; producing a ratio of .4. Note that the ratio is always a positive number. Ratios greater than .5 indicate that the stack is not on the roof.

```
v------------ HW --------------v
+--------------.---------------+
```

```
                                  .                    |
(x/HW = .4)-->  |   S             .                    |        HL
                |   ^-----x-----^                      |
                                  .                    |
                +-----------------.-------------------+
               .5                 0                   .5
```

```
                                HL
                        +-------.-------+
                        |       .       |
(x/HL = .15)--->        |       . S     |
                        |       .       |
                        |       .       |        HW
                        |       .       |
                        |       .       |
                        |       .       |
                        +-------.-------+
                       .5       0       .5
```

4. NOTE TO PROGRAMMERS

The SCREEN model executable provided on SCRAM was compiled using the Microsoft FORTRAN Compiler, Version 5.1. It was compiled with the emulator library, meaning that the executable file (SCREEN3.EXE) will run with or without a math coprocessor chip. A minimum of 256 KB of RAM is required to execute the model. Provided in a compressed file on SCRAM are the executable file, SCREEN3.EXE; the FORTRAN source code files, SCREEN3A.FOR, SCREEN3B.FOR, SCREEN3C.FOR, MAIN.INC, and DEPVAR.INC; a sample input file, EXAMPLE.DAT; an associated output file, EXAMPLE.OUT; and this document, the SCREEN3 Model User's Guide (in WordPerfect 5.1 format), SCREEN3R.WPF. Also included is a READ.ME file with instructions on extracting SCREEN.

The SCREEN model provided was compiled with the following Microsoft FORTRAN compile command:

```
FL /FPi /Gt /FeSCREEN3.EXE SCREEN3A.FOR SCREEN3B.FOR SCREEN3C.FOR
```

where the /FPi compile option specifies the emulator library and causes floating point operations to be processed using in-line instructions rather than library CALLs (used for faster execution), the /Gt option specifies the data threshold for storing data in a new segment, and the /FeSCREEN3.EXE option specifies the name of the executable file. SCREEN3 uses the FORTRAN default unit number of 5 (five) for reading input from the keyboard and 6 (six) for writing to the screen. The unit number for the disk output file, SCREEN.OUT, is set internally to 9, and the unit number for writing inputs to the data file, SCREEN.DAT, is set to 7. These unit numbers are assigned to the variables IRD, IPRT, IOUT, and IDAT, respectively, and are initialized in BLOCK DATA at the end of the SCREEN3.FOR source file. The Microsoft version of SCREEN also uses the GETDAT and GETTIM system routines for retrieving the date and time. These routines require the variables to be INTEGER*2, and they may differ on other compilers.

The following simple change can be made to the SCREEN source file, SCREEN3A.FOR, in order to create a version that will accept a user-specified output filename, instead of automatically writing to the file SCREEN.OUT. An ASCII text editor or a wordprocessor that has an ASCII or nondocument mode may be used to edit the source file. Delete the letter C from Column 1 on lines 262 to 265. They should read as follows:

```
      WRITE(IPRT,*) ' '
94    WRITE(IPRT,*) 'ENTER NAME FOR OUTPUT FILE'
      READ(IRD,95) OUTFIL
95    FORMAT(A12)
```

With this change, if the user-specified filename already exists, it will be overwritten. If desired, the OPEN statement on line 267 may also be changed to read as follows:

```
OPEN(IOUT,FILE=OUTFIL,STATUS='NEW',ERR=94)
```

With this additional change, the program will continue to prompt for the input filename until a filename that doesn't already exist is entered by the user. Before recompiling, make any other changes that may be necessary for the particular compiler being used. It should be noted that without optimization, the source file may be too large to compile as a single unit. In this case, the SCREEN3A.FOR and SCREEN3B.FOR files may need to be split up into separate modules that can be compiled separately and then linked together.

The SCREEN model code has also been successfully compiled with the Lahey F77/EM-32 Fortran compiler, with the following compile commands:

```
F77L3 SCREEN3A.FOR /NO /NW /D1LAHEY
F77L3 SCREEN3B.FOR /NO /NW
```

where the /NO option suppresses the printing of compile options, /NW suppresses certain warning messages, and /D1LAHEY defines LAHEY for implementing the conditional compile block of Lahey-specific statements for retrieving the system date and time for the output file. Follow the instructions with the Lahey compiler for linking the model to create an executable file.

5. REFERENCES

Auer, Jr., A.H., 1978. Correlation of Land Use and Cover with Meteorological Anomalies. Journal of Applied Meteorology, 17(5): 636-643.

Briggs, G.A., 1969. Plume Rise. USAEC Critical Review Series, TID-25075, National Technical Information Service, Springfield, Virginia 22151.

Briggs, G.A., 1973. Diffusion Estimation for Small Emissions. NOAA ATDL, Contribution File No. 79 (Draft). Oak Ridge, TN.

Briggs, G.A., 1975. Plume Rise Predictions. In: Lectures on Air Pollution and Environmental Impact Analysis, Haugen, D.A. (ed.), American Meteorological Society, Boston, MA, pp. 59-111.

Brode, R.W., 1991. A Comparison of SCREEN Model Dispersion Estimates with Estimates From a Refined Dispersion Model. Seventh Joint Conference on Applications of Air Pollution Meteorology with A&WMA., 93-96.

Burt, E.W., 1977. Valley Model User's Guide. EPA-450/2-77-018. U.S. Environmental Protection Agency, Research Triangle Park, NC.

Environmental Protection Agency, 1977. Guidelines for Air Quality Maintenance Planning and Analysis, Volume 10 (Revised): Procedures for Evaluating Air Quality Impact of New Stationary Sources. EPA-450/4-77-001 (OAQPS Number 1.2-029R), Research Triangle Park, NC.

Environmental Protection Agency, 1983. Regional Workshops on Air Quality Modeling: A Summary Report - Addendum. EPA-450/4-82-015. U.S. Environmental Protection Agency, Research Triangle Park, NC.

Environmental Protection Agency, 1987a. Guideline On Air Quality Models (Revised) and Supplement A. EPA-450/2-78-027R. U.S. Environmental Protection Agency, Research Triangle Park, NC.

Environmental Protection Agency, 1987b. Analysis and Evaluation of Statistical Coastal Fumigation Models. EPA-450/4-87-002. U.S. Environmental Protection Agency, Research Triangle Park, NC.

Environmental Protection Agency, 1988. Screening Procedures for Estimating the Air Quality Impact of Stationary Sources - Draft for Public Comment. EPA-450/4-88-010. U.S. Environmental Protection Agency, Research Triangle Park, NC.

Environmental Protection Agency, 1995a: Screening Procedures for Estimating the Air Quality Impact of Stationary Sources, Revised. EPA-450/R-92-019. U.S. Environmental Protection Agency, Research Triangle Park, NC.

Environmental Protection Agency, 1995b. Industrial Source Complex (ISC3) Dispersion Model User's Guide. EPA-454/B-95-003b. U.S. Environmental Protection Agency, Research Triangle Park, NC.

Hosker, R.P., 1984. Flow and Diffusion Near Obstacles. In: Atmospheric Science and Power Production. Randerson, D. (ed.), DOE/TIC-27601, U.S. Department of Energy, Washington, D.C.

Leahey, D.M. and M.J.E. Davies, 1984. Observations of Plume Rise from Sour Gas Flares. Atmospheric Environment, 18, 917-922.

Misra, P.K. and S. Onlock, 1982. Modelling Continuous Fumigation of Nanticoke Generating Station Plume. Atmospheric Environment, 16, 479-482.

Pierce, T.E., D.B. Turner, J.A. Catalano, and F.V. Hale, 1982. PTPLU - A Single Source Gaussian Dispersion Algorithm User's Guide. EPA-600/8-82-014. U.S. Environmental Protection Agency, Research Triangle Park, NC.

Pierce, T.E., 1986. Addendum to PTPLU - A Single Source Gaussian Dispersion Algorithm. EPA/600/8-86-042. U.S. Environmental Protection Agency, Research Triangle Park, NC. (Available only from NTIS. NTIS Accession Number PB87-145 363.)

Pierce, T.E. and D.B. Turner, 1980. User's Guide for MPTER - A Multiple Point Gaussian Dispersion Algorithm With Optional Terrain Adjustment. EPA-600/8-80-016. U.S. Environmental Protection Agency, Research Triangle Park, NC.

Randerson, D., 1984. Atmospheric Boundary Layer. In: Atmospheric Science and Power Production. Randerson, D. (ed.), DOE/TIC-27601, U.S. Department of Energy, Washington, D.C.

Schulman,L.L. and Scire, J.S., 1993. Building Downwash Screening Modeling for the Downwind Recirculation Cavity. Air and Waste., August, 1122-1127.

Turner, D. B., 1964. A Diffusion Model for an Urban Area. Journal of Applied Meteorology, 3, 83-91.

Turner, D.B., 1970. Workbook of Atmospheric Dispersion Estimates. Revised, Sixth printing, Jan. 1973. Office of Air Programs Publication No. AP-26.