8/30/2006

# WESTINGHOUSE ELECTRIC COMPANY LLC
# NUCLEAR FUEL

## APPLICATION FOR APPROVAL OF PACKAGING OF FISSILE RADIOACTIVE MATERIAL (MCC SHIPPING CONTAINERS)

## PACKAGE IDENTIFICATION NUMBER USA/9239/AF

**Revision 12**
**August 2006**

**U.S. NUCLEAR REGULATORY COMMISSION**
**DOCKET 71-9239**

Information in this record was deleted
in accordance with the Freedom of Information
Act, exemptions 4
2007-213

P-H

## TABLE OF CONTENTS


TABLE OF CONTENTS ..... iii
RECORD OF REVISIONS ..... vii
LIST OF EFFECTIVE PAGES ..... ix

CHAPTER 1: GENERAL INFORMATION ..... 1-1
1.1 INTRODUCTION ..... 1-1
1.2 PACKAGE DESCRIPTION ..... 1-1

APPENDIX 1-1 REFERENCES ..... A1-1-1
APPENDIX 1-2 CONTAINER EQUIPMENT SPECIFICATIONS ..... A1-2-1
APPENDIX 1-3 CONTAINER DRAWINGS ..... A1-3-1
APPENDIX 1-4 RADIONUCLIDE QUANTITIES ..... A1-4-1
APPENDIX 1-5 FUEL ASSEMBLY PARAMETERS ..... A1-5-1
APPENDIX 1-6 ASSEMBLY NEUTRON ABSORBER SPECIFICATIONS ..... A1-6-1
APPENDIX 1-7 $Gd_2O_3$ NEUTRON ABSORBER PLATES SPECIFICATIONS ..... A1-7-1
APPENDIX 1-8 DESIGN COMPARISON OF THE MCC-5 PACKAGE TO THE MCC-4 PACKAGE ..... A1-8-1

CHAPTER 2: STRUCTURAL EVALUATION ..... 2-1
2.1 STRUCTURAL DESIGN ..... 2-1
2.2 WEIGHTS AND CENTERS OF GRAVITY ..... 2-1
2.3 MECHANICAL PROPERTIES OF MATERIALS ..... 2-1
2.4 GENERAL STANDARDS FOR ALL PACKAGES ..... 2-2
2.5 STANDARD FOR TYPE B AND LARGE QUANTITY PACKAGING ..... 2-2
2.6 NORMAL CONDITIONS OF TRANSPORT ..... 2-2
2.7 HYPOTHETICAL ACCIDENT CONDITIONS ..... 2-4
2.8 SPECIAL FORM ..... 2-7
2.9 FUEL RODS ..... 2-7

APPENDIX 2-1 REFERENCES ..... A2-1-1
APPENDIX 2-2 CONTAINER WEIGHTS AND CENTERS OF GRAVITY ..... A2-2-1
APPENDIX 2-3 CONTAINER LOAD SUSPENSION SYSTEM ..... A2-3-1
APPENDIX 2-4 CALCULATIONS AND EVALUATIONS RELATING TO ASSESSMENT OF NORMAL CONDITIONS OF TRANSPORT ..... A2-4-1
APPENDIX 2-5 CALCULATIONS AND EVALUATIONS RELATING TO ASSESSMENT OF HYPOTHETICAL ACCIDENT CONDITIONS ..... A2-5-1
APPENDIX 2-5.1 CALCULATIONS ..... A2-5.1-1
APPENDIX 2-5.2 EVALUATION OF DROP ANGLE ..... A2-5.2-1

TABLE OF CONTENTS (cont.)


| | | | |
|---|---|---|---|
| | APPENDIX 2-5.3 | EVALUATION OF TEST RESULTS | A2-5.3-1 |
| | APPENDIX 2-5.4 | CLAMPING FRAME COMPRESSION TEST RESULTS | A2-5.4-1 |
| | APPENDIX 2-5.5 | MCC-3/MCC-4 BOUNDING CASE ASSESSMENT | A2-5.5-1 |
| | APPENDIX 2-6 | STRUCTURAL CALCULATIONS AND EVALUATIONS RELATING TO THE ASSESSMENT FOR TRANSPORTATION OF VVER 1000 FUEL | A2-6.5-1 |
| CHAPTER 3: | THERMAL EVALUATION | | 3-1 |
| CHAPTER 4: | CONTAINMENT | | 4-1 |
| 4.1 | CONTAINMENT BOUNDARY | | 4-1 |
| 4.2 | REQUIREMENTS FOR NORMAL CONDITIONS OFTRANSPORT | | 4-1 |
| 4.3 | CONTAINMENT REQUIREMENTS FOR THE HYPOTHETICAL ACCIDENT CONDITION | | 4-1 |
| CHAPTER 5: | SHIELDING EVALUATION | | 5-1 |
| CHAPTER 6: | CRITICALITY EVALUATION | | 6-1 |
| 6.1 | DISCUSSION AND RESULTS | | 6-1 |
| 6.2 | PACKAGE FUEL LOADING | | 6-3 |
| 6.3 | MODEL SPECIFICATION | | 6-3 |
| 6.4 | CRITICALITY CALCULATION | | 6-14 |
| 6.5 | CRITICAL BENCHMARK EXPERIMENTS | | 6-16 |
| | APPENDIX 6-1 | REFERENCES | A6-1-1 |
| | APPENDIX 6-2 | EVALUATION OF THE NUCLEAR CRITICALITY SAFETY OF UNPACKAGED FUEL ASSEMBLIES | A6-2-1 |
| | APPENDIX 6-3 | EVALUATION OF THE NUCLEAR CRITICALITY SAFETY OF PACKAGED FUEL ASSEMBLIES | A6-3-1 |
| CHAPTER 7: | ROUTINE SHIPPING CONTAINER UTILIZATION SUMMARY OPERATING PROCEDURES | | 7-1 |
| 7.1 | RECEIVE FUEL ASSEMBLY SHIPPING CONTAINER | | 7-1 |
| 7.2 | CLEAN SHIPPING CONTAINER | | 7-1 |
| 7.3 | REFURBISH SHIPPING CONTAINER | | 7-1 |
| 7.4 | PREPARE CONTAINER FOR FUEL ASSEMBLY LOADING | | 7-1 |
| 7.5 | INSPECTION | | 7-2 |

TABLE OF CONTENTS (cont.)


| | | |
|---|---|---|
| 7.6 | FUEL ASSEMBLY LOADING | 7-2 |
| 7.7 | INSPECTION | 7-4 |
| 7.8 | CLOSE SHIPPING CONTAINER | 7-4 |
| 7.9 | INSPECTION | 7-4 |
| 7.10 | TRUCK LOADING OF SHIPPING CONTAINERS | 7-4 |
| 7.11 | REGULATORY | 7-5 |
| 7.12 | INSPECTION | 7-5 |
| CHAPTER 8: | ACCEPTANCE TESTS, MAINTENANCE PROGRAM AND RECERTIFICATION PROGRAM | 8-1 |
| 8.1 | ACCEPTANCE TESTS | 8-1 |
| 8.2 | MAINTENANCE PROGRAM | 8-1 |
| 8.3 | RECERTIFICATION PROGRAM | 8-1 |

## RECORD OF REVISIONS

| Rev. No. | Date | Description of Revision |
|---|---|---|
| 0 | January 1991 | Original application. |
| 1 – 9 | October 1991 through December 2000 | October 1996 – In accordance with 10 CFR 71.38, Renewal of certificate of compliance or quality assurance program approval, Westinghouse Electric Company files an application for renewal of existing Certificate of Compliance number 9239. A consolidated application is submitted that incorporates all changes previously incorporated by reference in existing approvals or certificate. There are no changes to the application for package approval that are not authorized in the existing certificate or other approvals. |
| 10 | October 2001 | In accordance with 10 CFR 71.38, Renewal of certificate of compliance or quality assurance program approval, Westinghouse Electric Company files an application for renewal of existing Certificate of Compliance number 9239. A consolidated application is submitted that incorporates all changes previously incorporated by reference in existing approvals or certificate. There are no changes to the application for package approval that are not authorized in the existing certificate or other approvals.<br><br>All pages are marked as Revision 10 instead of the recommended practice to mark revised portion of each page using a "change indicator" consisting of a bold vertical line drawn in the margin opposite the binding margin. |
| 11 | January 2006 | Amended contents to allow shipments of 17x17 STANDARD lattice fuel assemblies (17x17 STD and 17X17XL) with U-235 enrichments up to 4.85 wt% in packaging without horizontal $Gd_2O_3$ neutron absorber plates positioned underneath each assembly. Other fuel assembly types require horizontal $Gd_2O_3$ neutron absorber plates for enrichments greater than 4.65 wt%. |
| 12 | August 2006 | In accordance with 10 CFR 71.38, Renewal of certificate of compliance or quality assurance program approval, Westinghouse Electric Company files an application for renewal of existing Certificate of Compliance number 9239. A consolidated application is submitted that incorporates all changes previously incorporated by reference in existing approvals or certificate. There are no changes to the application for package approval that are not authorized in the existing certificate or other approvals.<br><br>Page numbers have changed due to reformatting the style and composition, but no significant changes to the content of the application have been made. All pages are marked as Revision 12 instead of the recommended practice to mark revised portion of each page using a "change indicator" consisting of a bold vertical line drawn in the margin opposite the binding margin. |

## LIST OF EFFECTIVE PAGES

| Effective Pages | Page Numbers |
|---|---|
| Revision 12 | Front Cover (Reverse Blank) |
| Revision 12 | iii (Reverse Blank) to x |
| Revision 12 | 1-1 to 1-3 (Reverse Blank) |
| Revision 12 | A1-1-1 (Reverse Blank) to A1-1-3 (Reverse Blank) |
| Revision 12 | A1-2-1 (Reverse Blank) to A1-2-5 (Reverse Blank) |
| Revision 12 | A1-3-1 (Reverse Blank) to A1-3-3 (Reverse Blank) |
| Revision 12 | 20 Sheets of 11x17 Drawings |
| Revision 12 | A1-4-1 (Reverse Blank) to A1-4-5 (Reverse Blank) |
| Revision 12 | A1-5-1 (Reverse Blank) to A1-5-8 |
| Revision 12 | A1-6-1 (Reverse Blank) to A1-6-21 (Reverse Blank) |
| Revision 12 | A1-7-1 (Reverse Blank) to A1-7-10 |
| Revision 12 | A1-8-1 (Reverse Blank) to A1-8-4 |
| Revision 12 | 2-1 to 2-7 (Reverse Blank) |
| Revision 12 | A2-1-1 (Reverse Blank) to A2-1-3 (Reverse Blank) |
| Revision 12 | A2-2-1 (Reverse Blank) to A2-2-4 |
| Revision 12 | A2-3-1 (Reverse Blank) to A2-3-12 |
| Revision 12 | A2-4-1 (Reverse Blank) to A2-4-10 |
| Revision 12 | A2-5-1 (Reverse Blank) |
| Revision 12 | A2-5.1-1 (Reverse Blank) to A2-5.1-29 (Reverse Blank) |
| Revision 12 | A2-5.2-1 (Reverse Blank) to A2-5.2-4 |
| Revision 12 | A2-5.3-1 (Reverse Blank) to A2-5.3-34 |
| Revision 12 | A2-5.4-1 (Reverse Blank) to A2-5.4-5 (Reverse Blank) |
| Revision 12 | A2-5.5-1 (Reverse Blank) to A2-5.5-7 (Reverse Blank) |
| Revision 12 | A2-6-1 (Reverse Blank) to A2-6-37 (Reverse Blank) |
| Revision 12 | 3-1 (Reverse Blank) |
| Revision 12 | A3-1-1 (Reverse Blank) to A3-1-3 (Reverse Blank) |
| Revision 12 | 4-1 (Reverse Blank) |
| Revision 12 | A4-1-1 (Reverse Blank) to A4-1-3 (Reverse Blank) |
| Revision 12 | 5-1 (Reverse Blank) |
| Revision 12 | A5-1-1 (Reverse Blank) to A5-1-3 (Reverse Blank) |
| Revision 12 | 6-1 to 6-21 (Reverse Blank) |
| Revision 12 | A6-1-1 (Reverse Blank) to A6-1-3 (Reverse Blank) |
| Revision 12 | A6-2-1 (Reverse Blank) to A6-2-15 (Reverse Blank) |
| Revision 12 | A6-3-1 (Reverse Blank) to A6-3-134 |

## LIST OF EFFECTIVE PAGES (cont.)

| Effective Pages | Page Numbers |
|---|---|
| Revision 12 | 7-1 to 7-5 (Reverse Blank) |
| Revision 12 | A7-1-1 (Reverse Blank) to A7-1-3 (Reverse Blank) |
| Revision 12 | 8-1 to 8-2 |
| Revision 12 | A8-1-1 (Reverse Blank) to A8-1-3 (Reverse Blank) |

# CHAPTER 1: GENERAL INFORMATION

## 1.1 INTRODUCTION

The Modified Core Component [MCC(-#)] package is to be used for transporting up to two low-enriched uranium fuel assemblies for light water power reactor cores. The nominal number of packages per shipment is to be six. The package classification is to be Fissile Class I.

## 1.2 PACKAGE DESCRIPTION

### 1.2.1 Packaging

#### 1.2.1.1 MCC-3 Container

Designation – MCC-3 Shipping Container.
Gross Weight – 7544 pounds.
Fabrication – The design and fabrication details for MCC-3 series shipping containers are given in Equipment Specification Addendum E-MCC-676498 and Westinghouse drawing MCCL301; which are included in Appendices 1-2 and 1-3, respectively to this application.
Coolants – Not applicable.

##### 1.2.1.1.1 MCC-4 Container

Designation – MCC-4 Shipping Container.
Gross Weight – 10,533 pounds.
Fabrication – The design and fabrication details for MCC-4 series shipping containers are given in Equipment Specification Addendum E-MCC-953511 and Westinghouse drawing MCCL401; which are included in Appendices 1-2 and 1-3, respectively to this application.
Coolants – Not applicable.

#### 1.2.1.2 MCC-5 Container

Designation – MCC-5 Shipping Container.
Gross Weight – 10,533 pounds.
Fabrication – The design and fabrication details for MCC-5 series shipping containers are given in Equipment Specification Addendum E-MCC-953511 and Westinghouse drawing MCCL501; which are included in Appendices 1-2 and 1-3, respectively to this application.
Coolants – Not applicable.

### 1.2.2 Operational Features

Not applicable.

### 1.2.3 Contents of Packaging

#### 1.2.3.1 MCC-3 Container – Contents Description

Identification and Enrichment of Special Nuclear Material (SNM) – The SNM will be unirradiated uranium enriched up to 5 w/o in the isotope U-235. Nominal weight-percent quantities of principal radionuclides, at maximum enrichment, are – $^{234}U$: 0.044; $^{235}U$: 5.000; $^{236}U$: 0.004; $^{238}U$: 94.952. Radionuclide quantity details are included in Appendix 1-4 to this application.

Form of SNM – The SNM will be in the form of clad fuel assemblies. In the clad form, the assemblies will not disruptively react or decompose at the Accident Thermal Condition. No chips, powders, or solutions will be offered for transport in this packaging. Specific data on maximum assembly parameters are included in Appendix 1-5 to this application.

Neutron Absorbers, etc. – For fuel assemblies containing enrichments greater than the limiting enrichment dictated by the limiting reactivity value, integral assembly neutron absorbers may be included as necessary to meet the limit. Specific information concerning such absorbers is included in Appendix 1-6 to this application. Neutron absorber plates, consisting of carbon steel, with $Gd_2O_3$ affixed to each side of the plate, are mounted in the packaging. Two permanently mounted plates are installed such that they are between the contained fuel assemblies. Additional such plates may be installed beneath the contained fuel assemblies, as required to meet the limiting reactivity value. The installation is such that the presence of the neutron absorber plates may be readily detected by visual examination. Specific information concerning the $Gd_2O_3$ neutron absorber plates is included in Appendix 1-7 to this application.

- Maximum Weight of Fissile Contents – 51.2 Kg $^{235}U$.
- Maximum Net Weight of Contents – 3300 pounds.
- Maximum Decay Heat – Not applicable.

The contents will be loaded in such a fashion that if the package were to be flooded and subsequently drained, any water which may have penetrated the contents would drain simultaneously.

#### 1.2.3.2 MCC-4 Container – Contents Description

The contents description for the MCC-3 container is directly applicable to the MCC-4 container, except as follows:

- Maximum Weight of Fissile Content – 59.7 Kg $^{235}U$.
- Maximum Net Weight of Contents – 3870 pounds.

#### 1.2.3.3 MCC-5 Container – Contents Description

The contents description for the MCC-3 container is directly applicable to the MCC-5 container, except as follows:

There are $Gd_2O_3$ neutron absorber plates which are permanently installed in the MCC-5 container: the two, previously described, which are installed between the two assemblies; and segmented plates which

are installed under the strongback. Additional vee-shaped plates may be installed beneath the contained fuel assemblies as required to meet the limiting reactivity value.

- Maximum Weight of Fissile Content – 52 Kg $^{235}U$.
- Maximum Net Weight of Contents – 3700 pounds.

The MCC-5 package is essentially identical in design and size as the MCC-4 package, but with several minor notable differences. The significance of these minor differences is addressed in Sections 6 and 7, and Appendices 1-2, 1-3, 2-2, 2-6, 6-2, and 6-3. A specific list of the minor differences is provided in Appendix 1-8, Design Comparison of the MCC-5 Package to the MCC-4 Package.

# APPENDIX 1-1
# REFERENCES

## REFERENCES

No documents referenced in the text of this section.

# APPENDIX 1-2
# CONTAINER EQUIPMENT SPECIFICATIONS

## EQUIPMENT SPECIFICATION ADDENDUM

## E-MCC-676498

MCC-3 shipping containers differ from Specification E-676498 containers in the design of the clamping frame assemblies that secure the contained fuel assemblies within the package internals. The MCC-3 clamping frame assemblies include the following modified features:

- SNUBBERS have been incorporated into the grid pressure pad systems, to limit displacement of contained fuel assemblies in event of severe shipping container impact conditions.
- The ductility of the grid pad SWING BOLTS have been increased, such that they will plastically deform and dissipate energy in event of severe shipping container impact conditions.
- The CLAMPING FRAMES have been designed with increased strength, to prevent yielding in event of severe shipping container impact conditions.

These MCC-3 parts are shown in detail in the following:

| PART NAME | DRAWING MCCL301 ITEM NO. |
|---|---|
| SNUBBER | 22, 24, 25 |
| SWING BOLT | 15 |
| CLAMPING FRAME | 13 |

## EQUIPMENT SPECIFICATION ADDENDUM

## E-MCC-953511

MCC-4 shipping containers differ from Specification E-953511 containers in the design of the clamping frame assemblies that secure the contained fuel assemblies within the package internals. The MCC-4 clamping frame assemblies include the following modified features:

- SNUBBERS have been incorporated into the grid pressure pad systems, to limit displacement of contained fuel assemblies in event of severe shipping container impact conditions.
- The ductility of the grid pad SWING BOLTS have been increased, such that they will plastically deform and dissipate energy in event of severe shipping container impact conditions.
- The CLAMPING FRAMES have been designed with increased strength, to prevent yielding in event of severe shipping container impact conditions.

These MCC-4 parts are shown in detail in the following:

| PART NAME | DRAWING MCCL401 ITEM NO. |
|---|---|
| SNUBBER | 42, 43, 44 |
| SWING BOLT | 35 |
| CLAMPING FRAME | 33 |

## EQUIPMENT SPECIFICATION ADDENDUM

## E-MCC-953511

MCC-5 shipping containers differ from Specification E-953511 containers in the design of the clamping frame assemblies that secure the contained fuel assemblies within the package internals. The MCC-5 clamping frame assemblies include the following modified features:

- SNUBBERS have been incorporated into the grid pressure pad systems, to limit displacement of contained fuel assemblies in event of severe shipping container impact conditions.
- The ductility of the grid pad SWING BOLTS have been increased, such that they will plastically deform and dissipate energy in event of severe shipping container impact conditions.
- The CLAMPING FRAMES have been designed with increased strength, to prevent yielding in event of severe shipping container impact conditions.

These MCC-5 parts are shown in detail in the following:

| PART NAME | DRAWING MCCL501 ITEM NO. |
|---|---|
| SNUBBER | 42, 43, 44, & 46 |
| SWING BOLT | 35 |
| CLAMPING FRAME | 33 |

# APPENDIX 1-3
# CONTAINER DRAWINGS

## LIST OF LICENSE DRAWINGS

SAFETY RELATED ITEMS MCC-3 SHIPPING CONTAINER

| | |
|---|---|
| MCCL301, | SHEET 01 OF 04 |
| | SHEET 02 OF 04 |
| | SHEET 03 OF 04 |
| | SHEET 04 OF 04 |

SAFETY RELATED ITEMS MCC-4 SHIPPING CONTAINER

| | |
|---|---|
| MCCL401, | SHEET 01 OF 05 |
| | SHEET 02 OF 05 |
| | SHEET 03 OF 05 |
| | SHEET 04 OF 05 |
| | SHEET 05 OF 05 |

SAFETY RELATED ITEMS MCC-5 SHIPPING CONTAINER

| | |
|---|---|
| MCCL501, | SHEET 01 OF 10 |
| | SHEET 02 OF 10 |
| | SHEET 03 OF 10 |
| | SHEET 04 OF 10 |
| | SHEET 05 OF 10 |
| | SHEET 06 OF 10 |
| | SHEET 07 OF 10 |
| | SHEET 08 OF 10 |
| | SHEET 09 OF 10 |
| | SHEET 10 OF 10 |

FUEL ASSEMBLY CROSS SECTIONAL VIEWS

# APPENDIX 1-4
# RADIONUCLIDE QUANTITIES

## RADIONUCLIDE QUANTITIES

Figure 1-4-1 provides a five year history of Uranium isotopic measurements at the Columbia Fuel Fabrication Facility. The isotopes of interest in this figure are $^{234}U$ and $^{236}U$. Only these two isotopes are plotted since $^{235}U$ and $^{238}U$ are relatively fixed. The $^{234}U$ levels have been constant over the five year period while $^{236}U$ levels have varied significantly. The variance in $^{236}U$ levels is of little concern due to its low specific activity. However, $^{234}U$ levels are expected to be consistent since it is present in natural uranium and is therefore enriched along with $^{235}U$. The isotope $^{234}U$ accounts for 70-80 percent of the specific activity of low enriched uranium. Data for 1990 indicate a $^{234}U$ average of 8700 ug/g$^{235}U$ and a $^{236}U$ average of 750 ug/g$^{235}U$.

Figure 1-4-2 is constructed using the average values given above to calculate the specific activity of uranium at various enrichments. The specific activity is calculated by multiplying the isotopic concentration by its specific activity. The basic equation used in these calculations is presented in Figure 1-4-2. The predicted specific activity at 5.0 wt% $^{235}U$ enrichment is 2.8 uCi/gU. This calculated value is conservative with respect to published values.

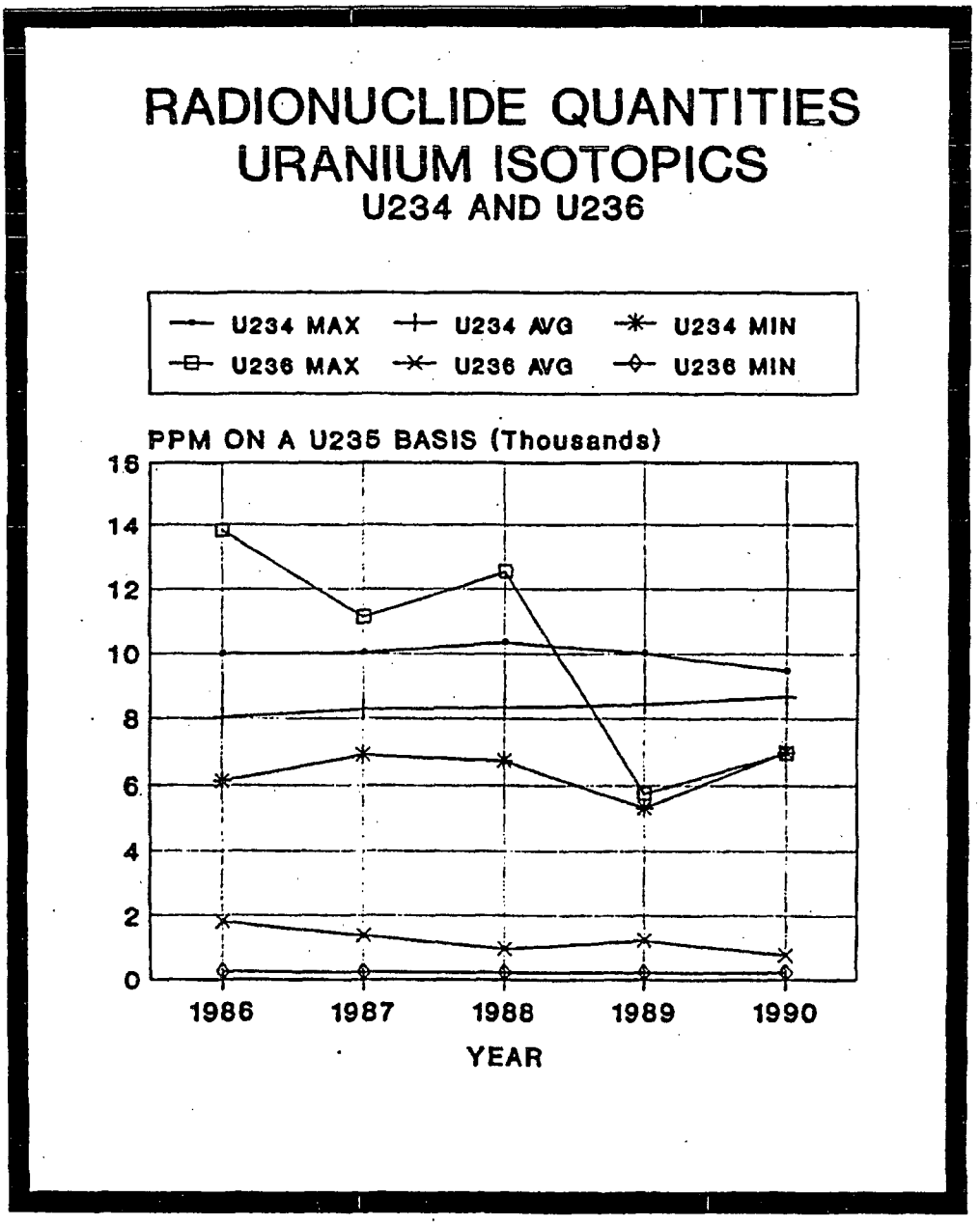
RADIONUCLIDE QUANTITIES
URANIUM ISOTOPICS
U234 AND U236
U234 MAX
U234 AVG
U234 MIN
U236 MAX
U236 AVG
U236 MIN
PPM ON A U235 BASIS (Thousands)
16
14
12
10
8
6
4
2
0
1986
1987
1988
1989
1990
YEAR

Figure 1-4-1

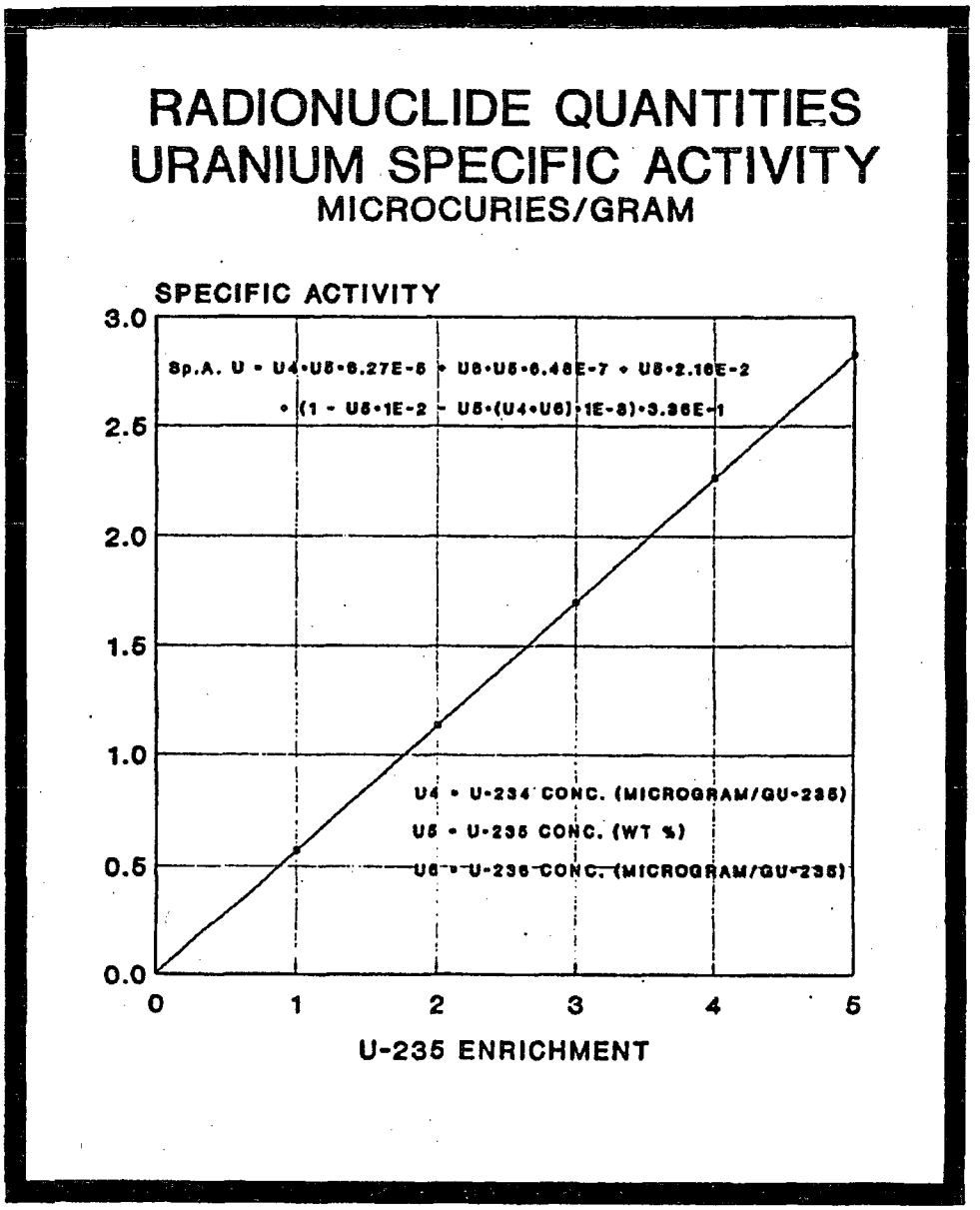
RADIONUCLIDE QUANTITIES
URANIUM SPECIFIC ACTIVITY
MICROCURIES/GRAM
SPECIFIC ACTIVITY
Sp.A. U = U4*U5*6.27E-5 + U6*U5*6.48E-7 + U5*2.16E-2
+ (1 - U5*1E-2 - U5*(U4+U6)*1E-3)*3.36E-1
U4 = U-234 CONC. (MICROGRAM/GU-235)
U5 = U-235 CONC. (WT %)
U6 = U-236 CONC. (MICROGRAM/GU-235)
3.0
2.5
2.0
1.5
1.0
0.5
0.0
0
1
2
3
4
5
U-235 ENRICHMENT

Figure 1-4-2

# APPENDIX 1-5
# FUEL ASSEMBLY PARAMETERS

## FUEL ASSEMBLY PARAMETERS

The attached tables are the fuel assembly parameters for 14X14, 15X15, 16X16, 17X17, and VVER-1000 fuel types to be transported in the MCC fuel shipping container. The parameters indicated are used in the Criticality Analysis section to support uncontained and contained fuel assembly calculations. All parameters are used in the criticality analysis section except for the fuel stack length which is assumed to be infinite except in the 3D calculations performed for square lattice fuel involving IFBA and all VVER-1000 fuel assemblies in containers. Assembly reactivities are provided to indicate the highest reactivity fuel (17X17 W-OFA) to be used in the HAC model for the criticality calculations. The tabulated reactivity values assume an enrichment of 5 wt%, moderation by water to the most reactive credible extent, and close reflection by water on all sides. Fuel assembly cross-sectional views are provided on Westinghouse Drawing 6481E15, Sheet 1 of 1. The assemblies are identified by design origin with location identified for all fuel rods, instrument tubes (IT), and guide tubes (GT or thimbles). The instrument tube is a single tube centrally located and surrounded by the guide tubes.

| Table 1-5-1 Fuel Assembly Parameters 14X14 Type Fuel Assembly | | | | | | |
|---|---|---|---|---|---|---|
| **Fuel Assembly Description** | **14X14** | **14X14** | **14X14** | **14X14** | **14X14** | **14X14** |
| Fuel Assembly Type | W-STD | 422 V+ | W-OFA | CE-1 | CE-2 | W-SS |
| Nominal Pellet Diameter | 0.3659 | 0.3659 | 0.3444 | 0.3765 | 0.3805 | 0.3835 |
| Annular Pellet Inner Diameter | N/A | 0.183 | 0.172 | N/A | N/A | N/A |
| Nominal Clad Thickness | 0.0243 | 0.0243 | 0.0243 | 0.0280 | 0.0260 | 0.0165 |
| Clad Material | ZIRC | ZIRLO | ZIRC | ZIRC | ZIRC | SS-304 |
| Nominal Clad Outer Diameter | 0.4220 | 0.4220 | 0.4000 | 0.4400 | 0.4400 | 0.4220 |
| GT Diameter | 0.5390 | 0.5260 | 0.5260 | 1.1110 | 1.1110 | 0.5355 |
| GT Thickness | 0.0170 | 0.0170 | 0.0170 | 0.0380 | 0.0380 | 0.0120 |
| GT Material | ZIRC | ZIRLO | ZIRC | ZIRC | ZIRC | SS-304 |
| IT Diameter | 0.4220 | 0.4220 | 0.3990 | 1.1110 | 1.1110 | 0.5355 |
| IT Thickness | 0.0240 | 0.0240 | 0.0235 | 0.0380 | 0.0380 | 0.0120 |
| IT Material | ZIRC | ZIRLO | ZIRC | ZIRC | ZIRC | SS-304 |
| Maximum Stack Length | 145 | 145 | 145 | 145 | 145 | 145 |
| Nominal Assembly Envelope | 7.756 | 7.751 | 7.756 | 8.110 | 8.110 | 7.756 |
| Kg's $^{235}U$/ Assembly | 21 | 21 | 19 | 22 | 23 | 23 |
| Nominal Lattice Pitch | 0.5560 | 0.5560 | 0.5560 | 0.5800 | 0.5800 | 0.5560 |
| Assembly $K_\infty$ | 0.9124 | 0.9134 | 0.9359 | 0.9296 | 0.9350 | 0.8859 |

Notes:

1. Fuel assembly parameters identified on Westinghouse Drawing 6481E15.
2. Non-specified dimensions are units of inches.
3. Nominal 8.0-inch annular pellet zones are at top and bottom of fuel rod.

| Table 1-5-2 Fuel Assembly Parameters 15X15 Type Fuel Assembly | | | |
|---|---|---|---|
| **Fuel Assembly Description** | **15X15** | **15X15** | **15X15** |
| Fuel Assembly Type | W-STD | W-OFA | B&W |
| Nominal Pellet Diameter | 0.3659 | 0.3659 | 0.3659 |
| Annular Pellet Inner Diameter | 0.183 | 0.183 | 0.183 |
| Nominal Clad Thickness | 0.0243 | 0.0243 | 0.0243 |
| Clad Material | ZIRC | ZIRC | ZIRC |
| Nominal Clad Outer Diameter | 0.4220 | 0.4220 | 0.4220 |
| GT Diameter | 0.5460 | 0.5330 | 0.5330 |
| GT Thickness | 0.0170 | 0.0170 | 0.0170 |
| GT Material | ZIRC | ZIRC | ZIRC |
| IT Diameter | 0.5460 | 0.5330 | 0.5300 |
| IT Thickness | 0.0170 | 0.0170 | 0.0450 |
| IT Material | ZIRC | ZIRC | ZIRC |
| Maximum Stack Length | 145 | 145 | 145 |
| Nominal Assembly Envelope | 8.418 | 8.418 | 8.528 |
| Kg's $^{235}$/U Assembly | 24 | 24 | 24 |
| Nominal Lattice Pitch | 0.5630 | 0.5630 | 0.5680 |
| Assembly $K_\infty$ | 0.9632 | 0.9615 | 0.9599 |

Notes:

1. Fuel assembly parameters identified on Westinghouse Drawing 6481E15.
2. Non-specified dimensions are units of inches.
3. Nominal 8.0-inch annular pellet zones are at top and bottom of fuel rod.

| Table 1-5-3 Fuel Assembly Parameters 16X16 Type Fuel Assembly | | |
|---|---|---|
| **Fuel Assembly Description** | **16X16** | **16X16** |
| Fuel Assembly Type | W-STD | CE |
| Nominal Pellet Diameter | 0.3225 | 0.3250 |
| Annular Pellet Inner Diameter | 0.155 | N/A |
| Nominal Clad Thickness | 0.0225 | 0.0250 |
| Clad Material | ZIRC | ZIRC |
| Nominal Clad Outer Diameter | 0.3740 | 0.3820 |
| GT Diameter | 0.4710 | 0.9800 |
| GT Thickness | 0.0180 | 0.0400 |
| GT Material | ZIRC | ZIRC |
| IT Diameter | 0.4710 | 0.9800 |
| IT Thickness | 0.0180 | 0.0400 |
| IT Material | ZIRC | ZIRC |
| Maximum Stack Length | 145 | 151 |
| Nominal Assembly Envelope | 7.763 | 8.122 |
| Kg's $^{235}U$ Assembly | 22 | 23 |
| Nominal Lattice Pitch | 0.4850 | 0.5060 |
| Assembly $K_\infty$ | 0.9055 | 0.9302 |

Notes:

1. Fuel assembly parameters identified on Westinghouse Drawing 6481E15.
2. 16X16 CE Fuel Design to be shipped only in MCC-4.
3. Non-specified dimensions are units of inches.
4. Nominal 8.0-inch annular pellet zones are at top and bottom of fuel rod.

| Table 1-5-4 Fuel Assembly Parameters 17X17 Type Fuel Assembly | | | | | | | |
|---|---|---|---|---|---|---|---|
| **Fuel Assembly Description** | **17X17** | | | **17X17** | | | **17X17** |
| Fuel Assembly Type | W-STD[5] | | | W-STD/XL[5] | | | W-OFA[4] |
| Nominal Pellet Diameter | 0.3225 | | | 0.3225 | | | 0.3088 |
| Annular Pellet Inner Diameter | 0.155 | | | 0.155 | | | 0.155 |
| Nominal Clad Thickness | 0.0225 | | | 0.0225 | | | 0.0225 |
| Clad Material | ZIRC | | | ZIRC | | | ZIRC |
| Nominal Clad Outer Diameter | 0.3740 | | | 0.3740 | | | 0.3600 |
| Maximum Stack Length | 145 | | | 169 | | | 145 |
| Nominal Assembly Envelope | 8.418 | | | 8.418 | | | 8.418 |
| Kg's $^{235}U$ Assembly | 24 | | | 28 | | | 22 |
| Nominal Lattice Pitch | 0.4960 | | | 0.4960 | | | 0.4960 |
| | GT1 | GT2 | GT3 | GT1 | GT2 | GT3 | |
| GT Diameter | 0.4820 | 0.4820 | 0.4740 | 0.4820 | 0.4820 | 0.4740 | 0.4740 |
| GT Thickness | 0.0160 | 0.0200 | 0.0160 | 0.0160 | 0.0200 | 0.0160 | 0.0160 |
| GT Material | ZIRC | ZIRC | ZIRC | ZIRC | ZIRC | ZIRC | ZIRC |
| IT Diameter | 0.4820 | 0.4820 | 0.4740 | 0.4820 | 0.4820 | 0.4740 | 0.4740 |
| IT Thickness | 0.0160 | 0.0200 | 0.0160 | 0.0160 | 0.0200 | 0.0160 | 0.0160 |
| IT Material | ZIRC | ZIRC | ZIRC | ZIRC | ZIRC | ZIRC | ZIRC |
| Assembly $K_\infty$ | 0.9541 | 0.9530 | 0.9536 | 0.9541 | 0.9530 | 0.9536 | 0.9644 |

Notes:

1. Fuel assembly parameters identified on Westinghouse Drawing 6481E15.
2. 17X17 XL Fuel Design to be shipped only in MCC-4.
3. Non-specified dimensions are units of inches.
4. Nominal 8.0-inch annular pellet zones are at top and bottom of fuel rod.
5. Nominal 10.25-inch annular pellet zones at top and bottom of 17x17 STD/XL

| Table 1-5-5 Fuel Assembly Parameters VVER-1000 Type Fuel Assembly | |
|---|---|
| **Fuel Assembly Description** | **VVER-1000** |
| Nominal Pellet Diameter | 0.3088 |
| Annular Pellet Inner Diameter | 0.1550 |
| Nominal Clad Thickness | 0.0225 |
| Clad Material | ZIRC |
| Nominal Clad Outer Diameter | 0.3600 |
| GT Diameter | 0.4740 |
| GT Thickness | 0.0160 |
| GT Material | ZIRC |
| IT Diameter | 0.4740 |
| IT Thickness | 0.0160 |
| IT Material | ZIRC |
| Maximum Stack Length | 144 |
| Kg $^{235}U$ Assembly | 26 |
| Nominal Lattice Pitch | 0.5020 |
| Assembly $K_\infty$ | 0.9432 |

Notes:

1. Fuel assembly parameters identified on Westinghouse Drawing 6481E15.
2. VVER-1000 fuel design to be shipped only in MCC-5 containers.
3. Non-specified dimensions are units of inches.
4. VVER-1000 fuel assembly with annular pellet zone 10 inches top and bottom.

# APPENDIX 1-6
# ASSEMBLY NEUTRON ABSORBER SPECIFICATIONS

# ASSEMBLY NEUTRON ABSORBER SPECIFICATIONS

## 1.1 INTEGRAL FUEL BURNABLE NEUTRON ABSORBERS (IFBA)

### INTRODUCTION

In the Hypothetical Accident Condition (HAC) test of Integral Fuel Burnable Absorber rods, a conclusion was drawn that indicated the $ZrB_2$ maintained its relative design configuration. Therefore, two (2) undamaged fuel assemblies – having $ZrB_2$ coated pellets intact within zircaloy fuel rod cladding – in the relative MCC container design configuration, were modeled for the Nuclear Safety Analysis.

### DESIGN

A zirconium diboride ($ZrB_2$) coating is deposited onto the cylindrical portion of a uranium dioxide ($UO_2$) pellet by a sputtering system. This coating process is conducted in a cryogenicly pumped vacuum chamber housing a rotating drum. The coating process is conducted at a temperature range of 1300-1470°F for twelve (12) hours. Planar Magnetron cathodes mounted both within and outside of the rotating drum permit coating of the cylindrical surface of the $UO_2$ pellets nearly all around, simultaneously.

Each batch of pellets produced is identified as a specific coater lot. Extensive testing of each coater lot is necessary from a quality standpoint to ensure that the $ZrB_2$ has adhered to the pellet.

### INTEGRITY

In order to demonstrate that the effectiveness of the $ZrB_2$ coating will not be reduced under the Hypothetical Accident Conditions (HAC) prescribed in 10CFR71, a drop test, thermal test, and water immersion test were conducted using two simulated fuel rods.

The test consisted of dropping the fuel rods from a height of 30 feet onto a flat, horizontal, essentially unyielding surface; heating rods to a temperature of 1475°F followed by water quenching; and immersion in water for at least 8 hours.

The test specimens consisted of 18.5 inch long fuel rods containing a (nominally) six (6) inch long stack of $ZrB_2$ coated fuel pellets and a 4.2 inch long uncoated fuel pellet stack in a (nominally) 0.360 inch diameter tube. A nominal plenum length of 7.525 inches with a standard 4G helical spring was used to simulate the hold down. The test rods were pressurized with helium to 200 psig, the standard pressure for IFBA rods.

Coated fuel stacks were weighed prior to rod fabrication. After welding, the rods were helium leak tested and the girth and seal welds were ultrasonically inspected to assure the integrity of the welds. The pellet stacks were x-rayed, and the coated zone location was determined by active gamma scanning. Figure 1-6-1 illustrates the test rod configuration. Average boron loading on pellets was analytically determined using coated pellets from the same lot as those used in the test rods.

The drop test consisted of dropping one test rod on the bottom (pellet) end, and a second rod on the holddown spring end, from a height of 30 feet onto a half (1/2) inch thick steel plate that rested on a concrete floor. After the drop test, both rods were helium leak tested to confirm that the rod integrity was not lost. Subsequently, the test rods were placed in a muffle furnace preheated to 1475°F for 30 minutes. Although the average temperature at the center of the furnace was as specified (based on thermocouple indications), the back end of the furnace was 150°F higher. This higher temperature caused the cladding to balloon, which resulted in a creep rupture type failure of the cladding in a 2 inch section. Subsequent water (68°F) immersion for a period of no less than 8 hours resulted in water ingress into the rods. The condition made the test more severe than that specified in 10CFR71 and, therefore, the results are considered to be conservative.

After completion of water immersion, both test rods were x-rayed to determine the condition of the pellet stacks. X-ray inspection showed that the pellet stacks were intact in both the test rods. In the first rod, dropped on the bottom (pellet) end, considerable pellet fragmentation was observed. In the second rod, dropped on the holddown spring end, the coated and uncoated stacks were intact with only a small amount of fragmentation in the uncoated section.

Next, the first rod was gamma scanned to locate the $ZrB_2$ coated pellet zone. Gamma scan results illustrated in Figure 1-6-2 showed that the drop, thermal, and water immersion tests did not affect the $ZrB_2$ coating adherence to the pellets. The coating effectively stayed in position. The differences in the delayed gamma counts before and after the test (Figure 1-6-2) are due to normal equipment and test uncertainties. The second rod could not be properly gamma scanned because of problems encountered in transporting it through the gamma scanner due to its bowed condition.

The test rods were subsequently sectioned to remove the pellet stacks and perform ceramographic examination of the coated pellets. Since the pellet stack in the second rod could be removed intact, the pellets were dried and weighed, and the weight was compared to the pre-test weight. Results are presented in Table 1-6-1. Adherence of the $ZrB_2$ coating to the pellet was determined from ceramography, and analytical measurement of boron on tested and control pellets from the same coater lot. Table 1-6-2 shows a comparison of the measured boron loading on coated pellets from the test rods with that on pellets which had not undergone testing. The test results are within the normal process variability as defined in Table 1-6-3. A similar ceramographic comparison is illustrated in Figure 1-6-3.

The test results conclusively proved that the $ZrB_2$ coating stayed on the pellets, and that the pellet stacks (although fragmented) did not move within the rod, thus demonstrating the effectiveness under the hypothetical accident conditions.

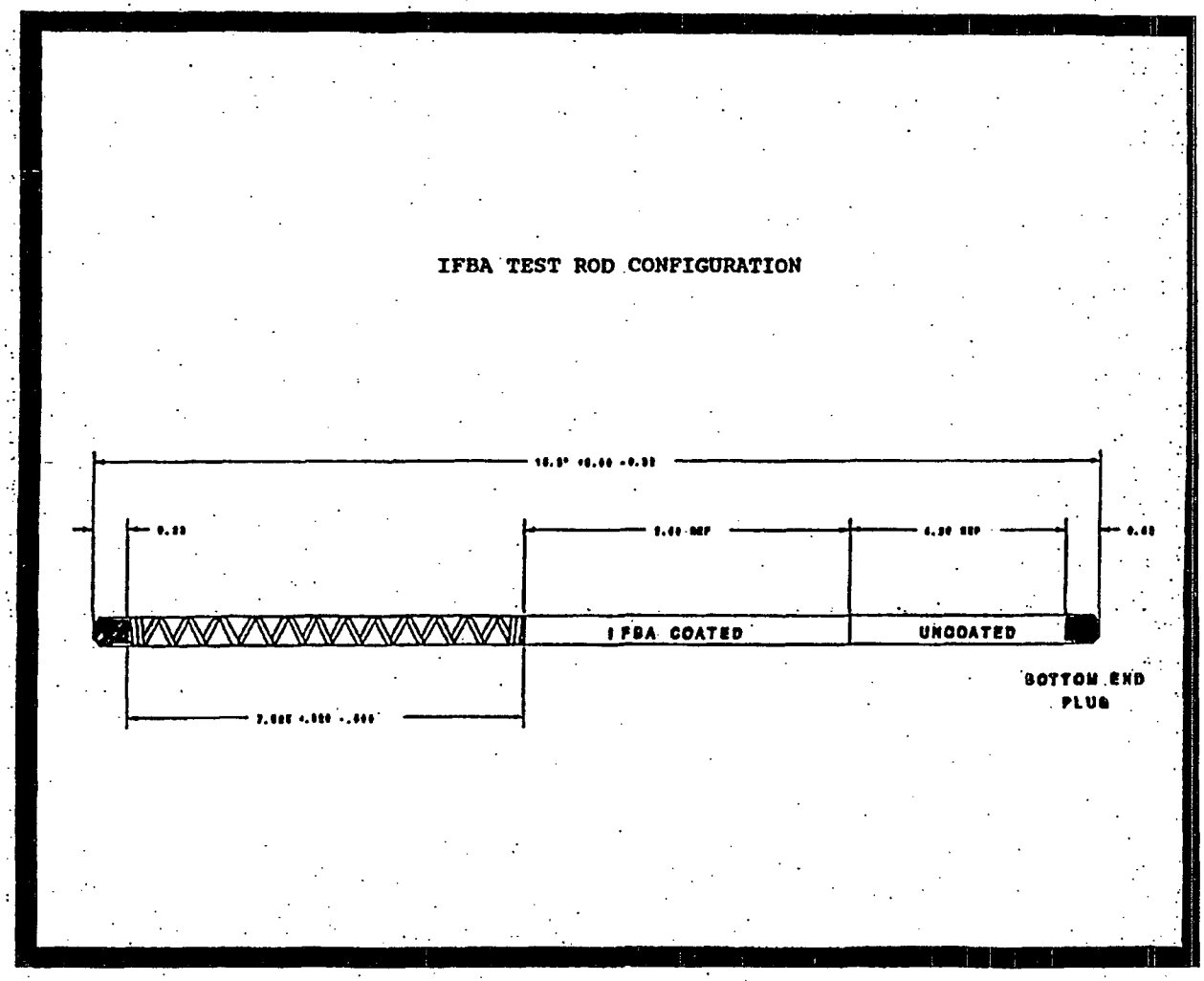
IFBA TEST ROD CONFIGURATION
IFBA COATED
UNCOATED
BOTTOM END
PLUG

Figure 1-6-1

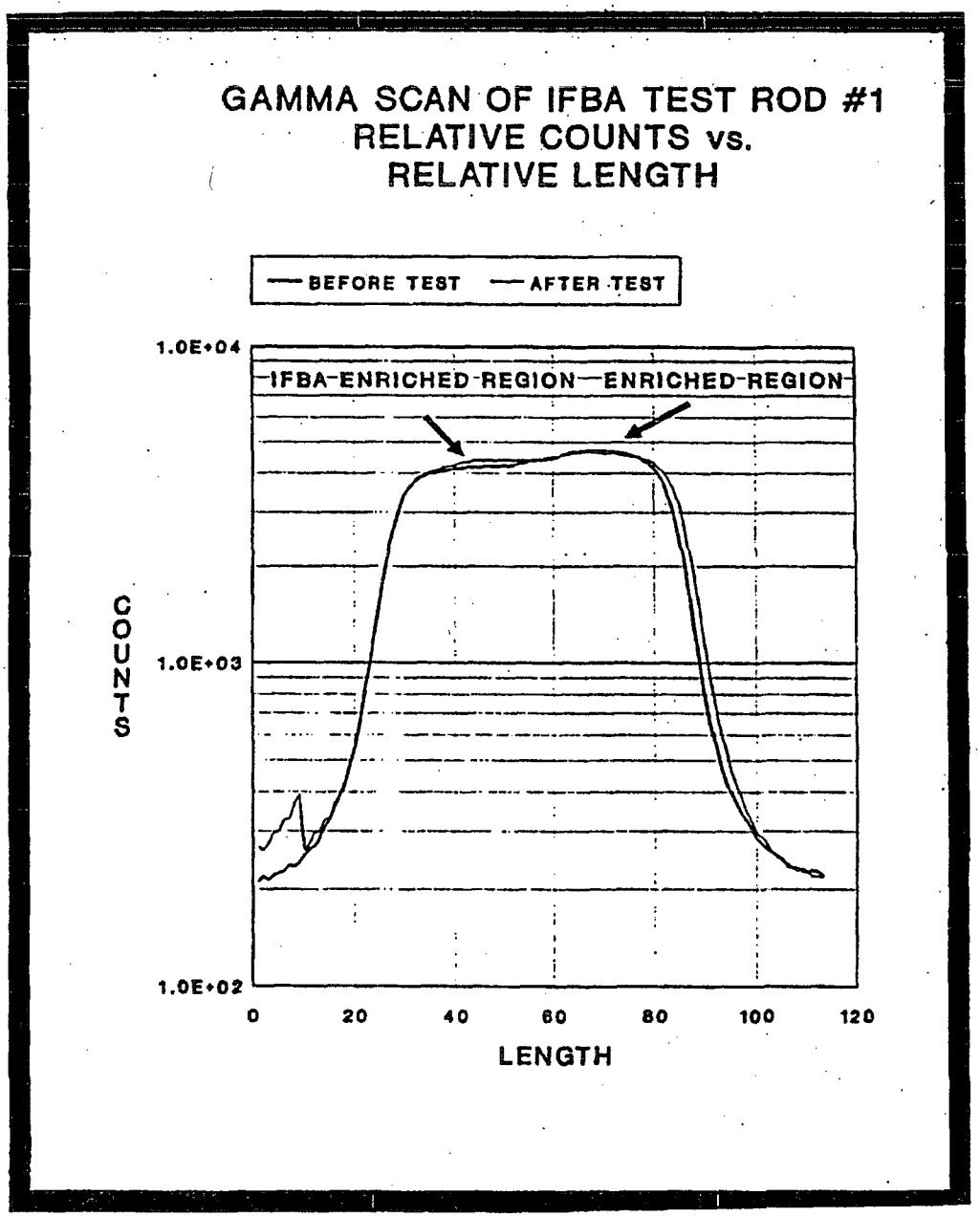
GAMMA SCAN OF IFBA TEST ROD #1
RELATIVE COUNTS vs.
RELATIVE LENGTH
BEFORE TEST
AFTER TEST
IFBA-ENRICHED-REGION
ENRICHED-REGION
1.0E+04
1.0E+03
1.0E+02
COUNTS
0
20
40
60
80
100
120
LENGTH

Figure 1-6-2

| Table 1-6-1 Stack Length and Weight Measurements | | | | |
|---|---|---|---|---|
| | | | Stack Weight, grams | |
| Rod No. | Stack Type | Stack Length, inches | Before | After |
| 1 | coated | 6.203 | 78.8938 | N/A |
| | uncoated | 4.140 | N/A | N/A |
| 2 | coated | 6.179 | 78.5416 | 78.5413 |
| | uncoated | 4.110 | N/A | N/A |

Note:
N/A – Not Measured

| Table 1-6-2 Boron Loading Measurements[1] | | |
|---|---|---|
| Test No | Control Pellets Boron, mg/inch | Tested Pellets Boron, mg/inch |
| 1 | 7.39 ± 0.11 | – |
| 2 | 7.49 ± 0.11 | – |
| 3 | – | 7.04 ± 0.11 |
| 4 | – | 7.43 ± 0.11 |

Note:
1. These values are within the normal process variability defined in Table 1-6-3.

**Table 1-6-3 IFBA Variability (Percent)**

| Item | $\sigma_{SPEC}$[1] | $\sigma_{CE}$[2] | $\sigma_{BE}$[3] | Basis |
|---|---|---|---|---|
| Pellets | 25 | 12 | 12 | These values are on individual pellet weight gain data collected over 3 years and on group pellet chemistry data required as part of the product specification. |
| Strings | – | 10 | 7.0 | Inferred from the pellet distribution. These are conservative values since they assume no mixing during overturn operation or due to the dimension differences between the fixtures and the receiving trays. |
| Coater[4] | 2.5 | 2.5 | 2.0 | Each run is measured with a 96 pellet sample. The expected error of this estimate is 1.2% so the true values will be less than estimated. The best estimate value accounts for mixing to ± 3%. |
| Rods[5] | – | 4.8 | 3.5 | The standard deviations are estimated from the statistical convolution of the variability of the strings and the variability of the coater. Gamma scanner results show that the standard deviation of the rods is less than 5% which includes the large uncertainty of the scanner. |
| Assembly | 1.5 | 1.9 | 1.5 | Assembly variability is measured for each contract. The rod channels are checked before rod loading and, if necessary, rod mixing is used to ensure assemblies meet this criterion. |

Notes:

1. Product specification of the standard deviation.
2. Conservative estimate of the standard deviation.
3. Best estimate of the standard deviation.
4. $(\sigma^2_{string}/6 + \sigma^2_{coater})^{1/2}$
5. $(\sigma^2_{coater}/2 + \sigma^2_{rod}/48)^{1/2}$

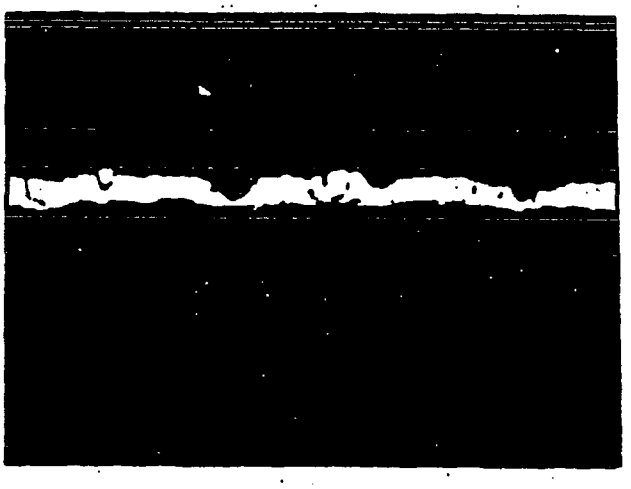

CONTROL PELLET

TEST PELLET

Figure 1-6-3

## NUCLEONICS

IFBA Loading Uncertainty

The pellet coating process produces pellets that vary in the amount of $ZrB_2$ coating deposited. Pellets on the outside of the coating fixture receive less material than the ones on the inside because of shadowing by the fixture supports. Consequently, since there is no attempt to keep track of where the pellets end up, the result is a pseudo pellet variability. The specification calls for the standard deviation of the pellet loading to be less than 25%. Actually, the coaters produce material with a standard deviation of 12%. These values are based on several years worth of measurements of individual pellets by a weight gain technique, and by continuing analyses of each coater run by chemical analysis.

While this pellet variability seems large, it does not result in large variability in either the IFBA rods or in the assemblies containing IFBA. The reason is that there are large numbers of IFBA pellets in each rod (about 300) and still larger numbers in an assembly (greater than 10000). Thus, because of random mixing effects, the variability of rods or assemblies is slight.

Actually, mixing of pellets is not completely random and, consequently, the results of the mixing that does occur is not quite as good as might be expected from the above. For one, the pellets from an individual coater run are not thoroughly mixed so the effective mixing in a rod is decreased. Second, the pellets in a region (coater run to coater run) are not thoroughly mixed so that the assemblies will tend to vary because the coater runs vary.

Table 1-6-4 gives a description of the actual mixing process and conservatively estimates the IFBA rod variability. The result is a standard deviation of 4.8%. Gamma scan measurements of the rods show a standard deviation of 5%. For instance, the gamma scanner estimates the U-235 rod variability to be 2.5%, whereas, from more accurate sources it is known to be less than 1%. The scanner precision is statistical in nature and is therefore driven by the low count rate produced in the activation process.

A more important variability than the rods, is the variability of the assembly loading. This is more important because it affects the overall reactivity of the assembly. The variability of the rods only slightly affects the reactivity of the assembly because the statistical combination of rods with variable loading tends to cancel the effect of high and low rods. (Note this is not true for strong poisons which can only have reduced worth as a result of variability.)

Because assembly worth is important in reactor core design, the amount of boron in each assembly is monitored. Each rod is assumed to have an amount of boron in it based on the coater run or runs it came from. The boron from each of the rods in the assembly is added and compared to the amount the assembly should contain. The standard deviation of the percentage differences between nominal and measured values is calculated to assure it is less than 1.5% as defined in the product specification.

Because of coater run variability, this is a difficult value to meet and would be expected to be exceeded occasionally if steps were not taken to reduce the assembly variability. One step taken is to monitor rods in channels before loading into assemblies. If the variability of the rods between channels is too great, the rods in the channels are mixed to form a more uniform population. Since monitoring channels was begun, no contract has exceeded the 1.5% limit on assembly variability.

**Table 1-6-4 Mixing Mechanisms**

1. When the pellet fixtures from the coater are unloaded, the first operation is to get them onto a receiving tray. This tray is placed upside down on the fixture and the fixture is overturned. There is some mixing of rows in this operation since frequently pellets end up on top of each other or roll to locations different than the one they were in while in the coater.

2. Chipped or other reject pellets are removed at this stage by manufacturing. Filling the vacancies left introduces a slight amount of mixing.

3. Since the fixtures are 17 to 18 rows wide, and the trays they are to be placed on in the pellet cart are 25 rows wide, there has to be considerable rearranging of rows of pellets in this process to get the number of rows to match. This operation is done by hand and in a happenstance manner which is dictated by the state that the person doing the mixing finds the receiving tray after overturning. This state will be different from overturning to overturning.

4. Once the pellets get on the 25 row trays about 150 pellets are removed by Quality Assurance (QA) for sampling. The largest portion (96) of these pellets are used to determine the average coater loading. Others are used to check for hydrogen, coating adherence, etc. QA also removes any pellets that do not meet the visual specification. Again, the vacancies introduced increase mixing slightly.

5. At this stage the pellets are in 20 inch strings on the pellet trays. For ease of analysis, these strings are assumed to have been together in the coater as a continuous string. This is a conservative assumption since the required handling (as described in the steps above) produces considerable mixing. This is the second conservative assumption in the mixing analysis.

   In addition, since these strings are about 20 inches long, they must contain at least one section of pellets from an end of the fixture or a section of pellets from next to one of the vertical support bars. This means that no string can contain only pellets from the middle of the fixture. No string can contain just high loading pellets.

6. The strings of pellets on these trays are then measured for length and loaded onto separate trays by the collator for later loading into rods. Since a typical IFBA stack length is 120 inches and since the trays hold stacks of about 20 inches, it takes about 6 lengths of pellets from 6 different trays to make up one IFBA stack. Since the stacks on the trays are in no particular order with respect to their position in the coater they will be loaded into rods in a pseudo random manner.

7. Assuming the mixing described above (but excluding the important additional mixing during the fixture overturn and tray loading operations), randomly loaded pellet strings that have a standard deviation of about 10%, taken from coater runs that are varying by about 2.5%, produce a rod population that is varying by about 5% in boron content [$(10/\mathrm{sqrt}(6))^2+2.5^2=4.8^2$]. This sum of squares is permissible since the variability of the rods due to the variability of the pellet strings [10/sqrt(6)] is independent of the variability of the rods due to the coater variability of 2.5%. This estimate that the rod variability is less than 5% is conservative for several reasons:

   a. The pellet string variability will be less than 10%. This number assumes no mixing of the pellets during the overturn operation. Since much of the variability of the strings is the result of the low outside rows in the fixtures, any mixing of these pellets will reduce the variability of the strings. Since the pellet variability is about 12%, the 10% pellet string variability assumption is conservative (there are about 50 pellets in a string).

   b. The effective number of strings in a rod will be greater than 6. Since the tray and fixture length and width are different, the strings of pellets on a tray are not likely to be composed of a continuous string of pellets from a fixture. Thus, most pellet strings on the trays will themselves be composed of two or more pellet strings from the fixtures.

   c. The effective coater variability will be less than 2.5%. A coater mixing process was introduced in March of 1989 where any coater run outside ± 3% of nominal is mixed with another coater run so that the average of the two is within ± 3%. The mixing process guarantees that approximately half of the pellets in each rod come from each of the two coater runs. Thus, on a rod basis, the coater runs will effectively vary less than the 2.5% assumed.

8. Assembly variability is measured for each contract. The rod channels are checked before rod loading and, if necessary, rod mixing is used to ensure all assemblies meet the specification limit of 1.5%.

Another step taken to reduce assembly variability is coater mixing. At the present time coater runs are mixed if they are more than 3% from the contract nominal. They are mixed with another run so that the combined run is within ± 3%. Credit for this is not taken because the specification does not require it. This is an in-house method of ensuring that the 1.5% assembly variability specification is met.

All of these factors which go into making up the assembly boron loading variability are given in Table 1-6-4. This table shows the specification requirements on IFBA variability, a conservative estimate of these variabilities, and a best estimate value for the variabilities. The bases for the estimates is also given.

The assembly variability is the pertinent result for criticality work. This variability is a specification quantity and is measured on each contract to be below 1.5%. The boron content in the IFBA rods has been reduced by 5% in analysis of the shipping container. This is conservative for two reasons. First, the 5% value is much larger than the 1.5% limit times the one sided 95/95 uncertainty factor. Second, this is included as a bias by reducing the number of $^{10}B$ atoms in the assembly. If it were to be included as a variability (which it is) instead of as a bias, its resulting effect would be smaller because of statistical convolution with other variable factors of equal or larger magnitude.

Number densities calculated for $^{10}B$ concentration given above are further reduced 25% to provide an additional safety margin.

Axial Reflector Modeling

Westinghouse models shipping containers as infinite in length because this is convenient and slightly conservative (since credit for axial leakage is ignored). However, since part-length poisons are to be used, a full 3D model is needed rather than constructing a more conservative infinite model.

Table 1-6-5 shows the composition of the material between the fuel stacks. The values in this table assume that two assembly bottoms are lined up, even though assemblies always ride front to back on the truck. This is a considerable conservatism because it excludes the 7 inch plenum region (3 inch, if spring compression is assumed) from separating the two fuel stacks.

Table 1-6-5 defines a 5.08 inch distance from the fuel stack to the center line between two fuel stacks, or a 10.16 inch axial spacing between fuel stacks. This is essentially an infinite distance between fuel stacks. This is conservative since the plenum space is excluded.

## QUALITY ASSURANCE

IFBA Pellet $ZrB_2$ Adherence

IFBA pellets are coated with zirconium diboride, $ZrB_2$, using a Westinghouse patented and qualified sputtering process. This high temperature, high vacuum process applies a dense, mechanically adherent $ZrB_2$ coating to 17000 to 20000 pellets at a time during one coating cycle. The coating is applied to a nominal thickness of 0.0004 inch as the pellets are rotated while held in a coating fixture bounded with wire.

| Table 1-6-5 Structure Between Axial Fuel Stacks | | |
|---|---|---|
| **Region** | **Length, inches** | **Composition** |
| Fuel Stack | 0.0 | |
| End Plug | 0.43 | 30% Zr 70% $H_2O$ |
| Bottom Nozzle | 2.4 | 20% SS 80% $H_2O$ |
| Container End Plate | 0.75 | 100% SS |
| Container Structure | 1.5 | 10% SS 90% $H_2O$ |
| Center Line | 5.08 | |

When the timed coating cycle is complete, all coated pellets are unloaded and placed on trays for visual inspection and sampling. A trained and qualified inspector performs a 100% visual inspection, discarding all pellets with chips, cracks, discoloration, and other questionable surface anomalies. Sample pellets are randomly selected for boron chemical analysis (mg $^{10}B$/inch), coating adherence tests (thermal cycle/peel test), metallographic $ZrB_2/UO_2$ interface evaluation, and chemical impurities.

The amount of boron present on the coated pellets is determined by a qualified analytical procedure involving removal of the $ZrB_2$ coating by pyrohydrolysis and boron measurement by titration. Residual boron is determined by emission spectrometry to assure that all boron is removed from the pellets. A NIST No. SRM 951 boric acid standard is used to standardize the titrant. Control standards are analyzed to verify boron recovery through the pyrohydrolysis system. This procedure is performed on 12 groups of eight pellets each for every coating lot of pellets. The average milligrams of boron measured on the 12 groups is multiplied by the percent $^{10}B$ in Boron as determined by $ZrB_2$ powder mass spectrographic analyses of supplier and Westinghouse overcheck samples. The result is milligrams $^{10}B$, which is divided by the total length of the 96 pellet sample to achieve milligrams $^{10}B$ per inch.

Adherence testing is performed on a sample of 10 pellets per coating lot. This test takes the form of 10 thermal cycles followed by a tape peel test. This test is performed to assure that the coating adheres to the $UO_2$. The sample of 10 pellets is cycled from room temperature to 600 EC ten times to simulate start-up and shut down of reactor operation. The cycled pellets are then weighed and peel tested by applying and removing tape to the pellet circumference. The tape itself must pass an adherence test for stickiness or gripping ability before it is used. After the peel test, pellets are reweighed and disposition is made by determining the amount of coating removed. Less than 0.0008 grams at a 95% confidence limit is the specification. No coating lot has ever failed an adherence test.

A pellet sample from each coating lot is analyzed by emission spectroscopy for metallic impurities. Carbon, nitrogen, and fluorine are also analyzed by other analytical techniques. These analyses are performed to assure that the $ZrB_2$ coating contains no detrimental impurities. The same analyses were performed on the $UO_2$ pellets prior to coating as a condition of their release.

IFBA Pellet Location In Fuel Rod

The next precaution taken to assure that $ZrB_2$ coated pellets are present in the fuel is computerized, robotic stack collation. For each rod design, (three zone – natural/coated/natural, or five zone – natural/enriched/coated/enriched/natural) a software program is loaded into a process control computer at the pellet collation station. This program instructs a pair of robots. The robots are located inside a ring of pellet tray carts which contain the necessary pellet types to fabricate the desired rod design. At the computer's command one robot picks up the appropriate tray of pellets (25 rows) and positions it so that the other robot may measure and remove the correct lengths of pellets. The tray handling robot then puts the tray back and proceeds to place another tray in position for pellet length measurements and removal. This process is repeated until 25 measured, and correctly zoned, pellet stacks are located on special capture row trays for continued processing. It is important to note that there is no way for pellets to escape from the capture row trays once they are loaded.

After IFBA pellets are loaded into tubes, the resultant rods are pressurized, seal welded, and inspected by passive gamma scanning. The purpose of this inspection is to verify that correct uranium enrichment is present, and that no deviant uranium enrichment pellets are mixed in with the stack.

The final inspection to assure that $ZrB_2$ pellets are present as desired is a neutron activated gamma scan of the finished rods. This calibrated procedure is performed on 100% of all rods fabricated at Columbia. This inspection has the capability of discriminating a single coated pellet which may be mixed into an uncoated pellet zone. Each rod containing coated pellets is inspected for correct zone lengths (natural, enriched, or coated) and plenum length. The active gamma scanner inspection is done by activating the uranium with neutrons as the rod passes by a Californium source. The resultant gamma activity is measured for each zone and compared with standard rod activity levels recorded in a process control computer.

IFBA Rod Location In Fuel Assembly

Boron bearing rods are known as Integral Fuel Burnable Absorber (IFBA) rods. There are four separate actions which assure that IFBA rods are in their correct positions within a fuel assembly.

The first step in assuring correct IFBA rod position in the assembly is in loading the magazine. The magazine is a fixture used to stage rods prior to assembly loading. Templates are placed over the end of the magazine which will only permit rods to be loaded into certain positions within the magazine. Templates have been prepared and are selected according to the drawing number of the particular assembly being loaded. The assembly drawing number specifies the particular pattern of IFBA type rods to be used in the assembly. After loading IFBA type rods into the magazine, the template is removed and the standard rods are inserted into the remaining positions in the magazine.

The second step in assuring correct IFBA rod position in the assembly is in the inspection of the loaded magazine. The IFBA rods each have an identifying mark on the top end plug. Quality control (QC) Inspection verifies that the IFBA rods and the standard rods are in their correct positions based on a visual inspection of the top end plugs in the magazine.

The third step in assuring correct rod position in the assembly is the entry of assembly-rod data into the Rod Accountability and Monitoring (RAMS) real-time computer system. The system is pre-loaded with a list of the correct assembly id's for that region, and the correct rod loading pattern for the assemblies. Unique rod identifications are scanned into the RAMS real-time system using barcode reader devices. The computer system records the correct pattern of standard and IFBA rods for each assembly. It recognizes the rod type scanned and compares the location for that rod with acceptable locations for rods of that type. If the rod is in an acceptable location, the transaction accepts; if not, the transaction is rejected and the operator is instructed to check the pattern and make corrections if necessary. If any alterations to the rods loaded in the magazine are required, the corrected magazine is reinspected.

The fourth step in assuring correct rod position in the fuel assembly occurs when the data collected by the real-time computer system is transmitted to the batch database and updated. As in the real-time system, rod patterns for each assembly are preloaded into the computer's memory. The rod location which comes in with each rod transaction is compared to the location table to determine if the rod type is correct for that particular location. If the rod's position is correct, the transaction updates; if not, the transaction suspends and a warning message is generated to alert the area engineers to investigate and resolve the problem.

## CONTROL OF CONTAINER USAGE

Verification that required assemblies in fact contain Integral Fuel Burnable Absorber (IFBA) rods is based on procedural controls traceable to visual confirmation of the top end plug identification mark when the assembly is fabricated. Applicable process specifications, operating procedures, and quality control instructions contain explicit guidance on requirements for IFBA rods in assemblies to be placed in MCC containers that might not have the optional container neutron absorber plates installed.

## 1.2 SILVER – INDIUM – CADMIUM ROD CONTROL CLUSTER NEUTRON ABSORBERS (RCCA)

### INTRODUCTION

In the Hypothetical Accident Condition (HAC) test of Rod Control Cluster Absorber rods, a conclusion was drawn that indicated the rods maintained their relative design configuration. Therefore, two (2) undamaged fuel assemblies – having RCCA rods intact within the assembly – in the relative MCC container design configuration, were modeled for the Nuclear Safety Analysis.

### DESIGN

The Silver-Cadmium-Indium rod control clusters are essentially strong neutron absorbers contained within a stainless steel cladding. Control rod clusters typically consist of 16 to 24 rods attached to an apparatus for insertion into a fuel assembly. The chemical compositions for the Ag-In-Cd alloy are described in the following table:

| Element | Product Analysis | |
|---|---|---|
| | Min Wt% | Max Wt% |
| Ag | 79.5 | 80.5 |
| In | 14.75 | 15.25 |
| Cd | 4.75 | 5.25 |

The above material is typically classed as nominal Ag, 15 In, 5 Cd alloy. This material has a density of 10.17 g/cm$^3$ at room temperature and a melting point of 1472°F (800°C).

The alloys are fabricated as either cast or wrought bar. The cylindrical surface of the bar is essentially a smooth finish, free from cracks, laps, seams, slivers, blisters and other surface imperfections which due to their nature, degree, or extent will interfere with the use of the material. The end product is free of oxides, grease, oil, residual lubricants, polish material, and any other extraneous materials. The dimension for the cylindrical material is specified on applicable engineering drawings.

Each batch of material is identified as a specific lot. Extensive testing of each lot is necessary from a quality standpoint to ensure that dimensional tolerances are exact, the chemical compositions are correct, and that the bars are within specified weight tolerances.

### INTEGRITY

In order to demonstrate that the effectiveness of the silver control rod will not be reduced under Hypothetical Accident Conditions (HAC) prescribed in 10CFR71, a drop test was performed using simulated rods. Lead, which has similar mechanical properties to that of Ag-In-Cd, was used in three drop tests in the MCC container.

The drop tests clearly indicated that the control rods will maintain their integrity and relative design configuration within the assembly. The thermal and mechanical properties of the alloy clearly show that the rods would be effective neutron absorbers after a 1475°F thermal test coupled with water quenching and immersion.

## NUCLEONICS

The rod dimensions vary with the fuel design in which they are to be contained, however, the minimum dimensions are assumed in the nuclear design. These dimension are 0.329 in. o.d. silver rod, in a 0.367 in. o.d. stainless steel tube, with an absorber length of 142 in.

The dimensions on the silver rod described above are used in the actual criticality model. This is acceptable since the fabrication tolerances are very strict for use in reactor environments. The minimum chemical compositions described in the above table are used in the actual criticality analysis. Number densities calculated from the minimum chemical compositions are further reduced 25% to provide an additional safety margin. The actual number of absorber rods required for each assembly is described in the Nuclear Safety Analysis.

## QUALITY ASSURANCE

Each bar is inspected in accordance with written quality assurance procedures. Inspections conducted include visual appearance of the material finish, dimensions with calibrated equipment and weighing (cast bars only).

Two bars per lot minimum are sampled at random and analyzed to ensure that the material is within specification tolerances. Lots consist of all bars of the same nominal cross-section, condition and finish that are produced from the same heat, processed in the same manner, and presented for inspection at the same time.

Samples are also taken to show that there is no chemical heterogeneity between final rods. All samples are chemically or spectrographically examined. Traceability of each bar by heat is maintained through packaging and shipping.

The vendor who will fabricate the alloy bar has a quality assurance plan approved by Operations Product Assurance. Vendors will be qualified in accordance with WCAP 7800.

## CONTROL OF CONTAINER USAGE

Verification that required assemblies in fact contain Rod Control Cluster absorber (RCCA) rods is based on procedural controls and visible confirmation of installation when the assembly is loaded into the container. Applicable process specifications, operating procedures, and quality control instructions contain explicit guidance on requirements for RCCA's in assemblies without sufficient Integral Fuel Burnable Absorber (IFBA) rods to provide the required margin of safety, and/or in assemblies to be placed in MCC containers that might not have the optional container neutron absorber plates installed.

## 1.3 BOROSILICATE GLASS NEUTRON ABSORBERS (GLASS PYREX)

### INTRODUCTION

In the Hypothetical Accident Condition (HAC) test of Borosilicate Glass Absorber rods, a conclusion was drawn that indicated the rods maintained their relative design configuration. Therefore, two (2) undamaged fuel assemblies – having Glass Pyrex rods intact within the assembly – in the relative MCC container design configuration, were modeled for the Nuclear Safety Analysis.

### DESIGN

The Borosilicate Glass Neutron Absorber rod control clusters are essentially strong annular neutron absorbers contained within an inner and outer stainless steel cladding. Control rod clusters typically consist of 16 to 24 rods attached to an apparatus for insertion into a fuel assembly. The nominal chemical compositions for the Glass are described in the following table:

| Chemical Composition | |
|---|---|
| **Oxide** | **Weight %** |
| Silica ($SiO_2$) | 80.5 |
| Boron Trioxide ($B_2O_3$) | 12.5 |
| Alumina ($Al_2O_3$) | 3 |
| Sodium Oxide ($Na_2O$) | 4 |

The boron contained in $B_2O_3$ is natural without being depleted or enriched in $^{10}B$ isotope (18.5 ± 0.5 wt%). The density of the glass is 2.23 ± 0.01 g/cc at room temperature. The acceptable range for $B_2O_3$ material is ± 0.2. The material has a softening point of 1502°F (817°C). The glass is purchased in the form of tubing supplied free of internal stresses, tension, and compression.

The cylindrical surface of each glass rod is essentially a smooth finish, that is visually inspected for imperfections, crushed surfaces, knots, stones, chips, scuffs and scratches and cleanliness. The dimension of the cylindrical material is specified on applicable engineering drawings.

Each batch is identified as a specific lot. Extensive testing of each lot is necessary from a quality standpoint to ensure that dimensional tolerances are exact, the chemical compositions are correct and that the rods are within the specified density.

### INTEGRITY

In order to demonstrate that the effectiveness of the glass control rod will not be reduced under Hypothetical Accident Conditions (HAC) prescribed in 10CFR71, a drop test was performed using simulated rods. Lead, which has similar mechanical properties to that of Borosilicate glass, was used in three drop tests in the MCC container.

The drop tests clearly indicated that the control rods will maintain their integrity and relative design configuration within the assembly. The thermal and mechanical properties of the glass clearly show that the rods would be effective neutron absorbers after a 1475°F thermal test coupled with water quenching and immersion.

## NUCLEONICS

The rod dimensions vary with the fuel design in which they are to be contained, however, the minimum dimensions are assumed in the nuclear design. These dimension are 0.336 in. and 0.190 in. inner and outer diameters, respectively, for the glass in a 0.381 in. o.d. stainless steel tube with an absorber length of 142 in.

The dimensions on the glass rod described above are used in the actual criticality model. This is acceptable since the fabrication tolerances are very strict for use in reactor environments. The minimum chemical compositions described in the above table are used in the actual criticality analysis. The minimum $B_2O_3$ wt% of 12.3 is further reduced by 25% to provide for an additional safety margin. The actual number of absorber rods required for each assembly is described in the Nuclear Safety Analysis.

## QUALITY ASSURANCE

Each rod is inspected in accordance with written quality assurance procedures. Inspections conducted include visual appearance of the material finish, dimensions with calibrated equipment to a 95% confidence level, and weighing for density verification.

One tube per lot minimum is sampled at random and analyzed to ensure that the $B_2O_3$ material is within specification tolerances. Lots consist of all tubes of the same nominal cross-section, condition and finish that are produced from the same heat, processed in the same manner, and presented for inspection at the same time.

All samples are chemically or spectrographically examined. Traceability of each tube by heat is maintained through packaging and shipping.

The vendor who will fabricate the glass tube has a quality assurance plan approved by Operations Product Assurance. Vendor will be qualified in accordance with WCAP 7800.

## CONTROL OF CONTAINER USAGE

Verification that required assemblies in fact contain Glass Pyrex absorber rods is based on procedural controls and visible confirmation of installation when the assembly is loaded into the container. Applicable process specifications, operating procedures, and quality control instructions contain explicit guidance on requirements for Glass Pyrex rods in assemblies without sufficient Integral Fuel Burnable Absorber (IFBA) rods to provide the required margin of safety, and/or in assemblies to be placed in MCC containers that might not have the optional container neutron absorber plates installed.

## 1.4 WET ANNULAR BURNABLE NEUTRON ABSORBERS (WABA)

### INTRODUCTION

In the Hypothetical Accident Condition (HAC) test of Wet Annular Burnable Absorber rods, a conclusion was drawn that indicated the rods maintained their relative design configuration. Therefore, two (2) undamaged fuel assemblies – having WABA rods intact within the assembly – in the relative MCC container design configuration, were modeled for the Nuclear Safety Analysis.

### DESIGN

The Wet Annular Burnable Neutron Absorber rod control clusters are essentially strong annular neutron absorbers contained within an inner and outer stainless steel cladding. Control rod clusters typically consist of 16 to 24 rods attached to an apparatus for insertion into a fuel assembly. The nominal chemical compositions for the Glass are described in the following table:

| Chemical Composition | |
|---|---|
| **Oxide** | **Weight %** |
| Silica ($SiO_2$) | 80.5 |
| Boron Trioxide ($B_2O_3$) | 12.5 |
| Alumina ($Al_2O_3$) | 3 |
| Sodium Oxide ($Na_2O$) | 4 |

The boron contained in $B_2O_3$ is natural without being depleted or enriched in $^{10}B$ isotope (18.5 ± 0.5 wt%). The density of the glass is 2.23 ± 0.01 g/cc at room temperature. The acceptable range for $B_2O_3$ material is ± 0.2. The material has a softening point of 1502°F (817°C). The Glass is purchased in the form of tubing supplied free of internal stresses, tension, and compression.

The cylindrical surface of each glass rod is essentially a smooth finish, that is visually inspected for imperfections, crushed surfaces, knots, stones, chips, scuffs and scratches and cleanliness. The dimension of the cylindrical material is specified on applicable engineering drawings.

Each batch is identified as a specific lot. Extensive testing of each lot is necessary from a quality standpoint to ensure that dimensional tolerances are exact, the chemical compositions are correct and that the rods are within the specified density.

### INTEGRITY

In order to demonstrate that the effectiveness of the WABA rod will not be reduced under Hypothetical Accident Conditions (HAC) prescribed in 10CFR71, a drop test was performed using simulated rods. Lead, which has similar mechanical properties to that of WABA, was used in three drop tests in the MCC container.

The drop tests clearly indicated that the control rods will maintain their integrity and relative design configuration within the assembly. The thermal and mechanical properties of the glass clearly show that the rods will be effective neutron absorbers after a 1475°F thermal test coupled with water quenching and immersion.

## NUCLEONICS

The rod dimensions vary with the fuel design in which they are to be contained, however, the minimum dimensions are assumed in the nuclear design. These dimension are 0.336 in. and 0.190 in. inner and outer diameters, respectively, for the WABA in a 0.381 in. o.d. stainless steel tube with an absorber length of 142 in.

The dimensions on the WABA rod described above are used in the actual criticality model. This is acceptable since the fabrication tolerances are very strict for use in reactor environments. The minimum chemical compositions described in the above table are used in the actual criticality analysis. The minimum $B_2O_3$ wt% of 12.3 is further reduced by 25% to provide for an additional safety margin. The actual number of absorber rods required for each assembly is described in the Nuclear Safety Analysis.

## QUALITY ASSURANCE

Each tube is inspected in accordance with written quality assurance procedures. Inspections conducted include visual appearance of the material finish, dimensions with calibrated equipment to a 95% confidence level, and weighing for density verification.

One tube per lot minimum is sampled at random and analyzed to ensure that the $B_2O_3$ material is within specification tolerances. Lots consist of all tubes of the same nominal cross-section, condition and finish that are produced from the same heat, processed in the same manner, and presented for inspection at the same time.

All samples are chemically or spectrographically examined. Traceability of each tube by heat is maintained through packaging and shipping.

The vendor who will fabricate the WABA tubing has a quality assurance plan approved by Operations Product Assurance. Vendors will be qualified in accordance with WCAP 7800.

## CONTROL OF CONTAINER USAGE

Verification that required assemblies in fact contain WABA absorber rods is based on procedural controls and visible confirmation of installation when the assembly is loaded into the container. Applicable process specifications, operating procedures, and quality control instructions contain explicit guidance on requirements for WABA rods in assemblies without sufficient Integral Fuel Burnable Absorber (IFBA) rods to provide the required margin of safety, and/or in assemblies to be placed in MCC containers that might not have the optional container neutron absorber plates installed.

# APPENDIX 1-7
# $GD_2O_3$ NEUTRON ABSORBER PLATES SPECIFICATIONS

# $Gd_2O_3$ NEUTRON ABSORBER PLATES SPECIFICATIONS

## INTRODUCTION

Gadolinium oxide ($Gd_2O_3$), a strong neutron absorber, has been incorporated into an existing industrial cermet (coating similar to porcelain) for use as a neutron absorber plate. This cermet coating, when applied to a carbon steel base, possesses the required nuclear and mechanical characteristics to permit it to be used in the MCC fuel shipping containers.

These cermets are mainly used in applications requiring heat resistant or chemical resistant coatings such as jet exhausts or heat exchangers. Coating a steel base that provides shape and strength is a relatively simple spraying and fusing process which can be performed in a matter of minutes using existing industrial equipment and techniques.

## NUCLEONICS

The most effective absorber plate possible is one which is essentially "black" and absorbs all neutrons directed at it. The amount of $Gd_2O_3$ necessary to analytically achieve this characteristic is 0.020 gm/cm$^2$. This value is elevated by 25% such that a minimum of 0.027 gm/cm$^2$ is set as a design requirement. The number densities used in the criticality calculations for the Gadolinia in the plate coating are based on a coating density of 0.020 grams $Gd_2O_3$/cm$^2$. The effects of minor through-holes, to allow for handling and assembly clearance, and welding burn of the coating, have been evaluated and determined to have an insignificant effect on the absorber function of the plates.

Vertical Gadolinium neutron absorber plates are permanently installed in all the MCC shipping containers; segmented horizontal plates are installed in those MCC-3 and MCC-4 containers used to package fuel assemblies whose $^{235}U$ enrichment is greater than 4.65 wt%, and in all MCC-5 containers. Once segmented horizontal plates are added to an MCC-3 or -4 container, the plates will remain in place in that container. Optional vee-shaped guided absorber plates will be used in the MCC-5 container, in addition to the vertical and horizontal plates, when $^{235}U$ enrichment of the VVER-1000 assembly is greater than 4.80 wt%.

Although the minimum required concentration of gadolinium oxide is shown to be 0.027 gm/cm$^2$, the original KENO modeling was based on two layers of coating at 75% of this density; hence the design specifications for all vertical plates, and the horizontal plates for the MCC-3 and MCC-4 container, require a minimum of 0.054 gm/cm$^2$. The MCC-5 horizontal and vee-shaped plates are modeled with one layer of coating, or a minimum of 0.027 gm/cm$^2$.

## DESIGN

The Hypothetical Accident Condition (HAC) as defined in 10CFR71 requires that subcriticality of fuel assemblies in the shipping containers be demonstrated after, in sequence, a 30-foot free drop of the loaded container, puncture of the shell, exposure to 1475°F for 30 minutes and water immersion for 8 hours.

Since gadolinium oxide ($Gd_2O_3$) is a refractory ceramic which is similar to aluminum oxide ($Al_2O_3$) or zirconium oxide ($ZrO_2$), substitution of $Gd_2O_3$ for some or all of the $Al_2O_3$ or $ZrO_2$ in the finished coating

seemed reasonable. Through trial, a coating composition was arrived at which maximized the $Gd_2O_3$ content while maintaining physical properties comparable to the base cermet industrial coating. Sample absorber plate sections have demonstrated the coating's damage resistance to normal abrasion, high temperature (1475°F), thermal shock (water splash and quench), impact (30-foot free fall), and flexing. $Gd_2O_3$ absorber plates were also used in three 30-foot drop tests.

The vertical $Gd_2O_3$ absorber plate used in all MCC containers has approximate dimensions of 0.075" x 7.25" x 160" (189" for the MCC-4 and MCC-5 containers). The thickness is composed of 20 gauge (0.035") steel with a combined Gadolinia and Alumina coating. The coating is on both sides of the plate, such that the total coating contains at least 0.054 gm $Gd_2O_3/cm^2$. The assembly is fabricated by overlapping two sections of absorber plate and fusion welding the edges to produce a 160" (189" for XL) long assembly. The 160" assembly will weigh approximately 15 pounds. The vertical Gadolinium neutron absorber plate is used as a permanent feature within all MCC fuel shipping containers.

The segmented horizontal $Gd_2O_3$ absorber plates are designed such that they can be positioned beneath the strongback between cross-member supports. The width of the horizontal plates is increased to 8.75 inches for the MCC-3 and -4 containers and 9.25 inches for the MCC-5 container. Typical lengths range from 14.08 to 23.00 inches with corresponding weights of 1.9 to 3.1 pounds for the MCC-3 and -4 containers and 2.0 to 3.3 pounds for the MCC-5 container. The thickness is composed of 20 gauge (0.035") steel with a combined Gadolinia and Alumina coating. The coating is on both sides of the plate for the MCC-3 and MCC-4, such that the total coating is at least 0.054 gm $Gd_2O_3/cm^2$. The drawing requirement for the MCC-5 is also 0.054 $gm/cm^2$, although the KENO modeling only requires 0.027 $gm/cm^2$. The horizontal Gadolinium neutron absorber plate sections are used as an optional feature within the MCC-3 and -4 fuel shipping container, and as a permanent feature in the MCC-5 container. However, once an MCC-3 or -4 container has the horizontal plates installed, they will remain in that container permanently.

The horizontal vee-shaped $Gd_2O_3$ guided absorber plate used for the MCC-5 container is similar to the horizontal plates in terms of segmented lengths; however, these plates are shaped to conform to the surface of the VVER-1000 assembly and are positioned between the strongback and the assembly. The guided absorber plates are positioned between the container internals grid support structure and below the fuel assembly; as such, they do not support the weight of the fuel assembly. This vee-shaped guided absorber plate is thicker (0.060 inches) than the normal vertical and horizontal plates and is coated only on its underside with the normal $Gd_2O_3$ loading of 0.027 $gm/cm^2$. The plate width is typically 9.24 inches, with a total $Gd_2O_3$ coated width of approximately 11.06 inches. Typical lengths range from 6.60 to 15.48 inches with corresponding weights of 1.9 to 5.75 pounds. The Gadolinium neutron absorber guide plate sections are used as an optional feature within the MCC-5 shipping container. However, once an MCC-5 container has the guided absorber plates installed, they will remain in that container permanently.

## INTEGRITY

### Coating Flexibility

The absorber plates are restrained by the container internals once the plates are installed. One side of each vertical plate faces a continuous sheet metal skin. The other side of each plate faces a ladder-like frame of 1.5 inch square tubing spaced approximately every 20-24 inches. Consequently the plate may bow

approximately 1.5 inches at the most between any pair of square tubes. A simple simulation of these conditions with a section of full-size absorber plate reveals no noticeable effect except for slight permanent set of the steel backing. Horizontal plates are mounted in direct contact with the underside of the strongback, and cannot flex more than the strongback itself. The guided absorber plates are mounted to the top of the strongback, and cannot flex more than the strongback.

Improper handling of fabricated plates could cause coating damage. Small radius bends (approximately 2") will cause the coating on the compression side of the plate to crack locally and flake. Bends of 4" radius have no noticeable effect on the coating surface or adherence to the metal base. Normal handling can easily accommodate this restriction by use of a strongback or manual support to prevent small radius bends of the plate. Detection of possible coating damage by bending is simple. First, the metal backing will take a permanent set long before the coating is affected. Second, when damage occurs, it causes noticeable flaking and/or loss of material. Expected handling and service of the plates will not exceed their capability to flex without functional impairment.

Coating Impact Resistance

As part of the HAC, three MCC containers containing two plates each were subjected to 30-foot drops. Since the internals suspension system cannot absorb all internal energy, mechanical shock of the internals will occur. Sample plates were also subjected to a 30-foot free drop onto 1/2 inch steel plate. The plates were dropped, using guide wires, in the flat (plate width horizontal) and guillotine (plate width vertical) configurations. The flat configuration only slightly deformed the metal backing with no obvious coating damage. The guillotine configuration, where the plate dropped on edge, caused local deformation of the plate edge and random flaking of the coating edge up to 1/8" away from the plate edge. The bulk of the coating was unaffected by the severe shock.

As part of the process specification, adhesion tests are performed on production plates to industry standards. These tests allow a process check to verify the consistency of the coating process and that production plates are representative of sample performance.

These tests demonstrated that the coating is capable of withstanding impacts far greater than that expected under accident conditions in its protected location inside the MCC shipping container support frame. $Gd_2O_3$ plates present in the three drop tests described in Chapter 2 yielded no obvious coating damage.

Coating Abrasion Resistance

The absorber plates which are positioned within and under the support frame, and the guided absorber plates which are mounted on top of the strongback, are not exposed to conditions where abnormal abrasion forces would occur. The edges of the plate do not need to be coated, and purposely are not coated, although the spraying operation will tend to deposit material there. The bottom edge of the vertical absorber plate interfaces with the internals and bears the weight of the plate. Therefore, the edges of the plates which have been coated and fused will be abraded to base metal to eliminate the generation of gadolinium bearing debris and its possible migration from the container during inspection, cleaning, painting, etc.

The sides of the plates see negligible loads and broad contact areas. The coating is not easily affected by distributed loads; a hard, sharp edge tool is necessary to visibly scar the coating surface.

The gadolinium absorber plates installed in containers which were subjected to a 30-ft. drop test were visually examined after a one year period to verify that their condition was comparable to that of original installation. There was no visible evidence of loss of coating. The coating is adequately abrasion resistant to withstand its service environment and maintain its functional capabilities.

High Temperature Integrity

The HAC essentially requires the container and its contents to withstand 1475°F for 30 minutes and subsequent cooldown. Commercially available materials were either inadequate as neutron absorbers or deteriorate upon exposure to 1475°F. The components of the coating are fused at approximately 1530°F during processing. The sides of the plates are oriented vertically during processing; fusing of the coating at these temperatures does not cause the material to flow from its applied configuration. The fusing is more of a limited wetting condition where materials in intimate contact join as compared to brazing, for example, where the braze wets the base material and flows under the effects of gravity and capillary action.

Sample plates were arranged in a muffle furnace to simulate their interface with the shipping container internals and each other. The purpose of the test was to verify that the plate's coating would not be altered by contact with interfacing surfaces such that its functional characteristics were affected. Once arranged, the furnace was turned on, stabilized at 1475°F for three-and-one-half hours and then turned off. The furnace door was opened and the plates removed when the indicated temperature had dropped to approximately 200°F. The plates were not noticeably altered in either case from their pre-test condition.

10CFR71 regulations specify exposure to an environment of 1475°F with an emissivity coefficient of 0.9 and package absorption coefficient of 0.8. Consequently, the package is heated up to its maximum temperature during the 30 minute period. Also, cooling of the package realistically begins as soon as the radiation environment is removed. The test performed is conservative since the plates were held at 1475°F for the entire 30 minute period, as well as the subsequent three-hour period where natural cooling is permitted.

The plates were then individually heated to 1475°F, removed at that temperature and subjected to poured (room temperature) water on one side. The plates were again heated, removed and then quenched in a bucket of room temperature water. The plates did not exhibit any noticeable cracks, flaking or separations. The plates' demonstrated resistance to thermal shock is similar to the industrial cermets and is adequate for any thermal shock the plates could possibly experience in a shipping container.

These tests demonstrated that absorber plates are capable of meeting the required high temperature accident conditions as well as unlikely, severe thermal shock.

Water Exposure

The absorber plate coating, by its characteristic cermet nature, is essentially impervious to water exposure for an eight-hour period. No formal tests are conducted.

## QUALITY ASSURANCE

The basic requirement is that at least the design amount of absorber material ($0.027 g/cm^2$) is present in any given area. This requires verification first that the absorber material is present and second that the minimum quantities have been deposited.

For all three types of plates, the cermet is composed of 32.5 wt% $Gd_2O_3$. The distribution of absorber material in a unit thickness of the coating is assumed to be uniform because the extremely fine (1-10 microns) $Gd_2O_3$ powder and other powder coating components are combined in a water slurry and sprayed onto the metal backing. An analysis by X-ray fluorescence at Westinghouse ARD laboratories, as expected, did not discover any areas in sample absorber plates significantly deficient in $Gd_2O_3$ compared to other areas (the equipment examined areas the diameter of a dime). This test is not performed on production samples or plates because the nature of the materials and process are unlikely to cause any segregation of materials and, as explained, there will be absorber material in excess of actual design minimum loadings.

Final verification that the neutron absorber $Gd_2O_3$ is actually in the coating (not $Al_2O_3$ or $ZrO_2$ for example), and present in acceptable concentrations, is made using verified standards and a portable elemental analyzer. The analyzer, using the X-ray fluorescence method, verifies that gadolinium is present by measuring the energy of the fluorescing X-rays that are uniquely characteristic of that element. By comparing the intensity of those X-rays to that of verified standards, it can be determined that the minimum density of 0.027 or 0.054 gm $Gd_2O_3/cm^2$ is indeed present.

Process control of the coating composition and minimum thickness will insure that the minimum design loading of $Gd_2O_3$ is applied to each plate. Use of the analyzer verifies the $Gd_2O_3$ loading in the end product composition. The analyzer reading will be documented according to the bright yellow identification number stenciled and fused into the coating of each plate.

The standards used to calibrate the elemental analyzer will have a master in Columbia archives for quality control standards. Preservation of the master standard will enable the plates' $Gd_2O_3$ content to be checked anytime in the future.

The vendor who will fabricate the absorber plates has a quality assurance plan approved by Operations Product Assurance. Vendors will be qualified in accordance to WCAP 8370.

## CONTROL OF CONTAINER USAGE

For MCC containers, once an absorber plate, whether vertical, horizontal, or shaped, is installed, it remains permanently in that container. As each container receives plates, the documentation associated with that container is updated to show its current configuration, and the container is marked. Container selection for each contract's shipments is made based on the information contained in the permanent records, and is approved by the Manager of Nuclear Materials Management. The process specification, operating procedures, and quality control instructions contain explicit guidance on requirements for the required plate verification and documentation at the time of plate installation. Additional controls exist in the Fuel Assembly Packing area to assure that the correct containers are used. "Correct" means that the

container has at least the minimum allowable absorbers for the enrichment of the assemblies to be shipped; any container having more absorbers than required by the assembly enrichment may be used.

## TECHNICAL JUSTIFICATION FOR REVISING THE ABSORBER PLATE INSPECTION REQUIREMENTS

The justification for relaxing the absorber plate inspection requirements follows from the conclusions that can be drawn from the following observations. Supporting information, showing calculations for determining area density, and tables showing $k_{eff}$ results for the various fuel assembly types, is included in the next section.

Justification

1. For the design criteria for absorber plate coating:

   a. The design minimum area density for $Gd_2O_3$ per absorber plate side is 0.027 g/cm$^2$.

2. For the absorber coating actually applied:

   a. The coating, 32.3 wt% $Gd_2O_3$, was applied to an actual minimum thickness of 8.25 mils equivalent $Gd_2O_3$ per side.

   b. The area density that 8.25 mils translates to is 0.0984 g-$Gd_2O_3$/cm$^2$.

   c. The total area density, therefore, for a double-sided absorber plate is 0.1968 g-$Gd_2O_3$/cm$^2$.

3. For the absorber plates used in all Westinghouse calculations:

   a. The area density used was 0.02 g-$Gd_2O_3$/cm$^2$. This corresponds to the theoretical "black" density for $Gd_2O_3$ with respect to thermal neutrons.

   b. The total area density, therefore, for the double-sided absorber plates used in the models was 0.04 g-$Gd_2O_3$/cm$^2$.

   c. This area density translates to a coating thickness of 1.67 mils.

4. Results from calculations for the double-sided absorber plates (0.02 g-$Gd_2O_3$/cm$^2$ area density per side; 0.04 g/cm$^2$ total) satisfy NRC requirements.

5. Calculations made for the most reactive fuel assembly type using single-sided absorber plates (0.02 g-$Gd_2O_3$/cm$^2$ area density total) satisfy NRC requirements. Results indicate that $k_{eff} \leq 0.95$.

6. Therefore, because, by design, a single side of an absorber plate contains a $Gd_2O_3$ area density of at least 0.027 g/cm$^2$, and because, by actual measurement during application, a single side contains an area density almost five times thicker than the "black" density (0.02 g-$Gd_2O_3$/cm$^2$), and because, using approved Westinghouse models with absorber plates with $Gd_2O_3$ area

densities of 0.02 gm/cm$^2$ for most reactive fuel assembly types, calculated $k_{eff} \leq 0.95$, it follows that it is technically acceptable to conclude that an absorber plate provides satisfactory criticality safety protection based on a detailed visual inspection of the coating on just the visible side.

Supporting Calculations

1. The absorber coating that was actually applied to the plates is composed of 32.5 wt% $Gd_2O_3$, and applied to a *minimum* thickness of 8.25 mils equivalent $Gd_2O_3$/cm$^2$. To determine area density (gm $Gd_2O_3$/cm$^2$) provided by a coating depth of 8.25 mils, calculate the following:

   a. Convert mils to cm:

      - mils → 0.00825 inch
      - inch → 0.020955 cm

   b. Given the volumetric density of $Gd_2O_3$ = 7.407 gm/cc , determine the actual area density of $Gd_2O_3$.

      - cm * 7.407 g/cc = 0.1552 g/cm$^2$

   c. Include the following conservative assumptions to determine final conservative value:

   d. Therefore, the area density per side of an absorber plate, including several conservative assumptions, is actually 0.0984 g-$Gd_2O_3$/cm$^2$.

2. Note that Westinghouse specifications require that the minimum area density applied to any one side of an absorber plate is 0.02 g- $Gd_2O_3$/cm$^2$. This corresponds to the area density that is considered "black" for thermal neutron. Also, this is the area density value that has been used in all Westinghouse KENO models for each coated side of every absorber plate.

3. Therefore, it is necessary to determine the equivalent mil thickness of $Gd_2O_3$ that is needed to provide an area density of 0.02 g-$Gd_2O_3$/cm$^2$. To determine the actual coating thickness that corresponds to this area density, compute backwards:

   a. Compensate for the following conservative assumptions:

      - Assume 25% increase in density:
        g/cm$^2$ ÷ 75% = 0.027 g/cm$^2$

      - Compensate for the influence that one plate will have on the other for a double sided Gd absorber plate (~11%):
        g/cm$^2$ + 11% (.027 g/cm$^2$) = 0.030 g/cm$^2$

      - Assume 95% theoretical density for Gd:
        g/cm$^2$ ÷ 95 % = 0.0315 g/cm$^2$

b. Again, given the volumetric density of $Gd_2O_3$ = 7.407 gm/cc, determine the thickness of the coating:

- $g/cm^2 \div 7.407$ g/cc = 0.00425 cm

c. Convert cm to mils:

- cm → 0.00167 inch
- inch → 1.67 mils

d. Therefore, the mil thickness $Gd_2O_3$ required per side to provide area density of 0.02 g-$Gd_2O_3/cm^2$ is 1.67 mils.

4. Previous calculations give $k_{eff}$ results for all type fuel assemblies in shipping containers with different neutron-absorber configuration. The results are presented in Table 6-3-1 of Appendix 6-3. These include double-sided $Gd_2O_3$ coated plates. Each side provides an area density of 0.02 g-$Gd_2O_3/cm^2$. Therefore, the total area density for the double-sided plate is 0.04 g-$Gd_2O_3/cm^2$.

5. New calculations performed using single-side coating on absorber plates, giving an area density of 0.02 g-$Gd_2O_3/cm^2$, give the following results:

| Assembly Type | Enrichment wt% | Added Absorbers | KENO $k_{eff} \pm 1\sigma$ | 95/95 w/Bias |
|---|---|---|---|---|
| Type B [vi, vii] also with guide and thimble tubes | 5.00 | Optional Gd Plates | 0.93667 ± 0.00133 | 0.94586[1] |
| Type B [vi, vii] also with guide and thimble tubes | 4.70 | None | 0.93919 ± 0.00132 | 0.94836[1] |

Note:
1. Analysis CRI-97-006, completed March 10, 1997.

# APPENDIX 1-8
# DESIGN COMPARISON OF THE MCC-5 PACKAGE TO THE MCC-4 PACKAGE

## DESIGN COMPARISON OF THE MCC-5 PACKAGE TO THE MCC-4 PACKAGE

As shown on the various package general arrangement drawings in Appendix 1-3, the following list summarizes the design differences between the MCC-5 (a modified MCC-4 package designed specifically for transportation of VVER-1000 fuel assemblies) and the MCC-4 package (designed to transport a variety of other, standard, fuel assemblies).

1. **Component Weights:** The maximum weight MCC-4 fuel assembly (square lattice) weighs slightly more than the maximum weight MCC-5 fuel assembly (VVER-1000). The MCC-4 package internal structure weighs slightly less than the MCC-5 internal structure. The external structure (shell) weight is identical for both packages, resulting in an equivalent total gross package weight for both packages.

2. **Bottom Support Plate Gussets:** The MCC-4 package utilizes two bottom support plate gussets. The MCC-5 package utilizes four bottom support plate gussets.

3. **Bottom Support Plate:** The MCC-5 package bottom support plate is slightly different from the MCC-4 package to allow proper interfacing of the bottom nozzle support spacer.

4. **Bottom Nozzle Support Spacer:** Unlike the MCC-4 package, the MCC-5 package utilizes a bottom nozzle support spacer to preclude damage to the VVER-1000 fuel assemblies during transport.

5. **Top Nozzle Support Spacer:** Unlike the MCC-4 package, the MCC-5 package utilizes a top nozzle support spacer to preclude damage to the VVER-1000 fuel assemblies during transport.

6. **Top Nozzle Barrel Support:** Unlike the MCC-4 package, the MCC-5 package utilizes a top nozzle barrel support to preclude damage to the VVER-1000 fuel assemblies during transport.

7. **Top Closure Assembly:** The MCC-5 package top closure assembly is slightly different from the MCC-4 package top closure assembly to allow proper interfacing of the top nozzle support spacer.

8. **Clamping Frames and Pressure Pads:** The MCC-4 package clamping frames are shaped to contain two pressure pad assemblies for supporting standard-type, square fuel assemblies, whereas the MCC-5 package clamping frames contain three pressure pad assemblies for supporting the hexagonally-shaped VVER-1000 fuel assemblies.

9. **Upper Pivot Mounts:** The MCC-4 package upper pivot mounts are identically shaped, but somewhat shorter, than the MCC-5 package upper pivot mounts.

10. **Grid Support Blocks:** Unlike the MCC-4 package, the MCC-5 package utilizes grid support blocks at the fuel assembly grid support strap locations to provide lateral support for the hexagonally-shaped VVER-1000 fuel assemblies.

# CHAPTER 2: STRUCTURAL EVALUATION

## 2.1 STRUCTURAL DESIGN

### 2.1.1 Discussion

The design of the MCC series of unirradiated fuel shipping containers is basically the same for all models. The fundamental differences between models are length and weight. All containers consist of a container shell (base and cover) and an internals assembly. Positive closure of the shell base and cover is accomplished by means of high strength bolts. The number of bolts is proportional to the length of the container, thus maintaining the loading per bolt at a nominal value that is well below the bolt's ultimate strength. Both the shell design and bolts have been subjected to the drop conditions of 10CFR71 without failure. Therefore, these designs are more than adequate to withstand the loads experienced during normal conditions of transport. See the Westinghouse container drawings, for details of these designs, which are included as Appendix 1-3 to this application.

### 2.1.2 Design Criteria

The design of the MCC Series of containers complies with structural requirements of 10CFR71. This is accomplished through the application of design criteria which permits no yielding of the container shell under a static loading of 5 times the weight of the loaded package, and no yielding of the internals assembly under static loadings of 6 times the expected maximum weight of the package contents.

The MCC container design has been demonstrated to comply with the hypothetical drop accident conditions of 10CFR71. An MCC container, loaded to 100 percent of expected maximum weight of contents, was subjected to the drop conditions. This drop test did not produce a configuration more reactive than that analyzed in the criticality evaluation.

Since the containers are fabricated from carbon steel, the following yield stress values are used:

| | |
|---|---|
| Tensile Yield Stress: | 30000 psi |
| Shear Yield Stress: | 15000 psi |
| Weld Shear Yield: | 13600 psi |

## 2.2 WEIGHTS AND CENTERS OF GRAVITY

The weights and centers of gravity for the MCC containers are tabulated and presented in Appendix 2-2 to this application.

## 2.3 MECHANICAL PROPERTIES OF MATERIALS

The structural materials used in the MCC series of containers consists of AISI 1010-1020, ASTM A36, ASTM A240, and ASTM A283 steels. Mechanical properties for ASTM materials are found in the respective ASTM Specifications; mechanical properties for the AISI 1010-1020 material is section 2.1.2 of this chapter. Material properties of the load suspension system are provided in Appendix 2-3 to this application.

## 2.4 GENERAL STANDARDS FOR ALL PACKAGES

### 2.4.1 Chemical and Galvanic Reactions

The MCC container is fabricated from structural steel, and the fuel assemblies are fabricated from stainless steels and zircaloy; thus, no potential exists for chemical or galvanic reactions to occur.

### 2.4.2 Positive Closure

The MCC container is positively closed by means of high strength bolts which require use of tools and deliberate action to facilitate their removal. The number, type, and size of these bolts are provided on the drawings included in Appendix 1-3 to this application.

### 2.4.3 Lifting Devices

The lifting attachments that are a structural part of the MCC container shell are designed with a minimum safety factor of 4 against yielding when used to lift the loaded container in the intended manner.

### 2.4.4 Tiedown Devices

Tiedown attachments that are a structural part of the MCC container shell are designed to be capable of withstanding a static force applied to the center of gravity of the loaded container having:

1. A vertical component of 2 times the weight of the loaded container;

2. A horizontal component, along the transport vehicle forward direction, of 10 times the weight of the loaded container; and,

3. A horizontal component, in the transverse direction, of 5 times the weight of the loaded container.

## 2.5 STANDARD FOR TYPE B AND LARGE QUANTITY PACKAGING

Not applicable.

## 2.6 NORMAL CONDITIONS OF TRANSPORT

The performance requirements specified in Subpart F of 10CFR71 for normal conditions of transport are met by the MCC containers. This regulatory compliance is demonstrated in the following subsections where each normal condition is addressed and shown to meet the applicable regulatory criteria. Detailed supporting information can be found in Appendix 2-4.

### 2.6.1 Heat

Chapter 3 of this application concludes that the normal heat conditions specified in 10CFR71.71(c)(1) will have negligible effects on the MCC containers.

#### 2.6.1.1 Summary of Pressures and Temperatures

There is no pressure seal in the MCC containers. Therefore, there is no pressure build up within the container. The unirradiated fuel assemblies under the required 10CFR71 sun conditions develop temperatures of less than 200°F for the components of the MCC containers.

#### 2.6.1.2 Differential Thermal Expansion

The differential thermal expansion for the MCC containers is negligible. The greatest differential is between the outer shell and the internals – 0.188 inches. This differential creates very little stress as it is accommodated by the vibration isolators. Details can be found in Appendix 2-4.

#### 2.6.1.3 Stress Calculations

Due to the lack of hard restraints within the container and the fact that it does not have pressure seals, the package will not develop any significant stresses due to normal conditions of transport for heat per section 71.71(c)(1) of 10CFR71.

#### 2.6.1.4 Comparison with Allowable Stresses

The heat conditions of 10CFR71.71(c)(1) do not create any significant stresses within the package. Therefore, allowable stress limits are not exceeded.

### 2.6.2 Cold

The cold conditions specified will not adversely affect the performance of the package. Due to the materials of construction and the dimensions of the material's cross section, brittle fracture is not a concern.

### 2.6.3 Pressure

Since the package is not sealed against pressure, there can not be any significant differential pressure. However, information presented in Appendix 2-4 demonstrates that the package could withstand the differential pressure described in 10CFR71.71 if the containers were sealed.

### 2.6.4 Vibration

Analyses presented in Appendix 2-4 demonstrate that the package has a sufficient margin of safety to resist the loads imposed by shock and vibration incident to normal conditions of transport per 10CFR71.71(c)(5).

### 2.6.5 Water Spray

The water spray requirement of 10CFR71.71(c)(6) will have no effect on the MCC containers since the exterior is constructed of steel.

damage several positions were considered. The side drop with the top down was considered to cause the greatest loads per clamp frame, which could cause a failure of the clamp frame, or the connections, in such a manner that the fuel would be free. The other condition that could have the same effect would be the side drop on the corner of the clamp frames. To maximize the damage in this orientation, an oblique drop that would create high loads due to slapdown was considered. The other orientation of interest was the side drop on the closure flange. This orientation would create the greatest loadings on the closure T-bolts. Failure of sufficient bolts to allow the bottom (containing internals) to separate from the cover was the concern.

It is shown in Appendix 2-5 that for all orientations the containers have an adequate margin of safety against either the fuel assemblies becoming free or the outer shell separating from the container. These margins were confirmed by full-scale testing. The details of the evaluation and confirmatory testing can be found in Appendix 2-5.

#### 2.7.1.1 End Drop

The end drop does not impose any load on the MCC containers that will cause the fuel to separate from the clamp frames or separate the closure. Therefore, the end drop does not influence the criticality spacing of the package. Supporting evaluations can be found in Appendix 2-5.1.

#### 2.7.1.2 Side Drops

##### 2.7.1.2.1 Side Drop onto Container Top

The restraint of the fuel and the necessary spacing is maintained in this orientation. The clamp frame and snubber assembly adequately hold the fuel and easily maintain the spacing. This is demonstrated in the evaluation shown in Appendix 2-5.1. Confirmation of the evaluation is found in the testing of the package described in Appendix 2-5.3.

##### 2.7.1.2.2 Side Drop with Slapdown onto Internal Clamp Frames

The oblique drop, which puts the greatest load onto the clamp frames, imparts significant damage on both the external shell and the internals. This damage is localized, allowing redundancy in the container design to maintain restraint of the fuel in the clamp frame and within the external package. Details of this evaluation are in Appendix 2-5.1. Justification of the impact angle is located in Appendix 2-5.2. Confirmation testing results are in Appendix 2-5.3.

##### 2.7.1.2.3 Side Drop onto Package Closure

The side drop onto the package closure imparts the greatest separation moments to the package closure. The evaluation in Appendix 2-5.1 demonstrates that the package closure has adequate margin to keep the outer shell together. Due to the construction of the package, various mechanisms apply loads to the closure T-bolts during the impact. These are evaluated in detail in Appendix 2-5.1. Confirmation of the adequacy of the closure was demonstrated by full scale testing discussed in Appendix 2-5.3.

#### 2.7.1.3 Corner Drop

The corner drop event will impart loads into the container that will result only in localized damage that does not influence the overall criticality spacing which is of concern. The actual loads imparted into the components of concern are bounded by the side impacts and the oblique drop.

#### 2.7.1.4 Oblique Drops

The results of the oblique drop evaluation are covered in Section 2.7.1.2.2. Details of the evaluation can be found in Appendix 2-5.1. Justification for the angle of impact evaluated is in Appendix 2-5.2. Conformational testing results are located in Appendix 2-5.3.

#### 2.7.1.5 Summary of Results

The evaluations of the various drop orientations, and the resulting damage, demonstrates that the containers have adequate margin to maintain restraint of the fuel and integrity of the closure, to maintain spacing between adjacent fuel assemblies. Significant localized damage occurs that does not influence the overall spacing. Further discussion of the damage can be found in Appendix 2-5.

### 2.7.2 Puncture

Due to the localized nature of the puncture impact, the pin puncture will not change the ability of the container to maintain the criticality spacing of the fuel assemblies. In addition, due to the redundancy in the containers' design, any single component that could be destroyed by the puncture event, such as a clamp frame or connection, would not change the effectiveness of the package. Therefore, the puncture event described in 10CFR71.73(2) is not a controlling condition for the MCC containers.

### 2.7.3 Thermal

The thermal evaluation of the MCC containers for the hypothetical accident heat condition is discussed in Chapter 3.

#### 2.7.3.1 Summary of Pressure and Temperatures

The accident case pressure is assumed to be 0 psig since the container is not sealed. The fuel rods are designed to withstand a maximum temperature of 2,200°F without substantial damage. During the accident fire condition, it is assumed that all combustible components are burned away.

#### 2.7.3.2 Differential Thermal Expansion

Because of the thin components and the isolation of the internal structure from the external structure, the accident case thermal loads will not develop thermal gradients of a sufficient magnitude to result in significant thermal stress.

#### 2.7.3.3 Stress Calculations

Due to the construction of the MCC containers, there are no significant stresses developed by the thermal gradients.

#### 2.7.3.4 Comparison with Allowable Stresses

The negligible stresses are significantly lower than any of the allowable stresses.

### 2.7.4 Water Immersion

Since the MCC containers are not sealed against pressure, there will not be any significant differential pressure with the water immersion loads defined in 10CFR71.73(5). The water immersion will have little effect on the container or payload.

### 2.7.5 Summary of Damage

The most significant damage to the package comes from the free drop and the thermal event. Portions of the clamp frames and closure T-bolts are damaged and become ineffective. Since the system is highly redundant, sufficient clamp frames and closure T-bolts remain intact in all cases to provide restraint of the fuel assemblies and maintain closure. Details of the damage to the packages from the drop events can be found in Appendix 2-5. It is assumed that the accident thermal load will burn away all combustible material in the package, including the shock mounts. This assumption allows the internal structure (with the restrained fuel) to contact the outer shell, but remain within the outer shell. The upper and lower external shell assemblies stay together, retaining the fuel inside. The gadolinium plates within the internal structure will remain intact and maintain their relative position to the fuel.

## 2.8 SPECIAL FORM

Not applicable.

## 2.9 FUEL RODS

Fuel rod cladding is considered to provide containment of radioactive material under both normal and accident test conditions. Discussion of this cladding, and its ability to maintain sufficient mechanical integrity to provide such containment, is described in Chapter 4, "Containment," of this application.

# APPENDIX 2-1
# REFERENCES

## REFERENCES

No documents referenced in the text of this section.

# APPENDIX 2-2
# CONTAINER WEIGHTS AND CENTERS OF GRAVITY

| Maximum Weights for Loaded Shipping Containers[1] | | | |
|---|---|---|---|
| **Component** | **MCC-3** | **MCC-4** | **MCC-5** |
| Fuel | 3300 | 3870 | 3700 |
| Internals | 1964 | 3118 | 3288 |
| Shell | 2280 | 3545 | 3545 |
| Total | 7544 | 10,533 | 10,533 |

Note:
1. Units of pounds.

MCC-3

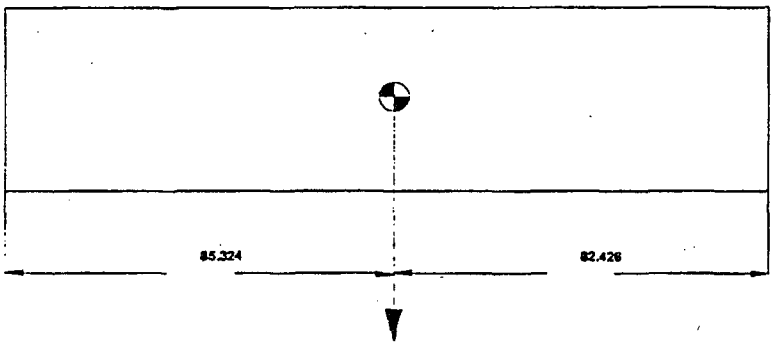


MCC-4

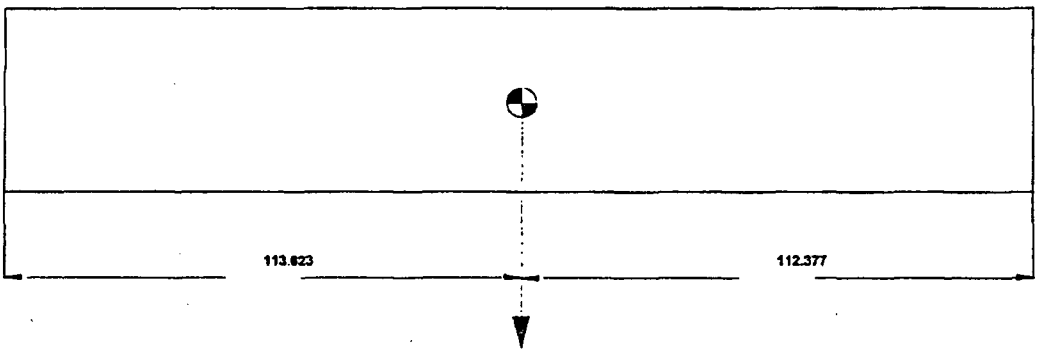


MCC-5

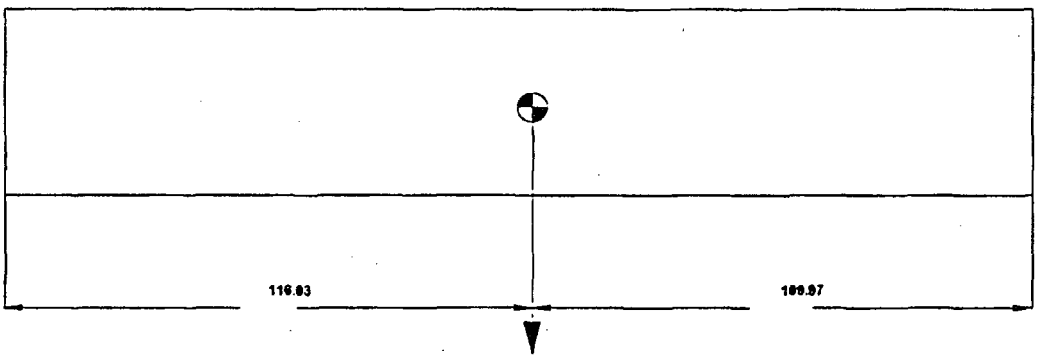


**Center of Gravity for Loaded Shipping Containers**

# APPENDIX 2-3
# CONTAINER LOAD SUSPENSION SYSTEM

# CONTAINER LOAD SUSPENSION SYSTEM

## INTRODUCTION

The following information is taken from a report submitted by Lord Kinematics[1] specifically written for the shipping containers of a design quite similar to MCC series containers. Because the load suspension systems are similar, the information is applied to the MCC-4 and MCC-3 shipping containers.

## 1.0 OBJECTIVE

1.1 The purpose of this report is to summarize the requirements, design and performance of a shipping container suspension system for Westinghouse Electric Company XL and conventional 12 ft. nuclear fuel rod assemblies.

## 2.0 RECOMMENDATION

2.1 The suspension system consists of 24 pieces of Lord part number J-5735-64. There is no change in the suspension system made when used to transport the lighter weight 12 ft. nuclear fuel assemblies. A detailed tabulation of performance data is presented in the Attachment.

2.2 In order to not exceed the design goal shock fragility of 6 G's maximum, the maximum vertical flat drop height is 10" and the maximum rotational drop height is 24".

## 3.0 DISCUSSION

3.1 The sandwich mounts have a cylindrically shaped elastomer section made in Lord SPE I elastomer. The nominal static radial or shear stiffness of J-5735-64 is 215 lb/in. The axial or compression/tension stiffness is approximately 6.5 times the radial stiffness. SPE I, like other elastomers has dynamic stiffness characteristics quite difference from static stiffness characteristics. The ratio of dynamic to static stiffness for the proposed mount is approximately 1.3. All elastomers are inherently damped and SPE I is no exception. The resonant transmissibility of J-5735-64 is approximately 6, resulting in a loss factor of 0.17. SPE I is a special purpose elastomer having an operating temperature range of -65°F to 160°F. All elastomers exhibit a change in stiffness due to temperature variations. At -40°F, the lowest operating temperature for this application, the proposed mount has a stiffness approximately 1.7 times that at 70°F. At +160°F the proposed mount has a stiffness approximately 0.85 times that at 70°F.

3.2 The suspension system consists of 12 pairs of J-5735-64 arranged along the bottom of the suspended unit. Each mount supports an equal share of the total suspended weight in shear. Part number J-5735-64 was selected chiefly for logistics since Westinghouse Electric Company has used this part in the past for other nuclear fuel rod assembly shipping containers. It is

[1] Lord Kinematics, Shipping Container Suspension System for Westinghouse Electric Corporation XL and Nuclear Fuel Rod Assemblies, June 1, 1978.

advantageous to have pitch rotational and vertical translational natural frequencies that are difference so that these two modes are not in phase. It should be noted that a shift in unit c.g. location longitudinally from the proposed location would result in pitch rotational/vertical translational coupling. The longitudinal mount spacing will result in a relatively high pitch rotational natural frequency less likely to be excited by normal transportation vibration environments.

3.3 The computer analyses in the Attachment were performed on Lord's Six-Degree-of-Freedom shock program. The coordinate system used is located at the center of the gravity of the suspended unit. This coordinate system consists of three mutually orthogonal axes obeying the right hand rule. The Z axis is directed vertically outward from the unit center of gravity. The X axis extends longitudinally toward the forward end of the fuel rod assemblies. The Y axis lies in the horizontal plane containing the X axis and is directed in the lateral direction. The stiffness characteristics of each mount is listed in addition to the direction cosine that each stiffness direction makes with the three coordinate axes.

K(1) and K(3) correspond to mount shear stiffness values and are parallel to X and Z axes respectively. K(2) corresponds to the mount compression/tension stiffness value and is parallel to the Y axis. The dynamic to static stiffness ration for each mount is listed in the printout. Eta is the lost factor of the elastomer and is approximately equal to the reciprocal of resonant transmissibility. The computer program does not use loss factor in the solution of system response; consequently, viscous dampers having a damping ratio of .085 were added parallel to K(1), K(2), and K(3) at each mount location so that a damped response could be obtained. It should be noted that a dynamically equivalent 4 mount system was analyzed rather than the 24 mount system since the computer program used is limited to a maximum number of 12 mounts. The development of the dynamically equivalent system is presented in the Attachment.

Six undamped natural frequencies are calculated and if the system is completely uncoupled, the frequencies would correspond to the X, Y, Z translational and roll, pitch, yaw rotational natural frequencies. In order to depict the more complex coupled vibrational modes, a screw analogy is used for every frequency calculated, there is a corresponding point in space through which an invariant axis passes.

This invariant axis is called a modal axis and its direction cosines are listed in the output. The suspended unit can rotate about this axis and simultaneously translate along it. The lead of screw indicates the distance in inches that the suspended unit travels parallel to the modal axis for one complete revolution about it. If the lead of screw is zero, the suspended unit simply rotates about the modal axis. As the modal axis moves from the center of gravity to a point an infinite distance away from the center of gravity, the vibrational mode associated with that particular frequency changes from pure rotational to pure translational provided that the lead of screw is zero.

The computer program calculates the system transient response to specified initial conditions at the time of impact. System initial conditions for each shock test modeled are calculated in the Attachment. Displacements and accelerations of the suspended unit c.g. for discrete instants of

time are calculated for a total duration of 0.3 seconds. Responses are calculated at -40°F, +70°F, and +160°F.

The shipping container suspension system will limit the response of both the XL and 12 ft. nuclear fuel rod assemblies to approximately 6 G's when subjected to 10" vertical flat drops, 7 ft/sec end impacts, and 24" rotational drops. An examination of simulated shock response data for the 12 ft. nuclear fuel rod assembly reveals a peak response of 6.18 G's at -40°F for a 10" vertical flat drop. The computer analyses are based upon assumed infinitely rigid structures interfacing with each mount. In general, structural flexibility results in reduced unit accelerations since some kinetic energy at impact is absorbed and dissipated by these structures before it can be transmitted through the mounts to the unit.

It should be noted that an edgewise rotational drop was analyzed rather than a cornerwise rotational drop. Typically, the edgewise rotational drop is a more severe test and produces larger displacements and accelerations than the cornerwise rotational drop.

# ATTACHMENT
# DESIGN CRITERIA

Lord Kinematics
Division of Lord Corporation
Erie, Pennsylvania

SHIPPING CONTAINER SUSPENSION SYSTEM DESIGN CRITERIA

Customer: Westinghouse Electric Corporation
Pittsburgh, Pennsylvania

Date 6/01/78

Unit: XL Nuclear Fuel Rod Assembly

1. Suspended Weight: 5187. Lbs.
2. Mass Moments of Inertia (lb-in-sec$^2$):

   A. Roll - 433.8
   B. Pitch - 31250.
   C. Yaw - 31550.

3. Fragility Factors:

   A. Shock - 6 G's @ -40°F/+70°F/+160°F @ C.G.
   B. Vibration - 6 G's @ -40°F/+70°F/+160°F @ C.G.

4. A. 10" Vertical Flat Drop
   B. 7 ft/sec End Impact
   C. 24" Rotational Drop

5. Vibration Design Requirements:

   N/A

6. Military Specifications which apply:

   MIL-C-5584C Amended

7. Environmental Requirements:

   Operating Temperature Range from -40°F to +160°F

8. Methods of Transportation Used:

   Truck, Rail, Ship, Air

Lord Kinematics
Division of Lord Corporation
Erie, Pennsylvania

SHIPPING CONTAINER SUSPENSION SYSTEM DESIGN CRITERIA

Customer: Westinghouse Electric Corporation
Pittsburgh, Pennsylvania

Date 6/01/78

Unit: 12 ft. Nuclear Fuel Rod Assembly

1. Suspended Weight: 4758. Lbs.
2. Mass Moments of Inertia (lb-in-sec$^2$):

   A. Roll - 399
   B. Pitch - 22800.
   C. Yaw - 23030.

3. Fragility Factors:

   A. Shock - 6 G's @ -40°F/+70°F/+160°F @ C.G.
   B. Vibration - 6 G's @ -40°F/+70°F/+160°F @ C.G.

4. A. 10" Vertical Flat Drop
   B. 7 ft/sec End Impact
   C. 24" Rotational Drop

5. Vibration Design Requirements:

   N/A

6. Military Specifications which apply:

   MIL-C-5584C Amended

7. Environmental Requirements:

   Operating Temperature Range from -40°F to +160°F

8. Methods of Transportation Used:

   Truck, Rail, Ship, Air

Lord Kinematics
Division of Lord Corporation
Erie, Pennsylvania

SHIPPING CONTAINER SUSPENSION SYSTEM DESIGN CRITERIA

Customer: Westinghouse Electric Corporation
Pittsburgh, Pennsylvania

Date 6/01/78

Unit: XL Nuclear Fuel Rod Assembly

1. Proposed System Comprises: 24 Pieces of Lord P/N J-5735-64
2. Mount Locations and Orientations:
3. Calculated Shock Performance:

A. 10" Vertical Flat Drop

| ACCELERATION | DEFLECTION |
|---|---|
| 5.9 G's @ -40°F @ C.G. | 2.65" @ -40°F @ C.G. |
| 4.5 G's @ +70°F @ C.G. | 3.45" @ +70°F @ C.G. |
| 4.2 G's @+160°F @ C.G. | 3.74" @+160°F @ C.G. |

B. 7 ft/sec End Impact

| ACCELERATION | DEFLECTION |
|---|---|
| 5.6 G's @ -40°F @ C.G. | 2.54" @ -40°F @ C.G. |
| 4.3 G's @ +70°F @ C.G. | 3.31" @ +70°F @ C.G. |
| 4.0 G's @+160°F @ C.G. | 3.59" @+160°F @ C.G. |

C. 24" Rotational Drop

| ACCELERATION | DEFLECTION |
|---|---|
| 5.8 G's @ -40°F @ C.G. | 2.59" @ -40°F @ C.G. |
| 4.4 G's @ +70°F @ C.G. | 3.37" @ +70°F @ C.G. |
| 4.1 G's @+160°F @ C.G. | 3.66" @+160°F @ C.G. |

4. Recommended Minimum Clearances Between Unit and Container:

A. Bottom - 8.0"
B. Top - 4.5"
C. Ends - 4.5"
D. Sides - 4.38"

5. Resonant Transmissibility: 6.0
6. Assumptions: Rigid Unit, Rigid Container

Lord Kinematics
Division of Lord Corporation
Erie, Pennsylvania

SHIPPING CONTAINER SUSPENSION SYSTEM DESIGN CRITERIA

Customer: Westinghouse Electric Corporation
Pittsburgh, Pennsylvania

Date 6/01/78

Unit: 12 Ft. Nuclear Fuel Rod Assembly

1. Proposed System Comprises: 24 Pieces of Lord P/N J-5735-64
2. Mount Locations and Orientations:
3. Calculated Shock Performance:

A. 10" Vertical Flat Drop

| ACCELERATION | DEFLECTION |
|---|---|
| 6.2 G's @ -40°F @ C.G. | 2.54" @ -40°F @ C.G. |
| 4.7 G's @ +70°F @ C.G. | 3.31" @ +70°F @ C.G. |
| 4.4 G's @+160°F @ C.G. | 3.59" @+160°F @ C.G. |

B. 7 ft/sec End Impact

| ACCELERATION | DEFLECTION |
|---|---|
| 5.9 G's @ -40°F @ C.G. | 2.43" @ -40°F @ C.G. |
| 4.5 G's @ +70°F @ C.G. | 3.17" @ +70°F @ C.G. |
| 4.1 G's @+160°F @ C.G. | 3.44" @+160°F @ C.G. |

C. 24" Rotational Drop

| ACCELERATION | DEFLECTION |
|---|---|
| 6.1 G's @ -40°F @ C.G. | 2.52" @ -40°F @ C.G. |
| 4.7 G's @ +70°F @ C.G. | 3.28" @ +70°F @ C.G. |
| 4.3 G's @+160°F @ C.G. | 3.56" @+160°F @ C.G. |

4. Recommended Minimum Clearances Between Unit and Container:

A. Bottom - 8.0"
B. Top - 4.5"
C. Ends - 4.5"
D. Sides - 4.38"

5. Resonant Transmissibility: 6.0
6. Assumptions: Rigid Unit, Rigid Container

# APPENDIX 2-4
# CALCULATIONS AND EVALUATIONS RELATING TO ASSESSMENT OF NORMAL CONDITIONS OF TRANSPORT

## ASSESSMENT OF NORMAL CONDITIONS OF TRANSPORT

The MCC containers satisfy the performance requirements specified in Subpart F of 10CFR71 for normal conditions of transport. This regulatory compliance is demonstrated in the following subsections where each normal condition is addressed and shown to meet the applicable regulatory criteria.

### 2-3.1 Heat

The thermal evaluation of the MCC containers for the normal heat condition specified in §71.71(c)(1) is presented in this section. Since there is no internal heat generation, a maximum package temperature of 200°F will be conservatively assumed.

#### 2-3.1.1 Summary of Pressures and Temperatures

The MCC containers are limited to the transport of unirradiated, low enriched uranium, nuclear reactor core assemblies. During normal conditions of transport, the container will not experience temperatures significantly above ambient temperature. For the normal condition of heat per §71.71(c)(1), the maximum temperature of the MCC container components is less than 200°F.

The MCC containers are not designed to function as pressure vessels. The fuel assemblies do not generate gasses which could pressurize the MCC container. In addition, the seal between the two halves of the container is only a dust seal and is not a pressure seal. Therefore, the MCC containers will not experience a pressure loading incident to normal transportation.

#### 2-3.1.2 Differential Thermal Expansion

As discussed in Section 2-3.1.1, the outer shell of the MCC containers will operate at a maximum temperature of less than 200°F during normal transportation. This temperature occurs in the outer shells which are isolated from the internal strongback structures by elastomer vibration isolators. Because of this isolation, no significant effects due to differential thermal expansion will occur between the internal structures and the outer shells.

For the outer shells, the stress due to insolation and 100°F still air is minimal since there are no constraints on the package. The amount of thermal growth which is expected is determined as follows:

$$\Delta L = \alpha(T_2 - T_1)(L)$$

where:

| | | |
|---|---|---|
| $\Delta L$ | = | Change in package length, in. |
| $\alpha$ | = | mean coefficient of thermal expansion |
| | = | $6.57 \times 10^{-6}$ in/in - °F for carbon steel at 150°F |
| $T_2$ | = | Maximum package temperature = 200°F |

$T_I$ = Package initial temperature = 70°F (assumed)

L = Maximum overall package length = 220.0 in.

Solving the preceding equation yields a maximum outer shell thermal growth of 0.188 in. This amount of growth is easily accommodated by the vibration isolators which separate the internal structures and the outer shells.

Based on the preceding results, differential thermal expansion is negligible for the MCC container components.

#### 2-3.1.3 Stress Calculations

The MCC containers are transported in a non-constrained, non-pressurized state. Therefore, the containers will not develop any significant stresses due to normal conditions of transport for heat per §71.71(c)(1).

### 2-3.2 Cold

For the cold condition of §71.71(c)(2), a -40°F (-40°C) steady state ambient temperature will result in a uniform temperature throughout the package since there is no internal heat generation. The materials of construction for the container are not adversely affected by this temperature condition.

Brittle fracture of the materials used in the MCC containers is not a concern. The critical component of the design (the clamp frame arms) is fabricated from ASTM A240 Type 304 austenitic stainless steel plate. This material does not undergo a ductile-to-brittle transition in the temperature range of interest and therefore, is safe from brittle fracture. The clamp frame systems are also a redundant system. Redundant systems are generally not considered as fracture-critical components because multiple load paths exist. In addition, the thicknesses of the components which use non-austenitic materials are less than 0.4 in. Per NUREG/CR-1815, brittle fracture of Category III materials (which the MCC containers fall under) which are less than 0.4 in. in thickness is not a problem.

### 2-3.3 Pressure

The effect of the reduced external pressure of 3.5 psia (i.e., 11.2 psig internal pressure), per §71.71(c)(3), is evaluated for the outer shell of the containers. These calculations are very conservative considering the MCC containers are not pressure vessels and differential pressure states will not exist. In addition, the outer shell stiffening angles are conservatively ignored in the calculation. The bounding case used for demonstration is the model MCC-3 container. The circumferential and longitudinal stresses, $\sigma_c$ and $\sigma_L$ respectively, in the MCC-3 outer shell are calculated as:

$$\sigma_c = \frac{PR}{t} \qquad \sigma_L = \frac{PR}{2t}$$

where:

| | | |
|---|---|---|
| P | = | 11.2 psig |
| R | = | 20.67 in. |
| t | = | 0.089 in. |

Substituting the above values results in the following stress levels:

$$\sigma_c = 2.60\,\text{ksi}\ \sigma_L = 1.30\,\text{ksi}$$

These stress levels will have negligible effect on the outer steel shell which is fabricated from mild carbon steel. Similar results exist for the MCC-4 container.

For the pressure condition of §71.71(c)(4), the MCC container will be exposed to an external pressure of 5.3 psig. It can be easily demonstrated that the MCC-3 container can withstand this external pressure by conservatively assuming a thin-walled pressure vessel with a length equivalent to the longest span of the outer shell between circumferential stiffeners and neglecting the stiffening effect of the angle flange between the two halves of the outer body. For this analysis, the longest unsupported shell length occurs in the middle of the container upper assembly. Per Code Case N-284, Section III, Division 1, Class MC of the ASME Boiler and Pressure Vessel Code, the outer shell may be analyzed as a shell under axial compression plus hoop compression. For this case (§1713.1.1(b)), the following interaction equation must be satisfied:

$$\frac{\sigma_{\phi s} - 0.5\,\sigma_{heL}}{\sigma_{\phi cL} - 0.5\,\sigma_{heL}} - \left(\frac{\sigma_{\theta s}}{\sigma_{heL}}\right)^2 \leq 1.0$$

where:

| | | |
|---|---|---|
| $\sigma_{\phi}$ | = | $P(R/t)[(FS)/(2\alpha_{\phi L})]$ |
| $\alpha_{\phi L}$ | = | $\sigma_y(10^{-5}) - 0.033$ |
| $\sigma_{\phi s}$ | = | $P(R/t)[(FS)/(0.8)]$ |
| $\sigma_{\phi cL}$ | = | $(0.605)(t/R)E$ |
| $\sigma_{heL}$ | = | $(C_{heL})(t/R)E$ |
| $C_{heL}$ | = | $[0.92/(M_{\phi} - 0.636)]$ |
| $M_{\phi}$ | = | $L_{\phi}/[(R)(t)]^{1/2}$ |
| P | = | 5.3 psig |
| $L_{\phi}$ | = | Length of unstiffened shell = 41.25 in. |

| | | |
|---|---|---|
| $\sigma_y$ | = | Tensile yield strength of shell = 30,000 psi |
| E | = | Young's Modulus = 29.0 x $10^6$ for carbon steel |
| R | = | Outer radius of shell = 20.62 in. |
| t | = | outer shell thickness = 0.089 in. |
| FS | = | Factor of Safety = 2.0 |

Solving the above interaction equation yields a value of 0.668, which satisfies Code Case N-284 for the §71.71(c)(4) pressure condition. Similar results are obtained for the MCC-4 container.

In summary, the MCC containers can easily withstand the reduced and increased pressure conditions of §71.71(c).

### 2-3.4 Vibration

The shock mount system of the MCC containers is designed to limit the internal structure to a maximum shock load of 6 g's during normal transportation conditions. For this reason, a static 6 g design load is conservatively used to evaluate the MCC containers for stresses due to normal vibration loads per §71.71(c)(5).

The stresses in the container outer shells are conservatively calculated by evaluating the container as a simply supported beam supported at its ends, as shown in Figure 2-4-1. The mass of the package is assumed to be evenly distributed along its length. The circumferential shell stiffeners are conservatively ignored in these calculations. For the bounding case, the maximum gross weight of the MCC-3 container (W) is 7,544 lbs. Assuming a uniform 6 g load over the length of the container, the bending stress ($\sigma_b$) in the container outer shell is then:

$$\sigma_b = \frac{M(c)}{I_{shell}}$$

where:

| | | |
|---|---|---|
| M | = | $6(\omega)L^2/8 = 6WL/8$ |
| $\omega$ | = | Weight per unit length |
| L | = | Overall package length = 192.0 in. |
| c | = | 20.625 in |
| $I_{shell}$ | = | $\pi D^4/64 = 147{,}362\ in^4$ |
| D | = | Outer diameter of shell = 41.25 in. |

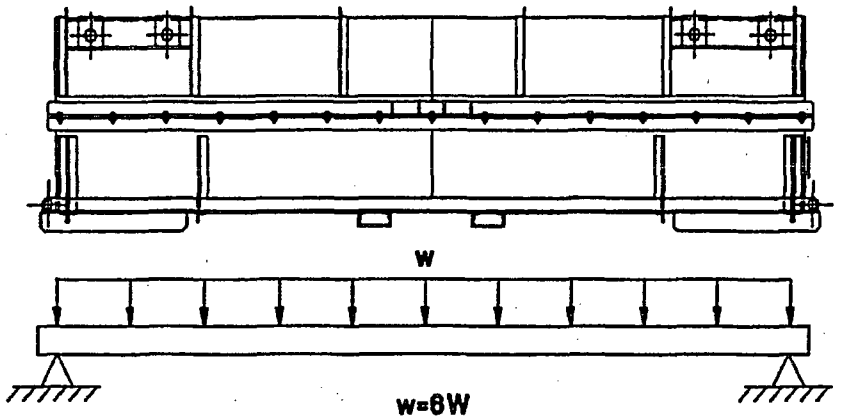


**Figure 2-4-1 MCC Outer Shell Vibration Model**

Substituting the above values yields a bending stress of 0.15 ksi. The combined membrane plus bending stress ($\sigma_T$) for vibration plus pressure (assuming all stresses are directly additive) is 4.05 ksi. The allowable stress, $S_a$, for the outer shell is 30.0 ksi. Therefore, the outer shell Margin of Safety (M.S.) is:

$$M.S. = (S_a/\sigma_T) - 1 = (30.0/4.05) - 1 = +6.41$$

The clamp frame and clamp frame connections are the critical internal structure components for stresses due to normal operation vibration loads. The clamp frame is conservatively evaluated as a simply supported beam 13 inches in length, which represents the approximate clear span of the clamp frame. The clamp frame is loaded by the accelerated mass of the fuel applied to the clamp frame as a point load. The load is applied at the location of the fuel pad support bolt. The accelerated mass of the fuel is conservatively assumed to be carried equally between six of the seven clamp frames for the MCC-3 container with the bounding fuel assembly weight of 1,650 lbs (the MCC-4 container with heavier fuel assemblies has a total of nine frames and is bounded by the MCC-3 frame loading). This assumption is to account for the effect of the various spacing arrangements of the clamp frames which exist for the different fuel assemblies.

$$F = \frac{(1{,}650\,\text{lbs})(6\,\text{g's})}{6\,\text{clamp frames}} = 1{,}650\,\text{lbs}$$

Assuming simply supported ends with an applied load in the center, the bending stress ($\sigma_b$) in the clamp frame is calculated as:

$$\sigma_b = \frac{M(c)}{I_{clamp}}$$

where:

| | | |
|---|---|---|
| M | = | $F(\ell/2)/2$ |
| c | = | 2.0/2 = 1.0 in. |
| $I_{clamp}$ | = | $bh^3/12 = 1.25(2)^3/12 = 0.833\ in^4$<br>where: b and h are width and height of clamp frame cross section |
| $\ell$ | = | effective clamp frame span = 13.0 in. |

Substituting the appropriate values in the above equation yields a bending stress of 6.44 ksi. Because the clamp frames can only be loaded by inertia forces when the package is in the normal orientation, this stress represents the total stress on the clamp frame. No other loads are combined with the vibration load on the internal structure clamp frames.

The allowable bending stress ($S_a$) for the clamp frame is 30.0 ksi. Therefore the Margin of Safety is:

$$M.S. = (S_a/\sigma_b) - 1 = (30.0/6.44) - 1 = +3.66$$

The shear load, $F_v$, on the connection pins is conservatively assumed to be equal to the maximum applied load of 1,650 lbs., and that the full load is carried by one connection. Based on an allowable shear yield stress of 98.1 ksi (0.577 of minimum tensile yield stress for ASTM A564 Type 630 material), the allowable shear strength, $F_a$, for the clamp frame connection pins in double shear is 18,129 lbs. Therefore, the connection pin Margin of Safety is:

$$M.S. = (F_a/F_v) - 1 = (18129/1650) - 1 = +9.99$$

The clamp frames connect into pivot mounts which in turn connect to the Unistrut channels attached to the internal structure. The maximum tensile stress in the pivot mounts, due to vibration loads, will occur in the side pivot mount, which is slightly thinner than the upper pivot mount. The full reaction load of 1,650 lbs. is conservatively assumed to carried by the lower pivot mount. The load, F, in each leg of the pivot mounts is then:

$$F = \frac{1{,}650}{2} = 825\ \text{lbs}$$

Assuming the load is distributed across the width of the connection pins, the bearing stress, $\sigma_B$, on the pivot mount is:

$$\sigma_B = \frac{F}{A_B}$$

where:

$A_B$ = Bearing Area = (D)(w)

D = diameter of connection pin = 7/16-in.

w = pivot mount bearing surface width = 0.365 in.

Solving for the bearing stress yields a stress level of 5.17 ksi. The allowable bearing stress, $S_a$, in the pivot mounts is 30.0 ksi. Therefore, the pivot mount Margin of Safety is:

$$M.S. = (S_a/\sigma_B) - 1 = (30.0/5.17) - 1 = +4.80$$

The load on each of the two Unistrut connection bolts is 825 lbs. This load conservatively assumes that only one pivot mount carries the vibration reaction load and that the load is equally distributed between the two bolts connecting each pivot mount. The manufacturer's recommended allowable tensile load ($F_{bolt}$) for the P-2381-5 Unistrut stud nuts is 2,000 lbs/stud. The Margin of Safety against pull-out of the two Unistrut bolts is then:

$$M.S. = (2)(F_{bolt})/(F) - 1 = 4000/825 - 1 = +3.85$$

### 2-3.5 Compression

Per §71.71(c)(9), packages which weigh up to 11,000 lbs. (5,000 kg) must be subjected, for a period of 24 hours, to a compressive load applied uniformly to the top and bottom of the package in the position in which the package would normally be transported. The compressive load must be the greater of the following: (i) The equivalent of five times the weight of the package; or (ii) the equivalent of 12.75 kilopascal (1.85 lb/in$^2$) multiplied by the vertically projected area of the package.

For the MCC-4 container (bounding case), five times the weight of the package is 52,765 lbs. The projected area of the container, $A_p$, is calculated as:

$$A_P = (D_{max})(L_{max})$$

where:

$D_{max}$ = Maximum overall package width = 44.5 in.

$L_{max}$ = Maximum overall package length = 226.0 in.

The projected area is calculated to be 10,057 in$^2$. Therefore, the total load for a pressure of 1.85 psi is:

$$F_P = (1.85)(10{,}057) = 18{,}605\text{lbs.} < 5(W) = 52{,}765\text{ lbs.}$$

Therefore, the controlling load is five times the package weight. The package is transported in a horizontal position, resting on the stacking frames on the bottom ends of the package. Therefore, the

maximum stress due to the compression load is a bending stress in the outer shell. The resulting stress in the outer shell is conservatively evaluated by assuming the package acts as a simply supported beam. The bending stress, $\sigma_b$, is then calculated as:

$$\sigma_b = \frac{M(c)}{I_{shell}}$$

where:

| | | |
|---|---|---|
| M | = | $5(\omega)L^2/8 = 5WL/8 = 1{,}490{,}611$ in-lbs |
| L | = | 226.0 in. |
| c | = | 20.625 in. |
| $\omega$ | = | Load per unit length |
| $I_{shell}$ | = | 147,362 $in^4$ |

The calculated bending stress resulting from a compressive load per §71.71(c)(9) is 0.21 ksi. The allowable bending stress for the container shell is 30.0 ksi. Therefore, it can then be concluded that the MCC containers comply with the requirements of this subsection.

# APPENDIX 2-5
# CALCULATIONS AND EVALUATIONS RELATING TO ASSESSMENT OF HYPOTHETICAL ACCIDENT CONDITIONS

# APPENDIX 2-5.1
# CALCULATIONS

## ASSESSMENT OF HYPOTHETICAL ACCIDENT CONDITIONS

Westinghouse MCC containers, when subjected to hypothetical accident conditions specified in §71.73, meet the performance criteria specified in Subpart E of 10CFR71. This compliance is demonstrated in the following subsections where each accident condition is addressed and shown to meet the applicable design criteria previously discussed in Section 2.1.2 of the application.

As stated in Section 2.1.2 of the application, the post accident configuration cannot be more reactive than analyzed in Section 6.0. To prevent it from becoming more reactive, the spacing between fuel assemblies from adjacent packages, when in parallel planes, must not be allowed to be reduced below eight (8) inches. This spacing is accomplished by ensuring that the fuel assemblies are restrained by the strongback and that the outer shell remains intact. If the outer shell was separated from the package, the adjacent fuel package clamp frames could lay between the clamp frames of the adjacent package. The fuel spacing, when the fuel is corner-to-corner, can be slightly closer. The fuel must be restrained such that the gadolinium neutron absorber plates stay between the fuel bundles.

### 2-4.1 Free Drop

§71.73(c)(1) of Subpart F requires that a package withstand a drop from a height of 30-feet (9 meters) onto a flat, unyielding, horizontal surface. The package is to strike the surface in a position for which maximum damage is expected. Per §71.73(b), the initial temperature for the drop is to be the worst case constant ambient air temperature between -20°F and 100°F. Brittle fracture of the MCC container materials is not a critical issue through the temperature range of concern as shown in Section 2.6.2. Therefore, the worst case temperature condition for the drop test is 100°F. This section demonstrates compliance of the MCC containers, with the 30-foot drop test condition, by analysis and prototype testing. The analyses presented determine the ability of the containers to absorb the kinetic energy associated with the 30-foot drop. The prototype testing is confirmation of the package's ability to maintain a subcritical geometry following the 30-foot drop. The drop orientations considered in the analyses and utilized for the prototype tests include the following:

- (Flat) side drop onto package top
- Side drop with slapdown onto package clamp frames
- (Flat) side drop onto package closure

For analytic purposes, the weights of the MCC-3 and MCC-4 containers are considered to be as shown in Section 1.2.1. For purposes of this evaluation, the MCC-3 container, when loaded with its maximum fuel assembly weight of 3,300 lbs., is the bounding case and is utilized for demonstrating regulatory compliance. (See the justification provided in Section 2-4.5.)

#### 2-4.1.1 End Drop

The end drop is not a controlling orientation for the MCC containers to maintain a sub-critical geometry. For this orientation, the end of the MCC outer shell and the end supports of the internal strongback will crush. Any residual kinetic energy will be absorbed by axial crushing of the fuel assemblies. Therefore, this axial damage will result in a less reactive geometry for criticality control. In addition, the critical components of the MCC containers, the clamp frames, are redundant (i.e., a single failure does not cause

a failure of the package to maintain a sub-critical geometry). Except for the gadolinium oxide absorber plates, the expected deformations and critical load paths of the side drops will be more crucial for the MCC container design to maintain a sub-critical geometry. Demonstration of the gadolinium oxide absorber plates' ability to withstand the impact forces associated with the 30-foot drop events is discussed in Appendix 1-7. Additionally, the prototype containers which were utilized in the drop tests had the gadolinium oxide absorber plates installed. The results of the drop tests are discussed in Appendix 2-5.3.

### 2-4.1.2 Side Drops

#### 2-4.1.2.1 *Side Drop onto Container Top*

The internal structure of the MCC-3 container is attached to the outer shell by a series of shock mounts which are intended to limit normal condition transportation events to below 6 g's. Since the shock mount system is relatively soft (with the shear stiffness of the combined shock mounts at 5,160 lb/in), the system will not significantly affect the impact velocity of the internal structure. For conservatism, the internal structure is assumed to impact the drop pad at full velocity. Because of the "softness" of the shock mount system, the outer shell and internal structure may be decoupled and will act independently during the impact from the 30-foot accident drop events.

The deformation of the outer shell assembly due to the 30-foot accident drops is not of critical concern for the function of the MCC containers. As previously discussed, the primary purpose of the MCC container is to maintain a minimum spacing between adjacent packages for criticality control. Of critical concern is the ability of the internal structure to absorb the energy of its accelerated mass without catastrophic failure or deformations which result in less than the allowable criticality spacing. The outer shell deformations are calculated herein to verify the ability of the outer shell to fully absorb the kinetic energy of its accelerated mass due to the 30-foot drop without catastrophic failure.

**Outer Shell Assembly Deformations**

The kinetic energy associated with the outer shell assembly upon impact is:

$$E_{shell} = W_{shell}(h)$$

where:

$W_{shell}$ = weight of the outer shell assembly = 2,280 lbs.

h = drop height = 30 feet (360 inches)

The kinetic energy of the outer shell is 820,800 in-lbs. This energy will be absorbed by the strain energy primarily associated with the deformation of the 2-in. x 2-in. x ¼-in. angle circumferential stiffeners (refer to Figure 2-5.1-1). The energy absorption of the outer shell skin (t = 0.089 in.) is neglected in this calculation.

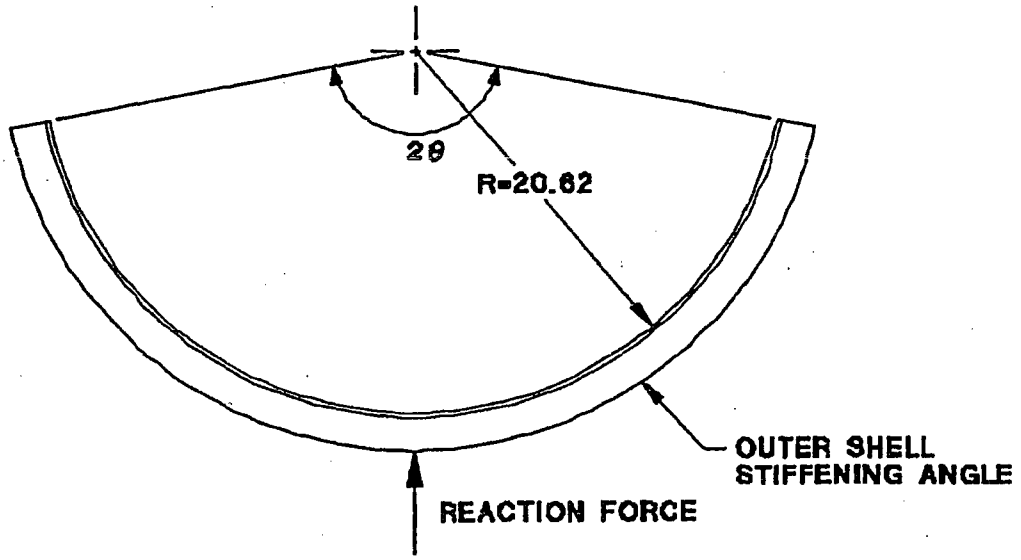


**Figure 2-5.1-1 Deformation of Circumferential Stiffener**

The initial impact of the outer shell will be on the circumferential stiffeners. The primary energy absorption occurs with the localized buckling of the angle stiffeners. For this condition, the stiffeners can be analyzed as a narrow rectangular beam (length equal to the distance between the stacking brackets, or 10 inches) having fixed ends with a concentrated applied load at the center of the beam. Based on the principles found in Table 34, Case 13, Formulas for Stress and Strain, Fifth Edition by Roark and Young, the force required to buckle the plate (P∠) may be approximated per the following:

$$P_L = \left[\frac{4.43\,b^3 d}{L2}\right]\sqrt{\left(1 - 0.63\frac{b}{d}\right)E\,G}$$

where:

| | | |
|---|---|---|
| b | = | thickness of angle = ¼ - in. |
| d | = | height of free edge of angle = 1-¾ in |
| L | = | effective length of angle ≈ 10 in |
| E | = | Young's Modulus = $29.0 \times 10^6$ psi |
| G | = | Modulus of Rigidity = $11.5 \times 10^6$ psi |

Substituting the preceding terms into the above equation determines that the applied force to buckle the angle stiffener is 21,102 lbs. The total force required to buckle all of the stiffeners except the end angles (total number of stiffeners is 4) is 84,408 lbs. Since the end angle stiffeners are located near the end plates

of the container, these stiffeners will tend to crush rather than buckle. The force associated with crushing of these angles is given by:

$$F_{L\ crush} = (2)\,\sigma_{flow}\,(A_L)$$

where:

$\sigma_{flow}$ = flow stress = ½ ($\sigma_y + \sigma_{ult}$)
= ½(30,000 + 54,000) = 42,000 psi

$A_\angle$ = angle crush area = (¼)(10) = 2-½ in²

Substituting the above values yields a crushing force for the two end angle stiffeners of 210,000 lbs. Using the principle that force multiplied by distance equals energy, the total deformation which is required to absorbed the kinetic energy of the outer shell may be determined per the following:

$$\delta_{crush} = \frac{E_{shell}}{(4)(P_\angle) + F_{\angle\ crush}} = \frac{820{,}800}{[(4)(21{,}102) + 210{,}000]} = 2.79 \text{ inches}$$

The gross deformation is then equal to $\delta_{crush}$ plus the angle leg length, or 4.54 inches. Therefore, the total outer shell kinetic energy is absorbed by approximately 4-½ inches of deformation of the circumferential stiffeners. Testing of a MCC-3 prototypic container has shown that the circumferential stiffeners deform approximately 3-4 inches for the 30-foot drop onto the container top (refer to Appendix 2-5.3 for details of the drop tests). Since the deformed outer shell assembly is maintained around the fuel assemblies, the minimum separation distance to maintain a subcritical geometry is still in place.

**Internal Assembly Deformations**

As noted previously, the internal structure may be decoupled from the outer shell assembly during the accident drops. Therefore, the response of the internal structure to the 30-foot side drop is evaluated by assuming that the kinetic energy associated with mass of the internal structure is absorbed solely by the strain energy of the internal structure deformations.

The kinetic energy associated with the internal structure assembly upon impact is:

$$E_{internal} = W_{internal}\,(h)$$

where:

$W_{internal}$ = (internal structure + fuel assembly weight)
= 5,264 lbs

h = drop height = 30 feet (360 inches)

The calculated kinetic energy of the internal assembly is 1.895 x 106 in-lbs. This energy will be absorbed by the deformation of the following internal structure components (refer to Figure 2-5.1-2):

- Crush of swing bolts
- Crush of clamp frame connections/Unistrut channels
- Crush of fuel assembly grids

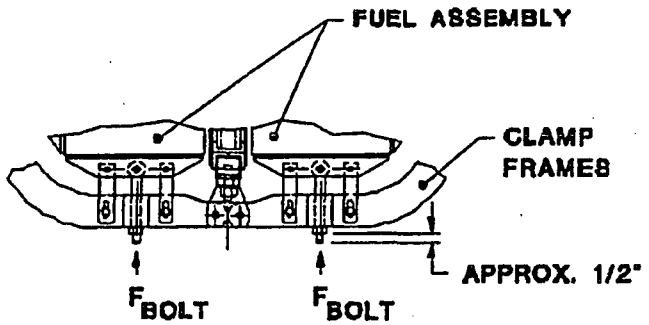


**Figure 2-5.1-2 Internal Structure Components**

Initial impact of the internal structure is on the swing bolts which extend through the clamp frames. The force associated with the flow of the fourteen swing bolts is calculated as:

$$F_{bolt} = (14)\ \sigma_{flow}\ (A_{bolt})$$

where:

$\sigma_{flow}$ = 42,000 psi

$A_{bolt}$ = tensile area of bolt = 0.1419 $in^2$

The total force for the flow of 14 swing bolts is 83,437 lbs. Based on a maximum available crush depth of 1-½ inch (end crush plus distance of snubber movement), the energy absorbed by the flow of the swing bolts is calculated as:

$$E_{bolt} = (1.5\,\text{inch})(F_{bolt}) = 125,156\,\text{inch - lbs}$$

The internal structure kinetic energy which remains following the flow of the swing bolts is:

$$E_{remaining} = (E_{internal}) - (E_{bolt}) = 1.77 \times 10^6\ \text{inch - lbs}$$

After the swing bolt ends flow, the pressure pads will start to apply impact forces to the fuel assembly grid pads. As the force increases, the snubber arms will slide approximately ½-inch until they contact the clamp frames. At this point, crushing of the fuel assemblies will commence. Compressive impact forces

will also be applied to the clamp frame connections to the Unistrut channels. The initial force required to crush the fuel assemblies at the grid locations is approximately 6,000 lbs per pressure pad, or 84,000 lbs total (Ffuel). The 6,000 lbs per pressure pad to crush the fuel (as tested by Westinghouse) is far below the 115,000 plus pounds it would require to flow each snubber. As the fuel assemblies are crushed, the fuel element spacing is reduced until there is, effectively, metal-to-metal contact between all of the fuel elements and the pressure pads. At this point, the fuel assemblies become very stiff and absorb the remaining kinetic energy of the fuel (approximately 1.19 x 106 in-lbs) as strain energy in the assemblies. The maximum applied force at the pressure pads is limited to the force required to flow the snubber arms at each pressure pad location. At all times, there will be a minimum spacing of the arm thickness, plus snubber length plus pressure pad thickness minus any plastic deformation of the snubber, or over four (4) inches per fuel assembly. The snubber plastic deformation is expected to be very small due to the elastic characteristics of the fuel assemblies. The sub-critical geometry is increased (i.e., lower criticality potential) by the crushing of the fuel because the fuel pin-to-fuel pin spacing is reduced, which lowers the moderation potential. This behavior was confirmed in the prototypical testing of the MCC-3 container (refer to Appendix 2-5.3). Note that the above analysis does not consider the energy absorbed by the flexure of the fuel assemblies between the pressure pads.

The remaining kinetic energy of the internal structure (approximately 496,000 in-lbs) is primarily absorbed by the center wall section and some flexure of the clamp frame at the side pivot mount/Unistrut channel. The upper pivot mount assembly is illustrated in Figure 2-5.1-3.

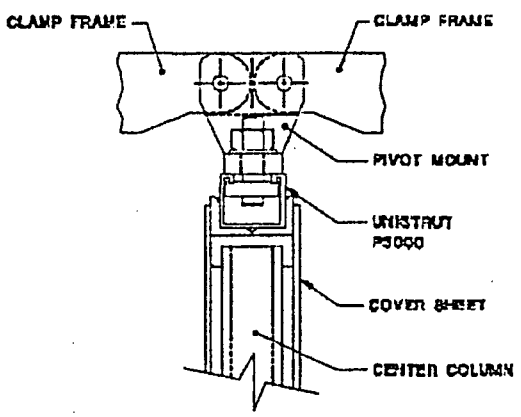


**Figure 2-5.1-3 Upper Clamp Frame Attachment Detail**

Since the center section is significantly more rigid than the side pivot mount connection, the primary energy absorption will occur in the center wall section. The center wall assembly components will deform according to their relative stiffness. The initial impact to the center wall will first deform the upper pivot mount Unistrut attachment. The potential effective crush area, $A_{strut}$, is conservatively calculated based on

the contact area with the pivot mount. The force associated with the flow of the Unistrut channels at the seven upper pivot mount locations ($F_{strut}$) is calculated as:

$$F_{strut} = (7)\,(\sigma_{flow})(A_{strut})$$

where:

$\sigma_{flow}$ = 42,000 psi

$A_{strut}$ = Unistrut effective crush area = 1.16 $in^2$

From this expression, the force associated with the deformation of the Unistrut channels is estimated to be 341,040 lbs. The maximum available crush depth for the Unistrut channels is ½-inch. Therefore, the energy absorbed by the deflection of the upper Unistrut channel is calculated as:

$$E_{strut} = (F_{strut})\left(\frac{1}{2}\,\text{inch}\right) = 170{,}520\,\text{inch-lbs}$$

The remaining kinetic energy of the internal structure will be absorbed primarily by elastic deformation of the main center wall. This kinetic energy, $E_{wall}$ to be absorbed by the center wall deformation is approximately 325,480 in-lbs. Because of the high compressive stiffness of the center wall section (estimated to be greater than 3.0 x 107 lb/in), elastic and plastic deformations will completely absorb the remaining energy.

The force associated with the main center wall can conservatively be calculated by assuming an effective width for the cover plates equal to the length of the pivot mount of 5.34 inches. The internal structure center wall is built around six columns fabricated from 1-½ in. x 1-½ in. x ¼-in. rectangular tube, not including the end supports. The crush force of the center wall is calculated by distributing the strength of the six column supports in the center wall evenly to each of the clamp frame locations. Therefore, assuming all deformation as plastic and an effective crushing length of 5.34 inches at each clamp frame location, the center wall crush force, $F_{wall}$ is calculated as:

$$F_{wall} - (7)\sigma_{flow}\,(A_{wall})$$

where:

$\sigma_{flow}$ = 42,000 psi

$A_{wall}$ = effective crush area of the center wall
= $A_{plate} + A_{columns}$

$A_{plate}$ = effective crush area of cover plates
= 5.34(0.18)(2) = 1.92 $in^2$

$A_{columns}$ = effective crush area of column supports
= (6)(1.25)/7 = 1.07 $in^2$

Solving the above expression for the force in the wall yields a force of 879,060 lbs. The total deflection of the center wall can be calculated based on the remaining kinetic drop energy to be absorbed. The center wall deflection is calculated as:

$$\delta_{wall} = \frac{E_{wall}}{F_{wall}} = \frac{325{,}480}{879{,}060} = 0.370 \text{ inches}$$

The predicted deformation of the internal wall is acceptable because the clamp frames are in compression at the upper pivot mount. Note that the design of the frame at each pivot mount allows the clamp frames to move relative to the ball-lock and lower connecting pins. This movement allows the clamp frames to bear directly on the inner surface of the pivot mounts without applying shear load to either the ball-lock or connecting pins, thus ensuring that the frames' connectivity to the internal strongback remains intact and continues to restrain the fuel. The center wall structure further encapsulates the gadolinium plates, which ensures criticality control within the MCC package between adjacent fuel assemblies. The ability of the gadolinium absorption plates to withstand the impact of a 30-foot drop event have been demonstrated by prototypical testing (refer to Appendix 1-7).

As the previous calculations demonstrate, the kinetic energy of the 30 foot drop can be conservatively absorbed by the strain energy associated with the deflection of the internal structure components. Note that the preceding analysis is conservative and that actual deformations will be significantly less than predicted here. This conservatism is due to the many different load paths which exist simultaneously within the package and the elastic behavior of these paths.

The actual loadings which the internal supports will see during the drop can be approximated by looking at the crush distance they will experience. As shown above, the total crush of the internals is over three inches. This degree of deformation implies a inertial loading of under 200 g's, which is conservative when considering the structure of the internals and the amount of elastic flexure in the system.

The center wall deformed very little in the actual drop (See Appendix 2-5.3). Stronger than minimum property materials in the test container, and other energy absorbing mechanisms, demonstrate the above analysis to be conservative.

#### 2-4.1.2.2 Side Drop with Slapdown onto Internal Clamp Frames

The container is evaluated for an oblique drop with a slap down on the clamp frames. This orientation will impart the greatest forces on the frames, and if failure occurs, free the fuel. Since the frames are redundant (seven per fuel assembly), a minimum of five clamp frames per assembly would have to fail completely to allow the fuel to move freely and potentially compromise the required spacing.

The impacts, both the initial and the slapdown will occur in localized area at both ends of the container. This will localize the damage but make it more extensive than seen in the above side drops.

Although the internal frame and fuel assemblies will generally behave independently from the outer shell assembly like the other drops evaluated, the concentrated impact area will cause some interaction. In the localized area more of the shell components will be deformed since the loads will not be spread out. Some of the outer shell components beneath the impact region of the internal structure will absorb energy from

the internal structure as well as the outer shell assembly. For this reason, the total energy of the system will be evaluated below.

From the scoping analysis performed in Appendix 2-5.2, it has been determined that the container orientation which will impart the maximum inertia forces on the clamp frames is inclined 30° from the horizontal plane. In addition, the container is rotated about its center axis 135° clockwise (refer to Figure 2-5.1-4). This orientation results in direct impact on the corner of the clamp frames on the primary impact as well as the secondary impact. Due to its smaller material sizes, it is expected that the upper end of the internal structure (i.e., end opposite the rotational end) would sustain greater damage than the lower end. Therefore, the orientation which maximum damage is expected would have the initial impact on the upper end of the internal structure. For this drop configuration, the total kinetic energy of the package ($E_{oblique}$) will be as follows:

$$E_{oblique} = W_{MCC}\left[H_{drop} + \left(\frac{L_{MCC}}{2}\sin\theta\right)\right] = 3.08 \times 10^{6} \text{ inch-lbs}$$

where:

| | | |
|---|---|---|
| $W_{MCC}$ | = | Gross weight of MCC-3 container = 7,544 lbs. |
| $L_{MCC}$ | = | Overall Length of MCC-3 container = 194.0 in. |
| $H_{drop}$ | = | Drop height = 360 in. |
| 0 | = | Oblique angle = 30° |

Based on the scoping analysis of Appendix 2-5.2, the relative amount of energy which is absorbed for each impact point can be determined. Basing the energy absorbed on the ratio of the impact forces, it is estimated that approximately 42% of $E_{oblique}$ will be absorbed by the initial (primary) impact, with the remainder of the kinetic energy absorbed by the deformation of the MCC container on the slapdown (secondary) impact. The energy absorption for each impact will be discussed separately.

**Initial Impact**

For the initial impact of the MCC container, the amount of energy which is estimated to be absorbed is $1.294 \times 10^{6}$ -lbs. This energy ($E_{initial}$) absorbed by the following mechanisms:

- Outer shell angle stiffener buckling
- Crushing of outer shell angle stiffener
- Buckling of outer shell end plate
- Straining of elastomer shock mounts by internal structure
- Connecting pin failure for the upper pressure bar
- Plastic hinge formation in angle corner assembly
- Crushing of edge of angle corner assembly
- Buckling of upper pressure bar

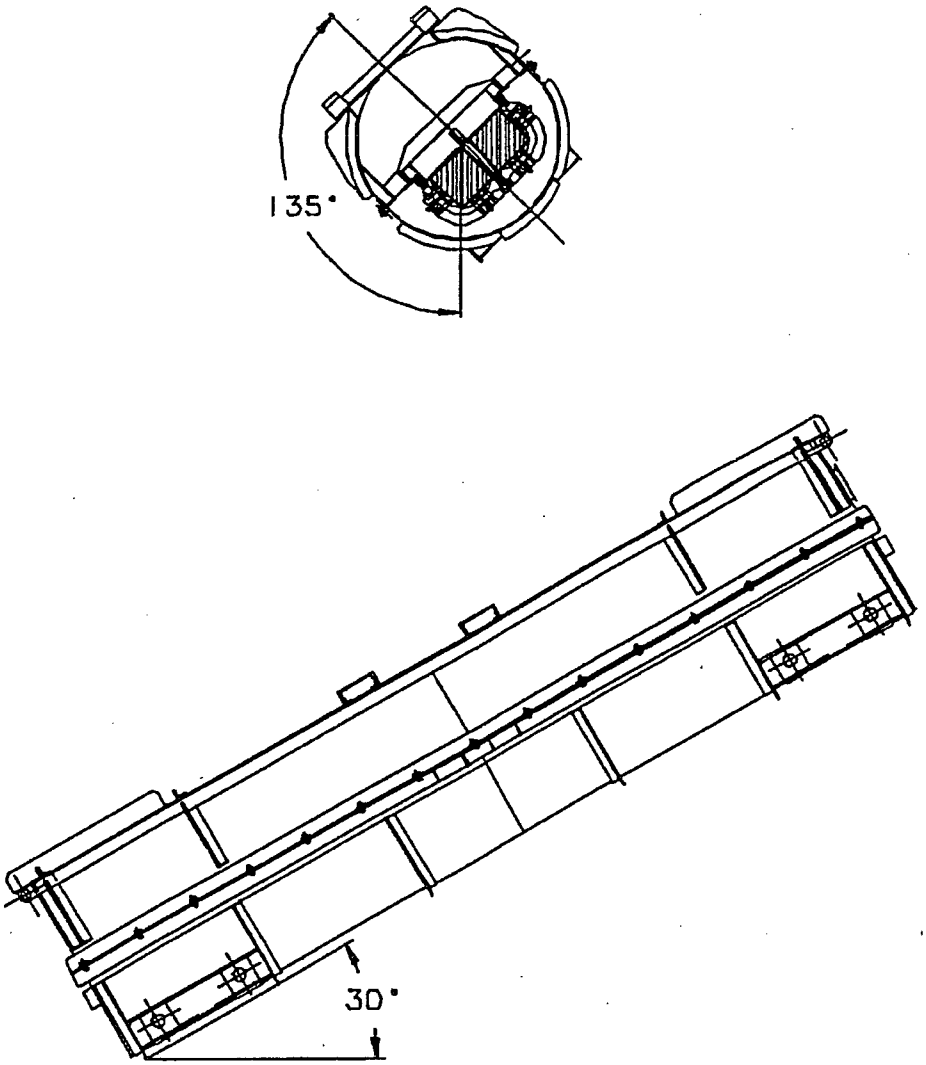


**Figure 2-5.1-4 Container Orientation onto Clamp Frames**

- Plastic hinge formation in end clamp frame
- Crushing of the end fuel assembly restraining bolts
- Sliding of the fuel assembly nearest the impact point

The amount of energy which each of these mechanisms will absorb is dependent on their stiffness and their relative location. The following analyses provide an approximate energy distribution based on simple calculations. The analyses is not intended to define the exact damage, but rather to demonstrate that these mechanisms have the capability to absorb the energy without significantly damaging the entire fuel assembly restraint system of the container.

The force require to buckle the outer shell 2-in. x 2-in. x ¼-in. stiffener angle has been previously estimated to be 21,102 lbs (refer to §2-4.1.2.1). The minimum distance which this force can be applied through is 7-in. Therefore, the energy associated with the buckling of the outer shell stiffener is:

$$E_{buckle} = (21{,}102)(7) = 147{,}714 \text{ inch - lbs}$$

As buckling occurs, the vertical leg of the angle will crush. The maximum crush is equal to the leg length minus the material thickness. The width of the angle segment which will crush is estimated to be approximately 20-in. Therefore, the energy for crushing the angle is expressed as follows:

$$E_{crush} = \sigma_{flow}(1/4 \text{ inch})(20 \text{ inches})\,\delta_{crush}$$

where:

$\sigma_{flow}$ = 42,000 psi

$\delta_{crush}$ = leg length = 1.75 in.

Solving for the crush energy yields 367,500 in-lbs. The total energy absorption of the stiffening angle is then the sum of the two mechanisms:

$$E_L = E_{buckle} + E_{crush} = 515{,}214 \text{ inch - lbs}$$

The buckling of the outer shell assembly end plate may be approximated by a fixed-edged plate with a compressive load applied uniformly. The critical unit buckling stress ($\sigma_{cr}$) for this case is presented Table 35, Case 10b, Formulas for Stress and Strain, Fifth Edition by Roark and Young:

$$\sigma_{cr} = K\frac{E\,t^2}{f^2(1-v^2)}$$

where:

E = Young's Modulus = $29.0 \times 10^6$ psi

t = thickness of end plate = 0.134 in.

| | | |
|---|---|---|
| r | = | outer radius of plate = 20.62 in. |
| K | = | shape factor = 7.22 |
| v | = | Poisson's ratio = 0.3 |

Substituting the preceding values into the above expression yields a compressive unit stress of 9,717 psi, which acts over the 20-inch length of the crush area. Therefore, the total force on the end plate is:

$$F_{end} = \sigma_{cr}(20\,\text{inch})\,t = 26{,}041\,\text{lbs}$$

The energy absorbed by the end plate buckling through the crush distance of 7-in. is then:

$$E_{end} = (7\,\text{inch})(F_{end}) = 182{,}287\,\text{inch - lbs}$$

At the instant of impact, the eighteen elastomer shock mounts will be strained by the inertia of the internal structure. From bench tests, it has been determined that the strain energy of a single shock mount is approximately 1,750 in-lbs per inch of deflection. Therefore, the total strain energy of the shock mounts is:

$$E_{elastic} = (18)(1{,}750)\delta_{internal} = 220{,}500\,\text{inch - lbs}$$

where:

| | | |
|---|---|---|
| $\delta_{internal}$ | = | 7-in. |

Following the straining of the elastomer shock mounts, the upper corner of the top closure assembly of the internal structure will impact the inside surface of the outer shell assembly. The top closure assembly components which will deform and absorb energy consists of a 2-in. x 2-in. x 3/16-in. angle, a 1.5-in. x 2.5-in. x ¼-in. tube, the upper ½-in. diameter connecting pin, and the upper 1.0-in. x 1.5-in. x 13-¼ in. pressure bar. The deformation and energy absorption of each of these separate pieces will be discussed individually.

The initial failure of the top closure assembly is expected to be the connecting pin. This pin is loaded in double shear for the drop orientation considered. Using the distortion energy theory, the maximum shear stress which will cause failure is 0.577 of the ultimate strength. Therefore, the failure load for the pin is expressed as follows:

$$F_{pin} = 2\left[0.577(\sigma_{ult})\left(\frac{\pi}{4}\right)d^2\right]$$

where:

| | | |
|---|---|---|
| $\sigma_{ult}$ | = | 54,000 psi |
| d | = | pin diameter = ½-in. |

The resultant force required to fail the connecting pin is 12,245 lbs. This force will act through a distance equal to the pin diameter. Therefore, the energy absorption of the pin is:

$$E_{pin} = F_{pin}(d_{pin}) = 6{,}123 \text{ inch - lbs}$$

Following the pin failure, the edge of the 2-in. x 2-in. x 3/16-in. angle will develop a plastic hinge as well as crush through the thickness of the angle. For plastic hinge formation, the bending stress will be equal to the plastic hinge stress:

$$\sigma_{plastic} = (SF)\sigma_y = \frac{M_{plastic}}{Z_{\angle}}$$

where:

| | | |
|---|---|---|
| $\sigma_y$ | = | 30,000 psi |
| SF | = | Plastic hinge shape factor ≈ 1.25 for angle |
| $M_{plastic}$ | = | plastic hinge moment = $F_{plastic}(d)$ |
| $Z_{\angle}$ | = | 0.190 $in^3$ |
| d | = | effective moment arm = 2.59 in. |

Solving the above equation for the force required to form a plastic hinge gives a value of 2,751 lbs. This force will act through a distance of approximately 1-in., which will absorb:

$$E_{hinge} = F_{hinge}(1\text{-inch}) = 2{,}751 \text{ inch - lbs}$$

The materials in the corner of the top closure assembly which will flow are the outer shell skin, the rectangular tube, and the 2-in. x 2-in. x 3/16-in. angle with the 1-½ in. x 1-½ in. x ¼-in. connection plates. The exact area of contact is dependent on the amount of flow and the impact angle. In addition, some of the material will bend out of the way rather than flow. For analytical purposes, an area of 3 $in^2$, which is slightly larger than the cross sectional area of the tube plus the angle, is assumed to be the average contact area. The crush depth ($\delta_{crush}$) is estimated to be approximately 1-½ in. Thus, the energy associated with this material flowing/crushing is:

$$E_{flow} = \sigma_{flow}(3 \text{ inch}^2)\,\delta_{crush} = 231{,}714 \text{ inch - lbs}$$

where:

| | | |
|---|---|---|
| $\sigma_{flow}$ | = | 42,000 psi |

The total energy associated with the corner angle assembly is then:

$$E_{corner} = E_{hinge} + E_{flow} = 234{,}465 \text{ inch - lbs}$$

Buckling of the upper pressure bar can be determined from classical buckling expressions. Since the slenderness ratio of the pressure bar is low, the buckling force ($F_{buckle}$) will be based on the parabolic formula:

$$F_{buckle} = A\left(\sigma_y - K\left(\frac{l}{k}\right)^2\right)$$

where:

| | | |
|---|---|---|
| $\sigma_y$ | = | 30,000 psi |
| A | = | Cross-sectional area = 1.5 in$^2$ |
| K | = | $(\sigma_y/2)^2(1/nE)$ |
| E | = | Young's modulus = 29.0 x $10^6$ psi |
| l | = | unrestrained length of pressure bar = 12.13 in. |
| k | = | radius of gyration of pressure bar = 0.434 in. |
| n | = | end-condition factor = 1.0 (fixed-fixed ends) |

The calculated buckling force for the pressure bar is 44,307 lbs. This force will act through a distance equal to the crush of the corner assembly or 1.5 in. Therefore, the energy absorbed will be:

$$E_{buckle} = F_{buckle}\,\delta_{crush} = 66{,}461 \text{ inch - lbs}$$

As the corner of the container collapses, the end clamp frame can be deformed. The clamp frame can be modeled as an arch which is pinned and free to translate at the ends (refer to Figure 2-5.1-5). The freedom to translate at the ends is due to the relatively weak Unistrut stud nuts (when compared to the strength of the clamp frames). Therefore, the pivot mounts will provide little constraint and the frames will rotate about the snubbers. Per Advanced Mechanics of Materials by Seely and Smith, the plastic bending stress ($\sigma_{plastic}$) in a curved beam (arch) can be expressed as follows:

$$\sigma_{plastic} = K\frac{M_{plastic}}{Z_{frame}}$$

where:

| | | |
|---|---|---|
| $\sigma_{plastic}$ | = | SF $\sigma_y$ = 45,000 psi |
| SF | = | Shape factor for plastic hinge<br>= 1.5 for rectangular section |
| $M_{plastic}$ | = | $\frac{1}{2} F_{plastic} [R \sin \left(\frac{1}{2} 0\right)]$ |
| R | = | Radius of frame curved section<br>= 5.47 in. |
| K | = | Correction factor for curved beams<br>1.14 for inside surface (controlling) |
| $Z_{frame}$ | = | Section modulus for inner surface<br>= 0.894 in³ |
| 0 | = | *angle of curved frame section = 90°* |

Solving the above expression for the force required to develop a plastic moment in the clamp frame arm *yields a value of 18,253 lbs. This load is conservative compared to an actual test of the frame described in* Appendix 2-5.4. This force will act through a distance of no less than 2-in. Therefore, the energy associated with the plastic hinge formation in the clamp frame is:

$$E_{frame} = F_{plastic} (\delta_{frame}) = 37{,}046 \text{ inch - lbs}$$

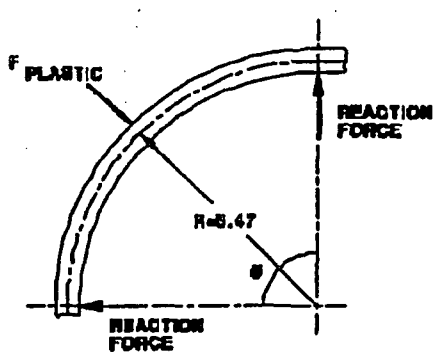


**Figure 2-5.1-5 Clamp Frame Plastic Hinge Model**

Performing a summation for the absorbed energy and subtracting this summation from the initial energy yields the remaining kinetic energy ($E_r$) which must be absorbed:

$$E_r = E_{initial} - (E_{\angle} E_{end} + E_{elastic} + E_{pin} + E_{corner} + E_{buckle} + E_{frame})$$

From the above summation, the remaining energy which must be absorbed is 31,904 in-lbs. This energy will be absorbed by the buckling of the fuel restraining bolts and the sliding of the fuel assembly closest to the impact point. The sliding of the fuel assembly requires the overcoming of the pressure pad preload forces times the frictional coefficient of the polyethylene sheeting-on-fuel grid spacer, which is assumed to be 0.35. Each pressure pad is preloaded to a nominal value of 1,000 lbs., with fourteen pressure pads per assembly. Therefore, the energy absorbed by the frictional sliding per linear inch of movement of the fuel is:

$$E_{friction} = (14)(0.35)(1{,}000) = 4{,}900 \text{ inch - lbs/inch}$$

The force required to buckle the four fuel restraining bolts will be based on the parabolic buckling formula for columns, since the slenderness ratio of the bolts is low:

$$F_{bolts} = 4\left[A\left(\sigma_y - K\frac{l}{k}\right)^2\right]$$

where:

| | | |
|---|---|---|
| $\sigma_y$ | = | 30,000 psi |
| A | = | cross-sectional bolt area = 0.1419 in$^2$ |
| K | = | $(\sigma_y/2p)^2(1/nE)$ |
| E | = | Young's modulus = 29.0 x $10^6$ psi |
| l | = | maximum unrestrained length of bolts = 4.5 in. |
| k | = | radius of gyration of bolt = 0.106 in. |
| n | = | end-condition factor = 1.2 (fixed-rounded ends) |

From this expression, the force required to buckle the four fuel restraining bolts is 16,356 lbs. The total force required to slide the fuel and buckle the bolts is:

$$F_{total} = F_{fuel} + F_{bolts} = 21{,}156 \text{ lbs}$$

The required deflection to absorb the remaining energy of the initial impact can now be determined:

$$\delta_{fuel} = \frac{E_r}{F_{total}} = 1.50 \text{ inches}$$

Because the length of the fuel restraining bolts is larger than the required deflection, the fuel assembly will not bottom out on the top closure assembly. Furthermore, this deflection does not have any adverse affect on the ability of the container to provide the required spacing for criticality control.

Since the total deformation required to absorbed the energy from the initial impact is localized, the overall function of the MCC containers will not be impaired by this drop orientation.

**Secondary Impact**

For the secondary impact of the MCC container, the amount of energy which is estimated to be absorbed is $1.786 \times 10^6$ in-lbs. This energy ($E_{secondary}$) will be absorbed by the following mechanisms:

- Outer shell angle stiffener buckling
- Crushing of outer shell angle stiffener
- Buckling of outer shell end plate
- Straining of elastomer shock mounts by internal structure
- Crushing the edge of the bottom support and spacer plates
- Plastic hinge formation in clamp frames
- Crushing of the fuel assembly nearest the impact point
- Crushing of swing bolts

For the slapdown impact, the MCC container will be nearly horizontal at the time of impact. However, for conservatism, it will be assumed that the container will be inclined at a slight angle ($\approx 5°$) from the horizontal plane. This inclination will limit the amount of contact surface, and thus impart maximum damage to the container due to the secondary impact. At a 5° angle, three angle stiffeners will be impacted. The maximum amount of crush for the secondary impact will be based on the ratio of the secondary and initial kinetic energies, times the initial crush:

$$\Delta_{secondary} = \frac{E_{secondary}}{E_{initial}} \Delta_{initial} = 9.66 \text{ inches}$$

where:

$\Delta_{initial}$ = 7-in.

This crush will occur at the end of the outer shell assembly which contacts the impact surface. At the other two stiffener locations, which are 30-in. and 66-in. from the end stiffener angle, the amount of crush will be equal to 6.60 in. and 2.93 in. respectively. The forced required to buckle an outer shell stiffener

angle has been previously determined to be 21,102 lbs. The total energy associated with the buckling of the three angle stiffeners is then:

$$E_{\angle\ buckle} = (21{,}102)(9.66 + 6.60 + 2.93) = 404{,}947 \text{ inch - lbs}$$

The crushing of the angle stiffener will only occur at the end stiffener. The energy associated with this mechanism has been previously determined to be 367,500 in-lbs. Therefore, the total energy absorbed by the angle stiffeners will be the sum of the above:

$$E_{\angle} = E_{\angle buckling} + E_{\angle\ crush} = 772{,}447 \text{ inch - lbs}$$

The force associated buckling of the outer shell end plate has been determined for the initial impact. For the secondary impact, the energy absorbed will be:

$$E_{plate} = (9.66)(F_{plate}) = 251{,}556 \text{ inch - lbs}$$

The elastic strain energy of the elastomer shock mounts will be approximately equal to the initial impact energy:

$$E_{elastic} = (18)(1{,}750)\delta_{\ internal} = 220{,}500 \text{ inch - lbs}$$

where:

$\delta_{internal}$ = 7-in.

The energy absorbed by the formation of a plastic hinge in the three clamp frames is different for each frame since the container is inclined. It is estimated that the end clamp frame will deform a total of 3-in., with the other two clamp frames having about a ½-in. and 1-in. less deflection respectively. Therefore, the energy absorbed will be:

$$E_{frames} = F_{plastic}\ (3 + 2.5 + 2) = 136{,}898 \text{ inch - lbs}$$

where:

$F_{plastic}$ = 18,253 lb.

Prior to the formation of the plastic hinge in the clamp frames, the fuel will be crushed in the areas under the pressure pads. The initial fuel assembly crush force per pad has been determined to be 6,000 lbs (see page 6). Since only three clamp frames (six pressure pads total) will be affected in the secondary impact, the energy absorbed by the fuel crush will be:

$$E_{fuel} = (6)(6{,}000)(\delta\ fuel) = 36{,}000 \text{ inch - lbs}$$

where:

$\delta_{fuel}$ = 1-in.

Additional energy absorption will occur by the crushing of the ends of the swing bolts. From page 2.16, the energy absorption per bolt has been estimated to 8,940 in-lbs. For the secondary impact event, approximately four of the swing bolts will be crushed. Therefore, the energy absorbed by the bolts is:

$$E_{swing\ bolts} = (4)(8{,}940) = 35{,}760 \text{ inch - lbs}$$

Following the energy absorption of the above mechanisms, the bottom support and spacer plates will impact and crush, absorbing the remaining energy. The remaining energy to be absorbed ($E_r$) will be:

$$E_r = E_{secondary} - \left(E_{\angle} + E_{plate} + E_{elastic} + E_{frames} + E_{fuel} + E_{swing\ boltss}\right)$$

From this summation, it is found that the bottom support and spacer plates must absorb 369,557 in-lbs. The bottom support plate is a ¾-in. thick carbon steel plate while the spacer plate is a ½-in. thick austenitic stainless steel plate. The amount of material crush which will be required to absorb the remaining energy can be determined from the relative flow strengths of the two materials.

$$\text{Volume}_{crush} = \frac{E_r}{\sigma_{flow\ ave}} = 8.18 \text{ inch}^3$$

where:

$\sigma_{flow\ ave}$ = $(0.75/1.25)(\sigma_{flow\ cs}) + (0.50/1.25)(\sigma_{flow\ ss})$
= 45,200 psi

$\sigma_{flow\ cs}$ = 42,000 psi (carbon steel)

$\sigma_{flow\ ss}$ = 50,000 psi (stainless steel)

Assuming a 45° impact on the support and spacer plates, the required crush depth to absorb the remaining energy is approximately 2-½ inches. This depth of crush is highly localized and will have no effect on the ability of the MCC containers to provide the required spacing to maintain a sub-critical geometry.

The above analyses demonstrate the capability of the container and payload to absorb the energy of the slapdown event without failing all of the clamp frames which restrain the fuel assemblies and provide the required minimum spacing for criticality control. The analyses demonstrate that the kinetic energy can be absorbed in localized areas of the container which correspond to the areas of impact. These areas, which sustain substantial damage, do not compromise the restraint of the fuel assemblies and the subsequent required spacing. The localized areas of the container (i.e., the ends) will sustain damage, leaving the undamaged areas of the container to restrain and maintain the spacing required for criticality control. The center clamping frames and the outer shell will basically remain undamaged after the event, as the above analyses indicate. This condition was confirmed by prototypic testing of the MCC-3 container. The

testing, which is discussed in Appendix 2-5.3, demonstrated much less damage than was predicted by the analyses. The clamp frames on the initial impact end sustained very little damaged and did not deformed. This configuration left four of the seven frames fully capable to restrain the fuel an provide the required spacing. The outer shell closure, as expected, was not significantly damaged with the majority of the outer shell fully intact to assist in maintaining the required spacing.

The reduced damage of the test unit indicates that the kinetic energy was dissipated by other means. Possible reasons for the differences include: 1) the material properties of the test unit were significantly stronger that the minimum values utilized in the analyses, and 2) more of the energy was dissipated in elastic flexure of the various components, such as the center wall, the cork fuel protectors, the various components of the strongback, the fuel assemblies, and the outer shell assembly. Any of these mechanisms could affect the amount of damage and the subsequent forces experienced by the components.

#### 2-4.1.2.3 Side Drop onto Package Closure

The side drop onto the package closure evaluates the ability of the package to remain intact under the most severe conditions. The main purpose of the side drop onto the package closure is to ensure the top and bottom segments of the outer shell do not separate. The damage to the outer shell and internal structure is expected to be maximized in the side drop onto the package top and the side drop onto the clamp frames. The outer shell and internal structure's ability to fully absorb the kinetic energy of the 30-foot drop has been demonstrated in the preceding sections. Therefore, the energy absorption capacity of the outer shell and internal structure will not be explicitly demonstrated again in this section.

The outer shell upper and lower segments are connected with thirty (MCC-3) or fifty (MCC-4) ½-in. T-bolts. The package closure failure mechanisms evaluated in this section include:

- Failure of the T-bolts
- Failure of the shell connection flange

The fuel as stated earlier, is unrestrained. The middle arms remain fully intact to maintain spacing. The damaged areas will have crushed the fuel making it less reactive. The basic structure will remain intact, confining both the fuel and the gadolinium plate in the pre-drop geometry.

##### 2-4.1.2.3.1 Side Impact on Closure

The MCC container response to a side impact is dependent on the stiffness of the outer shell. The ends of the container and the support cradle are much stiffer than the center section. Hence, the separation loads from the outer container impact and the payload impact are not transmitted to the non-impacted side bolts (refer to Figure 2-5.1-6). The adequacy of the T-bolts can be determined by looking at each section.

The adequacy of the T-bolts on the non-impacted center section of the container can be reviewed by determining the maximum load which can be transmitted to the T-bolts.

For analysis purposes, the center section can be broken up into segments, approximately 40 inches in length, with a stiffening angle on each lid segment (refer to Figure 2-5.1-7).

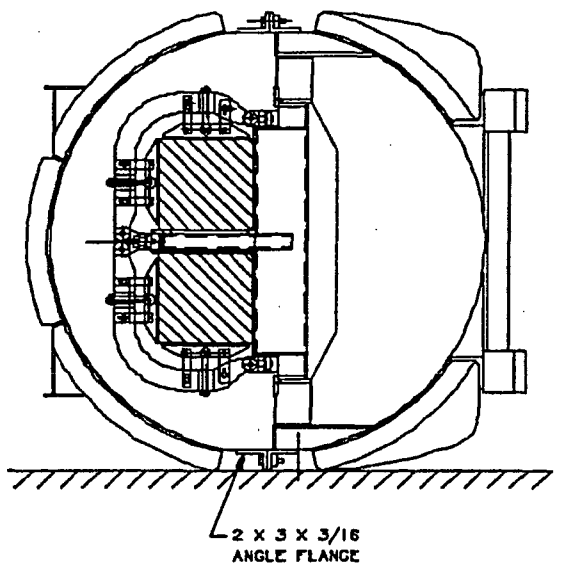


**Figure 2-5.1-6 Side Drop onto Package Closure**

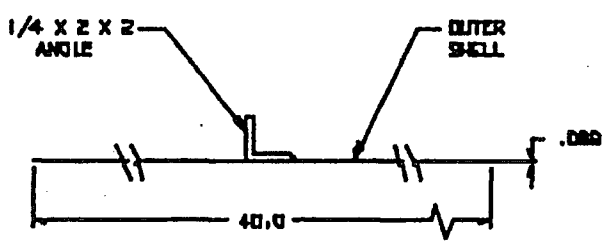


**Figure 2-5.1-7 Outer Shell Center Section Model**

The cross sectional area is made up of a 0.089-in. plate and a ¼ x 2 x 2 angle. The moment of inertia for this section ($I_{section}$) is calculated to be:

$$I_{section} = I_{\pi} + (y_{\pi} - y)^2 (A_{\pi}) + I_{plate} - + (y_{plate} - y)^2 (A_{plate})$$

$$y = \frac{(A_{\angle})(y_{\angle}) + (A_{plate})(y_{plate})}{(A_{total})} = 0.175 \text{ inch}$$

where:

| | |
|---|---|
| $y =$ | centroid location of section |
| $y_{\pi} =$ | centroid of angle = 0.669 in. |
| $y_{plate} =$ | centroid of plate section = 0.0445 in. |
| $A_{\pi} =$ | Area of angle = 0.94 in² |
| $A_{plate} =$ | Area of plate = 3.56 in² |
| $A_{total} =$ | $A_{\pi} + A_{plate} = 4.50$ in² |
| $I_{\pi} =$ | Section Modulus of angle = 0.34 in$^4$ |
| $I_{plate} =$ | Section Modulus of plate = $bh^3/12 = 2.35 \times 10^{-3}$ in$^4$ |

Where b and h are the width and thickness of the plate

From the above expressions, $I_{section}$ is found to be 0.632 in$^4$. The maximum transmitted load due to the impact of the shell is determined from the maximum moment ($M_A$) and the maximum tension force ($T_A$), using Table 17, Case 13 of Formulas for Stress and Strain, Fifth Edition by Roark and Young.

$$M_A = w (R)^2 (2 - \frac{K_4}{2})$$

$$T_A + \frac{w R}{2}(K_4)$$

where:

| | | |
|---|---|---|
| R | = | Radius to Centroid = 20.711 in. |
| w | = | weight per linear circumferential inch |
| $K_1$ | = | $1 + \alpha + \beta = 1.0173$ |

$K_2$ = $1 - \alpha + \beta = 1.0167$

$K_4$ = $K_2/K_1 = 0.999$

$\alpha$ = $(I_{section}) / (A_{total} R^2) = 3.27 \times 10^{-4}$

$\beta$ = $[(F)(E)(I_{section})]/[(G)(A_{total})(R) = 0.017$

E = Young's Modulus = $29.0 \times 10^6$ psi

G = Modulus of Rigidity = $11.5 \times 10^6$

F = Shape Factor = 1.0 (conservative)

A plastic hinge in the outer shell/stiffener angle will be formed, which will allow the shell to deform. This hinge will form when the bending stress approximately equals 1.25 times the yield stress, or $\sigma_{plastic} = (30{,}000) = 37{,}500$ psi (at a distance c from the neutral axis to the point of highest stress, 1.914 inches). Equating this plastic hinge stress to $M_A$ allows the force w to be determined:

$$w = \frac{2\sigma_{plastic} I_{section}}{3c(R)^2} = 19.24 \text{ lbs/inch}$$

Substituting the circumferential load (w) into the equations for the bending moment $M_A$ and tension force $T_A$ equals 12,383 in-lbs and 199 lbs. respectively. These loads are reacted by the T-bolts (refer to Figure 2-5.1-8). For each shell section, the T-bolts are spaced at 16.88 inches. This spacing results in 2.37 bolts per section (40.0/16.88) which will react these loads. The load in each T-bolt ($P_{bolt}$) is determined as follows:

$$P_{bolt} = \frac{M_A/d + T_A}{2.37} = 7{,}050 \text{ lbs.}$$

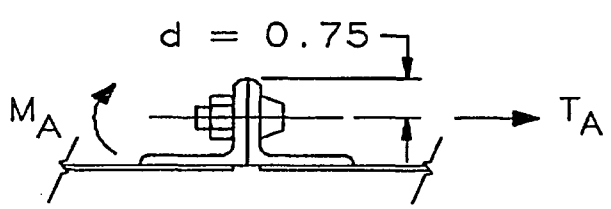


**Figure 2-5.1-8 Outer Shell T-Bolt Reactions**

The T-bolts are ½ - 13 UNC threads and have a minimum tensile strength of 125.0 ksi. The bolt ultimate capacity ($P_{capacity}$) is then:

$$P_{capacity} = A_t\,(125{,}000) - 17{,}737 \text{ lb.}$$

where:

$A_t$ = Bolt tensile stress area = 0.1419 in²

The resultant Margin of Safety for the T-bolts is:

$$M.S. = (17{,}737/7{,}050) - 1 = +1.51$$

The maximum transmitted load would not change due to the application of the payload force. That force would still have to be transmitted to the T-bolts by a similar mechanism. Since the transmitting mechanism is limiting, the T-bolts cannot be loaded additionally.

Center impact side T-bolts can be evaluated by reviewing the applied loads. Adjacent and perpendicular to the sealing angle flange in the center portion are two stiffening angles for the lid. There are no similar sections for the lower half. When the sealing flange is impacted, both the outer shell and the internal structure apply a separation load to the sealing flange. Since the bare sealing flange strikes the impact surface, the impact loads will be high.

The capacity of the T-bolts has been calculated above as 17,737 lbs. The capacity of the 0.31-in. x 2-in. x 3-in. sealing flange angle to transmit the load to the T-bolt is found by equating the maximum applied potential bending stress to the plastic hinge stress of 45.0 ksi (1.5(30.0 ksi)). The resultant moment is then reacted by a T-bolt.

$$M_{bolt} = \frac{\sigma_{plastic}\, I_{flange}}{c}$$

where:

$M_{bolt}$ = Maximum applied potential moment = $F_{bolt}(d)$

$I_{flange}$ = Moment of inertia for a 16.88 inch stay
= $1/12\,(16.88)(.31)^3 = 0.043$ in⁴

d = distance between bolt centerline and edge of sealing flange = 0.75 in.

c = distance to extreme fiber = 0.31/2 = 0.155 in.

$F_{bolt}$ = Force in T-bolt, lbs.

Solving for $F_{bolt}$ produces a maximum potential force of 16,645 lbs. This applied potential force is close to the minimal capacity of the T-bolt (16,645 lbs vs. 17,737 lbs). Because of the relative closeness of these two values, there may be some bolt failures in center section on the impacted side. This condition was

experienced in the prototypic drop tests of the MCC-3 container. However, there are additional T-bolts which will not fail and thus, the outer shell assembly will remain around the fuel assemblies.

#### 2-4.1.2.3.2 End Bolts on Impacted Side

Toward the ends of the package, in the region adjacent to the support cradle and stacking frame, the stiffeners are reinforced and symmetrical about the flange. This configuration reduces the rotation due to *the separating force on impact. The stiffener angles protect the T-bolts from experiencing the separating* moment and prevents failure of the T-bolts (refer to Appendix 2-5.3).

#### 2-4.1.2.3.3 End Bolts on Non-impacted Side

The end sections are very stiff compared to the center section because of the end plates of the shell and the axial compression of the end sealing flange. These components ensure that most of the energy of impact is transmitted to the T-bolts (refer to Figure 2-5.1-9).

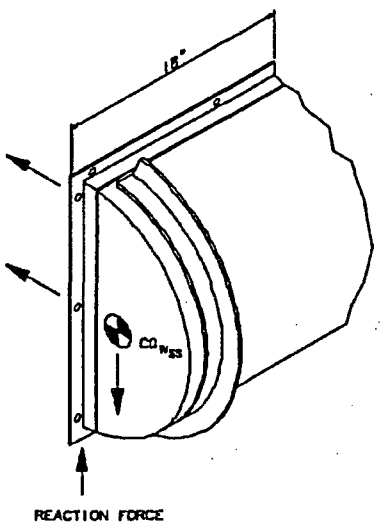


**Figure 2-5.1-9 Outer Shell End Assembly Model**

For this analysis, it is assumed that only the end shell is effective and that a 18-inch section acts upon the T-bolts. For simplicity, it is further assumed that the weight is uniformly distributed. For one-half the MCC-3 outer shell assembly, the weight is $w_{shell}$ = 1140 lbs., which equates to a weight per section ($w_{ss}$) of 109.59 lbs ([18/187.25][1140]).

To estimate the impact force, it is assumed that the kinetic energy of the outer shell assembly is absorbed by the flow of the sealing flange. The amount of flange crush ($\delta_{ss}$) is estimated as follows:

$$\delta_{ss} = \frac{E_{ss}}{\sigma_{flow} A_{flange}}$$

where:

| | | |
|---|---|---|
| $\sigma_{flow}$ | = | 42,000 psi |
| $A_{flange}$ | = | Flow area of upper and lower flanges<br>$= 2\,[(18)(.31)] = 11.16\ in^2$ |
| $E_{ss}$ | = | Kinetic Energy of section<br>$= 360(w_{ss}) = 39{,}452$ in-lbs |

Based on the above values, the estimated sealing flange crush is 0.084 in. Ratioing this deflection to the drop height gives the approximate g loading of the impact.

$$G_{impact} = \frac{\Delta_{drop}}{\delta_{ss}} = \frac{360}{0.084} = 4{,}286$$

Although possible, this impact load is exceedingly high. Since other mechanisms may absorb kinteic energy, such as bending of the angle, one-half of the above value will be used for calculation purposes (i.e., $G_{impact} = 2{,}143$).

The T-bolt loads increase linearly from the initial contact point. The load in the T-bolts may be found by summing moments about the impact point:

$$F_{bolt}\left[3(43.75) + (22.25)\left(\frac{22.25}{43.75}\right)\right] = \left[\frac{(20.531)(2)}{\pi}\right](G_{impact})w_{ss}$$

From the above equation, the T-bolt force ($F_{bolt}$) is found to be 21,531 lbs., which is larger than the T-bolt capacity. When adding in the force of the payload, the force on the T-bolts will be larger.

The upper shell will stay attached to the lower portion of the outer shell assembly of the container. The T-bolts in the center will remain intact on the non-impacted side while the bolts toward the ends of the outer shell will maintain integrity on the impacted side.

### 2-4.1.3 Corner Drop

The primary function of the MCC container is to maintain the criticality spacing of the fuel. In accordance with this purpose, the corner drop analysis is not a controlling drop orientation for the MCC container. The resulting deformations and deceleration loadings of the side drop discussed in Section 2-4.1.2 bound the corner drop results.

### 2-4.1.4 Oblique Drops

The primary function of the MCC package is to maintain the criticality spacing of the fuel. In accordance with this function, only the oblique drop which would cause the most severe slap-down effects on the package is evaluated. The resulting deformations and deceleration loadings of the side drop with slap down onto the clamp frames is evaluated in Section 2-4.1.2.2.

### 2-4.1.5 Summary of Results

As discussed in the preceding sections, the MCC containers will survive the crucial 30-foot accident drops. The containers are expected to be damaged as the kinetic energy of the accident drops is absorbed by the strain energy associated with the deformation of the container. The internal structure and the outer shell assembly are generally expected to act independently during the accident drops, each deforming to absorb its own kinetic energy. This behavior is due to the very soft shock mount system which connects the two separate components. Although damage is expected, failure of the container to remain substantially intact and provide the required spacing for criticality control will not occur. The fuel will maintain its relative position in the structure and maintain the minimum required criticality spacing of 8 inches for the crucial fuel orientation. The maximum deformation to the package components is 4 inches which will occur during the 135° orientation side drop. These results closely correlate with the results recorded in the hypothetical accident tests performed on a prototypical MCC-3 container, which is discussed in Appendix 2-5.3.

# APPENDIX 2-5.2
# EVALUATION OF DROP ANGLE

## JUSTIFICATION OF OBLIQUE DROP ANGLE

The performance tests to demonstrate the structural adequacy of the Westinghouse MCC containers under the hypothetical accident requirements of 10CFR71.73 requires that a specimen be able to sustain a free fall from a height of 30-feet onto a flat, unyielding horizontal surface, striking the surface in a position for which maximum damage is expected. To comply with this requirement, it is necessary to evaluate which orientation would possibly produce the maximum damage to and/or failure of the package. For the MCC containers, failure is defined as not providing adequate spacing or restraint to the fuel assemblies which would result in a criticality event. The most probable failure which would result in an unsafe criticality geometry is failure of the clamp frames which restrain the fuel assemblies. To propagate this potential failure, the maximum forces from both the primary and secondary impacts would be required to apply the loads to the clamp frames.

At an inclined angle of 90° from the horizontal, the MCC container would be impacting the surface in the longitudinal axis orientation. This orientation would potentially result in crushing the fuel and would not impact any significant loads to all of the clamp frames. At 0°, the package would not experience any additional impact loads from a secondary impact caused by rotational acceleration following a primary impact. Therefore, it is clear that in order to impart the greatest forces onto the clamp frames and normal to the fuel assemblies, the package must be orientated between 0° and 90° as measured from the horizontal.

To determine which angle should be utilized in evaluation of the package, a simplistic model of the MCC internal strongback structure was modeled using the Shipping Cask Analysis System (SCANS) program. The MCC SCANS model consisted only of the internal structure, since the MCC outer shell and the internal structure can be decoupled (note that the impact angle for the internal structure will be slightly less than the initial angle of the outer shell assembly). The SCANS model was then analyzed at various orientations from 15° to 60°, in increments of 15° using various linear stiffnesses for the "impact limiters" (i.e., the end clamp frame/attachment brackets/fuel bundle).

The results of the various computer runs of the SCANS model are summarized in Figure 2-5.2-1. In reviewing this data, one can see that the vertical g's due to the primary impact increase as the package inclination increases, for a specified stiffness. However, the vertical g forces due to the secondary impact are very similar for the 15° and 30° orientations, but decrease as the angle is increased. Note that the actual MCC package will have a stiffness which is more represented by the lower stiffness value rather than the higher values.

For the above reasons, the total maximum vertical g forces which will be imparted to the MCC clamp frame will occur when the package is oriented approximately at the 30° orientation. Therefore, this orientation was utilized in the MCC container evaluation for compliance to 10CFR71.73.

| Angle | Package Stiffness kips/in | Primary Impact | Secondary Impact |
|---|---|---|---|
| 15° | 5.0 | 14.1 | 22.6 |
| 30° | 5.0 | 17.2 | 22.5 |
| 45° | 5.0 | 18.0 | 21.1 |
| 15° | 10.0 | 19.8 | 32.1 |
| 30° | 10.0 | 22.1 | 31.9 |
| 45° | 10.0 | 25.9 | 29.7 |
| 15° | 20.0 | 28.3 | 45.5 |
| 30° | 20.0 | 31.6 | 45.1 |
| 45° | 20.0 | 37.0 | 41.7 |
| 15° | 50.0 | 45.2 | 72.1 |
| 30° | 50.0 | 50.5 | 71.4 |
| 45° | 50.0 | 59.1 | 65.5 |
| 15° | 100.0 | 64.2 | 102.1 |
| 30° | 100.0 | 71.7 | 100.9 |
| 45° | 100.0 | 84.1 | 92.3 |
| 15° | 200.0 | 91.0 | 144.2 |
| 30° | 200.0 | 101.8 | 142.5 |
| 45° | 200.0 | 119.3 | 130.0 |

**Figure 2-5.2-1 Westinghouse MCC Container – Summary of Vertical G's for Various Oblique Angles (SCANS Model Output)**

# APPENDIX 2-5.3
# EVALUATION OF TEST RESULTS

# TESTING OF THE MCC CONTAINER

## INTRODUCTION

The MCC-3 container was drop tested to confirm the survivability of the container. Three accident condition tests were performed on three separate containers. These tests were selected to demonstrate the container's ability to meet the structural requirements following the accident events.

The tests demonstrated that the package would meet the following criteria:

1. Integrity of clamp frames.
2. Minimum spacing would be maintained.
3. The outer shell assembly would remain around the internal structure.

The integrity of the clamp frames is required to ensure that the fuel assemblies will maintain their relationship to the gadolinium plates and will maintain their spacing relative to other containers.

Minimum spacing is required to maintain a sub-critical geometry. The minimum required spacing is four (4) inches between the edge of a fuel assembly and the edge of another container holding fresh fuel in a plane parallel to the assembly – for a total minimum fuel-to-fuel separation of eight (8) inches.

The outer shell assembly must be maintained around the internal structure for spacing purposes, and to assure the contents can only be exposed to full-density water (flooding) moderation. Without the shell, the clamp frames and snubbers, which act as spacer blocks, could be placed adjacent to each other which would result in the required spacing not being maintained.

The three drop orientations chosen to demonstrate the container's ability to satisfy these conditions were: 1) a side drop onto the package top; 2) a side drop with slapdown onto the internal clamp frames; and 3) a side drop onto the package closure. The side drop onto the package top loads up the frames and its connection points. It also attacks the snubbers and swing bolts. The slapdown applies the maximum crush force to the fuel, clamp frames, and connection points in localized areas. The drop onto the closure applies the maximum load to the T-bolts which hold the two halves of the outer shell together.

## PACKAGE CONFIGURATION

All drops were performed using an MCC-3 container with a modified payload. The payload weight was increased to ensure that the maximum load per clamp frame and per closure bolt would be tested. The worst case condition not only bounded the possible configurations for the MCC-3 container, but also bounds the MCC-4 container. (See the justification provided in Section 2-4.5.) Both fuel compartments contained simulated fuel assemblies. The weights of the dropped packages were 4,244 pounds for the empty package and 3,300 pounds for the fuel assemblies. The total weight of each test container was 7,544 pounds.

## DROP TEST FACILITIES

All three tests were performed at the Oak Ridge National Laboratory drop facility.

Impact (Target) Pads

There are two drop test facilities which have been used to test packages. The smallest facility is the old test facility that utilizes a concrete pad with an impact surface of armor plate. This facility has been modified recently to provide a larger impacting surface than was available in the original pad.

The concrete and steel in the pad weighs approximately 40 tons; its top surface is approximately 11-ft x 10-ft and has an 8-ft square armor plate surface embedded in it. A larger impact surface was added to the pad as part of the recent modification. Several pieces of armor plate 6-in thick were added, which effectively cover the entire pad and overhang about 2-ft in one direction. The additional armor plate is welded to the original plate and adds approximately 60 tons. However, it has a significantly larger effective mass, since the bulk of the pad rests on a 3-ft diameter concrete column which was sunk into bedrock approximately 7-ft below grade. An illustration of this pad is shown in Figure 1.

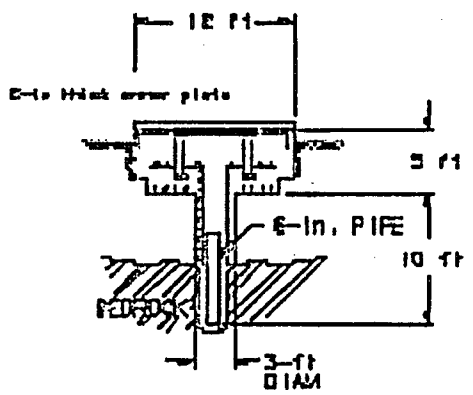


**Figure 1 Sectional View of the Small Drop Pad**

## DAMAGE SUMMARY

All of the containers performed well in the tests. In general, the damage/deformation was less than what was expected. The clamp frames' geometry was preserved and the overall spacing was maintained. Sufficient T-bolts survived the drop tests to ensure that the outer shell assembly would not be separated from the fuel assemblies and the internal structure. Details of each test are provided below.

In all cases, very little global damage occurred to the fuel assemblies or the internal structure. The center wall deformed very little, thus ensuring that the gadolinium plates would remain intact and functional.

## SIDE DROP ONTO CONTAINER TOP

Refer to Figures 2-5.3-1 through 2-5.3-8.

The container demonstrated an adequate margin of safety against loss of fuel retention. The overall damage to the container was less than what was expected. The total deformation of the top cover was approximately 4-inches. There was a noticeable affect of the ends and stiffener angles. At the ends, the stiffener angle folded. In the center, the angles deformed more, but did not fold. The deformed shape of the angles was similar to flattening of an arch. It was very evident that the internal structure bottomed out by the imprints of the clamp frames on the top shell cover.

An interesting phenomenon which occurred was the localized shearing of the lid outer shell. The location of one stiffener angle was offset slightly from a frame. The stiffener angle was driven in and the frame out, shearing the shell. This effect was a local occurrence which would be impossible to duplicate over the length of the outer shell lid. In all cases, there are more clamp frames than stiffening angles.

The fuel restraint system held the fuel assemblies in position. All of the clamp frame connections retained their connectivity to the strongback. There was only a slight deformation of one Unistrut channel at one end. The snubbers limited the flow of the pressure pad swing bolts. Their undamaged presence demonstrated that the required spacing would be maintained as long as the outer shell assembly remained intact. The clamp frames did not noticeably deform. The fuel assemblies crushed approximately ½ to 1-inch.

## SIDE DROP WITH SLAPDOWN ONTO INTERNAL CLAMP FRAMES

Refer to Figures 2-5.3-9 through 2-5.3-18.

The container was dropped at an inclined angle of 30°, relative to the horizontal plane, and was rotated about its longitudinal axis 135° clockwise, to ensure that the impact point would occur on the corner of the fuel.

Significant damage occurred to the outside of the container. The initial impact corner deformed in approximately 6-inches. The slapdown corner deformed approximately 7-inches. The stacking support angle was completely crushed and flattened on both ends. The internal structure impacted the outer shell and punched several holes in each of the corners.

Most of the kinetic energy on the initial impact end was absorbed by deforming the top closure assembly. The end fuel restraining bolts deformed significantly and one connecting pin was sheared. The end clamp frame was only slightly deformed. The fuel assembly closest to the initial impact point was crushed very little.

The middle clamp frames were damaged very little, with only a slight crush and bending of the adjustable swing bolts. The center section of the fuel assembly had insignificant amount of crush.

As expected, the damage on the slapdown end was more significant. Three clamp frames were deformed inwardly with most of the damage occurring on the outer two. The bottom support structure punched

through the outer shell and struck the impact surface. This condition resulted in a relatively high g loading, but limited the deformation of the fuel. As can be seen in the photographs, the end plate was only slightly damaged, indicating that a majority of the energy had already been absorbed. For this reason, dropping the container with a reversal of the ends would not result in significantly more damage. Due to the deformation of the clamp frames, the top pivot mount stud nuts partially pulled out of the Unistrut channel. This situation is not a concern because the fuel assemblies remained restrained by the fact that the connection to the adjacent frame remained intact. In addition, the undamaged center frames would have provided sufficient restraint to maintain spacing even if the end frames had completely failed. The lower pivot mount connections remained connected, although there was significant deformation of the Unistrut channel on the deformed clamp frames. The lower pivot mount connection on the most severely deformed frame remained attached to only one side of the Unistrut channel. The fuel assemblies under the pressure pads were crushed approximately ½ to 1 inch.

**SIDE DROP ONTO PACKAGE CLOSURE**

Refer to Figures 2-5.3-19 through 2-5.3-27.

The side drop onto the closure demonstrated the adequacy of the closure T-bolts. It is required for the top and bottom shells to stay connected to the internal structure inside. This is required to maintain the sub-criticality spacing since without the outer shell assembly, the clamp frames and snubbers, which act as spacers, could be located side-by-side, thus reducing the spacing by one half. This is also required to assure that contained fuel assemblies can only be exposed to full-density water moderation (flooding), and not to partial-density water moderation (sprays, etc.).

Fifteen of the thirty T-bolts either pulled through the shell sealing flange or failed in tension. None of the T-bolts failed in shear. The six guide pins, which have closer tolerances than the T-bolts, did not shear either. The location of the T-bolt failures varied, depending on the construction of the container. On the impact side, six bolts failed. The majority of these failures were in the center section where the shell has the minimum amount of reinforcement. The outer shell, with the internal shock mount bracket, deformed and applied a high bending moment in the closure flange area. This prying action was resisted by the T-bolts until failure occurred. In general, this condition did not occur towards the ends where the major reinforcement which would resist this bending moment is located. The bending of the shell was demonstrated by the fact that the center section of the container, which is loaded by the fuel assemblies, deformed downward about 2-½ inches on the non-impacted side, relative to the ends. The remaining T-bolts failed on the ends and towards the ends on the non-impacted side. These failures were the result of the stiff ends, and reinforcement in these locations, transmitting the separation load from the weight of the shell and payload, pushing the shell apart. The moment is reacted by the bolts on the far side of the container.

By having two different mechanisms working in the container, catastrophic failure of fasteners is avoided. This behavior ensures that there is a large margin against having the outer shell assembly fail in such a manner that the internal structure will separate from the outer shell.

The internal structure impacted initially on the shock mounts and then rotated to spread the load between the shock mounts and the frames contacting the external shell. The load on the shock mounts crushed the mounting bracket such that the connecting bolts punched into the outer shell. The frames also indented

into the outer shell. The loads were sufficient to cause the trunnion block on the uprighting pivot to fail. Once this failed, the strongback and fuel assemblies slid out of the side swing bolt (different than the adjusting fuel swing bolts) connections and became free.

The impact on the frames, with the subsequent load transmittal to the center wall, as well as the non-impacted frames, caused some yielding in the Unistrut pivot mount connections to the center wall. All of the frames remained connected to the adjacent frame so that restraint of the fuel assemblies was maintained. The majority of the yielding of connections occurred in the center section where the deformation of the outer container was the greatest, allowing the most deformation of the internal to occur. The center clamp frame pried its lower pivot mount connection out of the Unistrut channel. This failure is due to a stiffening angle on the outer shell being located adjacent to the frame. During impact, the frame was driven in and the frame out, shearing the shell, which allowed the frame to see a higher impact than if the shell and angle were there to deform and soften the impact. Due to the redundant nature of the frames, this single failure does not prevent the package from fulfilling its requirements.

The adjustable swing bolts were bent slightly. There was very little damage to the frames or to the snubber blocks. There was a small amount of crush to the fuel assembly of about ½-inch, but no compromise of the required spacing occurred.

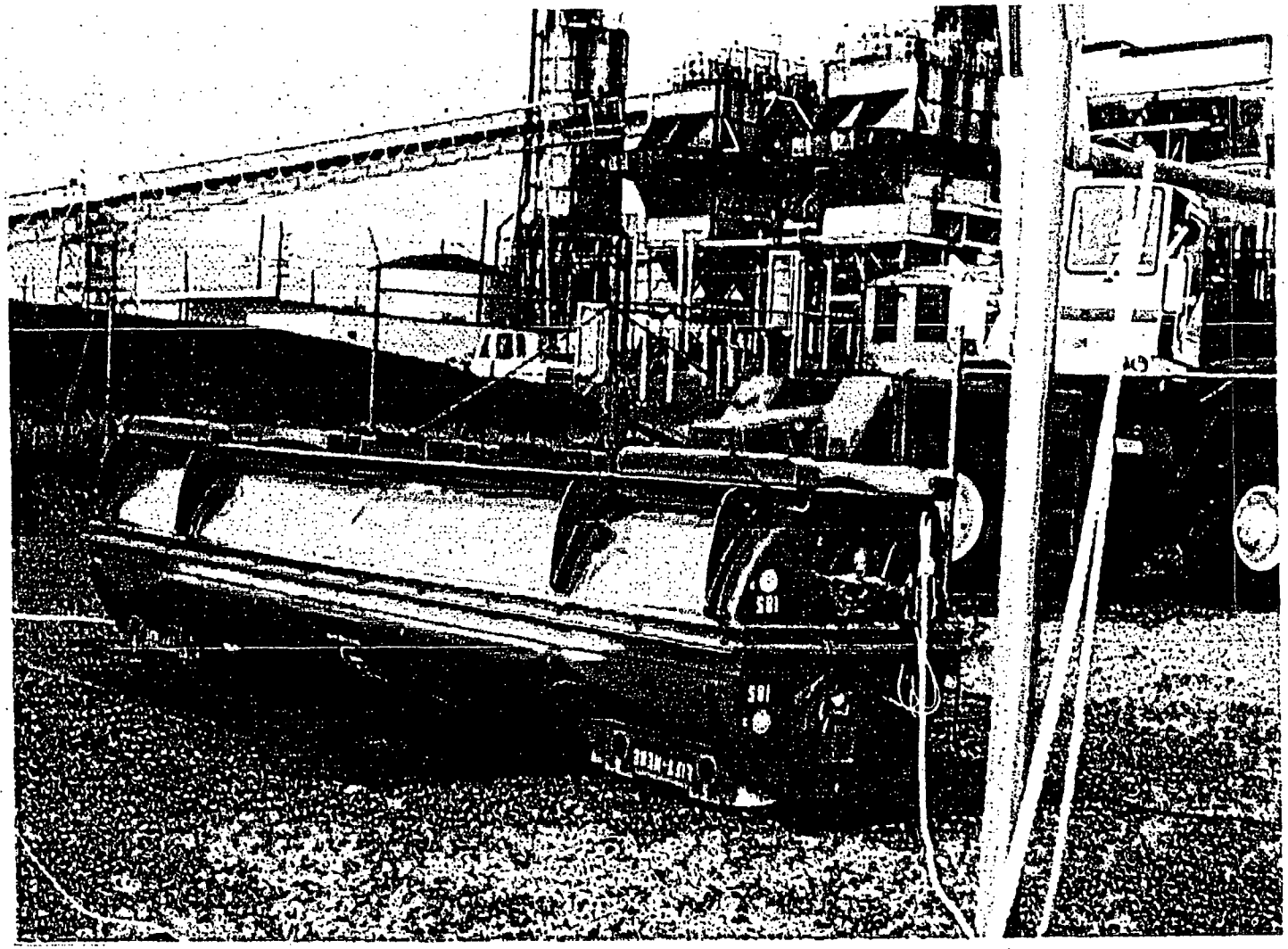

Figure 2-5.3-1 Side Drop onto Container Top

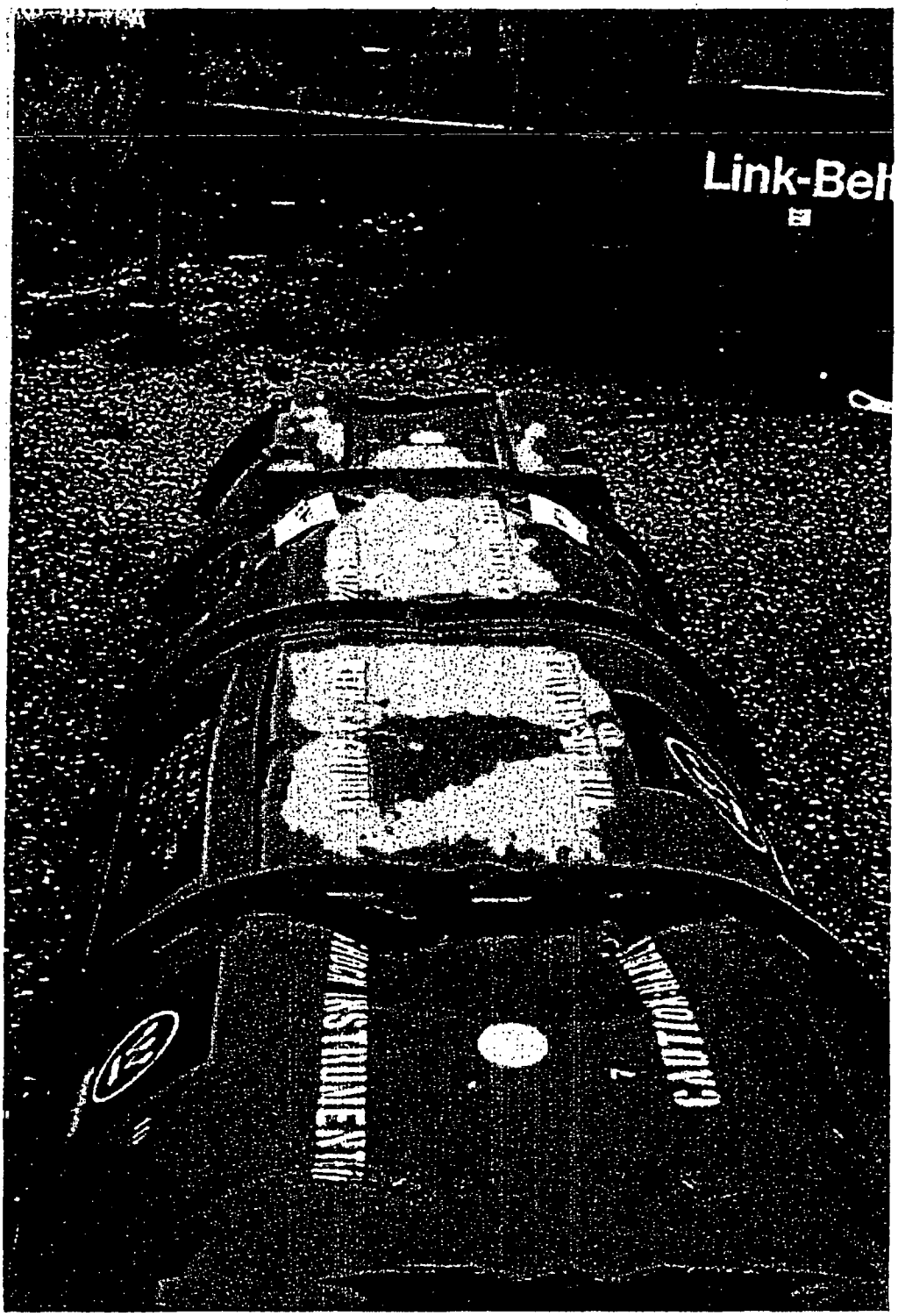


Figure 2-5.3-2 Side Drop onto Container Top

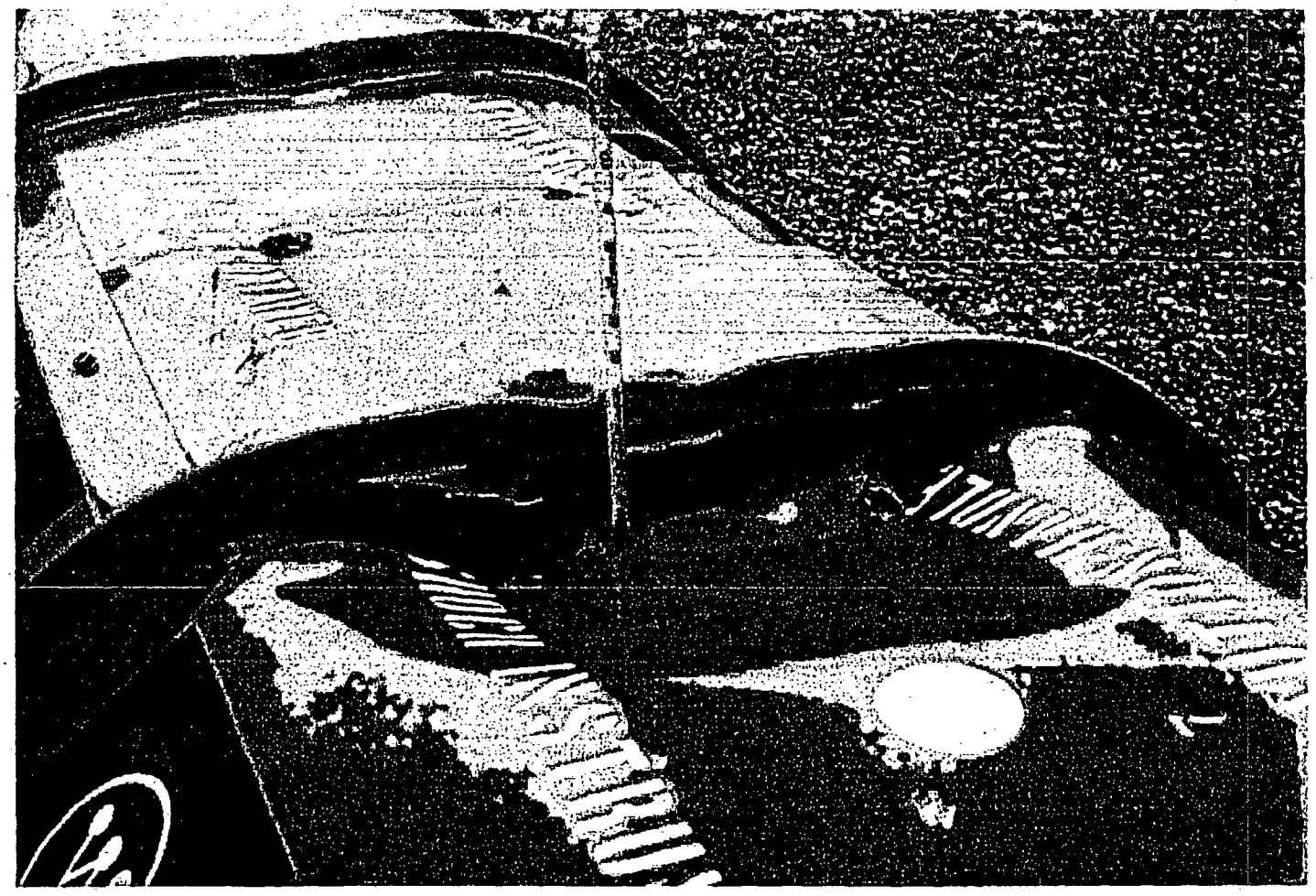

Figure 2-5.3-3 Side Drop onto Container Top

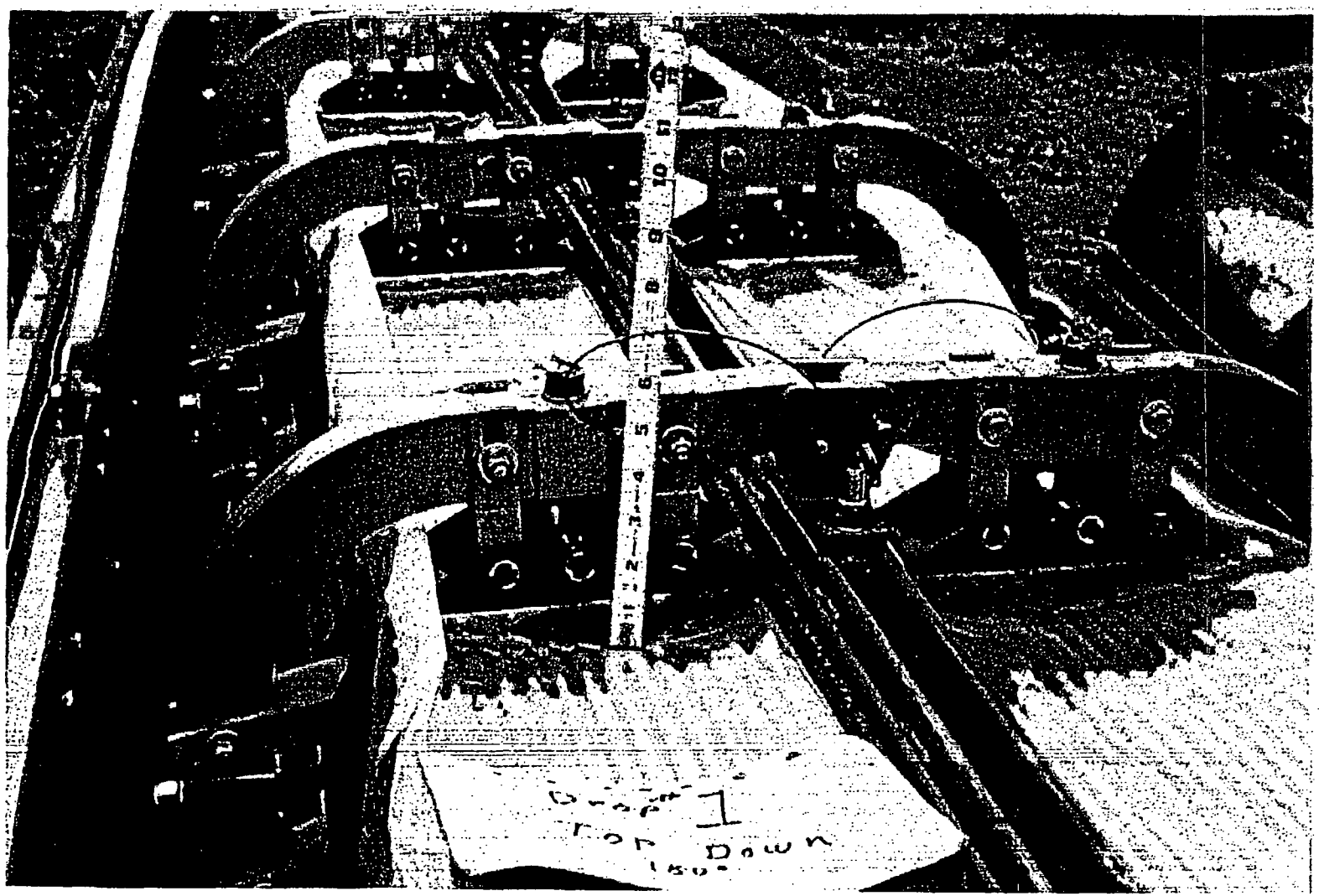


Figure 2-5.3-4 Side Drop onto Container Top

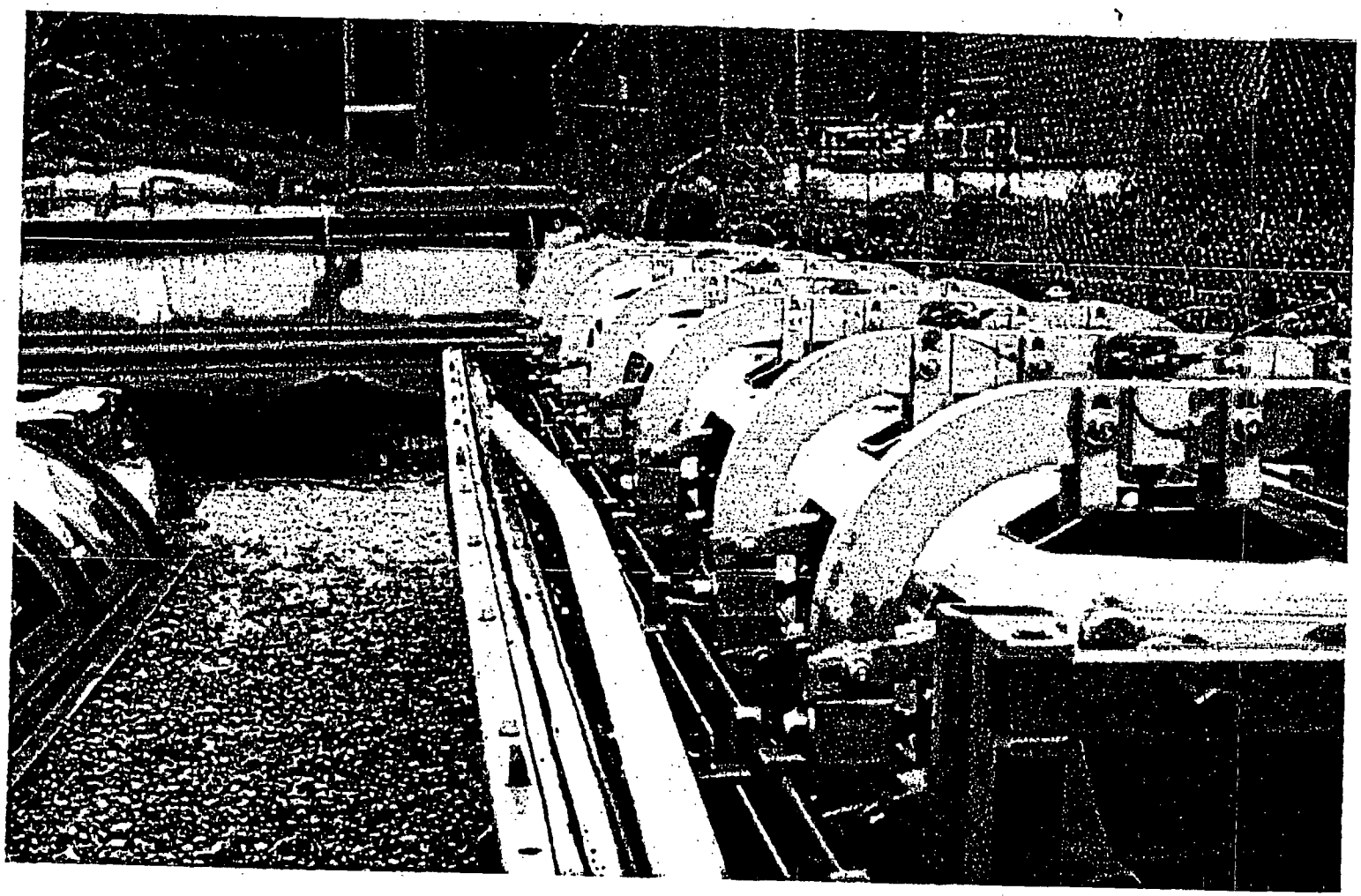

Figure 2-5.3-5 Side Drop onto Container Top

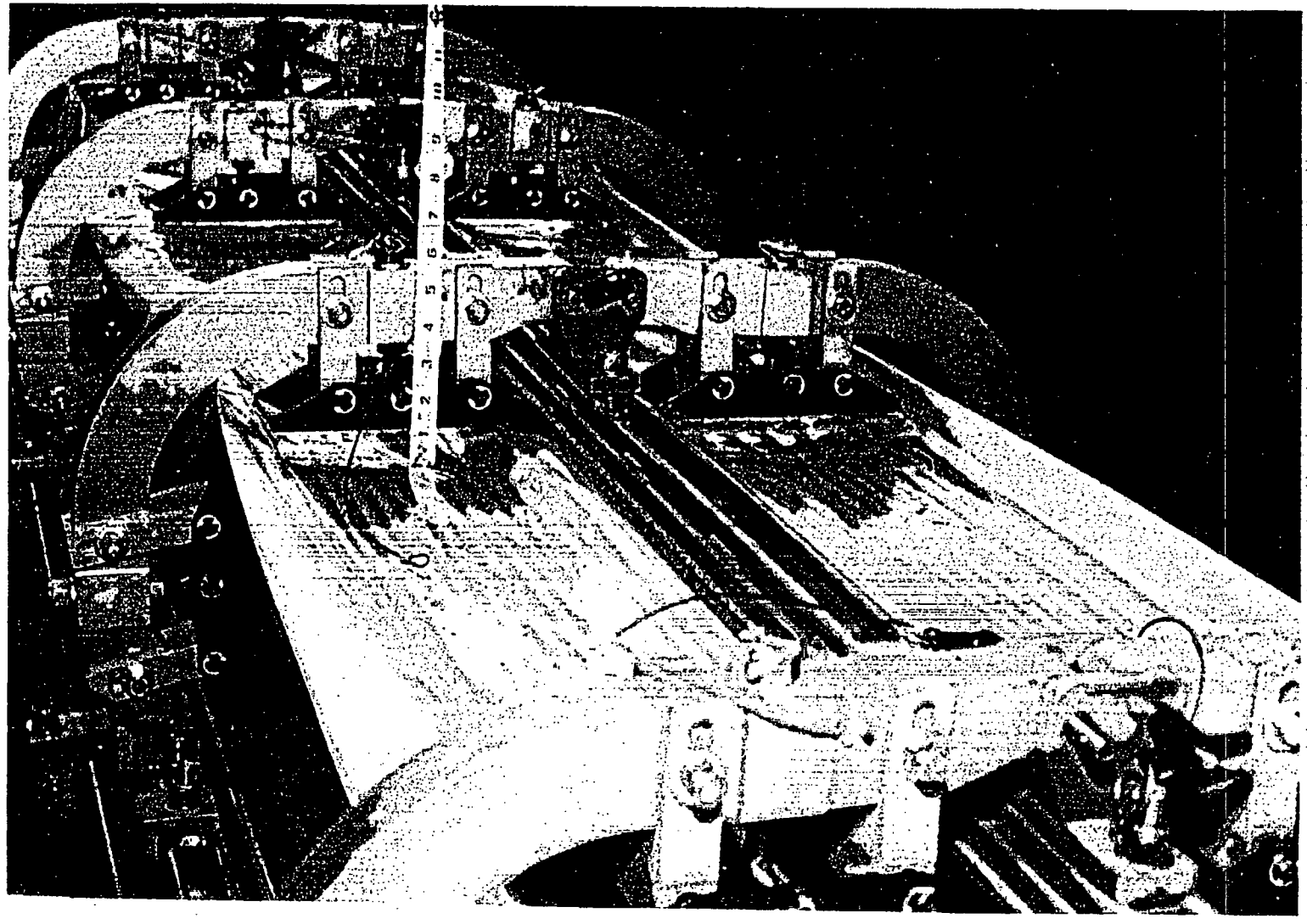

Figure 2-5.3-6 Side Drop onto Container Top

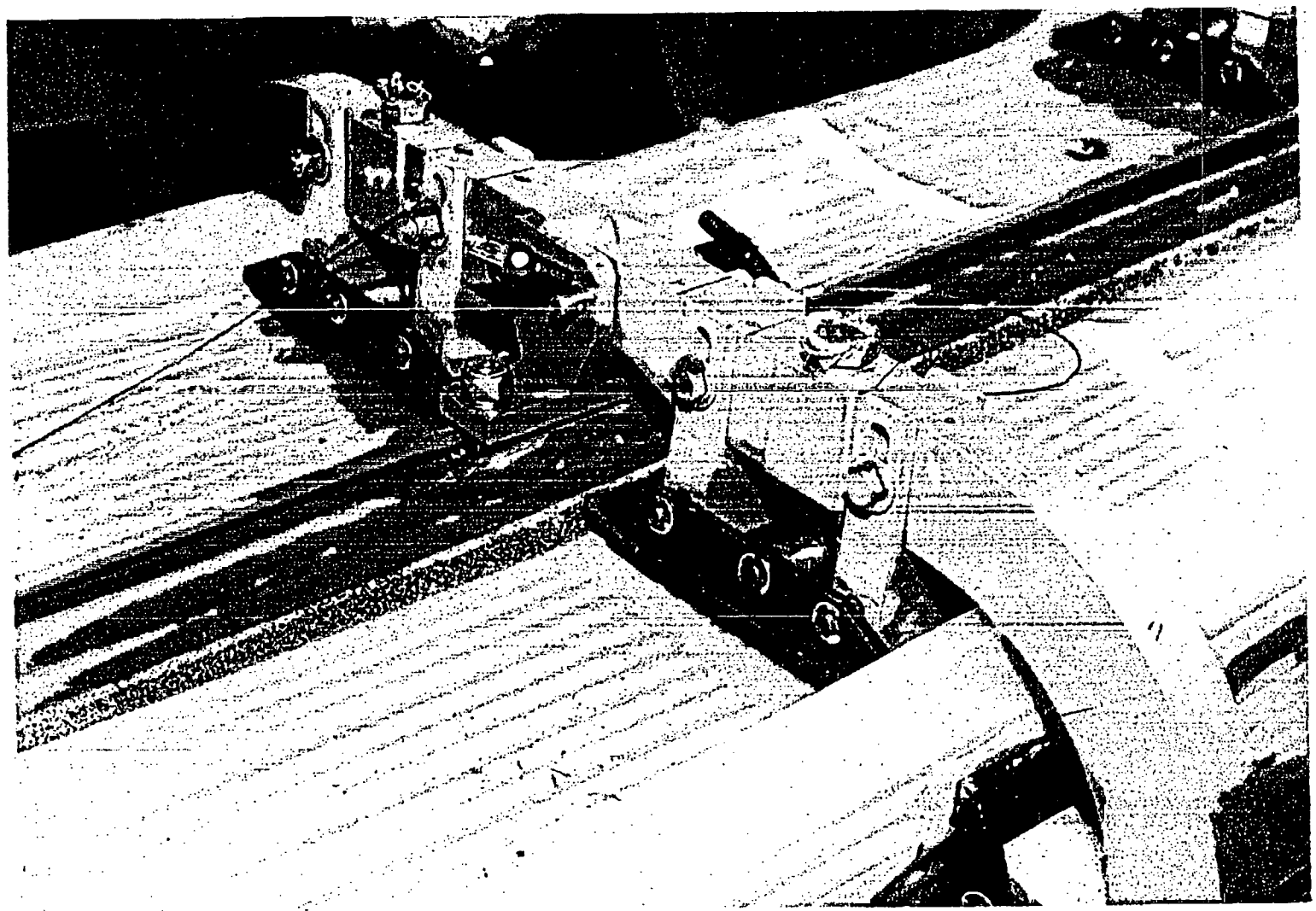

Figure 2-5.3-7 Side Drop onto Container Top

**Figure 2-5.3-8 Side Drop onto Container Top**

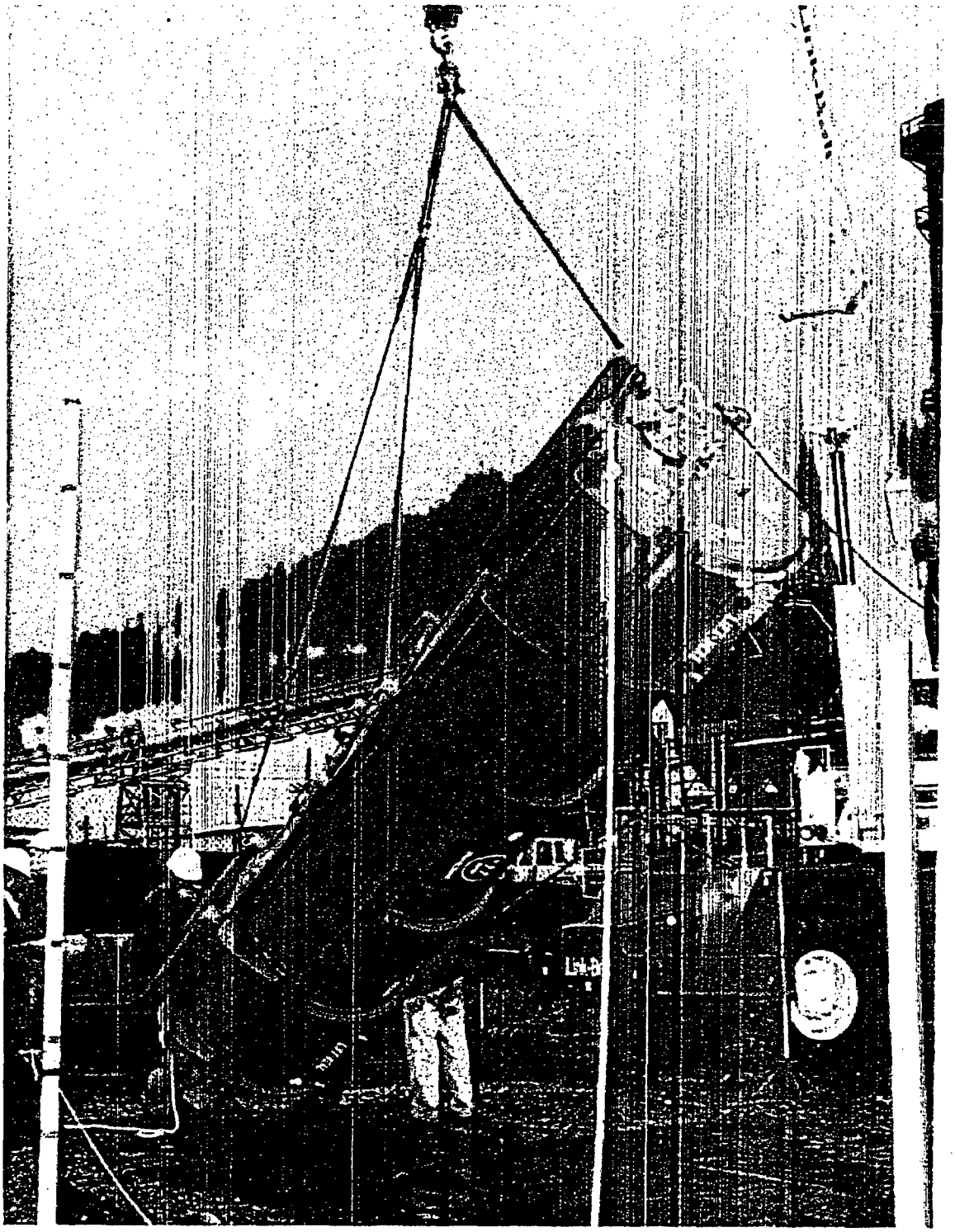

Figure 2-5.3-9 Side Drop with Slapdown onto Clamp Frames

Figure 2-5.3-10 Side Drop with Slapdown onto Clamp Frames

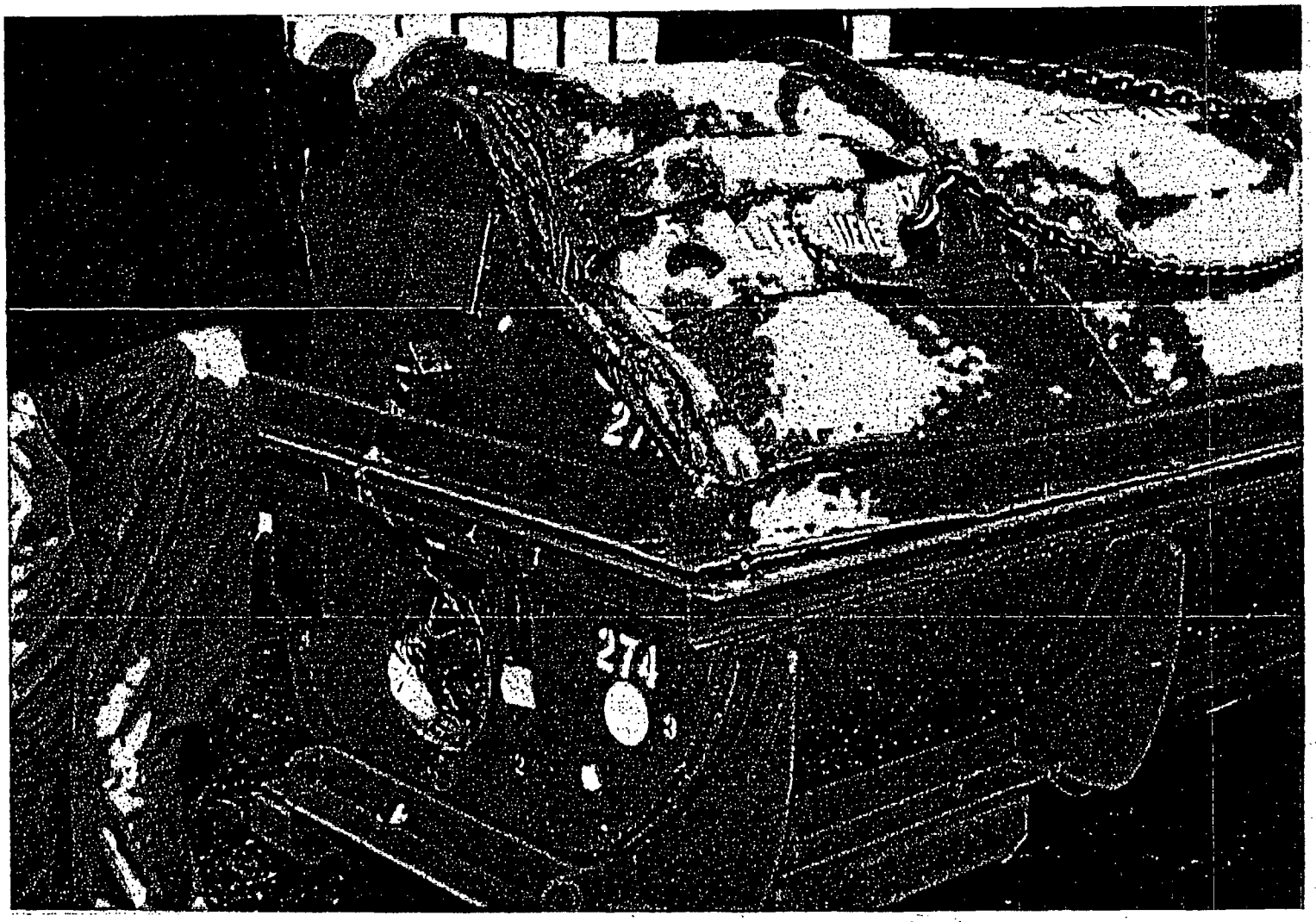


Figure 2-5.3-11 Side Drop with Slapdown onto Clamp Frames

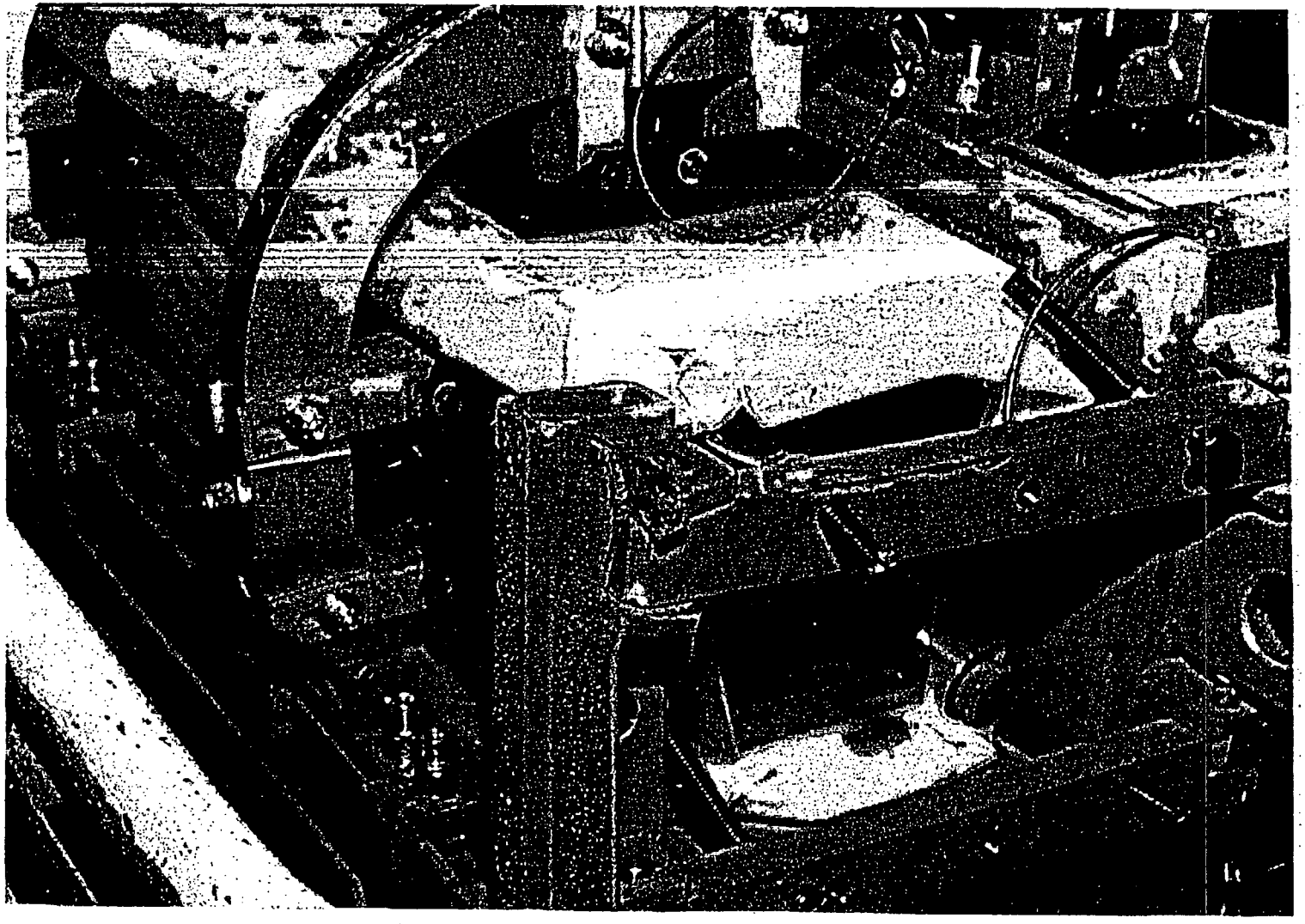

Figure 2-5.3-12 Side Drop with Slapdown onto Clamp Frames

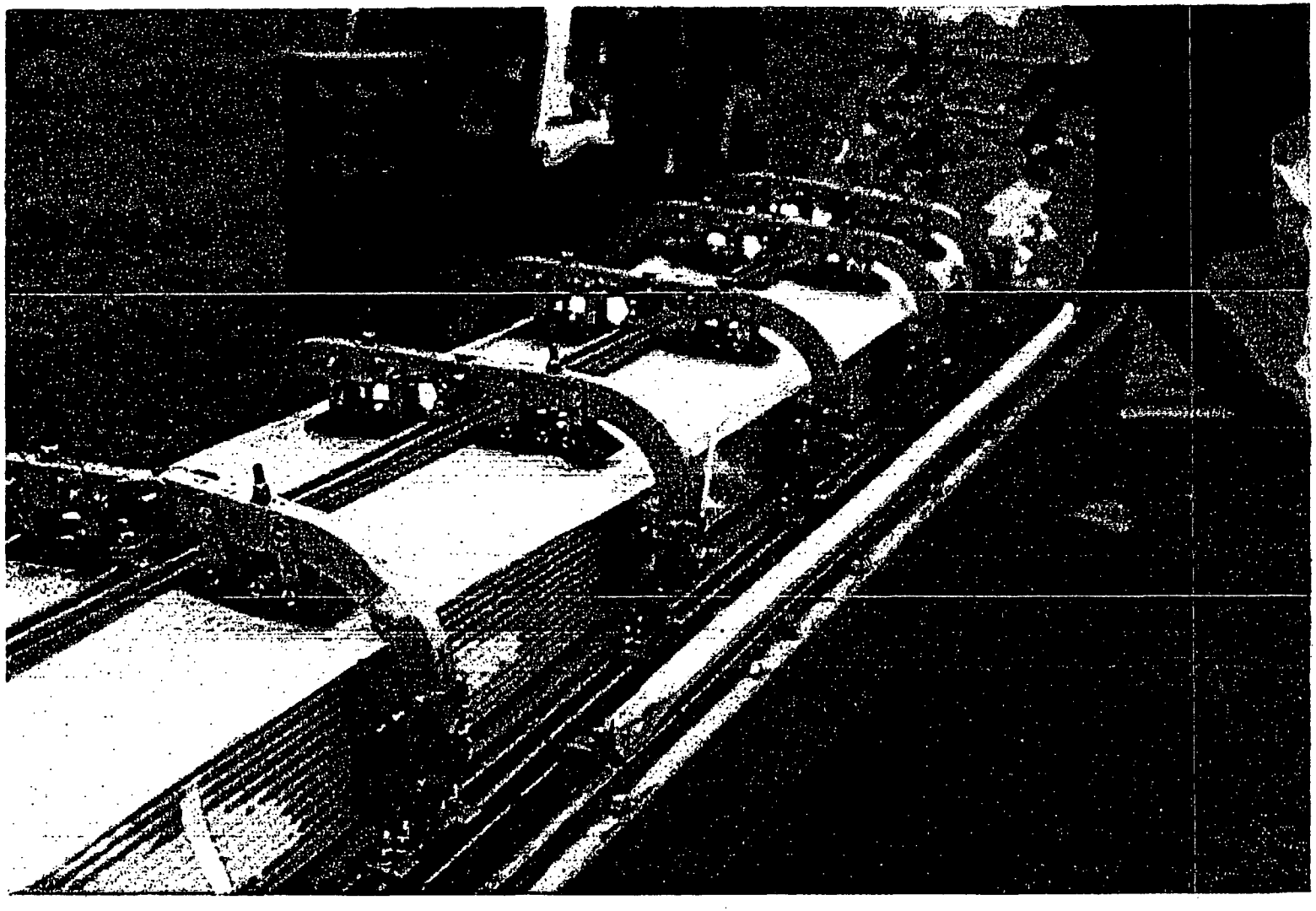

Figure 2-5.3-13 Side Drop with Slapdown onto Clamp Frames

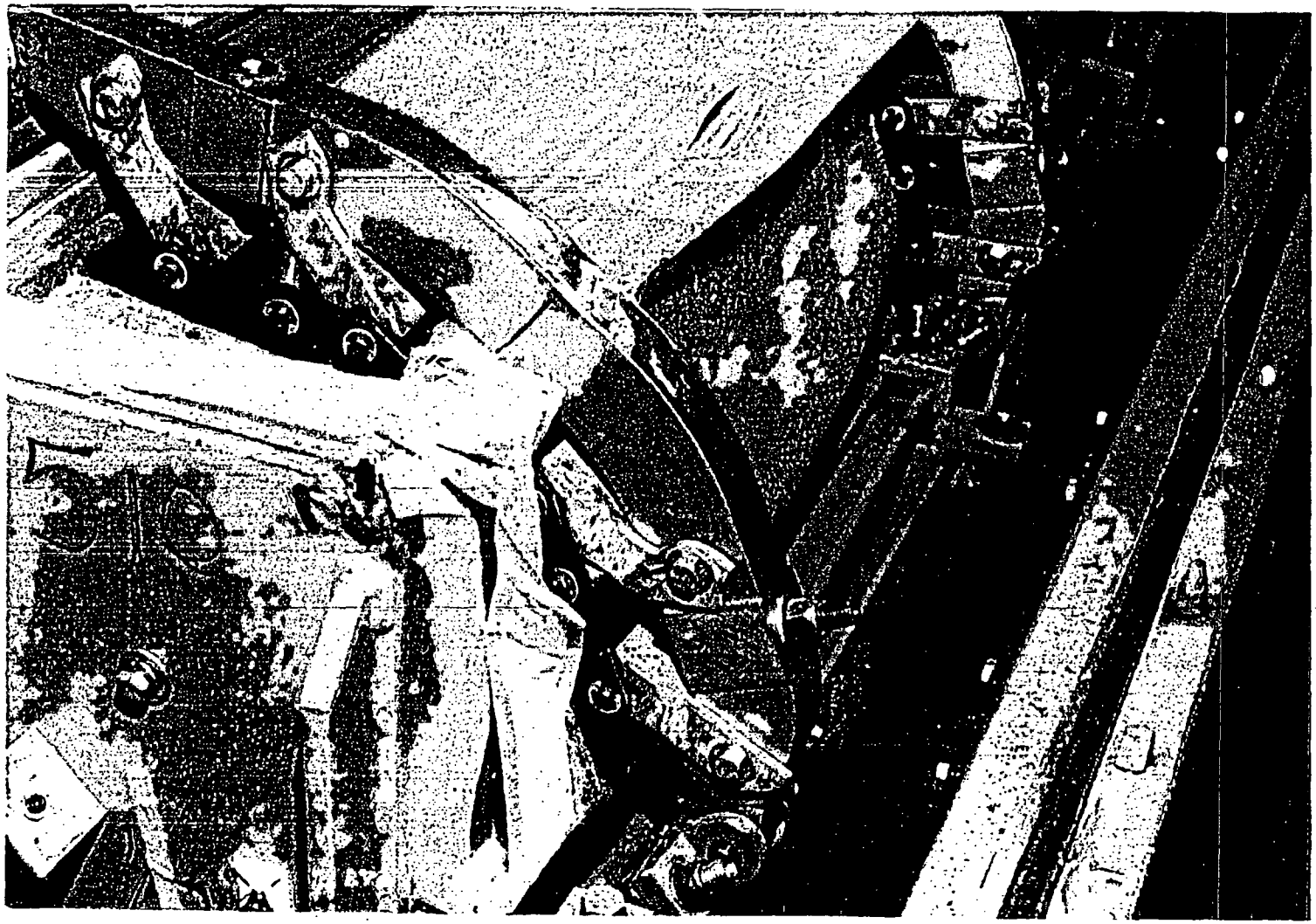

Figure 2-5.3-14 Side Drop with Slapdown onto Clamp Frames

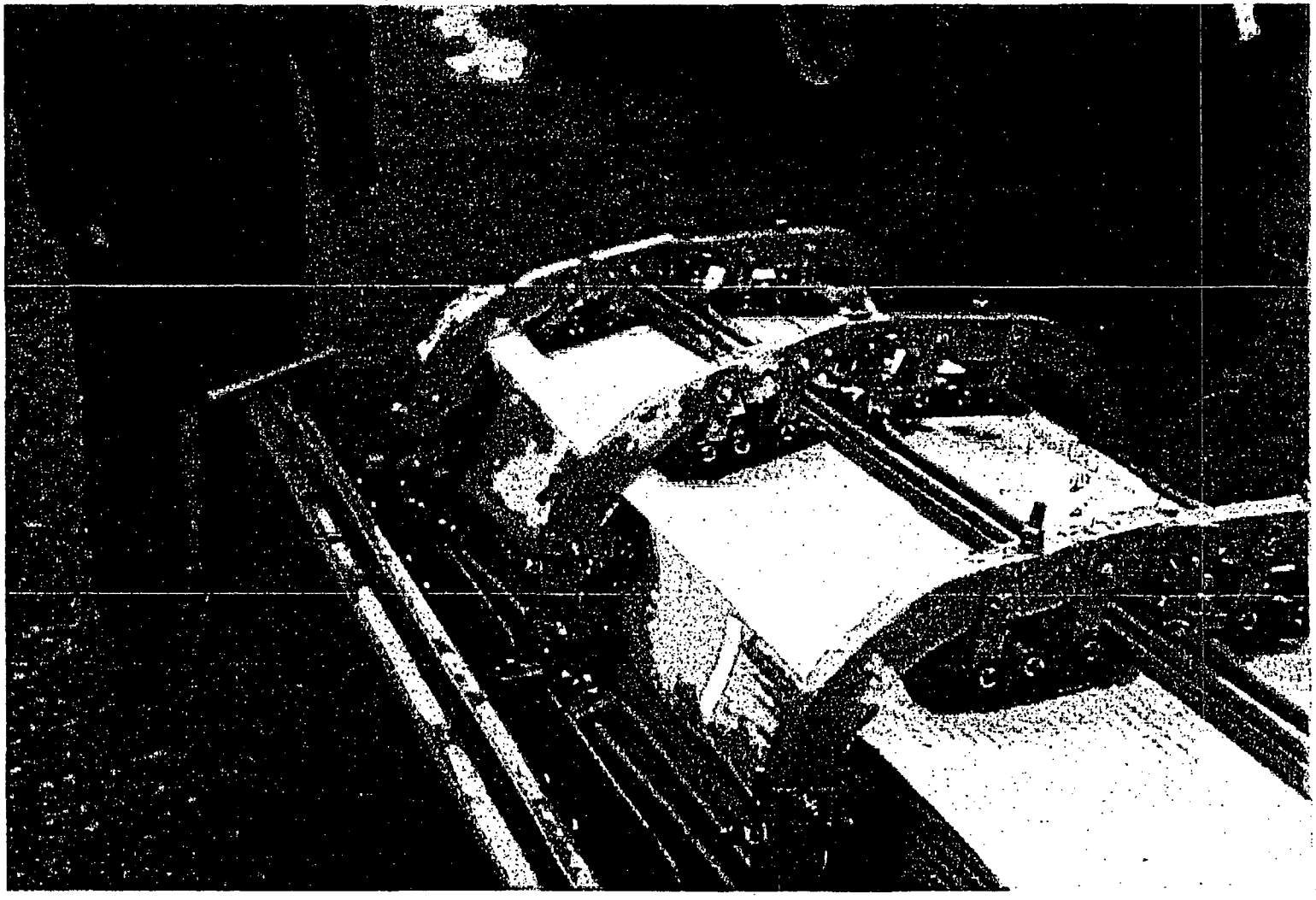

Figure 2-5.3-15 Side Drop with Slapdown onto Clamp Frames

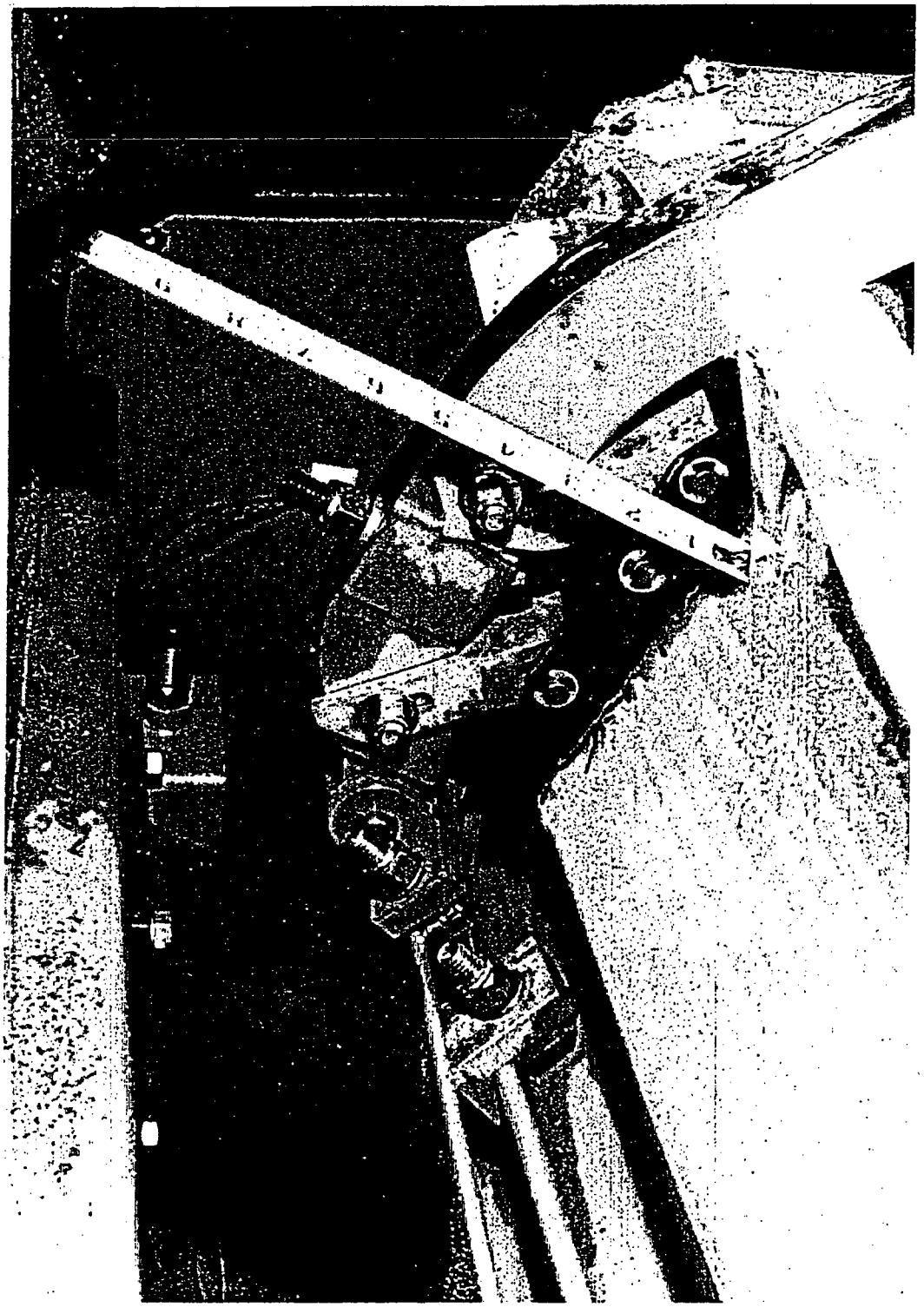

**Figure 2-5.3-16 Side Drop with Slapdown onto Clamp Frames**

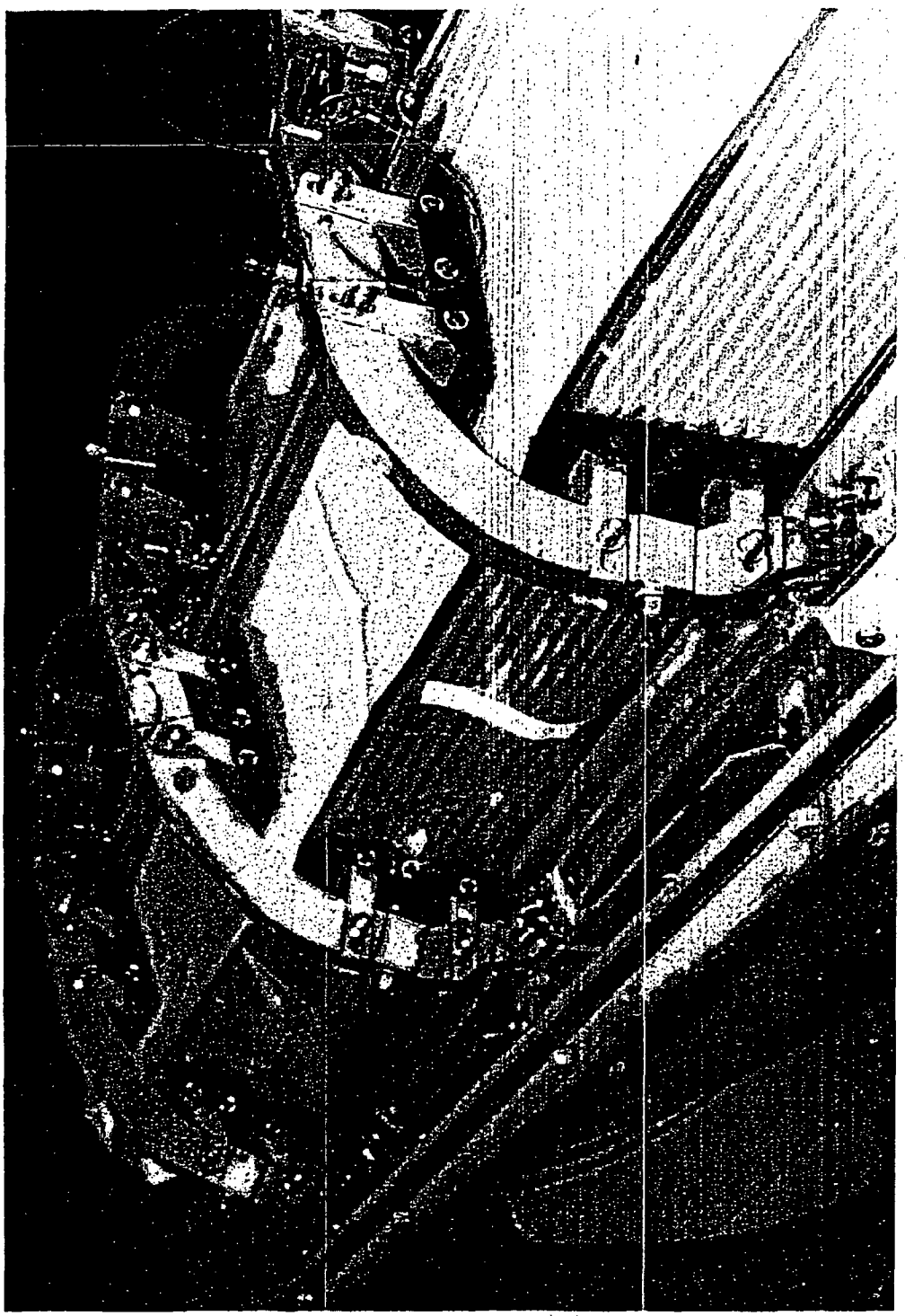

Figure 2-5.3-17 Side Drop with Slapdown onto Clamp Frames

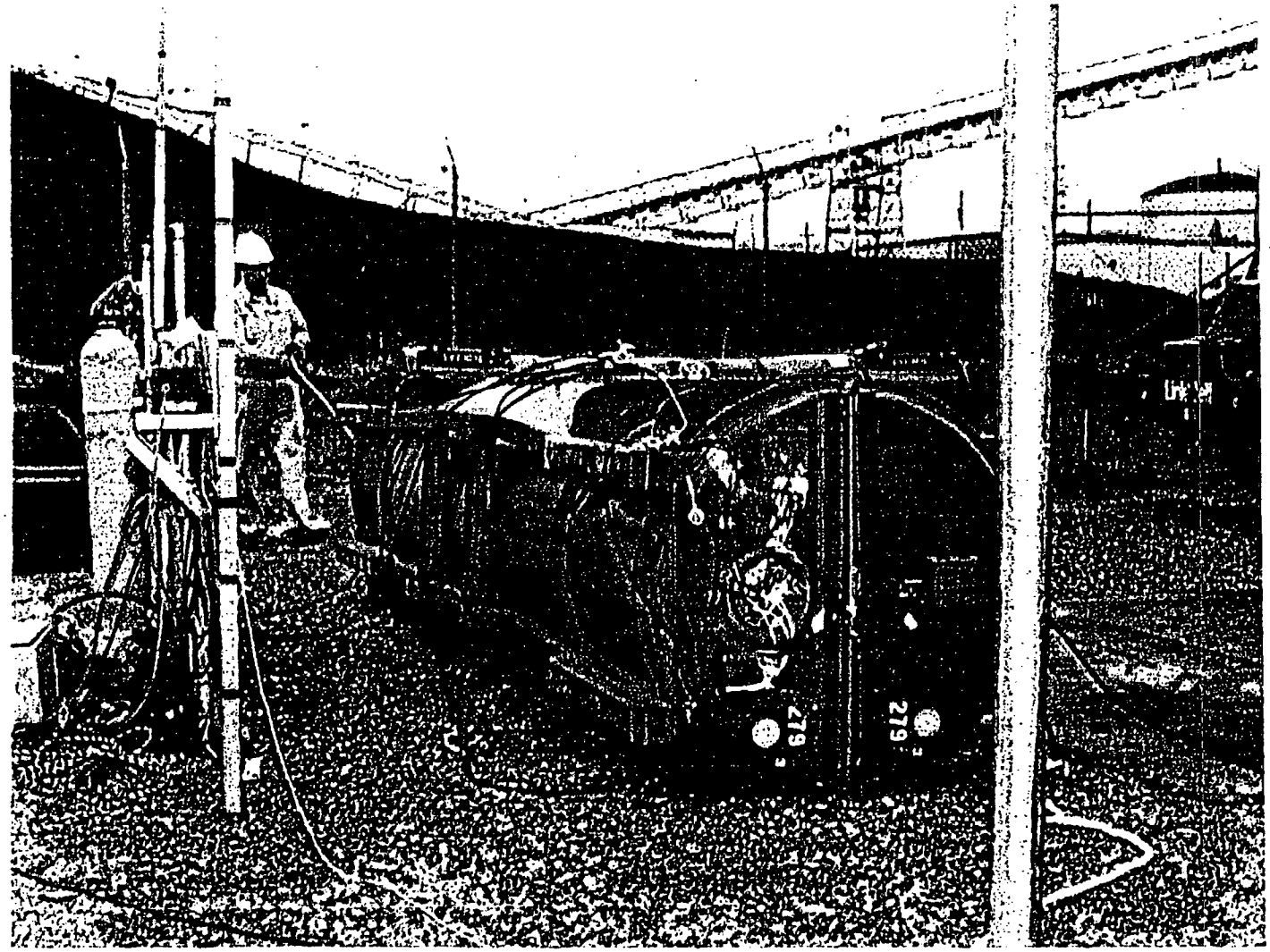

Figure 2-5.3-18 Side Drop with Slapdown onto Clamp Frames

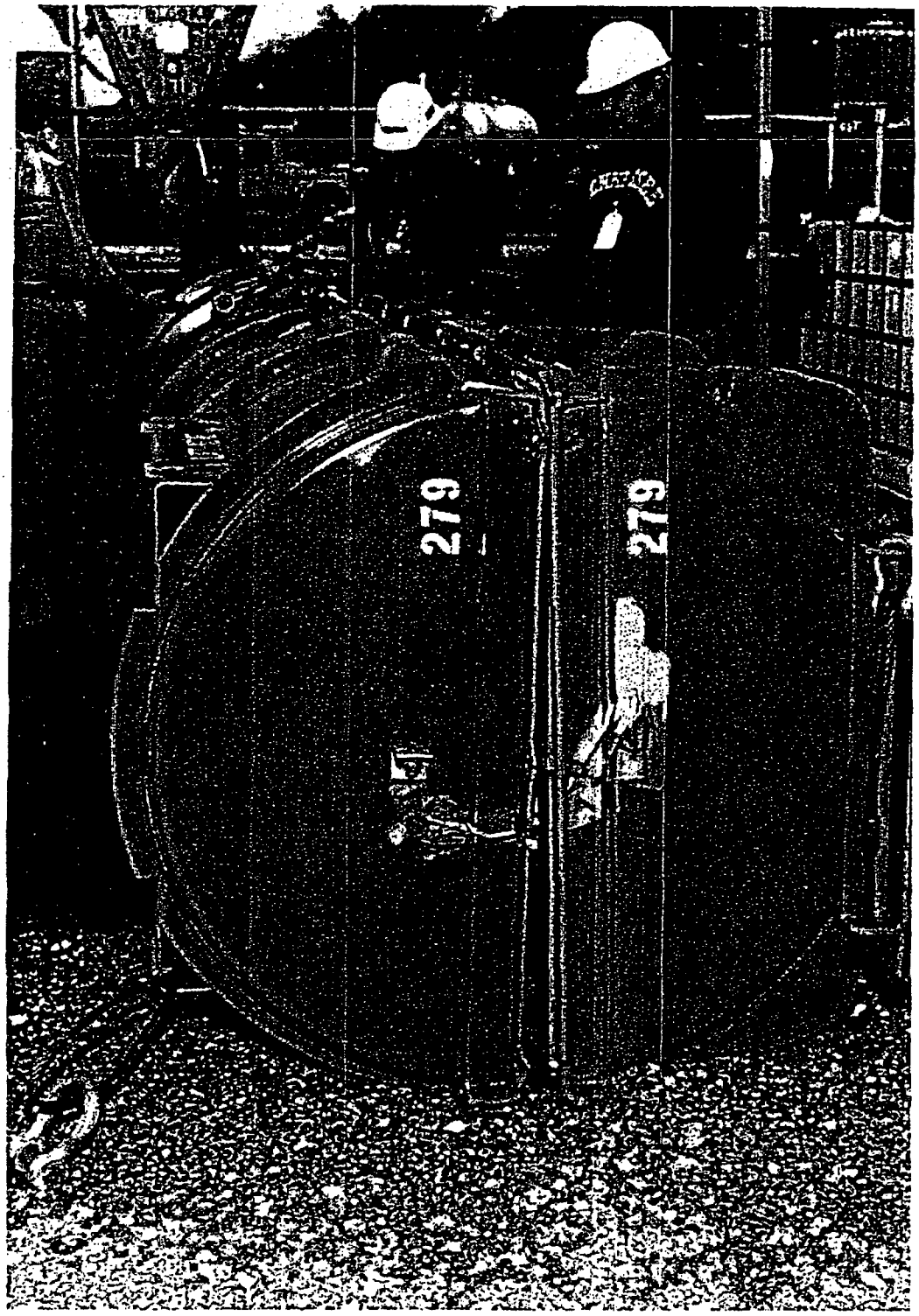


Figure 2-5.3-19 Side Drop onto Package Closure

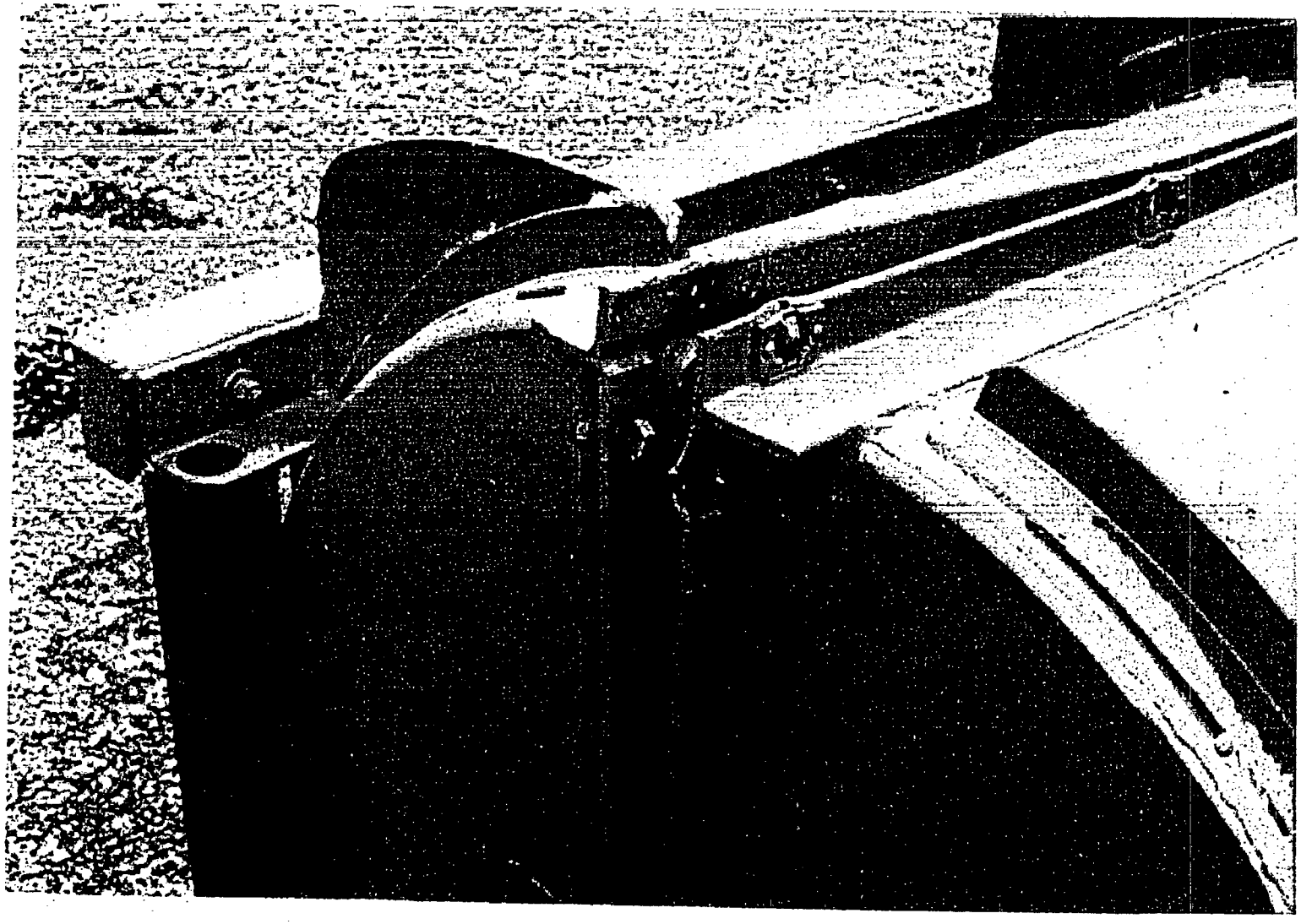

Figure 2-5.3-20 Side Drop onto Package Closure

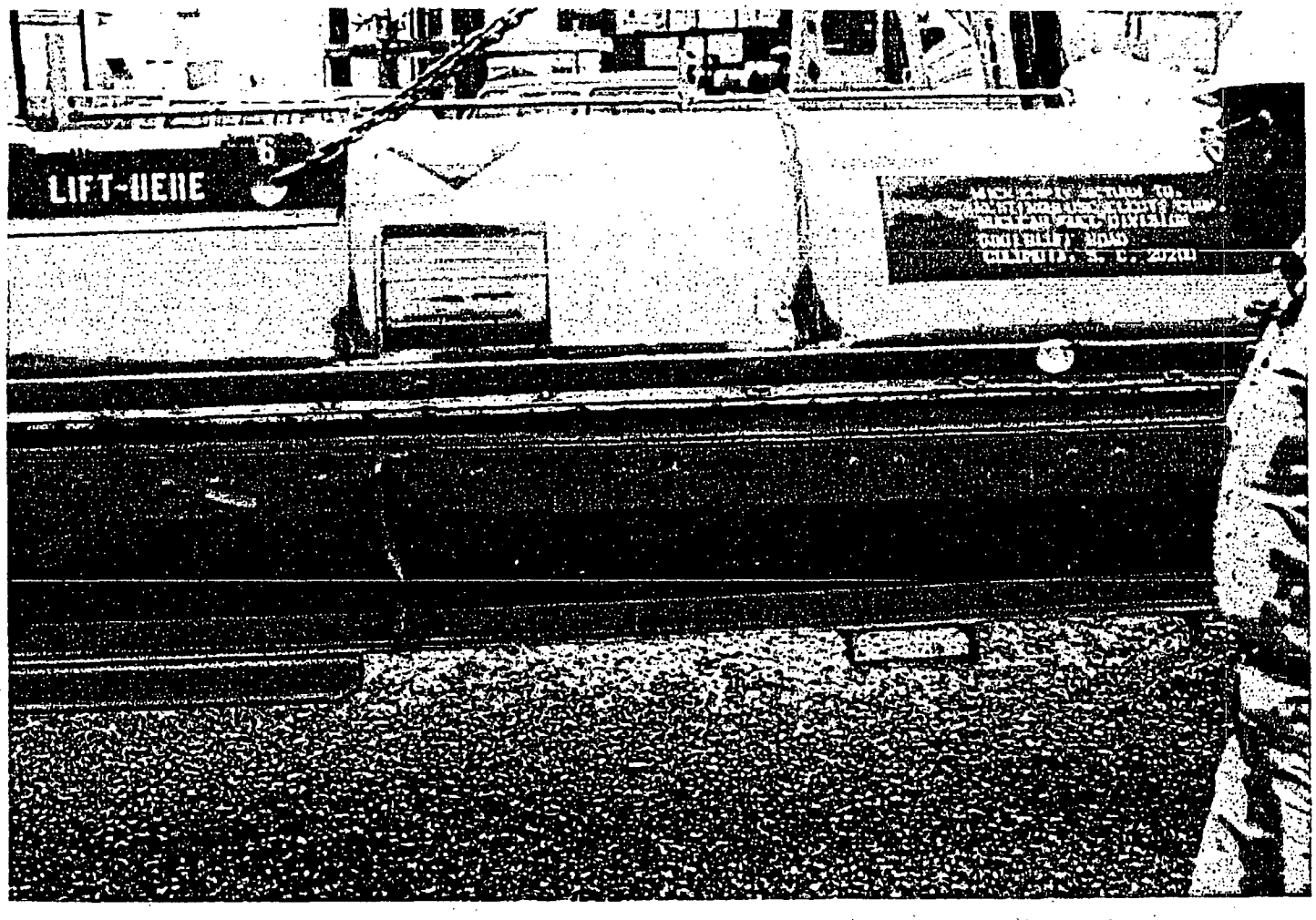


Figure 2-5.3-21 Side Drop onto Package Closure

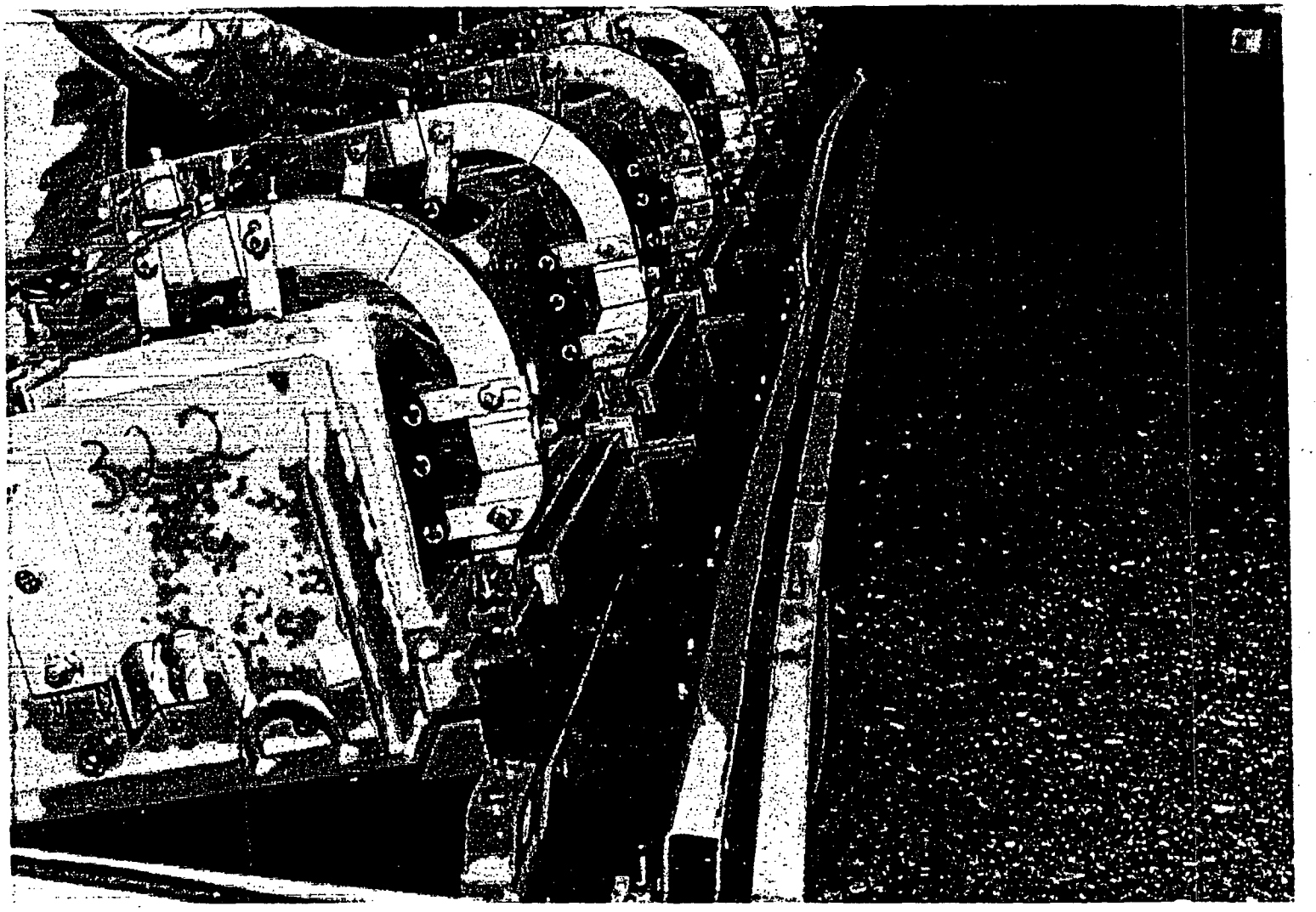

Figure 2-5.3-22 Side Drop onto Package Closure

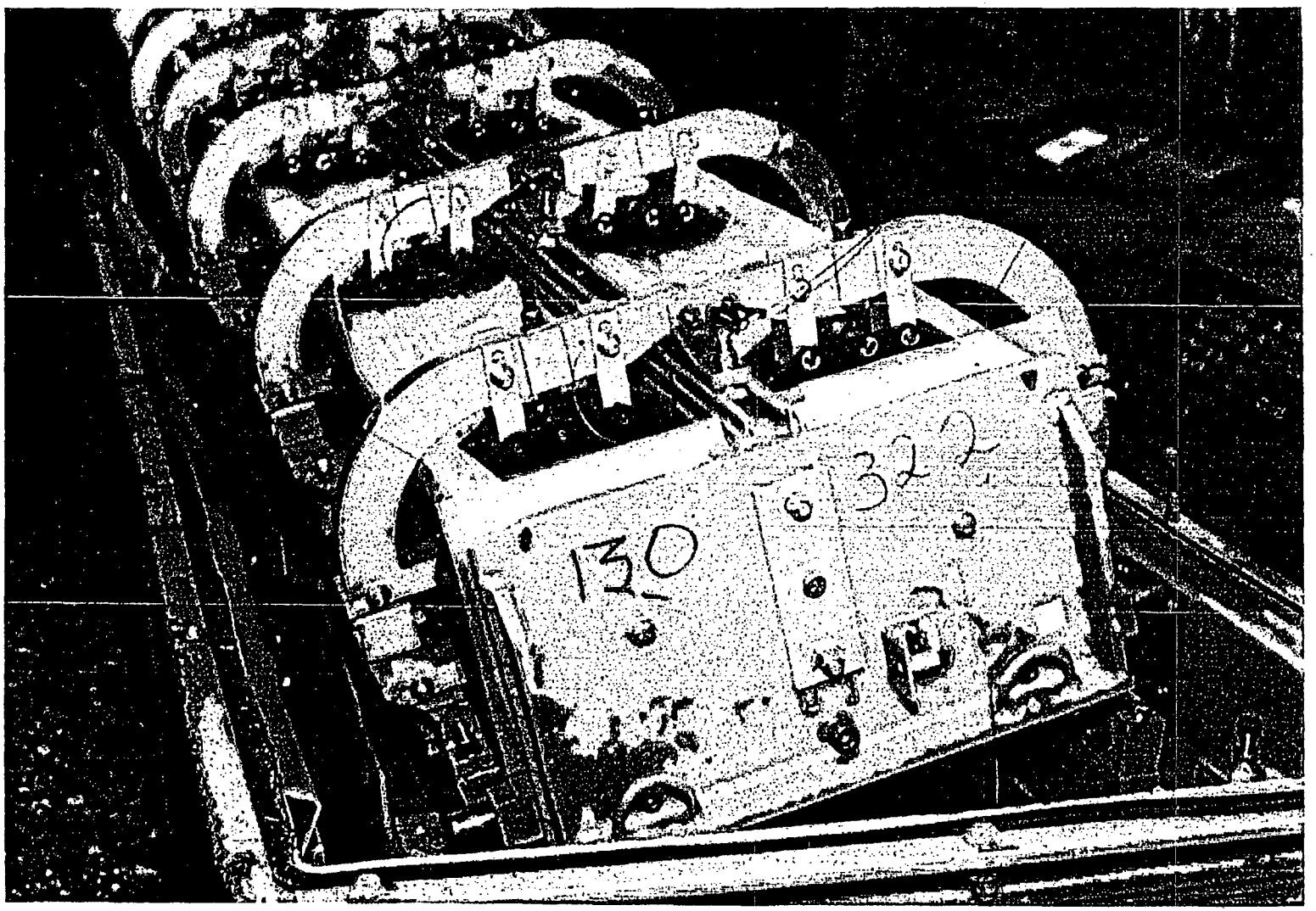


Figure 2-5.3-23 Side Drop onto Package Closure

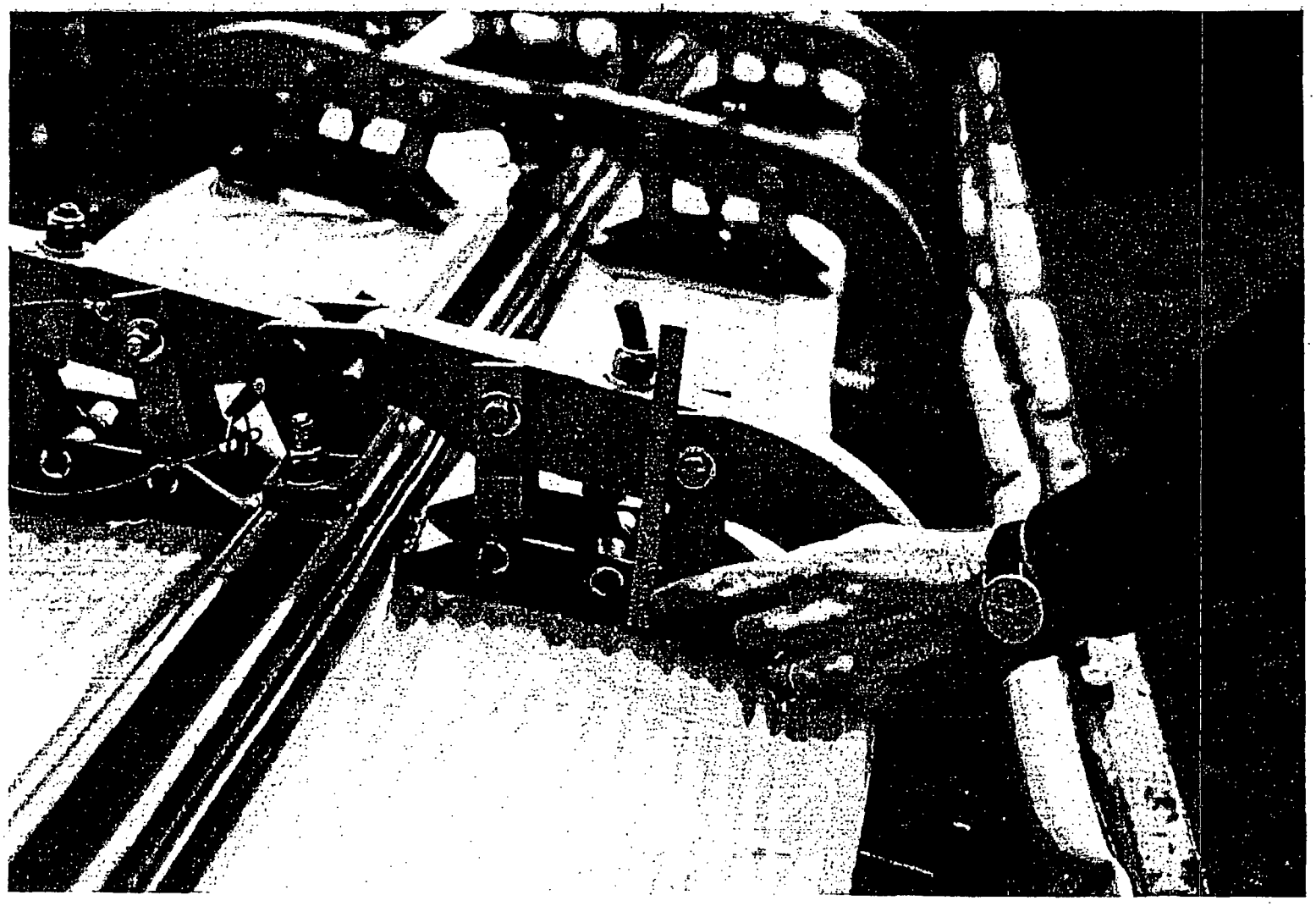

Figure 2-5.3-24 Side Drop onto Package Closure

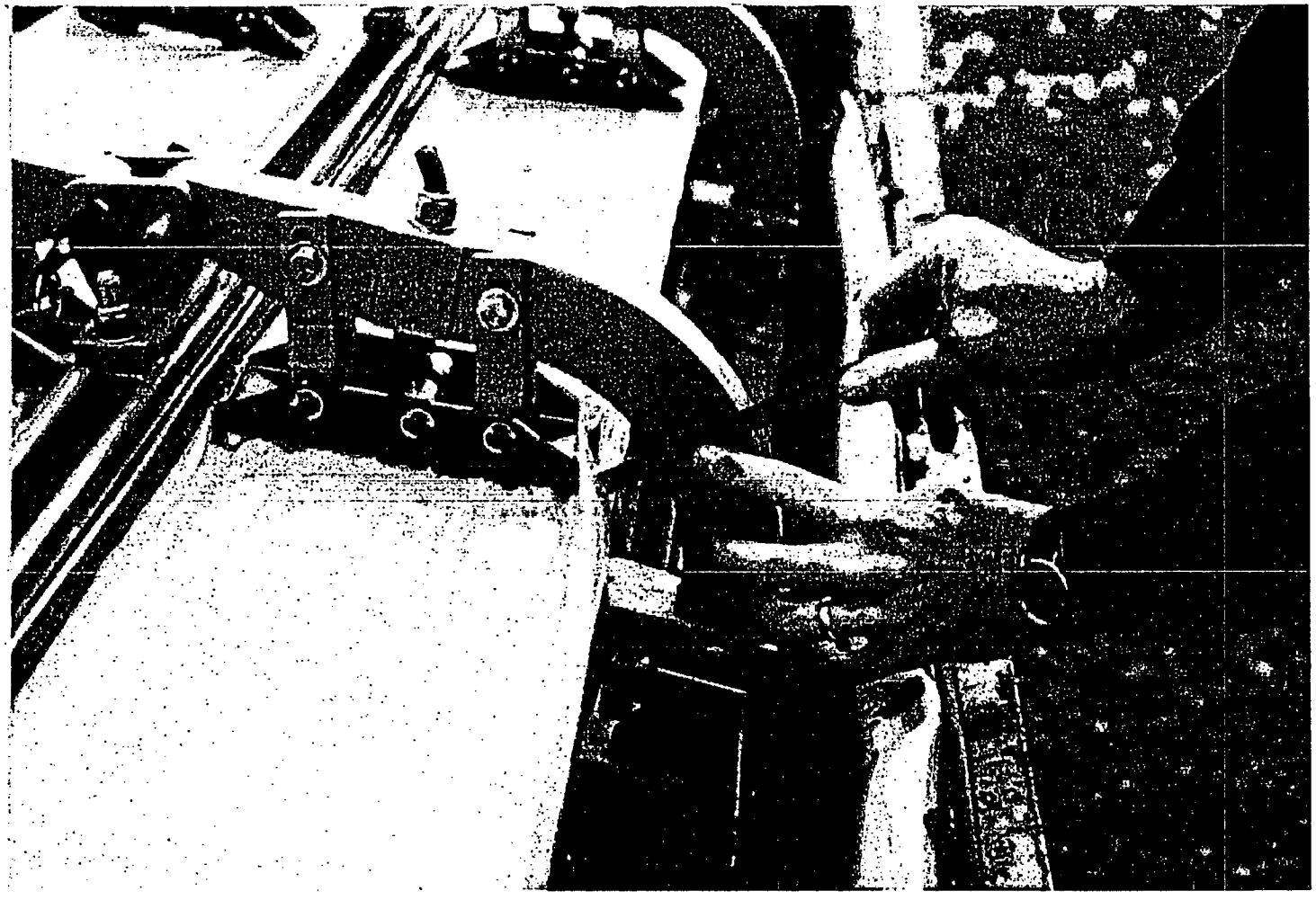

Figure 2-5.3-25 Side Drop onto Package Closure

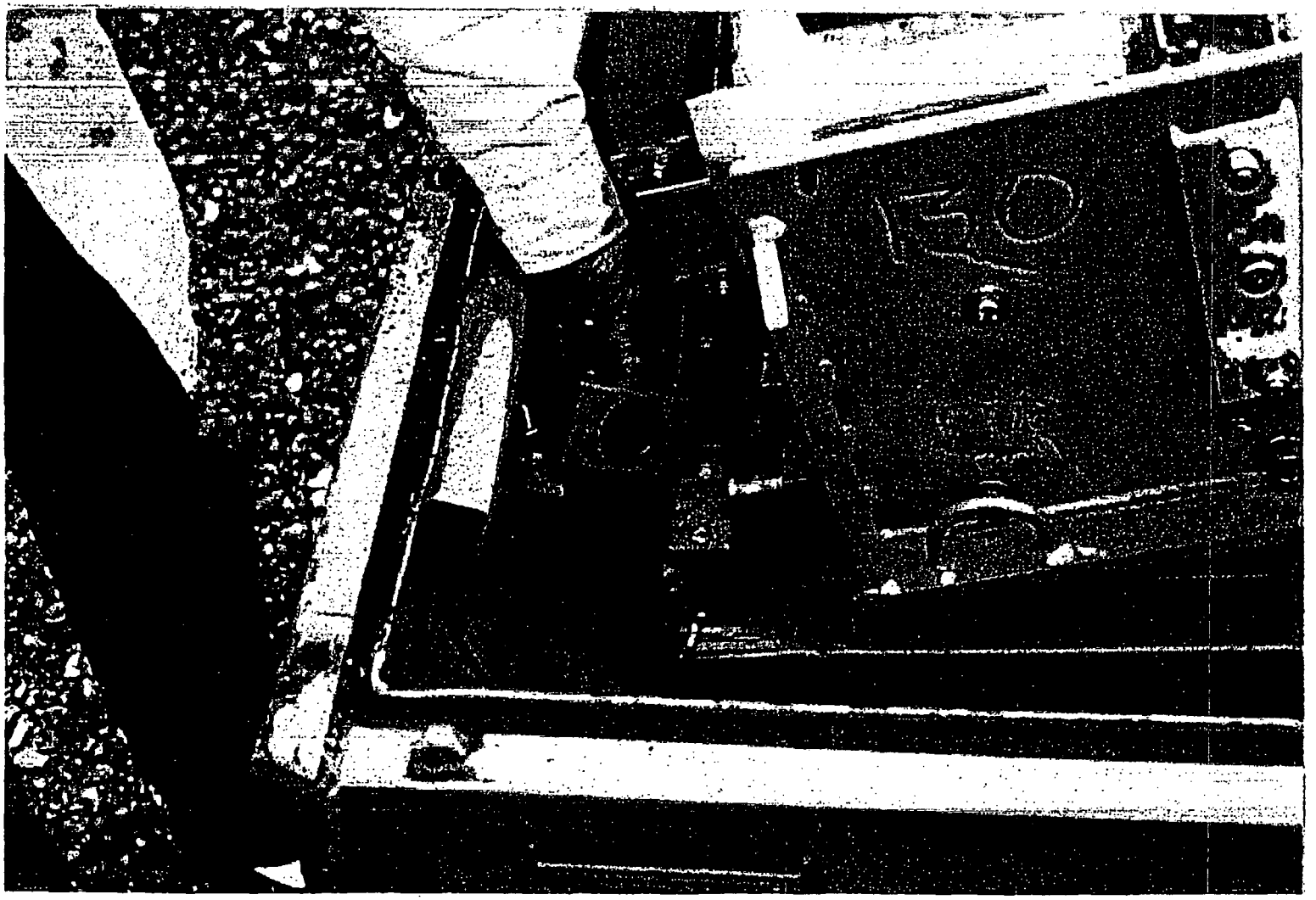

Figure 2-5.3-26 Side Drop onto Package Closure

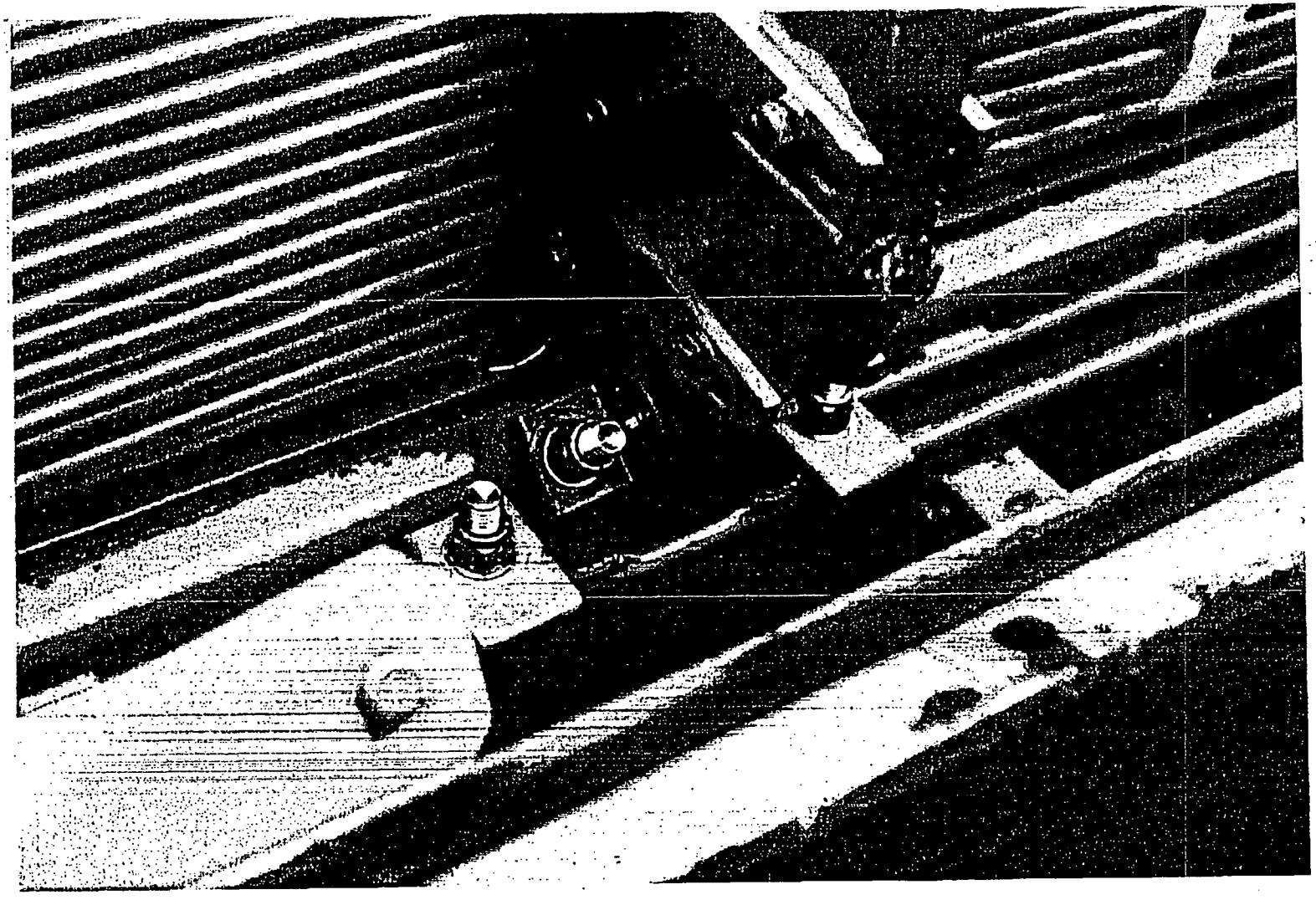

Figure 2-5.3-27 Side Drop onto Package Closure

# APPENDIX 2-5.4
# CLAMPING FRAME COMPRESSION TEST RESULTS

## CLAMPING FRAME COMPRESSION TEST RESULTS

Figure 2-5.4-1 provides information for a clamping frame that was compression tested to ultimate failure. The frame was attached to a testing fixture with two 7/16" clevis pins. A compressive load was applied until the pins failed at a load of 44,500 lbs.

The pins were then removed and the clamping frame was tested by itself. Figure 2-5.4-2 shows that this frame was compressively loaded until it failed due to bending. The ultimate applied load was 80,250 lbs and the total deflection was approximately 6.5 inches.

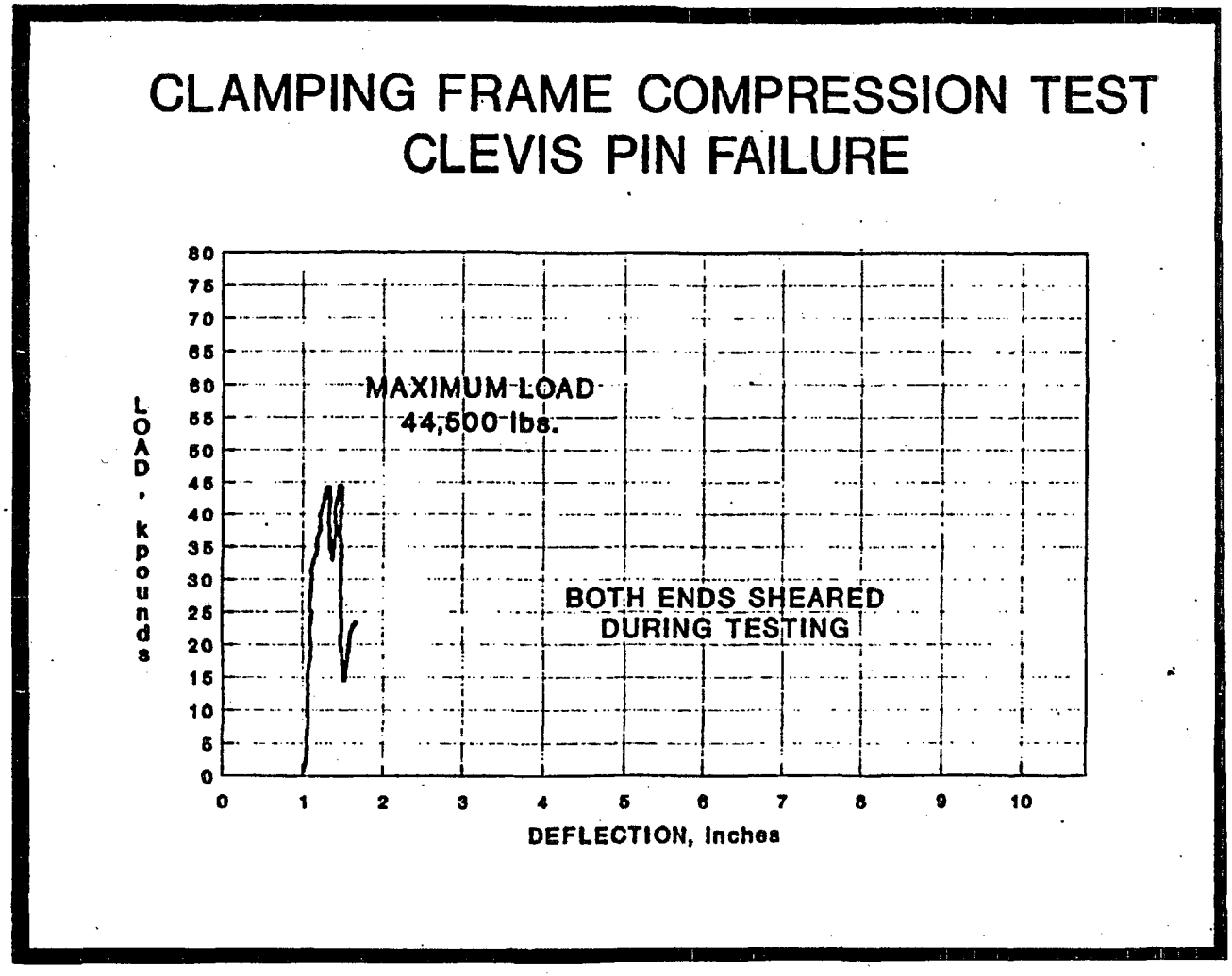
CLAMPING FRAME COMPRESSION TEST
CLEVIS PIN FAILURE
MAXIMUM LOAD
44,500 lbs.
BOTH ENDS SHEARED
DURING TESTING
LOAD - kpounds
DEFLECTION, Inches
0
5
10
15
20
25
30
35
40
45
50
55
60
65
70
75
80
0
1
2
3
4
5
6
7
8
9
10

Figure 2-5.4-1

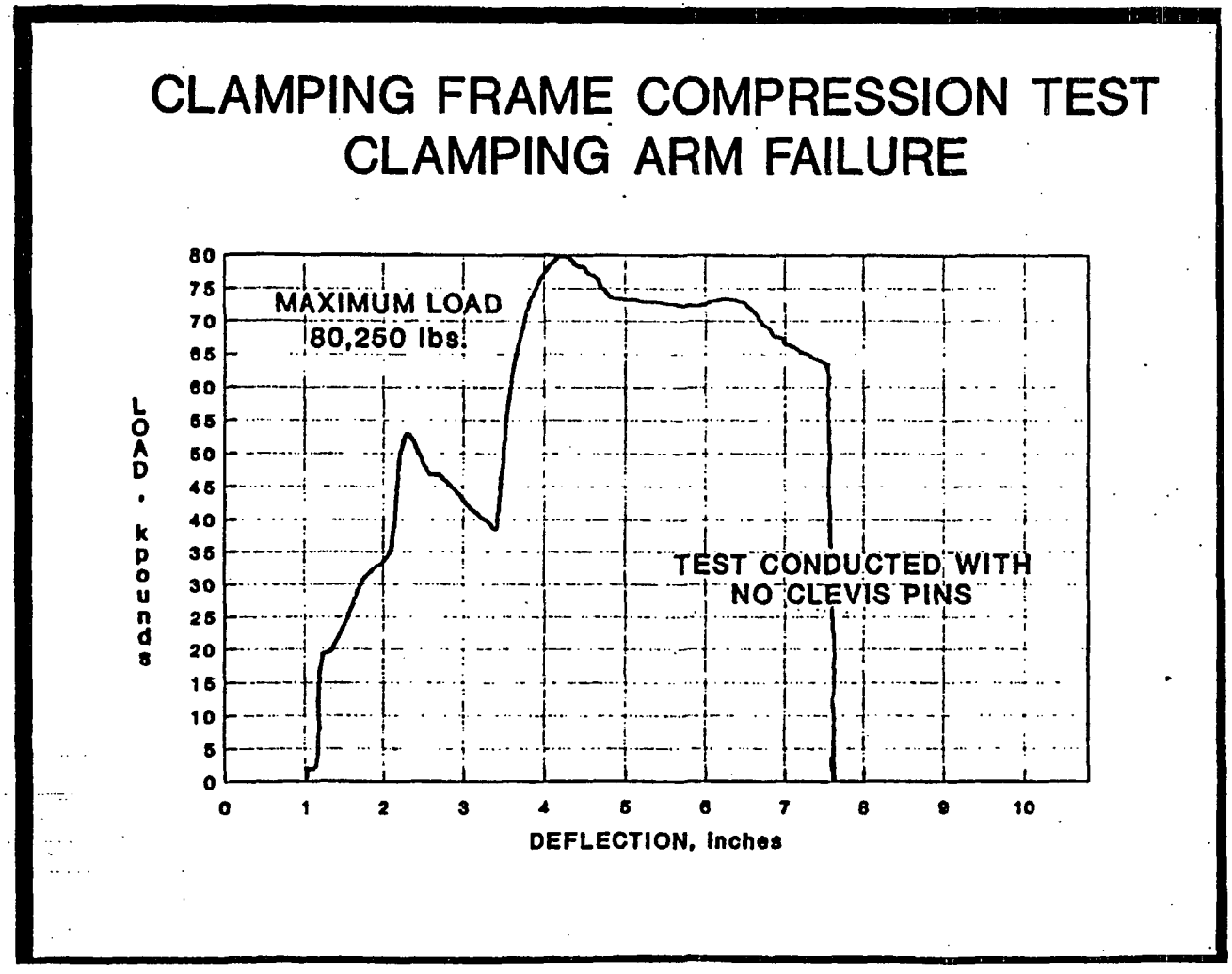
CLAMPING FRAME COMPRESSION TEST
CLAMPING ARM FAILURE
MAXIMUM LOAD
80,250 lbs.
TEST CONDUCTED WITH
NO CLEVIS PINS
LOAD - kpounds
0
5
10
15
20
25
30
35
40
45
50
55
60
65
70
75
80
0
1
2
3
4
5
6
7
8
9
10
DEFLECTION, Inches

Figure 2-5.4-2

# APPENDIX 2-5.5
# MCC-3/MCC-4 BOUNDING CASE ASSESSMENT

## MCC-3/MCC-4 BOUNDING CASE ASSESSMENT

With the exception of overall length and weight, the Westinghouse MCC-4 container is essentially identical in design to the MCC-3 container (see Appendix 2-2 for component weights). The following subsections provide justification for asserting the MCC-3 container is the bounding case for the MCC-4 container for all tests.

### 2-4.5.1 Flat Side Drop onto Container Top

The clamping frames are shown in previous sections to be the main structural component for retaining the fuel assemblies in a flat side drop onto the container top. The tested MCC-3 container successfully utilized seven clamping frames to retain each fuel assembly (14 total clamping frames). The clamping frames resist a load equal to the weight of the fuel assemblies plus the weight of the internal structure. For the MCC-3, the static load per clamping frame is:

$$P_{MCC3} = \frac{(3{,}300 + 1{,}964)}{14} = 376 \text{ lbs/clamping frame}$$

The MCC-4 container utilizes a total of 20 clamping frames to retain the fuel assemblies (10 for each fuel assembly). The static load per clamping frame is:

$$P_{MCC4} = \frac{(3{,}870 + 3{,}118)}{20} = 349 \text{ lbs/clamping frame}$$

Thus, since the clamping frame design is identical for the two containers, it is readily seen that the MCC-4 container represents a less critical case than the MCC-3 for a flat side drop onto the container top.

### 2-4.5.2 Side Drop with Slapdown onto Internal Clamp Frames

It was shown previously in Section 2-4.2 that a drop oriented 30° from horizontal represented the worst case for the slapdown drop. This was based on a desire to maximize the package accelerations for both the primary and secondary (slapdown) impact. The computer program SCANS is again utilized to provide justification that the MCC-3 container response bounds that of the MCC-4 for the slapdown test.

As demonstrated in Section 2-4.2, the SCANS model for the MCC-3 container consisted of a simplified cylinder of homogeneous mass representing the fuel assemblies and internal structure (see Figure 2-5.5-1). The relative "softness" of the internal's shock mount system allows the internal structure, including fuel assemblies, to accurately be decoupled from the package shell (i.e., the internals and shell act as separately impacting bodies) during an impact event. The dimensional breakout used for the "impact limiter", "cap" and "body" is arbitrarily chosen to provide input values for SCANS.

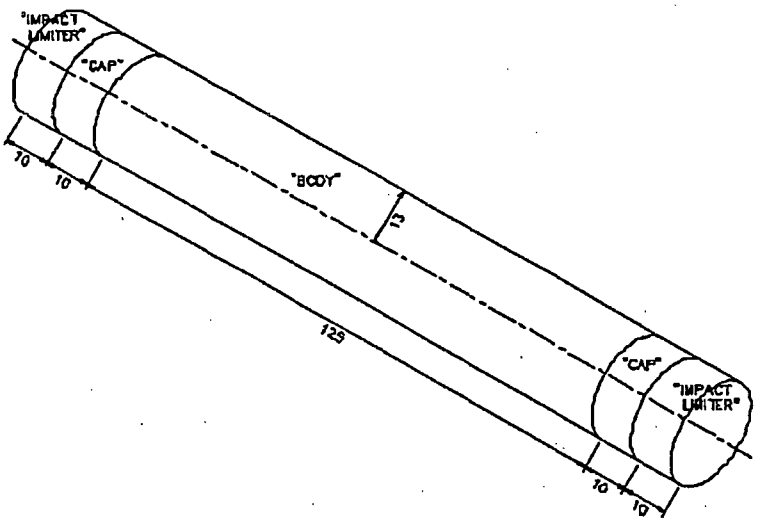


**Figure 2-5.5-1 SCANS Model of the MCC-3 Container Fuel and Internals**

Similarly, the SCANS Model of the MCC-4 container is illustrated in Figure 2-5.5-2.

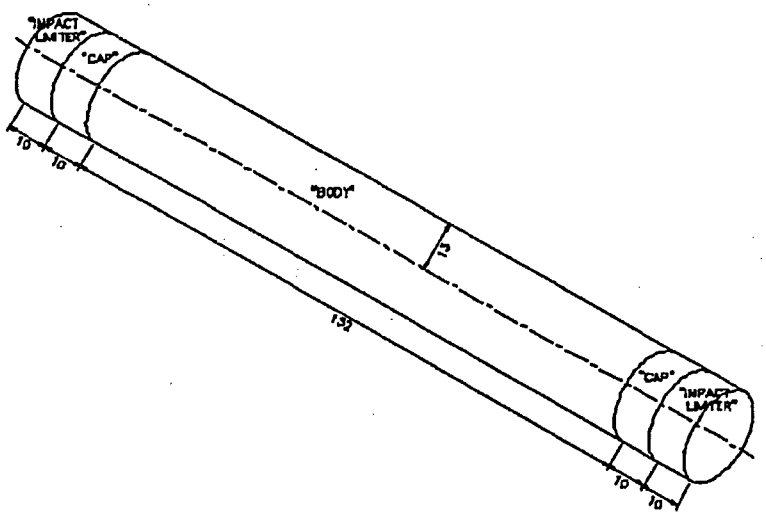


**Figure 2-5.5-2 SCANS Model of the MCC-4 Container Fuel and Internals**

The sum of these dimensions does, however, equal the length of the internals. A uniform density of 0.06009 lbs/in$^3$ is used for the MCC-3 model and 0.06855 lbs/in$^3$ is used for the MCC-4 model corresponding to a fuel plus internals weight of 5,264 and 6,988 pounds, respectively. The 13 inch package radius is based on the approximate cross-sectional area of the internal structure equated to a circular section. Table 2-5.5-1 summarizes the SCANS results from Section 2-4.2 and compares the results to a MCC-4 container of the same angular drop orientation and stiffness.

**Table 2-5.5-1 SCANS Results for the MCC-3 and MCC-4 Containers; Internals Weight and Geometry**

| K (kips/in) | θ | MCC-3 (5,264 lbs) | | MCC-4 (6,988 lbs) | |
|---|---|---|---|---|---|
| | | Primary (g's) | Secondary (g's) | Primary (g's) | Secondary (g's) |
| 5 | 15° | 14.1 | 22.6 | 12.5 | 19.7 |
| | 30° | 17.2 | 22.5 | 13.1 | 19.7 |
| | 45° | 18.0 | 21.1 | 15.3 | 18.7 |
| 10 | 15° | 19.8 | 32.1 | 16.9 | 27.9 |
| | 30° | 22.1 | 31.9 | 18.8 | 27.9 |
| | 45° | 25.9 | 29.7 | 22.0 | 26.4 |
| 20 | 15° | 28.3 | 45.5 | 24.3 | 39.6 |
| | 30° | 31.6 | 45.1 | 27.0 | 39.5 |
| | 45° | 37.0 | 41.7 | 31.5 | 37.2 |
| 50 | 15° | 45.2 | 72.1 | 38.8 | 62.8 |
| | 30° | 50.5 | 71.4 | 43.2 | 62.6 |
| | 45° | 59.1 | 65.5 | 50.4 | 58.5 |
| 100 | 15° | 64.2 | 102.1 | 55.2 | 88.9 |
| | 30° | 71.7 | 100.9 | 61.4 | 88.5 |
| | 45° | 84.1 | 92.3 | 71.6 | 82.4 |
| 200 | 15° | 91.0 | 144.2 | 78.3 | 125.6 |
| | 30° | 101.8 | 142.5 | 87.0 | 125.1 |
| | 45° | 119.3 | 130.0 | 101.6 | 116.2 |

As before the analyses assume a wide range of stiffnesses for the "fuel/internal structure" impact limiters. The result is a study of the impact accelerations versus stiffnesses and initial impact angle for the MCC-3 and MCC-4 containers.

For purposes of comparison, Table 2-5.5-2 provides similar results when using the full package weight and geometry (7,544 pounds, 194.5 inches long and a 20.25 inch radius for the MCC-3 container and 10,553 pounds, 226.0 inches long and a 20.25 inch radius for the MCC-4 container).

**Table 2-5.5-2 SCANS Results for the MCC-3 and MCC-4 Containers; Full Weight and Geometry**

| K (kips/in) | 0 | MCC-3 (7,544 lbs) | | MCC-4 (10,553 lbs) | |
|---|---|---|---|---|---|
| | | Primary (g's) | Secondary (g's) | Primary (g's) | Secondary (g's) |
| 5 | 15° | 11.8 | 18.9 | 10.9 | 16.0 |
| | 30° | 13.3 | 18.6 | 10.8 | 16.0 |
| | 45° | 15.5 | 17.2 | 12.7 | 15.0 |
| 10 | 15° | 16.7 | 26.8 | 13.9 | 22.8 |
| | 30° | 18.9 | 26.5 | 15.6 | 22.7 |
| | 45° | 22.3 | 24.2 | 18.4 | 21.2 |
| 20 | 15° | 23.9 | 38.1 | 19.9 | 32.3 |
| | 30° | 27.0 | 37.5 | 22.4 | 32.2 |
| | 45° | 32.0 | 33.9 | 26.3 | 29.8 |
| 50 | 15° | 38.3 | 60.3 | 32.0 | 51.2 |
| | 30° | 43.3 | 59.4 | 35.9 | 51.0 |
| | 45° | 51.1 | 53.2 | 42.2 | 46.9 |
| 100 | 15° | 54.6 | 85.4 | 45.5 | 72.6 |
| | 30° | 61.6 | 84.0 | 51.0 | 72.1 |
| | 45° | 72.7 | 74.8 | 60.0 | 66.1 |
| 200 | 15° | 77.5 | 120.9 | 64.6 | 102.7 |
| | 30° | 87.5 | 118.8 | 72.5 | 102.0 |
| | 45° | 103.2 | 105.3 | 85.2 | 93.2 |

The above analyses consistently demonstrate that a shallow angle (≤30°) drop results in the worst case secondary impact (slapdown) acceleration. As previously stated, the angle 30° was chosen as the drop orientation to approach maximum accelerations for both the primary and the secondary impacts.

For a variety of stiffnesses and drop orientations, it is readily seen that the MCC-4 container accelerations are consistently lower than the MCC-3. Although the MCC-4 container is longer and heavier than the MCC-3, the impacted ends are virtually identical thereby allowing for a direct comparison of impact accelerations. The 10%-15% reduction in accelerations between the MCC-3 and MCC-4 containers verify that the MCC-3 container is a bounding case for the MCC-4 for the slapdown drop.

Of final note regarding the slapdown drop, although the acceleration is consistently less for the MCC-4 than for the MCC-3, it is recognized that the total impact force (acceleration x weight) for the MCC-4 container is somewhat greater than for the MCC-3. Two bounding analyses are provided in Sections 2-4.5.1 and 2-4.5.3 for the clamp frames and closure T-bolts, respectively. These analyses demonstrate that the MCC-3 container drop testing bounded the MCC-4 container for the loading on these components. Thus for the slapdown event, a reduction in the acceleration for the MCC-4 versus the MCC-3 will improve margins for these components.

### 2-4.5.3 Flat Side Drop onto Container Closure

The closure T-bolts are shown in previous sections to be adequate for a flat side drop onto the closure. The tested MCC-3 container utilized a total of 30 T-bolts to maintain closure of the outer shell halves. For purposes of this comparison, the T-bolts may be presumed to resist a separation load proportional to the weight of the entire container. Thus, the static load per T-bolt is:

$$T_{MCC3} = \frac{7{,}544}{30} = 251 \text{ lbs/T-bolt}$$

The MCC-4 container utilizes a total of 50 T-bolts to maintain closure of the outer shell halves. The static load per T-bolt is:

$$T_{MCC4} = \frac{10{,}553}{50} = 211 \text{ lbs/T-bolt}$$

Thus, since the T-bolted closure design is identical for the two containers, it is readily seen that the MCC-4 container presents a less critical case than the MCC-3 for a flat side drop onto the container closure.

# APPENDIX 2-6
# STRUCTURAL CALCULATIONS AND EVALUATIONS RELATING TO THE ASSESSMENT FOR TRANSPORTATION OF VVER 1000 FUEL

# STRUCTURAL CALCULATIONS AND EVALUATIONS RELATING TO THE ASSESSMENT FOR TRANSPORTATION OF VVER 1000 FUEL

## 2-6.1 Introduction

The current MCC packaging configuration is designed to restrain two standard, Westinghouse, square-type fuel assemblies in a nuclear-safe configuration during transportation. This appendix will demonstrate the structural adequacy of a slightly modified MCC package (hereinafter referred to as the MCC-5 package) design to safely transport two hexagonal-type, VVER 1000, fuel assemblies. Figure 2-6-1, below, comparatively illustrates the two fuel assembly configurations.

As seen in Figure 2-6-1, shipment of the VVER 1000 fuel assemblies utilizes an MCC-5 package, which is an MCC-4 package with the following relatively minor modifications to the internals assembly: 1) vee-shaped, rather than flat, fuel assembly bottom grid supports, 2) a somewhat taller top pivot mount, and 3) a different clamping frame assembly detail design. The use of the vee shaped fuel assembly bottom grid supports only changes the internal structure's center of gravity slightly, without other significant structural effects. Further, loss of the vee-shaped bottom grid support structure, located intermittently under each of the VVER 1000 fuel assembly's grid spacers, is inconsequential because the fuel assemblies are still maintained within the confines of the clamping frames. Only the elongated (taller) top pivot mount and revised clamping frame assembly offer structural significance, the details of which are presented in the following sections. These sections specifically demonstrate that the MCC package clamping frame and associated end connections bound the revised design used to transport the VVER 1000 fuel assemblies. Thus, the analyses and drop testing used to demonstrate the MCC package design are applicable and adequately address the MCC-5 configuration.

## 2-6.2 Demonstrating the Adequacy of the Revised Design

Comparative analyses were performed in order to show that the design and testing of the MCC package clamping frame assembly and associated end connections bounds that of the MCC-5 design.

### 2-6.2.1 Physical Comparison of the Two Clamping Frame Designs

Figures 2-6-1 and 2-6-2 provide an illustrative comparison of the two clamping frame configurations. The MCC-5 clamping frame assembly is approximately two inches taller than the standard MCC-3 and MCC-4 clamping frames. Further, the MCC-5 clamping frame assembly provides three pressure pad surfaces to restrain the hexagonally-shaped fuel instead of the normal two pressure pads.

### 2-6.2.2 Material Comparison of the Two Clamping Frame Designs

Both the MCC-4 and MCC-5 clamping frames are identically manufactured of ASTM A240, Type 304, stainless steel with a minimum tensile strength of 75,000 psi and a minimum yield strength of 30,000 psi. Similarly, all other modified MCC-5 component materials are identical to their MCC-4 package counterparts (e.g., top pivot mounts, pressure pads, etc.).

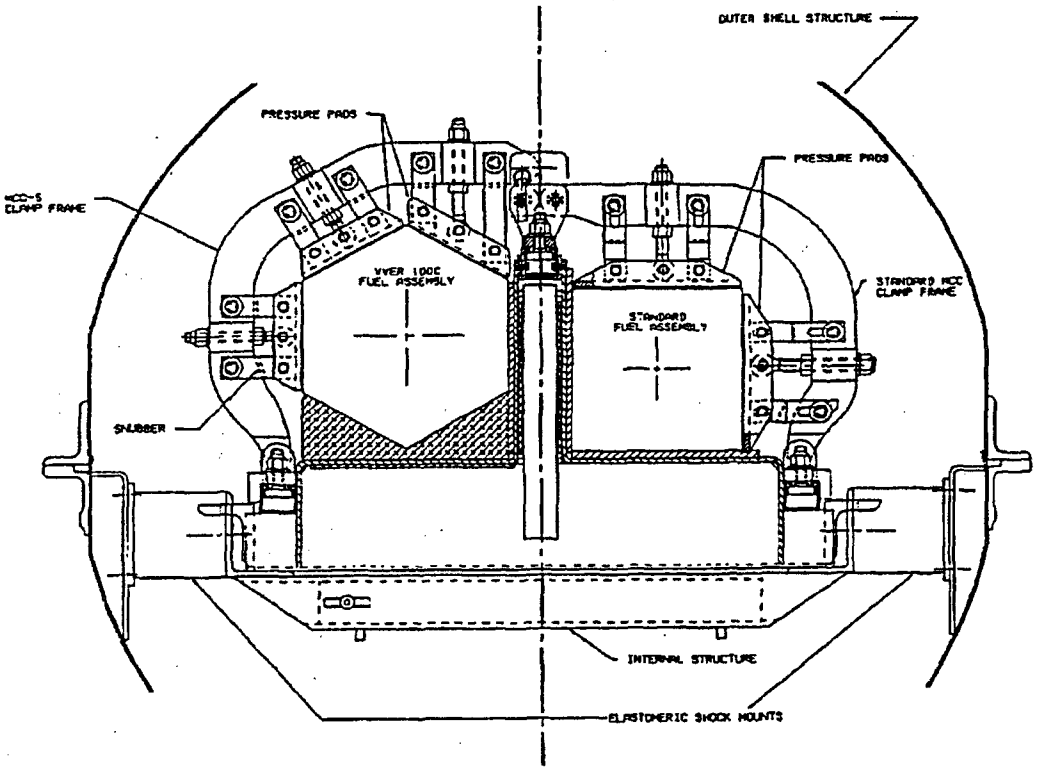


**Figure 2-6-1** **MCC-5 Configuration (Left) Versus the Standard MCC Package Configuration (Right)**

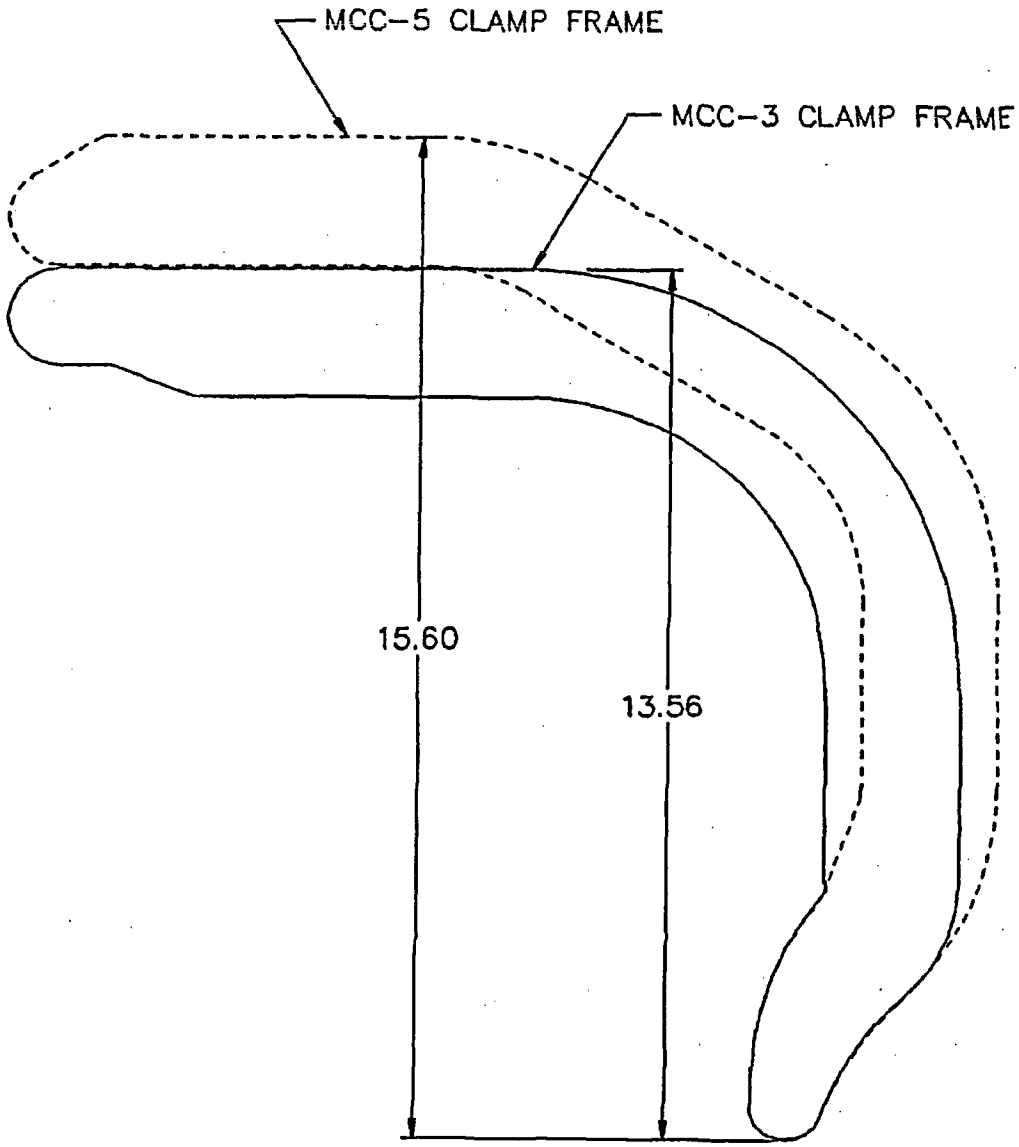


**Figure 2-6-2** **Direct Geometric Overlay Comparison of the MCC-4 Package Clamping Frame onto the MCC-5 Package Clamping Frame**

### 2-6.2.3 Static Loading Comparison of the Two Clamping Frame Designs

Table 2-6-1 contains a comparison of the maximum static (unit) clamping frame loads for both the VVER 1000 fuel assembly configuration and the 15x15 OFA MCC Drop Test. The clamping frame load corresponding to the seven (7) grid, 15x15 fuel assembly is most limiting as compared to other Westinghouse fuel assembly designs.

**Table 2-6-1 Maximum Package Component Weights and Static Clamping Frame Loads**

| Component Parameter | MCC-3 Package (15x15 OFA, Drop Test) | MCC-4 Package (17x17 XL) | MCC-5 Package (VVER-1000) |
|---|---|---|---|
| Gross Package Weight (total, lbs) | 7,544 | 10,553 | 10,553 |
| Outer Shell Structure Weight (total, lbs) | 2,280 | 3,545 | 3,545 |
| Internal Structure Weight (total, lbs) | 1,964 | 3,118 | 3,308 |
| Fuel Assembly Weight (each, lbs) | 1,650 | 1,945 | 1,850 |
| Number of Clamping Frames (minimum) | 7 | 10 | 9 |
| Load per Clamping Frame (lbs) | 235.7 | 194.5 | 205.6 |

Note that the gross package weight includes the weight of the outer shell structure, internal structure, and two fuel assemblies. The outer shell structure weight includes all components from the elastomeric shock mounts outward (e.g., shells, closure structure, shock mounts, etc.). The internal structure weight includes all components inboard of the elastomeric shock mounts (e.g., strongback, absorber plates, clamping frames, etc.), but excluding the two fuel assemblies.

The amount of static (unit) load that each clamping frame will resist is based on the following equation:

$$P_s = \frac{W_{fa}}{N}$$

where:

$P_s$ = static (unit) load per clamping frame, lbs

$W_{fa}$ = fuel assembly weight, lbs

$N$ = number of clamping frames

Then, for the Westinghouse 15x15 OFA fuel assembly, the static (unit) load per clamp, $P_{sM}$, is:

$$P_{sM} = \frac{1,650}{7} = 235.7 \text{ lbs}$$

and, for the VVER 1000 fuel assembly, the static (unit) load per clamp, $P_{sV}$, is:

$$P_{sV} = \frac{1,850}{9} = 205.6 \text{ lbs}$$

Thus, it can be readily seen here and in Table 2-6-1 that for the static (unit) load case, the load per clamp frame is less for the MCC-5 configuration than for the maximum MCC-3 or MCC-4 configurations.

### 2-6.2.4 Dynamic (Free Drop) Loading Comparison of the Two Clamp Frame Designs

Drop testing demonstrated that the standard MCC clamping frame design was satisfactory in retaining the maximum weight fuel assemblies in a controlled configuration. Because of the high ductility of the ASTM A240, Type 304, stainless steel clamping frames, a somewhat larger amount of plastic deformation would have had to occur to exceed the ultimate elongation of the clamping frame material. Further, the presence of the fuel assembly structure precludes catastrophic plastic collapse of the clamping frame structure because clamping frame deformations are self-limiting as the fuel pins crush against each other. Drop testing also demonstrated that structural integrity of the upper and lower pivot mount connections (i.e., the pinned connections at each end of the clamping frames) to the clamping frame were maintained.

A dynamic-equivalent, analytic, free drop loading comparison of the two clamping frame designs, including upper and lower pivot mount connections, shall be made by utilizing the principle of load limiting, plastic bending of the clamping frame structure. The cross-section and basic shape of the MCC-3 and MCC-4 clamping frame designs versus the MCC-5 clamping frame design is essentially identical. Thus, the ability of the clamping frame structures to plastically deform without failure during the free drop events was established. Further, the clamping frame material's high ductility (the ultimate elongation of ASTM A240, Type 304, stainless steel is typically greater than 40%) assures that substantial deformation could occur prior to failure of the clamping frame (note, again, that deformation of the clamping frame is deformation limited due to the presence of a fuel assembly. Therefore, the primary point of potential failure (i.e., failure resulting in the possible release of the fuel assemblies from a controlled configuration) is at the clamping frame end connections, that is, the upper and lower pivot mounts.

A load limiting plastic "hinge" in the clamping frame structure shall be used as a simplifying means of analyzing the limiting forces in the upper and lower pivot mounts during the free drop event. In other words, the maximum forces in the upper and lower pivot mounts for each clamping frame configuration will be determined by idealizing a purely elastic-plastic, stress-strain curve illustrated in Figure 2-6-3. Note that for a rectangular cross-section in bending, the plastic moment is 1 1/2 times the yield strength moment.

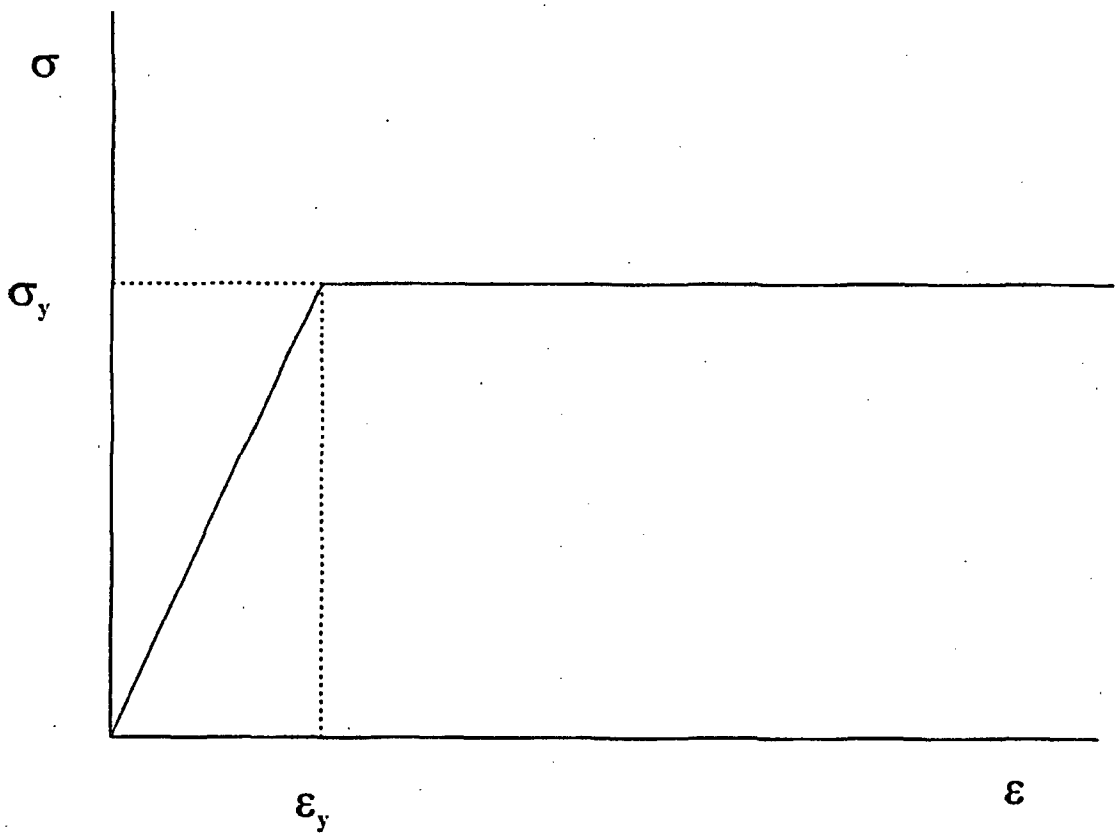


**Figure 2-6-3 Pure Elastic-Plastic, Stress-Strain Curve**

Based on the above methodology, the comparative analyses shall proceed based on the following assumptions:

1. choose the maximum load case standard fuel assembly (heaviest), identified as the Westinghouse "15x15 OFA," to compare to the VVER 1000 fuel assembly for performing the upper and lower pivot mount load comparisons; the Westinghouse 15x15 OFA represented the maximum load case basis (heaviest) used for the MCC drop tests,

2. statically load each clamping frame externally with an arbitrarily chosen unit load of 1,000[1] pounds at various impact angles to simulate an impact load on the clamping frame (i.e., an inverted package side or slapdown impact directly on the clamping frames); Figures 2-6-4 and 2-6-5 illustrate the eight loading cases,

3. translationally pin each end of the clamping frame to simulate the upper and lower pivot mount connections (i.e., zero "X" and "Y" displacements while allowing free rotation),

4. apply appropriate (as established below) counterloads (internal loads) to the clamping frame to simulate the impacting weight of a fuel assembly; counterloads are based on the ratio of the fuel assembly weight to the total internal structure weight; Figures 2-6-7(a) through 2-6-7(h) illustrate the eight loading cases with the applied counterloads at the applicable pressure pad locations,

5. upon determining the stress intensity through the externally loaded cross-section in each clamping frame, ratio the applied static external unit load upward to determine the load to cause a plastic hinge in the clamping frame at the point of external load application; the normalization factor is based on the ratio of the plastic hinge stress to the stress in the clamping frame structure, and includes the number of clamping frames available to restrain a fuel assembly,

6. determine the reaction loads and separation moments at the pivot mounts based on the multiplication factor determined from Step 5, above, and

7. compare the upper and lower pivot mount loadings and moments for each clamping frame configuration (MCC-3 versus MCC-5) to determine the limiting (bounding case).

The preceding assumptions were applied to each clamping frame load case through the use of the ANSYS® finite element analysis program. A computer model of each clamping frame was created and static analyses were performed at multiple angular loading orientations in order to bound the maximum loading case. While it is recognized that large deflection, plasticity analyses will yield more precise results, the use of simple static analyses that utilize the ratio of the defined plastic hinge stress to the maximum calculated stress will sufficiently determine whether the two clamping frame designs react similarly during the hypothetical accident condition drop events.

[1]For the special case of an inverted package orientation (i.e., impacting on the package top) where two clamp frames on both sides of the internal structure strongback are simultaneously loaded, 500 pounds is applied to the clamp frame (since two clamp frames would share the impact loads).

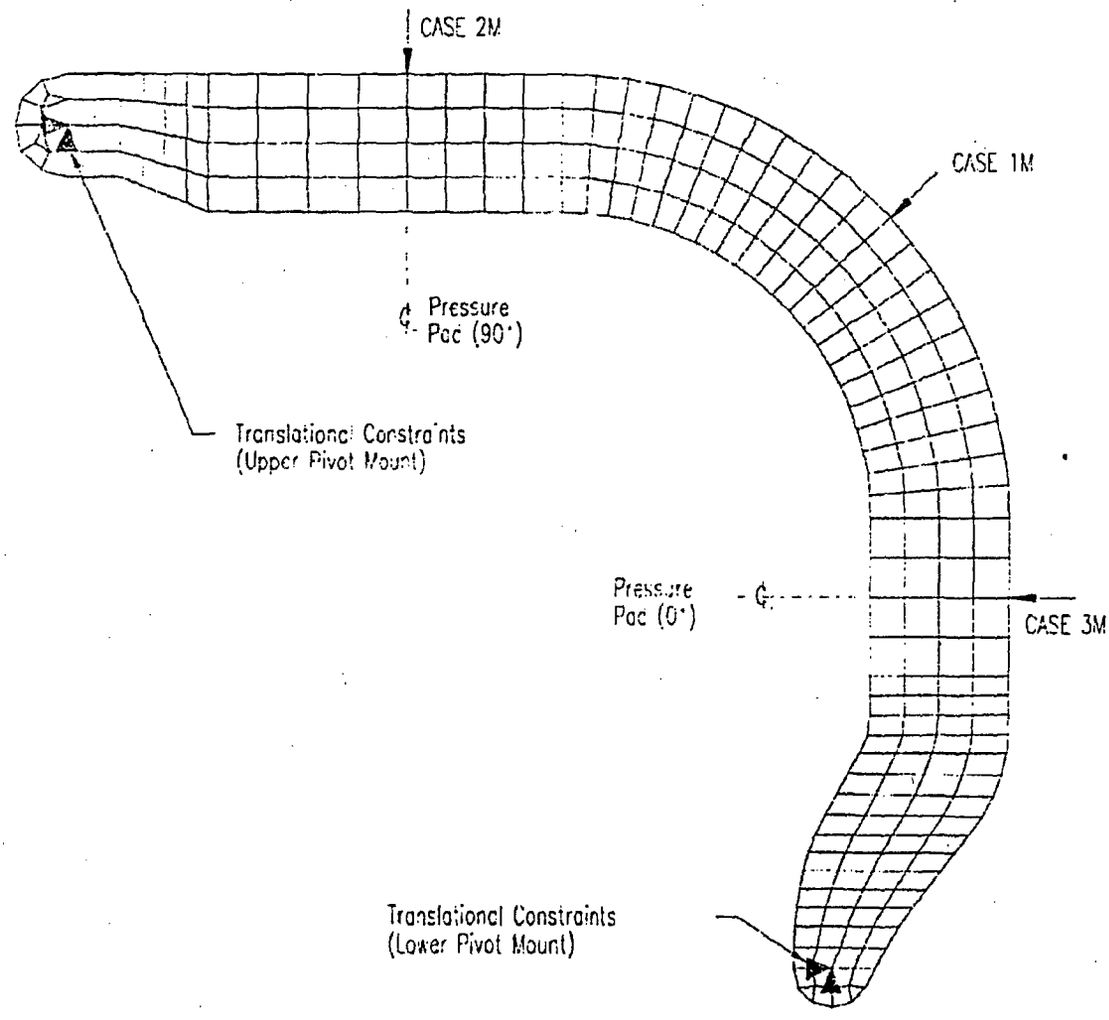


**Figure 2-6-4 Various Load Cases for the MCC-3 Clamping Frame**

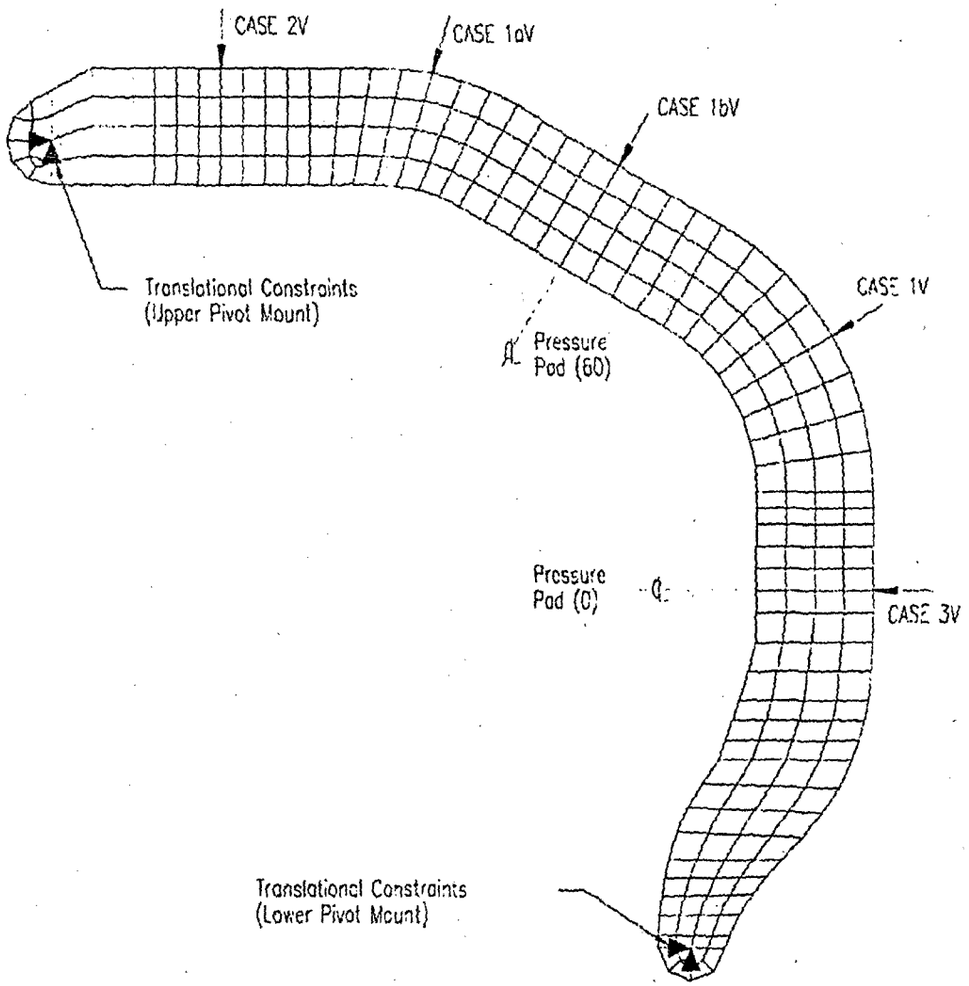


**Figure 2-6-5 Various Load Cases for the MCC-5 Clamping Frame**

Two-dimensional, plane stress (STIF42), static elements were chosen to represent each clamp frame. The basic thickness was specified as 1.25 inches. Details such as the pivot mount interface holes and pressure pad interface holes (notably the same size for both clamp frame designs) were ignored since their effects are localized and considered negligible to the overall system's results. Internal loads are assumed to travel through the pressure pad bolt centers and are applied as point loads.

Figures 2-6-4 and 2-6-5 illustrate the finite element models and various load orientations for the two clamping frames. Each load case was chosen based on the geometric configuration under consideration. Cases 2M and 2V, representing an inverted (upside-down) impact on the package top thereby engaging two clamping frames simultaneously, use an applied external loading of 500 pounds; all other cases utilize 1,000 pounds.

The internal loads (counterloads) simulating the reaction of the fuel assemblies onto the clamping frames is based on the geometry of the clamping frame and the impacting orientation of the package. The location, direction, and magnitude of the internal loads are determined considering:

1. the applied external load of 1,000 pounds (500 pounds for Cases 2M and 2V, i.e., an inverted (upside-down) drop orientation),

2. the fuel assembly and internal structure weights,

3. the angular orientation of the applied external unit load, and

4. the number and orientation of pressure pads carrying the internal load.

The following methodology is used to determine the internal forces (counterloads) for each clamping frame and unit loading orientation

$$\frac{W_t}{F_t} = \frac{W_{fa}}{F_{fa}} \quad \text{or} \quad F_{fa} = F_t\left(\frac{W_{fa}}{W_t}\right)$$

where:

$F_{fa}$ = applied internal force due to the fuel assembly, lbs

$F_t$ = total applied external force, 1,000 lbs

$W_{fa}$ = fuel assembly weight, lbs
= 1,650 lbs for the maximum weight 15x15 OFA fuel assembly
= 1,850 lbs for the maximum weight VVER 1000 fuel assembly

$W_t$ = total internal structure assembly weight = $W_i + 2W_{fa}$, lbs

$W_i$ = internal structure weight, lbs
= 1,964 lbs for the maximum weight MCC-3 internal structure
= 3,308 lbs for the maximum weight MCC-5 internal structure

Further, the resulting counterload transferred through each pressure pad is:

$$F_c = \frac{F_{fa}}{(N_{pp})(f_\theta)}$$

where:

$N_{pp}$ = number of pressure pads carrying the load

$f_\theta$ = factor based on the pressure pad angle

Combining the previous two equations results in a counterload at each pressure pad of:

$$F_c = \left(\frac{F_t}{(N_{pp})(f_\theta)}\right)\left(\frac{W_{fa}}{W_t}\right)$$

Case 1M consists of an angular load, $F_t$, of 1,000 pounds applied externally at a 45° angle to the MCC-3 clamping frame, as shown in Figure 2-6-7(a). The counterload, $F_c$, acting on both pressure pads is:

$$F_c = \left(\frac{1{,}000}{(2)(\sin 45°)}\right)\left(\frac{1{,}650}{1{,}964 + 2(1{,}650)}\right) = 221.6 \text{ lbs}$$

Case 2M consists of an inverted (upside-down) load, $F_t$, of 500 pounds applied externally at the top pressure pad location on the MCC-3 clamping frame, as shown in Figure 2-6-7(e). Further, the internal structure load carried by each clamping frame is one-half the total load. Thus, the counterload, $F_c$, acting on the top pressure pad only is:

$$F_c = \left(\frac{500}{(1)(\sin 90°)}\right)\left(\frac{1{,}650}{(1/2)[1{,}964 + 2(1{,}650)]}\right) = 313.4 \text{ lbs}$$

Case 3M consists of a closure side load, $F_t$, of 1,000 pounds applied externally at the side pressure pad location on the MCC-3 clamping frame, as shown in Figure 2-6-7(g). The counterload, $F_c$, acting on the side pressure pad only is:

$$F_c = \left(\frac{1{,}000}{(1)(\cos 0°)}\right)\left(\frac{1{,}650}{1{,}964 + 2(1{,}650)}\right) = 313.4 \text{ lbs}$$

Case 1V consists of an angular load, $F_t$, of 1,000 pounds applied externally at a 30° angle to the MCC-5 clamping frame, as shown in Figure 2-6-7(b). The counterload, $F_c$, acting on the 0° and 60° pressure pads is:

$$F_c = \left(\frac{1{,}000}{(2)(\cos 30°)}\right)\left(\frac{1{,}850}{3{,}308 + 2(1{,}850)}\right) = 152.4 \text{ lbs}$$

Case 1aV consists of an angular load, $F_t$, of 1,000 pounds applied externally at a 75° angle to the MCC-5 clamping frame, as shown in Figure 2-6-7(c). Conservatively ignore the innermost pressure pad (i.e., the pressure pad closest to the internal structure wall) since any loading normal to the pressure pad surface would tend to bend the pressure pad bolt; the fuel assembly loading is shared unequally between the 60° pressure pad and the internal structure wall. The counterload, $F_c$, acting on the 60° pressure pad only is:

$$F_c = \left(\frac{1{,}000}{(1)(\cos 30°/\cos 15°)}\right)\left(\frac{1{,}850}{3{,}308+2(1{,}850)}\right) = 294.4 \text{ lbs}$$

Case 1bV consists of an angular load, $F_t$, of 1,000 pounds applied externally at a 60° angle to the MCC-5 clamping frame, as shown in Figure 2-6-7(d). The counterload, $F_c$, acting on the 60° pressure pad only is:

$$F_c = \left(\frac{1{,}000}{(1)(\cos 0°)}\right)\left(\frac{1{,}850}{3{,}308+2(1{,}850)}\right) = 264.0 \text{ lbs}$$

Case 2V consists of an inverted (upside-down) load, $F_t$, of 500 pounds applied externally at the top pressure pad location on the MCC-5 clamping frame, as shown in Figure 2-6-7(f). Conservatively ignore the innermost pressure pad (i.e., the pressure pad closest to the internal structure wall) since any loading normal to the pressure pad surface would tend to bend the pressure pad bolt; the fuel assembly loading is shared unequally between the 60° pressure pad and the internal structure wall. Further, the internal structure load carried by each clamping frame is one-half the total load. Thus, the counterload, $F_c$, acting on the 60° pressure pad only is:

$$F_c = \left(\frac{500}{(1)(\cos 30°)}\right)\left(\frac{1{,}850}{(1/2)[3{,}308+2(1{,}850)]}\right) = 304.8 \text{ lbs}$$

Case 3V consists of a closure side load, $F_t$, of 1,000 pounds applied externally at the side pressure pad location on the MCC-5 clamping frame, as shown in Figure 2-6-7(h). The counterload, $F_c$, acting on the side pressure pad only is:

$$F_c = \left(\frac{1{,}000}{(1)(\cos 0°)}\right)\left(\frac{1{,}850}{3{,}308+2(1{,}850)}\right) = 264.0 \text{ lbs}$$

Figures 2-6-7(a) through 7(h) illustrate the applied internal forces (counterloads) and external (unit) forces applied to the finite element models for each of the eight loading cases. The counterloads applied for each loading case are further presented in Table 2-6-2.

| Table 2-6-2 Applied Internal Forces (Counterloads) for Each Load Case | | |
|---|---|---|
| Loading Case | Angle of Counterload(s) (from horizontal) | Counterload(s) Applied to Model[1] |
| 1M | 0°/90° | 221.6/221.6 |
| 1V | 0°/60° | 152.5/152.5 |
| 1aV | 60° | 294.4 |
| 1bV | 60° | 264.0 |
| 2M | 90° | 313.4 |
| 2V | 60° | 304.8 |
| 3M | 0° | 313.4 |
| 3V | 0° | 264.0 |

Note:
1. Counterload(s) at the pressure pad bolt location(s), normal to the pressure pad surface.

The maximum stress intensity for each of the clamping frame designs was obtained from the analytic results, and are presented in Table 2-6-3. Figures 2-6-8(a) through 2-6-8(h) provide the stress intensity plots for the each load case model.

Also included in Figures 2-6-7(a) through 2-6-7(h), along with the applied internal and external forces, are the "X" and "Y" direction reaction forces (X is horizontal, Y is vertical) at each translational constraint at the upper and lower pivot mount locations for each load case model. These resulting reaction forces, taken directly from the finite element analysis output, and the vector sum of the reaction forces at both the upper and lower pivot mounts are presented in Tables 2-6-4 and 2-6-5, respectively.

| Table 2-6-3 Maximum Unit Load Stress Intensity for Each Load Case | | |
|---|---|---|
| Loading Case | Angle of Unit External Load | Maximum Unit Load Stress Intensity (psi)[1] |
| 1M | 45° | 1,780 |
| 1V | 30° | 1,611 |
| 1aV | 75° | 2,872 |
| 1bV | 60° | 2,044 |
| 2M | 90° | 903 |
| 2V | 90° | 1,271 |
| 3M | 0° | 2,181 |
| 3V | 0° | 2,358 |

Note:
1. At the point of external unit (1,000 or 500 pound) load application.

| Table 2-6-4 Upper Pivot Mount Reaction Forces for a Unit External Load | | | | |
|---|---|---|---|---|
| Loading Case | Angle of Unit External Load | $F_{ux}$ (lbs) | $F_{uy}$ (lbs) | $F_u$ (lbs) |
| 1M | 45° | 514 | -88 | 521 |
| 1V | 30° | 506 | -105 | 517 |
| 1aV | 75° | 139 | 366 | 392 |
| 1bV | 60° | 335 | 103 | 350 |
| 2M | 90° | 8 | 95 | 95 |
| 2V | 90° | -127 | 314 | 339 |
| 3M | 0° | 320 | -91 | 333 |
| 3V | 0° | 408 | -126 | 427 |

| Table 2-6-5 Lower Pivot Mount Reaction Forces for a Unit External Load | | | | |
|---|---|---|---|---|
| Loading Case | Angle of Unit External Load | $F_{lx}$ (lbs) | $F_{ly}$ (lbs) | $F_l$ (lbs) |
| 1M | 45° | -29 | 573 | 574 |
| 1V | 30° | 132 | 473 | 491 |
| 1aV | 75° | -28 | 345 | 346 |
| 1bV | 60° | 33 | 535 | 536 |
| 2M | 90° | -8 | 92 | 92 |
| 2V | 90° | -24 | -78 | 82 |
| 3M | 0° | 367 | 91 | 378 |
| 3V | 0° | 328 | 126 | 351 |

Using the component (X-direction and Y-direction) forces, a separation moment may be calculated in order to quantify and compare the torque applied (i.e., resulting from the unit external loading) to the lower pivot mount. The lower pivot mount was selected for comparison of the separation moments because it was observed during package drop testing to be most limiting as compared to the upper pivot mount. Further, failure of the top pivot mount without failure of the top pivot mount connections to the clamping frame and failure of the bottom pivot mount is of no consequence because the fuel assembly will still be restrained. The possibility of pin failure and pivot mount failure are determined by simply considering the vector sum of the reaction forces at each location.

From the X-direction and Y-direction reaction forces at the lower pivot mount pinned connection, the moment at the upper left corner of the Unistrut (point "A" in Figure 2-6-6) can be determined. Selection of the location of point "A" is conservative for comparison of results; lowering the center of rotation to the Unistrut bottom will result in a greater difference between the magnitude of the separation moments.

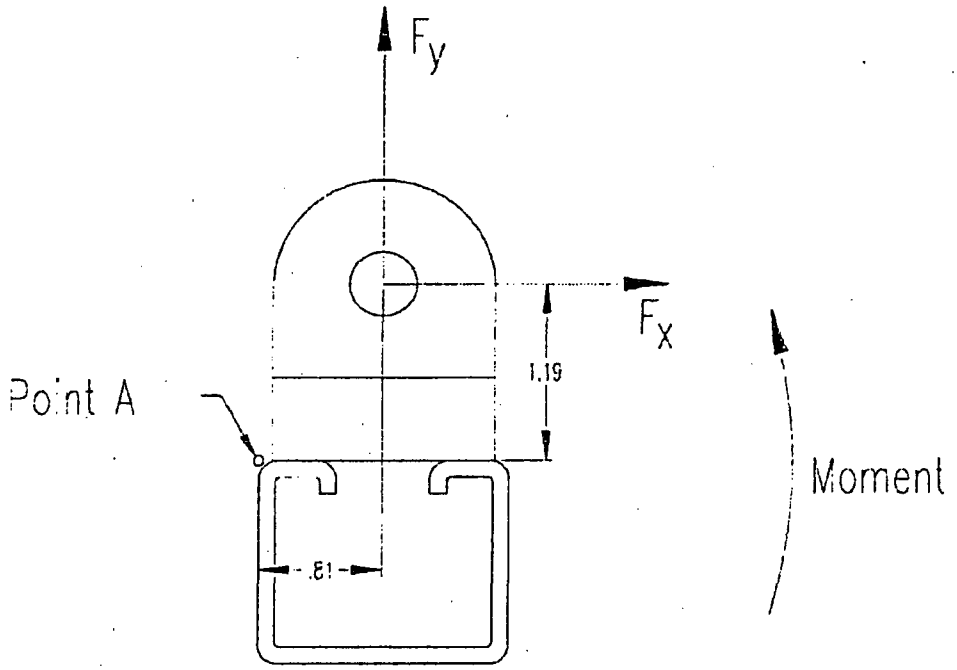


**Figure 2-6-6 Lower Pivot Mount Separation Moment Configuration**

With reference to Figure 2-6-6, summation of moments about point "A" results in the following relationship:

$$\Sigma M_A = -(1.19)F_x + (0.81)F_y$$

Table 2-6-6 provides the vector sums of the forces at the lower pivot mount, and moment summaries for an external unit load applied to each clamping frame loading case.

The following analyses will determine the normalization factor by which the upper and lower pivot mount reaction forces and the lower pivot mount separation moment will be multiplied in order to determine the respective values when a plastic hinge forms in the clamping frame structure.

| Table 2-6-6 Lower Pivot Mount Separation Moment for a Unit External Load | | | | |
|---|---|---|---|---|
| Loading Case | Angle of Unit External Load | $F_{lx}$ (lbs) | $F_{ly}$ (lbs) | $M_l$ (lbs) |
| 1M | 45° | -29 | 573 | 499 |
| 1V | 30° | 132 | 473 | 226 |
| 1aV | 75° | -28 | 345 | 313 |
| 1bV | 60° | 33 | 535 | 394 |
| 2M | 90° | -8 | 92 | 89 |
| 2V | 90° | -24 | -78 | -35 |
| 3M | 0° | 367 | 91 | 363 |
| 3V | 0° | 328 | 126 | -288 |

The analyses assume that for any drop orientation, the clamping frames will deform and form a plastic hinge. This assumption is justified by results observed during drop testing of the MCC package. Testing demonstrated that the clamping frame pivot mount connections did not fail and plastic deformation occurred in the clamping frames. Further inspection of the stress intensity in the finite element analysis model output plots (Figures 2-6-8(a) through 2-6-8(h)) show a generally uniform bending condition across the depth of the clamping frame cross-section at the point of external load application. Thus, the assumption of developing a plastic hinge at the point of loading is validated. Secondary plastic hinges are of no consequence because of the limited deformation which can occur due to the presence of the constrained fuel assemblies. The simplifying assumption is that a plastic hinge will form in the clamping frame structure resulting in the maximum forces in the upper and lower pivot mounts.

For a rectangular cross-section in bending, the plastic moment, $M_p$, is simply 1 ½ times the yield moment, $M_y$. Therefore, the plastic strength, $S_p$, is 1 ½ times the yield strength of 30,000 psi, or:

$$S_p = (1.5)S_y = (1.5)(30{,}000\ \text{psi}) = 45{,}000\ \text{psi}$$

To effectively compare the resulting forces at each pivot mount, as well as the moment at the lower pivot mount, the previously calculated values for each case must be appropriately normalized to the plastic hinge stress for each configuration. The normalization factor for each clamping frame design is dependent on the total weight of the internal structure, $W_t$, the weight of each fuel assembly, $W_{fa}$, the magnitude of the external unit load, $F_{unit}$, and the number of clamping frames, N, for each particular design.

The normalization factor for the drop tested MCC-3 and MCC-4 clamping frame design is based on a external unit load of 1,000 pounds, two fuel assemblies weighing 1,650 pounds each, an internal structure weight of 1,964 pounds, and 7 clamping frames. Thus, the normalization factor to be applied to Load Cases 1M, 2M and 3M is:

$$\beta_M = \frac{W_i + 2W_{fa}}{7F_{unit}} = \frac{1{,}964 + 2(1{,}650)}{7(1{,}000)} = 0.7520$$

The normalization factor for the MCC-5 clamping frame design is based on a unit load of 1,000 pounds, two VVER 1000 fuel assemblies weighing 1,850 pounds each, an internal structure weight of 3,308 pounds, and 9 clamping frames. Thus, the normalization factor to be applied to Load Cases 1V, 1aV, 1bV, 2V and 3V is:

$$\beta_V = \frac{W_i + 2W_{fa}}{9F_{unit}} = \frac{3{,}308 + 2(1{,}850)}{9(1{,}000)} = 0.7787$$

Finally, normalizing the external unit load stress intensity, $S_u$, to the plastic bending stress, $S_p$, of 45,000 psi, the normalized reaction force at the upper and lower pivot mounts is:

$$\overline{F}_{u,l} = F_{u,l}\left(\frac{S_p}{\beta_{M,V}S_u}\right)$$

Similarly, the normalized separation moment occurring at the lower pivot mount is:

$$\overline{M}_l = M_l\left(\frac{S_p}{\beta_{B,V}S_u}\right)$$

As an example, the normalized reaction force and separation moment at the lower pivot mount for Case 1M are:

$$\overline{F}_l = 574\left(\frac{45{,}000}{(0.7520)(1{,}780)}\right) = 19{,}297 \text{ lbs}$$

and,

$$\overline{M}_l = 499\left(\frac{45{,}000}{(0.7520)(1{,}780)}\right) = 16{,}775 \text{ in} - \text{lbs}$$

Tables 2-6-7 and 2-6-8 present the upper and lower pivot mount reaction force comparisons using the above normalized relationships. Table 2-6-9 presents the lower pivot mount separation moment, also using the above normalized relationships.

| Table 2-6-7 Upper Pivot Mount Normalized Reaction Forces Upon Formation of a Plastic Hinge in the Clamping Frame Structure | | | |
|---|---|---|---|
| Loading Case | Angle of Unit External Load | $F_u$ (lbs) | $\overline{F}_u$ (lbs) |
| 1M | 45° | 521 | 17,515 |
| 1V | 30° | 517 | 18,545 |
| 1aV | 75° | 392 | 7,888 |
| 1bV | 60° | 350 | 9,895 |
| 2M | 90° | 95 | 6,296 |
| 2V | 90° | 339 | 15,413 |
| 3M | 0° | 333 | 9,137 |
| 3V | 0° | 427 | 10,465 |

| Table 2-6-8 Lower Pivot Mount Normalized Reaction Forces Upon Formation of a Plastic Hinge in the Clamping Frame Structure | | | |
|---|---|---|---|
| Loading Case | Angle of Unit External Load | $F_l$ (lbs) | $\overline{F}_l$ (lbs) |
| 1M | 45° | 574 | 19,287 |
| 1V | 30° | 491 | 17,613 |
| 1aV | 75° | 346 | 6,962 |
| 1bV | 60° | 536 | 15,154 |
| 2M | 90° | 92 | 6,097 |
| 2V | 90° | 82 | 3,728 |
| 3M | 0° | 378 | 10,371 |
| 3V | 0° | 351 | 8,602 |

| Table 2-6-9 Lower Pivot Mount Normalized Separation Moments Upon Formation of a Plastic Hinge in the Clamping Frame Structure | | | |
|---|---|---|---|
| Loading Case | Angle of Unit External Load | $M_l$ (lbs) | $\bar{M}_l$ (lbs) |
| 1M | 45° | 499 | 16,775 |
| 1V | 30° | 226 | 8,107 |
| 1aV | 75° | 313 | 6,298 |
| 1bV | 60° | 394 | 11,139 |
| 2M | 90° | 84 | 5,567 |
| 2V | 90° | -35 | -1,591 |
| 3M | 0° | 363 | 9,960 |
| 3V | 0° | -288 | -7,058 |

## 2-6.3 Summary of the Results

Table 2-6-10 summarizes the normalized upper and lower pivot mount reaction forces and lower pivot mount separation moments. It is readily seen from the preceding analyses that the MCC design and, hence, the MCC full scale testing program encompass and bound the modified MCC-4 package design for transportation of the VVER 1000 fuel assemblies. Furthermore, additional margin exists due to reduced MCC-5 clamping frame load as compared to that indicative of the MCC drop test.

| Table 2-6-10 Maximum Pivot Mount Reaction Forces and Moments Summary | | | | |
|---|---|---|---|---|
| Clamping Frame Design | Maximum Upper or Lower Pivot Mount Reaction Force (lbs) | | Maximum Lower Pivot Mount Separation Moment (in-lbs) | |
| | Load Case | Force | Load Case | Moment |
| MCC | $1M_l$ | 19,297 | $1M_l$ | 16,775 |
| VVER 1000 | $1V_u$ | 18,545 | $1bV_l$ | 11,139 |

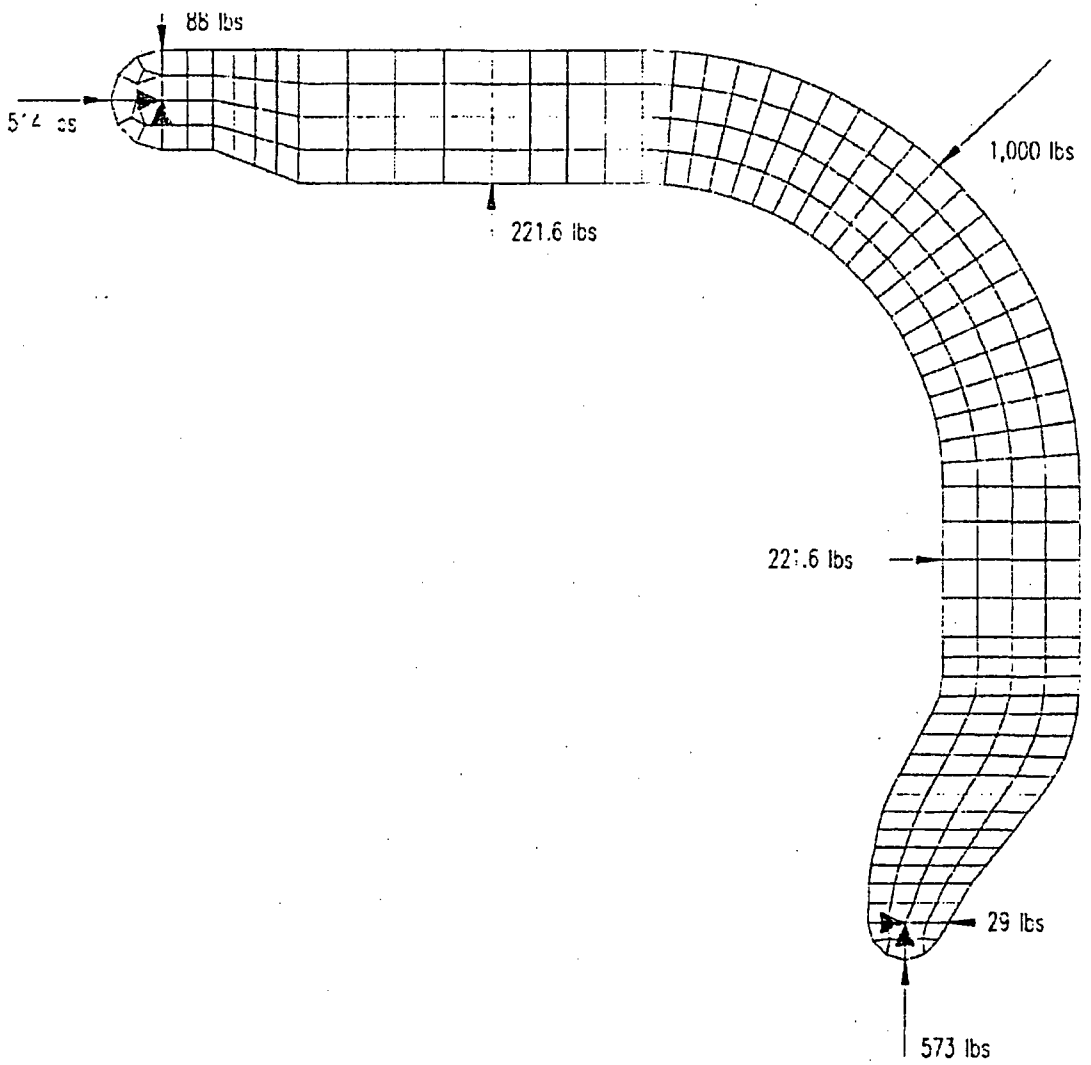


**Figure 2-6-7(a) Applied Loads and Reaction Forces for Case 1M**

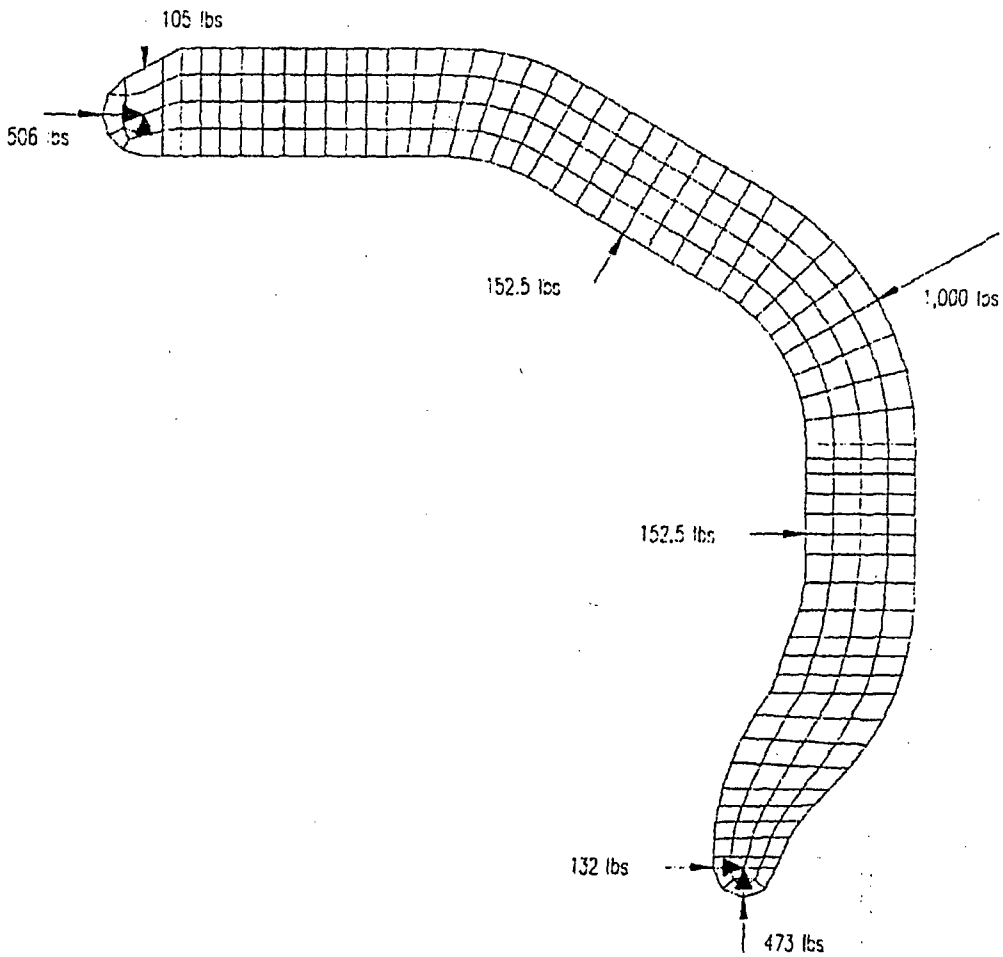


**Figure 2-6-7(b) Applied Loads and Reaction Forces for Case IV**

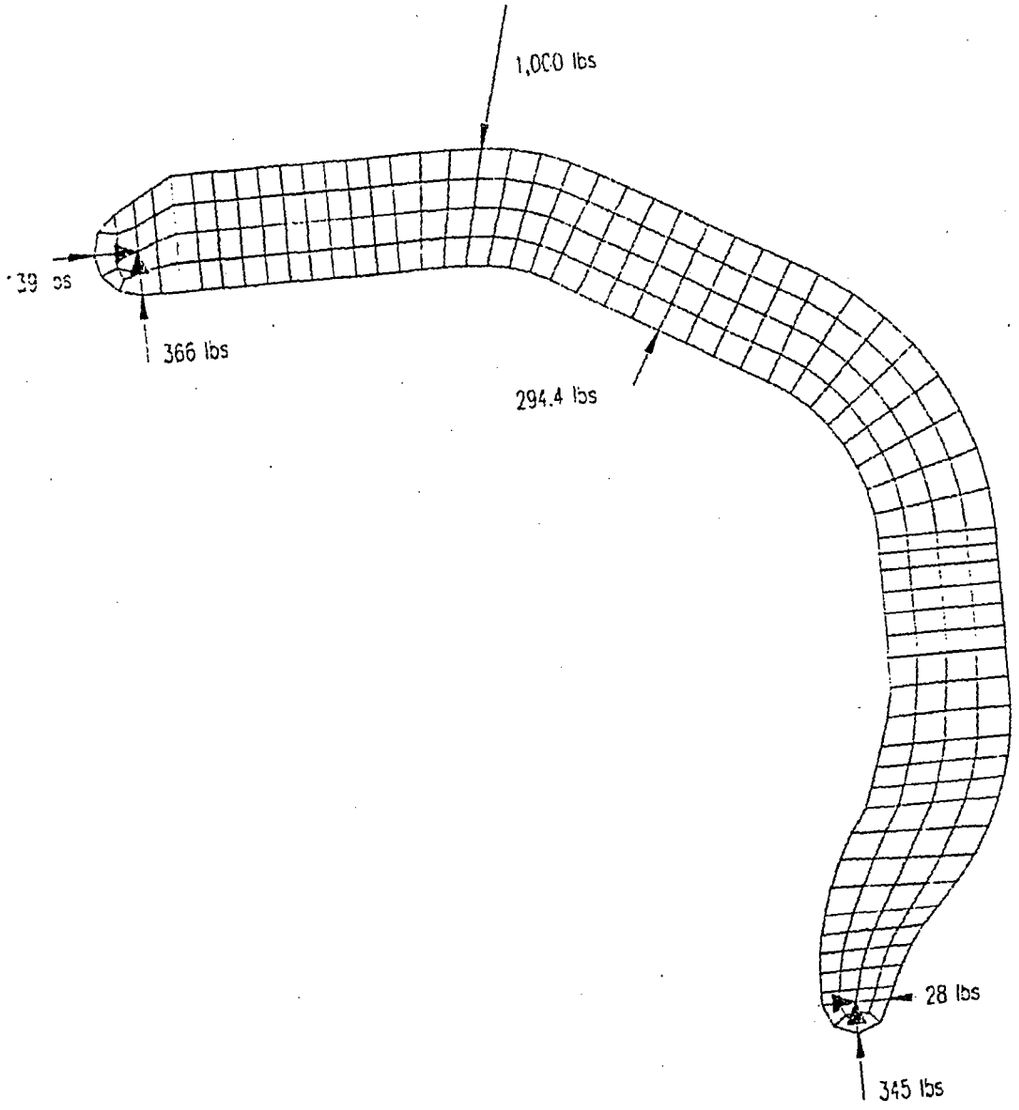


**Figure 2-6-7(c) Applied Loads and Reaction Forces for Case 1aV**

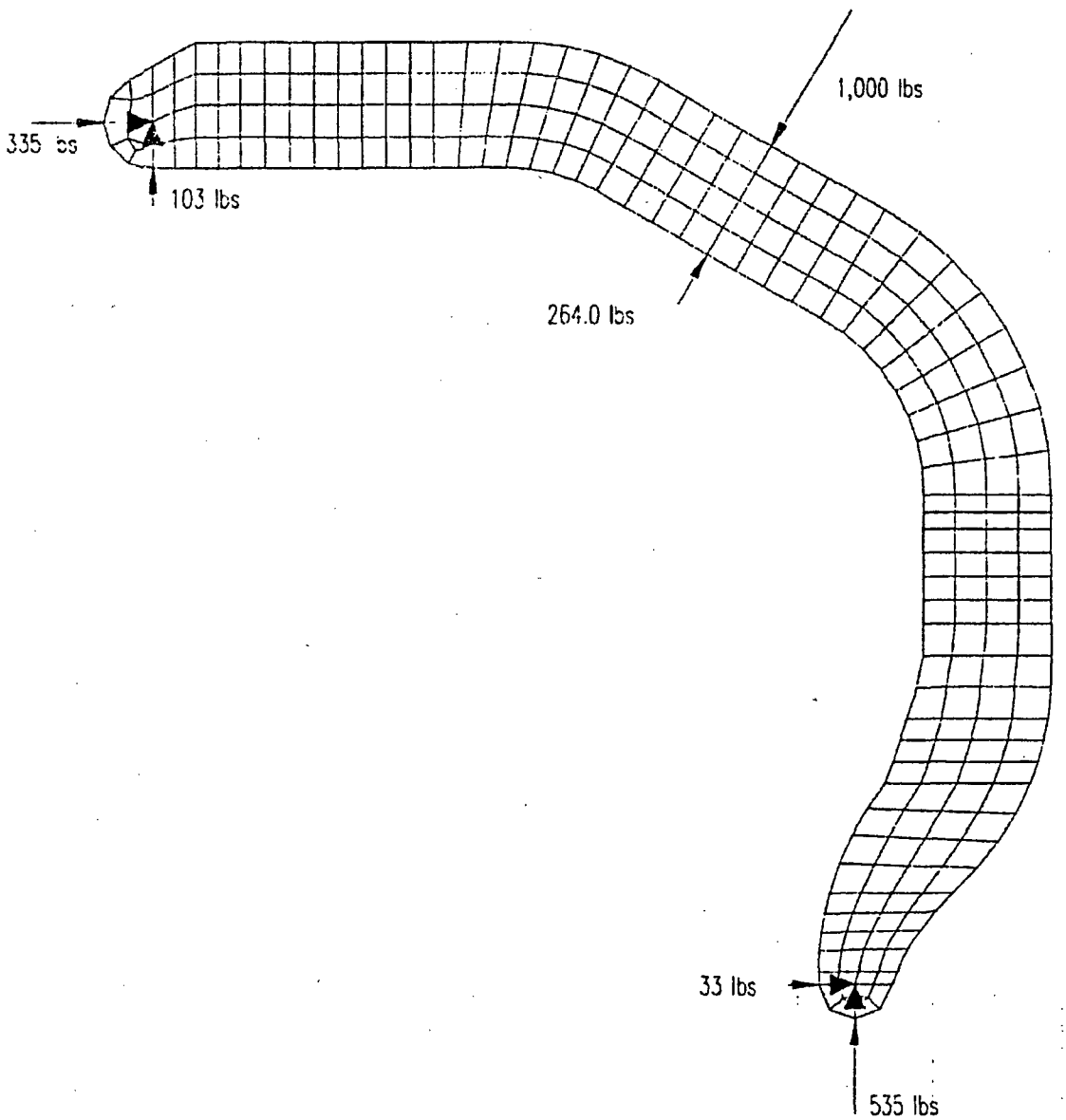


**Figure 2-6-7(d) Applied Loads and Reaction Forces for Case 1bV**

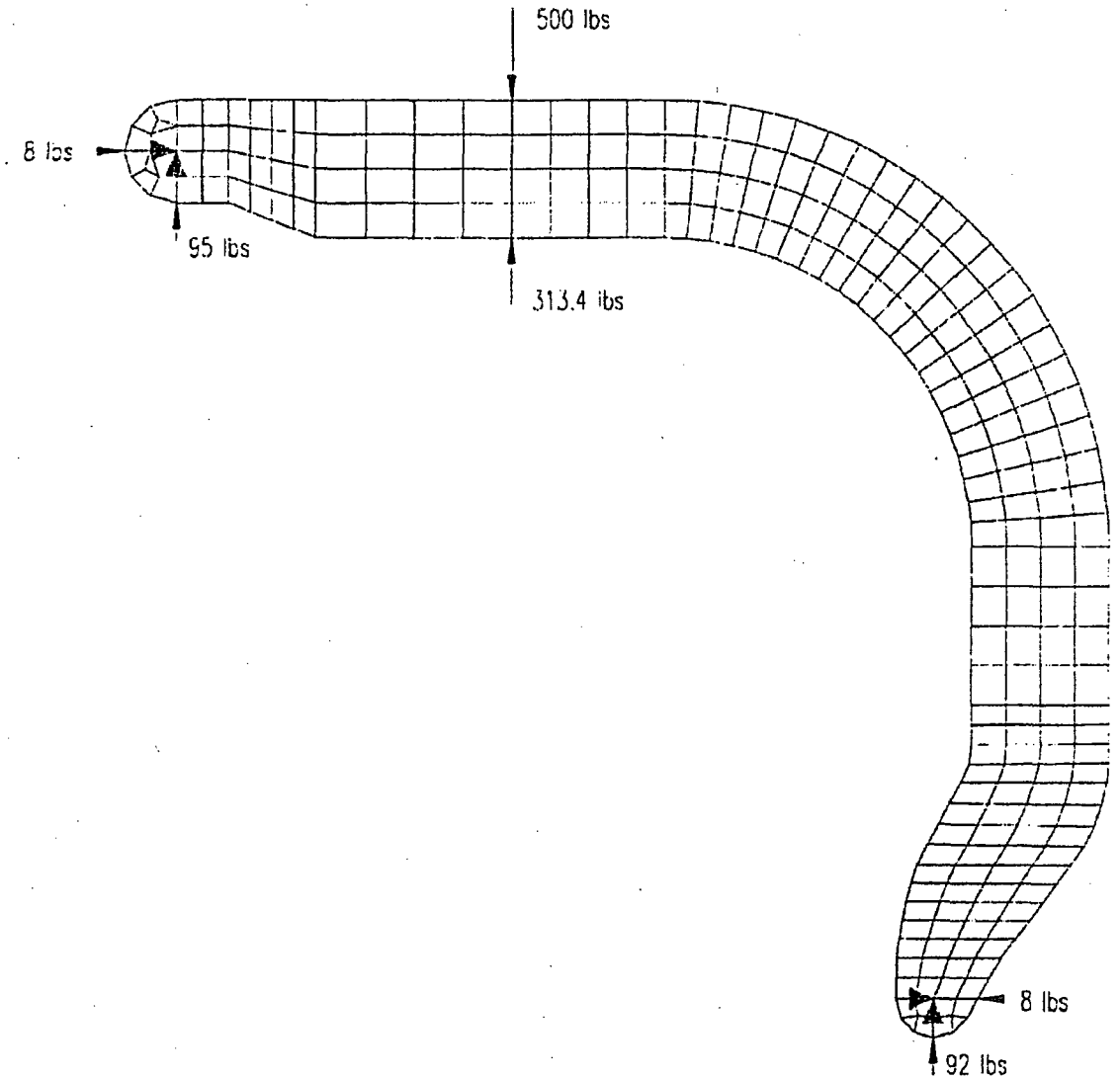


**Figure 2-6-7(e) Applied Loads and Reaction Forces for Case 2M**

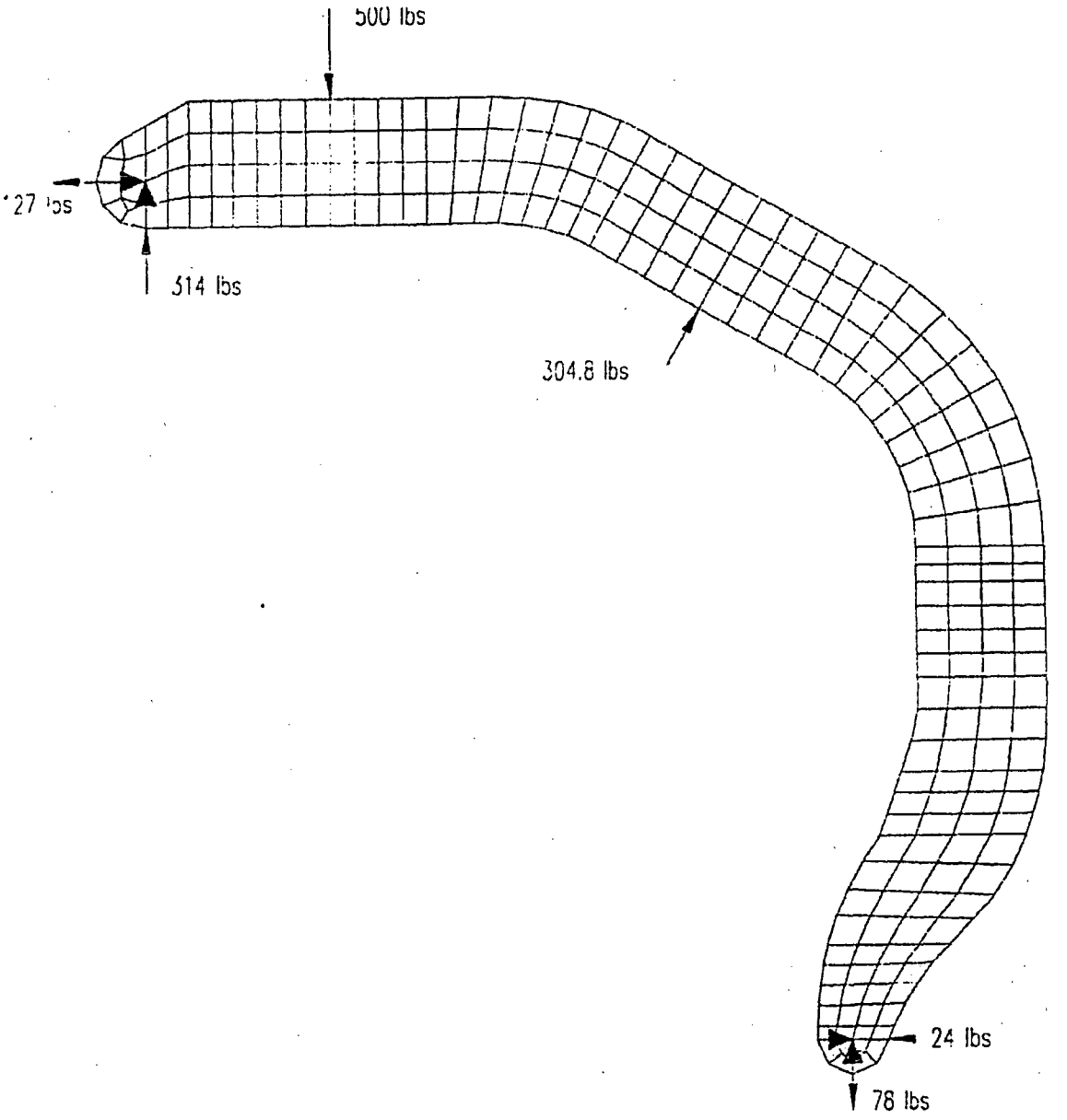


**Figure 2-6-7(f) Applied Loads and Reaction Forces for Case 2V**

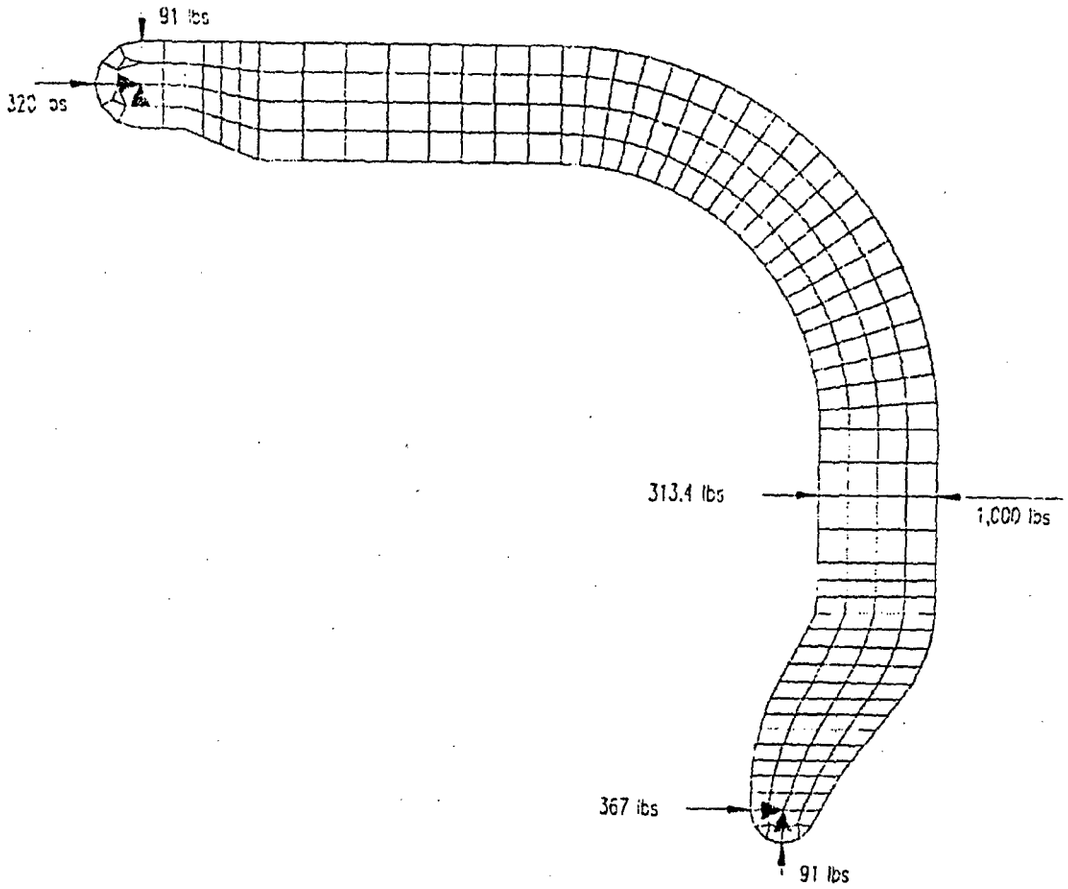


**Figure 2-6-7(g) Applied Loads and Reaction Forces for Case 3M**

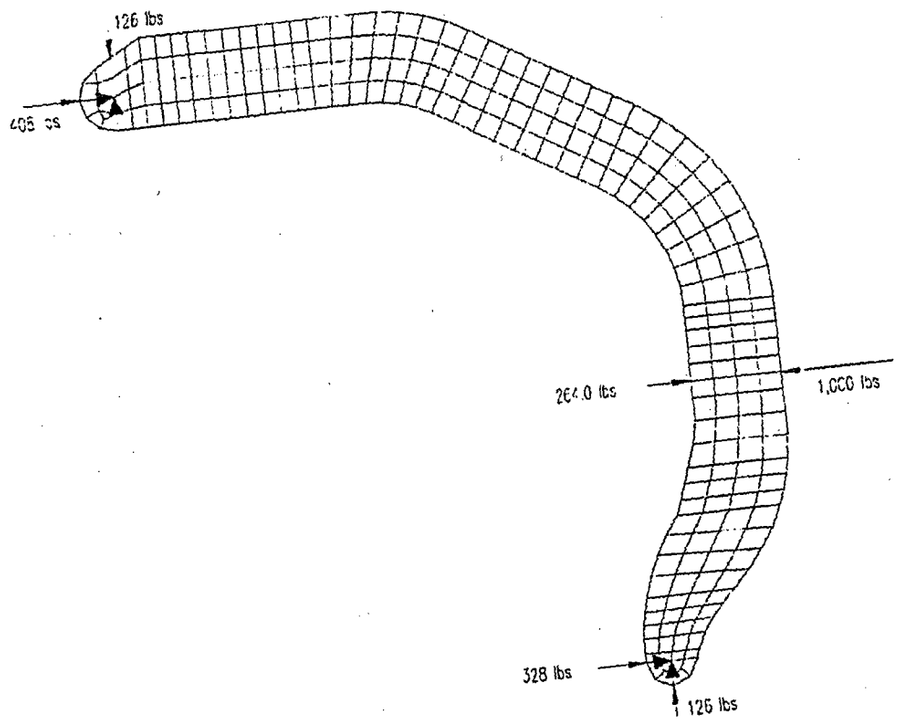


**Figure 2-6-7(h) Applied Loads and Reaction Forces for Case 3V**

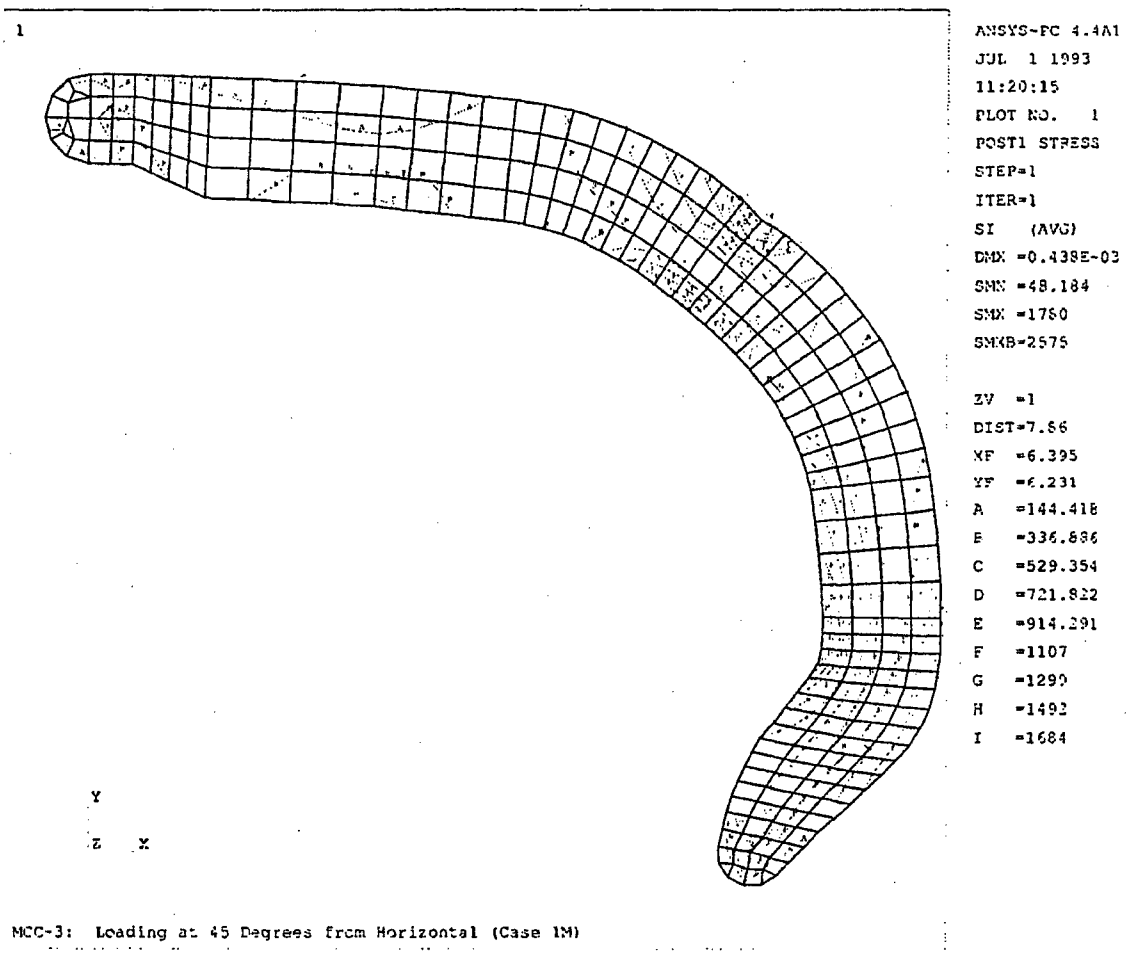


**Figure 2-6-8(a) Stress Intensity Plot for Case 1M**

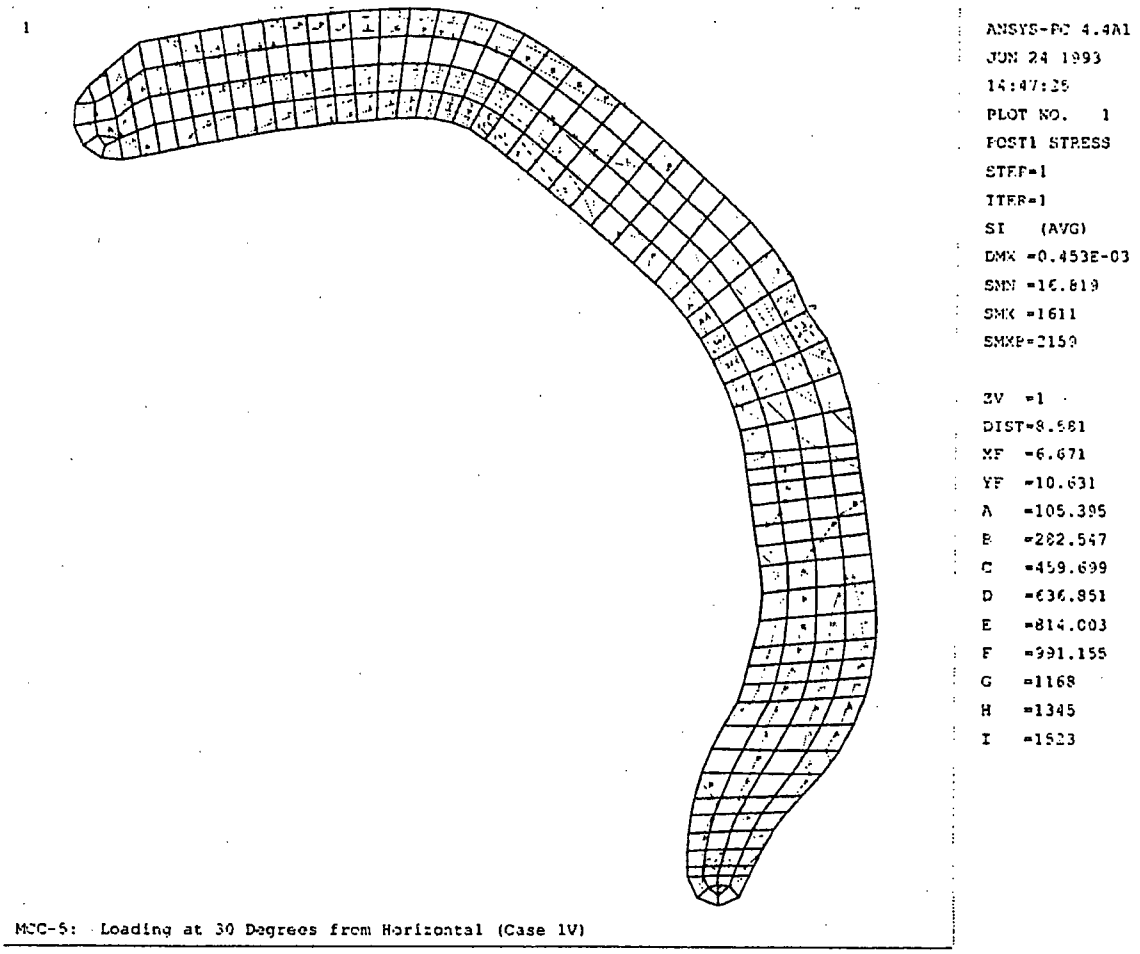


**Figure 2-6-8(b) Stress Intensity Plot for Case 1V**

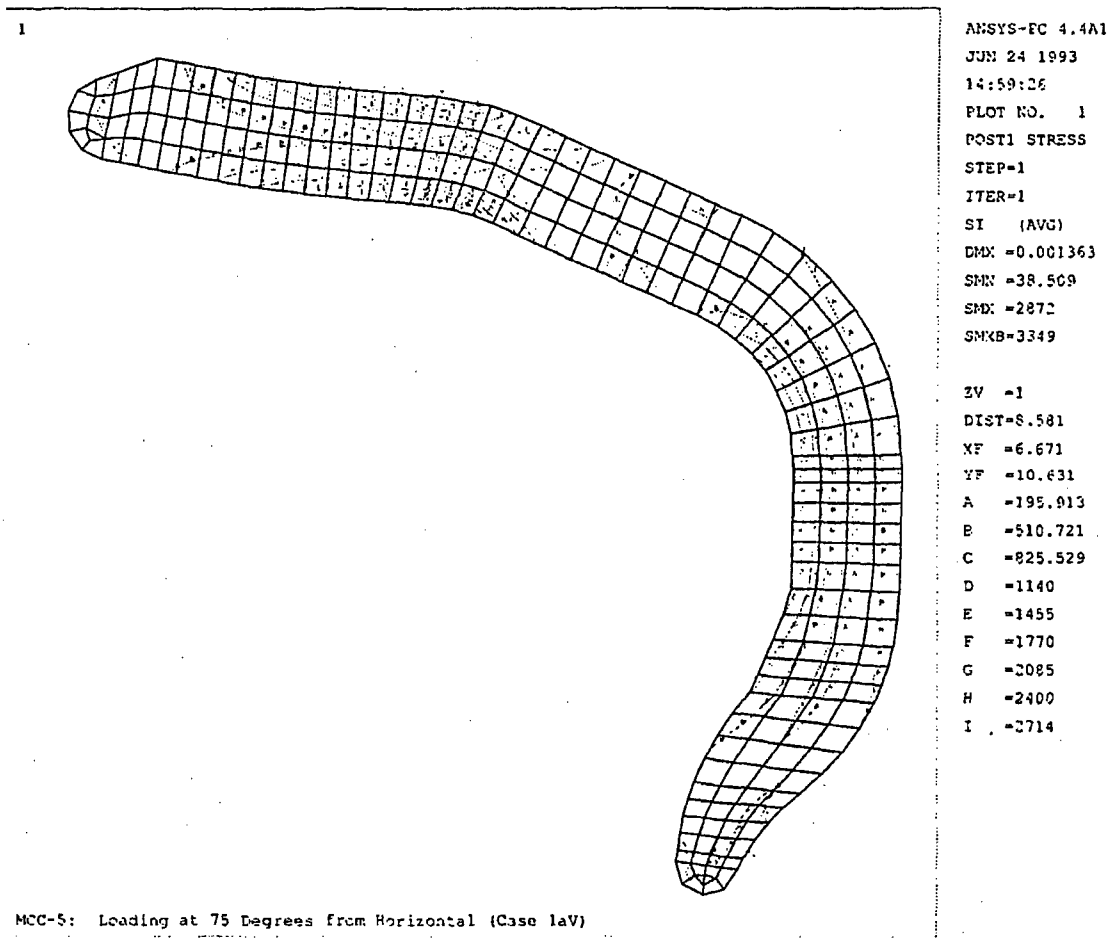


**Figure 2-6-8(c) Stress Intensity Plot for Case 1aV**

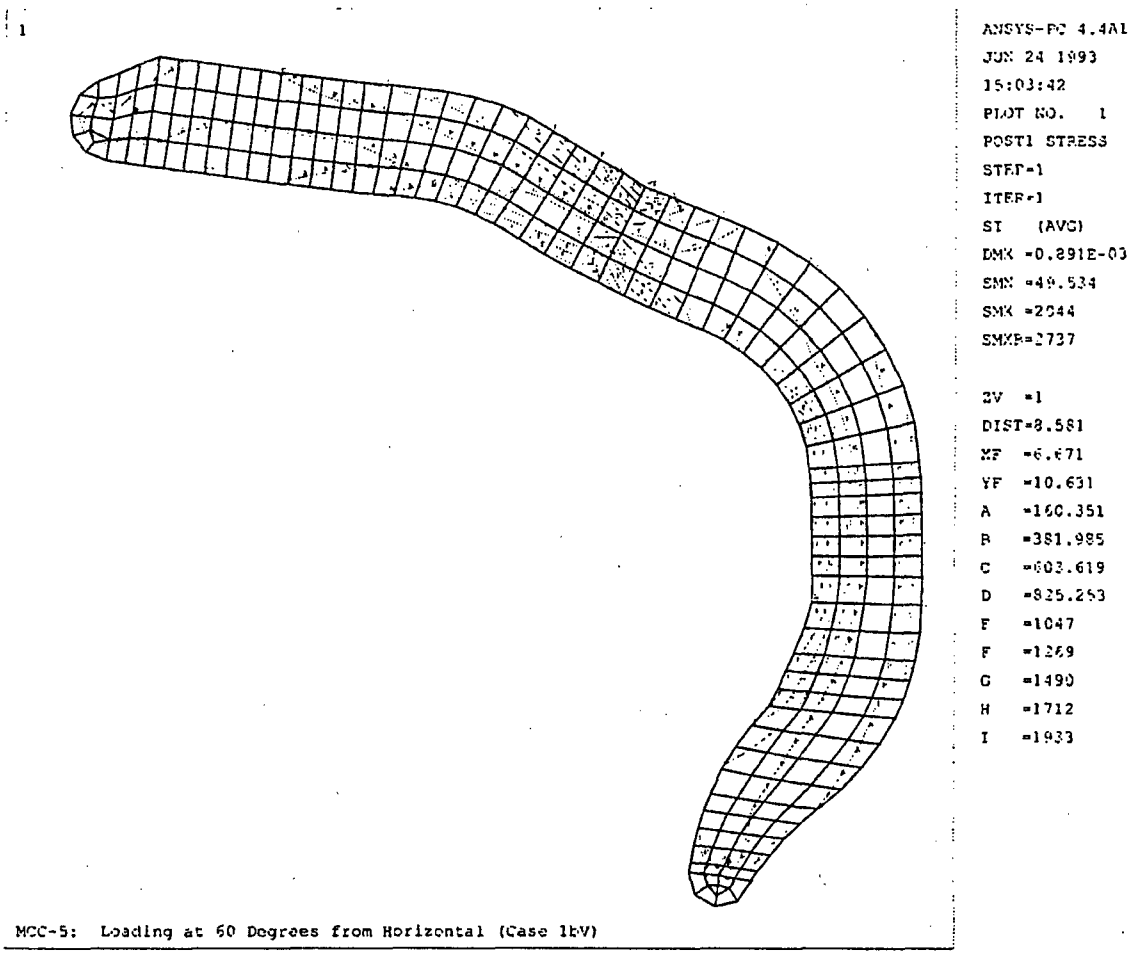


**Figure 2-6-8(d) Stress Intensity Plot for Case 1bV**

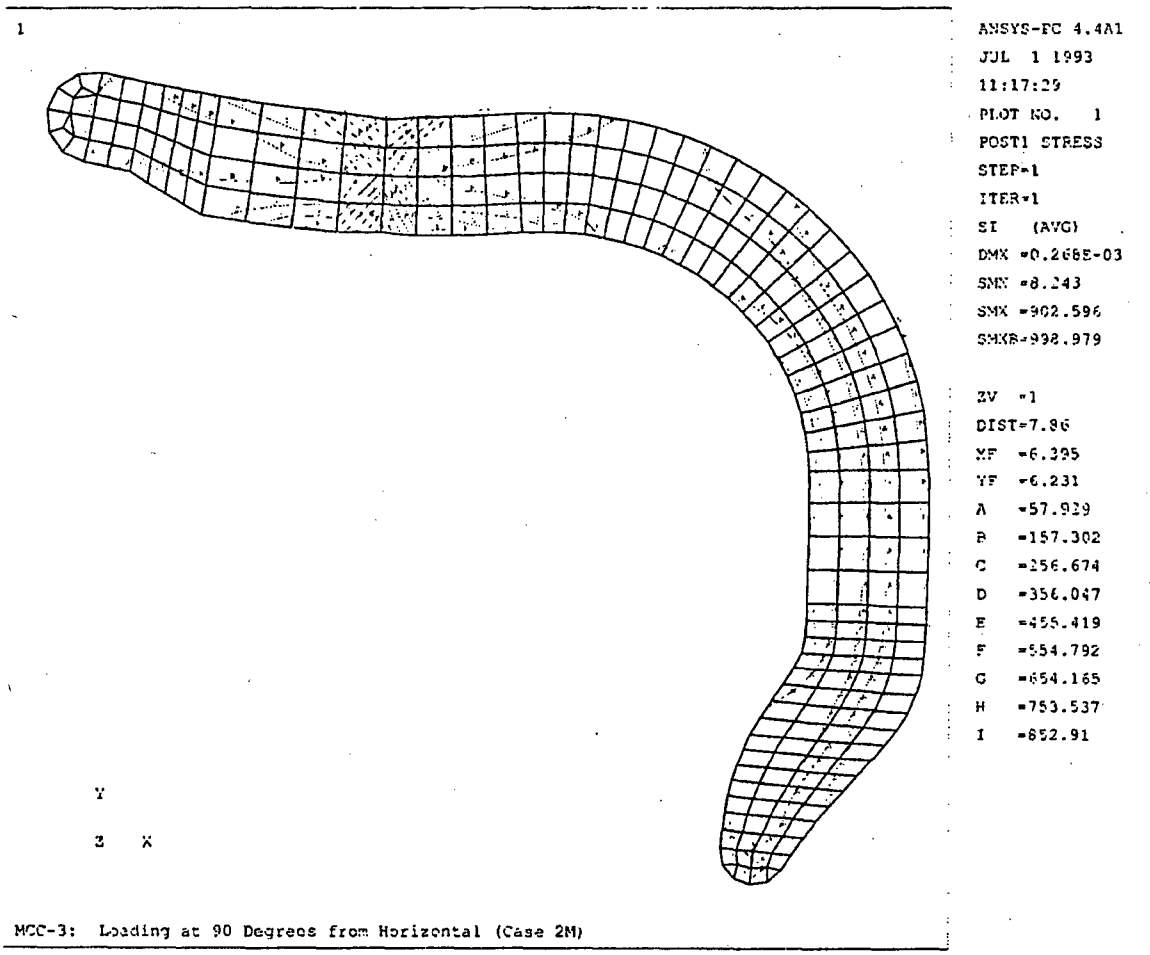


**Figure 2-6-8(e) Stress Intensity Plot for Case 2M**

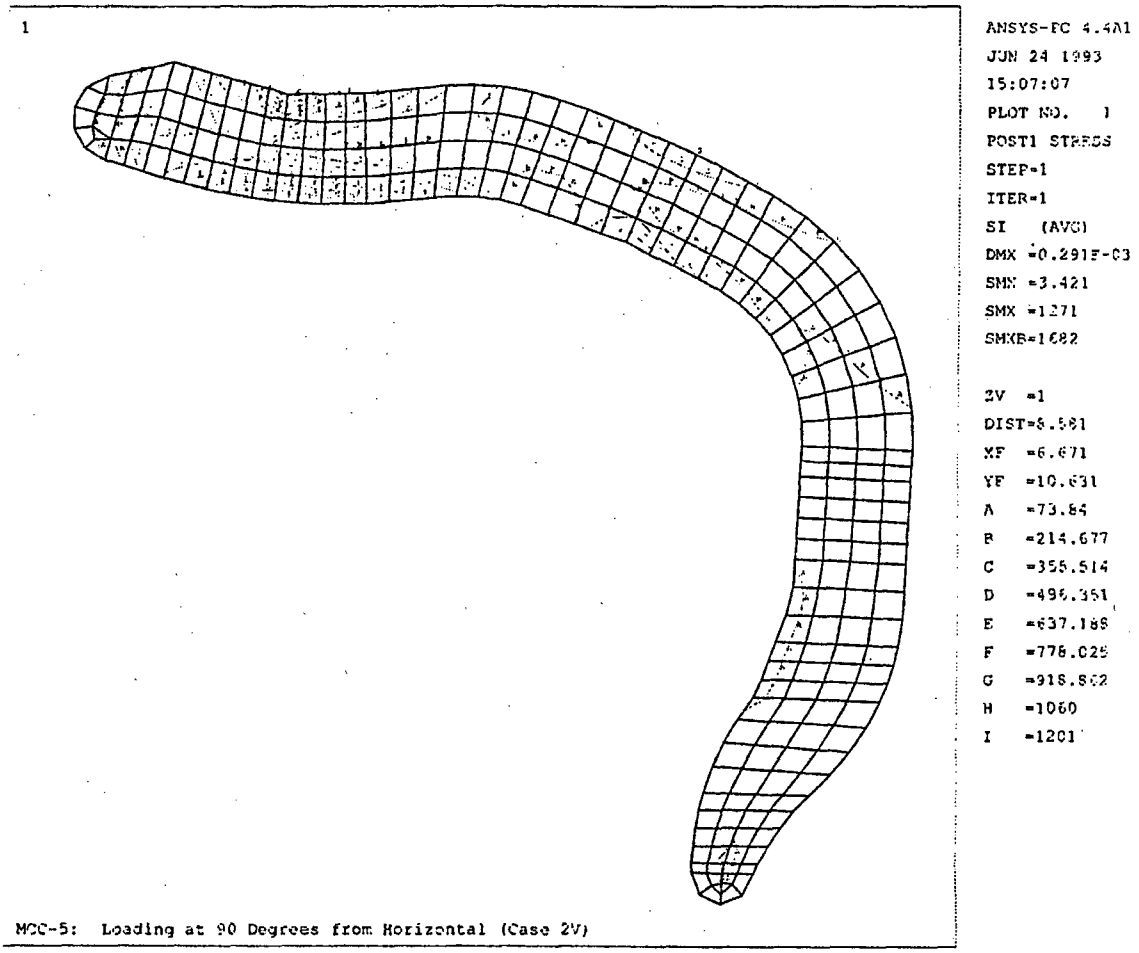


**Figure 2-6-8(f) Stress Intensity Plot for Case 2V**

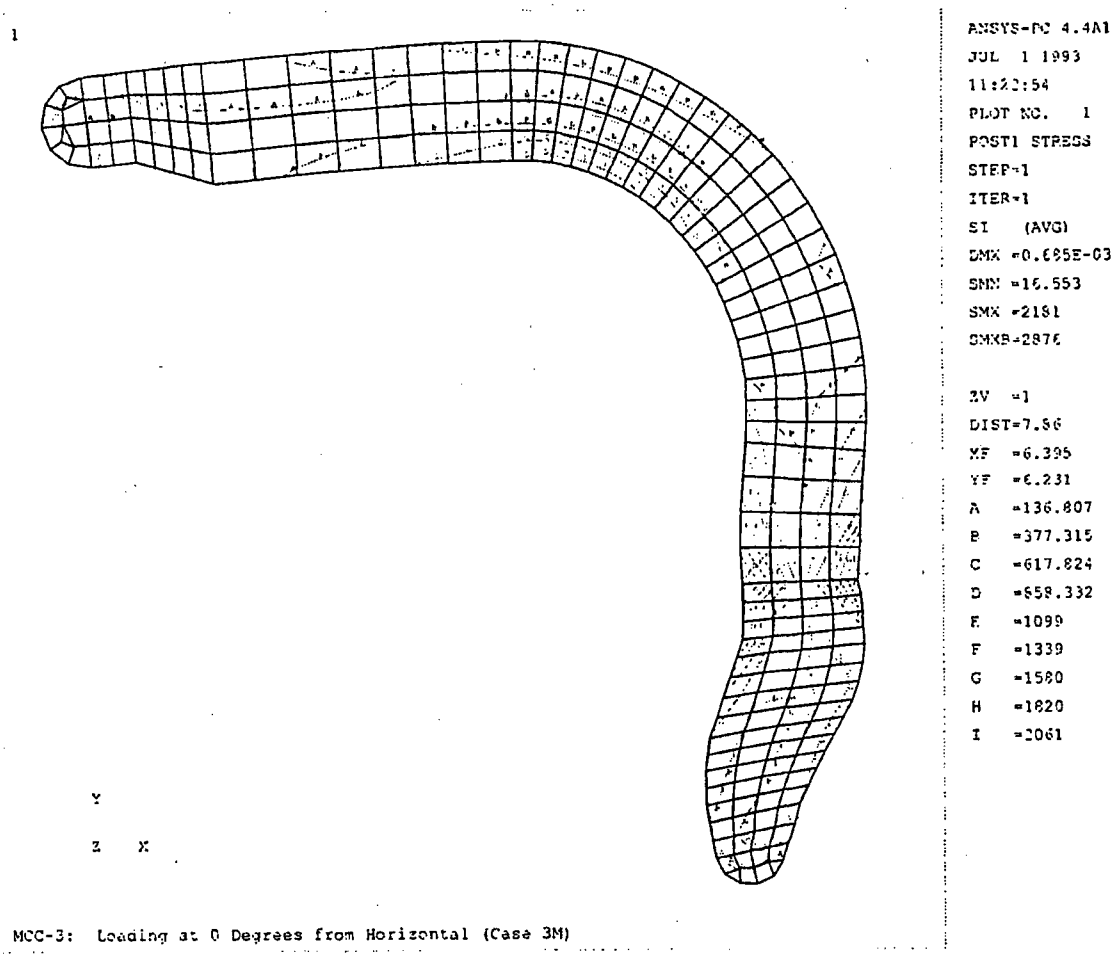


**Figure 2-6-8(g) Stress Intensity Plot for Case 3M**

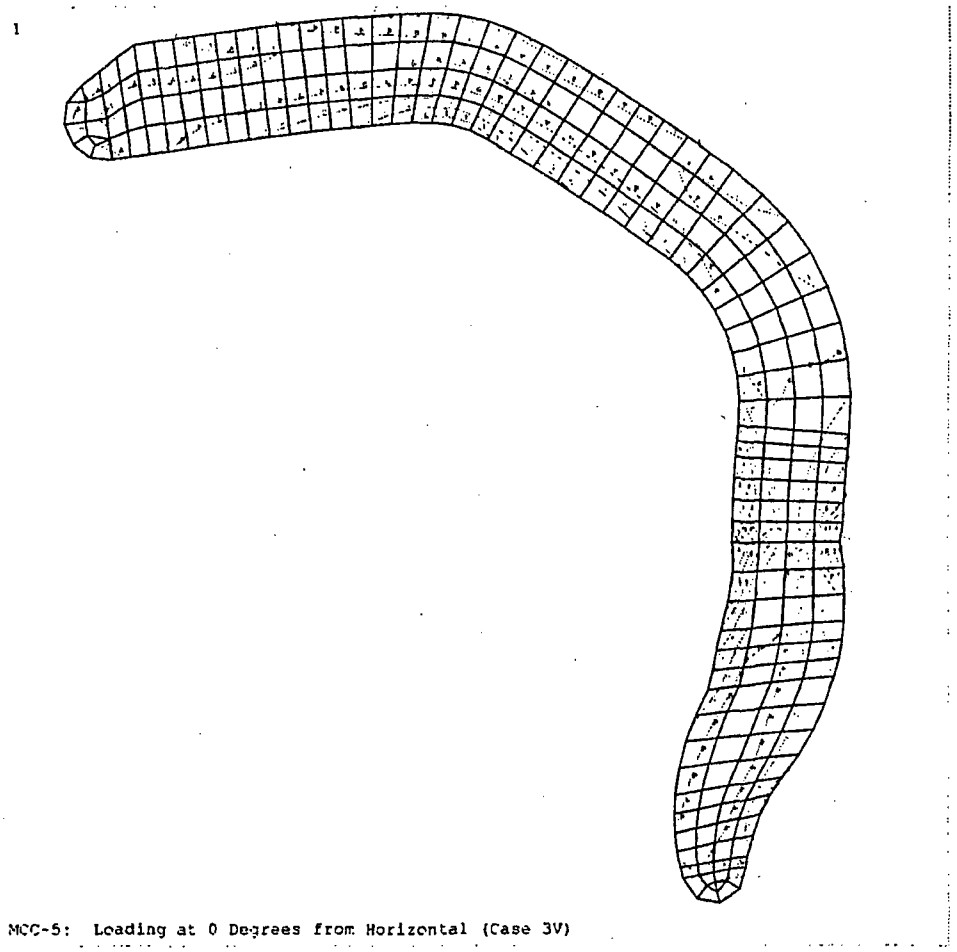


**Figure 2-6-8(h) Stress Intensity Plot for Case 3V**

# CHAPTER 3: THERMAL EVALUATION

The MCC container is limited to use for transporting unirradiated, low enriched uranium, nuclear reactor core assemblies. Therefore, thermal engineering design of the packaging, per se, is not necessary. The fuel rods, that contain the radioactive material, are designed to withstand temperatures of 1204°C (2200°F) without substantial damage. All combustible components of the container internals (e.g., the shock mounts) are postulated to have burned away for the criticality evaluation.

# APPENDIX 3-1
# REFERENCES

## REFERENCES

No documents referenced in the text of this section.

# CHAPTER 4: CONTAINMENT

## 4.1 CONTAINMENT BOUNDARY

The MCC container is limited to use for transporting unirradiated, low enriched uranium, nuclear reactor core assemblies. The radioactive material, bound in sintered pellets having very limited solubility, has minimal propensity to suspend in air. These pellets are further sealed into cladding, to form the fuel rod portion of each assembly. The principal containment boundary for the MCC container is the fuel rod cladding. Design and fabrication details for this cladding are given in Appendix 1-6 to this application.

## 4.2 REQUIREMENTS FOR NORMAL CONDITIONS OF TRANSPORT

The nature of the contained radioactive material, and the structural integrity of the fuel rod cladding and container shell, are such that there will be no release of radioactivity under normal conditions of transport.

## 4.3 CONTAINMENT REQUIREMENTS FOR THE HYPOTHETICAL ACCIDENT CONDITION

The nature of the contained radioactive material, and the integrity of the fuel rod cladding and container shell, are such that there will be no substantial release of radioactivity under hypothetical accident conditions. It is estimated that, as a result of the puncture condition, the maximum radioactive material released from damaged fuel rods might be some 450 equivalent ceramic pellets, which represents some 4000 grams of uranium with a maximum specific activity of $2.8 \times 10^{-6}$ curies/gram.

# APPENDIX 4-1
# REFERENCES

## REFERENCES

No documents referenced in the text of this section.

# CHAPTER 5: SHIELDING EVALUATION

The MCC container is limited to use for transporting unirradiated, low enriched uranium, nuclear reactor core assemblies. Therefore, shielding design of the packaging, per se, is not necessary. Typical maximum dose equivalent rates are 2.0 millirem per hour, at any point on the external surface of the container, and 0.8 millirem per hour at one meter from the external surface of the container.

# APPENDIX 5-1
# REFERENCES

## REFERENCES

No documents referenced in the text of this section.

# CHAPTER 6: CRITICALITY EVALUATION

## 6.1 DISCUSSION AND RESULTS

The contents of an MCC container are to be so limited that, for contained fuel assemblies having a $^{235}U$ enrichment up to and including five weight-percent (5 wt% $^{235}U$), the limiting $K_{eff}$, with bias and uncertainties included at the 95-percent confidence level, will not exceed 0.95 – in the most reactive credible configuration, moderated by water to the most reactive credible extent, and closely reflected by water on all sides. Also considered are the effects of fuel pin gap flooding and annular fuel blankets. No consideration of dispersible material is required, since the contents are limited to clad ceramic fuel forms.

A primary objective of the criticality evaluation is to determine: (1) What is the limiting enrichment (wt% $^{235}U$) for two fuel assemblies, without added assembly neutron absorbers, to be shipped in an MCC container having only the permanent container neutron absorber plate. For assemblies having greater than this limiting enrichment, up to and including 5 wt% $^{235}U$, either additional assembly neutron absorbers (i.e., coated pellets or cluster absorber rods), or additional container neutron absorber plates, are options. Thus, a secondary objective of the criticality evaluation is to determine: (2) When the additional assembly neutron absorber option is selected, what is the minimum number of additional absorber rods, per assembly, or when the additional container neutron absorber plate option is selected, what is the required nature and placement of the additional plates.

Significant criticality engineering design features are incorporated into the MCC container to assure that, in the event of a transport accident, structural integrity is maintained, and the assemblies will remain in a subcritical geometry. These structural features are presented in detail in Appendix 1-2. Briefly, the design assures that the container:

1. will not open along the closure flange,

2. internals will hold the contents in place,

3. neutron absorber plates will remain in place; and

4. will not experience any deformation (compression) which would serve to reduce the spacing between adjacent pairs of fuel assemblies to less than the limiting spacing value.

During normal conditions of transport, there will be a minimum of 12-inches of separation between the contents of any two containers. Any number of undamaged, unflooded MCC containers will be subcritical, since unmoderated uranium enriched to 5 wt% or less in $^{235}U$ is subcritical in any quantity under any conditions. Any number of undamaged but flooded containers will also have a $K_{eff}$ less than or equal to 0.95, since 12-inches of water separation provides isolation between the contents of any two containers; and, if the water external to the container is removed, then the contents will also drain so that the array returns to the unmoderated condition.

The Hypothetical Accident Condition array can be reduced to only two containers, crushed top-to-top, such that the spacing between the pairs of assemblies, aligned parallel to each other, will be reduced to 8.178 inches (8 inches of water plus two shell thicknesses). This array is then assumed to be flooded

(since drop tests have demonstrated that damaged containers remain substantially closed, exposure of the contained assemblies to less than full density water is not considered credible; however, calculations are included in Appendix 6-3 which show that subcriticality is also maintained at partial water densities). The heavy structural members of the base and the internal component support structures of the container are assumed to provide sufficient spacing such that any other container(s) in the shipment would be isolated from this combination by a minimum of 12-inches of water. Since only two containers will combine to form the HAC array with a $K_{eff}$ less than or equal to 0.95; and any isolated additional containers can only form similar isolated arrays, any number of the MCC containers will be subcritical under the HAC. That is, the number "N" of undamaged packages, with nothing between the packages, that would be subcritical; and, the number "N" of damaged packages, if each package were subjected to the HAC with interspersed hydrogenous moderation, that would be subcritical – are both equal to infinity.

The calculations were performed using the AMPX cross-section generation modules, NITAWL-S and XSDRNPMS, and the Monte Carlo code KENO-Va for reactivity determination. The requirement that the fuel be in assemblies in a fixed array assures that these calculations are accurate and directly applicable.

Appendix 6-2 includes a sample KENO input deck and the calculated $K_4$ results of the uncontained fuel with attributes identified in Appendix 1-5. Based on these results, the assemblies are classified into three groups; Type A assemblies have uncontained $K_4$'s less than 0.936, which encompasses all the 14x14 and 16x16 assembly lattice designs; Type B assemblies have uncontained $K_4$'s greater than 0.936 and include all the 15x15 and 17x17 lattice designs; the Type C assembly is the VVER-1000 fuel assembly which has an uncontained $K_4$ of 0.9432.

Appendix 6-3 includes sample decks and calculations for contained Type A and B fuel assemblies. For the Type A assemblies, the 14x14 OFA (optimized fuel assembly) is used exclusively for the contained calculations since this assembly was shown to be the most reactive of the Type A designs. The calculations show that Type A assemblies can be shipped with enrichments up to 5.0 wt% without the use of additional assembly neutron absorbers or additional container neutron absorber plates.

For Type B assemblies, the 17x17 OFA is used exclusively for the contained calculations since this assembly was shown to be more reactive than the other Type B designs. As with Type A assemblies, Type B assemblies can also be shipped without the use of additional neutron absorbers provided the enrichments are restricted to 4.65 wt% or less. For Type B assemblies with enrichments greater than 4.65 wt%, additional neutron absorbers are required with the exception of 17x17 STD or 17x17 XL that require additional neutron absorbers with enrichments greater than 4.85 wt%. Any of the following types and numbers of absorbers have been shown to be acceptable:

1. Assembly IFBA Rods: A minimum of 32 nominally (1X) loaded fuel rods are required in each assembly, each with a minimum coating length of 108 inches. For increased IFBA loadings (1.5X, 2X, etc.), the number of loaded fuel rods required can be reduced by the ratio of the increased loading to the nominal loading.

2. Assembly Absorber Rods: A minimum of 4 absorber rods are required in each assembly. The rods can be Pyrex BA, WABA, or Ag-In-Cd designs with a minimum length of 108 inches. The rods must be positioned within the assemblies in a symmetric pattern about the assembly center guide tube.

3. Container Absorber Plates: A minimum of 2 additional Gadolinia coated absorber plates, having the same specifications as the permanent container absorber plate, are required. The additional plates must be positioned directly below the strongback, underneath each assembly.

For the Type C assembly, the VVER-1000 is used exclusively for the contained calculations. The Type C assembly can be shipped without the use of additional neutron absorbers provided the enrichments are restricted to 4.80 wt% or less. For the Type C assembly with an enrichment greater than 4.80 wt%, additional neutron absorbers, described below, are required. It should be noted that the MCC-5 container used for the VVER-1000 assembly has permanent absorber plates between the assemblies, just as the MCC-3 and MCC-4 containers do, and permanent absorber plates under the strongback.

Any of the following types and numbers of absorbers have been shown to be acceptable:

1. Assembly IFBA rods: A minimum of 24 nominally (1X) coated fuel rods are required in each assembly, each with a minimum coating length of 108 inches. With increased IFBA loadings (1.5X, 2X, etc.), the number of loaded fuel rods required can be reduced by the ratio of the increased loading to the nominal loading.

2. Assembly Absorber Rods: A minimum of 4 absorber rods are required in each assembly. The rods can be WABA or Ag-In-Cd designs with a minimum length of 108 inches. The rods must be positioned within the assemblies in a symmetric pattern about the assembly center guide tube.

3. Guide Support Absorber Coating: A minimum coating of 0.027 grams of $Gd_2O_3/cm^2$ on the underside of the guide supports is required. The guide supports sit on the strongback and are located between the grid supports.

## 6.2 PACKAGE FUEL LOADING

The MCC container fuel loading configurations and parameters for normal transport conditions are included in Appendix 1-5 to this application. The configurations and parameters for the Hypothetical Accident Condition are included in Appendix 6-3 to this application.

## 6.3 MODEL SPECIFICATION

### 6.3.1 Description of Calculational Model

Figures 6-1 and 6-2 present a geometric description of the criticality model for the unpackaged fuel assembly evaluation, with a 17x17 OFA assembly and a VVER-1000 assembly shown respectively. The attributes of these fuel assembly designs, as well as all the other fuel assembly designs, are described in Appendix 1-5. In the unpackaged fuel assembly evaluation, each assembly is modeled as infinite in length and surrounded by 6-inches of water. The boundary conditions for all surfaces are conservatively chosen to be fully reflective (zero current), which precludes any neutron leakage from the array. With reflective boundary conditions, the calculation model actually represents an infinite array of single assemblies separated from each other by 12 inches of water. However, since twelve inches of water is sufficient to effectively isolate each assembly from its neighbors, the reactivity of the infinite array is the same as the reactivity of a single assembly.

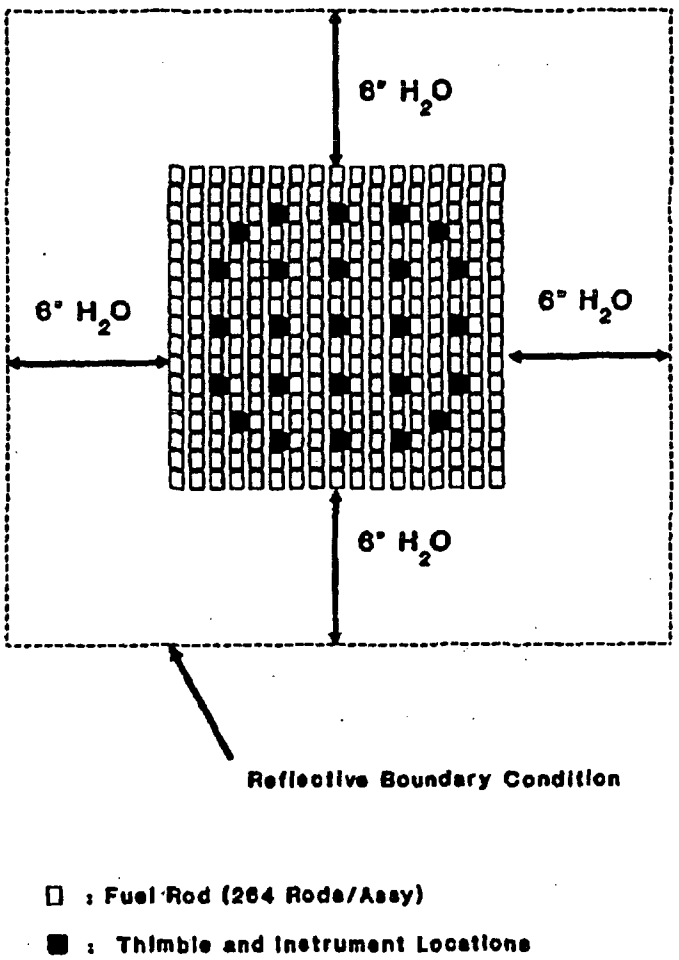


Figure 6-1 Unpackaged 17 OFA Fuel Assembly Model

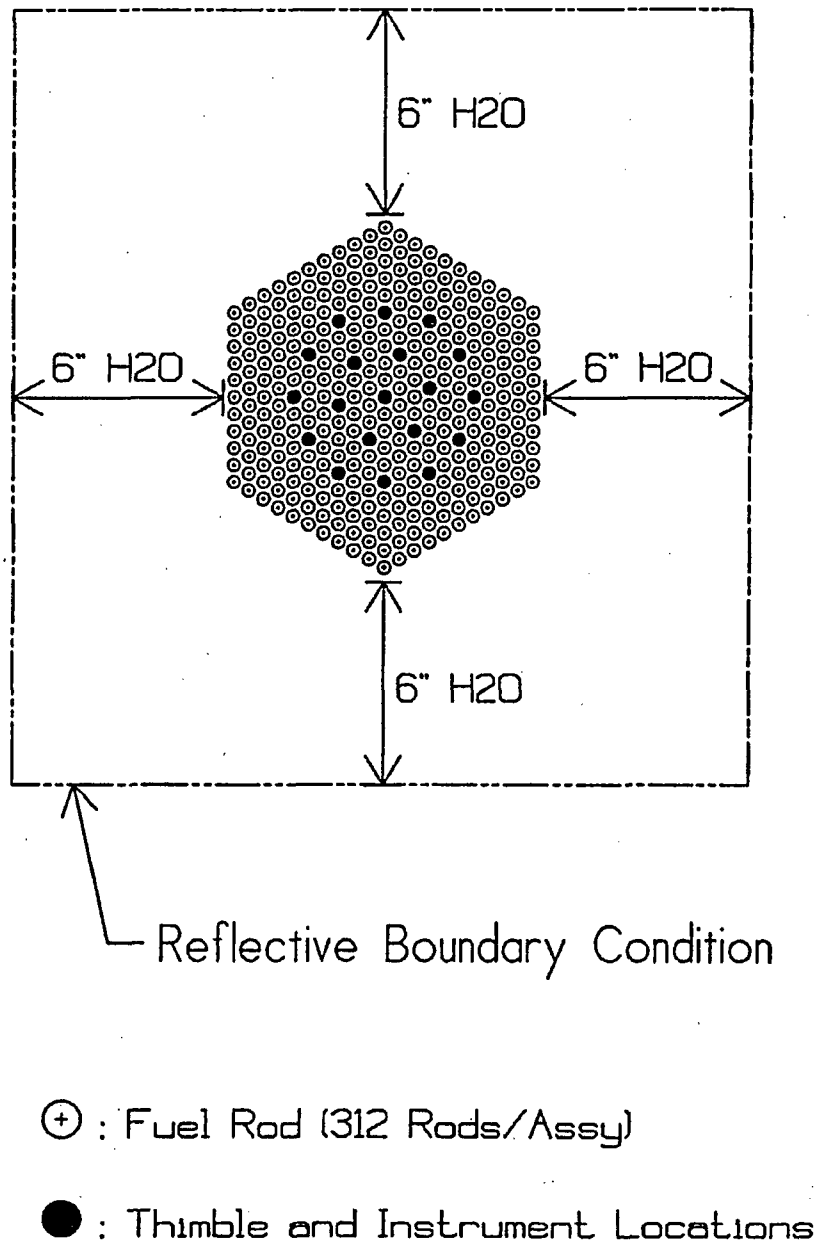


**Figure 6-2 Diagram of KENO Uncontained VVER-1000 Assembly Model**

The KENO calculational model based on Figure 6-1 uses only two geometry units to model the unpackaged fuel assembly. One unit describes the fuel rod cell, which contains an explicit geometric representation of a fuel pellet, gap, cladding, and surrounding water. The other unit describes the thimble tube cell, which has water both inside and outside of the tube. The KENO calculation model based on Figure 6-2 uses five geometry units. The first two units describe the top and bottom of a fuel rod cell. The next two units describe the top and bottom of a modified thimble tube cell. The thimble tube has been modified to fit correctly into the fuel assembly array model. The last unit is an empty water cell used to create a square assembly array in KENO. The fuel rod cells and thimble tube cells are positioned in an array to create a triangular pitch equal to the VVER-1000 fuel assembly. In modeling the fuel, the $UO_2$ atom density is calculated by assuming a $UO_2$ density that is 96.5% of theoretical (10.96 g/cc); pellet densities actually encountered typically range from 94.5% to 95.5% of theoretical. No pellet dishing fraction or chamfering is modeled, which conservatively increases the number of $^{235}U$ atoms by about 1.2%, depending on the specific pellet type. No credit is taken for the presence of naturally occurring $^{234}U$ or $^{236}U$, nor is any credit taken for assembly structural material that does not extend the full length of the assembly (i.e., grids, top and bottom nozzle, etc.). These combined assumptions result in a very conservative model of a fuel assembly.

Figure 6-3 shows the package configuration for Normal Conditions of Transport for Square Lattice Fuel Assemblies and Figure 6-4 shows the package configuration for Normal Conditions of Transport for VVER-1000 Fuel Assemblies. Since more than 6 inches of water is present between any assembly edge and the interior surface of the package shell, the assemblies in any single container will be isolated from the assemblies in nearby containers by at least 12 inches of water. Therefore, similar to the unpackaged assemblies, the reactivity of an infinite array of packages under Normal Conditions of Transport would be the same as the reactivity of any single package.

Figure 6-5 presents the Hypothetical Accident Conditions of Transport package configuration and its criticality model for square lattice fuel. For the HAC, two crushed packages are aligned top-to-top such that an array of four assemblies is created, with the assemblies in the lower container separated from the assemblies in the upper container by 8 inches of water. To simplify the calculational model, reflective boundary (zero current) conditions are employed at the vertical centerline within the container and at the horizontal interface between the lower and upper containers. In this way, the array of four assemblies is appropriately simulated, yet the model input is reduced to a representation of only one assembly. For conservatism, reflective boundary conditions are also used at the outer edges of the two crushed packages, which precludes any neutron leakage from the array. Since at least 12 inches of water separates each grouping of four assemblies in this model, the results for the infinite array are the same as for a single cluster of four assemblies. For certain higher enriched assemblies (Type B with enrichments greater than 4.75 wt%), added neutron absorbers are used to maintain $K_{eff}$ less than 0.95. The additional absorbers can be placed within the assemblies (IFBA, Pyrex BA, WABA, or Ag-In-Cd rods) or placed external to the assemblies as part of the container (Gd absorber plates). Each absorber type is described by a nominal density and manufacturing tolerance at the 95% confidence level. For calculational purposes, the modeled absorber number densities are reduced from nominal by a factor to account for the 95% manufacturing tolerance, and by an additional 25% for added conservatism.

Figure 6-6 presents the Hypothetical Accident Conditions of Transport package configuration and its criticality model for VVER-1000 Fuel Assemblies. The model is similar to the square lattice model in its conservative approximation on boundary conditions (zero current). The model has an added horizontal Gadolinia absorber underneath the strongback. As with the Type B assemblies, the VVER-1000 assemblies require added neutron absorbers at higher enrichments in order to maintain $K_{eff}$ less than 0.95. The additional absorbers can be placed within the assemblies (IFBA, WABA, or Ag-In-Cd) or placed external to the assemblies as part of the container (Gd coated guide supports). Each absorber type is described by a nominal density and manufacturing tolerance at the 95% confidence level. For calculational purposes, the modeled absorber number densities are reduced from nominal by a factor to account for the 95% manufacturing tolerance, and by an additional 25% for added conservatism.

In summary, the criticality calculations for uncontained and contained fuel assemblies incorporate many conservatisms, including:

1. Reflective boundary conditions on all peripheral surfaces to preclude any neutron leakage from the array;

2. Fuel pellets modeled at 96.5% theoretical density with no dishing or chamfering, and no credit taken for naturally occurring $^{234}U$ and $^{236}U$;

3. Fuel assemblies modeled without grids, top and bottom nozzles, etc.;

4. Neutron absorber densities reduced by manufacturing tolerances, and an additional 25% safety factor;

5. Fuel assemblies modeled intact, ignoring that HAC testing results in crushed assemblies that would have lower reactivities.

The above conservatisms result in conservative calculations of reactivity.

### 6.3.2 Package Regional Densities

Densities (g/cc) for all materials used in the calculational models for uncontained and contained analyses are presented in Figure 6-7. Atomic number densities (atoms/barn-cm) for constituent nuclides in all materials used for calculational models for uncontained and contained analyses are presented in Figure 6-8. Fissionable isotopes are considered to be at their most reactive credible concentration, assuming 5 wt% $^{235}U$. These are the number densities used in all KENO calculations.

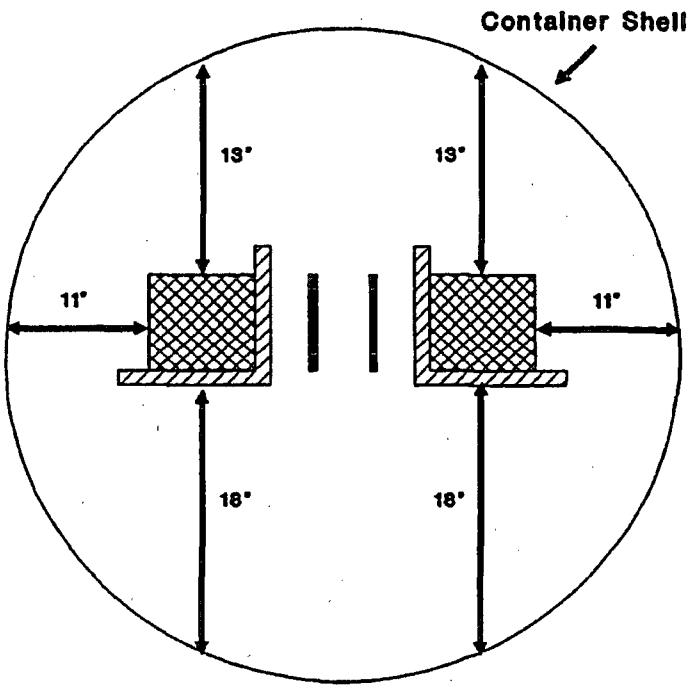


**Figure 6-3 Normal Conditions of Transport Configuration and Model for Square Lattice Fuel**

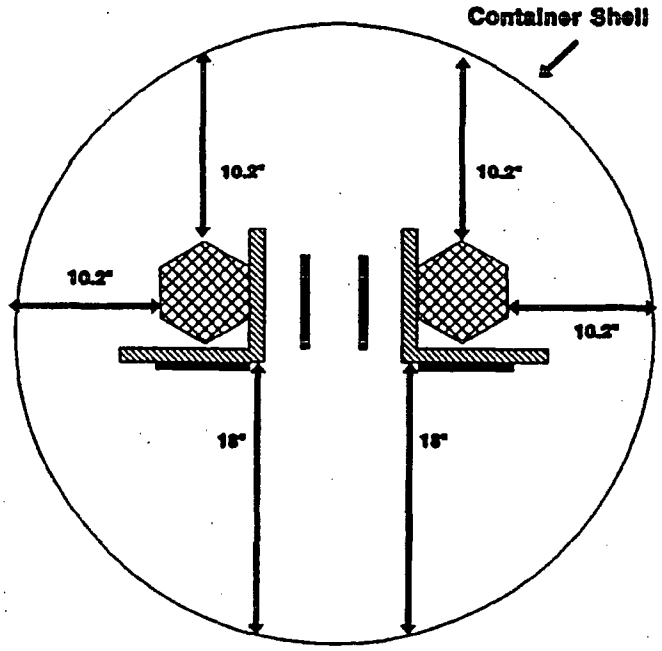


Figure 6-4 Normal Conditions of Transport Configuration and Model for VVER-1000 Fuel

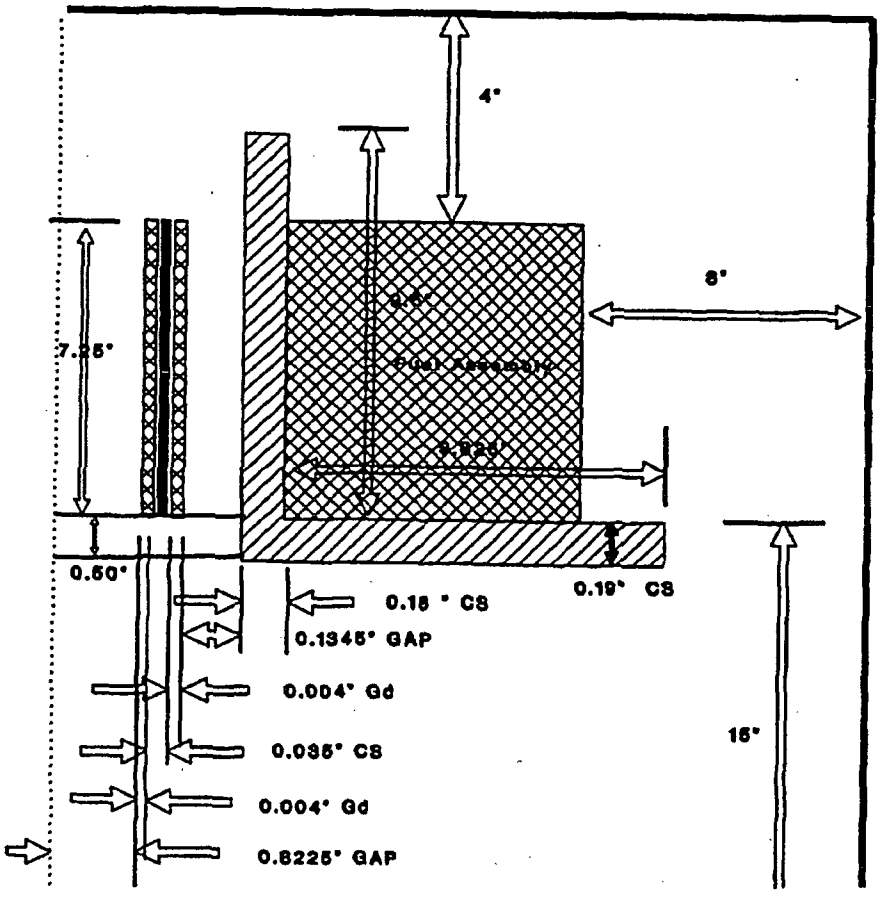


Figure 6-5 Hypothetical Accident Condition Configuration and Model for Square Lattice Fuel

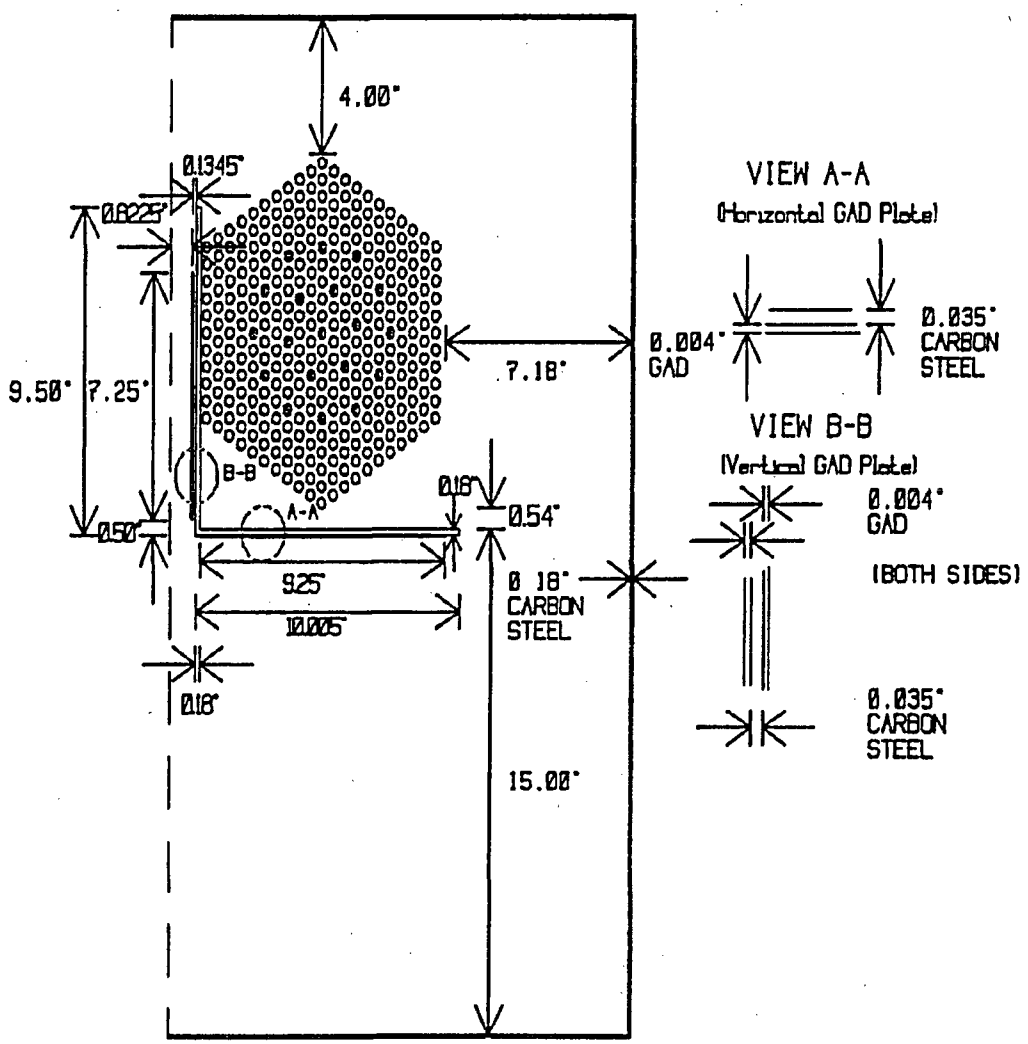


**Figure 6-6 Hypothetical Accident Condition Configuration and Model For VVER-1000 Assembly**

| Region | Material | Density |
|---|---|---|
| Fuel | $UO_2$ | 10.576 g/cc |
| Cladding & Guide Tube | Zircaloy | 6.55 g/cc |
| Container Components | Carbon Steel | 7.87 g/cc |
| Moderation And Reflection | Water | 1.0 g/cc |
| IFBA Neutron Absorber | $ZrB_2$ | 1.06875 g/cm$^2$ |
| Absorber Rods | Ag-In-Cd | 10.17 g/cc |
| Absorber Rods | Borosilicate-Pyrex | 2.3 g/cc |
| Absorber Rods | WABA | 3.68 g/cc |
| Permanent And Additional Neutron Absorber Plates | $Gd_2O_3$ | 0.02 g/cm$^2$ |

**Figure 6-7 Material Densities for KENO Calculations**

| Region | Isotope | Material ID | Number Density |
|---|---|---|---|
| $UO_2$ Fuel | $^{235}U$ | 92235 | 0.0011942 |
| | $^{238}U$ | 92238 | 0.022404 |
| | $^{16}O$ | 8016 | 0.047196 |
| Zircaloy Clad | ZIRC | 40302 | 0.043326 |
| Zircaloy Clad With ZrB | ZIRC | 40302 | 0.043326 |
| | $^{10}B$ | 5010 | 0.0001644 |
| Water | H | 1001 | 0.066854 |
| | O | 8016 | 0.033427 |
| Carbon Steel | Fe | 26000 | 0.0842011 |
| | C | 6012 | 0.0004728898 |
| | $^{55}Mn$ | 25055 | 0.0003887064 |
| | P | 15031 | 0.00005807008 |
| | S | 16032 | 0.00006642906 |
| Absorber Plate | O | 8016 | 0.009810529 |
| | $^{152}Gd$ | 64152 | 0.0000130807 |
| | $^{154}Gd$ | 64154 | 0.0001373474 |
| | $^{155}Gd$ | 64155 | 0.0009679722 |
| | $^{156}Gd$ | 64156 | 0.001347313 |
| | $^{157}Gd$ | 64157 | 0.001026835 |
| | $^{158}Gd$ | 64158 | 0.001622008 |
| | $^{160}Gd$ | 64160 | 0.001425792 |
| Borosilicate-Pyrex | $^{10}B$ | 5010 | 0.0006837358 |
| | $^{11}B$ | 5011 | 0.003862628 |
| | O | 8016 | 0.045331 |
| | Na | 11023 | 0.000880 |
| | Al | 13027 | 0.000680 |
| | Si | 14000 | 0.018040 |
| WABA | $^{10}B$ | 5010 | 0.001914 |
| | $^{11}B$ | 5011 | 0.012084 |
| | C | 6012 | 0.003772 |
| | O | 8016 | 0.039580 |
| | Al | 13027 | 0.026387 |
| Ag-In-Cd | $^{107}Ag$ | 47107 | 0.017551 |
| | $^{109}Ag$ | 47109 | 0.016305 |
| | Cd | 48000 | 0.001941 |
| | $^{113}In$ | 49113 | 0.000254 |
| | $^{115}In$ | 49115 | 0.005648 |

**Figure 6-8 Listing of KENO Material Number Densities**

## 6.4 CRITICALITY CALCULATION

### 6.4.1 Calculational or Experimental Method

The current Westinghouse design method, which insures the criticality safety of fuel assemblies in the shipping container, starts with 227 energy group cross-sections generated from ENDF/B-V data. AMPX system codes, NITAWL-S and XSDRNPMS, are used for cross-section library processing. The NITAWL-S program performs the self-shielded resonance cross-section corrections that are appropriate for each particular geometry (The Nordheim Integral Treatment is used). Energy and spatial weighting of the cross-sections are performed by the XSDRNPMS program, which is a one-dimensional transport theory code. XSDRNPMS cell models are generated for fuel cells and for representative absorber cells. Cross-sections for IFBA coated fuel are prepared by placing the $^{10}B$ material from the absorber in the clad region of the cell.

Cross-sections for structural materials are obtained by introducing trace material amounts into the moderator region of the cell. This procedure does not produce any bias in the results due to the fineness of the energy group structure. These multigroup cross-section sets are then used as input to KENO Va, which is a three dimensional Monte Carlo theory program designed for reactivity calculations.

### 6.4.2 Fuel Loading or Other Contents Loading Optimization

The geometric capabilities of KENO are used to provide essentially exact representations of actual fuel assembly and shipping container geometries. All uncontained assembly calculations are performed in two dimensional geometry, which conservatively ignores the benefits of axial leakage. For contained Type A fuel assemblies (14x14 and 16x16 designs), calculations are also performed in two dimensions. For contained Type B assemblies (15x15 and 17x17 designs), a conservative three dimensional geometry is used. The three dimensional calculations assume an active fuel stack height of 168 inches, which is conservative, since the majority of Type B fuel assembly designs are considerably shorter than 168 inches. Reflection is used at the fuel axial centerline to minimize problem size and complexity. Within the container, 5.08 inches of water is modeled at the assembly end, followed by the thin container shell and a reflective boundary condition. For contained Type C fuel assemblies (VVER-1000 design), calculations are performed with a conservative three dimensional geometry. The three dimensional calculations assume an active fuel stack height of 142.91 inches. Reflection is used a the fuel axial centerline to minimize problem size and complexity. Within the container, 6.0 inches of water is modeled at the assembly end, followed by the thin container shell and a reflective boundary conditions. This geometry model conservatively ignores the benefits of additional spacing between the fuel rod plenum and the additional neutron absorption by the top and bottom assembly structure. Where applicable, fuel pin gap flooding and annular fuel blankets are included in the calculations. When additional within-assembly neutron absorbers are required, the absorbers are modeled assuming an axial length of 108 inches, centered about the axial assembly midplane. Typically, absorbers are significantly longer than the assumed 108 inch minimum, thereby adding additional conservatism. For IFBA absorbers, the $^{10}B$ is modeled within the clad region of the fuel cell, which is consistent with the standard Westinghouse reactor core design methodology.

### 6.4.3 Criticality Results

Appendix 6-2 includes the KENO input decks and $K_{eff}$ results for the Monte Carlo criticality analysis of single fuel assemblies having attributes described in Appendix 1-5. Appendix 6-3 includes the KENO input decks and $K_{eff}$ results for the Monte Carlo criticality analyses of the MCC shipping container under infinite array Normal Condition of Transport and Hypothetical Accident Conditions.

The Hypothetical Accident Condition evaluations were performed assuming infinite array geometry, therefore these results bound the infinite array Normal Condition of Transport calculations.

For the MCC shipping container using permanent $Gd_2O_3$ absorber plates, under infinite array Hypothetical Accident Conditions, it has been calculated that the final $K_{eff}$ with bias and uncertainties at the 95% confidence level is less than 0.95 for the following conditions:

1. Type A fuel assemblies (14x14 and 16x16 designs) with maximum enrichments up to 5.0 wt%; or,

2. Type B fuel assemblies (15x15 and 17x17 designs) with maximum enrichments up to 4.65 wt%; or,

3. Type B fuel assemblies (15x15 and 17x17 designs) with maximum enrichments above 4.65 wt% with exception of 17x17 XL or 17x17 STD designs with maximum enrichments above 4.85 wt%, up to 5.0 wt%, using one of the following additional absorber options:

    a. Assembly IFBA Rods: A minimum of 32 nominally (1X) loaded fuel rods in each assembly, each with a minimum coating length of 108 inches. For increased IFBA loadings (1.5X, 2X, etc.), the number of loaded fuel rods required can be reduced by the ratio of the increased loading to the nominal loading.

    b. Assembly Absorber Rods: A minimum of 4 absorber rods in each assembly. The rods can be Pyrex BA, WABA, or Ag-In-Cd designs with a minimum length of 108 inches. The rods must be positioned within the assemblies in a symmetric pattern about the assembly center guide tube.

    c. Container Absorber Plates: A minimum of 2 additional Gadolinia coated absorber plates, having the same specifications as the permanent container absorber plates, are required. The additional plates must be positioned directly on the strongback (top or bottom), underneath each assembly.

4. The Type C fuel assembly (VVER-1000) with maximum enrichments up to 4.8 wt%; or,

5. The Type C fuel assembly (VVER-1000) with maximum enrichments above 4.8 wt%, up to 5.0 wt%, using one of the following additional absorber options:

    a. Assembly IFBA rods: A minimum of 24 nominally (1X) coated fuel rods are required in each assembly, each with a minimum coating length of 108 inches. With increased IFBA

loadings (1.X, 2X, etc.), the number of loaded fuel rods required can be reduced by the ratio of the increased loading to the nominal loading.

b. Assembly Absorber Rods: A minimum of 4 absorber rods are required in each assembly. The rods can be WABA or Ag-In-Cd designs with a minimum length of 108 inches. The rods must be positioned within the assemblies in a symmetric pattern about the assembly center guide tube.

c. Guide Plate Absorber Coating: A minimum coating of 0.027 grams of $Gd_2O_3$ per $cm^2$ on the underside of the guide plates is required. The guide plates sit on the strongback and are located between the grid supports.

## 6.5 CRITICAL BENCHMARK EXPERIMENTS

### 6.5.1 Benchmark Experiments and Applicability

The criticality calculation method and cross-section values are verified by comparison with critical experiment data for fuel assemblies similar to those for which the shipping container is designed. This benchmarking data is sufficiently diverse to establish that the method bias and uncertainty will apply to shipping container conditions which include strong neutron absorbers and large water gaps.

A set of 32 critical experiments has been analyzed using the above method to demonstrate its applicability to criticality analysis and to establish the method bias and uncertainty. The benchmark experiments cover a wide range of geometries, materials and enrichments; ranging from relatively low enriched (2.35, 2.46, and 4.31 wt%), water moderated, oxide fuel arrays, separated by various materials ($B_4C$, aluminum, steel, water, etc) that simulate LWR fuel shipping and storage conditions; to dry, harder spectrum, uranium metal cylinder arrays at high enrichments (93.2 wt%), with various interspersed materials (Plexiglas and air). Comparison with these experiments demonstrates the wide range of applicability of the method.

### 6.5.2 Details of the Benchmark Calculations

All experiments were modeled without complication. Material densities and geometries were taken directly from the references. No critical experiments were eliminated on the basis of anomalous results.

### 6.5.3 Results of the Benchmark Calculations

Descriptions and results of the 32 critical experiments as executed on a CRAY XMP computer are provided in Figure 6-9; benchmark calculation statistics are given in Figure 6-10. These results are appropriate for all calculations performed prior to January 1, 1994.

The 32 low enriched, water-moderated experiments result in an average KENO Va $K_{eff}$ of 0.9933. Comparison with the average measured experimental $K_{eff}$ of 1.0007 results in a method bias of 0.0074. The standard deviation of the bias value is 0.0013 $\Delta K$. The 95/95 one-sided tolerance limit factor for 32 values is 2.20. Thus, there is a 95 percent probability with a 95 percent confidence level that the uncertainty in reactivity, due to the method, is not greater than 0.0029 $\Delta K$.

Descriptions and results of the 32 critical experiments as executed on an HP-735 series workstation are provided in Figure 6-11; benchmark calculation statistics are given in Figure 6-12. These results are appropriate for all calculations performed after January 1, 1994.

The 32 low enriched, water-moderated experiments result in an average KENO Va $K_{eff}$ of 0.9930. Comparison with the average measured experimental $K_{eff}$ of 1.0007 results in a method bias of 0.0077. The standard deviation of the bias value is 0.0013 ΔK. The 95/95 one-sided tolerance limit factor for 32 values is 2.20. Thus, there is a 95 percent probability with a 95 percent confidence level that the uncertainty in reactivity, due to the method, is not greater than 0.0030 ΔK.

The results of even higher enrichment benchmark experiments show that the criticality method can correctly predict the reactivity of a hard spectrum environment, such as the optimum moderation scenario often considered in fresh rack and shipping cask designs. However, the results of such higher enrichment benchmarks are not incorporated into the criticality method bias because the enrichments are well beyond the range of typical applications. Basing the method bias solely on the 32 low enriched benchmarks results in a more appropriate and more conservative bias.

The final equation for all $K_{eff}$ calculations is defined as follows:

$$\text{Final } K_{eff} = K_{nom} + B_{meth} + \sqrt{(Ks_{nom})^2 + (Ks_{meth})^2}$$

where:

| | | |
|---|---|---|
| Final $K_{eff}$ | = | the calculated $K_{eff}$ with bias and all uncertainties included at the 95 percent confidence level; |
| $K_{nom}$ | = | the average $K_{eff}$ generated from KENO Va; |
| $B_{meth}$ | = | the bias associated with the KENO methodology established from comparison with critical experiments; |
| $Ks_{nom}$ | = | the 95/95 uncertainty on the KENO calculation result; |
| $Ks_{meth}$ | = | the 95/95 uncertainty associated with the KENO method bias. |

| Critical Number | Enrichment $^{235}U$ wt% | Reflector Material | Separating Material | Soluble Boron (ppm) | Measured $K_{eff}$ | KENO Reactivity $K_{eff} \pm 1\sigma$ |
|---|---|---|---|---|---|---|
| 1 | 2.46 | water | water | 0 | 1.0002 | 0.9966 ± 0.0024 |
| 2 | 2.46 | water | water | 1037 | 1.0001 | 0.9914 ± 0.0019 |
| 3 | 2.46 | water | water | 764 | 1.0000 | 0.9943 ± 0.0019 |
| 4 | 2.46 | water | $B_4C$ pins | 0 | 0.9999 | 0.9871 ± 0.0022 |
| 5 | 2.46 | water | $B_4C$ pins | 0 | 1.0000 | 0.9902 ± 0.0022 |
| 6 | 2.46 | water | $B_4C$ pins | 0 | 1.0097 | 0.9948 ± 0.0021 |
| 7 | 2.46 | water | $B_4C$ pins | 0 | 0.9998 | 0.9886 ± 0.0021 |
| 8 | 2.46 | water | $B_4C$ pins | 0 | 1.0083 | 0.9973 ± 0.0021 |
| 9 | 2.46 | water | water | 0 | 1.0030 | 0.9966 ± 0.0021 |
| 10 | 2.46 | water | water | 143 | 1.0001 | 0.9973 ± 0.0021 |
| 11 | 2.46 | water | stainless steel | 514 | 1.0000 | 0.9992 ± 0.0020 |
| 12 | 2.46 | water | stainless steel | 217 | 1.0000 | 1.0031 ± 0.0021 |
| 13 | 2.46 | water | borated aluminum | 15 | 1.0000 | 0.9939 ± 0.0022 |
| 14 | 2.46 | water | borated aluminum | 92 | 1.0001 | 0.9882 ± 0.0022 |
| 15 | 2.46 | water | borated aluminum | 395 | 0.9998 | 0.9854 ± 0.0021 |
| 16 | 2.46 | water | borated aluminum | 121 | 1.0001 | 0.9848 ± 0.0022 |
| 17 | 2.46 | water | borated aluminum | 487 | 1.0000 | 0.9892 ± 0.0021 |
| 18 | 2.46 | water | borated aluminum | 197 | 1.0002 | 0.9944 ± 0.0022 |
| 19 | 2.46 | water | borated aluminum | 634 | 1.0002 | 0.9956 ± 0.0020 |
| 20 | 2.46 | water | borated aluminum | 320 | 1.0003 | 0.9893 ± 0.0020 |
| 21 | 2.46 | water | borated aluminum | 72 | 0.9997 | 0.9900 ± 0.0020 |
| 22 | 2.35 | water | borated aluminum | 0 | 1.0000 | 0.9980 ± 0.0024 |
| 23 | 2.35 | water | stainless steel | 0 | 1.0000 | 0.9933 ± 0.0022 |
| 24 | 2.35 | water | water | 0 | 1.0000 | 0.9920 ± 0.0024 |
| 25 | 2.35 | water | stainless steel | 0 | 1.0000 | 0.9877 ± 0.0022 |
| 26 | 2.35 | water | borated aluminum | 0 | 1.0000 | 0.9912 ± 0.0022 |
| 27 | 2.35 | water | $B_4C$ | 0 | 1.0000 | 0.9921 ± 0.0021 |
| 28 | 4.31 | water | stainless steel | 0 | 1.0000 | 0.9968 ± 0.0023 |
| 29 | 4.31 | water | water | 0 | 1.0000 | 0.9963 ± 0.0027 |
| 30 | 4.31 | water | stainless steel | 0 | 1.0000 | 0.9950 ± 0.0026 |
| 31 | 4.31 | water | borated aluminum | 0 | 1.0000 | 0.9952 ± 0.0025 |
| 32 | 4.31 | water | borated aluminum | 0 | 1.0000 | 1.0006 ± 0.0024 |

**Figure 6-9 Benchmark Critical $UO_2$ Rod Lattice Experiments Using a CRAY XMP Computer**

| Number of Experiments | 32 |
|---|---|
| Average Measured $K_{eff}$ ($K_m$) | 1.0007 |
| Average KENO Va $K_{eff}$ ($K_c$) | 0.9933 |
| KENO Va Bias ($K_m - K_c$) | 0.0074 |
| Bias Standard Deviation (s) | 0.0013 |
| One Sided Tolerance Factor for 95/95 (k) | 2.20 |
| 95/95 Bias Uncertainty (ks) | 0.0029 |

**Figure 6-10 Benchmark Calculation Statistics for a CRAY XMP Computer**

| Critical Number | Enrichment $^{235}U$ wt% | Reflector Material | Separating Material | Soluble Boron (ppm) | Measured $K_{eff}$ | KENO Reactivity $K_{eff} \pm 1\sigma$ |
|---|---|---|---|---|---|---|
| 1 | 2.46 | water | water | 0 | 1.0002 | 0.9935 ± 0.0023 |
| 2 | 2.46 | water | water | 1037 | 1.0001 | 0.9936 ± 0.0019 |
| 3 | 2.46 | water | water | 764 | 1.0000 | 0.9946 ± 0.0019 |
| 4 | 2.46 | water | $B_4C$ pins | 0 | 0.9999 | 0.9877 ± 0.0022 |
| 5 | 2.46 | water | $B_4C$ pins | 0 | 1.0000 | 0.9884 ± 0.0022 |
| 6 | 2.46 | water | $B_4C$ pins | 0 | 1.0097 | 1.0013 ± 0.0022 |
| 7 | 2.46 | water | $B_4C$ pins | 0 | 0.9998 | 0.9957 ± 0.0023 |
| 8 | 2.46 | water | $B_4C$ pins | 0 | 1.0083 | 0.9991 ± 0.0021 |
| 9 | 2.46 | water | water | 0 | 1.0030 | 0.9966 ± 0.0023 |
| 10 | 2.46 | water | water | 143 | 1.0001 | 0.9971 ± 0.0020 |
| 11 | 2.46 | water | stainless steel | 514 | 1.0000 | 0.9986 ± 0.0020 |
| 12 | 2.46 | water | stainless steel | 217 | 1.0000 | 0.9941 ± 0.0021 |
| 13 | 2.46 | water | borated aluminum | 15 | 1.0000 | 0.9923 ± 0.0022 |
| 14 | 2.46 | water | borated aluminum | 92 | 1.0001 | 0.9885 ± 0.0021 |
| 15 | 2.46 | water | borated aluminum | 395 | 0.9998 | 0.9842 ± 0.0021 |
| 16 | 2.46 | water | borated aluminum | 121 | 1.0001 | 0.9847 ± 0.0021 |
| 17 | 2.46 | water | borated aluminum | 487 | 1.0000 | 0.9852 ± 0.0020 |
| 18 | 2.46 | water | borated aluminum | 197 | 1.0002 | 0.9920 ± 0.0021 |
| 19 | 2.46 | water | borated aluminum | 634 | 1.0002 | 0.9892 ± 0.0020 |
| 20 | 2.46 | water | borated aluminum | 320 | 1.0003 | 0.9946 ± 0.0020 |
| 21 | 2.46 | water | borated aluminum | 72 | 0.9997 | 0.9877 ± 0.0022 |
| 22 | 2.35 | water | borated aluminum | 0 | 1.0000 | 0.9935 ± 0.0013 |
| 23 | 2.35 | water | stainless steel | 0 | 1.0000 | 0.9957 ± 0.0012 |
| 24 | 2.35 | water | water | 0 | 1.0000 | 0.9979 ± 0.0024 |
| 25 | 2.35 | water | stainless steel | 0 | 1.0000 | 0.9896 ± 0.0024 |
| 26 | 2.35 | water | borated aluminum | 0 | 1.0000 | 0.9884 ± 0.0023 |
| 27 | 2.35 | water | $B_4C$ | 0 | 1.0000 | 0.9902 ± 0.0023 |
| 28 | 4.31 | water | stainless steel | 0 | 1.0000 | 0.9906 ± 0.0025 |
| 29 | 4.31 | water | water | 0 | 1.0000 | 0.9899 ± 0.0023 |
| 30 | 4.31 | water | stainless steel | 0 | 1.0000 | 1.0001 ± 0.0025 |
| 31 | 4.31 | water | borated aluminum | 0 | 1.0000 | 1.0007 ± 0.0025 |
| 32 | 4.31 | water | borated aluminum | 0 | 1.0000 | 1.0009 ± 0.0025 |

**Figure 6-11 Benchmark Critical $UO_2$ Rod Lattice Experiments Using an HP-735 Workstation**

| Number of Experiments | 32 |
|---|---|
| Average Measured $K_{eff}$ ($K_m$) | 1.0007 |
| Average KENO Va $K_{eff}$ ($K_c$) | 0.9930 |
| KENO Va Bias ($K_m - K_c$) | 0.0077 |
| Bias Standard Deviation (s) | 0.0013 |
| One Sided Tolerance Factor for 95/95 (k) | 2.20 |
| 95/95 Bias Uncertainty (ks) | 0.0030 |

**Figure 6-12 Benchmark Calculation Statistics for an HP-735 Workstation**

# APPENDIX 6-1
# REFERENCES

## REFERENCES


1. Ford III, W. E., et. al.; CSRL-V: Processed ENDF/B-V 227-Neutron-Group and Pointwise Cross-Section Libraries for Criticality Safety, Reactor, and Shielding Studies; NUREG/CR-2306; June 1982.

2. Greene, N. M., et. al.; AMPX: A Modular Code System for Generating Coupled Multigroup Neutron-Gamma Libraries from ENDF/B; ORNL-TM-3706; March 1976.

3. Petrie, L. M., Landers, N. F.; KENO Va – An Improved Monte Carlo Criticality Program with Supergrouping; NUREG/CR-0200; December 1984.N. M. Baldwin, "Critical Experiments Supporting Close Proximity Water Storage of Power Reactor Fuel," B&W-1484-7, July 1979.

4. S. R. Bierman and E. D. Clayton, "Criticality Separation Between Subcritical Clusters of 2.35 wt% 235U Enriched $UO_2$ Rods in Water with Fixed Neutron Poisons," PNL-2438, Pacific Northwest Laboratory, October 1977.

5. S. R. Bierman and E. D. Clayton, "Criticality Experiments with Subcritical Clusters of 2.35 wt% and 4.31 wt% 235U Enriched $UO_2$ Rods in Water at a Water-to-Fuel Volume Ratio of 1.6," PNL-3314, Pacific Northwest Laboratory, July 1980.

6. S. R. Bierman and E. D. Clayton, "Critical Separation Between Subcritical Clusters of 4.29 wt% 235U Enriched $UO_2$ Rods in Water with Fixed Neutron Poisons," PNL-2615, Pacific Northwest Laboratory, August 1979.

7. J. T. Thomas, "Critical Three-Dimensional Arrays of U(93.2) Metal Cylinders," Nuclear Science and Engineering, Volume 52, pages 350-359, 1973.

# APPENDIX 6-2
# EVALUATION OF THE NUCLEAR CRITICALITY SAFETY OF UNPACKAGED FUEL ASSEMBLIES

# EVALUATION OF THE NUCLEAR CRITICALITY SAFETY OF UNPACKAGED FUEL ASSEMBLIES

## INTRODUCTION

This section describes the methodology, calculations, and evaluation results for uncontained fuel assemblies. The results of this evaluation are used to compare the relative reactivities of all the various assembly designs and categorize the assemblies into two distinct reactivity groups. The most reactive assembly type of each group will also be identified for use in the packaged (within shipping container) reactivity evaluations.

Criticality calculations are performed using the AMPX modules NITAWL-S and XSDRNPMS for cross-section generation and KENO Va for reactivity calculations. These methods have been benchmarked to various critical experiments to verify their direct applicability to fuel assembly criticality calculations.

For reactivity evaluation, each assembly design that Westinghouse fabricates is independently modeled using the NITAWL-S/XSDRNPMS/KENO Va sequence. In KENO, each assembly is modeled as surrounded by six inches of water reflector supplemented by reflective boundary conditions, which preclude any neutron leakage from the problem.

## DESIGN METHODS

The current Westinghouse design method, which insures the criticality safety of fuel assemblies, starts with 227 energy group cross-sections generated from ENDF/B-V data. The AMPX system codes, NITAWL-S and XSDRNPMS, are used for cross-section library processing. The NITAWL-S program performs the self-shielded resonance cross-section corrections that are appropriate for each particular geometry. The Nordheim Integral Treatment is used. Energy and spatial weighting of the cross-sections is performed by the XSDRNPMS program, which is a one-dimensional transport theory code. These multigroup cross-section sets are then used as input to KENO Va, which is a three dimensional Monte Carlo theory program designed for reactivity calculations.

The criticality calculation method and cross-section values are verified by comparison with critical experiment data for fuel assemblies similar to those analyzed herein. This benchmarking data is sufficiently diverse to establish that the method bias and uncertainty will apply directly to these calculations. Details of the benchmark experiments and bias results are discussed in Chapter 6, Section 6.5.

## UNCONTAINED ASSEMBLY REACTIVITY ANALYSES

As previously mentioned, KENO Va is used to calculate the reactivity of each of the assembly types described in Appendix 1-5. Each assembly is individually modeled as infinite in length, using two dimensions, and surrounded by 6 inches of pure water reflector, conservatively ignoring the benefits of axial leakage. Figure 6-2-1 shows a representation of the KENO model for square lattice fuel and Figure 6-2-2 shows a representation of the KENO model for VVER-1000 type fuel.

Reflective boundary conditions are applied to the edges of the surrounding water reflector, to preclude any neutron leakage from the array. This modeling technique actually simulates an infinite array of individual assemblies, separated from each other by twelve inches of water. This amount of water separation is sufficient to isolate each assembly from its neighbor – therefore, the reactivity calculated for the infinite array of assemblies is the same as would be calculated for a single assembly surrounded by an infinite water reflector.

For the square lattice fuel types, the KENO calculational model uses only two geometry units to model the fuel assembly. One unit describes a fuel rod cell, which contains an explicit geometric representation of a fuel pellet, gap, cladding, and surrounding water. The other unit describes the thimble tube cell, which has water both inside and outside of the tube. For the VVER-1000 type fuel the KENO calculation model uses five geometry units. The first two units describe the top and bottom of a fuel rod cell. The next two units describe the top and bottom of a modified thimble tube cell. The thimble tube inner and outer diameters were reduced to fit correctly into the fuel assembly array model. This is a conservative modification since the amount of thimble tube material available for neutron absorption is reduced and the amount of water available for moderation is increased. The last unit is an empty water cell used to create a square assembly array in KENO. The fuel rod cells and thimble tube cells are positioned in an array to create a triangular pitch equal to the VVER-1000 fuel assembly. In modeling the fuel, the $UO_2$ atom density is calculated by assuming a $UO_2$ density that is 96.5% of theoretical (10.96 g/cc); pellet densities actually encountered typically range from 94.5% to 95.5% of theoretical. No pellet dishing fraction or chamfering is modeled, which conservatively increases the number of $^{235}U$ atoms by about 1.2%, depending on the specific pellet type. No credit is taken for the presence of naturally occurring $^{234}U$ or $^{236}U$, nor is any credit taken for assembly structural material that does not extend the full length of the assembly (i.e., grids, top and bottom nozzle, etc.). These combined assumptions result in a very conservative model of a fuel assembly.

## UNCONTAINED ASSEMBLY REACTIVITY RESULTS

Table 6-2-1 presents the reactivity results for each of the different fuel assembly designs described in Appendix 1-5. The fuel in all assemblies is enriched to 5.0 wt%.

The results show that the 14x14 and 16x16 fuel assembly designs are significantly less reactive than similarly enriched 15x15 and 17x17 designs. The VVER-1000 type fuel assembly has a reactivity which is greater than the 15x15 and 17x17 designs but less than the 14x14 and 16x16 designs. The 14x14 and 16x16 designs will be categorized as Type A assemblies; all of these assemblies have an uncontained $K_{eff}$ (at the 95/95 confidence level) less than or equal to 0.936. Of the Type A assemblies, the 14x14 OFA is the most reactive type, and will be used as the Type A fuel assembly representative for packaged (within container) calculations. The KENO input listing for the unpackaged 14x14 OFA assembly calculation is provided in Table 6-2-2.

The 15x15 and 17x17 fuel assembly designs are categorized as Type B assemblies; all of these assemblies have an uncontained $K_{eff}$ (at the 95/95 confidence level) greater than 0.936. Of the Type B assembly designs, the 17x17 OFA is the most reactive type, and will be used as the Type B fuel assembly representative for packaged (within container) calculations. The KENO input listing for the unpackaged 17x17 OFA assembly calculation is provided in Table 6-2-3.

The VVER-1000 type fuel assembly design is categorized as the Type C assembly. This assembly has an uncontained $K_{eff}$ (at the 95/95 confidence level) of 0.9432. It is also the only fuel assembly type which has a triangular lattice. Packaged (within container) calculations for Type C fuel assemblies will use the VVER-1000 type fuel assembly. The KENO input listing for the unpackaged VVER-1000 type fuel assembly calculation is provided in Table 6-2-4.

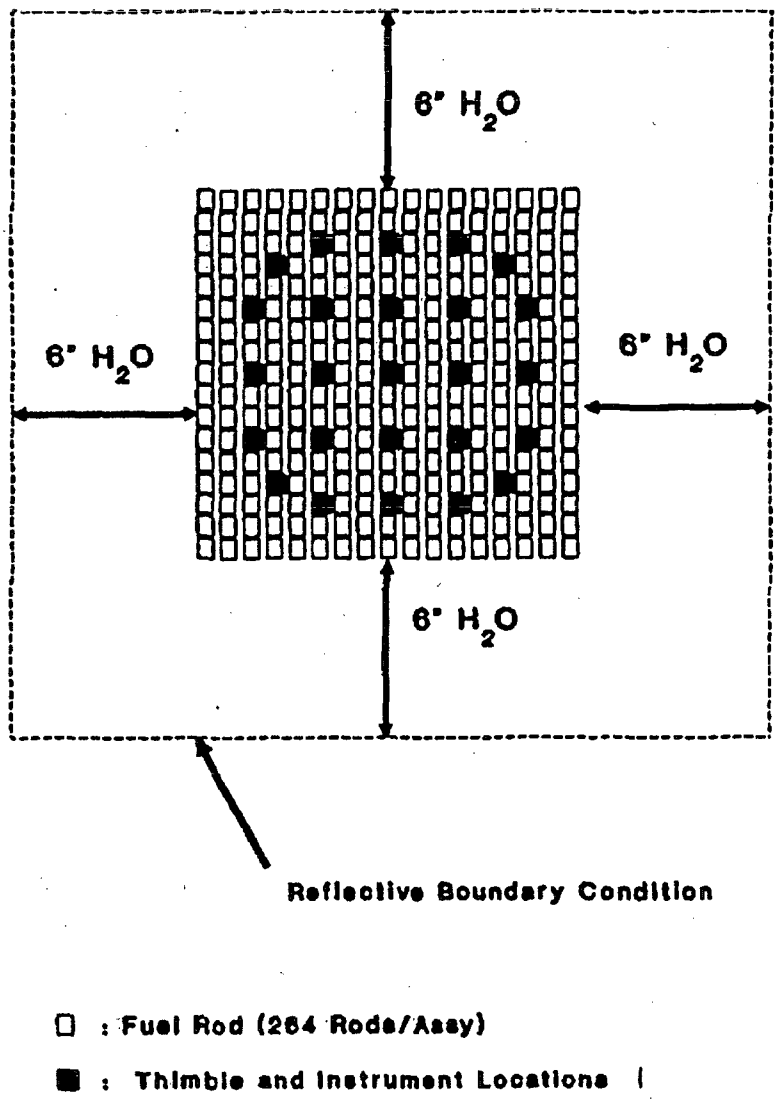


Figure 6-2-1 Diagram of KENO Uncontained Assembly Model for Square Lattice Fuel

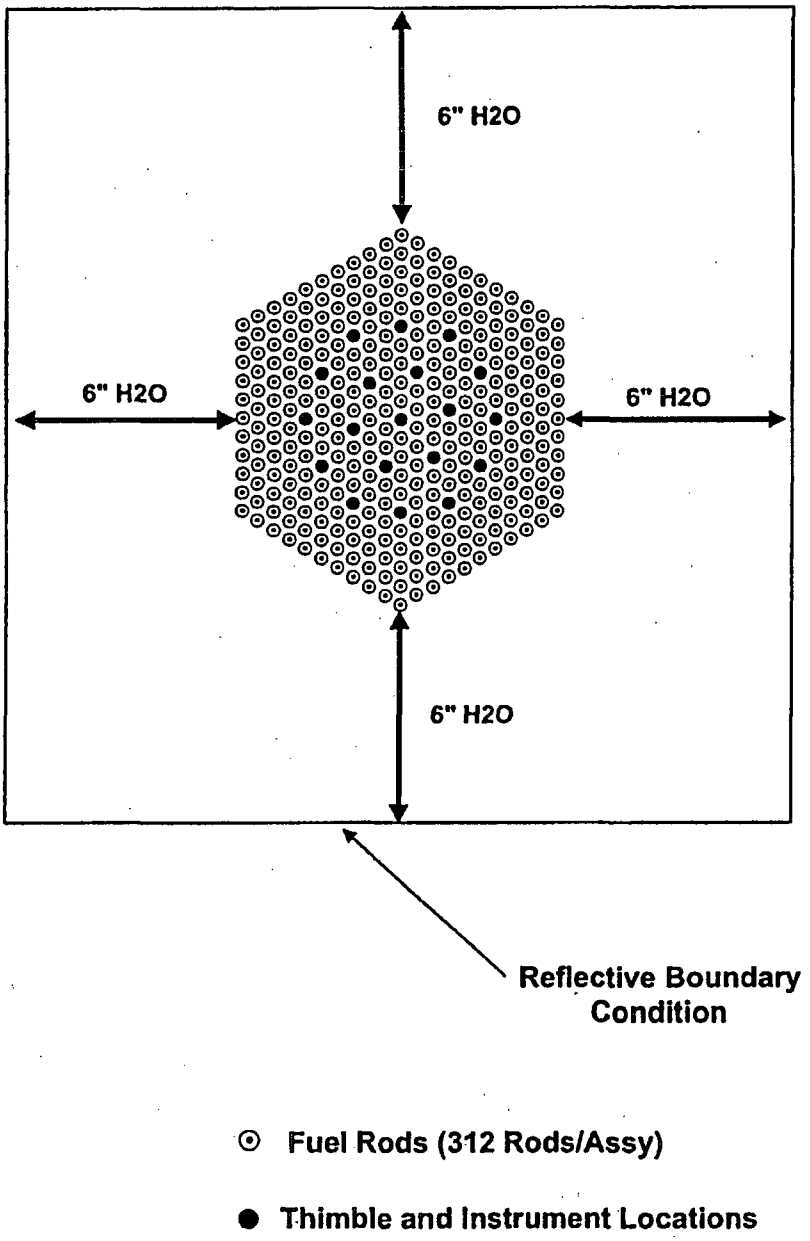


Figure 6-2-2 Diagram of KENO Uncontained VVER-1000 Assembly Model

| Table 6-2-1 Reactivity Results for Uncontained Assemblies | | | | | |
|---|---|---|---|---|---|
| **Lattice** | **Fuel Type** | | **KENO $K_{eff}$** | **1σ** | **95/95 With Bias** |
| 14X14 (Type A) | STD | | 0.89718 | 0.00436 | 0.9124 |
| | 422V+ | | 0.90226 | 0.00103 | 0.9134 |
| | OFA | | 0.91967 | 0.00505 | 0.9359 |
| | CE1 | | 0.91445 | 0.00436 | 0.9296 |
| | CE2 | | 0.92051 | 0.00395 | 0.9350 |
| | SS | | 0.87071 | 0.00438 | 0.8859 |
| 16X16 (Type A) | STD | | 0.89024 | 0.00444 | 0.9055 |
| | CE | | 0.91462 | 0.00464 | 0.9302 |
| 15X15 (Type B) | STD | | 0.94778 | 0.00453 | 0.9632 |
| | OFA | | 0.94672 | 0.00409 | 0.9615 |
| | B & W | | 0.94447 | 0.00455 | 0.9599 |
| 17X17 (Type B) | | GT1 | 0.93924 | 0.418 | 0.9541 |
| | STD | GT1 | 0.94144 | 0.00144 | 0.9523 |
| | | GT3 | 0.94202 | 0.00152 | 0.9536 |
| | OFA | | 0.94935 | 0.00430 | 0.9644 |
| VVER-1000 (Type C) | | | 0.92790 | 0.00448 | 0.9432 |

**Table 6-2-2 Listing of KENO Input for 14x14 OFA Uncontained Assembly**

```
READ PARAMETERS
  TME=6.0   RUN=YES   PLT=YES
  GEN=900   NPG=300   NSK=005   LIB=41
  XS1=YES   NUB=YES
END PARAMETERS

READ MIXT  SCT=2
MIX= 1
' UO2 PELLET 5.00 W/O (96.5% TD, 0% DISH)
          1292235     0.0011942
          1292238     0.022404
            18016     0.047196
MIX= 2
' ZIRC FUEL ROD CLADDING
           240302     0.043326
MIX= 3
' H2O AT 1.00 G/CC
            31001     0.066854
            38016     0.033427
END MIXT

READ GEOMETRY
UNIT 1
COM=" 14X14 OFA FUEL ROD "
CYLINDER    1  1    0.437388  30.0  0.0
CYLINDER    0  1    0.44628   30.0  0.0
CYLINDER    2  1    0.50800   30.0  0.0
CUBOID      3  1  4P0.70612   30.0  0.0
UNIT 2
COM=" 14X14 OFA GUIDE TUBE "
CYLINDER    3  1    0.62484   30.0  0.0
CYLINDER    2  1    0.66802   30.0  0.0
CUBOID      3  1  4P0.70612   30.0  0.0
UNIT 3
COM=" 14X14 OFA INSTRUMENT TUBE "
CYLINDER    3  1    0.44704   30.0  0.0
CYLINDER    2  1    0.50673   30.0  0.0
CUBOID      3  1  4P0.70612   30.0  0.0
GLOBAL
UNIT 4
COM=" 14X14 OFA ASSEMBLY IN H2O "
ARRAY 1  2R-9.88568  0.0
REPLICATE   3  1  4R15.2400    0.0  0.0  1
END GEOM

READ ARRAY
ARA=1 NUX=14 NUY=14 NUZ=1 COM=" 14X14 OFA ASSEMBLY "
LOOP
 1   1  14   1     1  14   1     1   1   1
 2   3  12   3     3  12   9     1   1   1
 2   3  12   9     6   9   3     1   1   1
 2   5  10   5     5  10   5     1   1   1
 3   7   7   1     8   8   1     1   1   1
END LOOP
END ARRAY
```

**Table 6-2-2 Listing of KENO Input for 14x14 OFA Uncontained Assembly (cont.)**

```
READ BOUNDS
ALL=SPECULAR
END BOUNDS

READ PLOT
  TTL='BOX SLICE THROUGH ASSEMBLY & H2O '
  PIC=BOX
  NCH='OFGIW'
  XUL=-25.12568 YUL= 25.12568 ZUL= 15.0
  XLR= 25.12568 YLR=-25.12568 ZLR= 15.0
  UAX=1.0    VDN=-1.0   NAX=130
END PLOT
END DATA
```

**Table 6-2-3 Listing of KENO Input for 17x17 OFA Uncontained Assembly**

```
READ PARAMETERS
  TME=6.0   RUN=YES   PLT=YES
  GEN=900   NPG=300   NSK=005   LIB=41
  XS1=YES   NUB=YES
END PARAMETERS

READ MIXT  SCT=2
MIX= 1
' UO2 PELLET 5.00 W/O (96.5% TD, 0% DISH)
          1292235     0.0011942
          1292238     0.022404
            18016     0.047196
MIX= 2
' ZIRC FUEL ROD CLADDING
           240302     0.043326
MIX= 3
' H2O AT 1.00 G/CC
            31001     0.066854
            38016     0.033427
END MIXT

READ GEOMETRY
UNIT 1
COM=" 17X17 OFA FUEL ROD "
CYLINDER    1  1    0.392176  30.0  0.0
CYLINDER    0  1    0.40005   30.0  0.0
CYLINDER    2  1    0.45720   30.0  0.0
CUBOID      3  1  4P0.62992   30.0  0.0
UNIT 2
COM=" 17X17 OFA GUIDE TUBE & INSTRUMENT TUBE "
CYLINDER    3  1    0.56134   30.0  0.0
CYLINDER    2  1    0.60198   30.0  0.0
CUBOID      3  1  4P0.62992   30.0  0.0
GLOBAL
UNIT 3
COM=" 17X17 OFA ASSEMBLY IN H2O "
ARRAY 1  2R-10.70864  0.0
REPLICATE   3  1  4R15.2400    0.0  0.0  1
END GEOM

READ ARRAY
ARA=1 NUX=17 NUY=17 NUZ=1 COM=" 17X17 OFA ASSEMBLY "
LOOP
 1   1  17   1     1  17   1     1   1   1
 2   3  15   3     6  12   3     1   1   1
 2   4  14  10     4  14  10     1   1   1
 2   6  12   3     3  15  12     1   1   1
END LOOP
END ARRAY

READ BOUNDS
ALL=SPECULAR
END BOUNDS
```

**Table 6-2-3 Listing of KENO Input for 17x17 OFA Uncontained Assembly (cont.)**

```
READ PLOT
  TTL='BOX SLICE THROUGH ASSEMBLY & H2O '
  PIC=BOX
  NCH='OFGW'
  XUL=-25.94864 YUL= 25.94864 ZUL= 15.0
  XLR= 25.94864 YLR=-25.94864 ZLR= 15.0
  UAX=1.0    VDN=-1.0   NAX=130
END PLOT
END DATA
```

**Table 6-2-4 Listing of KENO Input for Type C Assembly**

```
TITLE-VVER 1000 AT 5.00 W/O IN H2O

READ PARAMETERS
  TME=06     RUN=YES    PLT=YES
  GEN=900    NPG=300    NSK=005    LIB=41
  XS1=YES    NUB=YES
END PARAMETERS

READ MIXT  SCT=2
MIX= 1
'  UO2 PELLET 5.00 W/O (96.5% TD, 0% DISH)
           192235      0.0011942
           192238      0.022404
            18016      0.047196
MIX= 2
'  ZIRC FUEL ROD CLADDING
           240302      0.043326
MIX= 3
'  H2O AT 1.00 G/CC
            31001      0.066854
            38016      0.033427
END MIXT

READ GEOMETRY

UNIT 1
COM=" 17OFA FUEL ROD - BOTTOM HALF "
ZHEMICYL-Y  1  1    0.392176                                30.0 0.0
ZHEMICYL-Y  0  1    0.40005                                 30.0 0.0
ZHEMICYL-Y  2  1    0.45720                                 30.0 0.0
CUBOID      3  1    0.55209  -0.55209   0.00000  -0.63750   30.0 0.0

UNIT 2
COM=" 17OFA FUEL ROD - TOP HALF "
ZHEMICYL+Y  1  1    0.392176                                30.0 0.0
ZHEMICYL+Y  0  1    0.40005                                 30.0 0.0
ZHEMICYL+Y  2  1    0.45720                                 30.0 0.0
CUBOID      3  1    0.55209  -0.55209   0.63750   0.00000   30.0 0.0

UNIT 3
COM=" VVER 1000 MODIFIED GT/IT - BOTTOM HALF "
ZHEMICYL-Y  3  1    0.4710                                  30.0 0.0
ZHEMICYL-Y  2  1    0.5400                                  30.0 0.0
CUBOID      3  1    0.55209  -0.55209   0.00000  -0.63750   30.0 0.0

UNIT 4
COM=" VVER 1000 MODIFIED GT/IT - TOP HALF "
ZHEMICYL+Y  3  1    0.4710                                  30.0 0.0
ZHEMICYL+Y  2  1    0.5400                                  30.0 0.0
CUBOID      3  1    0.55209  -0.55209   0.63750   0.00000   30.0 0.0

UNIT 5
COM=" EMPTY WATER CELL - TOP OR BOTTOM HALF "
CUBOID      3  1    0.55209  -0.55209   0.63750   0.00000   30.0 0.0

GLOBAL
```

**Table 6-2-4 (cont.) Listing of KENO Input for Type C Assembly**

```
UNIT 6
COM=" VVER 1000 ASSEMBLY IN H2O "
ARRAY 1            -11.59392            -13.38750              0.0
CUBOID      3  1    42.07392 -42.07392  43.86758 -43.86750   30.0 0.0

END GEOM

READ ARRAY
ARA=1 NUX=21 NUY=42 NUZ=1 COM=" VVER 1000 ASSEMBLY IN H2O "
LOOP
 1   1  21   1     1  42   1     1   1   1
 2   2  20   2     1  41   2     1   1   1
 2   1  21   2     2  42   2     1   1   1
 3   5   5   1    21  21   1     1   1   1
 4   5   5   1    22  22   1     1   1   1
 3   6   6   1    16  26  10     1   1   1
 4   6   6   1    17  27  10     1   1   1
 3   8   8   1    12  20   8     1   1   1
 4   8   8   1    13  21   8     1   1   1
 3   8   8   1    30  30   1     1   1   1
 4   8   8   1    31  31   1     1   1   1
 3   9   9   1    25  25   1     1   1   1
 4   9   9   1    26  26   1     1   1   1
 3  10  10   1    16  16   1     1   1   1
 4  10  10   1    17  17   1     1   1   1
 3  11  11   1    11  31  10     1   1   1
 4  11  11   1    12  32  10     1   1   1
 3  12  12   1    26  26   1     1   1   1
 4  12  12   1    27  27   1     1   1   1
 3  13  13   1    17  17   1     1   1   1
 4  13  13   1    18  18   1     1   1   1
 3  14  14   1    12  22  10     1   1   1
 4  14  14   1    13  23  10     1   1   1
 3  14  14   1    30  30   1     1   1   1
 4  14  14   1    31  31   1     1   1   1
 3  16  16   1    16  26  10     1   1   1
 4  16  16   1    17  27  10     1   1   1
 3  17  17   1    21  21  10     1   1   1
 4  17  17   1    22  22  10     1   1   1
 5   1  10   1     1  42  41     1   1   1
 5   1   9   1     2  41  39     1   1   1
 5   1   8   1     3  40  37     1   1   1
 5   1   7   1     4  39  35     1   1   1
 5   1   6   1     5  38  33     1   1   1
 5   1   5   1     6  37  31     1   1   1
 5   1   4   1     7  36  29     1   1   1
 5   1   3   1     8  35  27     1   1   1
 5   1   2   1     9  34  25     1   1   1
 5   1   1   1    10  33  23     1   1   1
 5  12  21   1     1  42  41     1   1   1
 5  13  21   1     2  41  39     1   1   1
 5  14  21   1     3  40  37     1   1   1
 5  15  21   1     4  39  35     1   1   1
 5  16  21   1     5  38  33     1   1   1
 5  17  21   1     6  37  31     1   1   1
 5  18  21   1     7  36  29     1   1   1
```

**Table 6-2-4 Listing of KENO Input for Type C Assembly (cont.)**

```
 5  19  21   1     8  35  27     1   1   1
 5  20  21   1     9  34  25     1   1   1
 5  21  21   1    10  33  23     1   1   1
END LOOP
END ARRAY
 READ BOUNDS
ALL=SPECULAR
END BOUNDS
 READ PLOT
  TTL='MAT SLICE THROUGH ASSEMBLY CENTER '
  PIC=MAT
  NCH='0.ZWSGS'
  XUL= -7.00000 YUL=  7.00000 ZUL= 15.0
  XLR=  7.00000 YLR= -7.00000 ZLR= 15.0
  UAX=1.0    VDN=-1.0   NAX=130
END
  TTL='MAT SLICE THROUGH ASSEMBLY UNIT '
  PIC=MAT
  NCH='0.ZWSGS'
  XUL=-14.00000 YUL= 14.00000 ZUL= 15.0
  XLR= 14.00000 YLR=-14.00000 ZLR= 15.0
  UAX=1.0    VDN=-1.0   NAX=130
END
  TTL='MAT SLICE THROUGH ASSEMBLY & H2O '
  PIC=MAT
  NCH='0.ZWSGS'
  XUL=-42.07392 YUL= 43.86758 ZUL= 15.0
  XLR= 42.07392 YLR=-43.86758 ZLR= 15.0
  UAX=1.0    VDN=-1.0   NAX=130
END PLOT
END DATA
(EOR)
```

# APPENDIX 6-3
# EVALUATION OF THE NUCLEAR CRITICALITY SAFETY OF PACKAGED FUEL ASSEMBLIES

# EVALUATION OF THE NUCLEAR CRITICALITY SAFETY OF PACKAGED FUEL ASSEMBLIES

## INTRODUCTION

This section describes the methodology, calculations, and evaluation results for contained fuel assemblies. The results of this evaluation are used to define the basic enrichment limits for all the various fuel assembly designs, and to determine the requirements for using added neutron absorbers, when needed. (For economic reasons, an evaluation for shipping close-packed fuel rods in MCC containers is also described – in event a future amendment is pursued to enable such package use.)

Criticality of the fuel assemblies in the fuel shipping container is prevented by the design of the container which limits fuel assembly interaction. Fuel assembly interaction is controlled by the fixed configuration of assemblies within the container and the permanent $Gd_2O_3$ neutron absorbers positioned between the assemblies. The design basis for preventing criticality is that, including uncertainties, there is a 95 percent probability at a 95 percent confidence level that the effective neutron multiplication factor, $K_{eff}$, of the assembly array will be less than 0.95 for the Hypothetical Accident Condition (HAC) under credible fully flooded and non-credible "optimum moderation" conditions. (Since drop tests have demonstrated that damaged containers remain substantially closed, exposure of the contained assemblies to less than full density water is not considered credible).

The HAC model for the shipping container analysis is based on two flooded containers, crushed top-to-top, such that the two assemblies in one container are separated from the two assemblies in the other container by eight inches of moderator. By applying reflective boundary conditions at the outer edges of this model, an infinite array of HAC container configurations is represented. The container shells are assumed to be in place, with adjacent container shells in contact with each other.

## DESIGN METHODS

The current Westinghouse design method, which insures the criticality safety of fuel assemblies, starts with 227 energy group cross-sections generated from ENDF/B-V data. The AMPX system codes, NITAWL-S and XSDRNPMS, are used for cross-section library processing. The NITAWL-S program performs the self-shielded resonance cross-section corrections that are appropriate for each particular geometry. The Nordheim Integral Treatment is used. Energy and spatial weighting of the cross-sections is performed by the XSDRNPMS program which is a one-dimensional transport theory code. These multigroup cross-section sets are then used as input to KENO Va, which is a three dimensional Monte Carlo theory program designed for reactivity calculations.

The criticality calculation method and cross-section values are verified by comparison with critical experiment data for fuel assemblies similar to those analyzed herein. This benchmarking data is. sufficiently diverse to establish that the method bias and uncertainty will apply directly to these calculations. Details of the benchmark experiments and bias results are discussed in Chapter 6, Section 6.5.

## ANALYSIS FOR TYPE A ASSEMBLIES

Type A fuel assemblies are those which have been shown in Appendix 6-2 to have an uncontained (single assembly surrounded by water) reactivity, including biases and 95/95 uncertainties, of less than 0.936. Type A assemblies include all 14 X 14 and 16 X 16 fuel assembly designs, with attributes described in Appendix 1-5. The 14 X 14 Optimized Fuel Assembly (OFA) was identified as the most reactive of the various Type A assemblies, hence it will be used for the Type A assembly container calculations presented herein.

Figure 6-3-1 shows the geometry of the HAC which is modeled in KENO. For the Type A assemblies, KENO is used to provide an essentially exact two-dimensional geometric representation of the fuel assembly and shipping container. With two dimensions, the fuel assembly and container are assumed to be infinitely long, which conservatively ignores the benefits of axial neutron leakage. As described in the introduction, reflective boundary conditions are used at the edges of the two crushed containers to preclude any neutron leakage from the array. Using these boundary conditions is conservative since an infinite array of crushed containers is simulated.

The KENO calculational model uses only two geometry units to model the fuel assembly. One unit describes a fuel rod cell, which contains an explicit geometric representation of a fuel pellet, gap, cladding, and surrounding water. The other unit describes the thimble tube cell, which has water both inside and outside of the tube. In modeling the fuel, the $UO_2$ atom density is calculated by assuming a $UO_2$ density that is 96.5% of theoretical (10.96 g/cc); pellet densities actually encountered typically range from 94.5% to 95.5% of theoretical. No pellet dishing fraction or chamfering is modeled, which conservatively increases the number of $^{235}U$ atoms by about 1.2%, depending on the specific pellet type. No credit is taken for the presence of naturally occurring $^{234}U$ or $^{236}U$, nor is any credit taken for assembly structural material that does not extend the full length of the assembly (i.e., grids, top and bottom nozzle, etc.). These combined assumptions result in a very conservative model of a fuel assembly.

The shipping container material and structure which surrounds the fuel assembly is modeled in KENO using three geometric units. The strongback, which is the 0.18 inch thick, 90 degree angled, carbon steel structure to which the assembly is clamped, is modeled as two plates; a vertical plate and a horizontal plate. The permanently mounted Gadolinia absorber sheet (0.035 inch carbon steel sheet coated with $Gd_2O_3$ on both sides) is modeled as a single unit and positioned within the shipping container as shown in Figure 6-3-1.

With the top-crush accident assumed for the HAC, the fuel assemblies within the container are separated from the outer container shell by 4 inches at the top, 8 inches at the sides and 15 inches at the bottom. Thus, when two containers are crushed top-to-top, the two assemblies in one container are separated from the two assemblies in the other container by eight inches of moderator. By applying reflective boundary conditions at the outer edges of the containers, an infinite array of HAC container of configurations is represented. The container shells are assumed to be in place, with adjacent container shells in contact with each other. To simplify the KENO model geometry, only half the shipping container is modeled with a reflective boundary condition used at the vertical centerline.

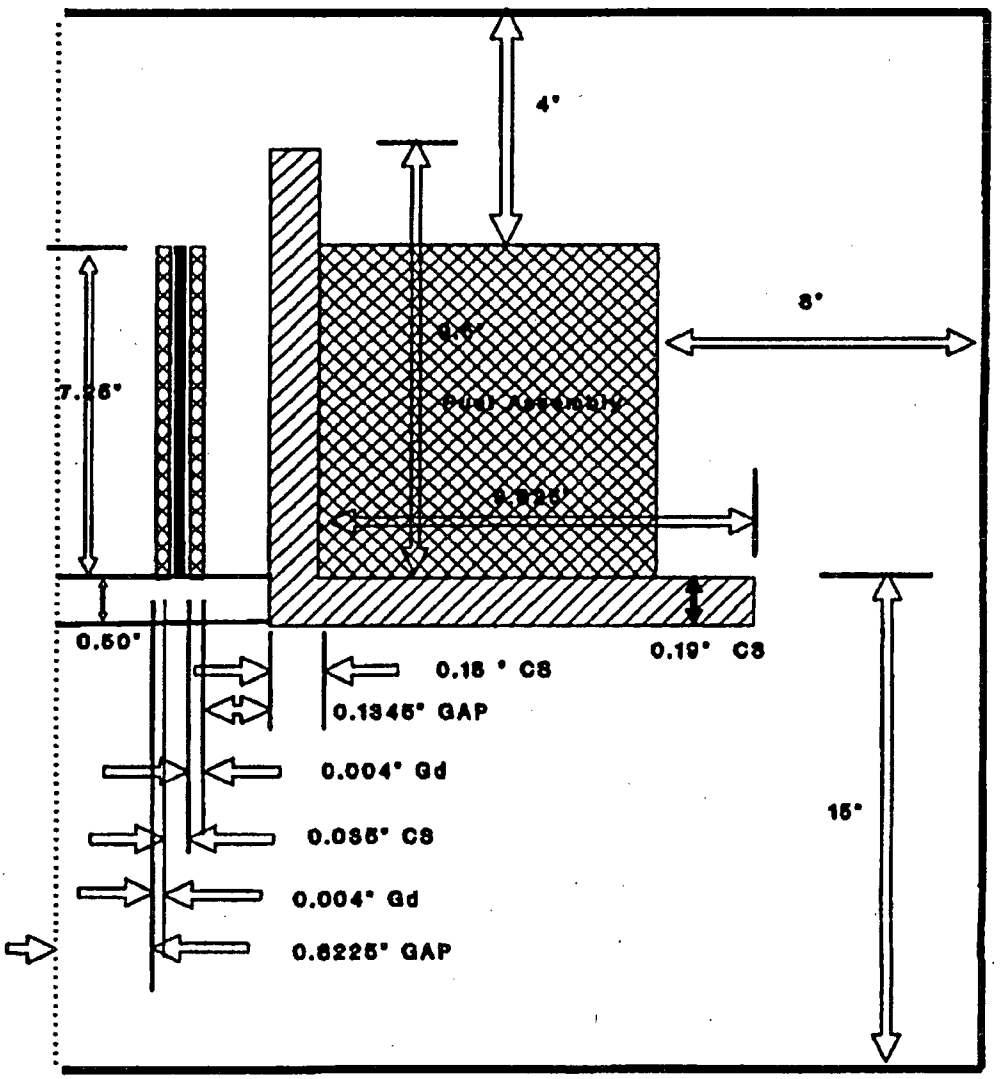


Figure 6-3-1 KENO Model of Fuel Assembly Within Container for Square Lattice Fuel

The results of the HAC evaluation for Type A assemblies is presented in Table 6-3-1. The KENO input deck which was used for the calculation is given in Table 6-3-2. All tables showing KENO input decks are to be found at the end of this appendix.

## ANALYSIS FOR TYPE B ASSEMBLIES

Type B fuel assemblies are those which have been shown in Appendix 6-2 to have an uncontained (single assembly surrounded by water) reactivity, including biases and 95/95 uncertainties, which is greater than 0.936. Type B assemblies include all 15x15 and 17x17 fuel assembly designs, which attributes described in Appendix 1-5. The 17x17 Optimized Fuel Assembly (OFA) was identified as the most reactive of the various Type B assemblies, hence it will be used for the Type B assembly container calculations presented herein.

Figure 6-3-1 shows the geometry of the HAC which is modeled in KENO. For the Type B assemblies, KENO is used to provide a conservative three-dimensional geometric representation of the fuel assembly and shipping container. The three dimensional calculations assume an active fuel stack height of 168 inches, which is conservative since the majority Type B assembly designs are considerably shorter than 168 inches. Reflection is used at the fuel axial centerline to minimize problem size and complexity. At the fuel assembly end, 5.08 inches of water reflector is modeled, followed by the thin container shell and a reflective boundary condition. This is a conservative model since the container structural material which exists in this area is replaced by pure water reflector and the spacing normally provided by the fuel rod plenum region (between 3 and 7 inches) is ignored.

As described in the introduction, reflective boundary conditions are used at the edges of the two crushed containers to preclude any neutron leakage from the array. Using these boundary conditions is conservative since an infinite array of crushed containers is simulated.

The KENO calculational model uses only two geometry units to model the fuel assembly. One unit describes a fuel rod cell, which contains an explicit geometric representation of a fuel pellet, gap, cladding, and surrounding water. The other unit describes the thimble tube cell, which has water both inside and outside of the tube. In modeling the fuel, the $UO_2$ atom density is calculated by assuming a $UO_2$ density that is 96.5% of theoretical (10.96 g/cc); pellet densities actually encountered typically range from 94.5% to 95.5% of theoretical. No pellet dishing fraction or chamfering is modeled, which conservatively increases the number of $^{235}U$ atoms by about 1.2% depending on the specific pellet type. No credit is taken for the presence of naturally occurring $^{234}U$ or $^{236}U$, nor is any credit taken for assembly structural material that does not extend the full length of the assembly (i.e., grips, top and bottom nozzle, etc.). These combined assumptions result in a very conservative model of a fuel assembly.

The shipping container material and structure which surrounds the fuel assembly is modeled in KENO using three geometric units. The strongback, which is the 0.18 inch thick, 90 degree angled, carbon steel structure to which the assembly is clamped, is modeled as two plates, a vertical plate and a horizontal plate. The permanently mounted Gadolinia absorber sheet (0.035 inch carbon steel sheet coated with $Gd_2O_3$ on both sides) is modeled as a single unit and positioned within the shipping container as shown in Figure 6-3-1.

| Table 6-3-1 Summary of KENO Calculational Results | | | | |
|---|---|---|---|---|
| **Assembly Type** | **Enrichment wt.%** | **Added Absorbers** | **KENO $K_{eff} \pm 1$** | **95/95 w/Bias** |
| Type A[1] | 5.00 | None | 0.90486 ± 0.00462 | 0.9204 |
| Type B[2] | 4.75 | None | 0.93449 ± 0.00426 | 0.9495 |
| | 5.00 | 32 IX IFBA | 0.92820 ± 0.00495 | 0.9455 |
| | 5.00 | 4 Pyrex BA | 0.92718 ± 0.00559 | 0.9442 |
| | 5.00 | 4 WABA | 0.92021 ± 0.00498 | 0.9363 |
| | 5.00 | 4 Ag-In-Cd | 0.92521 ± 0.00540 | 0.9420 |
| | 5.00 | Optional Gd Plates | 0.92602 ± 0.00517 | 0.9424 |
| Type C[3] | 4.80 | None | 0.92774 ± 0.00431 | 0.9428 |
| | 5.00 | 24 IX IFBA | 0.91739 ± 0.00474 | 0.9339 |
| | 5.00 | 4 WABA | 0.92180 ± 0.00576 | 0.9391 |
| | 5.00 | 4 Ag-In-Cd | 0.90730 ± 0.00517 | 0.9237 |
| | 5.00 | Gd Coated Guides | 0.90996 ± 0.00495 | 0.9260 |
| **Optimum Moderation Condition** | | | | |
| Type A | 5.00 | None | 0.77578 ± 0.00420 | 0.7907 |
| Type B | 5.00 | None | 0.79200 ± 0.00427 | 0.8070 |
| Type C | 5.00 | None | 0.79158 ± 0.00369 | 0.8057 |
| 17x17 STD[4] | 5.00 | None | 0.80429 ± 0.00382 | 0.8186 |
| Lumped Structure | 5.00 | None | 0.87092 ± 0.00343 | 0.8847 |
| **Fuel Pin Gap Flooding with Annular Fuel Blankets** | | | | |
| **Full Water Density Outside the Pins** | | | | |
| Type A[5] | 5.00 | None | 0.9080 ± 0.00241 | 0.9207 |
| Type B[6] | 4.85 | None | 0.9387 ± 0.0010 | 0.9475 |
| Type B[6] | 5.00 | Optional Gd Plates | 0.9223 ± 0.00105 | 0.9334 |
| Type B[7] | 4.65 | None | 0.9382 ± 0.00103 | 0.9494 |
| Type B[7] | 5.00 | Optional Gd Plates | 0.9335 ± 0.00103 | 0.9447 |
| Type C[9] | 4.80 | None | 0.9295 ± 0.00100 | 0.9383 |
| **Partial Water Density Outside the Pins** | | | | |
| Type A | 5.00 | None | 0.7482 ± 0.00140 | 0.7597 |
| Type B | 5.00 | None | 0.7697 ± 0.00165 | 0.7814 |
| 17STD | 5.00 | None | 0.7796 ± 0.00161 | 0.7913 |

| Table 6-3-1 (cont.) Summary of KENO Calculational Results | | | | |
|---|---|---|---|---|
| **Assembly Type** | **Enrichment wt.%** | **Added Absorbers** | **KENO $K_{eff} \pm 1$** | **95/95 w/Bias** |
| **Tightly Packed Fuel Rods** | | | | |
| 14x14 CE[8] | 5.00 | None | 0.71372 ± 0.00296 | 0.7268 |

Notes:

1. Type A assemblies include all 14x14 and 16x16 designs. Calculations were performed using the 14x14 OFA since this assembly is the most reactive of the Type A assemblies.
2. Type B assemblies include all 15x15 and 17x17 designs. Calculations were performed using the 17x17 OFA since this assembly is the most reactive of all Type B assemblies.
3. The Type C assembly is the VVER-1000 fuel assembly.
4. The 17x17 STD assembly was used for calculation since this design has the highest uranium loading of all A and B assembly types.
5. Annular fuel blankets consist of nominal 8.0 inches annular fuel at top and bottom of rods.
6. 168 Inch assembly (17x17 STD/XL) with annular pellet zone 10.25 inches top and bottom.
7. 144 Inch assembly (17x17 OFA) with annular pellet zone 8.0 inches top and bottom.
8. The calculation was performed using a 19x19 array of this type of fuel rod, which was shown to be the most reactive for a tightly packed lattice.
9. VVER-1000 fuel assembly with annular pellet zone 10 inches top and bottom.

With the top-crush accident assumed for the HAC, the fuel assemblies within the container are separated from the outer container shell by 4 inches at the top, 8 inches at the sides, 15 inches at the bottom, and 5.08 inches at the ends. Thus, when two containers are crushed top-to-top, the two assemblies in one container are separated from the two assemblies in the other container by eight inches of moderator. By applying reflective boundary conditions at the outer edges of the containers, an infinite array of HAC container of configurations is represented. The container shells are assumed to be in place, with adjacent container shells in contact with each other. To simplify the KENO model geometry, only half the shipping container is modeled with a reflective boundary condition used at the vertical centerline between the two assemblies in one cask.

The results of the HAC evaluation for Type B assemblies is presented in Table 6-3-1. The KENO input deck which was used for the calculation is given in Table 6-3-3.

## ADDITIONAL NEUTRON ABSORBERS

Additional neutron absorbers are utilized in higher enrichment Type B assemblies to maintain $K_{eff}$ less than the 0.95 criterion. Two different placements of absorbers are considered in this evaluation; within the fuel assembly and external to the fuel assembly. This evaluation determines the minimum number and required placement for each type of absorber. The Type B within-container fuel assembly model (developed in the previous section) is used here as a basis for the additional absorber evaluations. Using the most reactive Type B assembly to evaluate relative absorber worths is appropriate since the relative worth of each absorber rod would be approximately the same, regardless of assembly type.

For the within-assembly absorber evaluation, four different types of absorbers are considered: Integral Fuel Burnable Absorbers (IFBA), Pyrex Burnable Absorber clusters, Wet Annular Burnable Absorber (WABA) clusters, and Ag-In-Cd Absorber clusters. Each absorber type is described by a nominal density and manufacturing tolerance at the 95% confidence level. For calculational purposes, the modeled absorber number densities are reduced from nominal by a factor to account for the manufacturing tolerance, and by an extra 25% for added conservatism.

Each absorber was modeled assuming an axial length of 108 inches, centered about the assembly axial midplane. Typically, absorbers are significantly longer than the assumed 108 inch minimum, thereby adding more conservatism to the model.

## ABSORBER MODELING IN TYPE B ASSEMBLIES

Westinghouse IFBA with the $^{10}B$ uniformly smeared in the clad region of the fuel rod in all its nuclear models. This is done for consistency, and because the difference in reactivity is slight. However, for those applications where this could lead to non-conservative results, a bias is included to account for any difference in reactivity.

The modeling effect of boron is slight because, as used with IFBA, it is not a strong absorber. The main reason for this is that very little is used per rod, about 10% of the poison density in WABA, Pyrex, or a gadolinium rod. For the comparison to gadolinium, the absorption cross section is also smaller by at least another factor of ten.

Consequently, $^{10}B$ does not self-shield significantly as used in IFBA. The flux is reduced across its surface by only about 4%. Thus, it is a volume absorber and the configuration of its surface is relatively unimportant. The amount of absorption does not depend on the amount of surface area.

This contrasts with Gadolinium which self-shields strongly. It, therefore, absorbs neutrons primarily at its surface, so its configuration is vitally important. Any change in effective surface area, as would be introduced by nonuniformity, would reduce its strength. For IFBA, nonuniformities have no effect so long as the total amount present is not changed.

A sensitivity study was performed to confirm that the number of IFBA rods can be reduced if the individual rod $^{10}B$ loading is increased by an equal ratio. Westinghouse IFBA rods have a standard IFBA $^{10}B$ density for each rod, referred to as a 1X loading. IFBA rods can also be manufactured with increased $^{10}B$ loadings, to ratios of 1.5X and 2X. To maintain the same absorber loading on an assembly basis, only half as many 2X coated IFBA rods are required as 1X coated IFBA rods. For example, if the shipping container limit requires 32 IFBA rods per assembly at a 1X loading, the same $^{10}B$ loading is provided by 16 IFBA rods at a 2X loading, etc.

Several studies in HAMMER, XSDRNPM, KENO and PACER have shown that the worth of IFBA is about 3% (relative) higher when modeled in the cladding instead of as a coating on the pellet. This is attributed to the flux reduction and hardening in approaching the surface of the pellet. The effect of modeling in the cladding can be accounted for by taking a bias of 0.01 $\Delta K$ in reactivity, weighted by the fraction of coated rods in the assembly. For example, a 17 X 17 OFA assembly containing 32 IFBA rods would require a bias of 0.0012 $\Delta K$. Figure 6-3-2 shows the layout of 32 IFBA rods within an assembly.

The modeling of the Pyrex BA, WABA, and Ag-In-Cd cluster absorbers is essentially exact, and no bias to the final KENO result necessary. The cluster absorbers are inserted at the top of the assembly into the empty guide tubes. Westinghouse experience with these absorber types is extensive, since these absorber types are used in most Westinghouse commercial reactors.

Number densities for the elemental components of each absorber are provided in Chapter 6, Figure 6-8. The absorber number densities ($^{10}B$ for the Pyrex BA and WABA, and all materials for the Ag-In-Cd absorber) were reduced by the appropriate 95% confidence manufacturing tolerance. These number densities were further reduced by 25% to provide an additional factor of safety. Figures 6-3-3 through 6-3-5 show the within assembly absorber layouts for the Pyrex BA, WABA, and Ag-In-Cd within a guide tube.

The reactivity worth of individual absorber rods is fairly insensitive to position within the assembly. Therefore, the placement of cluster absorber rods is unimportant, with only the requirement that the rods be positioned symmetrically about the assembly center (to assure smooth flux control). For IFBA assemblies, the placement of IFBA rods within the assembly is limited to standard patterns based on assembly type and number of IFBA rods. Westinghouse uses standard patterns simply to reduce assembly complexity and assembly cost.

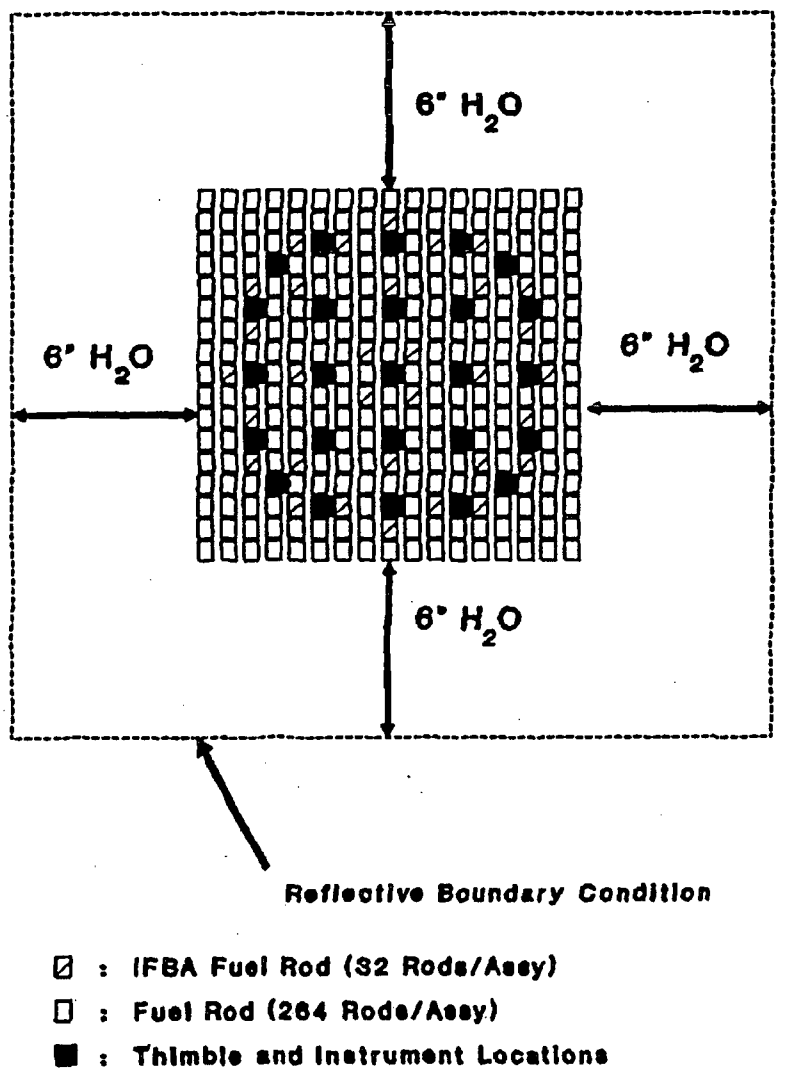


Figure 6-3-2 Layout for IFBA Within-Assembly Absorbers for Square Lattice Fuel

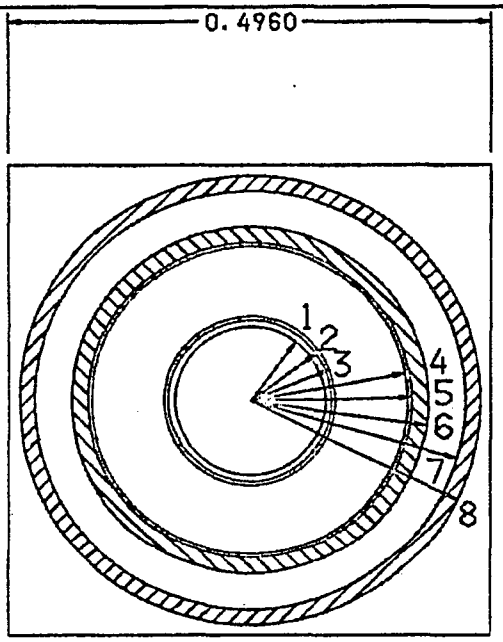


| ARROW NO. | NOMINAL RADIUS (IN.) | MATERIAL |
|---|---|---|
| 1. | 0.07825 | AIR |
| 2. | 0.08475 | STAINLESS STEEL (SS-304) |
| 3. | 0.08900 | AIR |
| 4. | 0.16200 | BOROSILICATE GLASS |
| 5. | 0.16600 | AIR |
| 6. | 0.18350 | STAINLESS STEEL (SS-304) |
| 7. | 0.22100 | WATER |
| 8. | 0.23700 | ZIRCALOY |

**Figure 6-3-3 Layout for Pyrex Within-Assembly Absorbers**

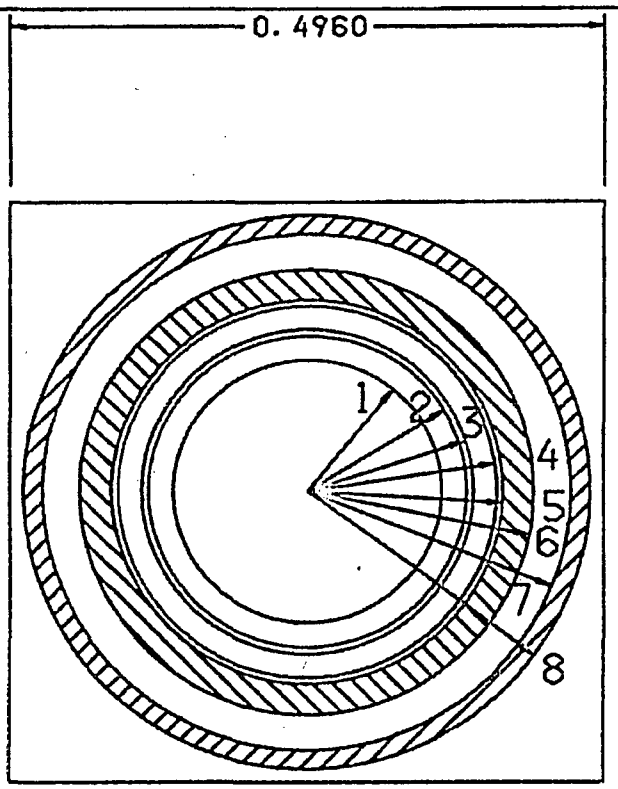


| ARROW NO. | NOMINAL RADIUS (IN.) | MATERIAL |
|---|---|---|
| 1. | 0.11250 | WATER |
| 2. | 0.13350 | ZIRCALOY |
| 3. | 0.13900 | HELIUM |
| 4. | 0.15900 | A1203-B4C |
| 5. | 0.16450 | HELIUM |
| 6. | 0.19050 | ZIRCALOY |
| 7. | 0.22100 | WATER |
| 8. | 0.23700 | ZIRCALOY |

**Figure 6-3-4 Layout for WABA Within-Assembly Absorbers**

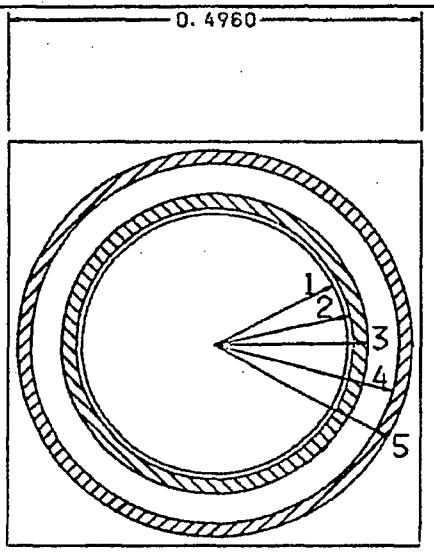


| ARROW NO. | NOMINAL RADIUS (IN.) | MATERIAL |
|---|---|---|
| 1. | 0.16450 | Ag-In-Cd |
| 2. | 0.16600 | AIR |
| 3. | 0.18350 | STAINLESS STEEL (SS-304) |
| 4. | 0.22100 | WATER |
| 5. | 0.23700 | ZIRCALOY |

**Figure 6-3-5 Layout for Ag-In-Cd Within-Assembly Absorbers**

One external assembly absorber was also evaluated. An additional $Gd_2O_3$ absorber plate, identical to the permanently mounted absorbers already in place in the container, was positioned directly underneath the strongback, centered within the assembly footprint. Unlike all the other Type B assembly evaluations, this calculation was performed in two dimensions, conservatively ignoring the benefits of axial leakage. Given the model's reflective boundary at the vertical centerline between the assemblies within the cask, this model actually represents a $Gd_2O_3$ coating under the strongback, beneath each assembly.

The results of the additional absorber evaluations for Type B assemblies is presented in Table 6-3-1. The KENO input decks which were used for the calculation are given in Tables 6-3-4 through 6-3-8.

## ANALYSIS FOR THE TYPE C ASSEMBLY

The Type C assembly is the VVER-1000 type fuel assembly shown in Appendix 6-2 to have an uncontained ( single assembly surrounded by water) reactivity, including biases and 95/95 uncertainties, of 0.9432.

Figure 6-3-6 shows the geometry of the HAC which is modeled in KENO. For the Type C assembly, KENO is used to provide a conservative three-dimensional geometric representation of the fuel assembly and shipping container. The three dimensional calculations assume an active fuel stack height of 142.91 inches. Reflection is used at the fuel axial centerline to minimize problem size and complexity. At the fuel assembly end, 6.0 inches of water reflector is modeled, followed by the thin container shell and a reflective boundary condition. This is a conservative model since the container structural material which exists in this area is replaced by pure water reflector and the spacing normally provided by the fuel rod plenum region is ignored.

As described in the introduction, reflective boundary conditions are used at the edges of the two crushed containers to preclude any neutron leakage from the array. Using these boundary conditions is conservative since an infinite array of crushed containers is simulated.

The KENO calculation model uses five geometry units. The first two units describe the top and bottom of a fuel rod cell. The next two units describe the top and bottom of a modified thimble tube cell. The thimble tube inner and outer diameters were reduced to fit correctly into the fuel assembly array model. This is a conservative modification since the amount of thimble tube material available for neutron absorption is reduced and the amount of water available for moderation is increased. The last unit is an empty water cell used to create a square assembly array in KENO. The fuel rod cells and thimble tube cells are positioned in an array to create a triangular pitch equal to the VVER-1000 fuel assembly. In modeling the fuel, the $UO_2$ atom density is calculated by assuming a $UO_2$ (corrected to 5.0 wt %) density that is 96.5% of theoretical (10.9547 gm/cc); pellet densities actually encountered typically range from 94.5% to 95.5% of theoretical. No pellet dishing fraction or chamfering is modeled, which conservatively increases the number of $^{235}U$ atoms by about 1.2%, depending on the specific pellet type. No credit is taken for the presence of naturally occurring $^{234}U$ or $^{236}U$, nor is any credit taken for assembly structural material that does not extend the full length of the assembly (i.e., grids, top and bottom nozzle, etc.). These combined assumptions result in a very conservative model of a fuel assembly.

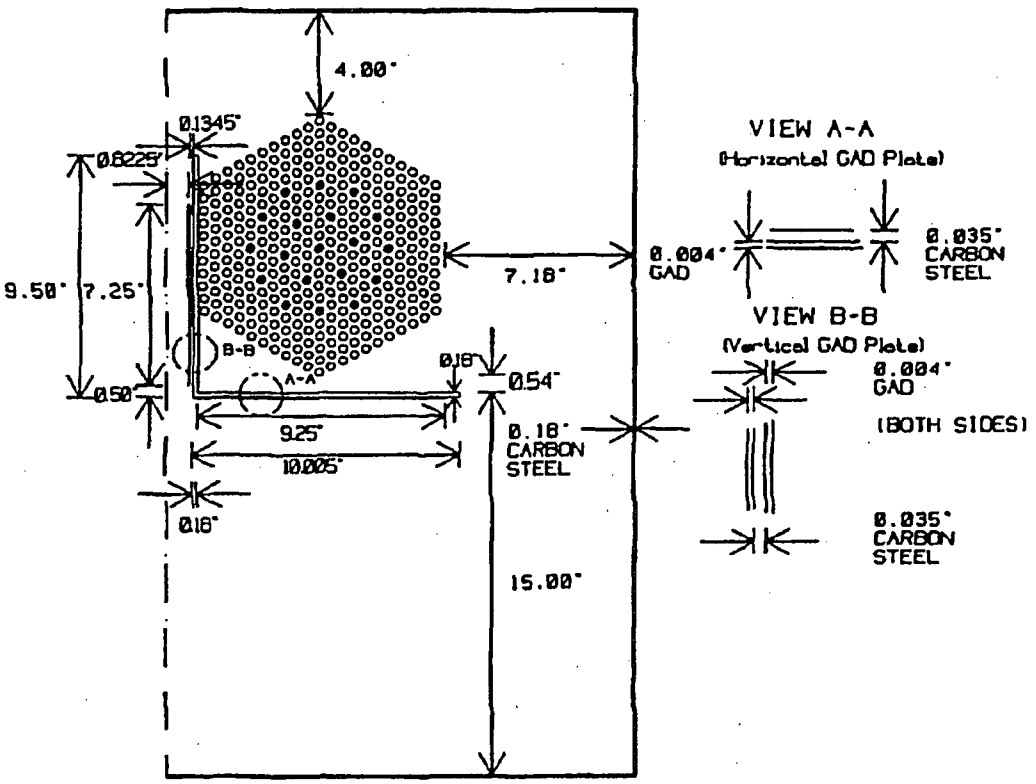


**Figure 6-3-6 Hypothetical Accident Condition Configuration and Model for VVER-1000 Assembly**

The shipping container material and structure which surrounds the fuel assembly is modeled in KENO using four geometric units. The strongback, which is the 0.18 inch thick, 90 degree angled, carbon steel structure to which the assembly is clamped, is modeled as two plates: a vertical plate and a horizontal plate. The permanently mounted vertical Gadolinium absorber sheet (0.035 inch carbon steel sheet coated with $Gd_2O_3$ on both sides) is modeled as a single unit and positioned with the shipping container as shown in Figure 6-3-6. The permanently mounted horizontal Gadolinia absorber sheet (0.035 inch carbon steel sheet coated with $Gd_2O_3$ on the underside) is modeled sections and positioned directly underneath the horizontal portion of the strongback as shown in Figure 6-3-6.

With the top-crush accident assumed for the HAC, the fuel assemblies within the container are separated from the outer container shell by 4 inches at the top, 7.18 inches at the sides, 15 inches at the bottom, and 6.0 inches at the ends. Thus, when two containers are crushed top-to-top, the two assemblies in one container are separated from the two assemblies in the other container by eight inches of moderator. By applying reflective boundary conditions at the outer edges of the containers, an infinite array of HAC container configurations is represented. The container shells are assumed to be in place, with adjacent container shells in contact with each other. To simplify the KENO model geometry only half the shipping container is modeled with a reflective boundary condition used at the vertical centerline between the two assemblies in one cask.

The results of the HAC evaluation for the Type C assembly is presented in Table 6-3-1. The KENO input deck which was used for the calculation is given in Table 6-3-9.

## ADDITIONAL HAC CALCULATION WITH WATER IN THE FUEL PIN GAP FOR THE TYPE C ASSEMBLY

A calculation was performed for the HAC with full density water modeled in the gap between the fuel pellet and cladding. The KENO model used for this calculation is identical to the optimum moderation KENO model shown in Figure 6-3-9 with full density water considered both in and surrounding the fuel pins. The calculation resulted in a $K_{eff}$ value of 0.9466, which includes biases and 95/95 uncertainties. This result shows that the $K_{eff} < 0.95$ limit is met, even under conditions of water in the fuel pin gap. The KENO input file which was used for this calculation is given in Table 6-3-17.

## ADDITIONAL NEUTRON ABSORBERS FOR THE TYPE C ASSEMBLY

Additional neutron absorbers are utilized in higher enrichment the Type C assembly to maintain $K_{eff}$ less than the 0.95 criteria. Two different absorbers are considered in this evaluation; within the fuel assembly and external to the fuel assembly. This evaluation determines the minimum number and required placement for each type of absorber. The Type C within-container fuel assembly model (developed in the previous section) is used here as a basis for the additional absorber evaluations.

For the within-assembly absorber evaluation, three different types of absorber is considered: Integral Fuel Burnable Absorbers (IFBA), WABA clusters, and Ag-In-Cd Absorber clusters. Each absorber type is described by a nominal density and manufacturing tolerance at the 95% confidence level. For calculational purposes, the modeled absorber number densities are reduced from nominal by a factor to account for the manufacturing tolerance, and by an extra 25% for added conservatism. Each absorber was modeled assuming an axial length of 108 inches, centered about the assembly axial midplane. Typically,

absorbers are significantly longer than the assumed 108 minimum, thereby adding conservatism to the model.

## ABSORBER MODELING IN THE TYPE C ASSEMBLY

Westinghouse models IFBA with the $^{10}B$ uniformly smeared in the clad region of the fuel rod in all its nuclear models. This is done for consistency, and because the difference in reactivity is slight. However, for those applications where this could lead to non-conservative results, a bias is included to account for any difference in reactivity.

The modeling effect of boron is slight because, as used with IFBA, it is not a strong absorber. The main reason for this is that very little is used per rod, about 10% of the poison density in WABA or a gadolinium rod. For the comparison to gadolinium, the absorption cross sections is also smaller by at least another factor of ten.

Consequently, $^{10}B$ does not self-shield significantly as used in IFBA. The flux is reduced across its surface by only about 4%. Thus, it is a volume absorber and the configuration of its surface is relatively unimportant. The amount of absorption does not depend on the amount of surface area.

This contrasts with Gadolinium which self-shields strongly. It, therefore absorbs neutrons primarily at its surface, so its configuration is vitally important. Any change in effective surface area, as would be introduced by nonuniformity, would reduce its strength. For IFBA, nonuniformities have no effect so long as the total amount present is not changed.

A sensitivity study was performed to confirm that the number of IFBA rods can be reduced if the individual rod $^{10}B$ loading is increased by an equal ratio. Westinghouse IFBA rods have a standard IFBA $^{10}B$ density for each rod, referred to as a 1X loading. IFBA rods can also be manufactured with increased $^{10}B$ loadings, to ratios of 1.5X and 2X. To maintain the same absorber loading on an assembly basis, only half as many 2X coated IFBA rods are required as 1X coated IFBA rods. For example, if the shipping container limit requires 24 IFBA rods per assembly at a 1X loading, the same $^{10}B$ loading is provided by 12 IFBA rods at a 2X loading, etc.

Several studies in HAMMER, XSDRNPM, KENO and PACER have shown that the worth of IFBA is about 3% (relative) higher when modeled in the cladding instead of as a coating of the pellet. This is attributed to the flux reduction and hardening in approaching the surface of the pellet. The effect of modeling in the cladding can be accounted for by taking a bias of 0.01 $\Delta K$ in reactivity, weighted by the fraction of coated rods in the assembly. For example, a VVER-1000 assembly containing 24 IFBA rods would require a bias of 0.0008. Figure 6-3-7 shows the layout of 24 IFBA rods within a VVER-1000 assembly.

The modeling for the WABA and Ag-In-Cd cluster absorbers is essentially exact, and no bias to the final KENO results is necessary. The cluster absorbers are inserted at the top of the assembly into the empty guide tubes. Westinghouse experience with these absorber types is extensive, since these absorber types are used in most Westinghouse commercial reactors.

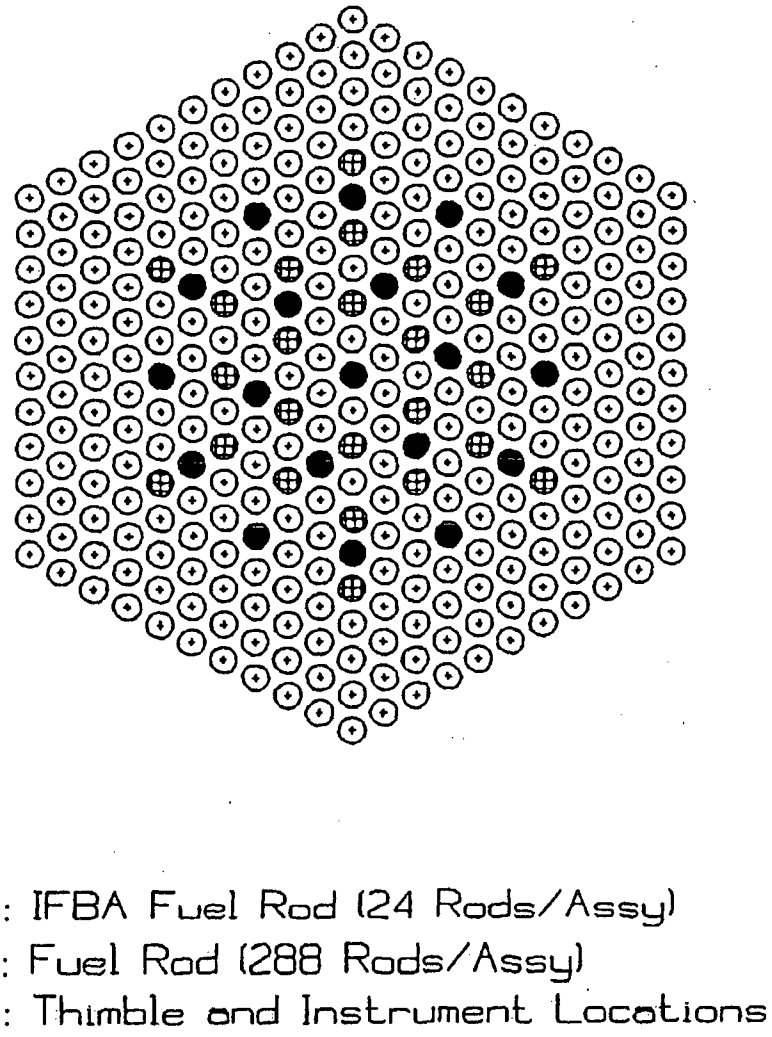


**Figure 6-3-7 Layout for IFBA Within-Assembly Absorbers for VVER-1000**

Number densities for the elemental components of each absorber are provided in Chapter 6, Figure 6-8. The absorber number densities ($^{10}B$ for the WABA and all materials for the Ag-In-Cd absorber) were reduced by the appropriate 95% confidence manufacturing tolerance. These number densities were further reduced by 25% to provide an additional factor of safety. Figures 6-3-4 and 6-3-5 show the within assembly absorber layout for the WABA and Ag-In-Cd with a guide tube.

The reactivity worth of individual absorber rods is fairly insensitive to position within the assembly. Therefore, the placement of cluster absorber rods is unimportant, with only the requirement that the rods be positioned symmetrically about the assembly center (to assure smoother flux control).

One external assembly absorber was also evaluated. An additional $Gd_2O_3$ absorber coating was added to the guide plates which are positioned between the horizontal strongback and the fuel assembly. The guided absorber plates are located between the container internals grid support blocks and below the fuel assembly. With this absorber in place, the horizontal gadolinium absorber was removed from the model. The guide plate is 0.060 inches of carbon steel thickness. The undersides of the guide plates are coated with a 0.027 gm/cm$^2$ layer of $Gd_2O_3$. Unlike all the other Type C assembly evaluations, this calculation was performed without modeling the entire fuel stack length. The guided absorber plates are conservatively modeled as 7.5 inches long followed by a 2.50 inch gap. Both ends of the model use reflective boundary conditions, conservatively ignoring the benefits of axial leakage. The model also approximates the slant of the guide plate absorbers using a series of stepped slabs. These slabs conservatively preserve the spacing between the guide plate and the assembly faces and the amount of guide plate material present. This is a conservative modeling approximation of the guide plates since there is more separation between the guide plate and assembly faces in the model and the positioning of the guide plate slabs is such that neutrons can leak from the assembly faces between the slabs (unlike the real system where the entire assembly face is exposed to the absorber). Finally, given the model's reflective boundary at the vertical centerline between the assemblies within the cask, this model actually represents a $Gd_2O_3$ coating underneath each assembly's guide plates.

The results of the additional absorber evaluations for the Type C assembly is presented in Table 6-3-1. The KENO input decks which were used for the calculations are given in Tables 6-3-10 through 6-3-13.

## OPTIMUM MODERATION

Even though results of actual HAC drop tests have demonstrated that the shipping containers remain essentially intact (thus providing only for ingress of full-density water), the problem has also been developed to investigate reactivity under the non-credible Optimum moderation conditions. For this evaluation, the most reactive Type A (14x14 OFA) and Type B (17x17 OFA) fuel assemblies are considered, as well as Type C (VVER-1000) and 17x17 STANDARD fuel assembly. The 17x17 STANDARD fuel assembly is considered because this assembly design has the highest uranium loading of all the assembly types described in Appendix 1-5, and under optimum moderation conditions, the assembly type with the most $^{235}U$ will produce the highest reactivity.

The KENO model of the shipping container used in this optimum moderation evaluation is a modified version of the model used to evaluate Type A, B, and C fuel assemblies under fully flooded conditions. For the optimum moderation evaluation, additional cask structure has been added to create a more realistic representation of the actual shipping container. Under fully flooded conditions, this additional

structure can be ignored because its effect on reactivity is negligible (the full density water which separates the assemblies in the HAC geometry is sufficient by itself to absorb most of the neutrons traveling between assemblies). However, under optimum moderation conditions, the neutron mean free path length becomes very long, increasing the neutronic coupling between fuel assemblies. In this environment, the presence of additional cask structure has a strong beneficial influence on cask reactivity, since the structure is a much better absorber than the low density water.

For the fully flooded evaluations, the KENO model which is employed considers only the strongback and shell structures, ignoring over 75% (by weight) of the existing cask structure. For the optimum moderation evaluations, a more realistic model is employed which considers not only the strongback and shell structure, but other major full length components and the clamping frames as well for the MCC-3 and MCC-4 casks. Clamping frames were not considered for the MCC-5 cask. The structure which is considered in these models still conservatively ignores more than 50% of the existing cask structure.

The additional structure which is added to the optimum moderation model is shown in Figure 6-3-8 for the Type A and B fuel assembly models and Figure 6-3-9 for the Type C assembly model. Cask structural drawing numbers are provided, from which each additional structural component is referenced. To keep the model as simple as possible, only major components are modeled. The model preserves the relative shapes and positions of these added components as much as possible, although some were combined and/or simplified to reduce complexity.

The optimum moderation model for Type A and B fuel assemblies is a 3D model which considers a representative 25 inch axial zone of the cask, with a single clamping frame centered within the zone. At the ends, reflecting boundary conditions are employed to preclude neutron leakage from the array. This simulates an infinitely long shipping container with a clamping frame every 25 inches. Figure 6-3-8 depicts this geometry layout. The optimum moderation model for the Type C fuel assembly is a 3D model identical to the full density moderation Type C fuel assembly model except for the additional cask structure as shown in Figure 6-3-9.

Beyond the addition of the extra cask structure, the model employed for the optimum moderation evaluation is based on the same assumptions used for the fully-flooded HAC evaluations of the Type A, B, and C assemblies. With the top-crush accident assumed for the HAC, the fuel assemblies within the container are separated from the outer container shell by 4 inches at the top, 8 inches at the sides, and 15 inches at the bottom. Thus, when two containers are crushed top-to-top, the two assemblies in one container are separated from the two assemblies in the other container by eight inches of moderator. By applying reflective boundary conditions at the outer edges of the containers, an infinite array of HAC configurations is represented. The container shells are assumed to be crushed into a square shape with adjacent container shells in contact with each other. This minimizes the overall distance between assemblies in adjacent containers, resulting in a conservative estimate of the HAC reactivity. With this geometry, the only area where optimum moderation water can exist is within each shipping container.

The infinite array geometry assumed in the model precludes any neutron leakage from the array. Under optimum moderation conditions, a fast neutron spectrum is present, unlike the thermal spectrum created by the strong moderation of full flooding. Fast neutrons have long mean free paths and are very susceptible to leakage from the array. Ignoring neutron leakage under optimum moderation conditions is extremely conservative.

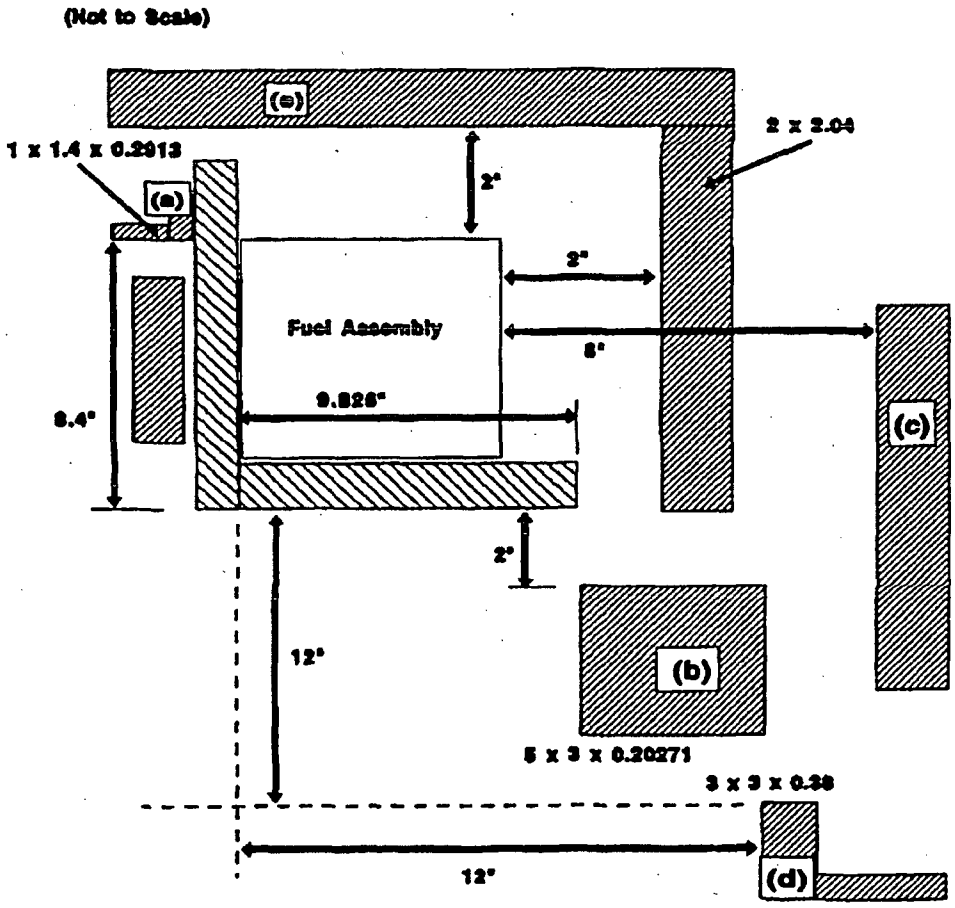


(a) Unistrut channel-rail
(b) Unistrut channel-side strongback skin – 4x3x.25 cradle angle
(c) 3x2x5/16 sealing flanges – 1.66x7.19x.19 shockmount angle
(d) 3x3x.38 skid mount flange
(e) Clampframe – pad – snubber bolt

**Figure 6-3-8 KENO Model of Square Lattice Assembly Within Container Utilized in Partial Moderation Evaluation**

(Not to Scale)

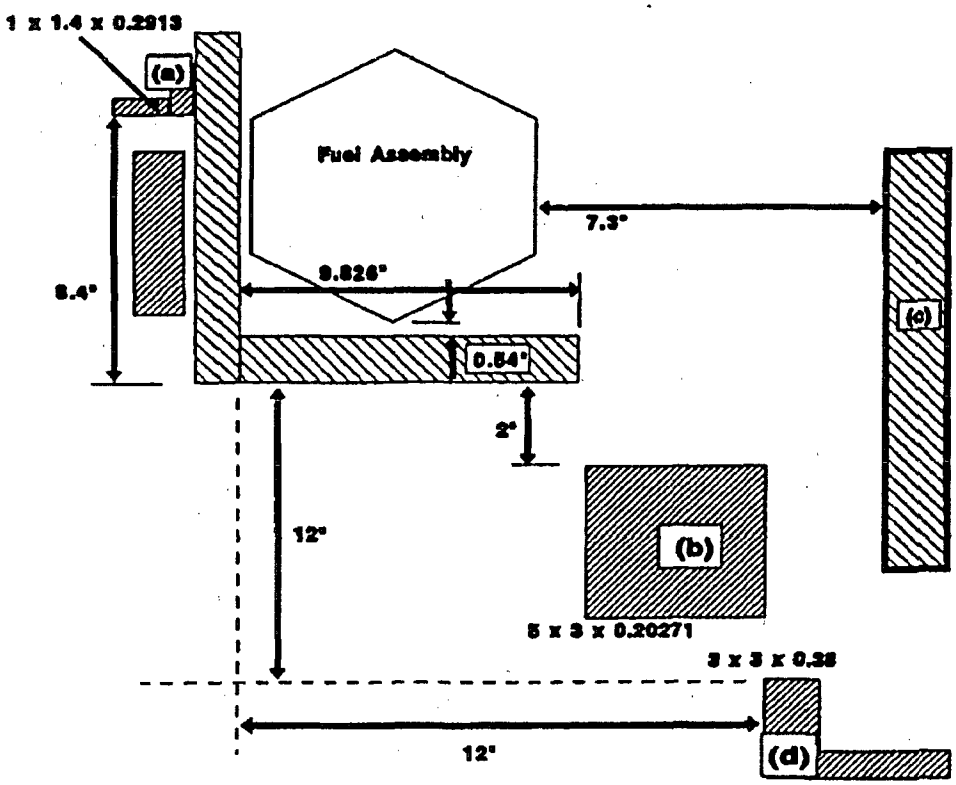


(a) Unistrut channel-rail
(b) Unistrut channel-side strongback skin - 4x3x.25 cradle angle
(c) 3x2x5/16 sealing flanges – 1.66x7.19x.19 shockmount angle
(d) 3x3x.38 skid mount flange

**Figure 6-3-9 KENO Model of VVER-1000 Assembly Within Container Utilized in Partial Moderation Evaluation**

The maximum reactivity results from each of the Type A, Type B, Type C and 17x17 STANDARD fuel assemblies under optimum moderation HAC conditions are presented in Table 6-3-1. The variation of reactivity with different optimum moderation water densities for each of the assembly types is shown in Figure 6-3-10. The KENO input deck which was used for the calculation is provided in Table 6-3-14. Note that significant margin exists to the optimum moderation $K_{eff}$ limit, even with the use of a very conservative shipping container model.

As a sensitivity study, an additional optimum moderation model was developed where all the additional cask structure added in the above models was lumped into one rectangular component and positioned as far from the fuel assemblies as possible. The geometry utilized for this case is depicted in Figure 6-3-11. The structure "lump" size was chosen to closely match the volume of steel added by the extra modeled structure, thereby preserving the same conservative 1924 pound weight assumed in the above optimum moderation calculations. The KENO input deck used for this calculation is provided in Table 6-3-15. The resultant $K_{eff}$ of this model is given in Table 6-3-1. The result shows that while the relative position of the added structure is indeed important, the $K_{eff}$ limit is still satisfied even when the additional structure is lumped and conservatively positioned to minimize interference with neutron interaction.

## FUEL PIN GAP FLOODING WITH ANNULAR FUEL BLANKETS

This section considers the effect of flooding inside a fuel pin with full density water and outside the pins with full and partial density water. Included in the analysis are annular pellet zones at the top and bottom of each assembly, in lengths of 8.0, 10.00, and 10.25 inches depending on fuel assembly type. All fuel is enriched to 5.0 w/o $^{235}U$ with exception of VVER-1000 fuel that is enriched to 4.8 w/o $^{235}U$. The most reactive Type A (14x14 OFA) , Type B (17x17 OFA), and TYPE C (VVER-1000) fuel assemblies were considered, as well as the 17x17 STANDARD (STD) and 17x17 STD/XL fuel assemblies. The 17x17 STD fuel is considered under partial water density flooding since this assembly design has the highest uranium loading of all the assembly types described in Appendix 1-5; under optimum moderation conditions, the assembly type with the most $^{235}U$ will produce the highest reactivity. The KENO model of the shipping container used in the fuel pin gap flooding cases, with annular fuel zones top and bottom, is a modified version of the model used to evaluate fuel assemblies under optimum moderation conditions. For the fuel pin gap flooding evaluation, three-dimensional features were used to model the entire fuel stack length, including annular pellet zones.

The fuel pin gap flooding model considered for Type A, B, and C fuel assemblies is a 3D model which considers half the length of the shipping container with a reflective boundary condition at the mid-plane. Seven clamping arms are modeled symmetrically about the shipping container mid-plane. This approximation will have little effect on the overall reactivity of the model since the clamping arms are very small (2 inches) relative to the arm center-to-center spacing (25 inches). Additional steel components are also modeled here as in the optimum moderation cases. A Type B 168-inch length assembly is also modeled symmetrically with nine clamping arms.

Results are shown in Table 6-3-1 for water flooding at full density in both the fuel pin gap and annular fuel blanket annulus. These results show that the $K_{eff}$ limit is met for both Type A, B and C fuel assemblies under conditions of full density water flooding in the fuel pin gap and annulus and outside the pins. Input decks for the Type A, B and C fuel assembly models are listed in Tables 6-3-18, 6-3-19, and 6-3-28.

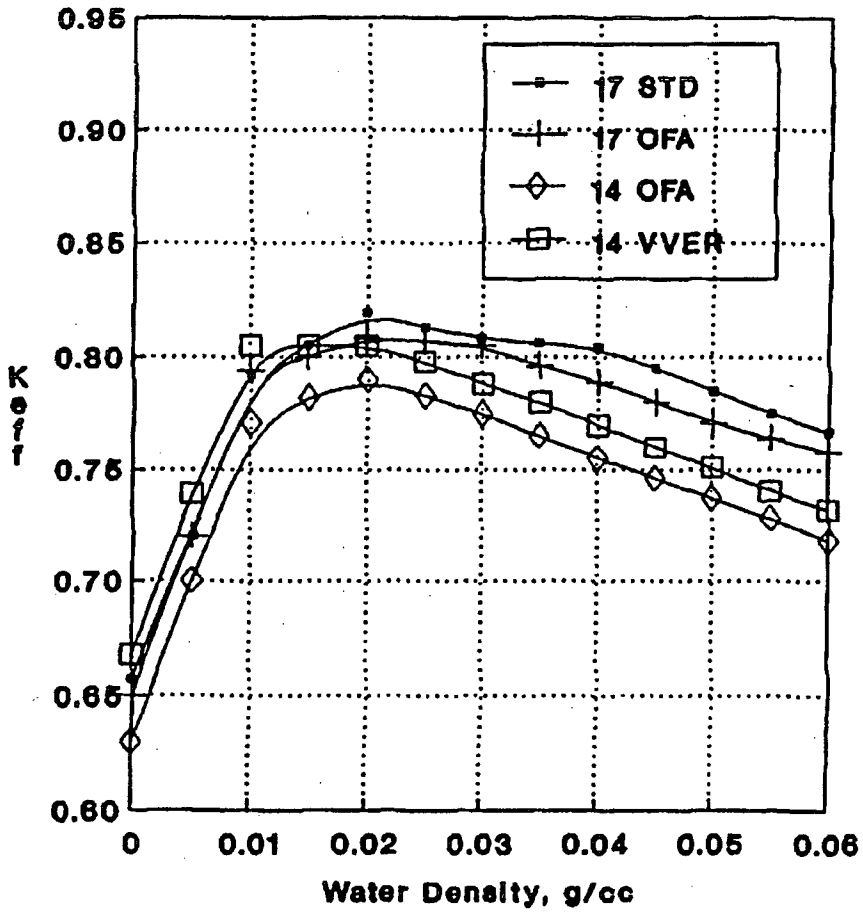


Figure 6-3-10 Reactivity Versus Optimum Moderation Density MCC Optimum Moderation Reactivity vs. Moderator Density

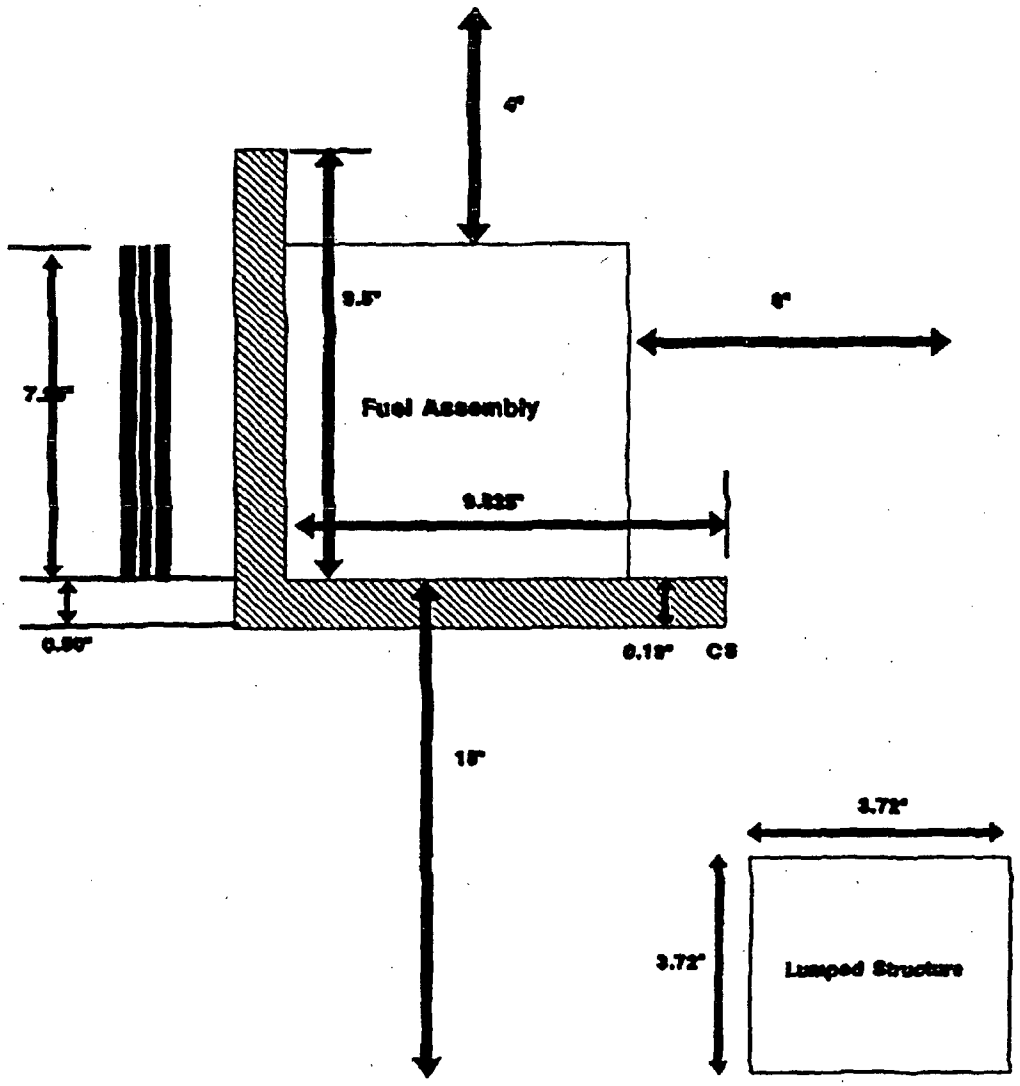


Figure 6-3-11 KENO Model of Fuel Assembly Within Container Utilized in Optimum Moderation Evaluation for Lumped Structure Sensitivity

Results are shown in Figure 6-3-13 for water flooding at partial densities to determine the peak reactivity. The peak $K_{eff}$ is listed in Table 6-3-2. The fuel pin gap and annulus remain flooded with full density water. Results for both Type A, B, and 17STD fuel assemblies show a $K_{eff}$ much less than 0.95 for conditions of full water density flooding in the fuel pin gap and annulus and partial water density flooding outside the pins. Input decks for the Type A, B, and 17STD fuel assembly models are listed in Tables 6-3-20, 6-3-21, and 6-3-22, respectively.

For Type B fuel assemblies in containers without the optional gadolinia plate, under conditions of full density water flooding in the pin gap, annulus, and outside the annulus, the enrichment must be reduced to 4.65 wt % to satisfy the <0.95 $K_{eff}$ criterion.

Additional calculations are included to support 10.25 inch nominal (10.75 inch maximum) annular pellet lengths top and bottom for the 17x17 STD/XL assembly and 8.0 inch nominal (8.5 inch worst case) for the 17OFA. $K_{eff}$ results are given for different shipping container configurations. See Table 6-3-1. In all cases, the 95/95 $K_{eff}$ is less than 0.95.

## SHIPMENT OF LOOSE FUEL RODS

The shipment of extra fuel rods (which are not part of an assembly structure) is frequently required to facilitate on-site assembly repairs. When these rods are shipped, they are placed into a metal box approximately the same size as an intact assembly. This box is then clamped into the shipping container in the same position as an assembly. The fuel rods within the box are held together in a tight array to prevent damage.

The layout for the tight-packed fuel rod evaluation is shown in Figure 6-3-12. XSDRNPMS was used to determine the reactivity of each of the different fuel rods which make up the various assembly types described in Appendix 1-5. The model considers a single fuel rod, with a small radius of water surrounding it. The amount of water placed in the outer cylindrical ring is the same as the amount of water which would be present in a tightly packed (clad-to-clad), square-pitched array of fuel rods. Using the amount of water available from a square pitched array versus the triangular pitched array is conservative, since the square pitched array offers slightly more water, and in a tight packed configuration, the fuel rods are severely undermoderated.

Results of the XSDRNPMS calculations for each fuel rod are presented in Table 6-3-1. From the results, it can be seen that the 14 X 14 CE1 type fuel rod is the most reactive under tightly packed conditions. Therefore, this rod type was used in the KENO model of tightly packed fuel rods.

A KENO model was prepared which represents a 19 X 19 array of fuel rods positioned within the shipping container in the same location that a normal intact fuel assembly would be placed. The fuel rod array used 14 X 14 CE1 type fuel rods, positioned in a square pitch configuration with the outer cladding of each rod touching its nearest neighbors. The array and container were modeled in two dimensions, conservatively ignoring the benefits of axial leakage.

The results of this packed fuel rod calculation are presented in Table 6-3-1. The KENO input deck which was used for the calculation is shown in Table 6-3-16.

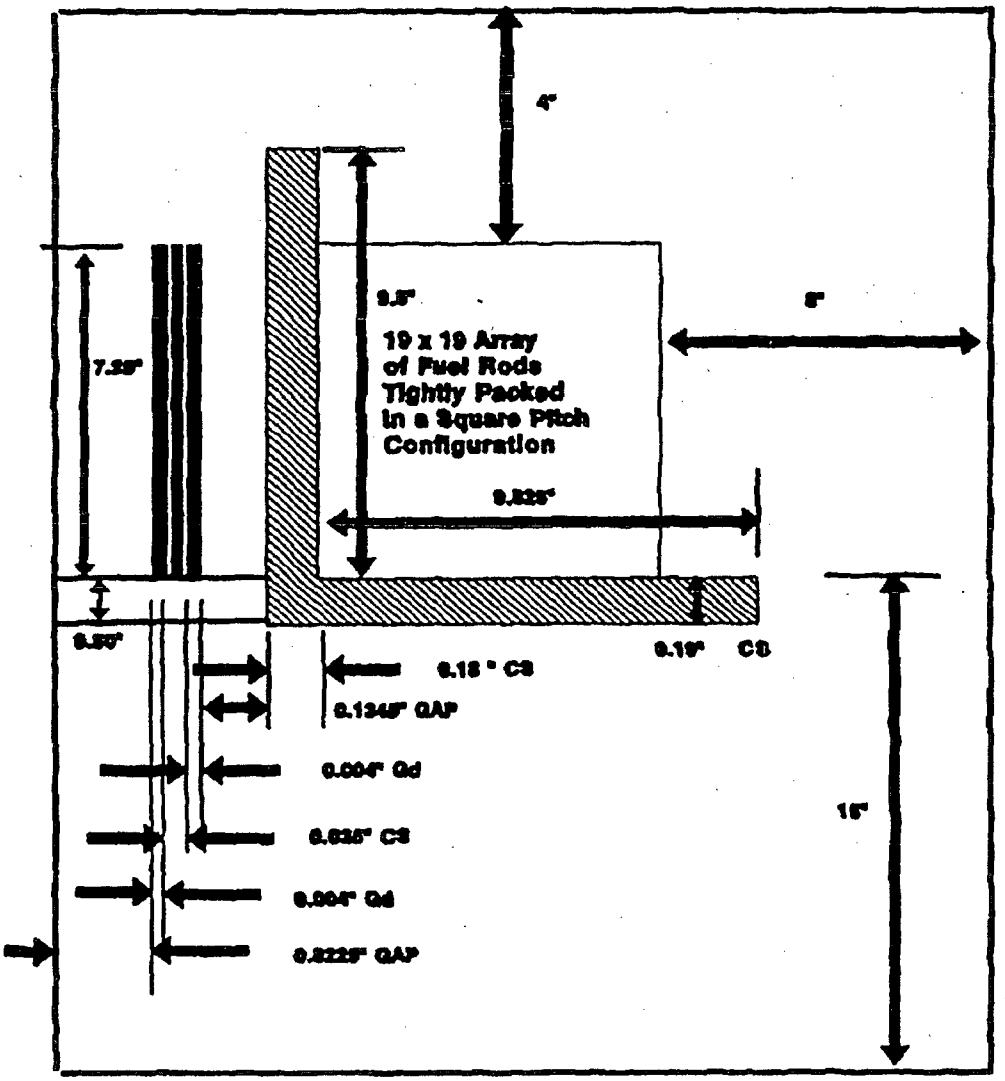


Figure 6-3-12 Layout for Tight Packed Fuel Rod Evaluation

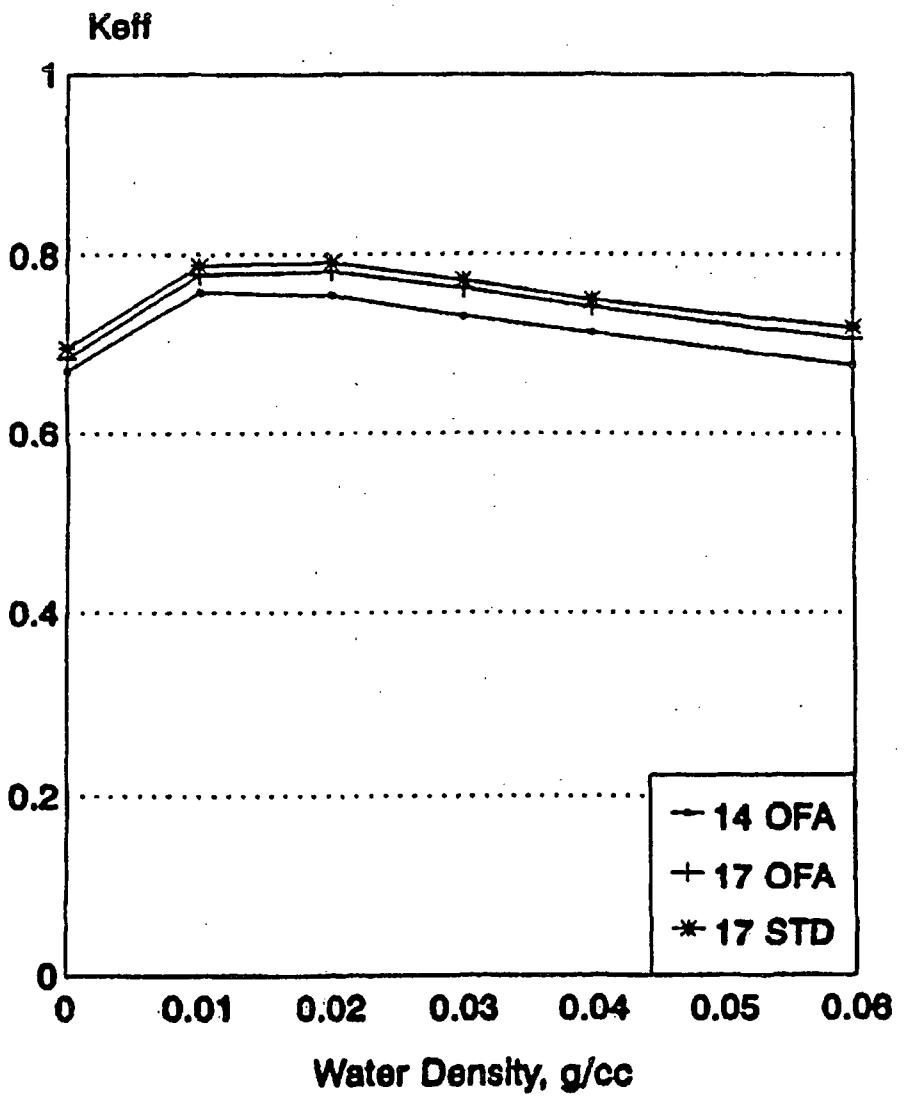


Figure 6-3-13 Reactivity vs. Optimum Moderation Density Full Density Water in Fuel Pin Gap

## SUMMARY OF RESULTS AND LIMITS

For the MCC shipping container using permanent $Gd_2O_3$ absorber plates, under infinite array Hypothetical Accident Conditions, it has been calculated that the final $K_{eff}$ with bias and uncertainties at the 95% confidence level is less than 0.95 for the following conditions:

1. Type A fuel assemblies (14x14 and 16x16 designs) with maximum enrichments up to 5.0 wt%; or,

2. Type B fuel assemblies (15x15 and 17x17 designs) with maximum enrichments up to 4.75 wt%; or,

3. Type B fuel assemblies (15x15 and 17x17 designs) with maximum enrichments above 4.75 wt%, up to 5.0 wt%, using one of the following additional absorber options.

   a. Assembly IFBA rods: A minimum of 32 nominally (1X) coated fuel rods are required in each assembly, each with a minimum coating length of 108 inches. With increased IFBA loading (1.5X, 2X, etc.), the number of loaded fuel rods required can be reduced by the ration of the increased loading to the nominal loading.

   b. Assembly Absorber Rods: A minimum of 4 absorber rods are required in each assembly. The rods can be Pyrex BA, WABA, or Ag-In-Cd designs with a minimum length of 108 inches. The rods must be positioned within the assemblies in a symmetric pattern about the assembly center guide tube.

   c. Container Absorber Plates: A minimum of two Gadolinia coated absorber plates, having the same specifications as the permanent container absorber plate, are required. The additional plates are to be positioned on the strongback (top or bottom), underneath each assembly.

4. The Type C fuel assembly with maximum enrichments up to 4.8 wt %; or,

5. The Type C fuel assembly with maximum enrichment above 4.8 wt %, up to 5.0 wt % using one of the following additional absorber options:

   a. Assembly IFBA rods: a minimum of 24 nominally (1X) coated fuel rods are required in each assembly, each with a minimum coating length of 108 inches.

      With increased IFBA loading (1.5X, 2X, etc.), the number of loaded fuel rods can be reduced by the ratio of the increased loading to the nominal loading.

   b. Assembly Absorber Rods: a minimum of 4 absorber rods are required in each assembly. The rods can be WABA or Ag-In-Cd designs with a minimum length of 108 inches. The rods must be positioned within the assemblies in a symmetric pattern about the assembly center guide tube.

c. Guide Plate Absorber Coating: a minimum coating of 0.027 gms $Gd^2O^3/cm^2$ on the underside of the guide plates is required. The guide plates sit on the strongback and are located between the grid supports.

Table 6-3-1 presents the calculational results from KENO for each of the above limits.

**Table 6-3-2 Listing of KENO Input for Type A Assembly**

```
TITLE-CASK WITH 14X14 OFA 5.00 W/O ASSEMBLY

READ PARAMETERS
  TME=6.0   RUN=YES   PLT=YES
  GEN=900   NPG=300   NSK=005   LIB=41
  XS1=YES   NUB=YES
END PARAMETERS

READ MIXT  SCT=2
MIX= 1
'  UO2 PELLET 5.00 W/O (96.5% TD, 0% DISH)
          1292235     0.0011942
          1292238     0.022404
            18016     0.047196
MIX= 2
'  ZIRC FUEL ROD CLADDING
           240302     0.043326
MIX= 3
'  H2O AT 1.00 G/CC
            31001     0.066854
            38016     0.033427
MIX= 4
'  CARBON STEEL FOR STRONGBACK & SHELL
            36012     4.728898E-4
           315031     5.807008E-5
           316032     6.642906E-5
           325055     3.877064E-4
           326000     8.420119E-2
MIX= 5
'  GADOLINIA OXIDE ABSORBER (0.02 GM GD2O3/CM2 @ 0.01016 CM THICKNESS)
            48016     9.810529E-3
           464152     1.308071E-5
           464154     1.373474E-4
           464155     9.679722E-4
           464156     1.347313E-3
           464157     1.026835E-3
           464158     1.622008E-3
           464160     1.425792E-3
MIX= 6
'  CARBON STEEL SHEET FOR GD ABSORBER
            56012     4.728898E-4
           515031     5.807008E-5
           516032     6.642906E-5
           525055     3.877064E-4
           526000     8.420119E-2
END MIXT

READ GEOMETRY
UNIT 1
COM=" 14X14 OFA FUEL ROD  "
CYLINDER    1  1    0.437388  30.0  0.0
CYLINDER    0  1    0.44628   30.0  0.0
CYLINDER    2  1    0.50800   30.0  0.0
CUBOID      3  1  4P0.70612   30.0  0.0
UNIT 2
COM=" 14X14 OFA GUIDE TUBE "
CYLINDER    3  1    0.62484   30.0  0.0
CYLINDER    2  1    0.66802   30.0  0.0
CUBOID      3  1  4P0.70612   30.0  0.0
```

**Table 6-3-2 Listing of KENO Input for Type A Assembly (cont.)**

```
UNIT 3
COM=" 14X14 OFA INSTRUMENT TUBE "
CYLINDER    3  1    0.44704   30.0  0.0
CYLINDER    2  1    0.50673   30.0  0.0
CUBOID      3  1  4P0.70612   30.0  0.0
UNIT 4
COM=" BOTTOM EDGE OF CS STRONGBACK "
CUBOID      4  1   24.95550   0.0       0.0      -0.45720  30.0  0.0
UNIT 5
COM=" VERTICAL EDGE OF CS STRONGBACK "
CUBOID      4  1    0.0      -0.45720  24.13000  -0.45720  30.0  0.0
UNIT 6
COM=" GADOLINIA ABSORBER PANEL "
CUBOID      6  1    0.04445  -0.04445  18.41500   0.0      30.0  0.0
CUBOID      5  1    0.05461  -0.05461  18.41500   0.0      30.0  0.0
GLOBAL
UNIT 7
COM=" 14X14 OFA ASSEMBLY IN CASK "
ARRAY 1   0.0       0.0       0.0
REPLICATE   3  1   20.32000   2.99720  10.16000  38.10000   0.0  0.0  1
HOLE 4    0.0       0.0       0.0
HOLE 5    0.0       0.0       0.0
HOLE 6   -0.85344   0.81280   0.0
REPLICATE   4  1    0.22606   0.0       0.22606   0.22606   0.0  0.0  1
END GEOM

READ ARRAY
ARA=1 NUX=14 NUY=14 NUZ=1 COM=" 14x14 OFA ASSEMBLY "
LOOP
 1   1  14   1     1  14   1     1   1   1
 2   3  12   3     3  12   9     1   1   1
 2   3  12   9     6   9   3     1   1   1
 2   5  10   5     5  10   5     1   1   1
 3   7   7   1     8   8   1     1   1   1
END LOOP
END ARRAY

READ BOUNDS
ALL=SPECULAR
END BOUNDS

READ PLOT
  TTL='BOX SLICE THROUGH CASK MODEL '
  PIC=BOX
  NCH='0.GIHVA*'
  XUL= -2.99720 YUL= 30.15742 ZUL= 15.0
  XLR= 40.31742 YLR=-38.32606 ZLR= 15.0
  UAX=1.0    VDN=-1.0   NAX=130
END
  TTL='MAT SLICE THROUGH CASK MODEL '
  PIC=MAT
  NCH='0.ZWSGS'
  XUL= -2.99720 YUL= 30.15742 ZUL= 15.0
  XLR= 40.31742 YLR=-38.32606 ZLR= 15.0
  UAX=1.0    VDN=-1.0   NAX=130
END PLOT
END DATA
```

**Table 6-3-3 Listing of KENO Input for Type B Assembly**

```
TITLE-3D CASK WITH 17X17 OFA 4.75 W/O ASSEMBLY

READ PARAMETERS
  TME=9.0    RUN=YES    PLT=YES
  GEN=900    NPG=300    NSK=005    LIB=41
  XS1=YES    NUB=YES
END PARAMETERS

READ MIXT  SCT=2
MIX= 1
'  UO2 PELLET 4.75 W/O (96.5% TD, 0% DISH)
          1492235      0.0011345
          1492238      0.022463
            18016      0.047195
MIX= 2
'  ZIRC FUEL ROD CLADDING
           240302      0.043326
MIX= 3
'  H2O AT 1.00 G/CC
            31001      0.066854
            38016      0.033427
MIX= 4
'  CARBON STEEL FOR STRONGBACK & SHELL
            36012      4.728898E-4
           315031      5.807008E-5
           316032      6.642906E-5
           325055      3.877064E-4
           326000      8.420119E-2
MIX= 5
'  GADOLINIA OXIDE ABSORBER (0.02 GM GD2O3/CM2 @ 0.01016 CM THICKNESS)
            48016      9.810529E-3
           464152      1.308071E-5
           464154      1.373474E-4
           464155      9.679722E-4
           464156      1.347313E-3
           464157      1.026835E-3
           464158      1.622008E-3
           464160      1.425792E-3
MIX= 6
'  CARBON STEEL SHEET FOR GD ABSORBER
            56012      4.728898E-4
           515031      5.807008E-5
           516032      6.642906E-5
           525055      3.877064E-4
           526000      8.420119E-2
END MIXT

READ GEOMETRY
UNIT 1
COM=" 17X17 OFA FUEL ROD "
CYLINDER    1  1     0.392176  213.36  0.0
CYLINDER    0  1     0.40005   213.36  0.0
CYLINDER    2  1     0.45720   213.36  0.0
CUBOID      3  1   4P0.62992   213.36  0.0
UNIT 2
COM=" 17X17 OFA GUIDE TUBE & INSTRUMENT TUBE "
CYLINDER    3  1     0.56134   213.36  0.0
CYLINDER    2  1     0.60198   213.36  0.0
CUBOID      3  1   4P0.62992   213.36  0.0
```

**Table 6-3-3 Listing of KENO Input for Type B Assembly (cont.)**

```
UNIT 3
COM=" BOTTOM EDGE OF CS STRONGBACK "
CUBOID      4  1   24.95550   0.0       0.0       -0.45720  213.36  0.0
UNIT 4
COM=" VERTICAL EDGE OF CS STRONGBACK "
CUBOID      4  1    0.0      -0.45720  24.13000  -0.45720  213.36  0.0
UNIT 5
COM=" GADOLINIA ABSORBER PANEL "
CUBOID      6  1    0.04445  -0.04445  18.41500   0.0      213.36  0.0
CUBOID      5  1    0.05461  -0.05461  18.41500   0.0      213.36  0.0
GLOBAL
UNIT 6
COM=" 17X17 OFA ASSEMBLY IN CASK "
ARRAY 1   0.0        0.0       0.0
REPLICATE   3  1   20.32000   2.99720  10.16000  38.10000  12.9032  0.0 1
HOLE 3    0.0        0.0       0.0
HOLE 4    0.0        0.0       0.0
HOLE 5   -0.85344    0.81280   0.0
REPLICATE   4  1    0.22606   0.0       0.22606   0.22606  0.22606  0.0 1
END GEOM

READ ARRAY
ARA=1 NUX=17 NUY=17 NUZ=1 COM=" 17X17 OFA ASSEMBLY "
LOOP
 1   1  17   1     1  17   1     1   1   1
 2   3  15   3     6  12   3     1   1   1
 2   4  14  10     4  14  10     1   1   1
 2   6  12   3     3  15  12     1   1   1
END LOOP
END ARRAY
READ BOUNDS
ALL=SPECULAR
END BOUNDS
READ PLOT
  TTL='BOX SLICE THROUGH CASK MODEL '
  PIC=BOX
  NCH='0.GHVA*'
  XUL= -2.99720 YUL= 31.80334 ZUL= 15.0
  XLR= 41.96334 YLR=-38.32606 ZLR= 15.0
  UAX=1.0    VDN=-1.0   NAX=130
END
  TTL='MAT SLICE THROUGH CASK MODEL '
  PIC=MAT
  NCH='0.ZWSGS'
  XUL= -2.99720 YUL= 31.80334 ZUL= 15.0
  XLR= 41.96334 YLR=-38.32606 ZLR= 15.0
  UAX=1.0    VDN=-1.0   NAX=130
END PLOT
END DATA
```

**Table 6-3-4 Listing of KENO Input for Type B Assembly With Additional IFBA Absorbers**

```
TITLE-CASK WITH 17X17 OFA 5.00 W/O ASSEMBLY - 32 IFBA

READ PARAMETERS
  TME=6.0    RUN=YES    PLT=YES
  GEN=900    NPG=300    NSK=005    LIB=41
  XS1=YES    NUB=YES
END PARAMETERS

READ MIXT  SCT=2
MIX= 1
'  UO2 PELLET 5.00 W/O (96.5% TD, 0% DISH, NOBA)
          1292235      0.0011942
          1292238      0.022404
            18016      0.047196
MIX= 2
'  ZIRC FUEL ROD CLADDING (NOBA)
           240302      0.043326
MIX= 3
'  H2O AT 1.00 G/CC (NOBA)
            31001      0.066854
            38016      0.033427
MIX= 4
'  UO2 PELLET 5.00 W/O (96.5% TD, 0% DISH, IFBA ROD)
          6292235      0.0011942
          6292238      0.022404
            68016      0.047196
MIX= 5
'  ZIRC FUEL ROD CLADDING (IFBA ROD, B10*0.95*0.75)
           740302      0.043326
           75010       0.0001644
MIX= 6
'  H2O AT 1.00 G/CC (IFBA ROD)
            81001      0.066854
            88016      0.033427
MIX= 7
'  CARBON STEEL FOR STRONGBACK & SHELL
            36012      4.728898E-4
           315031      5.807008E-5
           316032      6.642906E-5
           325055      3.877064E-4
           326000      8.420119E-2
MIX= 8
'  GADOLINIA OXIDE ABSORBER (0.02 GM GD2O3/CM2 @ 0.01016 CM THICKNESS)
            48016      9.810529E-3
           464152      1.308071E-5
           464154      1.373474E-4
           464155      9.679722E-4
           464156      1.347313E-3
           464157      1.026835E-3
           464158      1.622008E-3
           464160      1.425792E-3
MIX= 9
'  CARBON STEEL SHEET FOR GD ABSORBER
            56012      4.728898E-4
           515031      5.807008E-5
           516032      6.642906E-5
           525055      3.877064E-4
           526000      8.420119E-2
END MIXT
```

**Table 6-3-4 Listing of KENO Input for Type B Assembly With Additional IFBA Absorbers (cont.)**

```
READ GEOMETRY
UNIT 1
COM=" 17X17 OFA FUEL ROD (NOBA) "
CYLINDER    1  1    0.392176  137.16  0.0
CYLINDER    0  1    0.40005   137.16  0.0
CYLINDER    2  1    0.45720   137.16  0.0
CUBOID      3  1  4P0.62992   137.16  0.0
UNIT 2
COM=" 17X17 OFA FUEL ROD (IFBA) "
CYLINDER    4  1    0.392176  137.16  0.0
CYLINDER    0  1    0.40005   137.16  0.0
CYLINDER    5  1    0.45720   137.16  0.0
CUBOID      6  1  4P0.62992   137.16  0.0
UNIT 3
COM=" 17X17 OFA GUIDE TUBE & INSTRUMENT TUBE "
CYLINDER    3  1    0.56134    137.16  0.0
CYLINDER    2  1    0.60198    137.16  0.0
CUBOID      3  1  4P0.62992    137.16  0.0
UNIT 4
COM=" 17X17 OFA FUEL ROD (NOBA) "
CYLINDER    1  1    0.392176   76.20  0.0
CYLINDER    0  1    0.40005    76.20  0.0
CYLINDER    2  1    0.45720    76.20  0.0
CUBOID      3  1  4P0.62992    76.20  0.0
UNIT 5
COM=" 17X17 OFA GUIDE TUBE & INSTRUMENT TUBE "
CYLINDER    3  1    0.56134     76.20  0.0
CYLINDER    2  1    0.60198     76.20  0.0
CUBOID      3  1  4P0.62992     76.20  0.0
UNIT 6
COM=" BOTTOM EDGE OF CS STRONGBACK "
CUBOID      7  1   24.95550   0.0       0.0      -0.45720  213.36  0.0
UNIT 7
COM=" VERTICAL EDGE OF CS STRONGBACK "
CUBOID      7  1    0.0      -0.45720  24.13000  -0.45720  213.36  0.0
UNIT 8
COM=" GADOLINIA ABSORBER PANEL "
CUBOID      9  1    0.04445  -0.04445  18.41500   0.0      213.36  0.0
CUBOID      8  1    0.05461  -0.05461  18.41500   0.0      213.36  0.0
GLOBAL
UNIT 9
COM=" 17X17 OFA ASSEMBLY IN CASK "
ARRAY 1   0.0       0.0       0.0
REPLICATE   3  1   20.32000   2.99720  10.16000  38.10000  12.9032 0.0 1
HOLE 6    0.0       0.0       0.0
HOLE 7    0.0       0.0       0.0
HOLE 8   -0.85344   0.81280   0.0
REPLICATE   7  1    0.22606   0.0       0.22606   0.22606  0.22606 0.0 1
END GEOM

READ ARRAY
ARA=1 NUX=17 NUY=17 NUZ=2 COM=" 17X17 OFA ASSEMBLY WITH 32 IFBA "
LOOP
 1   1  17   1      1  17   1     1   1   1
 2   9   9   1      2  16  14     1   1   1
 2   2  16  14      9   9   1     1   1   1
 2   5  13   8      3  15  12     1   1   1
```

**Table 6-3-4 (cont.) Listing of KENO Input for Type B Assembly With Additional IFBA Absorbers**

```
  2   3  15  12      5  13   8     1   1   1
  2   7  11   4      3  15  12     1   1   1
  2   3  15  12      7  11   4     1   1   1
  2   5  13   4      5  13   4     1   1   1
  2   8  10   2      8  10   2     1   1   1
  3   3  15   3      6  12   3     1   1   1
  3   4  14  10      4  14  10     1   1   1
  3   6  12   3      3  15  12     1   1   1
  4   1  17   1      1  17   1     2   2   1
  5   3  15   3      6  12   3     2   2   1
  5   4  14  10      4  14  10     2   2   1
  5   6  12   3      3  15  12     2   2   1
END LOOP
END ARRAY

READ BOUNDS
ALL=SPECULAR
END BOUNDS

READ PLOT
  TTL='BOX SLICE THROUGH CASK MODEL '
  PIC=BOX
  NCH='0.I+.+SSA*'
  XUL= -2.99720 YUL= 31.80334 ZUL= 15.0
  XLR= 41.96334 YLR=-38.32606 ZLR= 15.0
  UAX=1.0    VDN=-1.0   NAX=130
END
  TTL='MAT SLICE THROUGH CASK MODEL '
  PIC=MAT
  NCH='0.ZWIZWSAS'
  XUL= -2.99720 YUL= 31.80334 ZUL= 15.0
  XLR= 41.96334 YLR=-38.32606 ZLR= 15.0
  UAX=1.0    VDN=-1.0   NAX=130
END PLOT
END DATA
```

**Table 6-3-5 Listing of KENO Input for Type B Assembly With Additional Pyrex BA Absorbers**

```
TITLE-CASK WITH 17X17 OFA 5.00 W/O ASSEMBLY - 4 PYREX Bas

READ PARAMETERS
  TME=6.0    RUN=YES    PLT=YES
  GEN=900    NPG=300    NSK=005    LIB=41
  XS1=YES    NUB=YES
END PARAMETERS

READ MIXT  SCT=2
MIX= 1
'  UO2 PELLET 5.00 W/O (96.5% TD, 0% DISH, NOBA)
          1292235      0.0011942
          1292238      0.022404
            18016      0.047196
MIX= 2
'  ZIRC FUEL ROD CLADDING (NOBA)
           240302      0.043326
MIX= 3
'  H2O AT 1.00 G/CC (NOBA)
            31001      0.066854
            38016      0.033427
MIX= 4
'  PYREX BA MATERIAL (B10*0.95*0.75)
            65010      6.837358E-04
            65011      3.862628E-03
            68016      0.045331
           611023      0.000880
           613027      0.000680
           614000      0.018040
MIX= 5
'  STAINLESS STEEL CLADDING FOR PYREX BA
           324000      0.017386
           525055      0.001732
           326000      0.058019
           328000      0.008142
MIX= 6
'  CARBON STEEL FOR STRONGBACK & SHELL
            36012      4.728898E-4
           315031      5.807008E-5
           316032      6.642906E-5
           325055      3.877064E-4
           326000      8.420119E-2
MIX= 7
'  GADOLINIA OXIDE ABSORBER (0.02 GM GD2O3/CM2 @ 0.01016 CM THICKNESS)
            48016      9.810529E-3
           464152      1.308071E-5
           464154      1.373474E-4
           464155      9.679722E-4
           464156      1.347313E-3
           464157      1.026835E-3
           464158      1.622008E-3
           464160      1.425792E-3
MIX= 8
'  CARBON STEEL SHEET FOR GD ABSORBER
            56012      4.728898E-4
           515031      5.807008E-5
           516032      6.642906E-5
           525055      3.877064E-4
           526000      8.420119E-2
END MIXT
```

**Table 6-3-5 Listing of KENO Input for Type B Assembly With Additional Pyrex BA Absorbers (cont.)**

```
READ GEOMETRY
UNIT 1
COM=" 17X17 OFA FUEL ROD "
CYLINDER    1  1    0.392176  137.16  0.0
CYLINDER    0  1    0.40005   137.16  0.0
CYLINDER    2  1    0.45720   137.16  0.0
CUBOID      3   1 4P0.62992  137.16.0.0
UNIT 2
COM=" 17X17 OFA GUIDE TUBE & INSTRUMENT TUBE "
CYLINDER    3  1    0.56134   137.16  0.0
CYLINDER    2  1    0.60198   137.16  0.0
CUBOID      3  1  4P0.62992   137.16  0.0
UNIT 3
COM=" 17X17 OFA GUIDE TUBE WITH PYREX BA INSIDE "
CYLINDER    0  1    0.198755  137.16  0.0
CYLINDER    5  1    0.215265  137.16  0.0
CYLINDER    0  1    0.226060  137.16  0.0
CYLINDER    4  1    0.411480  137.16  0.0
CYLINDER    0  1    0.421640  137.16  0.0
CYLINDER    5  1    0.466090  137.16  0.0
CYLINDER    3  1    0.56134   137.16  0.0
CYLINDER    2  1    0.60198   137.16  0.0
CUBOID      3  1  4P0.62992   137.16  0.0
UNIT 4
COM=" 17X17 OFA FUEL ROD "
CYLINDER    1  1    0.392176   76.20  0.0
CYLINDER    0  1    0.40005    76.20  0.0
CYLINDER    2  1    0.45720    76.20  0.0
CUBOID      3  1  4P0.62992    76.20  0.0
UNIT 5
COM=" 17X17 OFA GUIDE TUBE & INSTRUMENT TUBE "
CYLINDER    3  1    0.56134    76.20  0.0
CYLINDER    2  1    0.60198    76.20  0.0
CUBOID      3  1  4P0.62992    76.20  0.0
UNIT 6
COM=" BOTTOM EDGE OF CS STRONGBACK "
CUBOID      6  1   24.95550   0.0       0.0      -0.45720  213.36  0.0
UNIT 7
COM=" VERTICAL EDGE OF CS STRONGBACK "
CUBOID      6  1    0.0      -0.45720  24.13000  -0.45720  213.36  0.0
UNIT 8
COM=" GADOLINIA ABSORBER PANEL "
CUBOID      8  1    0.04445  -0.04445  18.41500   0.0      213.36  0.0
CUBOID      7  1    0.05461  -0.05461  18.41500   0.0      213.36  0.0
GLOBAL
UNIT 9
COM=" 17X17 OFA ASSEMBLY IN CASK "
ARRAY 1   0.0       0.0       0.0
REPLICATE   3  1   20.32000   2.99720  10.16000  38.10000  12.9032 0.0 1
HOLE 6    0.0       0.0       0.0
HOLE 7    0.0       0.0       0.0
HOLE 8   -0.85344   0.81280   0.0
REPLICATE   6  1    0.22606   0.0       0.22606   0.22606  0.22606 0.0 1
END GEOM
READ ARRAY
```

**Table 6-3-5 Listing of KENO Input for Type B Assembly With Additional Pyrex BA Absorbers (cont.)**

```
ARA=1 NUX=17 NUY=17 NUZ=2 COM=" 17X17 OFA ASSEMBLY WITH 4 PYREX BAs"
LOOP
 1   1  17   1     1  17   1     1   1   1
 2   3  15   3     6  12   3     1   1   1
 2   4  14  10     4  14  10     1   1  1
 2   6  12   3     3  15  12     1   1   1
 3   6  12   6     6  12   6     1   1   1
 4   1  17   1     1  17   1     2   2   1
 5   3  15   3     6  12   3     2   2   1
 5   4  14  10     4  14  10     2   2  1
 5   6  12   3     3  15  12     2   2   1
END LOOP
END ARRAY

READ BOUNDS
ALL=SPECULAR
END BOUNDS

READ PLOT
  TTL='BOX SLICE THROUGH CASK MODEL '
  PIC=BOX
  NCH='0.+P.+SSA*'
  XUL= -2.99720 YUL= 31.80334 ZUL= 15.0
  XLR= 41.96334 YLR=-38.32606 ZLR= 15.0
  UAX=1.0    VDN=-1.0   NAX=130
END
  TTL='MAT SLICE THROUGH CASK MODEL '
  PIC=MAT
  NCH='0.ZWPSCGC'
  XUL= -2.99720 YUL= 31.80334 ZUL= 15.0
  XLR= 41.96334 YLR=-38.32606 ZLR= 15.0
  UAX=1.0    VDN=-1.0   NAX=130
END PLOT
END DATA
```

**Table 6-3-6 Listing of KENO Input for Type B Assembly With Additional WABA Absorbers**

```
TITLE-CASK WITH 17X17 OFA 5.00 W/O ASSEMBLY - 4 WABAs

READ PARAMETERS
  TME=6.0    RUN=YES    PLT=YES
  GEN=900    NPG=300    NSK=005    LIB=41
  XS1=YES    NUB=YES
END PARAMETERS

READ MIXT  SCT=2
MIX= 1
'  UO2 PELLET 5.00 W/O (96.5% TD, 0% DISH, NOBA)
          1292235      0.0011942
          1292238      0.022404
            18016      0.047196
MIX= 2
'  ZIRC FUEL ROD CLADDING (NOBA)
           240302      0.043326
MIX= 3
'  H2O AT 1.00 G/CC (NOBA)
            31001      0.066854
            38016      0.033427
MIX= 4
'  WABA MATERIAL (B10*0.85*0.75)
            75010      0.001914
            75011      0.012084
            76012      0.003772
            78016      0.039580
           713027      0.026387
MIX= 5
'  STAINLESS STEEL CLADDING FOR PYREX BA (NOT USED FOR WABA)
           324000      0.017386
           525055      0.001732
           326000      0.058019
           328000      0.008142
MIX= 6
'  CARBON STEEL FOR STRONGBACK & SHELL
            36012      4.728898E-4
           315031      5.807008E-5
           316032      6.642906E-5
           325055      3.877064E-4
           326000      8.420119E-2
MIX= 7
'  GADOLINIA OXIDE ABSORBER (0.02 GM GD2O3/CM2 @ 0.01016 CM THICKNESS)
            48016      9.810529E-3
           464152      1.308071E-5
           464154      1.373474E-4
           464155      9.679722E-4
           464156      1.347313E-3
           464157      1.026835E-3
           464158      1.622008E-3
           464160      1.425792E-3
MIX= 8
'  CARBON STEEL SHEET FOR GD ABSORBER
            56012      4.728898E-4
           515031      5.807008E-5
           516032      6.642906E-5
           525055      3.877064E-4
           526000      8.420119E-2
END MIXT
```

**Table 6-3-6 Listing of KENO Input for Type B Assembly With Additional WABA Absorbers (cont.)**

```
READ GEOMETRY
UNIT 1
COM=" 17X17 OFA FUEL ROD "
CYLINDER    1  1    0.392176  137.16  0.0
CYLINDER    0  1    0.40005   137.16  0.0
CYLINDER    2  1    0.45720   137.16  0.0
CUBOID      3  1  4P0.62992   137.16  0.0
UNIT 2
COM=" 17X17 OFA GUIDE TUBE & INSTRUMENT TUBE "
CYLINDER    3  1    0.56134   137.16  0.0
CYLINDER    2  1    0.60198   137.16  0.0
CUBOID      3  1  4P0.62992   137.16  0.0
UNIT 3
COM=" 17X17 OFA GUIDE TUBE WITH WABA INSIDE "
CYLINDER    3  1    0.28575   137.16  0.0
CYLINDER    2  1    0.33909   137.16  0.0
CYLINDER    0  1    0.35306   137.16  0.0
CYLINDER    4  1    0.40386   137.16  0.0
CYLINDER    0  1    0.41783   137.16  0.0
CYLINDER    2  1    0.48387   137.16  0.0
CYLINDER    3  1    0.56134   137.16  0.0
CYLINDER    2  1    0.60198   137.16  0.0
CUBOID      3  1  4P0.62992   137.16  0.0
UNIT 4
COM=" 17X17 OFA FUEL ROD "
CYLINDER    1  1    0.392176   76.20  0.0
CYLINDER    0  1    0.40005    76.20  0.0
CYLINDER    2  1    0.45720    76.20  0.0
CUBOID      3  1  4P0.62992    76.20  0.0
UNIT 5
COM=" 17X17 OFA GUIDE TUBE & INSTRUMENT TUBE "
CYLINDER    3  1    0.56134    76.20  0.0
CYLINDER    2  1    0.60198    76.20  0.0
CUBOID      3  1  4P0.62992    76.20  0.0
UNIT 6
COM=" BOTTOM EDGE OF CS STRONGBACK "
CUBOID      6  1   24.95550   0.0       0.0      -0.45720  213.36  0.0
UNIT 7
COM=" VERTICAL EDGE OF CS STRONGBACK "
CUBOID      6  1    0.0      -0.45720  24.13000  -0.45720  213.36  0.0
UNIT 8
COM=" GADOLINIA ABSORBER PANEL "
CUBOID      8  1    0.04445  -0.04445  18.41500   0.0      213.36  0.0
CUBOID      7  1    0.05461  -0.05461  18.41500   0.0      213.36  0.0
GLOBAL
UNIT 9
COM=" 17X17 OFA ASSEMBLY IN CASK "
ARRAY 1   0.0       0.0       0.0
REPLICATE   3  1   20.32000   2.99720  10.16000  38.10000  12.9032 0.0 1
HOLE 6    0.0       0.0       0.0
HOLE 7    0.0       0.0       0.0
HOLE 8   -0.85344   0.81280   0.0
REPLICATE   6  1    0.22606   0.0       0.22606   0.22606  0.22606 0.0 1
END GEOM
READ ARRAY
```

**Table 6-3-6 Listing of KENO Input for Type B Assembly With Additional WABA Absorbers (cont.)**

```
ARA=1 NUX=17 NUY=17 NUZ=2 COM=" 17X17 OFA ASSEMBLY WITH 4 WABAs"
LOOP
 1   1  17   1      1  17   1      1   1   1
 2   3  15   3      6  12   3      1   1   1
 2   4  14  10      4  14  10      1   1   1
 2   6  12   3      3  15  12      1   1   1
 3   6  12   6      6  12   6      1   1   1
 4   1  17   1      1  17   1      2   2   1
 5   3  15   3      6  12   3      2   2   1
 5   4  14  10      4  14  10      2   2   1
 5   6  12   3      3  15  12      2   2   1
END LOOP
END ARRAY

READ BOUNDS
ALL=SPECULAR
END BOUNDS

READ PLOT
  TTL='BOX SLICE THROUGH CASK MODEL '
  PIC=BOX
  NCH='0.+W.+SSA*'
  XUL= -2.99720 YUL= 31.80334 ZUL= 15.0
  XLR= 41.96334 YLR=-38.32606 ZLR= 15.0
  UAX=1.0    VDN=-1.0   NAX=130
END
  TTL='MAT SLICE THROUGH CASK MODEL '
  PIC=MAT
  NCH='0.ZWASCGC'
  XUL= -2.99720 YUL= 31.80334 ZUL= 15.0
  XLR= 41.96334 YLR=-38.32606 ZLR= 15.0
  UAX=1.0    VDN=-1.0   NAX=130
END PLOT
END DATA
```

**Table 6-3-7 Listing of KENO Input for Type B Assembly With Additional Ag-In-Cd Absorbers**

```
TITLE-CASK WITH 17X17 OFA 5.00 W/O ASSEMBLY - 4 AG-IN-CD RCCAs

READ PARAMETERS
  TME=6.0    RUN=YES    PLT=YES
  GEN=900    NPG=300    NSK=005    LIB=41
  XS1=YES    NUB=YES
END PARAMETERS

READ MIXT  SCT=2
MIX= 1
'  UO2 PELLET 5.00 W/O (96.5% TD, 0% DISH, NOBA)
          1292235      0.0011942
          1292238      0.022404
            18016      0.047196
MIX= 2
'  ZIRC FUEL ROD CLADDING (NOBA)
           240302      0.043326
MIX= 3
'  H2O AT 1.00 G/CC (NOBA)
            31001      0.066854
            38016      0.033427
MIX= 4
'  AG-IN-CD RCCA MATERIAL (MIN AG*0.75, MIN IN*0.75, MIN CD*0.75)
           847107      0.017551
           847109      0.016305
           848000      0.001941
           849113      0.000254
           849115      0.005648
MIX= 5
'  STAINLESS STEEL CLADDING FOR RCCA
           324000      0.017386
           525055      0.001732
           326000      0.058019
           328000      0.008142
MIX= 6
'  CARBON STEEL FOR STRONGBACK & SHELL
            36012      4.728898E-4
           315031      5.807008E-5
           316032      6.642906E-5
           325055      3.877064E-4
           326000      8.420119E-2
MIX= 7
'  GADOLINIA OXIDE ABSORBER (0.02 GM GD2O3/CM2 @ 0.01016 CM THICKNESS)
            48016      9.810529E-3
           464152      1.308071E-5
           464154      1.373474E-4
           464155      9.679722E-4
           464156      1.347313E-3
           464157      1.026835E-3
           464158      1.622008E-3
           464160      1.425792E-3
MIX= 8
'  CARBON STEEL SHEET FOR GD ABSORBER
            56012      4.728898E-4
           515031      5.807008E-5
           516032      6.642906E-5
           525055      3.877064E-4
           526000      8.420119E-2
END MIXT
```

**Table 6-3-7 Listing of KENO Input for Type B Assembly With Additional Ag-In-Cd Absorbers (cont.)**

```
READ GEOMETRY
UNIT 1
COM=" 17X17 OFA FUEL ROD "
CYLINDER    1  1    0.392176  137.16  0.0
CYLINDER    0  1    0.40005   137.16  0.0
CYLINDER    2  1    0.45720   137.16  0.0
CUBOID      3  1  4P0.62992   137.16  0.0
UNIT 2
COM=" 17X17 OFA GUIDE TUBE & INSTRUMENT TUBE "
CYLINDER    3  1    0.56134   137.16  0.0
CYLINDER    2  1    0.60198   137.16  0.0
CUBOID      3  1  4P0.62992   137.16  0.0
UNIT 3
COM=" 17X17 OFA GUIDE TUBE WITH AG-IN-CD RCCA INSIDE "
CYLINDER    4  1    0.41783   137.16  0.0
CYLINDER    0  1    0.42164   137.16  0.0
CYLINDER    5  1    0.46609   137.16  0.0
CYLINDER    3  1    0.56134   137.16  0.0
CYLINDER    2  1    0.60198   137.16  0.0
CUBOID      3  1  4P0.62992   137.16  0.0
UNIT 4
COM=" 17X17 OFA FUEL ROD "
CYLINDER    1  1    0.392176   76.20  0.0
CYLINDER    0  1    0.40005    76.20  0.0
CYLINDER    2  1    0.45720    76.20  0.0
CUBOID      3  1  4P0.62992    76.20  0.0
UNIT 5
COM=" 17X17 OFA GUIDE TUBE & INSTRUMENT TUBE "
CYLINDER    3  1    0.56134    76.20  0.0
CYLINDER    2  1    0.60198    76.20  0.0
CUBOID      3  1  4P0.62992    76.20  0.0
UNIT 6
COM=" BOTTOM EDGE OF CS STRONGBACK "
CUBOID      6  1   24.95550   0.0       0.0      -0.45720  213.36  0.0
UNIT 7
COM=" VERTICAL EDGE OF CS STRONGBACK "
CUBOID      6  1    0.0      -0.45720  24.13000  -0.45720  213.36  0.0
UNIT 8
COM=" GADOLINIA ABSORBER PANEL "
CUBOID      8  1    0.04445  -0.04445  18.41500   0.0      213.36  0.0
CUBOID      7  1    0.05461  -0.05461  18.41500   0.0      213.36  0.0
GLOBAL
UNIT 9
COM=" 17X17 OFA ASSEMBLY IN CASK "
ARRAY 1   0.0        0.0       0.0
REPLICATE   3  1   20.32000   2.99720  10.16000  38.10000  12.9032 0.0 1
HOLE 6    0.0        0.0       0.0
HOLE 7    0.0        0.0       0.0
HOLE 8   -0.85344    0.81280   0.0
REPLICATE   6  1    0.22606   0.0       0.22606   0.22606  0.22606 0.0 1
END GEOM
READ ARRAY
ARA=1 NUX=17 NUY=17 NUZ=2 COM=" 17X17 OFA ASSEMBLY WITH 4 RCCAs"
LOOP
 1   1  17   1     1  17   1     1   1   1
 2   3  15   3     6  12   3     1   1   1
 2   4  14  10     4  14  10     1   1   1
```

**Table 6-3-7 Listing of KENO Input for Type B Assembly With Additional Ag-In-Cd Absorbers (cont.)**

```
  2   6  12   3     3  15  12     1   1   1
  3   6  12   6     6  12   6     1   1   1
  4   1  17   1     1  17   1     2   2   1
  5   3  15   3     6  12   3     2   2   1
  5   4  14  10     4  14  10     2   2   1
  5   6  12   3     3  15  12     2   2   1
END LOOP
END ARRAY

READ BOUNDS
ALL=SPECULAR
END BOUNDS

READ PLOT
  TTL='BOX SLICE THROUGH CASK MODEL '
  PIC=BOX
  NCH='0.+R.+SSA*'
  XUL= -2.99720 YUL= 31.80334 ZUL= 15.0
  XLR= 41.96334 YLR=-38.32606 ZLR= 15.0
  UAX=1.0    VDN=-1.0   NAX=130
END
  TTL='MAT SLICE THROUGH CASK MODEL '
  PIC=MAT
  NCH='0.ZWASCGC'
  XUL= -2.99720 YUL= 31.80334 ZUL= 15.0
  XLR= 41.96334 YLR=-38.32606 ZLR= 15.0
  UAX=1.0    VDN=-1.0   NAX=130
END PLOT
END DATA
```

**Table 6-3-8 Listing of KENO Input for Type B Assembly With Additional GD Absorber Plates**

```
TITLE-CASK WITH 17X17 OFA 5.00 W/O ASSEMBLY WITH ADDED GD ABSORBER

READ PARAMETERS
  TME=6.0    RUN=YES    PLT=YES
  GEN=900    NPG=300    NSK=005    LIB=41
  XS1=YES    NUB=YES
END PARAMETERS

READ MIXT  SCT=2
MIX= 1
'  UO2 PELLET 5.00 W/O (96.5% TD, 0% DISH)
          1292235      0.0011942
          1292238      0.022404
            18016      0.047196
MIX= 2
'  ZIRC FUEL ROD CLADDING
           240302      0.043326
MIX= 3
'  H2O AT 1.00 G/CC
            31001      0.066854
            38016      0.033427
MIX= 4
'  CARBON STEEL FOR STRONGBACK & SHELL
            36012      4.728898E-4
           315031      5.807008E-5
           316032      6.642906E-5
           325055      3.877064E-4
           326000      8.420119E-2
MIX= 5
'  GADOLINIA OXIDE ABSORBER (0.02 GM GD2O3/CM2 @ 0.01016 CM THICKNESS)
            48016      9.810529E-3
           464152      1.308071E-5
           464154      1.373474E-4
           464155      9.679722E-4
           464156      1.347313E-3
           464157      1.026835E-3
           464158      1.622008E-3
           464160      1.425792E-3
MIX= 6
'  CARBON STEEL SHEET FOR GD ABSORBER
            56012      4.728898E-4
           515031      5.807008E-5
           516032      6.642906E-5
           525055      3.877064E-4
           526000      8.420119E-2
END MIXT

READ GEOMETRY
UNIT 1
COM=" 17X17 OFA FUEL ROD "
CYLINDER    1  1    0.392176  30.0  0.0
CYLINDER    0  1    0.40005   30.0  0.0
CYLINDER    2  1    0.45720   30.0  0.0
CUBOID      3  1  4P0.62992   30.0  0.0
UNIT 2
COM=" 17X17 OFA GUIDE TUBE & INSTRUMENT TUBE "
CYLINDER    3  1    0.56134   30.0  0.0
CYLINDER    2  1    0.60198   30.0  0.0
CUBOID      3  1  4P0.62992   30.0  0.0
```

**Table 6-3-8 Listing of KENO Input for Type B Assembly With Additional GD Absorber Plates (cont.)**

```
UNIT 3
COM=" BOTTOM EDGE OF CS STRONGBACK "
CUBOID      4  1   24.95550   0.0       0.0       -0.45720  30.0  0.0
UNIT 4
COM=" VERTICAL EDGE OF CS STRONGBACK "
CUBOID      4  1    0.0      -0.45720  24.13000  -0.45720  30.0  0.0
UNIT 5
COM=" VERTICAL GADOLINIA ABSORBER PANEL "
CUBOID      6  1    0.04445  -0.04445  18.41500   0.0      30.0  0.0
CUBOID      5  1    0.05461  -0.05461  18.41500   0.0      30.0  0.0
UNIT 6
COM=" ADDITIONAL GADOLINIA ABSORBER PANEL UNDER STRONGBACK "
CUBOID      6  1   18.41500   0.0       0.04445  -0.04445   30.0  0.0
CUBOID      5  1   18.41500   0.0       0.05461  -0.05461   30.0  0.0
GLOBAL
UNIT 7
COM=" 17X17 OFA ASSEMBLY IN CASK "
ARRAY 1   0.0       0.0       0.0
REPLICATE   3  1   20.32000   2.99720  10.16000  38.10000  0.0  0.0 1
HOLE 3    0.0       0.0       0.0
HOLE 4    0.0       0.0       0.0
HOLE 5   -0.85344   0.81280   0.0
HOLE 6    0.81280  -0.51181   0.0
REPLICATE   4  1    0.22606   0.0       0.22606   0.22606  0.0  0.0 1
END GEOM

READ ARRAY
ARA=1 NUX=17 NUY=17 NUZ=1 COM=" 17X17 OFA ASSEMBLY "
LOOP
 1   1  17   1     1  17   1     1   1   1
 2   3  15   3     6  12   3     1   1   1
 2   4  14  10     4  14  10     1   1   1
 2   6  12   3     3  15  12     1   1   1
END LOOP
END ARRAY
READ BOUNDS
ALL=SPECULAR
END BOUNDS
READ PLOT
  TTL='BOX SLICE THROUGH CASK MODEL '
  PIC=BOX
  NCH='0.GHVAB*'
  XUL= -2.99720 YUL= 31.80334 ZUL= 15.0
  XLR= 41.96334 YLR=-38.32606 ZLR= 15.0
  UAX=1.0    VDN=-1.0   NAX=130
END
  TTL='MAT SLICE THROUGH CASK MODEL '
  PIC=MAT
  NCH='0.ZWSGS'
  XUL= -2.99720 YUL= 31.80334 ZUL= 15.0
  XLR= 41.96334 YLR=-38.32606 ZLR= 15.0
  UAX=1.0    VDN=-1.0   NAX=130
END PLOT
END DATA
```

**Table 6-3-9 Listing of KENO Input for Type C Assembly**

```
TITLE-MC4 4.8 W/O VVER-1000 CASK IN 3D

READ PARAMETERS
  TME=9      RUN=YES    PLT=YES
  GEN=900    NPG=305    NSK=005    LIB=41
  XS1=YES    NUB=YES
END PARAMETERS

READ MIXT  SCT=2
MIX= 1
'  UO2 PELLET 4.80 W/O (96.5% TD, 0% DISH)
           192235      0.0011465
           192238      0.022451
            18016      0.047195
MIX= 2
'  ZIRC FUEL ROD CLADDING
           240302      0.043326
MIX= 3
'  H2O AT 1.00 G/CC
            31001      0.066854
            38016      0.033427
MIX= 4
'  CARBON STEEL FOR STRONGBACK & SHELL
            36012      4.728898E-4
           315031      5.807008E-5
           316032      6.642906E-5
           325055      3.877064E-4
           326000      8.420119E-2
MIX= 5
'  GADOLINIA OXIDE ABSORBER (0.02 GM GD2O3/CM2 @ 0.01016 CM THICKNESS)
            48016      9.810529E-3
           464152      1.308071E-5
           464154      1.373474E-4
           464155      9.679722E-4
           464156      1.347313E-3
           464157      1.026835E-3
           464158      1.622008E-3
           464160      1.425792E-3
MIX= 6
'  CARBON STEEL SHEET FOR GD ABSORBER
            56012      4.728898E-4
           515031      5.807008E-5
           516032      6.642906E-5
           525055      3.877064E-4
           526000      8.420119E-2
END MIXT

READ GEOMETRY

UNIT 1
COM=" 17OFA FUEL ROD (NOBA) - BOTTOM HALF "
ZHEMICYL-Y  1  1    0.392176                                181.5 0.0
ZHEMICYL-Y  0  1    0.40005                                 181.5 0.0
ZHEMICYL-Y  2  1    0.45720                                 181.5 0.0
CUBOID      3  1    0.55209  -0.55209   0.00000  -0.63750   181.5 0.0
```

**Table 6-3-9 (cont.) Listing of KENO Input for Type C Assembly**

```
UNIT 2
COM=" 17OFA FUEL ROD (NOBA) - TOP HALF "
ZHEMICYL+Y  1  1    0.392176                                181.5 0.0
ZHEMICYL+Y  0  1    0.40005                                  181.5 0.0
ZHEMICYL+Y  2  1    0.45720                                  181.5 0.0
CUBOID      3  1    0.55209  -0.55209   0.63750   0.00000   181.5 0.0

UNIT 3
COM=" VVER 1000 MODIFIED GT/IT - BOTTOM HALF "
ZHEMICYL-Y  3  1    0.4710                                   181.5 0.0
ZHEMICYL-Y  2  1    0.5400                                   181.5 0.0
CUBOID      3  1    0.55209  -0.55209   0.00000  -0.63750   181.5 0.0

UNIT 4
COM=" VVER 1000 MODIFIED GT/IT - TOP HALF "
ZHEMICYL+Y  3  1    0.4710                                   181.5 0.0
ZHEMICYL+Y  2  1    0.5400                                   181.5 0.0
CUBOID      3  1    0.55209  -0.55209   0.63750   0.00000   181.5 0.0

UNIT 5
COM=" EMPTY WATER CELL - TOP OR BOTTOM HALF "
CUBOID      3  1    0.55209  -0.55209   0.63750   0.00000   181.5 0.0

UNIT 13
COM=" BOTTOM EDGE OF CS STRONGBACK "
CUBOID      4  1   24.95550   0.0       0.0      -0.45720   181.5  0.0

UNIT 14
COM=" VERTICAL EDGE OF CS STRONGBACK "
CUBOID      4  1    0.0      -0.45720  24.13000  -0.45720   181.5  0.0

UNIT 15
COM=" VERTICAL GADOLINIA ABSORBER PANEL "
CUBOID      6  1    0.04445  -0.04445  18.41500   0.0       181.5  0.0
CUBOID      5  1    0.05461  -0.05461  18.41500   0.0       181.5  0.0

UNIT 16
COM=" ONE-SIDED PART-LENGTH GD PANEL UNDER STRONGBACK "
CUBOID      6  1   23.49500   0.0       0.0      -0.08890   33.02 0.0
CUBOID      5  1   23.49500   0.0       0.0      -0.09906   33.02 0.0

UNIT 17
COM=" GAP IN PART-LENGTH GD PANEL UNDER STRONGBACK "
CUBOID      3  1   23.49500   0.0       0.0      -0.09906    5.08 0.0

UNIT 18
COM=" HORIZONTAL GAD ABSORBER PLATE"
ARRAY 2             0.0                -0.09906              0.0

GLOBAL

UNIT 20
COM=" VVER 1000 ASSEMBLY IN CASK "
ARRAY 1             0.0                 1.37160              0.0
CUBOID      3  1   41.73728  -2.99720  38.30660 -38.10000  196.74 0.0
```

**Table 6-3-9 Listing of KENO Input for Type C Assembly (cont.)**

```
HOLE 13   0.0        0.0        0.0
HOLE 14   0.0        0.0        0.0
HOLE 15  -0.85344    0.81280    0.0
HOLE 18   0.0       -0.457205   0.0

REPLICATE   4  1  0.22606 0.0  0.22606 0.22606 0.22606 0.0 1 END GEOM

READ ARRAY
ARA=1 NUX=21 NUY=42 NUZ=1 COM=" VVER 1000 ASSEMBLY IN H2O"
LOOP
 1   1  21   1     1  42   1     1   1   1
 2   2  20   2     1  41   2     1   1   1
 2   1  21   2     2  42   2     1   1   1
 3   5   5   1    21  21   1     1   1   1
 4   5   5   1    22  22   1     1   1   1
 3   6   6   1    16  26  10     1   1   1
 4   6   6   1    17  27  10     1   1   1
 3   8   8   1    12  20   8     1   1   1
 4   8   8   1    13  21   8     1   1   1
 3   8   8   1    30  30   1     1   1   1
 4   8   8   1    31  31   1     1   1   1
 3   9   9   1    25  25   1     1   1   1
 4   9   9   1    26  26   1     1   1   1
 3  10  10   1    16  16   1     1   1   1
 4  10  10   1    17  17   1     1   1   1
 3  11  11   1    11  31  10     1   1   1
 4  11  11   1    12  32  10     1   1   1
 3  12  12   1    26  26   1     1   1   1
 4  12  12   1    27  27   1     1   1   1
 3  13  13   1    17  17   1     1   1   1
 4  13  13   1    18  18   1     1   1   1
 3  14  14   1    12  22  10     1   1   1
 4  14  14   1    13  23  10     1   1   1
 3  14  14   1    30  30   1     1   1   1
 4  14  14   1    31  31   1     1   1   1
 3  16  16   1    16  26  10     1   1   1
 4  16  16   1    17  27  10     1   1   1
 3  17  17   1    21  21  10     1   1   1
 4  17  17   1    22  22  10     1   1   1
 5   1  10   1     1  42  41     1   1   1
 5   1   9   1     2  41  39     1   1   1
 5   1   8   1     3  40  37     1   1   1
 5   1   7   1     4  39  35     1   1   1
 5   1   6   1     5  38  33     1   1   1
 5   1   5   1     6  37  31     1   1   1
 5   1   4   1     7  36  29     1   1   1
 5   1   3   1     8  35  27     1   1   1
 5   1   2   1     9  34  25     1   1   1
 5   1   1   1    10  33  23     1   1   1
 5  12  21   1     1  42  41     1   1   1
 5  13  21   1     2  41  39     1   1   1
 5  14  21   1     3  40  37     1   1   1
 5  15  21   1     4  39  35     1   1   1
 5  16  21   1     5  38  33     1   1   1
 5  17  21   1     6  37  31     1   1   1
 5  18  21   1     7  36  29     1   1   1
 5  19  21   1     8  35  27     1   1   1
 5  20  21   1     9  34  25     1   1   1
 5  21  21   1    10  33  23     1   1   1
```

**Table 6-3-9 Listing of KENO Input for Type C Assembly (cont.)**

```
END LOOP
ARA=2 NUX=1  NUY=1  NUZ=11 COM=" HORIZONTAL GAD ABSORBER PLATE WITH GAPS"
FILL
 17 16 17 17 16 17 17 16 17 17 16
END FILL
END ARRAY

READ BOUNDS
ALL=SPECULAR
END BOUNDS

READ PLOT
  TTL='MAT SLICE THROUGH ASSEMBLY CENTER '
  PIC=MAT
  NCH='0.ZWSGS'
  XUL= 10.75915 YUL= 18.75915 ZUL= 15.0
  XLR= 18.75915 YLR= 10.75915 ZLR= 15.0
  UAX=1.0    VDN=-1.0   NAX=130
END
  TTL='MAT SLICE THROUGH ASSEMBLY ARRAY '
  PIC=MAT
  NCH='0.ZWSGS'
  XUL= -2.99720 YUL= 28.14660 ZUL= 15.0
  XLR= 28.14660 YLR= -2.99720 ZLR= 15.0
  UAX=1.0    VDN=-1.0   NAX=130
END
  TTL='MAT SLICE THROUGH CASK MODEL '
  PIC=MAT
  NCH='0.ZWSGS'
  XUL= -2.99720 YUL= 31.80334 ZUL= 15.0
  XLR= 41.96334 YLR=-38.32606 ZLR= 15.0
  UAX=1.0    VDN=-1.0   NAX=130
END PLOT

END DATA
```

**Table 6-3-10 Listing of KENO Input for Type C Assembly With Additional IFBA Absorbers**

```
TITLE-MC4 5.0 W/O VVER-1000 CASK WITH 24 IFBAS AT 108"

READ PARAMETERS
  TME=6      RUN=YES    PLT=YES
  GEN=900    NPG=305    NSK=005    LIB=41
  XS1=YES    NUB=YES
END PARAMETERS

READ MIXT  SCT=2
MIX= 1
'  UO2 PELLET 5.00 W/O (96.5% TD, 0% DISH)
           192235      0.0011942
           192238      0.022404
            18016      0.047196
MIX= 2
'  ZIRC FUEL ROD CLADDING
           240302      0.043326
MIX= 3
'  H2O AT 1.00 G/CC
            31001      0.066854
            38016      0.033427
MIX= 4
'  CARBON STEEL FOR STRONGBACK & SHELL
            36012      4.728898E-4
           315031      5.807008E-5
           316032      6.642906E-5
           325055      3.877064E-4
           326000      8.420119E-2
MIX= 5
'  GADOLINIA OXIDE ABSORBER (0.02 GM GD2O3/CM2 @ 0.01016 CM THICKNESS)
            48016      9.810529E-3
           464152      1.308071E-5
           464154      1.373474E-4
           464155      9.679722E-4
           464156      1.347313E-3
           464157      1.026835E-3
           464158      1.622008E-3
           464160      1.425792E-3
MIX= 6
'  CARBON STEEL SHEET FOR GD ABSORBER
            56012      4.728898E-4
           515031      5.807008E-5
           516032      6.642906E-5
           525055      3.877064E-4
           526000      8.420119E-2
MIX= 7
'  UO2 PELLET 5.00 W/O (96.5% TD, 0% DISH) IFBA ROD
          1092235      0.0011942
          1092238      0.022404
           108016      0.047196
MIX= 8
'  ZIRC FUEL ROD CLADDING, IFBA ROD (B10*0.95*0.75)
          1140302      0.043326
           115010      0.0001644
MIX= 9
'  H2O AT 1.00 G/CC (IFBA ROD)
           121001      0.066854
           128016      0.033427
END MIXT
```

**Table 6-3-10 Listing of KENO Input for Type C Assembly With Additional IFBA Absorbers (cont.)**

```
READ GEOMETRY

UNIT 1
COM=" 17OFA FUEL ROD (NOBA) - BOTTOM HALF "
ZHEMICYL-Y  1  1    0.392176                                44.34 0.0
ZHEMICYL-Y  0  1    0.40005                                 44.34 0.0
ZHEMICYL-Y  2  1    0.45720                                 44.34 0.0
CUBOID      3  1    0.55209  -0.55209   0.00000  -0.63750   44.34 0.0

UNIT 2
COM=" 17OFA FUEL ROD (NOBA) - TOP HALF "
ZHEMICYL+Y  1  1    0.392176                                44.34 0.0
ZHEMICYL+Y  0  1    0.40005                                 44.34 0.0
ZHEMICYL+Y  2  1    0.45720                                 44.34 0.0
CUBOID      3  1    0.55209  -0.55209   0.63750   0.00000   44.34 0.0

UNIT 3
COM=" VVER 1000 MODIFIED GT/IT - BOTTOM HALF "
ZHEMICYL-Y  3  1    0.4710                                  44.34 0.0
ZHEMICYL-Y  2  1    0.5400                                  44.34 0.0
CUBOID      3  1    0.55209  -0.55209   0.00000  -0.63750   44.34 0.0

UNIT 4
COM=" VVER 1000 MODIFIED GT/IT - TOP HALF "
ZHEMICYL+Y  3  1    0.4710                                  44.34 0.0
ZHEMICYL+Y  2  1    0.5400                                  44.34 0.0
CUBOID      3  1    0.55209  -0.55209   0.63750   0.00000   44.34 0.0

UNIT 5
COM=" EMPTY WATER CELL - TOP OR BOTTOM HALF "
CUBOID      3  1    0.55209  -0.55209   0.63750   0.00000   44.34 0.0

UNIT 6
COM=" 17OFA IFBA ROD - BOTTOM HALF "
ZHEMICYL-Y  7  1    0.392176                                137.16 0.0
ZHEMICYL-Y  0  1    0.40005                                 137.16 0.0
ZHEMICYL-Y  8  1    0.45720                                 137.16 0.0
CUBOID      9  1    0.55209  -0.55209   0.00000  -0.63750   137.16 0.0

UNIT 7
COM=" 17OFA IFBA ROD - TOP HALF "
ZHEMICYL+Y  7  1    0.392176                                137.16 0.0
ZHEMICYL+Y  0  1    0.40005                                 137.16 0.0
ZHEMICYL+Y  8  1    0.45720                                 137.16 0.0
CUBOID      9  1    0.55209  -0.55209   0.63750   0.00000   137.16 0.0

UNIT 8
COM=" 17OFA FUEL ROD (NO BA) - BOTTOM HALF "
ZHEMICYL-Y  1  1    0.392176                                137.16 0.0
ZHEMICYL-Y  0  1    0.40005                                 137.16 0.0
ZHEMICYL-Y  2  1    0.45720                                 137.16 0.0
CUBOID      3  1    0.55209  -0.55209   0.00000  -0.63750   137.16 0.0
```

**Table 6-3-10 Listing of KENO Input for Type C Assembly With Additional IFBA Absorbers (cont.)**

```
UNIT 9
COM=" 17OFA FUEL ROD (NO BA) - TOP HALF "
ZHEMICYL+Y  1  1    0.392176                                  137.16 0.0
ZHEMICYL+Y  0  1    0.40005                                   137.16 0.0
ZHEMICYL+Y  2  1    0.45720                                   137.16 0.0
CUBOID      3  1    0.55209  -0.55209   0.63750   0.00000    137.16 0.0

UNIT 10
COM=" VVER 1000 MODIFIED GT/IT - BOTTOM HALF "
ZHEMICYL-Y  3  1    0.4710                                    137.16 0.0
ZHEMICYL-Y  2  1    0.5400                                    137.16 0.0
CUBOID      3  1    0.55209  -0.55209   0.00000  -0.63750    137.16 0.0

UNIT 11
COM=" VVER 1000 MODIFIED GT/IT - TOP HALF "
ZHEMICYL+Y  3  1    0.4710                                    137.16 0.0
ZHEMICYL+Y  2  1    0.5400                                    137.16 0.0
CUBOID      3  1    0.55209  -0.55209   0.63750   0.00000    137.16 0.0

UNIT 12
COM=" EMPTY WATER CELL - TOP OR BOTTOM HALF "
CUBOID      3  1    0.55209  -0.55209   0.63750   0.00000    137.16 0.0

UNIT 13
COM=" BOTTOM EDGE OF CS STRONGBACK "
CUBOID      4  1   24.95550   0.0       0.0      -0.45720    181.5 0.0

UNIT 14
COM=" VERTICAL EDGE OF CS STRONGBACK "
CUBOID      4  1    0.0      -0.45720  24.13000  -0.45720    181.5 0.0

UNIT 15
COM=" VERTICAL GADOLINIA ABSORBER PANEL "
CUBOID      6  1    0.04445  -0.04445  18.41500   0.0        181.5 0.0
CUBOID      5  1    0.05461  -0.05461  18.41500   0.0        181.5 0.0

UNIT 16
COM=" ONE-SIDED PART-LENGTH GD PANEL UNDER STRONGBACK "
CUBOID      6  1   23.49500   0.0       0.0      -0.08890    33.02 0.0
CUBOID      5  1   23.49500   0.0       0.0      -0.09906    33.02 0.0

UNIT 17
COM=" GAP IN PART-LENGTH GD PANEL UNDER STRONGBACK "
CUBOID      3  1   23.49500   0.0       0.0      -0.09906     5.08 0.0

UNIT 18
COM=" HORIZONTAL GAD ABSORBER PLATE"
ARRAY 2              0.0              -0.09906                 0.0

GLOBAL

UNIT 20
COM=" VVER 1000 ASSEMBLY IN CASK "
ARRAY 1              0.0                1.37160                0.0
CUBOID      3  1   41.73728  -2.99720  38.30660 -38.10000   196.74 0.0
```

**Table 6-3-10 Listing of KENO Input for Type C Assembly With Additional IFBA Absorbers (cont.)**

```
HOLE 13    0.0        0.0        0.0
HOLE 14    0.0        0.0        0.0
HOLE 15   -0.85344    0.81280    0.0
HOLE 18    0.0       -0.457205   0.0

REPLICATE   4  1  0.22606 0.0  0.22606 0.22606 0.22606 0.0 1 END GEOM

READ ARRAY
ARA=1 NUX=21 NUY=42 NUZ=2 COM=" VVER 1000 ASSEMBLY IN H2O"
LOOP
 1   1  21   1     1  42   1     2   2   1
 2   2  20   2     1  41   2     2   2   1
 2   1  21   2     2  42   2     2   2   1
 3   5   5   1    21  21   1     2   2   1
 4   5   5   1    22  22   1     2   2   1
 3   6   6   1    16  26  10     2   2   1
 4   6   6   1    17  27  10     2   2   1
 3   8   8   1    12  20   8     2   2   1
 4   8   8   1    13  21   8     2   2   1
 3   8   8   1    30  30   1     2   2   1
 4   8   8   1    31  31   1     2   2   1
 3   9   9   1    25  25   1     2   2   1
 4   9   9   1    26  26   1     2   2   1
 3  10  10   1    16  16   1     2   2   1
 4  10  10   1    17  17   1     2   2   1
 3  11  11   1    11  31  10     2   2   1
 4  11  11   1    12  32  10     2   2   1
 3  12  12   1    26  26   1     2   2   1
 4  12  12   1    27  27   1     2   2   1
 3  13  13   1    17  17   1     2   2   1
 4  13  13   1    18  18   1     2   2   1
 3  14  14   1    12  22  10     2   2   1
 4  14  14   1    13  23  10     2   2   1
 3  14  14   1    30  30   1     2   2   1
 4  14  14   1    31  31   1     2   2   1
 3  16  16   1    16  26  10     2   2   1
 4  16  16   1    17  27  10     2   2   1
 3  17  17   1    21  21  10     2   2   1
 4  17  17   1    22  22  10     2   2   1
 5   1  10   1     1  42  41     2   2   1
 5   1   9   1     2  41  39     2   2   1
 5   1   8   1     3  40  37     2   2   1
 5   1   7   1     4  39  35     2   2   1
 5   1   6   1     5  38  33     2   2   1
 5   1   5   1     6  37  31     2   2   1
 5   1   4   1     7  36  29     2   2   1
 5   1   3   1     8  35  27     2   2   1
 5   1   2   1     9  34  25     2   2   1
 5   1   1   1    10  33  23     2   2   1
 5  12  21   1     1  42  41     2   2   1
 5  13  21   1     2  41  39     2   2   1
 5  14  21   1     3  40  37     2   2   1
 5  15  21   1     4  39  35     2   2   1
 5  16  21   1     5  38  33     2   2   1
 5  17  21   1     6  37  31     2   2   1
 5  18  21   1     7  36  29     2   2   1
 5  19  21   1     8  35  27     2   2   1
```

**Table 6-3-10 (cont.) Listing of KENO Input for Type C Assembly With Additional IFBA Absorbers**

| | | | | | | | | | |
|---|---|---|---|---|---|---|---|---|---|
| 5 | 20 | 21 | 1 | 9 | 34 | 25 | 2 | 2 | 1 |
| 5 | 21 | 21 | 1 | 10 | 33 | 23 | 2 | 2 | 1 |
| 8 | 1 | 21 | 1 | 1 | 42 | 1 | 1 | 1 | 1 |
| 9 | 2 | 20 | 2 | 1 | 41 | 2 | 1 | 1 | 1 |
| 9 | 1 | 21 | 2 | 2 | 42 | 2 | 1 | 1 | 1 |
| 10 | 5 | 5 | 1 | 21 | 21 | 1 | 1 | 1 | 1 |
| 11 | 5 | 5 | 1 | 22 | 22 | 1 | 1 | 1 | 1 |
| 10 | 6 | 6 | 1 | 16 | 26 | 10 | 1 | 1 | 1 |
| 11 | 6 | 6 | 1 | 17 | 27 | 10 | 1 | 1 | 1 |
| 10 | 8 | 8 | 1 | 12 | 20 | 8 | 1 | 1 | 1 |
| 11 | 8 | 8 | 1 | 13 | 21 | 8 | 1 | 1 | 1 |
| 10 | 8 | 8 | 1 | 30 | 30 | 1 | 1 | 1 | 1 |
| 11 | 8 | 8 | 1 | 31 | 31 | 1 | 1 | 1 | 1 |
| 10 | 9 | 9 | 1 | 25 | 25 | 1 | 1 | 1 | 1 |
| 11 | 9 | 9 | 1 | 26 | 26 | 1 | 1 | 1 | 1 |
| 10 | 10 | 10 | 1 | 16 | 16 | 1 | 1 | 1 | 1 |
| 11 | 10 | 10 | 1 | 17 | 17 | 1 | 1 | 1 | 1 |
| 10 | 11 | 11 | 1 | 11 | 31 | 10 | 1 | 1 | 1 |
| 11 | 11 | 11 | 1 | 12 | 32 | 10 | 1 | 1 | 1 |
| 10 | 12 | 12 | 1 | 26 | 26 | 1 | 1 | 1 | 1 |
| 11 | 12 | 12 | 1 | 27 | 27 | 1 | 1 | 1 | 1 |
| 10 | 13 | 13 | 1 | 17 | 17 | 1 | 1 | 1 | 1 |
| 11 | 13 | 13 | 1 | 18 | 18 | 1 | 1 | 1 | 1 |
| 10 | 14 | 14 | 1 | 12 | 22 | 10 | 1 | 1 | 1 |
| 11 | 14 | 14 | 1 | 13 | 23 | 10 | 1 | 1 | 1 |
| 10 | 14 | 14 | 1 | 30 | 30 | 1 | 1 | 1 | 1 |
| 11 | 14 | 14 | 1 | 31 | 31 | 1 | 1 | 1 | 1 |
| 10 | 16 | 16 | 1 | 16 | 26 | 10 | 1 | 1 | 1 |
| 11 | 16 | 16 | 1 | 17 | 27 | 10 | 1 | 1 | 1 |
| 10 | 17 | 17 | 1 | 21 | 21 | 10 | 1 | 1 | 1 |
| 11 | 17 | 17 | 1 | 22 | 22 | 10 | 1 | 1 | 1 |
| 12 | 1 | 10 | 1 | 1 | 42 | 41 | 1 | 1 | 1 |
| 12 | 1 | 9 | 1 | 2 | 41 | 39 | 1 | 1 | 1 |
| 12 | 1 | 8 | 1 | 3 | 40 | 37 | 1 | 1 | 1 |
| 12 | 1 | 7 | 1 | 4 | 39 | 35 | 1 | 1 | 1 |
| 12 | 1 | 6 | 1 | 5 | 38 | 33 | 1 | 1 | 1 |
| 12 | 1 | 5 | 1 | 6 | 37 | 31 | 1 | 1 | 1 |
| 12 | 1 | 4 | 1 | 7 | 36 | 29 | 1 | 1 | 1 |
| 12 | 1 | 3 | 1 | 8 | 35 | 27 | 1 | 1 | 1 |
| 12 | 1 | 2 | 1 | 9 | 34 | 25 | 1 | 1 | 1 |
| 12 | 1 | 1 | 1 | 10 | 33 | 23 | 1 | 1 | 1 |
| 12 | 12 | 21 | 1 | 1 | 42 | 41 | 1 | 1 | 1 |
| 12 | 13 | 21 | 1 | 2 | 41 | 39 | 1 | 1 | 1 |
| 12 | 14 | 21 | 1 | 3 | 40 | 37 | 1 | 1 | 1 |
| 12 | 15 | 21 | 1 | 4 | 39 | 35 | 1 | 1 | 1 |
| 12 | 16 | 21 | 1 | 5 | 38 | 33 | 1 | 1 | 1 |
| 12 | 17 | 21 | 1 | 6 | 37 | 31 | 1 | 1 | 1 |
| 12 | 18 | 21 | 1 | 7 | 36 | 29 | 1 | 1 | 1 |
| 12 | 19 | 21 | 1 | 8 | 35 | 27 | 1 | 1 | 1 |
| 12 | 20 | 21 | 1 | 9 | 34 | 25 | 1 | 1 | 1 |
| 12 | 21 | 21 | 1 | 10 | 33 | 23 | 1 | 1 | 1 |
| 6 | 9 | 13 | 4 | 15 | 27 | 12 | 1 | 1 | 1 |
| 7 | 9 | 13 | 4 | 16 | 28 | 12 | 1 | 1 | 1 |
| 6 | 7 | 15 | 4 | 17 | 25 | 8 | 1 | 1 | 1 |
| 7 | 7 | 15 | 4 | 18 | 26 | 8 | 1 | 1 | 1 |
| 6 | 9 | 13 | 4 | 19 | 23 | 4 | 1 | 1 | 1 |
| 7 | 9 | 13 | 4 | 20 | 24 | 4 | 1 | 1 | 1 |

**Table 6-3-10 Listing of KENO Input for Type C Assembly With Additional IFBA Absorbers (cont.)**

```
 6   7  15   8    21  21   1     1   1   1
 7   7  15   8    22  22   1     1   1   1
 6  11  11   1    17  25   8     1   1   1
 7  11  11   1    18  26   8     1   1   1
 6  11  11   1    13  29  16     1   1   1
 7  11  11   1    14  30  16     1   1   1
 6  11  11   1     9  33  24     1   1   1
 7  11  11   1    10  34  24     1   1   1
 6   5  17  12    15  27  12     1   1   1
 7   5  17  12    16  28  12     1   1   1
END LOOP
ARA=2 NUX=1  NUY=1  NUZ=11 COM=" HORIZONTAL GAD ABSORBER PLATE WITH GAPS"
FILL
 17 16 17 17 16 17 17 16 17 17 16
END FILL
END ARRAY

READ BOUNDS
ALL=SPECULAR
END BOUNDS

READ PLOT
  TTL='MAT SLICE THROUGH ASSEMBLY CENTER '
  PIC=MAT
  NCH='0.ZWSGS'
  XUL= 10.75915 YUL= 18.75915 ZUL= 15.0
  XLR= 18.75915 YLR= 10.75915 ZLR= 15.0
  UAX=1.0    VDN=-1.0   NAX=130
END
  TTL='MAT SLICE THROUGH ASSEMBLY ARRAY '
  PIC=MAT
  NCH='0.ZWSGS'
  XUL= -2.99720 YUL= 28.14660 ZUL= 15.0
  XLR= 28.14660 YLR= -2.99720 ZLR= 15.0
  UAX=1.0    VDN=-1.0   NAX=130
END
  TTL='MAT SLICE THROUGH CASK MODEL '
  PIC=MAT
  NCH='0.ZWSGS'
  XUL= -2.99720 YUL= 31.80334 ZUL= 15.0
  XLR= 41.96334 YLR=-38.32606 ZLR= 15.0
  UAX=1.0    VDN=-1.0   NAX=130
END PLOT

END DATA
```

**Table 6-3-11 Listing of KENO Input for Type C Assembly With Additional WABA Absorbers**

```
TITLE-MC4 5.0 W/O VVER-1000 CASK IN 3D WITH 4 - 108" WABAS

READ PARAMETERS
  TME=6      RUN=YES    PLT=YES
  GEN=900    NPG=300    NSK=005    LIB=41
  XS1=YES    NUB=YES
END PARAMETERS

READ MIXT  SCT=2
MIX= 1
'  UO2 PELLET 5.00 W/O (96.5% TD, 0% DISH)
           192235      0.0011942
           192238      0.022404
            18016      0.047196
MIX= 2
'  ZIRC FUEL ROD CLADDING
           240302      0.043326
MIX= 3
'  H2O AT 1.00 G/CC
            31001      0.066854
            38016      0.033427
MIX= 4
'  CARBON STEEL FOR STRONGBACK & SHELL
            36012      4.728898E-4
           315031      5.807008E-5
           316032      6.642906E-5
           325055      3.877064E-4
           326000      8.420119E-2
MIX= 5
'  GADOLINIA OXIDE ABSORBER (0.02 GM GD2O3/CM2 @ 0.01016 CM THICKNESS)
            48016      9.810529E-3
           464152      1.308071E-5
           464154      1.373474E-4
           464155      9.679722E-4
           464156      1.347313E-3
           464157      1.026835E-3
           464158      1.622008E-3
           464160      1.425792E-3
MIX= 6
'  CARBON STEEL SHEET FOR GD ABSORBER
            56012      4.728898E-4
           515031      5.807008E-5
           516032      6.642906E-5
           525055      3.877064E-4
           526000      8.420119E-2
MIX= 7
'  WABA MATERIAL (B10*0.85*0.75)
            75010      0.001914
            75011      0.012084
            76012      0.003772
            78016      0.039580
           713027      0.026387
END MIXT
```

**Table 6-3-11 Listing of KENO Input for Type C Assembly With Additional WABA Absorbers (cont.)**

```
READ GEOMETRY

UNIT 1
COM=" 17OFA FUEL ROD (NOBA) - BOTTOM HALF "
ZHEMICYL-Y  1  1    0.392176                                44.34 0.0
ZHEMICYL-Y  0  1    0.40005                                 44.34 0.0
ZHEMICYL-Y  2  1    0.45720                                 44.34 0.0
CUBOID      3  1    0.55209  -0.55209   0.00000  -0.63750   44.34 0.0

UNIT 2
COM=" 17OFA FUEL ROD (NOBA) - TOP HALF "
ZHEMICYL+Y  1  1    0.392176                                44.34 0.0
ZHEMICYL+Y  0  1    0.40005                                 44.34 0.0
ZHEMICYL+Y  2  1    0.45720                                 44.34 0.0
CUBOID      3  1    0.55209  -0.55209   0.63750   0.00000   44.34 0.0

UNIT 3
COM=" VVER 1000 MODIFIED GT/IT - BOTTOM HALF "
ZHEMICYL-Y  3  1    0.4710                                  44.34 0.0
ZHEMICYL-Y  2  1    0.5400                                  44.34 0.0
CUBOID      3  1    0.55209  -0.55209   0.00000  -0.63750   44.34 0.0

UNIT 4
COM=" VVER 1000 MODIFIED GT/IT - TOP HALF "
ZHEMICYL+Y  3  1    0.4710                                  44.34 0.0
ZHEMICYL+Y  2  1    0.5400                                  44.34 0.0
CUBOID      3  1    0.55209  -0.55209   0.63750   0.00000   44.34 0.0

UNIT 5
COM=" EMPTY WATER CELL - TOP OR BOTTOM HALF "
CUBOID      3  1    0.55209  -0.55209   0.63750   0.00000   44.34 0.0

UNIT 6
COM=" VVER 1000 MODIFIED GT/IT - BOTTOM HALF WITH WABA"
ZHEMICYL-Y  3  1    0.28575                                 137.16 0.0
ZHEMICYL-Y  2  1    0.33909                                 137.16 0.0
ZHEMICYL-Y  0  1    0.35306                                 137.16 0.0
ZHEMICYL-Y  7  1    0.40386                                 137.16 0.0
ZHEMICYL-Y  0  1    0.41783                                 137.16 0.0
ZHEMICYL-Y  2  1    0.48387                                 137.16 0.0
CUBOID      3  1    0.55209  -0.55209   0.00000  -0.63750   137.16 0.0

UNIT 7
COM=" VVER 1000 MODIFIED GT/IT - TOP HALF WITH WABA"
ZHEMICYL+Y  3  1    0.28575                                 137.16 0.0
ZHEMICYL+Y  2  1    0.33909                                 137.16 0.0
ZHEMICYL+Y  0  1    0.35306                                 137.16 0.0
ZHEMICYL+Y  7  1    0.40386                                 137.16 0.0
ZHEMICYL+Y  0  1    0.41783                                 137.16 0.0
ZHEMICYL+Y  2  1    0.48387                                 137.16 0.0
CUBOID      3  1    0.55209  -0.55209   0.63750   0.00000   137.16 0.0

UNIT 8
COM=" 17OFA FUEL ROD (NO BA) - BOTTOM HALF "
ZHEMICYL-Y  1  1    0.392176                                137.16 0.0
ZHEMICYL-Y  0  1    0.40005                                 137.16 0.0
ZHEMICYL-Y  2  1    0.45720                                 137.16 0.0
CUBOID      3  1    0.55209  -0.55209   0.00000  -0.63750   137.16 0.0
```

**Table 6-3-11 Listing of KENO Input for Type C Assembly With Additional WABA Absorbers (cont.)**

```
UNIT 9
COM=" 17OFA FUEL ROD (NO BA) - TOP HALF "
ZHEMICYL+Y  1  1    0.392176                                137.16 0.0
ZHEMICYL+Y  0  1    0.40005                                 137.16 0.0
ZHEMICYL+Y  2  1    0.45720                                 137.16 0.0
CUBOID      3  1    0.55209  -0.55209   0.63750   0.00000   137.16 0.0

UNIT 10
COM=" VVER 1000 MODIFIED GT/IT - BOTTOM HALF "
ZHEMICYL-Y  3  1    0.4710                                  137.16 0.0
ZHEMICYL-Y  2  1    0.5400                                  137.16 0.0
CUBOID      3  1    0.55209  -0.55209   0.00000  -0.63750   137.16 0.0

UNIT 11
COM=" VVER 1000 MODIFIED GT/IT - TOP HALF "
ZHEMICYL+Y  3  1    0.4710                                  137.16 0.0
ZHEMICYL+Y  2  1    0.5400                                  137.16 0.0
CUBOID      3  1    0.55209  -0.55209   0.63750   0.00000   137.16 0.0

UNIT 12
COM=" EMPTY WATER CELL - TOP OR BOTTOM HALF "
CUBOID      3  1    0.55209  -0.55209   0.63750   0.00000   137.16 0.0

UNIT 13
COM=" BOTTOM EDGE OF CS STRONGBACK "
CUBOID      4  1   24.95550   0.0       0.0      -0.45720   181.50 0.0

UNIT 14
COM=" VERTICAL EDGE OF CS STRONGBACK "
CUBOID      4  1    0.0      -0.45720  24.13000  -0.45720   181.50 0.0

UNIT 15
COM=" VERTICAL GADOLINIA ABSORBER PANEL "
CUBOID      6  1    0.04445  -0.04445  18.41500   0.0       181.50 0.0
CUBOID      5  1    0.05461  -0.05461  18.41500   0.0       181.50 0.0

UNIT 16
COM=" ONE-SIDED PART-LENGTH GD PANEL UNDER STRONGBACK "
CUBOID      6  1   23.49500   0.0       0.0      -0.08890   33.02 0.0
CUBOID      5  1   23.49500   0.0       0.0      -0.09906   33.02 0.0

UNIT 17
COM=" GAP IN PART-LENGTH GD PANEL UNDER STRONGBACK "
CUBOID      3  1   23.49500   0.0       0.0      -0.09906    5.08 0.0

UNIT 18
COM=" HORIZONTAL GAD ABSORBER PLATE"
ARRAY 2             0.0                -0.09906                0.0

GLOBAL

UNIT 20
COM=" VVER 1000 ASSEMBLY IN CASK "
ARRAY 1             0.0                 1.37160                0.0
CUBOID      3  1   41.73728  -2.99720  38.30660 -38.10000  196.74 0.0
```

**Table 6-3-11 Listing of KENO Input for Type C Assembly With Additional WABA Absorbers (cont.)**

```
HOLE 13    0.0        0.0        0.0
HOLE 14    0.0        0.0        0.0
HOLE 15   -0.85344    0.81280    0.0
HOLE 18    0.0       -0.457205   0.0

REPLICATE   4  1  0.22606 0.0  0.22606 0.22606 0.22606 0.0 1 END GEOM

READ ARRAY
ARA=1 NUX=21 NUY=42 NUZ=2 COM=" VVER 1000 ASSEMBLY IN H2O"
LOOP
 1   1  21   1     1  42   1     2   2   1
 2   2  20   2     1  41   2     2   2   1
 2   1  21   2     2  42   2     2   2   1
 3   5   5   1    21  21   1     2   2   1
 4   5   5   1    22  22   1     2   2   1
 3   6   6   1    16  26  10     2   2   1
 4   6   6   1    17  27  10     2   2   1
 3   8   8   1    12  20   8     2   2   1
 4   8   8   1    13  21   8     2   2   1
 3   8   8   1    30  30   1     2   2   1
 4   8   8   1    31  31   1     2   2   1
 3   9   9   1    25  25   1     2   2   1
 4   9   9   1    26  26   1     2   2   1
 3  10  10   1    16  16   1     2   2   1
 4  10  10   1    17  17   1     2   2   1
 3  11  11   1    11  31  10     2   2   1
 4  11  11   1    12  32  10     2   2   1
 3  12  12   1    26  26   1     2   2   1
 4  12  12   1    27  27   1     2   2   1
 3  13  13   1    17  17   1     2   2   1
 4  13  13   1    18  18   1     2   2   1
 3  14  14   1    12  22  10     2   2   1
 4  14  14   1    13  23  10     2   2   1
 3  14  14   1    30  30   1     2   2   1
 4  14  14   1    31  31   1     2   2   1
 3  16  16   1    16  26  10     2   2   1
 4  16  16   1    17  27  10     2   2   1
 3  17  17   1    21  21  10     2   2   1
 4  17  17   1    22  22  10     2   2   1
 5   1  10   1     1  42  41     2   2   1
 5   1   9   1     2  41  39     2   2   1
 5   1   8   1     3  40  37     2   2   1
 5   1   7   1     4  39  35     2   2   1
 5   1   6   1     5  38  33     2   2   1
 5   1   5   1     6  37  31     2   2   1
 5   1   4   1     7  36  29     2   2   1
 5   1   3   1     8  35  27     2   2   1
 5   1   2   1     9  34  25     2   2   1
 5   1   1   1    10  33  23     2   2   1
 5  12  21   1     1  42  41     2   2   1
 5  13  21   1     2  41  39     2   2   1
 5  14  21   1     3  40  37     2   2   1
 5  15  21   1     4  39  35     2   2   1
 5  16  21   1     5  38  33     2   2   1
 5  17  21   1     6  37  31     2   2   1
 5  18  21   1     7  36  29     2   2   1
```

**Table 6-3-11 (cont.) Listing of KENO Input for Type C Assembly With Additional WABA Absorbers**

| | | | | | | | | | |
|---|---|---|---|---|---|---|---|---|---|
| 5 | 19 | 21 | 1 | 8 | 35 | 27 | 2 | 2 | 1 |
| 5 | 20 | 21 | 1 | 9 | 34 | 25 | 2 | 2 | 1 |
| 5 | 21 | 21 | 1 | 10 | 33 | 23 | 2 | 2 | 1 |
| 8 | 1 | 21 | 1 | 1 | 42 | 1 | 1 | 1 | 1 |
| 9 | 2 | 20 | 2 | 1 | 41 | 2 | 1 | 1 | 1 |
| 9 | 1 | 21 | 2 | 2 | 42 | 2 | 1 | 1 | 1 |
| 10 | 5 | 5 | 1 | 21 | 21 | 1 | 1 | 1 | 1 |
| 11 | 5 | 5 | 1 | 22 | 22 | 1 | 1 | 1 | 1 |
| 10 | 6 | 6 | 1 | 16 | 26 | 10 | 1 | 1 | 1 |
| 11 | 6 | 6 | 1 | 17 | 27 | 10 | 1 | 1 | 1 |
| 10 | 8 | 8 | 1 | 12 | 20 | 8 | 1 | 1 | 1 |
| 11 | 8 | 8 | 1 | 13 | 21 | 8 | 1 | 1 | 1 |
| 10 | 8 | 8 | 1 | 30 | 30 | 1 | 1 | 1 | 1 |
| 11 | 8 | 8 | 1 | 31 | 31 | 1 | 1 | 1 | 1 |
| 10 | 9 | 9 | 1 | 25 | 25 | 1 | 1 | 1 | 1 |
| 11 | 9 | 9 | 1 | 26 | 26 | 1 | 1 | 1 | 1 |
| 10 | 10 | 10 | 1 | 16 | 16 | 1 | 1 | 1 | 1 |
| 11 | 10 | 10 | 1 | 17 | 17 | 1 | 1 | 1 | 1 |
| 10 | 11 | 11 | 1 | 11 | 31 | 10 | 1 | 1 | 1 |
| 11 | 11 | 11 | 1 | 12 | 32 | 10 | 1 | 1 | 1 |
| 10 | 12 | 12 | 1 | 26 | 26 | 1 | 1 | 1 | 1 |
| 11 | 12 | 12 | 1 | 27 | 27 | 1 | 1 | 1 | 1 |
| 10 | 13 | 13 | 1 | 17 | 17 | 1 | 1 | 1 | 1 |
| 11 | 13 | 13 | 1 | 18 | 18 | 1 | 1 | 1 | 1 |
| 10 | 14 | 14 | 1 | 12 | 22 | 10 | 1 | 1 | 1 |
| 11 | 14 | 14 | 1 | 13 | 23 | 10 | 1 | 1 | 1 |
| 10 | 14 | 14 | 1 | 30 | 30 | 1 | 1 | 1 | 1 |
| 11 | 14 | 14 | 1 | 31 | 31 | 1 | 1 | 1 | 1 |
| 10 | 16 | 16 | 1 | 16 | 26 | 10 | 1 | 1 | 1 |
| 11 | 16 | 16 | 1 | 17 | 27 | 10 | 1 | 1 | 1 |
| 10 | 17 | 17 | 1 | 21 | 21 | 10 | 1 | 1 | 1 |
| 11 | 17 | 17 | 1 | 22 | 22 | 10 | 1 | 1 | 1 |
| 12 | 1 | 10 | 1 | 1 | 42 | 41 | 1 | 1 | 1 |
| 12 | 1 | 9 | 1 | 2 | 41 | 39 | 1 | 1 | 1 |
| 12 | 1 | 8 | 1 | 3 | 40 | 37 | 1 | 1 | 1 |
| 12 | 1 | 7 | 1 | 4 | 39 | 35 | 1 | 1 | 1 |
| 12 | 1 | 6 | 1 | 5 | 38 | 33 | 1 | 1 | 1 |
| 12 | 1 | 5 | 1 | 6 | 37 | 31 | 1 | 1 | 1 |
| 12 | 1 | 4 | 1 | 7 | 36 | 29 | 1 | 1 | 1 |
| 12 | 1 | 3 | 1 | 8 | 35 | 27 | 1 | 1 | 1 |
| 12 | 1 | 2 | 1 | 9 | 34 | 25 | 1 | 1 | 1 |
| 12 | 1 | 1 | 1 | 10 | 33 | 23 | 1 | 1 | 1 |
| 12 | 12 | 21 | 1 | 1 | 42 | 41 | 1 | 1 | 1 |
| 12 | 13 | 21 | 1 | 2 | 41 | 39 | 1 | 1 | 1 |
| 12 | 14 | 21 | 1 | 3 | 40 | 37 | 1 | 1 | 1 |
| 12 | 15 | 21 | 1 | 4 | 39 | 35 | 1 | 1 | 1 |
| 12 | 16 | 21 | 1 | 5 | 38 | 33 | 1 | 1 | 1 |
| 12 | 17 | 21 | 1 | 6 | 37 | 31 | 1 | 1 | 1 |
| 12 | 18 | 21 | 1 | 7 | 36 | 29 | 1 | 1 | 1 |
| 12 | 19 | 21 | 1 | 8 | 35 | 27 | 1 | 1 | 1 |
| 12 | 20 | 21 | 1 | 9 | 34 | 25 | 1 | 1 | 1 |
| 12 | 21 | 21 | 1 | 10 | 33 | 23 | 1 | 1 | 1 |
| 6 | 10 | 10 | 1 | 16 | 16 | 1 | 1 | 1 | 1 |
| 7 | 10 | 10 | 1 | 17 | 17 | 1 | 1 | 1 | 1 |
| 6 | 13 | 13 | 1 | 17 | 17 | 1 | 1 | 1 | 1 |
| 7 | 13 | 13 | 1 | 18 | 18 | 1 | 1 | 1 | 1 |
| 6 | 9 | 9 | 1 | 25 | 25 | 1 | 1 | 1 | 1 |

**Table 6-3-11 Listing of KENO Input for Type CA Assembly With Additional WABA Absorbers (cont.)**

```
 7   9   9   1    26  26   1     1   1   1
 6  12  12   1    26  26   1     1   1   1
 7  12  12   1    27  27   1     1   1   1
END LOOP
ARA=2 NUX=1  NUY=1  NUZ=11 COM=" HORIZONTAL GAD ABSORBER PLATE WITH GAPS"
FILL
 17 16 17 17 16 17 17 16 17 17 16
END FILL
END ARRAY

READ BOUNDS
ALL=SPECULAR
END BOUNDS

READ PLOT
  TTL='MAT SLICE THROUGH ASSEMBLY ARRAY - RCCA ZONE'
  PIC=MAT
  NCH='0.ZWSGSRS'
  XUL= -1.0     YUL= 28.147   ZUL= 15.0
  XLR= 24.00    YLR= 0.00     ZLR= 15.0
  UAX=1.0    VDN=-1.0   NAX=130
END
  TTL='MAT SLICE THROUGH ASSEMBLY ARRAY'
  PIC=MAT
  NCH='0.ZWSGSRS'
  XUL= -1.0     YUL= 28.147   ZUL= 140.0
  XLR= 24.00    YLR= 0.00     ZLR= 140.0
  UAX=1.0    VDN=-1.0   NAX=130
END
  TTL='MAT SLICE THROUGH CASK MODEL '
  PIC=MAT
  NCH='0.ZWSGSRS'
  XUL= -3.00    YUL= 39.00    ZUL= 15.0
  XLR= 42.0     YLR=-39.00    ZLR= 15.0
  UAX=1.0    VDN=-1.0   NAX=130
END PLOT

END DATA
```

**Table 6-3-12 Listing of KENO Input for Type C Assembly With Additional Ag-In-Cd Absorbers**

```
TITLE-MC4 5.0 W/O VVER-1000 CASK IN 3D WITH 4 RCCA RODS

READ PARAMETERS
  TME=6      RUN=YES    PLT=YES
  GEN=900    NPG=300    NSK=005    LIB=41
  XS1=YES    NUB=YES
END PARAMETERS

READ MIXT  SCT=2
MIX= 1
'  UO2 PELLET 5.00 W/O (96.5% TD, 0% DISH)
           192235      0.0011942
           192238      0.022404
            18016      0.047196
MIX= 2
'  ZIRC FUEL ROD CLADDING
           240302      0.043326
MIX= 3
'  H2O AT 1.00 G/CC
            31001      0.066854
            38016      0.033427
MIX= 4
'  CARBON STEEL FOR STRONGBACK & SHELL
            36012      4.728898E-4
           315031      5.807008E-5
           316032      6.642906E-5
           325055      3.877064E-4
           326000      8.420119E-2
MIX= 5
'  GADOLINIA OXIDE ABSORBER (0.02 GM GD2O3/CM2 @ 0.01016 CM THICKNESS)
            48016      9.810529E-3
           464152      1.308071E-5
           464154      1.373474E-4
           464155      9.679722E-4
           464156      1.347313E-3
           464157      1.026835E-3
           464158      1.622008E-3
           464160      1.425792E-3
MIX= 6
'  CARBON STEEL SHEET FOR GD ABSORBER
            56012      4.728898E-4
           515031      5.807008E-5
           516032      6.642906E-5
           525055      3.877064E-4
           526000      8.420119E-2
MIX= 7
'  AG-IN-CD RCCA MATERIAL (MIN AG*0.75, MIN IN*0.75, MIN CD*0.75)
           847107      0.017551
           847109      0.016305
           848000      0.001941
           849113      0.000254
           849115      0.005648
MIX= 8
'  STAINLESS STELL CLADDING FOR RCCA
           324000      0.017386
           525055      0.001732
           326000      0.058019
           328000      0.008142
END MIXT
```

**Table 6-3-12 Listing of KENO Input for Type C Assembly With Additional Ag-In-Cd Absorbers (cont.)**

```
READ GEOMETRY

UNIT 1
COM=" 17OFA FUEL ROD (NOBA) - BOTTOM HALF "
ZHEMICYL-Y  1  1    0.392176                                44.34 0.0
ZHEMICYL-Y  0  1    0.40005                                 44.34 0.0
ZHEMICYL-Y  2  1    0.45720                                 44.34 0.0
CUBOID      3  1    0.55209  -0.55209   0.00000  -0.63750   44.34 0.0

UNIT 2
COM=" 17OFA FUEL ROD (NOBA) - TOP HALF "
ZHEMICYL+Y  1  1    0.392176                                44.34 0.0
ZHEMICYL+Y  0  1    0.40005                                 44.34 0.0
ZHEMICYL+Y  2  1    0.45720                                 44.34 0.0
CUBOID      3  1    0.55209  -0.55209   0.63750   0.00000   44.34 0.0

UNIT 3
COM=" VVER 1000 MODIFIED GT/IT - BOTTOM HALF "
ZHEMICYL-Y  3  1    0.4710                                  44.34 0.0
ZHEMICYL-Y  2  1    0.5400                                  44.34 0.0
CUBOID      3  1    0.55209  -0.55209   0.00000  -0.63750   44.34 0.0

UNIT 4
COM=" VVER 1000 MODIFIED GT/IT - TOP HALF "
ZHEMICYL+Y  3  1    0.4710                                  44.34 0.0
ZHEMICYL+Y  2  1    0.5400                                  44.34 0.0
CUBOID      3  1    0.55209  -0.55209   0.63750   0.00000   44.34 0.0

UNIT 5
COM=" EMPTY WATER CELL - TOP OR BOTTOM HALF "
CUBOID      3  1    0.55209  -0.55209   0.63750   0.00000   44.34 0.0

UNIT 6
COM=" VVER 1000 MODIFIED GT/IT - BOTTOM HALF WITH AG-IN-CD RCCA INSIDE"
ZHEMICYL-Y  7  1    0.41783                                 137.16 0.0
ZHEMICYL-Y  0  1    0.42164                                 137.16 0.0
ZHEMICYL-Y  8  1    0.46609                                 137.16 0.0
ZHEMICYL-Y  3  1    0.4710                                  137.16 0.0
ZHEMICYL-Y  2  1    0.5400                                  137.16 0.0
CUBOID      3  1    0.55209  -0.55209   0.00000  -0.63750   137.16 0.0

UNIT 7
COM=" VVER 1000 MODIFIED GT/IT - TOP HALF WITH AG-IN-CD RCCA INSIDE"
ZHEMICYL+Y  7  1    0.41783                                 137.16 0.0
ZHEMICYL+Y  0  1    0.42164                                 137.16 0.0
ZHEMICYL+Y  8  1    0.46609                                 137.16 0.0
ZHEMICYL+Y  3  1    0.4710                                  137.16 0.0
ZHEMICYL+Y  2  1    0.5400                                  137.16 0.0
CUBOID      3  1    0.55209  -0.55209   0.63750   0.00000   137.16 0.0

UNIT 8
COM=" 17OFA FUEL ROD (NO BA) - BOTTOM HALF "
ZHEMICYL-Y  1  1    0.392176                                137.16 0.0
ZHEMICYL-Y  0  1    0.40005                                 137.16 0.0
ZHEMICYL-Y  2  1    0.45720                                 137.16 0.0
CUBOID      3  1    0.55209  -0.55209   0.00000  -0.63750   137.16 0.0
```

**Table 6-3-12 Listing of KENO Input for Type C Assembly With Additional Ag-In-Cd Absorbers (cont.)**

```
UNIT 9
COM=" 17OFA FUEL ROD (NO BA) - TOP HALF "
ZHEMICYL+Y  1  1    0.392176                                  137.16 0.0
ZHEMICYL+Y  0  1    0.40005                                   137.16 0.0
ZHEMICYL+Y  2  1    0.45720                                   137.16 0.0
CUBOID      3  1    0.55209  -0.55209   0.63750   0.00000    137.16 0.0

UNIT 10
COM=" VVER 1000 MODIFIED GT/IT - BOTTOM HALF "
ZHEMICYL-Y  3  1    0.4710                                    137.16 0.0
ZHEMICYL-Y  2  1    0.5400                                    137.16 0.0
CUBOID      3  1    0.55209  -0.55209   0.00000  -0.63750    137.16 0.0

UNIT 11
COM=" VVER 1000 MODIFIED GT/IT - TOP HALF "
ZHEMICYL+Y  3  1    0.4710                                    137.16 0.0
ZHEMICYL+Y  2  1    0.5400                                    137.16 0.0
CUBOID      3  1    0.55209  -0.55209   0.63750   0.00000    137.16 0.0

UNIT 12
COM=" EMPTY WATER CELL - TOP OR BOTTOM HALF "
CUBOID      3  1    0.55209  -0.55209   0.63750   0.00000    137.16 0.0

UNIT 13
COM=" BOTTOM EDGE OF CS STRONGBACK "
CUBOID      4  1   24.95550   0.0       0.0      -0.45720    181.5  0.0

UNIT 14
COM=" VERTICAL EDGE OF CS STRONGBACK "
CUBOID      4  1    0.0      -0.45720  24.13000  -0.45720    181.5  0.0

UNIT 15
COM=" VERTICAL GADOLINIA ABSORBER PANEL "
CUBOID      6  1    0.04445  -0.04445  18.41500   0.0        181.5  0.0
CUBOID      5  1    0.05461  -0.05461  18.41500   0.0        181.5  0.0

UNIT 16
COM=" ONE-SIDED PART-LENGTH GD PANEL UNDER STRONGBACK "
CUBOID      6  1   23.49500   0.0       0.0      -0.08890    33.02 0.0
CUBOID      5  1   23.49500   0.0       0.0      -0.09906    33.02 0.0

UNIT 17
COM=" GAP IN PART-LENGTH GD PANEL UNDER STRONGBACK "
CUBOID      3  1   23.49500   0.0       0.0      -0.09906     5.08 0.0
UNIT 18
COM=" HORIZONTAL GAD ABSORBER PLATE"
ARRAY 2             0.0                -0.09906                0.0

GLOBAL

UNIT 20
COM=" VVER 1000 ASSEMBLY IN CASK "
ARRAY 1             0.0                 1.37160                0.0
CUBOID      3  1   41.73728  -2.99720  38.30660 -38.10000  196.74 0.0

HOLE 13   0.0       0.0       0.0
HOLE 14   0.0       0.0       0.0
```

**Table 6-3-12 Listing of KENO Input for Type C Assembly With Additional Ag-In-Cd Absorbers (cont.)**

```
HOLE 15  -0.85344   0.81280   0.0
HOLE 18   0.0      -0.457205  0.0

REPLICATE   4  1  0.22606 0.0  0.22606 0.22606 0.22606 0.0 1 END GEOM

READ ARRAY
ARA=1 NUX=21 NUY=42 NUZ=2 COM=" VVER 1000 ASSEMBLY IN H2O"
LOOP
 1   1  21   1     1  42   1     2   2   1
 2   2  20   2     1  41   2     2   2   1
 2   1  21   2     2  42   2     2   2   1
 3   5   5   1    21  21   1     2   2   1
 4   5   5   1    22  22   1     2   2   1
 3   6   6   1    16  26  10     2   2   1
 4   6   6   1    17  27  10     2   2   1
 3   8   8   1    12  20   8     2   2   1
 4   8   8   1    13  21   8     2   2   1
 3   8   8   1    30  30   1     2   2   1
 4   8   8   1    31  31   1     2   2   1
 3   9   9   1    25  25   1     2   2   1
 4   9   9   1    26  26   1     2   2   1
 3  10  10   1    16  16   1     2   2   1
 4  10  10   1    17  17   1     2   2   1
 3  11  11   1    11  31  10     2   2   1
 4  11  11   1    12  32  10     2   2   1
 3  12  12   1    26  26   1     2   2   1
 4  12  12   1    27  27   1     2   2   1
 3  13  13   1    17  17   1     2   2   1
 4  13  13   1    18  18   1     2   2   1
 3  14  14   1    12  22  10     2   2   1
 4  14  14   1    13  23  10     2   2   1
 3  14  14   1    30  30   1     2   2   1
 4  14  14   1    31  31   1     2   2   1
 3  16  16   1    16  26  10     2   2   1
 4  16  16   1    17  27  10     2   2   1
 3  17  17   1    21  21  10     2   2   1
 4  17  17   1    22  22  10     2   2   1
 5   1  10   1     1  42  41     2   2   1
 5   1   9   1     2  41  39     2   2   1
 5   1   8   1     3  40  37     2   2   1
 5   1   7   1     4  39  35     2   2   1
 5   1   6   1     5  38  33     2   2   1
 5   1   5   1     6  37  31     2   2   1
 5   1   4   1     7  36  29     2   2   1
 5   1   3   1     8  35  27     2   2   1
 5   1   2   1     9  34  25     2   2   1
 5   1   1   1    10  33  23     2   2   1
 5  12  21   1     1  42  41     2   2   1
 5  13  21   1     2  41  39     2   2   1
 5  14  21   1     3  40  37     2   2   1
 5  15  21   1     4  39  35     2   2   1
 5  16  21   1     5  38  33     2   2   1
 5  17  21   1     6  37  31     2   2   1
 5  18  21   1     7  36  29     2   2   1
 5  19  21   1     8  35  27     2   2   1
 5  20  21   1     9  34  25     2   2   1
 5  21  21   1    10  33  23     2   2   1
```

**Table 6-3-12 (cont.) Listing of KENO Input for Type C Assembly With Additional Ag-In-Cd Absorbers**

| | | | | | | | | | |
|---|---|---|---|---|---|---|---|---|---|
| 8 | 1 | 21 | 1 | 1 | 42 | 1 | 1 | 1 | 1 |
| 9 | 2 | 20 | 2 | 1 | 41 | 2 | 1 | 1 | 1 |
| 9 | 1 | 21 | 2 | 2 | 42 | 2 | 1 | 1 | 1 |
| 10 | 5 | 5 | 1 | 21 | 21 | 1 | 1 | 1 | 1 |
| 11 | 5 | 5 | 1 | 22 | 22 | 1 | 1 | 1 | 1 |
| 10 | 6 | 6 | 1 | 16 | 26 | 10 | 1 | 1 | 1 |
| 11 | 6 | 6 | 1 | 17 | 27 | 10 | 1 | 1 | 1 |
| 10 | 8 | 8 | 1 | 12 | 20 | 8 | 1 | 1 | 1 |
| 11 | 8 | 8 | 1 | 13 | 21 | 8 | 1 | 1 | 1 |
| 10 | 8 | 8 | 1 | 30 | 30 | 1 | 1 | 1 | 1 |
| 11 | 8 | 8 | 1 | 31 | 31 | 1 | 1 | 1 | 1 |
| 10 | 9 | 9 | 1 | 25 | 25 | 1 | 1 | 1 | 1 |
| 11 | 9 | 9 | 1 | 26 | 26 | 1 | 1 | 1 | 1 |
| 10 | 10 | 10 | 1 | 16 | 16 | 1 | 1 | 1 | 1 |
| 11 | 10 | 10 | 1 | 17 | 17 | 1 | 1 | 1 | 1 |
| 10 | 11 | 11 | 1 | 11 | 31 | 10 | 1 | 1 | 1 |
| 11 | 11 | 11 | 1 | 12 | 32 | 10 | 1 | 1 | 1 |
| 10 | 12 | 12 | 1 | 26 | 26 | 1 | 1 | 1 | 1 |
| 11 | 12 | 12 | 1 | 27 | 27 | 1 | 1 | 1 | 1 |
| 10 | 13 | 13 | 1 | 17 | 17 | 1 | 1 | 1 | 1 |
| 11 | 13 | 13 | 1 | 18 | 18 | 1 | 1 | 1 | 1 |
| 10 | 14 | 14 | 1 | 12 | 22 | 10 | 1 | 1 | 1 |
| 11 | 14 | 14 | 1 | 13 | 23 | 10 | 1 | 1 | 1 |
| 10 | 14 | 14 | 1 | 30 | 30 | 1 | 1 | 1 | 1 |
| 11 | 14 | 14 | 1 | 31 | 31 | 1 | 1 | 1 | 1 |
| 10 | 16 | 16 | 1 | 16 | 26 | 10 | 1 | 1 | 1 |
| 11 | 16 | 16 | 1 | 17 | 27 | 10 | 1 | 1 | 1 |
| 10 | 17 | 17 | 1 | 21 | 21 | 10 | 1 | 1 | 1 |
| 11 | 17 | 17 | 1 | 22 | 22 | 10 | 1 | 1 | 1 |
| 12 | 1 | 10 | 1 | 1 | 42 | 41 | 1 | 1 | 1 |
| 12 | 1 | 9 | 1 | 2 | 41 | 39 | 1 | 1 | 1 |
| 12 | 1 | 8 | 1 | 3 | 40 | 37 | 1 | 1 | 1 |
| 12 | 1 | 7 | 1 | 4 | 39 | 35 | 1 | 1 | 1 |
| 12 | 1 | 6 | 1 | 5 | 38 | 33 | 1 | 1 | 1 |
| 12 | 1 | 5 | 1 | 6 | 37 | 31 | 1 | 1 | 1 |
| 12 | 1 | 4 | 1 | 7 | 36 | 29 | 1 | 1 | 1 |
| 12 | 1 | 3 | 1 | 8 | 35 | 27 | 1 | 1 | 1 |
| 12 | 1 | 2 | 1 | 9 | 34 | 25 | 1 | 1 | 1 |
| 12 | 1 | 1 | 1 | 10 | 33 | 23 | 1 | 1 | 1 |
| 12 | 12 | 21 | 1 | 1 | 42 | 41 | 1 | 1 | 1 |
| 12 | 13 | 21 | 1 | 2 | 41 | 39 | 1 | 1 | 1 |
| 12 | 14 | 21 | 1 | 3 | 40 | 37 | 1 | 1 | 1 |
| 12 | 15 | 21 | 1 | 4 | 39 | 35 | 1 | 1 | 1 |
| 12 | 16 | 21 | 1 | 5 | 38 | 33 | 1 | 1 | 1 |
| 12 | 17 | 21 | 1 | 6 | 37 | 31 | 1 | 1 | 1 |
| 12 | 18 | 21 | 1 | 7 | 36 | 29 | 1 | 1 | 1 |
| 12 | 19 | 21 | 1 | 8 | 35 | 27 | 1 | 1 | 1 |
| 12 | 20 | 21 | 1 | 9 | 34 | 25 | 1 | 1 | 1 |
| 12 | 21 | 21 | 1 | 10 | 33 | 23 | 1 | 1 | 1 |
| 6 | 10 | 10 | 1 | 16 | 16 | 1 | 1 | 1 | 1 |
| 7 | 10 | 10 | 1 | 17 | 17 | 1 | 1 | 1 | 1 |
| 6 | 13 | 13 | 1 | 17 | 17 | 1 | 1 | 1 | 1 |
| 7 | 13 | 13 | 1 | 18 | 18 | 1 | 1 | 1 | 1 |
| 6 | 9 | 9 | 1 | 25 | 25 | 1 | 1 | 1 | 1 |
| 7 | 9 | 9 | 1 | 26 | 26 | 1 | 1 | 1 | 1 |
| 6 | 12 | 12 | 1 | 26 | 26 | 1 | 1 | 1 | 1 |
| 7 | 12 | 12 | 1 | 27 | 27 | 1 | 1 | 1 | 1 |

**Table 6-3-12 Listing of KENO Input for Type C Assembly With Additional Ag-In-Cd Absorbers (cont.)**

```
END LOOP
ARA=2 NUX=1  NUY=1  NUZ=11 COM=" HORIZONTAL GAD ABSORBER PLATE WITH GAPS"
FILL
 17 16 17 17 16 17 17 16 17 17 16
END FILL
END ARRAY

READ BOUNDS
ALL=SPECULAR
END BOUNDS

READ PLOT
  TTL='MAT SLICE THROUGH ASSEMBLY ARRAY - RCCA ZONE'
  PIC=MAT
  NCH='0.ZWSGSRS'
  XUL= -1.0     YUL= 28.147   ZUL= 15.0
  XLR= 24.00    YLR= 0.00     ZLR= 15.0
  UAX=1.0    VDN=-1.0   NAX=130
END
  TTL='MAT SLICE THROUGH ASSEMBLY ARRAY'
  PIC=MAT
  NCH='0.ZWSGSRS'
  XUL= -1.0     YUL= 28.147   ZUL= 140.0
  XLR= 24.00    YLR= 0.00     ZLR= 140.0
  UAX=1.0    VDN=-1.0   NAX=130
END
  TTL='MAT SLICE THROUGH CASK MODEL '
  PIC=MAT
  NCH='0.ZWSGSRS'
  XUL= -3.00    YUL= 39.00    ZUL= 15.0
  XLR= 42.0     YLR=-39.00    ZLR= 15.0
  UAX=1.0    VDN=-1.0   NAX=130
END PLOT

END DATA
```

**Table 6-3-13 Listing of KENO Input for Type C Assembly With Additional GD Coated Guide Supports**

```
KENOVA,STMFN.
JOB,JN=KENO,US=NAWDN,T=599,CL=SEQ1.
ACCOUNT,AC=NF02918,UPW=XXXXXXX.
**
DEST,DN=  $OUT,AD=W3W,NM=NEWMYER,TT='VVER-1000 CASK AT 5.0 W/O GUIDE ABSORBER'.
DEST,DN=FILMPR,AD=W3W,NM=NEWMYER,TT='VVER-1000 CASK AT 5.0 W/O GUIDE ABSORBER'.
**
**     ** ATTACH WORKING LIBRARY **
**
ATTACH,DN=WORKLIB,PDN=CASKVVER1000X01,ID=NACRIT.
**
**     ** ATTACH KENOVa CODE **
**
ATTACH,DN=KENO5A,PDN=KENO5A.
**
**     ** REWIND INPUT AND COPY TO OUTPUT **
**
REWIND(DN=$IN)
COPYSD(I=$IN,O=$OUT)
REWIND(DN=$IN)
**
**     ** EXECUTE KENOVa **
**
KENO5A.
**
EXIT,U.
**
**     ** REWIND OUTPUT AND COPY TO FILMPR **
**
REWIND(DN=$OUT)
COPYD(I=$OUT,O=FILMPR)
**
(EOR)
TITLE-MC4 5.0 W/O VVER-1000 CASK WITH GUIDE ABSORBER

READ PARAMETERS
  TME=6      RUN=YES    PLT=YES
  GEN=900    NPG=305    NSK=005    LIB=41
  XS1=YES    NUB=YES
END PARAMETERS

READ MIXT  SCT=2
MIX= 1
'  UO2 PELLET 5.00 W/O (96.5% TD, 0% DISH)
           192235      0.0011942
           192238      0.022404
            18016      0.047196
MIX= 2
'  ZIRC FUEL ROD CLADDING
           240302      0.043326
MIX= 3
'  H2O AT 1.00 G/CC
            31001      0.066854
            38016      0.033427
```

**Table 6-3-13 Listing of KENO Input for Type C Assembly With Additional GD Coated Guide Supports (cont.)**

```
MIX= 4
'  CARBON STEEL FOR STRONGBACK & SHELL
           36012      4.728898E-4
          315031      5.807008E-5
          316032      6.642906E-5
          325055      3.877064E-4
          326000      8.420119E-2
MIX= 5
'  GADOLINIA OXIDE ABSORBER (0.02 GM GD2O3/CM2 @ 0.01016 CM THICKNESS)
           48016      9.810529E-3
          464152      1.308071E-5
          464154      1.373474E-4
          464155      9.679722E-4
          464156      1.347313E-3
          464157      1.026835E-3
          464158      1.622008E-3
          464160      1.425792E-3
MIX= 6
'  CARBON STEEL SHEET FOR GD ABSORBER
           56012      4.728898E-4
          515031      5.807008E-5
          516032      6.642906E-5
          525055      3.877064E-4
          526000      8.420119E-2
END MIXT

READ GEOMETRY

UNIT 1
COM=" 17OFA FUEL ROD (GAD GUIDE PLATE) - BOTTOM HALF "
ZHEMICYL-Y  1  1    0.392176                                19.05 0.0
ZHEMICYL-Y  0  1    0.40005                                 19.05 0.0
ZHEMICYL-Y  2  1    0.45720                                 19.05 0.0
CUBOID      3  1    0.55209  -0.55209   0.00000  -0.63750   19.05 0.0

UNIT 2
COM=" 17OFA FUEL ROD (GAD GUIDE PLATE) - TOP HALF "
ZHEMICYL+Y  1  1    0.392176                                19.05 0.0
ZHEMICYL+Y  0  1    0.40005                                 19.05 0.0
ZHEMICYL+Y  2  1    0.45720                                 19.05 0.0
CUBOID      3  1    0.55209  -0.55209   0.63750   0.00000   19.05 0.0

UNIT 3
COM=" VVER 1000 MODIFIED GT/IT - BOTTOM HALF "
ZHEMICYL-Y  3  1    0.4710                                  19.05 0.0
ZHEMICYL-Y  2  1    0.5400                                  19.05 0.0
CUBOID      3  1    0.55209  -0.55209   0.00000  -0.63750   19.05 0.0

UNIT 4
COM=" VVER 1000 MODIFIED GT/IT - TOP HALF "
ZHEMICYL+Y  3  1    0.4710                                  19.05 0.0
ZHEMICYL+Y  2  1    0.5400                                  19.05 0.0
CUBOID      3  1    0.55209  -0.55209   0.63750   0.00000   19.05 0.0

UNIT 5
COM=" EMPTY WATER CELL - TOP OR BOTTOM HALF "
CUBOID      3  1    0.55209  -0.55209   0.63750   0.00000   19.05 0.0
```

**Table 6-3-13 Listing of KENO Input for Type C Assembly With Additional GD Coated Guide Supports (cont.)**

```
UNIT 6
COM=" 17OFA FUEL ROD (NO GUIDE PLATE) - BOTTOM HALF "
ZHEMICYL-Y  1  1    0.392176                                  6.35    0.0
ZHEMICYL-Y  0  1    0.40005                                   6.35    0.0
ZHEMICYL-Y  2  1    0.45720                                   6.35    0.0
CUBOID      3  1    0.55209  -0.55209   0.00000  -0.63750     6.35    0.0

UNIT 7
COM=" 17OFA FUEL ROD (NO GUIDE PLATE) - TOP HALF "
ZHEMICYL+Y  1  1    0.392176                                  6.35    0.0
ZHEMICYL+Y  0  1    0.40005                                   6.35    0.0
ZHEMICYL+Y  2  1    0.45720                                   6.35    0.0
CUBOID      3  1    0.55209  -0.55209   0.63750   0.00000     6.35    0.0

UNIT 8
COM=" VVER 1000 MODIFIED GT/IT - BOTTOM HALF "
ZHEMICYL-Y  3  1    0.4710                                    6.35    0.0
ZHEMICYL-Y  2  1    0.5400                                    6.35    0.0
CUBOID      3  1    0.55209  -0.55209   0.00000  -0.63750     6.35    0.0

UNIT 9
COM=" VVER 1000 MODIFIED GT/IT - TOP HALF "
ZHEMICYL+Y  3  1    0.4710                                    6.35    0.0
ZHEMICYL+Y  2  1    0.5400                                    6.35    0.0
CUBOID      3  1    0.55209  -0.55209   0.63750   0.00000     6.35    0.0

UNIT 10
COM=" EMPTY WATER CELL - TOP OR BOTTOM HALF "
CUBOID      3  1    0.55209  -0.55209   0.63750   0.00000     6.35    0.0

UNIT 11
COM=" LEFT GAD PLATE - LEFT SIDE"
CUBOID      5  1   1.10418  0.40229   0.01016   0.0       19.05 0.0
CUBOID      6  1   1.10418  0.40229   0.16891   0.0       19.05 0.0
CUBOID      3  1   1.10418  0.0       0.48641  -0.15109   19.05 0.0

UNIT 12
COM=" LEFT GAD PLATE - RIGHT SIDE"
CUBOID      5  1   0.78668  0.0       0.01016   0.0       19.05 0.0
CUBOID      6  1   0.78668  0.0       0.16891   0.0       19.05 0.0
CUBOID      3  1   1.10418  0.0       0.48641  -0.15109   19.05 0.0

UNIT 13
COM=" RIGHT GAD PLATE - LEFT SIDE"
CUBOID      5  1   1.10418  0.78668   0.01016   0.0       19.05 0.0
CUBOID      6  1   1.10418  0.78668   0.16891   0.0       19.05 0.0
CUBOID      3  1   1.10418  0.0       0.48641  -0.15109   19.05 0.0

UNIT 14
COM=" RIGHT GAD PLATE - RIGHT SIDE"
CUBOID      5  1   0.70189  0.0       0.01016   0.0       19.05 0.0
CUBOID      6  1   0.70189  0.0       0.16891   0.0       19.05 0.0
CUBOID      3  1   1.10418  0.0       0.48641  -0.15109   19.05 0.0

UNIT 15
COM=" BOTTOM GAD PLATE - FULL CELL"
CUBOID      5  1   1.10418  0.0       0.01016   0.0       19.05 0.0
```

**Table 6-3-13 Listing of KENO Input for Type C Assembly With Additional GD Coated Guide Supports (cont.)**

```
CUBOID      6  1   1.10418  0.0       0.16891   0.0       19.05 0.0
CUBOID      3  1   1.10418  0.0       0.48641  -0.15109   19.05 0.0

UNIT 16
COM=" BOTTOM EDGE OF CS STRONGBACK "
CUBOID      4  1   24.95550   0.0       0.0      -0.45720   25.4  0.0

UNIT 17
COM=" VERTICAL EDGE OF CS STRONGBACK "
CUBOID      4  1    0.0      -0.45720  25.4000  -0.45720   25.4  0.0

UNIT 18
COM=" VERTICAL GADOLINIA ABSORBER PANEL "
CUBOID      6  1    0.04445  -0.04445  18.41500   0.0       25.4  0.0
CUBOID      5  1    0.05461  -0.05461  18.41500   0.0       25.4  0.0

GLOBAL

UNIT 25
COM=" VVER 1000 ASSEMBLY IN CASK "
ARRAY 1             0.0                 0.73410              0.0
CUBOID      3  1   41.73728  -2.99720  38.30660 -38.10000   25.4 0.0

HOLE 16   0.0        0.0        0.0
HOLE 17   0.0        0.0        0.0
HOLE 18  -0.85344    0.81280    0.0

REPLICATE   4  1  0.22606 0.0  0.22606 0.22606 0.22606 0.0 1
END GEOM

READ ARRAY
ARA=1 NUX=21 NUY=43 NUZ=2 COM=" VVER-1000 ASSEMBLY IN H2O"
LOOP
 1   1  21   1     2  43   1     1   1   1
 2   2  20   2     2  42   2     1   1   1
 2   1  21   2     3  43   2     1   1   1
 3   5   5   1    22  22   1     1   1   1
 4   5   5   1    23  23   1     1   1   1
 3   6   6   1    17  27  10     1   1   1
 4   6   6   1    18  28  10     1   1   1
 3   8   8   1    13  21   8     1   1   1
 4   8   8   1    14  22   8     1   1   1
 3   8   8   1    31  31   1     1   1   1
 4   8   8   1    32  32   1     1   1   1
 3   9   9   1    26  26   1     1   1   1
 4   9   9   1    27  27   1     1   1   1
 3  10  10   1    17  17   1     1   1   1
 4  10  10   1    18  18   1     1   1   1
 3  11  11   1    12  32  10     1   1   1
 4  11  11   1    13  33  10     1   1   1
 3  12  12   1    27  27   1     1   1   1
 4  12  12   1    28  28   1     1   1   1
 3  13  13   1    18  18   1     1   1   1
 4  13  13   1    19  19   1     1   1   1
 3  14  14   1    13  23  10     1   1   1
 4  14  14   1    14  24  10     1   1   1
 3  14  14   1    31  31   1     1   1   1
```

**Table 6-3-13 (cont.) Listing of KENO Input for Type C Assembly With Additional GD Coated Guide Supports**

| | | | | | | | | | |
|---|---|---|---|---|---|---|---|---|---|
| 4 | 14 | 14 | 1 | 32 | 32 | 1 | 1 | 1 | 1 |
| 3 | 16 | 16 | 1 | 17 | 27 | 10 | 1 | 1 | 1 |
| 4 | 16 | 16 | 1 | 18 | 28 | 10 | 1 | 1 | 1 |
| 3 | 17 | 17 | 1 | 22 | 22 | 10 | 1 | 1 | 1 |
| 4 | 17 | 17 | 1 | 23 | 23 | 10 | 1 | 1 | 1 |
| 5 | 1 | 21 | 1 | 1 | 1 | 1 | 1 | 1 | 1 |
| 5 | 1 | 10 | 1 | 2 | 43 | 41 | 1 | 1 | 1 |
| 5 | 1 | 9 | 1 | 3 | 42 | 39 | 1 | 1 | 1 |
| 5 | 1 | 8 | 1 | 4 | 41 | 37 | 1 | 1 | 1 |
| 5 | 1 | 7 | 1 | 5 | 40 | 35 | 1 | 1 | 1 |
| 5 | 1 | 6 | 1 | 6 | 39 | 33 | 1 | 1 | 1 |
| 5 | 1 | 5 | 1 | 7 | 38 | 31 | 1 | 1 | 1 |
| 5 | 1 | 4 | 1 | 8 | 37 | 29 | 1 | 1 | 1 |
| 5 | 1 | 3 | 1 | 9 | 36 | 27 | 1 | 1 | 1 |
| 5 | 1 | 2 | 1 | 10 | 35 | 25 | 1 | 1 | 1 |
| 5 | 1 | 1 | 1 | 11 | 34 | 23 | 1 | 1 | 1 |
| 5 | 12 | 21 | 1 | 2 | 43 | 41 | 1 | 1 | 1 |
| 5 | 13 | 21 | 1 | 3 | 42 | 39 | 1 | 1 | 1 |
| 5 | 14 | 21 | 1 | 4 | 41 | 37 | 1 | 1 | 1 |
| 5 | 15 | 21 | 1 | 5 | 40 | 35 | 1 | 1 | 1 |
| 5 | 16 | 21 | 1 | 6 | 39 | 33 | 1 | 1 | 1 |
| 5 | 17 | 21 | 1 | 7 | 38 | 31 | 1 | 1 | 1 |
| 5 | 18 | 21 | 1 | 8 | 37 | 29 | 1 | 1 | 1 |
| 5 | 19 | 21 | 1 | 9 | 36 | 27 | 1 | 1 | 1 |
| 5 | 20 | 21 | 1 | 10 | 35 | 25 | 1 | 1 | 1 |
| 5 | 21 | 21 | 1 | 11 | 34 | 23 | 1 | 1 | 1 |
| 11 | 1 | 1 | 1 | 9 | 9 | 1 | 1 | 1 | 1 |
| 11 | 2 | 2 | 1 | 8 | 8 | 1 | 1 | 1 | 1 |
| 11 | 3 | 3 | 1 | 7 | 7 | 1 | 1 | 1 | 1 |
| 11 | 4 | 4 | 1 | 6 | 6 | 1 | 1 | 1 | 1 |
| 11 | 5 | 5 | 1 | 5 | 5 | 1 | 1 | 1 | 1 |
| 11 | 6 | 6 | 1 | 4 | 4 | 1 | 1 | 1 | 1 |
| 11 | 7 | 7 | 1 | 3 | 3 | 1 | 1 | 1 | 1 |
| 11 | 8 | 8 | 1 | 2 | 2 | 1 | 1 | 1 | 1 |
| 12 | 2 | 2 | 1 | 9 | 9 | 1 | 1 | 1 | 1 |
| 12 | 3 | 3 | 1 | 8 | 8 | 1 | 1 | 1 | 1 |
| 12 | 4 | 4 | 1 | 7 | 7 | 1 | 1 | 1 | 1 |
| 12 | 5 | 5 | 1 | 6 | 6 | 1 | 1 | 1 | 1 |
| 12 | 6 | 6 | 1 | 5 | 5 | 1 | 1 | 1 | 1 |
| 12 | 7 | 7 | 1 | 4 | 4 | 1 | 1 | 1 | 1 |
| 12 | 8 | 8 | 1 | 3 | 3 | 1 | 1 | 1 | 1 |
| 12 | 9 | 9 | 1 | 2 | 2 | 1 | 1 | 1 | 1 |
| 13 | 20 | 20 | 1 | 9 | 9 | 1 | 1 | 1 | 1 |
| 13 | 19 | 19 | 1 | 8 | 8 | 1 | 1 | 1 | 1 |
| 13 | 18 | 18 | 1 | 7 | 7 | 1 | 1 | 1 | 1 |
| 13 | 17 | 17 | 1 | 6 | 6 | 1 | 1 | 1 | 1 |
| 13 | 16 | 16 | 1 | 5 | 5 | 1 | 1 | 1 | 1 |
| 13 | 15 | 15 | 1 | 4 | 4 | 1 | 1 | 1 | 1 |
| 13 | 14 | 14 | 1 | 3 | 3 | 1 | 1 | 1 | 1 |
| 13 | 13 | 13 | 1 | 2 | 2 | 1 | 1 | 1 | 1 |
| 14 | 21 | 21 | 1 | 9 | 9 | 1 | 1 | 1 | 1 |
| 14 | 20 | 20 | 1 | 8 | 8 | 1 | 1 | 1 | 1 |
| 14 | 19 | 19 | 1 | 7 | 7 | 1 | 1 | 1 | 1 |
| 14 | 18 | 18 | 1 | 6 | 6 | 1 | 1 | 1 | 1 |
| 14 | 17 | 17 | 1 | 5 | 5 | 1 | 1 | 1 | 1 |
| 14 | 16 | 16 | 1 | 4 | 4 | 1 | 1 | 1 | 1 |
| 14 | 15 | 15 | 1 | 3 | 3 | 1 | 1 | 1 | 1 |

**Table 6-3-13 (cont.) Listing of KENO Input for Type C Assembly With Additional GD Coated Guide Supports**

```
14  14  14   1    2   2   1    1   1   1
15  10  12   1    1   1   1    1   1   1
 6   1  21   1    2  43   1    2   2   1
 7   2  20   2    2  42   2    2   2   1
 7   1  21   2    3  43   2    2   2   1
 8   5   5   1   22  22   1    2   2   1
 9   5   5   1   23  23   1    2   2   1
 8   6   6   1   17  27  10    2   2   1
 9   6   6   1   18  28  10    2   2   1
 8   8   8   1   13  21   8    2   2   1
 9   8   8   1   14  22   8    2   2   1
 8   8   8   1   31  31   1    2   2   1
 9   8   8   1   32  32   1    2   2   1
 8   9   9   1   26  26   1    2   2   1
 9   9   9   1   27  27   1    2   2   1
 8  10  10   1   17  17   1    2   2   1
 9  10  10   1   18  18   1    2   2   1
 8  11  11   1   12  32  10    2   2   1
 9  11  11   1   13  33  10    2   2   1
 8  12  12   1   27  27   1    2   2   1
 9  12  12   1   28  28   1    2   2   1
 8  13  13   1   18  18   1    2   2   1
 9  13  13   1   19  19   1    2   2   1
 8  14  14   1   13  23  10    2   2   1
 9  14  14   1   14  24  10    2   2   1
 8  14  14   1   31  31   1    2   2   1
 9  14  14   1   32  32   1    2   2   1
 8  16  16   1   17  27  10    2   2   1
 9  16  16   1   18  28  10    2   2   1
 8  17  17   1   22  22  10    2   2   1
 9  17  17   1   23  23  10    2   2   1
10   1  21   1    1   1   1    2   2   1
10   1  10   1    2  43  41    2   2   1
10   1   9   1    3  42  39    2   2   1
10   1   8   1    4  41  37    2   2   1
10   1   7   1    5  40  35    2   2   1
10   1   6   1    6  39  33    2   2   1
10   1   5   1    7  38  31    2   2   1
10   1   4   1    8  37  29    2   2   1
10   1   3   1    9  36  27    2   2   1
10   1   2   1   10  35  25    2   2   1
10   1   1   1   11  34  23    2   2   1
10  12  21   1    2  43  41    2   2   1
10  13  21   1    3  42  39    2   2   1
10  14  21   1    4  41  37    2   2   1
10  15  21   1    5  40  35    2   2   1
10  16  21   1    6  39  33    2   2   1
10  17  21   1    7  38  31    2   2   1
10  18  21   1    8  37  29    2   2   1
10  19  21   1    9  36  27    2   2   1
10  20  21   1   10  35  25    2   2   1
10  21  21   1   11  34  23    2   2   1
END LOOP

END ARRAY
```

**Table 6-3-13 Listing of KENO Input for Type C Assembly With Additional GD Coated Guide Supports (cont.)**

```
READ BOUNDS
ALL=SPECULAR
END BOUNDS

READ PLOT
  TTL='MAT SLICE THROUGH ASSEMBLY CENTER '
  PIC=MAT
  NCH='0.ZWSGS'
  XUL= 10.75915 YUL= 18.75915 ZUL= 15.0
  XLR= 18.75915 YLR= 10.75915 ZLR= 15.0
  UAX=1.0    VDN=-1.0   NAX=130
END
  TTL='MAT SLICE THROUGH ASSEMBLY ARRAY '
  PIC=MAT
  NCH='0.ZWSGS'
  XUL= -2.99720 YUL= 28.14660 ZUL= 15.0
  XLR= 28.14660 YLR= -2.99720 ZLR= 15.0
  UAX=1.0    VDN=-1.0   NAX=130
END
  TTL='MAT SLICE THROUGH CASK MODEL '
  PIC=MAT
  NCH='0.ZWSGS'
  XUL= -2.99720 YUL= 31.80334 ZUL= 15.0
  XLR= 41.96334 YLR=-38.32606 ZLR= 15.0
  UAX=1.0    VDN=-1.0   NAX=130
END PLOT

END DATA
```

**Table 6-3-25 (cont.) KENO Input Deck for 17STD XL – 4.65 WT% Enrichment – 10.75-Inch Annular Pellet Zone – MCC Container with No Horizontal Gadolinia Plates**

```
mix= 9
'  carbon steel for strongback & shell
           36012      4.728898e-4
          315031      5.807008e-5
          316032      6.642906e-5
          325055      3.877064e-4
          326000      8.420119e-2
mix= 10
'  gadolinia oxide absorber (0.02 gm gd2o3/cm2 @ 0.01016 cm thickness)
           48016      9.810529e-3
          464152      1.308071e-5
          464154      1.373474e-4
          464155      9.679722e-4
          464156      1.347313e-3
          464157      1.026835e-3
          464158      1.622008e-3
          464160      1.425792e-3
mix= 11
'  carbon steel sheet for gd absorber
           56012      4.728898e-4
          515031      5.807008e-5
          516032      6.642906e-5
          525055      3.877064e-4
          526000      8.420119e-2
end mixt

read geometry
unit 1
com=" 17std fuel rod - enriched region"
cylinder    1  1    0.40960   186.055  0.0
cylinder    2  1    0.41780   186.055  0.0
cylinder    3  1    0.47500   186.055  0.0
cuboid      8  1  4p0.62992   186.055  0.0
unit 2
com=" 17std guide and instrument tube - enriched region"
cylinder    8  1    0.57150   186.055  0.0
cylinder    3  1    0.61214   186.055  0.0
cuboid      8  1  4p0.62992   186.055  0.0
unit 3
com=" 17std fuel rod - blanket region"
cylinder    4  1    0.19685    27.305  0.0
cylinder    5  1    0.40960    27.305  0.0
cylinder    6  1    0.41780    27.305  0.0
cylinder    7  1    0.47500    27.305  0.0
cuboid      8  1  4p0.62992    27.305  0.0
unit 4
com=" 17std guide and instrument tube - blanket region"
cylinder    8  1    0.57150    27.305  0.0
cylinder    3  1    0.61214    27.305  0.0
cuboid      8  1  4p0.62992    27.305  0.0
unit 7      com='strong back, horizontal'
  cuboid    9 1 25.413 0.0  0.4572  0.0  230.56  0.0
unit 8      com='strong back, vertical'
  cuboid    9 1 0.4572 0.0  24.14   0.0  230.56  0.0
unit 9      com='verticle gad poison plat between assembly'
  cuboid   11 1 0.0889 0.0  18.415  0.0   230.56  0.0
  cuboid   10 1 .09906 -.01016 18.415 0.0 230.56  0.0
```

**Table 6-3-25 (cont.)** **KENO Input Deck for 17STD XL – 4.65 WT% Enrichment – 10.75-Inch Annular Pellet Zone – MCC Container with No Horizontal Gadolinia Plates**

```
unit 10      com='rest of strongback and cradle'
  cuboid     8 1 7.1051 0.5149 12.1851 0.5149 230.56  0.0
  cuboid     9 1 7.62   0.0    12.70   0.0    230.56  0.0
unit 11      com='container flanges and bracket'
  cuboid     9 1 1.285  0.0    22.86   0.0    230.56  0.0
unit 12      com='skid angle'
  cuboid     8 1 7.62   0.9652 7.62    0.9652 230.56  0.0
  cuboid     9 1 7.62   0.0    7.62    0.0    230.56  0.0
unit 13      com='middle top clamping assembly'
  cuboid     9 1 33.02  0.0    5.08     0.0   2.5908  0.0
unit 14      com='middle side clamping assembly'
  cuboid     9 1  5.08  0.0    24.120    0.0   2.5908  0.0
unit 15      com='unistrut channel assembly'
  cuboid     8 1 1.799  0.0    3.556   0.7399 230.56  0.0
  cuboid     9 1 2.538  0.0    3.556   0.0    230.56  0.0
unit 16      com='top clamping assembly'
  cuboid     9 1 33.02  0.0    5.08     0.0   5.1816  0.0
unit 17      com='side clamping assembly'
  cuboid     9 1  5.08  0.0    24.120    0.0   5.1816  0.0
unit 18      com='horizontal gad poison plate below assembly, space 3,4,5,6'
  cuboid    11 1 22.225 0.0  0.0889   0.0   21.59  0.0
  cuboid    10 1 22.225 0.0  .09906 -.01016 21.59  0.0
unit 19      com='horizontal gad poison plate below assembly, space 2 and 7'
  cuboid    11 1 22.225 0.0  0.0889   0.0   53.34  0.0
  cuboid    10 1 22.225 0.0  .09906 -.01016 53.34  0.0
unit 20      com='horizontal gad poison plate below assembly, space 1 and 8'
  cuboid    11 1 22.225 0.0  0.0889   0.0   57.33  0.0
  cuboid    10 1 22.225 0.0  .09906 -.01016 57.33  0.0
global
unit 21
com=" 17std assembly in cask "
array 1   0.0       0.0       0.0
cuboid      8  1    43.026   -3.1    31.586    -38.56    232.29   0.0

hole        7  -0.4572  -0.4572   0.0
hole        8  -0.4572   0        0.0
hole        9  -0.8979   0.8128   0.0
hole       10  24.958   -18.237   0.0
hole       11  41.74    -12.7     0.0
hole       12  30.48    -38.55    0.0
hole       13  -1.443    26.50    0.0
hole       14  26.50     2.367    0.0
hole       16  -1.443    26.50    63.93
hole       17  26.50     2.367    63.93
hole       16  -1.443    26.50    130.5
hole       17  26.50     2.367    130.5
hole       16  -1.443    26.50    177.7
hole       17  26.50     2.367    177.7
hole       16  -1.443    26.50    224.9
hole       17  26.50     2.367    224.9
hole       15  -2.997    20.87    0.0
cuboid      9  1    43.25    -3.1    31.81    -38.78    232.51   0.0
end geom
```

**Table 6-3-25 (cont.)** **KENO Input Deck for 17STD XL – 4.65 WT% Enrichment – 10.75-Inch Annular Pellet Zone – MCC Container with No Horizontal Gadolinia Plates**

```
read array
ara=1 nux=17 nuy=17 nuz=2 com=" 17std assembly "
loop
 1   1  17   1      1  17   1      1   1   1
 2   3  15   3      6  12   3      1   1   1
 2   4  14  10      4  14  10      1   1   1
 2   6  12   3      3  15  12      1   1   1
 3   1  17   1      1  17   1      2   2   1
 4   3  15   3      6  12   3      2   2   1
 4   4  14  10      4  14  10      2   2   1
 4   6  12   3      3  15  12      2   2   1
end loop
end array

read bounds
all=specular
end bounds

read plot
  ttl='box slice through cask'
  pic=box
  nch='0ugiugiabcdefhjklmnop.'
  xul= -4.0      yul= 30.1      zul= 66.52
  xlr= 45.0      ylr= -40.0     zlr= 66.52
  uax=1.0    vdn=-1.0   nax=130 end
  ttl='box slice through cask'
  pic=mat
  nch='0u.z.u.z.sgs'
  xul= -4.0      yul= 30.1      zul= 66.52
  xlr= 45.0      ylr= -40.0     zlr= 66.52
  uax=1.0    vdn=-1.0   nax=130 end
  ttl='box slice through assembly'
  pic=box
  nch='0ugiugiabcdefhjklmnop.'
  xul= 0.0       yul= 20.0      zul= 66.52
  xlr= 20.0      ylr= 0.0     zlr= 66.52
  uax=1.0    vdn=-1.0   nax=130 end
  ttl='mat slice through annular pellet'
  pic=mat
  nch='0u.z.u.z.sgs'
  xul= 1.41      yul= 4.24    zul= 180.0
  xlr= 4.24      ylr= 1.41    zlr= 180.0
  uax=1.0    vdn=-1.0   nax=130 end
  ttl='mat slice through annular pellet'
  pic=mat
  nch='0u.z.u.z.sgs'
  xul= -1.0      yul= 18.0    zul= 180.0
  xlr= -0.5      ylr= 0.0     zlr= 180.0
  uax=1.0    vdn=-1.0   nax=130  ndn=100  end
end plot
end data
end
```

**Table 6-3-26 KENO Input Deck for 17STD XL – 5.00 WT% Enrichment – 10.75-Inch Annular Pellet Zone – MCC Container with Horizontal Gadolinia Plates**

```
#job -jn mcc17xl5.0_10.75inann
#
# mcc 17std xl with 10.75-in annular with horizontal gad plates 5.0wt%
#
#
#
ln -s /opt/wec/etc/227binlib  ftn51
ln -s /opt/wec/etc/albedos  ftn79
ln -s /opt/wec/etc/weights  ftn80
#
/EOF
title-cask with 17std 5.00 w/o assembly

read parameters
  tme=180   run=yes   plt=no
  gen=400   npg=1500  nsk=050   lib=29
  xsl=yes   nub=yes
end parameters

read start
  NST=1 XSM=0.00 XSP=21.4173
  YSM=0.00 YSP=21.4173 ZSM=0.00 ZSP=182.88
end start

read mixt  sct=2
mix= 1
' solid uo2 pellet 5.00 w/o (96.5% td, 0% dish)
          1192235     0.0011942
          1192238     0.022404
           118016     0.047196
mix= 2
' h2o at 1.00 g/cc in solid pellet gap
           231001     0.066854
           238016     0.033427
mix= 3
' solid zirc fuel rod cladding
         2140302     0.043326
mix= 4
' h2o at 1.00 g/cc in blanket fuel annulus
           151001     0.066854
           158016     0.033427
mix= 5
' annular uo2 pellet 5.00 w/o (96.5% td)
          2292235     0.0011942
          2292238     0.022404
           228016     0.047196
mix= 6
' h2o at 1.00 g/cc in annular pellet gap
           341001     0.066854
           348016     0.033427
mix= 7
' annular zirc fuel rod cladding
          3240302     0.043326
mix= 8
' h2o at 1.00 g/cc
            31001     0.066854
            38016     0.033427
```

**Table 6-3-26 (cont.) KENO Input Deck for 17STD XL – 5.00 WT% Enrichment – 10.75-Inch Annular Pellet Zone – MCC Container with Horizontal Gadolinia Plates**

```
mix= 9
'  carbon steel for strongback & shell
            36012      4.728898e-4
           315031      5.807008e-5
           316032      6.642906e-5
           325055      3.877064e-4
           326000      8.420119e-2
mix= 10
'  gadolinia oxide absorber (0.02 gm gd2o3/cm2 @ 0.01016 cm thickness)
            48016      9.810529e-3
           464152      1.308071e-5
           464154      1.373474e-4
           464155      9.679722e-4
           464156      1.347313e-3
           464157      1.026835e-3
           464158      1.622008e-3
           464160      1.425792e-3
mix= 11
'  carbon steel sheet for gd absorber
            56012      4.728898e-4
           515031      5.807008e-5
           516032      6.642906e-5
           525055      3.877064e-4
           526000      8.420119e-2
end mixt

read geometry
unit 1
com=" 17std fuel rod - enriched region"
cylinder    1  1     0.40960   186.055  0.0
cylinder    2  1     0.41780   186.055  0.0
cylinder    3  1     0.47500   186.055  0.0
cuboid      8  1  4p0.62992   186.055  0.0
unit 2
com=" 17std guide and instrument tube - enriched region"
cylinder    8  1     0.57150   186.055  0.0
cylinder    3  1     0.61214   186.055  0.0
cuboid      8  1  4p0.62992   186.055  0.0
unit 3
com=" 17std fuel rod - blanket region"
cylinder    4  1     0.19685    27.305  0.0
cylinder    5  1     0.40960    27.305  0.0
cylinder    6  1     0.41780    27.305  0.0
cylinder    7  1     0.47500    27.305  0.0
cuboid      8  1  4p0.62992    27.305  0.0
unit 4
com=" 17std guide and instrument tube - blanket region"
cylinder    8  1     0.57150    27.305  0.0
cylinder    3  1     0.61214    27.305  0.0
cuboid      8  1  4p0.62992    27.305  0.0
unit 7      com='strong back, horizontal'
  cuboid    9 1 25.413 0.0  0.4572  0.0  230.56  0.0
unit 8      com='strong back, vertical'
  cuboid    9 1 0.4572 0.0  24.14   0.0  230.56  0.0
unit 9      com='verticle gad poison plat between assembly'
  cuboid   11 1 0.0889 0.0  18.415  0.0   230.56  0.0
  cuboid   10 1 .09906 -.01016 18.415 0.0 230.56  0.0
```

**Table 6-3-26 (cont.) KENO Input Deck for 17STD XL – 5.00 WT% Enrichment – 10.75-Inch Annular Pellet Zone – MCC Container with Horizontal Gadolinia Plates**

```
unit 10      com='rest of strongback and cradle'
  cuboid     8 1 7.1051 0.5149 12.1851 0.5149 230.56  0.0
  cuboid     9 1 7.62   0.0    12.70   0.0    230.56  0.0
unit 11      com='container flanges and bracket'
  cuboid     9 1 1.285  0.0    22.86   0.0    230.56  0.0
unit 12      com='skid angle'
  cuboid     8 1 7.62   0.9652 7.62    0.9652 230.56  0.0
  cuboid     9 1 7.62   0.0    7.62    0.0    230.56  0.0
unit 13      com='middle top clamping assembly'
  cuboid     9 1 33.02  0.0    5.08     0.0   2.5908  0.0
unit 14      com='middle side clamping assembly'
  cuboid     9 1  5.08  0.0    24.120    0.0   2.5908  0.0
unit 15      com='unistrut channel assembly'
  cuboid     8 1 1.799  0.0    3.556   0.7399 230.56  0.0
  cuboid     9 1 2.538  0.0    3.556   0.0    230.56  0.0
unit 16      com='top clamping assembly'
  cuboid     9 1 33.02  0.0    5.08     0.0   5.1816  0.0
unit 17      com='side clamping assembly'
  cuboid     9 1  5.08  0.0    24.120    0.0   5.1816  0.0
unit 18      com='horizontal gad poison plate below assembly, space 3,4,5,6'
  cuboid    11 1 22.225 0.0  0.0889   0.0   21.59  0.0
  cuboid    10 1 22.225 0.0  .09906 -.01016 21.59  0.0
unit 19      com='horizontal gad poison plate below assembly, space 2 and 7'
  cuboid    11 1 22.225 0.0  0.0889   0.0   53.34  0.0
  cuboid    10 1 22.225 0.0  .09906 -.01016 53.34  0.0
unit 20      com='horizontal gad poison plate below assembly, space 1 and 8'
  cuboid    11 1 22.225 0.0  0.0889   0.0   57.33  0.0
  cuboid    10 1 22.225 0.0  .09906 -.01016 57.33  0.0
global
unit 21
com=" 17std assembly in cask "
array 1   0.0       0.0       0.0
cuboid      8  1    43.026   -3.1    31.586    -38.56    232.29   0.0

hole        7  -0.4572  -0.4572   0.0
hole        8  -0.4572   0        0.0
hole        9  -0.8979   0.8128   0.0
hole       10  24.958   -18.237   0.0
hole       11  41.74    -12.7     0.0
hole       12  30.48    -38.55    0.0
hole       13  -1.443    26.50    0.0
hole       14  26.50     2.367    0.0
hole       16  -1.443    26.50    63.93
hole       17  26.50     2.367    63.93
hole       16  -1.443    26.50    130.5
hole       17  26.50     2.367    130.5
hole       16  -1.443    26.50    177.7
hole       17  26.50     2.367    177.7
hole       16  -1.443    26.50    224.9
hole       17  26.50     2.367    224.9
hole       15  -2.997    20.87    0.0
hole       18   0.0     -0.5563   4.7625
hole       18   0.0     -0.5563   26.3525
hole       18   0.0     -0.5563   57.4675
hole       18   0.0     -0.5563   79.0575
hole       19   0.0     -0.5563   110.1725
hole       20   0.0     -0.5563   173.2325
cuboid      9  1    43.25    -3.1    31.81    -38.78    232.51   0.0
end geom
```

| Table 6-3-26 (cont.) | KENO Input Deck for 17STD XL – 5.00 WT% Enrichment – 10.75-Inch Annular Pellet Zone – MCC Container with Horizontal Gadolinia Plates |
|---|---|

```
read array
ara=1 nux=17 nuy=17 nuz=2 com=" 17std assembly "
loop
 1   1  17   1      1  17   1      1   1   1
 2   3  15   3      6  12   3      1   1   1
 2   4  14  10      4  14  10      1   1   1
 2   6  12   3      3  15  12      1   1   1
 3   1  17   1      1  17   1      2   2   1
 4   3  15   3      6  12   3      2   2   1
 4   4  14  10      4  14  10      2   2   1
 4   6  12   3      3  15  12      2   2   1
end loop
end array

read bounds
all=specular
end bounds

end data
end
```

**Table 6-3-27 KENO Input Deck for 14 422 V+ Fuel Assembly – 5.00 WT% Enrichment**

```
ln -s /opt/wec/etc/227binlib ftn51
ln -s /opt/wec/etc/albedos ftn79
ln -s /opt/wec/etc/weights ftn80
#
/EOF
KENO - 14X14 STD ASSEMBLY IN H2O

READ PARAMETERS
  TME=180   RUN=YES   PLT=NO
  GEN=400   NPG=1500  NSK=050   LIB=3
  XS1=YES   NUB=YES
END PARAMETERS

read start
nst=0 xsm=-10. xsp=10 ysm=-10 ysp=10 zsm=0 zsp=30
end start

READ MIXT  SCT=2
MIX= 1
' UO2 PELLET 5.00 W/O (96.5% TD, 0% DISH)
          1192235     0.0011942
          1192238     0.022404
            18016     0.047196
MIX= 2
' ZIRC FUEL ROD CLADDING
           240302     0.043326
MIX= 3
' H2O AT 1.00 G/CC
            31001     0.066854
            38016     0.033427
END MIXT

READ GEOMETRY
UNIT 1
COM=" 14X14 STD FUEL ROD "
CYLINDER    1  1    0.464693  30.0  0.0
CYLINDER    0  1    0.47498   30.0  0.0
CYLINDER    2  1    0.53594   30.0  0.0
CUBOID      3  1  4P0.70612   30.0  0.0
UNIT 2
COM=" 14X14 STD GUIDE TUBE "
CYLINDER    3  1    0.62484   30.0  0.0
CYLINDER    2  1    0.66802   30.0  0.0
CUBOID      3  1  4P0.70612   30.0  0.0
UNIT 3
COM=" 14X14 STD INSTRUMENT TUBE "
CYLINDER    3  1    0.47498   30.0  0.0
CYLINDER    2  1    0.53594   30.0  0.0
CUBOID      3  1  4P0.70612   30.0  0.0
GLOBAL
UNIT 4
COM=" 14X14 STD ASSEMBLY IN H2O "
ARRAY 1  2R-9.88568  0.0
REPLICATE   3  1  4R15.2400    0.0  0.0  1
END GEOM
```

**Table 6-3-27 KENO Input Deck for 14 422 V+ Fuel Assembly – 5.00 WT% Enrichment (cont.)**

```
READ ARRAY
ARA=1 NUX=14 NUY=14 NUZ=1 COM=" 14X14 STD ASSEMBLY "
LOOP
 1   1  14   1     1  14   1     1   1   1
 2   3  12   3     3  12   9     1   1   1
 2   3  12   9     6   9   3     1   1   1
 2   5  10   5     5  10   5     1   1   1
 3   7   7   1     8   8   1     1   1   1
END LOOP
END ARRAY

READ BOUNDS
ALL=SPECULAR
END BOUNDS

READ PLOT
  TTL='BOX SLICE THROUGH ASSEMBLY & H2O '
  PIC=BOX
  NCH='0FGIW'
  XUL=-25.12568 YUL= 25.12568 ZUL= 15.0
  XLR= 25.12568 YLR=-25.12568 ZLR= 15.0
  UAX=1.0    VDN=-1.0   NAX=130
END PLOT

END DATA
```

**Table 6-3-28 Input Deck for Table 17 Model with Flooded Pin Gap – Annular Pellet**

```
TITLE-MC4 4.8 W/O SU-3 LTA CASK IN 3D
238GROUPNDF5                LATTICECELL
UO2          1  DEN=10.58  1.0  293  92235  4.8  92238  95.2     END
ZR           2             1.0  293                              END
H2O          3             1.0  293                              END
CARBONSTEEL  4             1.0  293                              END
ARBMGD2O3    1.9685 2 0 1 1 64000 2
                              8016 3 5 1.0 293                   END
CARBONSTEEL  6             1.0  293                              END
UO2          7  DEN=10.58  1.0  293  92235  4.8  92238  95.2     END
ZIRC4        8             1.0  293                              END
END COMP
TRIANGPITCH 1.27500  0.7844  1 3 0.9144 2 0.8001  3              END
MORE DATA  RES=7 CYLINDER 0.39218 0.19685
DAN(7)=0.37801673
RES=8 CYLINDER 0.4572 0.40005
DAN(8)=0.43692386 END MORE
MCC-5 PACKAGE,SU NPP-3 CONTENTS AT 4.0 W/O
READ PARAMETERS
  TME=400   RUN=YES  GEN=450   NPG=2000    NSK=50   NUB=YES
END PARAMETERS

READ GEOMETRY

UNIT 1
COM=" SU-3 LTA FUEL ROD (NOBA) - BOTTOM HALF "
ZHEMICYL-Y  1  1    0.392176                                156.1 0.0
ZHEMICYL-Y  3  1    0.40005                                 156.1 0.0
ZHEMICYL-Y  2  1    0.45720                                 156.1 0.0
CUBOID      3  1    0.55240  -0.55240   0.00000  -0.63750   156.1 0.0

UNIT 2
COM=" SU-3 LTA ROD (NOBA) - TOP HALF "
ZHEMICYL+Y  1  1    0.392176                                156.1 0.0
ZHEMICYL+Y  3  1    0.40005                                 156.1 0.0
ZHEMICYL+Y  2  1    0.45720                                 156.1 0.0
CUBOID      3  1    0.55240  -0.55240   0.63750   0.00000   156.1 0.0

UNIT 3
COM=" SU-3 LTA MODIFIED GT/IT - BOTTOM HALF "
ZHEMICYL-Y  3  1    0.4710                                  156.1 0.0
ZHEMICYL-Y  2  1    0.5400                                  156.1 0.0
CUBOID      3  1    0.55240  -0.55240   0.00000  -0.63750   156.1 0.0

UNIT 4
COM=" SU-3 LTA MODIFIED GT/IT - TOP HALF "
ZHEMICYL+Y  3  1    0.4710                                  156.1 0.0
ZHEMICYL+Y  2  1    0.5400                                  156.1 0.0
CUBOID      3  1    0.55240  -0.55240   0.63750   0.00000   156.1 0.0

UNIT 5
COM=" EMPTY WATER CELL - TOP OR BOTTOM HALF "
CUBOID      3  1    0.55240  -0.55240   0.63750   0.00000   156.1 0.0

UNIT 6
COM=" UNISTRUT CHANNEL ASSEMBLY"
CUBOID      3  1    1.799  0.0     3.5     0.7398   181.5  0.0
CUBOID      4  1    2.539  0.0     3.5     0.0      181.5  0.0
```

**Table 6-3-28 Input Deck for Table 17 Model with Flooded Pin Gap – Annular Pellet (cont.)**

```
UNIT 7
COM=" REST OF STRONGBACK AND CRADLE"
CUBOID      3  1    7.1051  0.5149  12.1851 0.5149  181.5  0.0
CUBOID      4  1    7.62    0.0     12.70   0.0     181.5  0.0

UNIT 8
COM=" CONTAINER FLANGES AND BRACKET"
CUBOID      4  1    1.285   0.0     22.86   0.0     181.5  0.0

UNIT 9
COM=" SKID ANGLE"
CUBOID      3  1    7.62    0.9652  7.62    0.9652  181.5  0.0
CUBOID      4  1    7.62    0.0     7.62    0.0     181.5  0.0


UNIT 13
COM=" BOTTOM EDGE OF CS STRONGBACK "
CUBOID      4  1   24.95550   0.0       0.0       -0.45720   196.74 0.0

UNIT 14
COM=" VERTICAL EDGE OF CS STRONGBACK "
CUBOID      4  1    0.0      -0.45720  24.13000  -0.45720   196.74 0.0

UNIT 15
COM=" VERTICAL GADOLINIA ABSORBER PANEL "
CUBOID      6  1    0.04445  -0.04445  18.41500   0.0       196.74 0.0
CUBOID      5  1    0.05461  -0.05461  18.41500   0.0       196.74 0.0

UNIT 16
COM=" ONE-SIDED PART-LENGTH GD PANEL UNDER STRONGBACK "
CUBOID      6  1   23.49500   0.0       0.0       -0.08890   33.02 0.0
CUBOID      5  1   23.49500   0.0       0.0       -0.09906   33.02 0.0

UNIT 17
COM=" GAP IN PART-LENGTH GD PANEL UNDER STRONGBACK "
CUBOID      3  1   23.49500   0.0       0.0       -0.09906    5.08 0.0

UNIT 18
COM=" HORIZONTAL GAD ABSORBER PLATE"
ARRAY 2              0.0                -0.09906              0.0
CUBOID      3  1   23.49500   0.0       0.0       -0.09906    196.74 0.0

UNIT 19
COM=" SU-3 LTA FUEL ROD (NOBA) - BOTTOM HALF "
ZHEMICYL-Y  3  1    0.19685                                   25.4 0.0
ZHEMICYL-Y  7  1    0.392176                                  25.4 0.0
ZHEMICYL-Y  3  1    0.40005                                   25.4 0.0
ZHEMICYL-Y  8  1    0.45720                                   25.4 0.0
CUBOID      3  1    0.55240  -0.55240   0.00000  -0.63750     25.4 0.0

UNIT 20
COM=" SU-3 LTA FUEL ROD (NOBA) - TOP HALF "
ZHEMICYL+Y  3  1    0.19685                                   25.4 0.0
ZHEMICYL+Y  7  1    0.392176                                  25.4 0.0
ZHEMICYL+Y  3  1    0.40005                                   25.4 0.0
ZHEMICYL+Y  8  1    0.45720                                   25.4 0.0
CUBOID      3  1    0.55240  -0.55240   0.63750   0.00000     25.4 0.0
```

**Table 6-3-28 Input Deck for Table 17 Model with Flooded Pin Gap – Annular Pellet (cont.)**

```
UNIT 21
COM=" SU-3 LTA MODIFIED GT/IT - BOTTOM HALF "
ZHEMICYL-Y  3  1    0.4710                                  25.4 0.0
ZHEMICYL-Y  2  1    0.5400                                  25.4 0.0
CUBOID      3  1    0.55240  -0.55240   0.00000  -0.63750   25.4 0.0

UNIT 22
COM=" SU-3 LTA MODIFIED GT/IT - TOP HALF "
ZHEMICYL+Y  3  1    0.4710                                  25.4 0.0
ZHEMICYL+Y  2  1    0.5400                                  25.4 0.0
CUBOID      3  1    0.55240  -0.55240   0.63750   0.00000   25.4 0.0

UNIT 23
COM=" EMPTY WATER CELL - TOP OR BOTTOM HALF "
CUBOID      3  1    0.55240  -0.55240   0.63750   0.00000   25.4 0.0

UNIT 24
COM=!SU-3 ASSEMBLY SECTION IN CASK - SOLID FUEL!
ARRAY 1             0.0                 0.73410              0.0

UNIT 25
COM=!SU-3 ASSEMBLY SECTION IN CASK - ANNULAR FUEL!
ARRAY 3             0.0                 0.73410              0.0

GLOBAL
UNIT 26
COM=" VVER 1000 ASSEMBLY IN CASK "
ARRAY 4             0.0                 1.37160              0.0
CUBOID      3  1   41.73728  -2.99720  38.30660 -38.10000  196.74 0.0
HOLE  6   -2.99715 20.61280   0.0
HOLE  7   28.0    -11.6284    0.0
HOLE  8   40.0    -13.6284    0.0
HOLE  9   32.0    -35.6284    0.0
HOLE 13   0.0       0.0       0.0
HOLE 14   0.0       0.0       0.0
HOLE 15  -0.85344   0.81280   0.0
HOLE 18   0.0      -0.457205  0.0
REPLICATE   4  1  0.22606 0.0  0.22606 0.22606 0.22606 0.0 1 END GEOM


READ ARRAY
ARA=1 NUX=21 NUY=42 NUZ=1 COM=" SU-3 LTA ASSEMBLY IN H2O-SOLID"
LOOP
  1   1  21   1     1  42   1     1   1   1
 2   2  20   2     1  41   2     1   1   1
 2   1  21   2     2  42   2     1   1   1
 3   5   5   1    21  21   1     1   1   1
 4   5   5   1    22  22   1     1   1   1
 3   6   6   1    16  26  10    1   1   1
 4   6   6   1    17  27  10    1   1   1
 3   8   8   1    12  20   8     1   1   1
 4   8   8   1    13  21   8     1   1   1
 3   8   8   1    30  30   1     1   1   1
 4   8   8   1    31  31   1     1   1   1
 3   9   9   1    25  25   1     1   1   1
 4   9   9   1    26  26   1     1   1   1
 3  10  10   1    16  16  1     1   1   1
```

**Table 6-3-28 Input Deck for Table 17 Model with Flooded Pin Gap – Annular Pellet (cont.)**

```
 4  10  10   1    17  17   1     1   1   1
 3  11  11   1    11  31  10    1   1   1
 4  11  11   1    12  32  10    1   1   1
 3  12  12   1    26  26   1     1   1   1
 4  12  12   1    27  27   1     1   1   1
 3  13  13   1    17  17   1     1   1   1
 4  13  13   1    18  18   1     1   1   1
 3  14  14   1    12  22  10     1   1   1
 4  14  14   1    13  23  10     1   1   1
 3  14  14   1    30  30   1      1   1   1
 4  14  14   1    31  31   1     1   1   1
 3  16  16   1    16  26  10     1   1   1
 4  16  16   1    17  27  10     1   1   1
 3  17  17   1    21  21  10     1   1   1
 4  17  17   1    22  22  10     1   1   1
 5   1  10   1     1  42  41     1   1   1
 5   1   9   1     2  41  39     1   1   1
 5   1   8   1     3  40  37     1   1   1
 5   1   7   1     4  39  35     1   1   1
 5   1   6   1     5  38  33     1   1   1
 5   1   5   1     6  37  31     1   1   1
 5   1   4   1     7  36  29     1   1   1
 5   1   3   1     8  35  27     1   1   1
 5   1   2   1     9  34  25     1   1   1
 5   1   1   1    10  33  23     1   1   1
 5  12  21   1     1  42  41     1   1   1
 5  13  21   1     2  41  39     1   1   1
 5  14  21   1     3  40  37     1   1   1
 5  15  21   1     4  39  35     1   1   1
 5  16  21   1     5  38  33     1   1   1
 5  17  21   1     6  37  31     1   1   1
 5  18  21   1     7  36  29     1   1   1
 5  19  21   1     8  35  27     1   1   1
 5  20  21   1     9  34  25     1   1   1
 5  21  21   1    10  33  23     1   1   1
END LOOP
ARA=2 NUX=1  NUY=1  NUZ=11 COM=" HORIZONTAL GAD ABSORBER PLATE WITH GAPS"
FILL
 17 16 17 17 16 17 17 16 17 17 16
END FILL
ARA=3 NUX=21 NUY=42 NUZ=1 COM=" SU-3 LTA ASSEMBLY IN H2O-ANNULAR"
LOOP
19   1  21   1     1  42   1     1   1   1
20   2  20   2     1  41   2     1   1   1
20   1  21   2     2  42   2     1   1   1
21   5   5   1    21  21   1     1   1   1
22   5   5   1    22  22   1     1   1   1
21   6   6   1    16  26  10    1   1   1
22   6   6   1    17  27  10    1   1   1
21   8   8   1    12  20   8     1   1   1
22   8   8   1    13  21   8     1   1   1
21   8   8   1    30  30   1     1   1   1
22   8   8   1    31  31   1     1   1   1
21   9   9   1    25  25   1     1   1   1
22   9   9   1    26  26   1     1   1   1
21  10  10   1    16  16  1     1   1   1
22  10  10   1    17  17   1     1   1   1
```

**Table 6-3-28 Input Deck for Table 17 Model with Flooded Pin Gap – Annular Pellet (cont.)**

```
21  11  11   1    11  31  10    1   1   1
22  11  11   1    12  32  10    1   1   1
21  12  12   1    26  26   1     1   1   1
22  12  12   1    27  27   1     1   1   1
21  13  13   1    17  17   1     1   1   1
22  13  13   1    18  18   1     1   1   1
21  14  14   1    12  22  10     1   1   1
22  14  14   1    13  23  10     1   1   1
21  14  14   1    30  30   1      1   1   1
22  14  14   1    31  31   1     1   1   1
21  16  16   1    16  26  10     1   1   1
22  16  16   1    17  27  10     1   1   1
21  17  17   1    21  21  10     1   1   1
22  17  17   1    22  22  10     1   1   1
23   1  10   1     1  42  41     1   1   1
23   1   9   1     2  41  39     1   1   1
23   1   8   1     3  40  37     1   1   1
23   1   7   1     4  39  35     1   1   1
23   1   6   1     5  38  33     1   1   1
23   1   5   1     6  37  31     1   1   1
23   1   4   1     7  36  29     1   1   1
23   1   3   1     8  35  27     1   1   1
23   1   2   1     9  34  25     1   1   1
23   1   1   1    10  33  23     1   1   1
23  12  21   1     1  42  41     1   1   1
23  13  21   1     2  41  39     1   1   1
23  14  21   1     3  40  37     1   1   1
23  15  21   1     4  39  35     1   1   1
23  16  21   1     5  38  33     1   1   1
23  17  21   1     6  37  31     1   1   1
23  18  21   1     7  36  29     1   1   1
23  19  21   1     8  35  27     1   1   1
23  20  21   1     9  34  25     1   1   1
23  21  21   1    10  33  23     1   1   1
END LOOP
ARA=4 NUX=1  NUY=1  NUZ=2
FILL 24 25
END FILL

END ARRAY

READ BOUNDS
ALL=SPECULAR
END BOUNDS

READ PLOT
  TTL='MAT SLICE THROUGH ASSEMBLY CENTER '
  PIC=MAT
  NCH='0.ZWSGS'
  XUL= 10.75915 YUL= 18.75915 ZUL= 15.0
  XLR= 18.75915 YLR= 10.75915 ZLR= 15.0
  UAX=1.0    VDN=-1.0   NAX=130

  TTL='MAT SLICE THROUGH ASSEMBLY ARRAY '
  PIC=MAT
  NCH='0.ZWSGS'
  XUL= -2.99720 YUL= 28.14660 ZUL= 15.0
```

**Table 6-3-28 Input Deck for Table 17 Model with Flooded Pin Gap – Annular Pellet (cont.)**

```
    XLR= 28.14660 YLR= -2.99720 ZLR= 15.0
    UAX=1.0     VDN=-1.0    NAX=130

    TTL='MAT SLICE THROUGH CASK MODEL '
    PIC=MAT
    NCH='0.ZWSGS'
    XUL= -2.99720 YUL= 31.80334 ZUL= 15.0
    XLR= 41.96334 YLR=-38.32606 ZLR= 15.0
    UAX=1.0     VDN=-1.0    NAX=130
  END PLOT

  END DATA
```

# CHAPTER 7: ROUTINE SHIPPING CONTAINER UTILIZATION SUMMARY OPERATING PROCEDURES

The following information contains the significant events relating to the routine use of fuel assembly shipping containers. Complete detailed instructions are outlined within the individual plant operating procedures and quality control instructions pertinent to each specific operation.

## 7.1 RECEIVE FUEL ASSEMBLY SHIPPING CONTAINER

7.1.1 Unload the shipping container from the truck.

7.1.2 Report any obvious damage to supervisor.

7.1.3 Prepare a container identification route card.

## 7.2 CLEAN SHIPPING CONTAINER

7.2.1 Use soap or a suitable detergent and water to clean the container.

7.2.2 Hose down the container and direct a high pressure water stream around the flange area.

7.2.3 Move the container into the building and open.

7.2.4 Inspect for water leaks in the flange area.

## 7.3 REFURBISH SHIPPING CONTAINER

7.3.1 Repair any water leaks found and remove excess water from container.

7.3.2 Check container shell closure fasteners and repair damaged or rusted fasteners. Lubricate fasteners and torque.

7.3.3 Paint repaired and damaged paint areas on the container with Dupont Imron paint.

7.3.4 Inspect container support frame clamp pads and repair if necessary.

## 7.4 PREPARE CONTAINER FOR FUEL ASSEMBLY LOADING

7.4.1 Configure fuel assembly clamping frame.

7.4.2 Place and secure spacer blocks in container as needed.

7.4.3 Configure top closure jack screws.

7.4.4 Install absorber plates specific to the fuel assembly types to be loaded. For enrichments greater than 4.65% (for MCC-3 and MCC-4) or 4.80% (for MCC-5), an additional set of gadolinium plates is required.

1. MCC-3 and MCC-4 containers have vertical gadolinium absorber plates installed between the fuel assemblies, which must be in place for all enrichments of fuel assemblies. For enrichments greater than 4.65 wt%, additional segmented horizontal absorber plates are installed beneath the strongback per note I of drawing MCCL301 and note M of drawing MCCL401.

2. The MCC-5 containers have both the vertical and segmented horizontal absorber plates, as described above for the MCC-3 and MCC-4 containers, permanently installed per note M of drawing MCCL501; these plates must be in place for all enrichments of fuel assemblies. For enrichments greater than 4.80 wt%, additional absorber plates which are shaped to conform to the vee-shape of the fuel assemblies are installed on the upper side of the strongback between the grid support blocks per note P of drawing MCCL501.

7.4.5 Repair or replace as necessary the container gasket.

7.4.6 Configure and place shock mounts.

7.4.7 Verify that accelerometers are sealed, calibrated, and not tripped. Replace if required.

## 7.5 INSPECTION

7.5.1 Verify that the container interior and exterior are clean, well painted, and in good condition.

7.5.2 Verify that the required internal hardware is present and in good working condition.

7.5.3 Verify that the required decals, license plates, labels, stencil markings, etc. are present and legible.

7.5.4 Verify that the required absorber plates are properly installed.

7.5.5 Verify that outstanding QCDN's and FOR's have been cleared prior to release for loading.

## 7.6 FUEL ASSEMBLY LOADING

7.6.1 Open shipping container.

7.6.2 Visually verify that correct shipping container absorber plates are installed prior to loading fuel assemblies. (See Section 7.4.4).

7.6.3 Configure and place outriggers.

7.6.4 Extend lateral cross bars and secure to support pads.

7.6.5 Run jacking nuts toward pressure pads as far as possible.

7.6.6 Open clamping frames and top closure assemblies.

7.6.7 Place and secure support frame in vertical position. Each clamping frame on the support frame side to be loaded shall be opened as far as possible. The associated pressure pads shall be retracted as far as the jacking nut.

7.6.8 Place the fuel assembly in the support frame.

7.6.9 Adjust the alignment of bottom, middle and top clamping frames to associated fuel assembly grids.

7.6.10 Close the bottom, middle and top clamping frames around the fuel assembly and tighten the frame fastener nuts.

7.6.11 Snug the bottom, middle and top clamping frame pressure pads against the fuel assembly grid in order. The side pressure pad shall be snugged before the top pressure pad in each case.

7.6.12 Load the second fuel assembly in a similar manner.

7.6.13 Verify the absence of debris on and in the container shell lower subassembly. Remove debris as required.

7.6.14 Release stabilizing bars and lock in storage position.

7.6.15 Lower support frame into horizontal position.

7.6.16 Release cross bars. Retract and lock in storage configuration.

7.6.17 Retract and secure the outriggers.

7.6.18 Close the remaining clamping frames around the fuel assembly and tighten their clamping frame fastener nuts.

7.6.19 Pull plastic wrapper through the gap between pressure pads so that only a single layer encloses the grid.

7.6.20 Align pressure pads with grids such that grid springs are not visible along either long side of the pressure pad.

7.6.21 Torque the jacking nuts starting with the bottom clamping frame and working up the fuel assembly.

7.6.22 Close and secure top closure assemblies.

7.6.23 Check all fasteners and plastic wrapper for correct configuration.

7.6.24 Engage shock mount frame swing bolts with support frame clamp pads and tighten nut until it is "snug-tight." Turn nut an additional one-half turn.

## 7.7 INSPECTION

7.7.1 Verify that the fuel assemblies and core components have been released and the proper component is being shipped with the assembly.

7.7.2 Verify that the plastic is installed correctly.

7.7.3 Verify that the enrichment of the fuel assemblies loaded into each container does not exceed the applicable maximum permissible per Section 7.4.4.

7.7.4 Verify that the fuel assemblies are properly oriented in the container.

7.7.5 Verify the number of shock mounts is correct and accelerometers are sealed, calibrated and not tripped.

7.7.6 Verify that clamps, shock mount frame swing bolts, etc. are tightened.

7.7.7 Verify general cleanliness and absence of debris on container internals, fuel assembly, plastic wrapper, container flange and container shell lower subassembly prior to closing the container.

7.7.8 Verify placement and integrity of shipping container gasket.

## 7.8 CLOSE SHIPPING CONTAINER

7.8.1 Verify that the cover flange is free of debris and place cover on container.

7.8.2 Tighten container closure fasteners to secure cover.

7.8.3 Install one approved tamper proof security seal on each end of the container.

## 7.9 INSPECTION

7.9.1 Verify that the container lid is properly seated and all closure bolts are present.

7.9.2 Verify that outriggers are present.

## 7.10 TRUCK LOADING OF SHIPPING CONTAINERS

7.10.1 Place shipping container on trailer equipped to permit chaining down of container.

7.10.2 Center and place container lengthwise on trailer.

7.10.3 Secure containers to trailer bed with stops.

7.10.4 Chain containers to trailer using "come along" tighteners and chains of 3/8 inch minimum diameter.

## 7.11 REGULATORY

7.11.1 Conduct direct alpha surveys on both the containers and the accessible areas of the flatbed.

7.11.2 Perform the removable alpha and beta-gamma external smear surveys on both the containers and the accessible areas of the flatbed. If any single alpha measurement exceeds 220 dpm/100cm$^2$ or beta-gamma measurement exceeds 2200 dpm/100cm$^2$, notify Regulatory Engineering for instructions on decontamination.

## 7.12 INSPECTION

7.12.1 Verify that containers are properly stacked and secured.

7.12.2 Verify that required Health Physics, Radioactive and any other placards or labels have been properly placed.

7.12.3 Verify that two tamper proof security seals have been properly placed on each container.

# APPENDIX 7-1
# REFERENCES

## REFERENCES

No documents referenced in the text of this section.

# CHAPTER 8: ACCEPTANCE TESTS, MAINTENANCE PROGRAM AND RECERTIFICATION PROGRAM

## 8.1 ACCEPTANCE TESTS

MCC Shipping Containers may be acquired by Westinghouse as newly constructed containers, individual parts assembled on site into new containers or conversion of RCC to MCC containers. In each instance, all critical parts and materials are obtained from qualified suppliers. These suppliers are routinely evaluated for compliance under the plant's quality surveillance program. Additionally, each container is subjected to both direct and statistical quality control inspections prior to first use. Should unacceptable components be found, they are replaced or repaired before the container is released for use.

## 8.2 MAINTENANCE PROGRAM

Every container is processed through routine refurbishment activities prior to each use. The specifics of each phase of the program are described below.

8.2.1 Clean the container and check for leaks.

8.2.2 Visually inspect the exterior and interior for obvious defects and repair or replace as necessary.

8.2.3 Inspect the cork surface and repair or replace as necessary.

8.2.4 Inspect the internal components and safety significant nuts, bolts, and pins, for obvious defects and repair or replace as necessary.

8.2.5 Visually inspect the gadolinium absorber plates and corresponding tamper seal.

8.2.6 Visually inspect safety significant welds, flanges, and markings.

8.2.7 Q.C. Inspect and release prior to use.

## 8.3 RECERTIFICATION PROGRAM

On a periodic basis (not to exceed five years), containers will be inspected to verify the existing configuration to drawing requirements. Quality control Instructions and Mechanical Operating Procedures will define the specific inspection requirements. Safety related components as identified in approved verification plans will be inspected for compliance to key drawings characteristics and for correct configuration on the container. A detailed visual inspection will be conducted of the visible side of the gadolinium absorber plates. Personnel will:

8.3.1 Visually inspect to verify that no more than seven (7) square inches total area of coating is missing.

8.3.2 Verify no single area greater than one (1) square inch of coating is missing.

8.3.3 Visually verify that the coating is not flaking off or blistering.

These plates will be repaired or replaced if defects are found.

Documentation relating to these inspections, repairs, part replacements, etc. will be produced and subsequently maintained via the existing plant records program.

# APPENDIX 8-1
# REFERENCES

## REFERENCES

No documents referenced in the text of this section.

## Enclosure 2 - Proposed wording for Certificate of Compliance USA/9239/AF

(b) Contents

(1) Type and form of material

Unirradiated PWR uranium dioxide fuel assemblies with a maximum uranium-235 enrichment of 5.0 weight percent.

The fuel assemblies shall meet the specifications given in Westinghouse Drawing No. 6481 E I5, Rev. 4, and in the following tables of Appendix 1-4 of the application, as supplemented:

| | |
|---|---|
| Table 1-5-1, Rev. 12 | Fuel Assembly Parameters 14x1 4 Type Fuel Assemblies |
| Table 1-5-2, Rev. 12 | Fuel Assembly Parameters 15x1 5 Type Fuel Assemblies |
| Table 1-5-3, Rev. 12 | Fuel Assembly Parameters 16x1 6 Type Fuel Assemblies* |
| Table 1-5-4, Rev. 12 | Fuel Assembly Parameters 17x1 7 Type Fuel Assemblies* |
| Table 1-5-5, Rev. 12 | Fuel Assembly Parameters VVER-1000 Type Fuel Assembly** |

* 16x16 CE fuel assemblies and the 17x17 W-STDIXL fuel assemblies may be shipped only in the Model No. MCC-4 package.

** VVER-1000 fuel assemblies may be shipped only in the Model No. MCC-5 package.

UNITED STATES
NUCLEAR REGULATORY COMMISSION
WASHINGTON, D.C. 20555-0001

April 25, 2006

Mr. Norman A. Kent
Manager Transport Licensing and Regulation Compliance
Nuclear Material Supply
Westinghouse Electric Company
P.O. Drawer R
Columbia, South Carolina 29250

SUBJECT: CERTIFICATE OF COMPLIANCE NO. 9239 FOR MODEL NUMBERS MCC-3, MCC-4, AND MCC-5 PACKAGING

Dear Mr. Kent:

Enclosed is Certificate of Compliance (CoC) No. 9239, Revision No. 14, for the Model Nos. MCC-3, MCC-4, and MCC-5. This change incorporates NRC's new practice of allowing the continued use of the previous revision of a CoC for up to one year. Changes made to the enclosed certificate are indicated by vertical lines in the margin. The staff's Safety Evaluation Report is also enclosed.

Those on the attached list have been registered as users of the package under the general license provisions of 10 CFR §71.17 or 49 CFR §173.471. The approval constitutes authority to use the package for shipment of radioactive material and for the package to be shipped in accordance with the provisions of 49 CFR §173.471. Registered users may request by letter to remove their names from the Registered Users List.

If you have any questions regarding this certificate, please contact me at (301) 415-7298 or Stewart W. Brown of my staff at (301) 415-8531.

Sincerely,

Robert A. Nelson, Chief
Licensing Section
Spent Fuel Project Office
Office of Nuclear Material Safety
and Safeguards

Docket No. 71-9239

Enclosures:
1. CoC No. 9239, Rev. No 14
2. Safety Evaluation Report

cc w/encls: R. Boyle, Department of Transportation
J. Schuler, Department of Energy
RAMCERTS

# CERTIFICATE OF COMPLIANCE
## FOR RADIOACTIVE MATERIAL PACKAGES

| 1. a. CERTIFICATE NUMBER | b. REVISION NUMBER | c. DOCKET NUMBER | d. PACKAGE IDENTIFICATION NUMBER | PAGE | | PAGES |
|---|---|---|---|---|---|---|
| 9239 | 14 | 71-9239 | USA/9239/AF | 1 | OF | 4 |

2. PREAMBLE

a. This certificate is issued to certify that the package (packaging and contents) described in Item 5 below meets the applicable safety standards set forth in Title 10, Code of Federal Regulations, Part 71, "Packaging and Transportation of Radioactive Material."

b. This certificate does not relieve the consignor from compliance with any requirement of the regulations of the U.S. Department of Transportation or other applicable regulatory agencies, including the government of any country through or into which the package will be transported.

3. THIS CERTIFICATE IS ISSUED ON THE BASIS OF A SAFETY ANALYSIS REPORT OF THE PACKAGE DESIGN OR APPLICATION

a. ISSUED TO *(Name and Address)*

Westinghouse Electric Company
LLC (WELCO)
P.O. Box 355
Pittsburgh, PA 15230

b. TITLE AND IDENTIFICATION OF REPORT OR APPLICATION

Westinghouse Electric Corporation application dated February 14, 2002, as supplemented.

4. CONDITIONS

This certificate is conditional upon fulfilling the requirements of 10 CFR Part 71, as applicable, and the conditions specified below.

5.

(a) Packaging

(1) Model Nos.: MCC-3, MCC-4, and MCC-5

(2) Description

The MCC packages are shipping containers for unirradiated uranium oxide fuel assemblies. The packagings consist of a steel fuel element cradle assembly equipped with a strongback and an adjustable fuel element clamping assembly. The cradle assembly is shock mounted to a 13-gauge carbon steel outer container by shear mounts. The MCC-3 container is closed with thirty ½-inch T-bolts. The MCC-4 and MCC-5 containers are closed with fifty ½-inch T-bolts.

The MCC-3 and MCC-4 containers are permanently equipped with vertical $Gd_2O_3$ neutron absorber plates that are mounted on the center wall of the strongback. Additional horizontal $Gd_2O_3$ neutron absorber plates, mounted on the underside of the strongback, are required for the contents as specified.

The MCC-5 container is permanently equipped with both the vertical and horizontal $Gd_2O_3$ neutron absorber plates. Additional vee-shaped, guided $Gd_2O_3$ neutron absorber plates are required for the contents as specified.

Approximate dimensions of the MCC-3 packaging are 44-1/2 inches O.D. by 194-1/2 inches long. The gross weight of the packaging and contents is 7,544 pounds. The maximum weight of the contents is 3,300 pounds.

Approximate dimensions of the MCC-4 packaging are 44-1/2 inches O.D. by 226 inches long. The gross weight of the packaging and contents is 10,533 pounds. The maximum weight of the contents is 3,870 pounds.

5. (a) Packaging (continued)

Approximate dimensions of the MCC-5 packaging are 44-1/2 inches O.D. by 226 inches long. The gross weight of the packaging and contents is 10,533 pounds. The maximum weight of the contents is 3,700 pounds.

(3) Drawings

The MCC-3 packaging is constructed in accordance with Westinghouse Electric Corporation Drawing No. MCCL301, Sheets 1, 2, 3, and 4, Rev. 6.

The MCC-4 packaging is constructed in accordance with Westinghouse Electric Corporation Drawing No. MCCL401, Sheets 1, 2, 3, 4, and 5, Rev. 9.

The MCC-5 packaging is constructed in accordance with Westinghouse Electric Corporation Drawing No. MCCL501, Sheets 1 through 10, Rev. 6.

(b) Contents

(1) Type and form of material

Unirradiated PWR uranium dioxide fuel assemblies with a maximum uranium-235 enrichment of 5.0 weight percent.

The fuel assemblies shall meet the specifications given in Westinghouse Drawing No. 6461E15, Rev. 5, and in the following tables of Appendix 1-4 of the application, as supplemented:

| | |
|---|---|
| Table 1-4.1, Rev. 10 | Fuel Assembly Parameters<br>14x14 Type Fuel Assemblies |
| Table 1-4.2, Rev. 10 | Fuel Assembly Parameters<br>15x15 Type Fuel Assemblies |
| Table 1-4.3, Rev. 10 | Fuel Assembly Parameters<br>16x16 Type Fuel Assemblies* |
| Table 1-4.4, Rev. 10 | Fuel Assembly Parameters<br>17x17 Type Fuel Assemblies* |
| Table 1-4.5, Rev. 10 | Fuel Assembly Parameters<br>VVER-1000 Type Fuel Assembly** |

* 16x16 CE fuel assemblies and the 17x17 W-STD/XL fuel assemblies may be shipped only in the Model No. MCC-4 package.

** VVER-1000 fuel assemblies may be shipped only in the Model No. MCC-5 package.

5. (b) Contents (continued)

(2) Maximum quantity of material per package

Two (2) fuel assemblies

(c) Transport Index for Criticality Control (Criticality Safety Index)

Minimum transport index to be shown on label for nuclear criticality control: 0.4

6. (a) For shipments of 14x14, 15x15, 16x16, and 17x17 fuel assemblies with U-235 enrichments of over 4.65 wt% and up to 5.0 wt%, horizontal $Gd_2O_3$ neutron absorber plates shall be positioned underneath each assembly. The horizontal absorber plates shall be placed horizontally on the underside of the strongback, as specified in the respective drawings in Condition 5(a)(3) for the MCC-3 and MCC-4 models.

(b) For shipments of 17x17 STANDARD lattice fuel assemblies (17x17 STD and 17x17 XL) with U-235 enrichments of over 4.85 wt% and up to 5.0 wt%, horizontal $Gd_2O_3$ neutron absorber plates shall be positioned underneath each assembly. The horizontal absorber plates shall be placed horizontally on the underside of the strongback, as specified in the respective drawings in Condition 5(a)(3) for the MCC-3 and MCC-4 models.

7. For shipments of VVER-1000 fuel assemblies with U-235 enrichments of over 4.80 wt% and up to 5.0 wt%, a guided $Gd_2O_3$ neutron absorber plate shall be positioned underneath each assembly. The guided absorber plates shall be placed horizontally on the topside of the strongback, as specified in the drawings in Condition 5(a)(3) for the MCC-5 model.

8. Each fuel assembly must be unsheathed or must be enclosed in an unsealed plastic sheath which may not extend beyond the ends of the fuel assembly. The ends of the sheath may not be folded or taped in any manner that would prevent flow of liquids into or out of the sheathed fuel assembly.

9. The dimensions, minimum $Gd_2O_3$ loading and coating specifications, and acceptance testing of the neutron absorber plates shall be in accordance with the "$Gd_2O_3$ Neutron Absorber Plates Specifications," Appendix 1-6, Rev. 10, of the application, as supplemented. The minimum $Gd_2O_3$ coating areal density on the vertical and horizontal neutron absorber plates shall be 0.054 g-$Gd_2O_3$/cm$^2$. The minimum $Gd_2O_3$ coating areal density on guided neutron absorber plates shall be 0.027 g-$Gd_2O_3$/cm$^2$.

10. In addition to the requirements of Subpart G of 10 CFR Part 71:

(a) Each package shall be prepared for shipment and operated in accordance with the "Routine Shipping Container Utilization Summary Operating Procedures," in Chapter 7 of the application, as supplemented; and

(b) Each package shall be tested and maintained in accordance with the "Acceptance Tests, Maintenance Program, and Recertification Program," in Chapter 8 of the application, as supplemented, and as specified in the respective drawings in Condition 5(a)(3) for the MCC-3, MCC-4, and MCC-5 models.

11. The package authorized by this certificate is hereby approved for use under the general license provisions of 10 CFR §71.17.

12. Revisions Nos. 12 and 13 of this certificate may be used until March 31, 2007.

13. Expiration date: March 31, 2007.

REFERENCES

Westinghouse Electric Corporation application dated February 14, 2002.

Supplements dated: March 6, 2002, and January 25, 2006.

FOR THE U.S. NUCLEAR REGULATORY COMMISSION

Robert A. Nelson, Chief
Licensing Section
Spent Fuel Project Office
Office of Nuclear Material Safety
and Safeguards

Date: April 25, 2006

SAFETY EVALUATION REPORT

Docket No. 71-9239
Model Nos. MCC-3, MCC-4, and MCC-5
Certificate of Compliance No. 9239
Revision No. 14

## SUMMARY

The U.S. Nuclear Regulatory Commission (NRC) staff (the staff) made a change to Westinghouse Electric Company's Certificate of Compliance (CoC) No. 9239. This change incorporates the staff's new practice of allowing the continued use of the previous revision of a CoC for up to one year.

CoC No. 9239 has been amended to allow the use of CoC No. 9239, Revisions Nos. 12 and 13 until April 30, 2007. The staff has determined that this change does not affect the ability of the package to meet the requirements of 10 CFR Part 71.

## EVALUATION

Recently, the staff has adopted a new practice of allowing the continued use of previous revisions of a CoC for a period up to one year after issuance of a new revision. The staff's previous practice was for the revised CoC to supersede, in its entirety, the previous revision of the CoC. The staff's new practice was adopted in response to industry representatives' statements. Industry representatives stated that once NRC has issued a CoC revision it may take up to one year to receive necessary revalidations from foreign governments for use of the packaging in their country. Thus, during this revalidation period the use of these packages could be disrupted. The staff views this type of change as administrative and does not affect the ability of the package to meet the requirements of 10 CFR Part 71.

## CONCLUSION

Certificate of Compliance No. 9239 has been amended to include a new Condition No. 12. This new condition reads as follows:

> 12. Revisions Nos. 12 and 13 of this certificate may be used until March 31, 2007.

The staff has determined that this change does not affect the ability of the package to meet the requirements of 10 CFR Part 71.

Issued with Certificate of Compliance No. 9239, Revision No. 14,
on April 25, 2006.

**Table 6-3-14 Listing of KENO Input for Optimum Moderation Evaluation**

```
TITLE-CASK WITH 17X17 STD 5.00 W/O ASSEMBLY, 0.02 G/CC H20

  READ PARAMETERS
    TME=6.0    RUN=YES    PLT=YES
    GEN=900    NPG=300    NSK=005    LIB=41
    XS1=YES    NUB=YES
  END PARAMETERS

  READ MIXTURE    SCT=2
  MIX= 1
  '  UO2 PELLET 5.00 W/O (96.5% TD, 0% DISH)
             192235      0.0011942
             192238      0.022404
              18016      0.047196
  MIX= 2
  '  ZIRC FUEL ROD CLADDING
             240302      0.043326
  MIX= 3
  '  H2O AT 0.02 G/CC (REFERENCE 1.0 G/CC H=0.066854, O=0.033427)
              31001      0.001337
              38016      0.000669
  MIX= 4
  '  CARBON STEEL FOR STRONGBACK & SHELL
              36012      4.728898E-4
             315031      5.807008E-5
             316032      6.642906E-5
             325055      3.877064E-4
             326000      8.420119E-2
  MIX= 5
  '  GADOLINIA OXIDE ABSORBER (0.02 GM GD2O3/CM2 @ 0.01016 CM THICKNESS)
              48016      9.810529E-3
             464152      1.308071E-5
             464154      1.373474E-4
             464155      9.679722E-4
             464156      1.347313E-3
             464157      1.026835E-3
             464158      1.622008E-3
             464160      1.425792E-3
  MIX= 6
  '  CARBON STEEL SHEET FOR GD ABSORBER
              56012      4.728898E-4
             515031      5.807008E-5
             516032      6.642906E-5
             525055      3.877064E-4
             526000      8.420119E-2
  END MIXTURE

  READ GEOMETRY
  UNIT 1       COM='STD FUEL ROD'
      CYLINDER  1 1    0.409575 2P31.75
      CYLINDER  0 1    0.41783  2P31.75
      CYLINDER  2 1    0.47498  2P31.75
      CUBOID    3 1 4P0.62992  2P31.75
  UNIT 2       COM='STD GT OR IT'
      CYLINDER  3 1    0.57150  2P31.75
      CYLINDER  2 1    0.61214  2P31.75
      CUBOID    3 1 4P0.62992  2P31.75
```

**Table 6-3-14 Listing of KENO Input for Optimum Moderation Evaluation (cont.)**

```
UNIT 3       COM='ASSEMBLY ON STRONG BACK'
    ARRAY 1 2R0.0 -31.75
    CUBOID    3 1 24.9555   0.0      24.13    0.0      2P31.75
    CUBOID    4 1 24.9555  -0.4572   24.13   -0.4572   2P31.75
UNIT 4       COM='POISON PLATE BETWEEN ASSEMBLY'
    CUBOID    6 1  0.0889   0.0      18.415   0.0      2P31.75
    CUBOID    5 1  0.09906 -0.01016 18.415   0.0      2P31.75
    CUBOID    3 1  0.44069 -2.09931 23.3172 -1.27      2P31.75
    HOLE      8  -2.0993  19.8  0.0
UNIT 5       COM='REST OF STRONGBACK AND CRADLE'
    CUBOID    3 1  7.1051   0.5149  12.1851  0.5149   2P31.75
    CUBOID    4 1  7.62     0.0     12.70    0.0      2P31.75
UNIT 6       COM='CONTAINER FLANGES AND BRACKET'
    CUBOID    4 1  1.285    0.0     22.86    0.0      2P31.75
UNIT 7       COM='SKID ANGLE'
    CUBOID    3 1  7.62     0.9652   7.62    0.9652   2P31.75
    CUBOID    4 1  7.62     0.0      7.62    0.0      2P31.75
UNIT 8       COM='UNISTRUT CHANNEL ASSEMBLY'
    CUBOID    3 1  1.799    0.0      3.5     0.7398   2P31.75
    CUBOID    4 1  2.539    0.0      3.5     0.0      2P31.75
UNIT 9       COM='TOP CLAMPING ASSEMBLY'
    CUBOID    4 1 27.94     0.0      5.08    0.0     2P2.5964
UNIT 10      COM='SIDE CLAMPING ASSEMBLY'
    CUBOID    4 1  5.08     0.0     29.21    0.0     2P2.5964
GLOBAL
UNIT 14      COM='CASK MODEL WITH STRUCTURE'
    ARRAY 2 2R0.0 -31.75
    CUBOID    3 1 44.73448  0.0  32.03448  -37.6428  2P31.75
    HOLE      5   28.0  -13.0  0.0
    HOLE      6   43.0  -15.0  0.0
    HOLE      7   35.0  -37.0  0.0
    HOLE      9   1.27   25.4  0.0
    HOLE     10  29.21   1.27  0.0
    CUBOID    4 1 44.96058  0.0  32.26058  -37.8689  2P31.75
END GEOMETRY

READ ARRAY
ARA=1 NUX=17 NUY=17 NUZ=1
  FILL
  39R1 2 2Q3 8R1 2 9R1 2 22R1 2 4Q3 19R1 2Q51
  3R1 2 9R1 2 8R1 2 2Q3 39R1
  END FILL
ARA=2 NUX=2 NUY=1 NUZ=1
  FILL
  4 3
  END FILL
END ARRAY

READ BOUNDS
  ALL=SPECULAR
END BOUNDS

READ PLOT
  TTL='X-Y SLICE THRU Z=0 TO CONTAINER BOUND FOR 132X132 PRINT'
  PIC=UNIT  PLT=YES
  XUL=0.0          YUL=32.26058    ZUL=0.0
  XLR=44.96058     YLR=-37.8689    ZLR=0.0
```

**Table 6-3-14 Listing of KENO Input for Optimum Moderation Evaluation (cont.)**

```
    UAX=1.0     VDN=-1.0     NAX=114  NDN=131
    END
    TTL='X-Y SLICE THRU Z=0 TO CONTAINER BOUND FOR 132X132 PRINT'
    PIC=MAT   NCH=' ...*.'
    XUL=0.0         YUL=32.26058    ZUL=0.0
    XLR=44.96058    YLR=-37.8689    ZLR=0.0
    UAX=1.0     VDN=-1.0     NAX=114  NDN=131
  END PLOT

  END DATA
```

**Table 6-3-15 Listing of KENO Input for Optimum Moderation Evaluation (Lumped Structure)**

```
TITLE-CASK WITH 17X17 STD 5.00 W/O ASSEMBLY, 0.02 G/CC H20, LUMPED STRUCTURE

READ PARAMETERS
  TME=6.0    RUN=YES    PLT=YES
  GEN=900    NPG=300    NSK=005    LIB=41
  XS1=YES    NUB=YES
END PARAMETERS

READ MIXTURE    SCT=2
MIX= 1
'  UO2 PELLET 5.00 W/O (96.5% TD, 0% DISH)
          192235      0.0011942
          192238      0.022404
           18016      0.047196
MIX= 2
'  ZIRC FUEL ROD CLADDING
          240302      0.043326
MIX= 3
'  H2O AT 0.02 G/CC (REFERENCE 1.0 G/CC H=0.066854, O=0.033427)
           31001      0.001337
           38016      0.000669
MIX= 4
'  CARBON STEEL FOR STRONGBACK & SHELL
           36012      4.728898E-4
          315031      5.807008E-5
          316032      6.642906E-5
          325055      3.877064E-4
          326000      8.420119E-2
MIX= 5
'  GADOLINIA OXIDE ABSORBER (0.02 GM GD2O3/CM2 @ 0.01016 CM THICKNESS)
           48016      9.810529E-3
          464152      1.308071E-5
          464154      1.373474E-4
          464155      9.679722E-4
          464156      1.347313E-3
          464157      1.026835E-3
          464158      1.622008E-3
          464160      1.425792E-3
MIX= 6
'  CARBON STEEL SHEET FOR GD ABSORBER
           56012      4.728898E-4
          515031      5.807008E-5
          516032      6.642906E-5
          525055      3.877064E-4
          526000      8.420119E-2
END MIXTURE

READ GEOMETRY
  UNIT 1    COM='STD FUEL ROD'
    CYLINDER  1 1   0.409575 2P31.75
    CYLINDER  0 1   0.41783  2P31.75
    CYLINDER  2 1   0.47498  2P31.75
    CUBOID    3 1 4P0.62992  2P31.75
  UNIT 2    COM='STD GT OR IT'
    CYLINDER  3 1   0.57150  2P31.75
    CYLINDER  2 1   0.61214  2P31.75
    CUBOID    3 1 4P0.62992  2P31.75
```

**Table 6-3-15 Listing of KENO Input for Optimum Moderation Evaluation (Lumped Structure) (cont.)**

```
   UNIT 3     COM='ASSEMBLY ON STRONG BACK'
     ARRAY 1 2R0.0 -31.75
     CUBOID     3 1 24.9555   0.0      24.13    0.0      2P31.75
     CUBOID     4 1 24.9555  -0.4572  24.13   -0.4572  2P31.75
   UNIT 4     COM='POISON PLATE BETWEEN ASSEMBLY'
     CUBOID     6 1  0.0889   0.0      18.415   0.0      2P31.75
     CUBOID     5 1  0.09906 -0.01016 18.415   0.0      2P31.75
     CUBOID     3 1  0.44069 -2.09931 23.3172 -1.27     2P31.75
   UNIT 5     COM='LUMPED CS STRUCTURE (5654.27 CC)'
     CUBOID     4 1  9.43629  0.0      9.43629 0.0      2P31.75
   GLOBAL
   UNIT 6
     ARRAY 2 2R0.0 -31.75
     CUBOID     3 1 44.73448  0.0  32.03448  -37.6428  2P31.75
     HOLE 5  34.0 -36.0 0.0
     CUBOID     4 1 44.96058  0.0  32.26058  -37.8689  2P31.75
 END GEOMETRY

 READ ARRAY
 ARA=1 NUX=17 NUY=17 NUZ=1
   FILL
   39R1 2 2Q3 8R1 2 9R1 2 22R1 2 4Q3 19R1 2Q51
   3R1 2 9R1 2 8R1 2 2Q3 39R1
   END FILL
 ARA=2 NUX=2  NUY=1  NUZ=1
   FILL
   4 3
   END FILL
 END ARRAY

 READ BOUNDRY
   ALL=SPEC
 END BOUNDRY

 READ PLOT
   TTL='X-Y SLICE THRU Z=0 TO CONTAINER BOUND FOR 132X132 PRINT'
   PIC=UNIT        NCH=' 123456'
   XUL=0.0         YUL=32.26058    ZUL=0.0
   XLR=44.96058    YLR=-37.8689    ZLR=0.0
   UAX=1.0     VDN=-1.0     NAX=114  NDN=131
   END
   TTL='X-Y SLICE THRU Z=0 TO CONTAINER BOUND FOR 132X132 PRINT'
   PIC=MAT         NCH=' ..wsgp'
   XUL=0.0         YUL=32.26058    ZUL=0.0
   XLR=44.96058    YLR=-37.8689    ZLR=0.0
   UAX=1.0     VDN=-1.0     NAX=114  NDN=131
 END PLOT

 END DATA
```

**Table 6-3-16 Listing of KENO Input for Packed Fuel Rod Evaluation**

```
TITLE-CASK WITH 19X19 CE1 5.00 W/O ASSEMBLY

READ PARAMETERS
  TME=16.5  RUN=YES   PLT=YES
  GEN=900   NPG=300   NSK=5   LIB=41
  XS1=YES   NUB=YES   FAR=NO
END PARAMETERS

READ MIXT  SCT=2
MIX= 1
'  UO2 PELLET 5.00 W/O (96.5% TD, 0% DISH)
          1392235     0.0011942
          1392238     0.022404
            18016     0.047196
MIX= 2
'  ZIRC FUEL ROD CLADDING
           240302     0.043326
MIX= 3
'  H2O AT 1.00 G/CC
            31001     0.066854
            38016     0.033427
MIX= 4
'  CARBON STEEL FOR STRONGBACK & SHELL
            36012     4.728898E-4
           315031     5.807008E-5
           316032     6.642906E-5
           325055     3.877064E-4
           326000     8.420119E-2
MIX= 5
'  GADOLINIA OXIDE ABSORBER (0.02 GM GD2O3/CM2 @ 0.01016 CM THICKNESS)
            48016     9.810529E-3
           464152     1.308071E-5
           464154     1.373474E-4
           464155     9.679722E-4
           464156     1.347313E-3
           464157     1.026835E-3
           464158     1.622008E-3
           464160     1.425792E-3
MIX= 6
'  CARBON STEEL SHEET FOR GD ABSORBER
            56012     4.728898E-4
           515031     5.807008E-5
           516032     6.642906E-5
           525055     3.877064E-4
           526000     8.420119E-2
END MIXT

READ GEOMETRY
UNIT 1
COM=" 19X19 CE1 FUEL ROD "
CYLINDER    1  1    0.478155  30.0  0.0
CYLINDER    0  1    0.48768   30.0  0.0
CYLINDER    2  1    0.55880   30.0  0.0
CUBOID      3  1  4P0.55880   30.0  0.0
UNIT 2
COM=" BOTTOM EDGE OF CS STRONGBACK "
CUBOID      4  1   24.95550   0.0       0.0      -0.45720  30.0  0.0
```

**Table 6-3-16 Listing of KENO Input for Packed Fuel Rod Evaluation (cont.)**

```
UNIT 3
COM=" VERTICAL EDGE OF CS STRONGBACK "
CUBOID      4  1    0.0       -0.45720  24.13000  -0.45720  30.0  0.0
UNIT 4
COM=" GADOLINIA ABSORBER PANEL "
CUBOID      6  1    0.04445  -0.04445  18.41500   0.0      30.0  0.0
CUBOID      5  1    0.05461  -0.05461  18.41500   0.0      30.0  0.0
GLOBAL
UNIT 5
COM=" 19X19 CE1 FUEL PINS IN CASK "
ARRAY 1   0.0        0.0       0.0
REPLICATE   3  1   20.32000   2.99720  10.16000  38.10000   0.0  0.0  1
HOLE 2    0.0        0.0       0.0
HOLE 3    0.0        0.0       0.0
HOLE 4   -0.85344    0.81280   0.0
REPLICATE   4  1    0.22606   0.0       0.22606   0.22606   0.0  0.0  1
END GEOM

READ ARRAY
ARA=1 NUX=19 NUY=19 NUZ=1 COM=" 19X19 BUNDLE OF FUEL RODS "
FILL F1 END FILL
END ARRAY

READ BOUNDS
ALL=SPECULAR
END BOUNDS

READ PLOT
  TTL='BOX SLICE THROUGH CASK MODEL '
  PIC=BOX
  NCH='0.GBHVA*'
  XUL= -2.99720 YUL= 31.01086 ZUL= 15.0
  XLR= 41.17086 YLR=-38.32606 ZLR= 15.0
  UAX=1.0    VDN=-1.0   NAX=130
END
  TTL='MAT SLICE THROUGH CASK MODEL '
  PIC=MAT
  NCH='0.ZWSGS'
  XUL= -2.99720 YUL= 31.01086 ZUL= 15.0
  XLR= 41.17086 YLR=-38.32606 ZLR= 15.0
  UAX=1.0    VDN=-1.0   NAX=130
END PLOT
END DATA
```

**Table 6-3-17 Listing of KENO Input for Water in Fuel Pin Gap**

```
 READ PARAMETERS
  TME=9.0    RUN=YES    PLT=YES
  GEN=900    NPG=300    NSK=005    LIB=41
  XS1=YES    NUB=YES
END PARAMETERS

READ MIXT       SCT=2
MIX= 1
'  UO2 PELLET 4.80 W/O (96.5% TD, 0% DISH)
           192235      0.0011465
           192238      0.022451
            18016      0.047195
MIX= 2
'  ZIRC FUEL ROD CLADDING
           340302      0.043326
MIX= 3
'  OUTER H2O AT 1.00 G/CC
            41001      0.066854
           418016      0.033427
MIX= 4
'  CARBON STEEL FOR STRONGBACK & SHELL
            46012      4.728898E-4
           315031      5.807008E-5
           416032      6.642906E-5
           425055      3.877064E-4
           426000      8.420119E-2
MIX= 5
'  GADOLINIA OXIDE ABSORBER (0.02 GM GD2O3/CM2 @ 0.01016 CM
THICKNESS)
            48016      9.810529E-3
           464152      1.308071E-5
           464154      1.373474E-4
           464155      9.679722E-4
           464156      1.347313E-3
           464157      1.026835E-3
           464158      1.622008E-3
           464160      1.425792E-3
MIX= 6
'  CARBON STEEL SHEET FOR GD ABSORBER
            56012      4.728898E-4
           515031      5.807008E-5
           516032      6.642906E-5
           525055      3.877064E-4
           526000      8.420119E-2
MIX= 7
'  GAP H2O AT 1.00 G/CC
            21001      0.066854
            28016      0.033427
END MIXT
READ GEOM

UNIT 1
COM=" 17OFA FUEL ROD (NOBA) - BOTTOM HALF "
ZHEMICYL-Y  1  1    0.392176                                181.5 0.0
ZHEMICYL-Y  7  1    0.40005                                 181.5 0.0
ZHEMICYL-Y  2  1    0.45720                                 181.5 0.0
CUBOID      3  1    0.55209  -0.55209   0.00000  -0.63750   181.5 0.0
```

**Table 6-3-17 Listing of KENO Input for Water in Fuel Pin Gap (cont.)**

```
UNIT 2
COM=" 17OFA FUEL ROD (NOBA) - TOP HALF "
ZHEMICYL+Y  1  1    0.392176                                    181.5 0.0
ZHEMICYL+Y  7  1    0.40005                                     181.5 0.0
ZHEMICYL+Y  2  1    0.45720                                     181.5 0.0
CUBOID      3  1    0.55209  -0.55209   0.63750   0.00000   181.5 0.0

UNIT 3
COM=" VVER 1000 MODIFIED GT/IT - BOTTOM HALF "
ZHEMICYL-Y  3  1    0.4710                                      181.5 0.0
ZHEMICYL-Y  2  1    0.5400                                      181.5 0.0
CUBOID      3  1    0.55209  -0.55209   0.00000  -0.63750   181.5 0.0

UNIT 4
COM=" VVER 1000 MODIFIED GT/IT - TOP HALF "
ZHEMICYL+Y  3  1    0.4710                                      181.5 0.0
ZHEMICYL+Y  2  1    0.5400                                      181.5 0.0
CUBOID      3  1    0.55209  -0.55209   0.63750   0.00000   181.5 0.0

UNIT 5
COM=" EMPTY WATER CELL - TOP OR BOTTOM HALF "
CUBOID      3  1    0.55209  -0.55209   0.63750   0.00000   181.5 0.0

UNIT 6
COM=" UNISTRUT CHANNEL ASSEMBLY"
CUBOID      3  1    1.799  0.0     3.5     0.7398   181.5  0.0
CUBOID      4  1    2.539  0.0     3.5     0.0      181.5  0.0

UNIT 7
COM=" REST OF STRONGBACK AND CRADLE"
CUBOID      3  1    7.1051  0.5149  12.1851 0.5149  181.5  0.0
CUBOID      4  1    7.62    0.0     12.70   0.0     181.5  0.0

UNIT 8
COM=" CONTAINER FLANGES AND BRACKET"
CUBOID      4  1    1.285   0.0     22.86   0.0     181.5  0.0

UNIT 9
COM=" SKID ANGLE"
CUBOID      3  1    7.62    0.9652  7.62    0.9652  181.5  0.0
CUBOID      4  1    7.62    0.0     7.62    0.0     181.5  0.0

UNIT 13
COM=" BOTTOM EDGE OF CS STRONGBACK "
CUBOID      4  1   24.95550   0.0       0.0      -0.45720   181.5  0.0

UNIT 14
COM=" VERTICAL EDGE OF CS STRONGBACK "
CUBOID      4  1    0.0      -0.45720  24.13000  -0.45720   181.5  0.0

UNIT 15
COM=" VERTICAL GADOLINIA ABSORBER PANEL "
CUBOID      6  1    0.04445  -0.04445  18.41500   0.0       181.5  0.0
CUBOID      5  1    0.05461  -0.05461  18.41500   0.0       181.5  0.0
```

**Table 6-3-17 Listing of KENO Input for Water in Fuel Pin Gap (cont.)**

```
UNIT 16
COM=" ONE-SIDED PART-LENGTH GD PANEL UNDER STRONGBACK "
CUBOID      6  1   23.49500   0.0       0.0      -0.08890   33.02 0.0
CUBOID      5  1   23.49500   0.0       0.0      -0.09906   33.02 0.0

UNIT 17
COM=" GAP IN PART-LENGTH GD PANEL UNDER STRONGBACK "
CUBOID      3  1   23.49500   0.0       0.0      -0.09906    5.08 0.0

UNIT 18
COM=" HORIZONTAL GAD ABSORBER PLATE"
ARRAY 2              0.0                -0.09906              0.0

GLOBAL

UNIT 20
COM=" VVER 1000 ASSEMBLY IN CASK "
ARRAY 1              0.0                 1.37160              0.0
CUBOID      3  1   41.73728  -2.99720  38.30660 -38.10000  196.74 0.0

HOLE  6   -2.99715 20.61280   0.0
HOLE  7   28.0    -11.6284    0.0
HOLE  8   40.0    -13.6284    0.0
HOLE  9   32.0    -35.6284    0.0

HOLE 13   0.0       0.0       0.0
HOLE 14   0.0       0.0       0.0
HOLE 15  -0.85344   0.81280   0.0
HOLE 18   0.0      -0.457205  0.0

REPLICATE   4  1  0.22606 0.0  0.22606 0.22606 0.22606 0.0 1
END GEOM

READ ARRAY
ARA=1 NUX=21 NUY=42 NUZ=1 COM=" VVER 1000 ASSEMBLY IN H2O"
LOOP
 1   1  21   1     1  42   1     1   1   1
 2   2  20   2     1  41   2     1   1   1
 2   1  21   2     2  42   2     1   1   1
 3   5   5   1    21  21   1     1   1   1
 4   5   5   1    22  22   1     1   1   1
 3   6   6   1    16  26  10     1   1   1
 4   6   6   1    17  27  10     1   1   1
 3   8   8   1    12  20   8     1   1   1
 4   8   8   1    13  21   8     1   1   1
 3   8   8   1    30  30   1     1   1   1
 4   8   8   1    31  31   1     1   1   1
 3   9   9   1    25  25   1     1   1   1
 4   9   9   1    26  26   1     1   1   1
 3  10  10   1    16  16   1     1   1   1
 4  10  10   1    17  17   1     1   1   1
 3  11  11   1    11  31  10     1   1   1
 4  11  11   1    12  32  10     1   1   1
 3  12  12   1    26  26   1     1   1   1
 4  12  12   1    27  27   1     1   1   1
 3  13  13   1    17  17   1     1   1   1
 4  13  13   1    18  18   1     1   1   1
```

**Table 6-3-17 Listing of KENO Input for Water in Fuel Pin Gap (cont.)**

```
 3  14  14   1    12  22  10     1   1   1
 4  14  14   1    13  23  10     1   1   1
 3  14  14   1    30  30   1     1   1   1
 4  14  14   1    31  31   1     1   1   1
 3  16  16   1    16  26  10     1   1   1
 4  16  16   1    17  27  10     1   1   1
 3  17  17   1    21  21  10     1   1   1
 4  17  17   1    22  22  10     1   1   1
 5   1  10   1     1  42  41     1   1   1
 5   1   9   1     2  41  39     1   1   1
 5   1   8   1     3  40  37     1   1   1
 5   1   7   1     4  39  35     1   1   1
 5   1   6   1     5  38  33     1   1   1
 5   1   5   1     6  37  31     1   1   1
 5   1   4   1     7  36  29     1   1   1
 5   1   3   1     8  35  27     1   1   1
 5   1   2   1     9  34  25     1   1   1
 5   1   1   1    10  33  23     1   1   1
 5  12  21   1     1  42  41     1   1   1
 5  13  21   1     2  41  39     1   1   1
 5  14  21   1     3  40  37     1   1   1
 5  15  21   1     4  39  35     1   1   1
 5  16  21   1     5  38  33     1   1   1
 5  17  21   1     6  37  31     1   1   1
 5  18  21   1     7  36  29     1   1   1
 5  19  21   1     8  35  27     1   1   1
 5  20  21   1     9  34  25     1   1   1
 5  21  21   1    10  33  23     1   1   1
END LOOP
ARA=2 NUX=1  NUY=1  NUZ=11 COM=" HORIZONTAL GAD ABSORBER PLATE
WITH GAPS"
FILL
 17 16 17 17 16 17 17 16 17 17 16
END FILL
END ARRAY

READ BOUNDS
ALL=SPECULAR
END BOUNDS

READ PLOT
  TTL='MAT SLICE THROUGH ASSEMBLY CENTER '
  PIC=MAT
  NCH='0.ZWSGS'
  XUL= 10.75915 YUL= 18.75915 ZUL= 15.0
  XLR= 18.75915 YLR= 10.75915 ZLR= 15.0
  UAX=1.0    VDN=-1.0   NAX=130
END
  TTL='MAT SLICE THROUGH ASSEMBLY ARRAY '
  PIC=MAT
  NCH='0.ZWSGS'
  XUL= -2.99720 YUL= 28.14660 ZUL= 15.0
  XLR= 28.14660 YLR= -2.99720 ZLR= 15.0
  UAX=1.0    VDN=-1.0   NAX=130
END
  TTL='MAT SLICE THROUGH CASK MODEL '
  PIC=MAT
  NCH='0.ZWSGS'
```

**Table 6-3-17 Listing of KENO Input for Water in Fuel Pin Gap (cont.)**

```
  XUL= -2.99720 YUL= 31.80334 ZUL= 15.0
  XLR= 41.96334 YLR=-38.32606 ZLR= 15.0
  UAX=1.0    VDN=-1.0   NAX=130
END PLOT
END DATA
```

**Table 6-3-18 Listing of KENO Input for Cask With 14x14 OFA – 5.0 W/O Assembly (Full Density Water)**

```
title-cask with 14x14 ofa 5.00 w/o assembly

read parameters
  tme=60    run=yes   plt=yes
  gen=300   npg=310   nsk=005   lib=25
  xsl=yes   nub=yes
end parameters

read mixt  sct=2
mix= 1
' solid uo2 pellet 5.00 w/o (96.5% td, 0% dish)
          1192235     0.0011942
          1192238     0.022404
           118016     0.047196
mix= 2
' h2o at 1.00 g/cc in solid pellet gap
           231001     0.066854
           238016     0.033427
mix= 3
' solid zirc fuel rod cladding
         2140302     0.043326
mix= 4
' h2o at 1.00 g/cc in blanket fuel annulus
           151001     0.066854
           158016     0.033427
mix= 5
' annular uo2 pellet 5.00 w/o (96.5% td)
          2292235     0.0011942
          2292238     0.022404
           228016     0.047196
mix= 6
' h2o at 1.00 g/cc in annular pellet gap
           341001     0.066854
           348016     0.033427
mix= 7
' annular zirc fuel rod cladding
          3240302     0.043326
mix= 8
' h2o at 1.00 g/cc
            31001     0.066854
            38016     0.033427
mix= 9
'  carbon steel for strongback & shell
            36012     4.728898e-4
           315031     5.807008e-5
           316032     6.642906e-5
           325055     3.877064e-4
           326000     8.420119e-2
mix= 10
'  gadolinia oxide absorber (0.02 gm gd2o3/cm2 @ 0.01016 cm thickness)
            48016     9.810529e-3
           464152     1.308071e-5
           464154     1.373474e-4
           464155     9.679722e-4
           464156     1.347313e-3
           464157     1.026835e-3
           464158     1.622008e-3
           464160     1.425792e-3
```

**Table 6-3-18 Listing of KENO Input for Cask With 14x14 OFA – 5.0 W/O Assembly (Full Density Water) (cont.)**

```
mix= 11
'  carbon steel sheet for gd absorber
            56012      4.728898e-4
           515031      5.807008e-5
           516032      6.642906e-5
           525055      3.877064e-4
           526000      8.420119e-2
end mixt

read geometry
unit 1
com=" 14x14 ofa fuel rod - enriched region"
cylinder    1  1     0.437388  167.64  0.0
cylinder    2  1     0.446278  167.64  0.0
cylinder    3  1     0.50800   167.64  0.0
cuboid      8  1  4p0.70612    167.64  0.0
unit 2
com=" 14x14 ofa guide tube - enriched region"
cylinder    8  1     0.62484   167.64  0.0
cylinder    3  1     0.66802   167.64  0.0
cuboid      8  1  4p0.70612    167.64  0.0
unit 3
com=" 14x14 ofa instrument tube - enriched region"
cylinder    8  1     0.44704   167.64  0.0
cylinder    3  1     0.50673   167.64  0.0
cuboid      8  1  4p0.70612    167.64  0.0
unit 4
com=" 14x14 ofa fuel rod - blanket region"
cylinder    4  1     0.218694   15.24  0.0
cylinder    5  1     0.437388   15.24  0.0
cylinder    6  1     0.446278   15.24  0.0
cylinder    7  1     0.50800    15.24  0.0
cuboid      8  1  4p0.70612     15.24  0.0
unit 5
com=" 14x14 ofa guide tube - blanket region"
cylinder    8  1     0.62484    15.24  0.0
cylinder    3  1     0.66802    15.24  0.0
cuboid      8  1  4p0.70612     15.24  0.0
unit 6
com=" 14x14 ofa instrument tube - blanket region"
cylinder    8  1     0.44704    15.24  0.0
cylinder    3  1     0.50673    15.24  0.0
cuboid      8  1  4p0.70612     15.24  0.0
unit 7      com='strong back, horizontal'
  cuboid    9 1 25.413 0.0  0.4572  0.0  204.01  0.0
unit 8      com='strong back, vertical'
  cuboid    9 1 0.4572 0.0  24.14   0.0  204.01  0.0
unit 9      com='verticle gad poison plat between assembly'
  cuboid   11 1 0.0889 0.0  18.415  0.0   204.01  0.0
  cuboid   10 1 .09906 -.01016 18.415 0.0 204.01  0.0
unit 10     com='rest of strongback and cradle'
  cuboid    8 1 7.1051 0.5149 12.1851 0.5149 204.01  0.0
  cuboid    9 1 7.62   0.0    12.70   0.0    204.01  0.0
unit 11     com='container flanges and bracket'
  cuboid    9 1 1.285  0.0    22.86   0.0    204.01  0.0
unit 12     com='skid angle'
  cuboid    8 1 7.62   0.9652 7.62    0.9652 204.01  0.0
  cuboid    9 1 7.62   0.0    7.62    0.0    204.01  0.0
```

**Table 6-3-18 Listing of KENO Input for Cask With 14x14 OFA – 5.0 W/O Assembly (Full Density Water) (cont.)**

```
unit 13      com='middle top clamping assembly'
  cuboid     9 1 33.02  0.0    5.08     0.0   2.5908  0.0
unit 14      com='middle side clamping assembly'
  cuboid     9 1  5.08  0.0    24.120    0.0   2.5908  0.0
unit 15      com='unistrut channel assembly'
  cuboid     8 1 1.799  0.0    3.556   0.7399 204.01  0.0
  cuboid     9 1 2.538  0.0    3.556   0.0    204.01  0.0
unit 16      com='top clamping assembly'
  cuboid     9 1 33.02  0.0    5.08     0.0   5.1816  0.0
unit 17      com='side clamping assembly'
  cuboid     9 1  5.08  0.0    24.120    0.0   5.1816  0.0
unit 18      com='horizontal gad poison plate below assembly, space 3, 4, 5'
  cuboid    11 1 22.225 0.0  0.0889   0.0   21.59  0.0
  cuboid    10 1 22.225 0.0  .09906 -.01016 21.59  0.0
unit 19      com='horizontal gad poison plate below assembly, space 2 and 6'
  cuboid    11 1 22.225 0.0  0.0889   0.0   53.34  0.0
  cuboid    10 1 22.225 0.0  .09906 -.01016 53.34  0.0
unit 20      com='horizontal gad poison plate below assembly, space 1 and 7'
  cuboid    11 1 22.225 0.0  0.0889   0.0   57.33  0.0
  cuboid    10 1 22.225 0.0  .09906 -.01016 57.33  0.0
global
unit 21
com=" 14x14 ofa assembly in cask, no horizontal gad plates "
array 1   0.0        0.0        0.0
cuboid      8  1    41.381   -3.1    29.94    -38.56    205.74   0.0

hole        7  -0.4572  -0.4572   0.0
hole        8  -0.4572   0        0.0
hole        9  -0.8979  -0.8128   0.0
hole       10  24.958   -18.237   0.0
hole       11  40.091   -12.7     0.0
hole       12  30.48    -38.55    0.0
hole       13  -3.089    24.85    0.0
hole       14  24.85     0.7213   0.0
hole       16  -3.089    24.85    63.93
hole       17  24.85     0.7213   63.93
hole       16  -3.089    24.85    130.5
hole       17  24.85     0.7213   130.5
hole       16  -3.089    24.85    177.7
hole       17  24.85     0.7213   177.7
hole       15  -2.997    20.87    0.0
cuboid      9  1    41.602   -3.1    30.16    -38.78    205.74   0.0
end geom.

read array
ara=1 nux=14 nuy=14 nuz=2 com=" 14x14 ofa assembly "
loop
 1   1  14   1      1  14   1      1   1   1
 2   3  12   3      3  12   9      1   1   1
 2   3  12   9      6   9   3      1   1   1
 2   5  10   5      5  10   5      1   1   1
 3   7   7   1      8   8   1      1   1   1
 4   1  14   1      1  14   1      2   2   1
 5   3  12   3      3  12   9      2   2   1
 5   3  12   9      6   9   3      2   2   1
 5   5  10   5      5  10   5      2   2   1
 6   7   7   1      8   8   1      2   2   1
```

**Table 6-3-18 Listing of KENO Input for Cask With 14x14 OFA – 5.0 W/O Assembly (Full Density Water) (cont.)**

```
end loop
end array

read bounds
all=specular
end bounds

read plot
  ttl='box slice through cask'
  pic=box
  nch='0ugiugiabcdefhjklmnop.'
  xul= -4.0      yul= 30.1      zul= 66.52
  xlr= 45.0      ylr= -40.0     zlr= 66.52
  uax=1.0    vdn=-1.0   nax=130 end
  ttl='box slice through cask'
  pic=mat
  nch='0u.z.u.z.sgs'
  xul= -4.0      yul= 30.1      zul= 66.52
  xlr= 45.0      ylr= -40.0     zlr= 66.52
  uax=1.0    vdn=-1.0   nax=130 end
  ttl='box slice through assembly'
  pic=box
  nch='0ugiugiabcdefhjklmnop.'
  xul= 0.0       yul= 20.0      zul= 66.52
  xlr= 20.0      ylr= 0.0     zlr= 66.52
  uax=1.0    vdn=-1.0   nax=130 end
  ttl='mat slice through annular pellet'
  pic=mat
  nch='0u.z.u.z.sgs'
  xul= 1.41      yul= 4.24    zul= 180.0
  xlr= 4.24      ylr= 1.41    zlr= 180.0
  uax=1.0    vdn=-1.0   nax=130 end
  ttl='mat slice through annular pellet'
  pic=mat
  nch='0u.z.u.z.sgs'
  xul= -1.0      yul= 18.0    zul= 180.0
  xlr= -0.5      ylr= 0.0     zlr= 180.0
  uax=1.0    vdn=-1.0   nax=130  ndn=100  end

end plot

end data
end
```

**Table 6-3-19 Listing of KENO Input for 17x17 OFA – 5.0 W/O Assembly (Full Density Water)**

```
title-cask with 17x17 ofa 5.00 w/o assembly

read parameters
  tme=60    run=yes   plt=yes
  gen=300   npg=310   nsk=005   lib=25
  xsl=yes   nub=yes
end parameters

read mixt  sct=2
mix= 1
' solid uo2 pellet 5.00 w/o (96.5% td, 0% dish)
          1192235     0.0011942
          1192238     0.022404
           118016     0.047196
mix= 2
' h2o at 1.00 g/cc in solid pellet gap
           231001     0.066854
           238016     0.033427
mix= 3
' solid zirc fuel rod cladding
         2140302     0.043326
mix= 4
' h2o at 1.00 g/cc in blanket fuel annulus
           151001     0.066854
           158016     0.033427
mix= 5
' annular uo2 pellet 5.00 w/o (96.5% td)
          2292235     0.0011942
          2292238     0.022404
           228016     0.047196
mix= 6
' h2o at 1.00 g/cc in annular pellet gap
           341001     0.066854
           348016     0.033427
mix= 7
' annular zirc fuel rod cladding
          3240302     0.043326
mix= 8
' h2o at 1.00 g/cc
            31001     0.066854
            38016     0.033427
mix= 9
'  carbon steel for strongback & shell
            36012     4.728898e-4
           315031     5.807008e-5
           316032     6.642906e-5
           325055     3.877064e-4
           326000     8.420119e-2
mix= 10
'  gadolinia oxide absorber (0.02 gm gd2o3/cm2 @ 0.01016 cm thickness)
            48016     9.810529e-3
           464152     1.308071e-5
           464154     1.373474e-4
           464155     9.679722e-4
           464156     1.347313e-3
           464157     1.026835e-3
           464158     1.622008e-3
           464160     1.425792e-3
```

**Table 6-3-19 Listing of KENO Input for 17x17 OFA – 5.0 W/O Assembly (Full Density Water) (cont.)**

```
mix= 11
'  carbon steel sheet for gd absorber
            56012      4.728898e-4
           515031      5.807008e-5
           516032      6.642906e-5
           525055      3.877064e-4
           526000      8.420119e-2
end mixt

read geometry
unit 1
com=" 17x17 ofa fuel rod - enriched region"
cylinder    1  1     0.392176  167.64  0.0
cylinder    2  1     0.40005   167.64  0.0
cylinder    3  1     0.45720   167.64  0.0
cuboid      8  1  4p0.62992    167.64  0.0
unit 2
com=" 17x17 ofa guide and instrument tube - enriched region"
cylinder    8  1     0.56134   167.64  0.0
cylinder    3  1     0.60198   167.64  0.0
cuboid      8  1  4p0.62992    167.64  0.0
unit 3
com=" 17x17 ofa fuel rod - blanket region"
cylinder    4  1     0.19685    15.24  0.0
cylinder    5  1     0.392176   15.24  0.0
cylinder    6  1     0.40005    15.24  0.0
cylinder    7  1     0.45720    15.24  0.0
cuboid      8  1  4p0.62992     15.24  0.0
unit 4
com=" 17x17 ofa guide and instrument tube - blanket region"
cylinder    8  1     0.56134    15.24  0.0
cylinder    3  1     0.60198    15.24  0.0
cuboid      8  1  4p0.62992     15.24  0.0
unit 7      com='strong back, horizontal'
  cuboid    9 1 25.413 0.0  0.4572  0.0  204.01  0.0
unit 8      com='strong back, vertical'
  cuboid    9 1 0.4572 0.0  24.14   0.0  204.01  0.0
unit 9      com='verticle gad poison plat between assembly'
  cuboid   11 1 0.0889 0.0  18.415  0.0   204.01  0.0
  cuboid   10 1 .09906 -.01016 18.415 0.0 204.01  0.0
unit 10     com='rest of strongback and cradle'
  cuboid    8 1 7.1051 0.5149 12.1851 0.5149 204.01  0.0
  cuboid    9 1 7.62   0.0    12.70   0.0    204.01  0.0
unit 11     com='container flanges and bracket'
  cuboid    9 1 1.285  0.0    22.86   0.0    204.01  0.0
unit 12     com='skid angle'
  cuboid    8 1 7.62   0.9652 7.62    0.9652 204.01  0.0
  cuboid    9 1 7.62   0.0    7.62    0.0    204.01  0.0
unit 13     com='middle top clamping assembly'
  cuboid    9 1 33.02  0.0    5.08     0.0   2.5908  0.0
unit 14     com='middle side clamping assembly'
  cuboid    9 1  5.08  0.0    24.120    0.0   2.5908  0.0
unit 15     com='unistrut channel assembly'
  cuboid    8 1 1.799  0.0    3.556   0.7399 204.01  0.0
  cuboid    9 1 2.538  0.0    3.556   0.0    204.01  0.0
unit 16     com='top clamping assembly'
  cuboid    9 1 33.02  0.0    5.08     0.0   5.1816  0.0
```

**Table 6-3-19 Listing of KENO Input for 17x17 OFA – 5.0 W/O Assembly (Full Density Water) (cont.)**

```
unit 17      com='side clamping assembly'
  cuboid     9 1  5.08  0.0    24.120    0.0   5.1816  0.0
unit 18      com='horizontal gad poison plate below assembly, space 3, 4, 5'
  cuboid    11 1 22.225 0.0  0.0889   0.0   21.59  0.0
  cuboid    10 1 22.225 0.0  .09906 -.01016 21.59  0.0
unit 19      com='horizontal gad poison plate below assembly, space 2 and 6'
  cuboid    11 1 22.225 0.0  0.0889   0.0   53.34  0.0
  cuboid    10 1 22.225 0.0  .09906 -.01016 53.34  0.0
unit 20      com='horizontal gad poison plate below assembly, space 1 and 7'
  cuboid    11 1 22.225 0.0  0.0889   0.0   57.33  0.0
  cuboid    10 1 22.225 0.0  .09906 -.01016 57.33  0.0
global
unit 21
com=" 17x17 ofa assembly in cask "
array 1   0.0       0.0       0.0
cuboid      8  1    43.026   -3.1    31.586    -38.56    205.74   0.0

hole        7  -0.4572  -0.4572   0.0
hole        8  -0.4572   0        0.0
hole        9  -0.8979  -0.8128   0.0
hole       10  24.958   -18.237   0.0
hole       11  41.74    -12.7     0.0
hole       12  30.48    -38.55    0.0
hole       13  -1.443    26.50    0.0
hole       14  26.50     2.367    0.0
hole       16  -1.443    26.50    63.93
hole       17  26.50     2.367    63.93
hole       16  -1.443    26.50    130.5
hole       17  26.50     2.367    130.5
hole       16  -1.443    26.50    177.7
hole       17  26.50     2.367    177.7
hole       15  -2.997    20.87    0.0
hole       18   0.0     -0.5563   0.0
hole       18   0.0     -0.5563   31.115
hole       18   0.0     -0.5563   52.705
hole       19   0.0     -0.5563   83.82
hole       20   0.0     -0.5563   146.68
cuboid      9  1    43.25    -3.1    31.81    -38.78    205.74   0.0
end geom.

read array
ara=1 nux=17 nuy=17 nuz=2 com=" 17x17 ofa assembly "
loop
 1   1  17   1     1  17   1     1   1   1
 2   3  15   3     6  12   3     1   1   1
 2   4  14  10     4  14  10    1   1   1
 2   6  12   3     3  15  12     1   1   1
 3   1  17   1     1  17   1     2   2   1
 4   3  15   3     6  12   3     2   2   1
 4   4  14  10     4  14  10    2   2   1
 4   6  12   3     3  15  12     2   2   1
end loop
end array

read bounds
all=specular
end bounds
```

**Table 6-3-19 Listing of KENO Input for 17x17 OFA – 5.0 W/O Assembly (Full Density Water) (cont.)**

```
read plot
  ttl='box slice through cask'
  pic=box
  nch='0ugiugiabcdefhjklmnop.'
  xul= -4.0      yul= 30.1      zul= 66.52
  xlr= 45.0      ylr= -40.0     zlr= 66.52
  uax=1.0    vdn=-1.0   nax=130 end
  ttl='box slice through cask'
  pic=mat
  nch='0u.z.u.z.sgs'
  xul= -4.0      yul= 30.1      zul= 66.52
  xlr= 45.0      ylr= -40.0     zlr= 66.52
  uax=1.0    vdn=-1.0   nax=130 end
  ttl='box slice through assembly'
  pic=box
  nch='0ugiugiabcdefhjklmnop.'
  xul= 0.0       yul= 20.0      zul= 66.52
  xlr= 20.0      ylr= 0.0     zlr= 66.52
  uax=1.0    vdn=-1.0   nax=130 end
  ttl='mat slice through annular pellet'
  pic=mat
  nch='0u.z.u.z.sgs'
  xul= 1.41      yul= 4.24    zul= 180.0
  xlr= 4.24      ylr= 1.41    zlr= 180.0
  uax=1.0    vdn=-1.0   nax=130 end
  ttl='mat slice through annular pellet'
  pic=mat
  nch='0u.z.u.z.sgs'
  xul= -1.0      yul= 18.0    zul= 180.0
  xlr= -0.5      ylr= 0.0     zlr= 180.0
  uax=1.0    vdn=-1.0   nax=130  ndn=100  end

end plot

end data
end
```

**Table 6-3-20 Listing of KENO Input for 14x14 OFA – 5.0 W/O Assembly (Partial Water Density)**

```
title-cask with 14x14 ofa 5.00 w/o assembly
read parameters
  tme=60    run=yes   plt=yes
  gen=300   npg=310   nsk=005   lib=29
  xsl=yes   nub=yes
end parameters
read mixt  sct=2
mix= 1
' solid uo2 pellet 5.00 w/o (96.5% td, 0% dish)
          1192235     0.0011942
          1192238     0.022404
           118016     0.047196
mix= 2
' h2o at 1.00 g/cc in solid pellet gap
           231001     0.066854
           238016     0.033427
mix= 3
' solid zirc fuel rod cladding
         2140302     0.043326
mix= 4
' h2o at 1.00 g/cc in blanket fuel annulus
           151001     0.066854
           158016     0.033427
mix= 5
' annular uo2 pellet 5.00 w/o (96.5% td)
          2292235     0.0011942
          2292238     0.022404
           228016     0.047196
mix= 6
' h2o at 1.00 g/cc in annular pellet gap
           341001     0.066854
           348016     0.033427
mix= 7
' annular zirc fuel rod cladding
          3240302     0.043326
mix= 8
' h2o at 1.00 g/cc
            31001     .0013371
            38016     .0006685
mix= 9
'  carbon steel for strongback & shell
            36012     4.728898e-4
           315031     5.807008e-5
           316032     6.642906e-5
           325055     3.877064e-4
           326000     8.420119e-2
mix= 10
'  gadolinia oxide absorber (0.02 gm gd2o3/cm2 @ 0.01016 cm thickness)
            48016     9.810529e-3
           464152     1.308071e-5
           464154     1.373474e-4
           464155     9.679722e-4
           464156     1.347313e-3
           464157     1.026835e-3
           464158     1.622008e-3
           464160     1.425792e-3
```

**Table 6-3-20 Listing of KENO Input for 14x14 OFA – 5.0 W/O Assembly (Partial Water Density) (cont.)**

```
mix= 11
'  carbon steel sheet for gd absorber
            56012      4.728898e-4
           515031      5.807008e-5
           516032      6.642906e-5
           525055      3.877064e-4
           526000      8.420119e-2
end mixt

read geometry
unit 1
com=" 14x14 ofa fuel rod - enriched region"
cylinder    1  1     0.437388  167.64  0.0
cylinder    2  1     0.446278  167.64  0.0
cylinder    3  1     0.50800   167.64  0.0
cuboid      8  1  4p0.70612    167.64  0.0
unit 2
com=" 14x14 ofa guide tube - enriched region"
cylinder    8  1     0.62484   167.64  0.0
cylinder    3  1     0.66802   167.64  0.0
cuboid      8  1  4p0.70612    167.64  0.0
unit 3
com=" 14x14 ofa instrument tube - enriched region"
cylinder    8  1     0.44704   167.64  0.0
cylinder    3  1     0.50673   167.64  0.0
cuboid      8  1  4p0.70612  167.64  0.0
unit 4
com=" 14x14 ofa fuel rod - blanket region"
cylinder    4  1     0.218694   15.24  0.0
cylinder    5  1     0.437388   15.24  0.0
cylinder    6  1     0.446278   15.24  0.0
cylinder    7  1     0.50800    15.24  0.0
cuboid      8  1  4p0.70612     15.24  0.0
unit 5
com=" 14x14 ofa guide tube - blanket region"
cylinder    8  1     0.62484    15.24  0.0
cylinder    3  1     0.66802    15.24  0.0
cuboid      8  1  4p0.70612     15.24  0.0
unit 6
com=" 14x14 ofa instrument tube - blanket region"
cylinder    8  1     0.44704    15.24  0.0
cylinder    3  1     0.50673    15.24  0.0
cuboid      8  1  4p0.70612     15.24  0.0
unit 7      com='strong back, horizontal'
  cuboid    9 1 25.413 0.0  0.4572  0.0  204.01  0.0
unit 8      com='strong back, vertical'
  cuboid    9 1 0.4572 0.0  24.14   0.0  204.01  0.0
unit 9      com='verticle gad poison plat between assembly'
  cuboid   11 1 0.0889 0.0  18.415  0.0   204.01  0.0
  cuboid   10 1 .09906 -.01016 18.415 0.0 204.01  0.0
unit 10     com='rest of strongback and cradle'
  cuboid    8 1 7.1051 0.5149 12.1851 0.5149 204.01  0.0
  cuboid    9 1 7.62   0.0    12.70   0.0    204.01  0.0
unit 11     com='container flanges and bracket'
  cuboid    9 1 1.285  0.0    22.86   0.0    204.01  0.0
```

**Table 6-3-20 Listing of KENO Input for 14x14 OFA – 5.0 W/O Assembly (Partial Water Density) (cont.)**

```
unit 12      com='skid angle'
  cuboid     8 1 7.62    0.9652 7.62     0.9652 204.01  0.0
  cuboid     9 1 7.62    0.0    7.62     0.0    204.01  0.0
unit 13      com='middle top clamping assembly'
  cuboid     9 1 33.02  0.0    5.08      0.0   2.5908  0.0
unit 14      com='middle side clamping assembly'
  cuboid     9 1  5.08  0.0    24.120    0.0   2.5908  0.0
unit 15      com='unistrut channel assembly'
  cuboid     8 1 1.799  0.0    3.556   0.7399 204.01  0.0
  cuboid     9 1 2.538  0.0    3.556   0.0    204.01  0.0
unit 16      com='top clamping assembly'
  cuboid     9 1 33.02  0.0    5.08      0.0   5.1816  0.0
unit 17      com='side clamping assembly'
  cuboid     9 1  5.08  0.0    24.120    0.0   5.1816  0.0
unit 18      com='horizontal gad poison plate below assembly, space 3, 4, 5'
  cuboid    11 1 22.225 0.0  0.0889   0.0   21.59  0.0
  cuboid    10 1 22.225 0.0  .09906 -.01016 21.59  0.0
unit 19      com='horizontal gad poison plate below assembly, space 2 and 6'
  cuboid    11 1 22.225 0.0  0.0889   0.0   53.34  0.0
  cuboid    10 1 22.225 0.0  .09906 -.01016 53.34  0.0
unit 20      com='horizontal gad poison plate below assembly, space 1 and 7'
  cuboid    11 1 22.225 0.0  0.0889   0.0   57.33  0.0
  cuboid    10 1 22.225 0.0  .09906 -.01016 57.33  0.0
global
unit 21
com=" 14x14 ofa assembly in cask, no horizontal gad plates "
array 1   0.0       0.0       0.0
cuboid      8  1    41.381   -3.1    29.94    -38.56    205.74   0.0

hole        7  -0.4572  -0.4572   0.0
hole        8  -0.4572   0        0.0
hole        9  -0.8979  -0.8128   0.0
hole       10  24.958   -18.237   0.0
hole       11  40.091   -12.7     0.0
hole       12  30.48    -38.55    0.0
hole       13  -3.089    24.85    0.0
hole       14  24.85     0.7213   0.0
hole       16  -3.089    24.85    63.93
hole       17  24.85     0.7213   63.93
hole       16  -3.089    24.85    130.5
hole       17  24.85     0.7213   130.5
hole       16  -3.089    24.85    177.7
hole       17  24.85     0.7213   177.7
hole       15  -2.997    20.87    0.0
cuboid      9  1    41.602   -3.1    30.16    -38.78    205.74   0.0
end geom.

read array
ara=1 nux=14 nuy=14 nuz=2 com=" 14x14 ofa assembly "
loop
 1   1  14   1     1  14   1     1   1   1
 2   3  12   3     3  12   9     1   1   1
 2   3  12   9     6   9   3     1   1   1
 2   5  10   5     5  10   5     1   1   1
 3   7   7   1     8   8   1     1   1   1
 4   1  14   1     1  14   1     2   2   1
 5   3  12   3     3  12   9     2   2   1
```

**Table 6-3-20 Listing of KENO Input for 14x14 OFA – 5.0 W/O Assembly (Partial Water Density) (cont.)**

```
 5   3  12   9     6   9   3     2   2   1
 5   5  10   5     5  10   5     2   2   1
 6   7   7   1     8   8   1     2   2   1
end loop
end array

read bounds
all=specular
end bounds

read plot
  ttl='box slice through cask'
  pic=box
  nch='0ugiugiabcdefhjklmnop.'
  xul= -4.0     yul= 30.1     zul= 66.52
  xlr= 45.0     ylr= -40.0    zlr= 66.52
  uax=1.0    vdn=-1.0   nax=130 end
  ttl='box slice through cask'
  pic=mat
  nch='0u.z.u.z.sgs'
  xul= -4.0     yul= 30.1     zul= 66.52
  xlr= 45.0     ylr= -40.0    zlr= 66.52
  uax=1.0    vdn=-1.0   nax=130 end
  ttl='box slice through assembly'
  pic=box
  nch='0ugiugiabcdefhjklmnop.'
  xul= 0.0      yul= 20.0     zul= 66.52
  xlr= 20.0     ylr= 0.0    zlr= 66.52
  uax=1.0    vdn=-1.0   nax=130 end
  ttl='mat slice through annular pellet'
  pic=mat
  nch='0u.z.u.z.sgs'
  xul= 1.41     yul= 4.24   zul= 180.0
  xlr= 4.24     ylr= 1.41   zlr= 180.0
  uax=1.0    vdn=-1.0   nax=130 end
  ttl='mat slice through annular pellet'
  pic=mat
  nch='0u.z.u.z.sgs'
  xul= -1.0     yul= 18.0   zul= 180.0
  xlr= -0.5     ylr= 0.0    zlr= 180.0
  uax=1.0    vdn=-1.0   nax=130  ndn=100  end

end plot

end data
end
```

**Table 6-3-21 Listing of KENO Input for 17x17 OFA – 5.0 W/O Assembly (Partial Water Density)**

```
title-cask with 17x17 ofa 5.00 w/o assembly

read parameters
  tme=60    run=yes   plt=yes
  gen=300   npg=310   nsk=005   lib=29
  xsl=yes   nub=yes
end parameters

read mixt  sct=2
mix= 1
' solid uo2 pellet 5.00 w/o (96.5% td, 0% dish)
          1192235     0.0011942
          1192238     0.022404
           118016     0.047196
mix= 2
' h2o at 1.00 g/cc in solid pellet gap
           231001     0.066854
           238016     0.033427
mix= 3
' solid zirc fuel rod cladding
         2140302     0.043326
mix= 4
' h2o at 1.00 g/cc in blanket fuel annulus
           151001     0.066854
           158016     0.033427
mix= 5
' annular uo2 pellet 5.00 w/o (96.5% td)
          2292235     0.0011942
          2292238     0.022404
           228016     0.047196
mix= 6
' h2o at 1.00 g/cc in annular pellet gap
           341001     0.066854
           348016     0.033427
mix= 7
' annular zirc fuel rod cladding
          3240302     0.043326
mix= 8
' h2o at 1.00 g/cc
            31001     .0013371
            38016     .0006685
mix= 9
'  carbon steel for strongback & shell
            36012     4.728898e-4
           315031     5.807008e-5
           316032     6.642906e-5
           325055     3.877064e-4
           326000     8.420119e-2
mix= 10
'  gadolinia oxide absorber (0.02 gm gd2o3/cm2 @ 0.01016 cm thickness)
            48016     9.810529e-3
           464152     1.308071e-5
           464154     1.373474e-4
           464155     9.679722e-4
           464156     1.347313e-3
           464157     1.026835e-3
           464158     1.622008e-3
           464160     1.425792e-3
```

**Table 6-3-21 Listing of KENO Input for 17x17 OFA – 5.0 W/O Assembly (Partial Water Density) (cont.)**

```
mix= 11
'  carbon steel sheet for gd absorber
            56012      4.728898e-4
           515031      5.807008e-5
           516032      6.642906e-5
           525055      3.877064e-4
           526000      8.420119e-2
end mixt

read geometry
unit 1
com=" 17x17 ofa fuel rod - enriched region"
cylinder    1  1     0.392176  167.64  0.0
cylinder    2  1     0.40005   167.64  0.0
cylinder    3  1     0.45720   167.64  0.0
cuboid      8  1  4p0.62992    167.64  0.0
unit 2
com=" 17x17 ofa guide and instrument tube - enriched region"
cylinder    8  1     0.56134   167.64  0.0
cylinder    3  1     0.60198   167.64  0.0
cuboid      8  1  4p0.62992    167.64  0.0
unit 3
com=" 17x17 ofa fuel rod - blanket region"
cylinder    4  1     0.19685    15.24  0.0
cylinder    5  1     0.392176   15.24  0.0
cylinder    6  1     0.40005    15.24  0.0
cylinder    7  1     0.45720    15.24  0.0
cuboid      8  1  4p0.62992    15.24  0.0
unit 4
com=" 17x17 ofa guide and instrument tube - blanket region"
cylinder    8  1     0.56134    15.24  0.0
cylinder    3  1     0.60198    15.24  0.0
cuboid      8  1  4p0.62992    15.24  0.0
unit 7      com='strong back, horizontal'
  cuboid    9 1 25.413 0.0  0.4572  0.0  204.01  0.0
unit 8      com='strong back, vertical'
  cuboid    9 1 0.4572 0.0  24.14   0.0  204.01  0.0
unit 9      com='verticle gad poison plat between assembly'
  cuboid   11 1 0.0889 0.0  18.415  0.0   204.01  0.0
  cuboid   10 1 .09906 -.01016 18.415 0.0 204.01  0.0
unit 10     com='rest of strongback and cradle'
  cuboid    8 1 7.1051 0.5149 12.1851 0.5149 204.01  0.0
  cuboid    9 1 7.62   0.0    12.70   0.0    204.01  0.0
unit 11     com='container flanges and bracket'
  cuboid    9 1 1.285  0.0    22.86   0.0    204.01  0.0
unit 12     com='skid angle'
  cuboid    8 1 7.62   0.9652 7.62    0.9652 204.01  0.0
  cuboid    9 1 7.62   0.0    7.62    0.0    204.01  0.0
unit 13     com='middle top clamping assembly'
  cuboid    9 1 33.02  0.0    5.08     0.0   2.5908  0.0
unit 14     com='middle side clamping assembly'
  cuboid    9 1  5.08  0.0    24.120    0.0   2.5908  0.0
unit 15     com='unistrut channel assembly'
  cuboid    8 1 1.799  0.0    3.556   0.7399 204.01  0.0
  cuboid    9 1 2.538  0.0    3.556   0.0    204.01  0.0
unit 16     com='top clamping assembly'
  cuboid    9 1 33.02  0.0    5.08     0.0   5.1816  0.0
```

**Table 6-3-21 Listing of KENO Input for 17x17 OFA – 5.0 W/O Assembly (Partial Water Density) (cont.)**

```
unit 17      com='side clamping assembly'
  cuboid     9 1  5.08  0.0    24.120    0.0   5.1816  0.0
unit 18      com='horizontal gad poison plate below assembly, space 3, 4, 5'
  cuboid    11 1 22.225 0.0  0.0889   0.0   21.59  0.0
  cuboid    10 1 22.225 0.0  .09906 -.01016 21.59  0.0
unit 19      com='horizontal gad poison plate below assembly, space 2 and 6'
  cuboid    11 1 22.225 0.0  0.0889   0.0   53.34  0.0
  cuboid    10 1 22.225 0.0  .09906 -.01016 53.34  0.0
unit 20      com='horizontal gad poison plate below assembly, space 1 and 7'
  cuboid    11 1 22.225 0.0  0.0889   0.0   57.33  0.0
  cuboid    10 1 22.225 0.0  .09906 -.01016 57.33  0.0
global
unit 21
com=" 17x17 ofa assembly in cask "
array 1   0.0       0.0       0.0
cuboid      8  1    43.026   -3.1    31.586    -38.56    205.74   0.0
hole        7  -0.4572  -0.4572   0.0
hole        8  -0.4572   0        0.0
hole        9  -0.8979  -0.8128   0.0
hole       10  24.958   -18.237   0.0
hole       11  41.74    -12.7     0.0
hole       12  30.48    -38.55    0.0
hole       13  -1.443    26.50    0.0
hole       14  26.50     2.367    0.0
hole       16  -1.443    26.50    63.93
hole       17  26.50     2.367    63.93
hole       16  -1.443    26.50    130.5
hole       17  26.50     2.367    130.5
hole       16  -1.443    26.50    177.7
hole       17  26.50     2.367    177.7
hole       15  -2.997    20.87    0.0
cuboid      9  1    43.25    -3.1    31.81    -38.78    205.74   0.0
end geom.

read array
ara=1 nux=17 nuy=17 nuz=2 com=" 17x17 ofa assembly "
loop
 1   1  17   1     1  17   1     1   1   1
 2   3  15   3     6  12   3     1   1   1
 2   4  14  10     4  14  10     1   1   1
 2   6  12   3     3  15  12     1   1   1
 3   1  17   1     1  17   1     2   2   1
 4   3  15   3     6  12   3     2   2   1
 4   4  14  10     4  14  10     2   2   1
 4   6  12   3     3  15  12     2   2   1
end loop
end array

read bounds
all=specular
end bounds

read plot
  ttl='box slice through cask'
  pic=box
  nch='0ugiugiabcdefhjklmnop.'
  xul= -4.0     yul= 30.1     zul= 66.52
  xlr= 45.0     ylr= -40.0    zlr= 66.52
```

**Table 6-3-21** ***Listing of KENO Input for 17x17 OFA – 5.0 W/O Assembly (Partial Water Density)*** **(cont.)**

```
  uax=1.0    vdn=-1.0   nax=130 end
  ttl='box slice through cask'
  pic=mat
  nch='0u.z.u.z.sgs'
  xul= -4.0     yul= 30.1     zul= 66.52
  xlr= 45.0     ylr= -40.0    zlr= 66.52
  uax=1.0    vdn=-1.0   nax=130 end
  ttl='box slice through assembly'
  pic=box
  nch='0ugiugiabcdefhjklmnop.'
  xul= 0.0      yul= 20.0     zul= 66.52
  xlr= 20.0     ylr= 0.0    zlr= 66.52
  uax=1.0    vdn=-1.0   nax=130 end
  ttl='mat slice through annular pellet'
  pic=mat
  nch='0u.z.u.z.sgs'
  xul= 1.41     yul= 4.24   zul= 180.0
  xlr= 4.24     ylr= 1.41   zlr= 180.0
  uax=1.0    vdn=-1.0   nax=130 end
  ttl='mat slice through annular pellet'

  pic=mat
  nch='0u.z.u.z.sgs'
  xul= -1.0     yul= 18.0   zul= 180.0
  xlr= -0.5     ylr= 0.0    zlr= 180.0
  uax=1.0    vdn=-1.0   nax=130  ndn=100  end

end plot

end data
end
```

**Table 6-3-22 Listing of KENO Input for 17x17 STD – 5.0 W/O Assembly (Partial Water Density)**

```
title-cask with 17x17 std 5.00 w/o assembly

read parameters
  tme=60    run=yes   plt=yes
  gen=300   npg=310   nsk=005   lib=29
  xsl=yes   nub=yes
end parameters

read mixt  sct=2
mix= 1
' solid uo2 pellet 5.00 w/o (96.5% td, 0% dish)
          1192235     0.0011942
          1192238     0.022404
           118016     0.047196
mix= 2
' h2o at 1.00 g/cc in solid pellet gap
           231001     0.066854
           238016     0.033427
mix= 3
' solid zirc fuel rod cladding
         2140302     0.043326
mix= 4
' h2o at 1.00 g/cc in blanket fuel annulus
           151001     0.066854
           158016     0.033427
mix= 5
' annular uo2 pellet 5.00 w/o (96.5% td)
          2292235     0.0011942
          2292238     0.022404
           228016     0.047196
mix= 6
' h2o at 1.00 g/cc in annular pellet gap
           341001     0.066854
           348016     0.033427
mix= 7
' annular zirc fuel rod cladding
          3240302     0.043326
mix= 8
' h2o at 1.00 g/cc
            31001     .0013371
            38016     .0006685
mix= 9
'  carbon steel for strongback & shell
            36012     4.728898e-4
           315031     5.807008e-5
           316032     6.642906e-5
           325055     3.877064e-4
           326000     8.420119e-2
mix= 10
'  gadolinia oxide absorber (0.02 gm gd2o3/cm2 @ 0.01016 cm thickness)
            48016     9.810529e-3
           464152     1.308071e-5
           464154     1.373474e-4
           464155     9.679722e-4
           464156     1.347313e-3
           464157     1.026835e-3
           464158     1.622008e-3
           464160     1.425792e-3
```

**Table 6-3-22 Listing of KENO Input for 17x17 STD – 5.0 W/O Assembly (Partial Water Density) (cont.)**

```
mix= 11
'  carbon steel sheet for gd absorber
            56012      4.728898e-4
           515031      5.807008e-5
           516032      6.642906e-5
           525055      3.877064e-4
           526000      8.420119e-2
end mixt

read geometry
unit 1
com=" 17x17 std fuel rod - enriched region"
cylinder    1  1     0.409575  167.64  0.0
cylinder    2  1     0.41783   167.64  0.0
cylinder    3  1     0.47498   167.64  0.0
cuboid      8  1  4p0.62992    167.64  0.0
unit 2
com=" 17x17 std guide and instrument tube - enriched region"
cylinder    8  1     0.57150   167.64  0.0
cylinder    3  1     0.61214   167.64  0.0
cuboid      8  1  4p0.62992    167.64  0.0
unit 3
com=" 17x17 std fuel rod - blanket region"
cylinder    4  1     0.19685    15.24  0.0
cylinder    5  1     0.409575   15.24  0.0
cylinder    6  1     0.41783    15.24  0.0
cylinder    7  1     0.47498    15.24  0.0
cuboid      8  1  4p0.62992    15.24  0.0
unit 4
com=" 17x17 std guide and instrument tube - blanket region"
cylinder    8  1     0.57150    15.24  0.0
cylinder    3  1     0.61214    15.24  0.0
cuboid      8  1  4p0.62992    15.24  0.0
unit 7      com='strong back, horizontal'
  cuboid    9 1 25.413 0.0  0.4572  0.0  204.01  0.0
unit 8      com='strong back, vertical'
  cuboid    9 1 0.4572 0.0  24.14   0.0  204.01  0.0
unit 9      com='verticle gad poison plat between assembly'
  cuboid   11 1 0.0889 0.0  18.415  0.0   204.01  0.0
  cuboid   10 1 .09906 -.01016 18.415 0.0 204.01  0.0
unit 10     com='rest of strongback and cradle'
  cuboid    8 1 7.1051 0.5149 12.1851 0.5149 204.01  0.0
  cuboid    9 1 7.62   0.0    12.70   0.0    204.01  0.0
unit 11     com='container flanges and bracket'
  cuboid    9 1 1.285  0.0    22.86   0.0    204.01  0.0
unit 12     com='skid angle'
  cuboid    8 1 7.62   0.9652 7.62    0.9652 204.01  0.0
  cuboid    9 1 7.62   0.0    7.62    0.0    204.01  0.0
unit 13     com='middle top clamping assembly'
  cuboid    9 1 33.02  0.0    5.08     0.0   2.5908  0.0
unit 14     com='middle side clamping assembly'
  cuboid    9 1  5.08  0.0    24.120    0.0   2.5908  0.0
unit 15     com='unistrut channel assembly'
  cuboid    8 1 1.799  0.0    3.556   0.7399 204.01  0.0
  cuboid    9 1 2.538  0.0    3.556   0.0    204.01  0.0
unit 16     com='top clamping assembly'
  cuboid    9 1 33.02  0.0    5.08     0.0   5.1816  0.0
```

**Table 6-3-22 Listing of KENO Input for 17x17 STD – 5.0 W/O Assembly (Partial Water Density) (cont.)**

```
unit 17      com='side clamping assembly'
  cuboid     9 1  5.08  0.0    24.120    0.0   5.1816  0.0
unit 18      com='horizontal gad poison plate below assembly, space 3, 4, 5'
  cuboid    11 1 22.225 0.0  0.0889   0.0   21.59  0.0
  cuboid    10 1 22.225 0.0  .09906 -.01016 21.59  0.0
unit 19      com='horizontal gad poison plate below assembly, space 2 and 6'
  cuboid    11 1 22.225 0.0  0.0889   0.0   53.34  0.0
  cuboid    10 1 22.225 0.0  .09906 -.01016 53.34  0.0
unit 20      com='horizontal gad poison plate below assembly, space 1 and 7'
  cuboid    11 1 22.225 0.0  0.0889   0.0   57.33  0.0
  cuboid    10 1 22.225 0.0  .09906 -.01016 57.33  0.0
global
unit 21
com=" 17x17 std assembly in cask "
array 1   0.0        0.0        0.0
cuboid      8  1    43.026   -3.1    31.586    -38.56    205.74   0.0

hole        7  -0.4572  -0.4572   0.0
hole        8  -0.4572   0        0.0
hole        9  -0.8979  -0.8128   0.0
hole       10  24.958   -18.237   0.0
hole       11  41.74    -12.7     0.0
hole       12  30.48    -38.55    0.0
hole       13  -1.443    26.50    0.0
hole       14  26.50     2.367    0.0
hole       16  -1.443    26.50    63.93
hole       17  26.50     2.367    63.93
hole       16  -1.443    26.50    130.5
hole       17  26.50     2.367    130.5
hole       16  -1.443    26.50    177.7
hole       17  26.50     2.367    177.7
hole       15  -2.997    20.87    0.0
cuboid      9  1    43.25    -3.1    31.81    -38.78    205.74   0.0
end geom.

read array
ara=1 nux=17 nuy=17 nuz=2 com=" 17x17 std assembly "
loop
 1   1  17   1      1  17   1      1   1   1
 2   3  15   3      6  12   3      1   1   1
 2   4  14  10      4  14  10     1   1   1
 2   6  12   3      3  15  12      1   1   1
 3   1  17   1      1  17   1      2   2   1
 4   3  15   3      6  12   3      2   2   1
 4   4  14  10     4  14  10     2   2   1
 4   6  12   3      3  15  12      2   2   1
end loop
end array

read bounds
all=specular
end bounds

read plot
  ttl='box slice through cask'
  pic=box
```

**Table 6-3-22 Listing of KENO Input for 17x17 STD – 5.0 W/O Assembly (Partial Water Density) (cont.)**

```
  nch='0ugiugiabcdefhjklmnop.'
  xul= -4.0      yul= 30.1      zul= 66.52
  xlr= 45.0      ylr= -40.0     zlr= 66.52
  uax=1.0    vdn=-1.0   nax=130 end
  ttl='box slice through cask'
  pic=mat
  nch='0u.z.u.z.sgs'
  xul= -4.0      yul= 30.1      zul= 66.52
  xlr= 45.0      ylr= -40.0     zlr= 66.52
  uax=1.0    vdn=-1.0   nax=130 end
  ttl='box slice through assembly'
  pic=box
  nch='0ugiugiabcdefhjklmnop.'
  xul= 0.0       yul= 20.0      zul= 66.52
  xlr= 20.0      ylr= 0.0     zlr= 66.52
  uax=1.0    vdn=-1.0   nax=130 end
  ttl='mat slice through annular pellet'
  pic=mat
  nch='0u.z.u.z.sgs'
  xul= 1.41      yul= 4.24    zul= 180.0
  xlr= 4.24      ylr= 1.41    zlr= 180.0
  uax=1.0    vdn=-1.0   nax=130 end
  ttl='mat slice through annular pellet'

  pic=mat
  nch='0u.z.u.z.sgs'
  xul= -1.0      yul= 18.0    zul= 180.0
  xlr= -0.5      ylr= 0.0     zlr= 180.0
  uax=1.0    vdn=-1.0   nax=130  ndn=100  end

end plot

end data
end
```

**Table 6-3-23 KENO Input Deck for 17OFA – 4.65 WT% Enrichment – 8.5-Inch Annular Pellet Zone – MCC Container with No Horizontal Gadolinia Plates**

```
#job -jn mcc17ofa4.65_8.5inann
#
# mcc 17ofa with 8.5-in annular no horizontal gad plates 4.65wt%
#
ln -s /opt/wec/etc/227binlib  ftn51
ln -s /opt/wec/etc/albedos    ftn79
ln -s /opt/wec/etc/weights    ftn80
#
/EOF
title-cask with 17ofa assembly

read parameters
  tme=180   run=yes   plt=no
  gen=400   npg=1500  nsk=050   lib=29
  xsl=yes   nub=yes
end parameters

read start
  NST=1 XSM=0.00 XSP=21.4173
  YSM=0.00 YSP=21.4173 ZSM=0.00 ZSP=182.88
end start

read mixt  sct=2
mix= 1
' solid uo2 pellet 4.65 w/o (96.5% td, 0% dish)
          1192235     0.0011107
          1192238     0.022487
           118016     0.047195
mix= 2
' h2o at 1.00 g/cc in solid pellet gap
           231001     0.066854
           238016     0.033427
mix= 3
' solid zirc fuel rod cladding
         2140302     0.043326
mix= 4
' h2o at 1.00 g/cc in blanket fuel annulus
           151001     0.066854
           158016     0.033427
mix= 5
' annular uo2 pellet 4.65 w/o (96.5% td)
          2292235     0.0011107
          2292238     0.022487
           228016     0.047195
mix= 6
' h2o at 1.00 g/cc in annular pellet gap
           341001     0.066854
           348016     0.033427
mix= 7
' annular zirc fuel rod cladding
          3240302     0.043326
mix= 8
' h2o at 1.00 g/cc
            31001     0.066854
            38016     0.033427
```

**Table 6-3-23 (cont.) KENO Input Deck for 17OFA – 4.65 WT% Enrichment – 8.5-Inch Annular Pellet Zone – MCC Container with No Horizontal Gadolinia Plates**

```
mix= 9
'  carbon steel for strongback & shell
           36012      4.728898e-4
          315031      5.807008e-5
          316032      6.642906e-5
          325055      3.877064e-4
          326000      8.420119e-2
mix= 10
'  gadolinia oxide absorber (0.02 gm gd2o3/cm2 @ 0.01016 cm thickness)
           48016      9.810529e-3
          464152      1.308071e-5
          464154      1.373474e-4
          464155      9.679722e-4
          464156      1.347313e-3
          464157      1.026835e-3
          464158      1.622008e-3
          464160      1.425792e-3
mix= 11
'  carbon steel sheet for gd absorber
           56012      4.728898e-4
          515031      5.807008e-5
          516032      6.642906e-5
          525055      3.877064e-4
          526000      8.420119e-2
end mixt

read geometry
unit 1
com=" 17ofa fuel rod - enriched region"
cylinder    1  1    0.392176  161.29  0.0
cylinder    2  1    0.40005   161.29  0.0
cylinder    3  1    0.45720   161.29  0.0
cuboid      8  1  4p0.62992   161.29  0.0
unit 2
com=" 17ofa guide and instrument tube - enriched region"
cylinder    8  1    0.56134   161.29  0.0
cylinder    3  1    0.60198   161.29  0.0
cuboid      8  1  4p0.62992   161.29  0.0
unit 3
com=" 17ofa fuel rod - blanket region"
cylinder    4  1    0.19685    21.59  0.0
cylinder    5  1    0.392176   21.59  0.0
cylinder    6  1    0.40005    21.59  0.0
cylinder    7  1    0.45720    21.59  0.0
cuboid      8  1  4p0.62992    21.59  0.0
unit 4
com=" 17ofa guide and instrument tube - blanket region"
cylinder    8  1    0.56134    21.59  0.0
cylinder    3  1    0.60198    21.59  0.0
cuboid      8  1  4p0.62992    21.59  0.0
unit 7      com='strong back, horizontal'
  cuboid    9 1 25.413 0.0  0.4572  0.0  204.01  0.0
unit 8      com='strong back, vertical'
  cuboid    9 1 0.4572 0.0  24.14   0.0  204.01  0.0
unit 9      com='verticle gad poison plat between assembly'
  cuboid   11 1 0.0889 0.0  18.415  0.0   204.01  0.0
  cuboid   10 1 .09906 -.01016 18.415 0.0 204.01  0.0
```

**Table 6-3-23 (cont.) KENO Input Deck for 17OFA – 4.65 WT% Enrichment – 8.5-Inch Annular Pellet Zone – MCC Container with No Horizontal Gadolinia Plates**

```
unit 10      com='rest of strongback and cradle'
  cuboid     8 1 7.1051 0.5149 12.1851 0.5149 204.01  0.0
  cuboid     9 1 7.62   0.0    12.70   0.0    204.01  0.0
unit 11      com='container flanges and bracket'
  cuboid     9 1 1.285  0.0    22.86   0.0    204.01  0.0
unit 12      com='skid angle'
  cuboid     8 1 7.62   0.9652 7.62    0.9652 204.01  0.0
  cuboid     9 1 7.62   0.0    7.62    0.0    204.01  0.0
unit 13      com='middle top clamping assembly'
  cuboid     9 1 33.02  0.0    5.08     0.0   2.5908  0.0
unit 14      com='middle side clamping assembly'
  cuboid     9 1  5.08  0.0    24.120    0.0   2.5908  0.0
unit 15      com='unistrut channel assembly'
  cuboid     8 1 1.799  0.0    3.556   0.7399 204.01  0.0
  cuboid     9 1 2.538  0.0    3.556   0.0    204.01  0.0
unit 16      com='top clamping assembly'
  cuboid     9 1 33.02  0.0    5.08     0.0   5.1816  0.0
unit 17      com='side clamping assembly'
  cuboid     9 1  5.08  0.0    24.120    0.0   5.1816  0.0
unit 18      com='horizontal gad poison plate below assembly, space 3, 4, 5'
  cuboid    11 1 22.225 0.0  0.0889   0.0   21.59  0.0
  cuboid    10 1 22.225 0.0  .09906 -.01016 21.59  0.0
unit 19      com='horizontal gad poison plate below assembly, space 2 and 6'
  cuboid    11 1 22.225 0.0  0.0889   0.0   53.34  0.0
  cuboid    10 1 22.225 0.0  .09906 -.01016 53.34  0.0
unit 20      com='horizontal gad poison plate below assembly, space 1 and 7'
  cuboid    11 1 22.225 0.0  0.0889   0.0   57.33  0.0
  cuboid    10 1 22.225 0.0  .09906 -.01016 57.33  0.0
global
unit 21
com=" 17ofa assembly in cask, no horizontal gad plates "
array 1   0.0       0.0       0.0
cuboid      8  1    43.026   -3.1    31.586    -38.56    205.74   0.0

hole        7  -0.4572  -0.4572   0.0
hole        8  -0.4572   0        0.0
hole        9  -0.8979   0.8128   0.0
hole       10  24.958   -18.237   0.0
hole       11  41.74    -12.7     0.0
hole       12  30.48    -38.55    0.0
hole       13  -1.443    26.50    0.0
hole       14  26.50     2.367    0.0
hole       16  -1.443    26.50    63.93
hole       17  26.50     2.367    63.93
hole       16  -1.443    26.50    130.5
hole       17  26.50     2.367    130.5
hole       16  -1.443    26.50    177.7
hole       17  26.50     2.367    177.7
hole       15  -2.997    20.87    0.0
cuboid      9  1    43.25    -3.1    31.81    -38.78    205.74   0.0
end geom.

read array
ara=1 nux=17 nuy=17 nuz=2 com=" 17ofa assembly "
loop
 1   1  17   1     1  17   1     1   1   1
 2   3  15   3     6  12   3     1   1   1
 2   4  14  10     4  14  10     1   1   1
```

**Table 6-3-23 (cont.)** **KENO Input Deck for 17OFA – 4.65 WT% Enrichment – 8.5-Inch Annular Pellet Zone – MCC Container with No Horizontal Gadolinia Plates**

```
 2   6  12   3     3  15  12     1   1   1
 3   1  17   1     1  17   1     2   2   1
 4   3  15   3     6  12   3     2   2   1
 4   4  14  10     4  14  10     2   2   1
 4   6  12   3     3  15  12     2   2   1
end loop
end array

read bounds
all=specular
end bounds

read plot
  ttl='box slice through cask'
  pic=box
  nch='0ugiugiabcdefhjklmnop.'
  xul= -4.0     yul= 30.1     zul= 66.52
  xlr= 45.0     ylr= -40.0    zlr= 66.52
  uax=1.0    vdn=-1.0   nax=130 end
  ttl='box slice through cask'
  pic=mat
  nch='0u.z.u.z.sgs'
  xul= -4.0     yul= 30.1     zul= 66.52
  xlr= 45.0     ylr= -40.0    zlr= 66.52
  uax=1.0    vdn=-1.0   nax=130 end
  ttl='box slice through assembly'
  pic=box
  nch='0ugiugiabcdefhjklmnop.'
  xul= 0.0      yul= 20.0     zul= 66.52
  xlr= 20.0     ylr= 0.0    zlr= 66.52
  uax=1.0    vdn=-1.0   nax=130 end
  ttl='mat slice through annular pellet'
  pic=mat
  nch='0u.z.u.z.sgs'
  xul= 1.41     yul= 4.24   zul= 180.0
  xlr= 4.24     ylr= 1.41   zlr= 180.0
  uax=1.0    vdn=-1.0   nax=130 end
  ttl='mat slice through annular pellet'
  pic=mat
  nch='0u.z.u.z.sgs'
  xul= -1.0     yul= 18.0   zul= 180.0
  xlr= -0.5     ylr= 0.0    zlr= 180.0
  uax=1.0    vdn=-1.0   nax=130  ndn=100  end
end plot
end data
end
```

**Table 6-3-24 KENO Input Deck for 17OFA – 5.00 WT% Enrichment – 8.5-Inch Annular Pellet Zone – MCC Container with Horizontal Gadolinia Plates**

```
#job -jn mcc17ofa5.0_8.5inann
#
# mcc 17ofa with 8.5-in annular with horizontal gad plates 5.0wt%
#
ln -s /opt/wec/etc/227binlib  ftn51
ln -s /opt/wec/etc/albedos    ftn79
ln -s /opt/wec/etc/weights    ftn80
#
/EOF
title-cask with 17ofa 5.00 w/o assembly
read parameters
  tme=180   run=yes   plt=no
  gen=400   npg=1500  nsk=050   lib=29
  xs1=yes   nub=yes
end parameters

read start
  NST=1 XSM=0.00 XSP=21.4173
  YSM=0.00 YSP=21.4173 ZSM=0.00 ZSP=182.88
end start

read mixt  sct=2
mix= 1
' solid uo2 pellet 5.00 w/o (96.5% td, 0% dish)
          1192235     0.0011942
          1192238     0.022404
           118016     0.047196
mix= 2
' h2o at 1.00 g/cc in solid pellet gap
           231001     0.066854
           238016     0.033427
mix= 3
' solid zirc fuel rod cladding
         2140302     0.043326
mix= 4
' h2o at 1.00 g/cc in blanket fuel annulus
           151001     0.066854
           158016     0.033427
mix= 5
' annular uo2 pellet 5.00 w/o (96.5% td)
          2292235     0.0011942
          2292238     0.022404
           228016     0.047196
mix= 6
' h2o at 1.00 g/cc in annular pellet gap
           341001     0.066854
           348016     0.033427
mix= 7
' annular zirc fuel rod cladding
          3240302     0.043326
mix= 8
' h2o at 1.00 g/cc
            31001     0.066854
            38016     0.033427
```

**Table 6-3-24 (cont.) KENO Input Deck for 17OFA – 5.00 WT% Enrichment – 8.5-Inch Annular Pellet Zone – MCC Container with Horizontal Gadolinia Plates**

```
mix= 9
'  carbon steel for strongback & shell
           36012      4.728898e-4
          315031      5.807008e-5
          316032      6.642906e-5
          325055      3.877064e-4
          326000      8.420119e-2
mix= 10
'  gadolinia oxide absorber (0.02 gm gd2o3/cm2 @ 0.01016 cm thickness)
           48016      9.810529e-3
          464152      1.308071e-5
          464154      1.373474e-4
          464155      9.679722e-4
          464156      1.347313e-3
          464157      1.026835e-3
          464158      1.622008e-3
          464160      1.425792e-3
mix= 11
'  carbon steel sheet for gd absorber
           56012      4.728898e-4
          515031      5.807008e-5
          516032      6.642906e-5
          525055      3.877064e-4
          526000      8.420119e-2
end mixt

read geometry
unit 1
com=" 17ofa fuel rod - enriched region"
cylinder    1  1    0.392176  161.29  0.0
cylinder    2  1    0.40005   161.29  0.0
cylinder    3  1    0.45720   161.29  0.0
cuboid      8  1  4p0.62992   161.29  0.0
unit 2
com=" 17ofa guide and instrument tube - enriched region"
cylinder    8  1    0.56134   161.29  0.0
cylinder    3  1    0.60198   161.29  0.0
cuboid      8  1  4p0.62992   161.29  0.0
unit 3
com=" 17ofa fuel rod - blanket region"
cylinder    4  1    0.19685    21.59  0.0
cylinder    5  1    0.392176   21.59  0.0
cylinder    6  1    0.40005    21.59  0.0
cylinder    7  1    0.45720    21.59  0.0
cuboid      8  1  4p0.62992    21.59  0.0
unit 4
com=" 17ofa guide and instrument tube - blanket region"
cylinder    8  1    0.56134    21.59  0.0
cylinder    3  1    0.60198    21.59  0.0
cuboid      8  1  4p0.62992    21.59  0.0
unit 7      com='strong back, horizontal'
  cuboid    9 1 25.413 0.0  0.4572  0.0  204.01  0.0
unit 8      com='strong back, vertical'
  cuboid    9 1 0.4572 0.0  24.14   0.0  204.01  0.0
unit 9      com='verticle gad poison plat between assembly'
  cuboid   11 1 0.0889 0.0  18.415  0.0   204.01  0.0
  cuboid   10 1 .09906 -.01016 18.415 0.0 204.01  0.0
```

**Table 6-3-24 (cont.) KENO Input Deck for 17OFA – 5.00 WT% Enrichment – 8.5-Inch Annular Pellet Zone – MCC Container with Horizontal Gadolinia Plates**

```
unit 10      com='rest of strongback and cradle'
  cuboid     8 1 7.1051 0.5149 12.1851 0.5149 204.01  0.0
  cuboid     9 1 7.62   0.0    12.70   0.0    204.01  0.0
unit 11      com='container flanges and bracket'
  cuboid     9 1 1.285  0.0    22.86   0.0    204.01  0.0
unit 12      com='skid angle'
  cuboid     8 1 7.62   0.9652 7.62    0.9652 204.01  0.0
  cuboid     9 1 7.62   0.0    7.62    0.0    204.01  0.0
unit 13      com='middle top clamping assembly'
  cuboid     9 1 33.02  0.0    5.08     0.0   2.5908  0.0
unit 14      com='middle side clamping assembly'
  cuboid     9 1  5.08  0.0    24.120    0.0   2.5908  0.0
unit 15      com='unistrut channel assembly'
  cuboid     8 1 1.799  0.0    3.556   0.7399 204.01  0.0
  cuboid     9 1 2.538  0.0    3.556   0.0    204.01  0.0
unit 16      com='top clamping assembly'
  cuboid     9 1 33.02  0.0    5.08     0.0   5.1816  0.0
unit 17      com='side clamping assembly'
  cuboid     9 1  5.08  0.0    24.120    0.0   5.1816  0.0
unit 18      com='horizontal gad poison plate below assembly, space 3, 4, 5'
  cuboid    11 1 22.225 0.0  0.0889   0.0   21.59  0.0
  cuboid    10 1 22.225 0.0  .09906 -.01016 21.59  0.0
unit 19      com='horizontal gad poison plate below assembly, space 2 and 6'
  cuboid    11 1 22.225 0.0  0.0889   0.0   53.34  0.0
  cuboid    10 1 22.225 0.0  .09906 -.01016 53.34  0.0
unit 20      com='horizontal gad poison plate below assembly, space 1 and 7'
  cuboid    11 1 22.225 0.0  0.0889   0.0   57.33  0.0
  cuboid    10 1 22.225 0.0  .09906 -.01016 57.33  0.0
global
unit 21
com=" 17ofa assembly in cask "
array 1   0.0       0.0       0.0
cuboid      8  1    43.026   -3.1    31.586    -38.56    205.74   0.0

hole        7  -0.4572  -0.4572   0.0
hole        8  -0.4572   0        0.0
hole        9  -0.8979   0.8128   0.0
hole       10  24.958   -18.237   0.0
hole       11  41.74    -12.7     0.0
hole       12  30.48    -38.55    0.0
hole       13  -1.443    26.50    0.0
hole       14  26.50     2.367    0.0
hole       16  -1.443    26.50    63.93
hole       17  26.50     2.367    63.93
hole       16  -1.443    26.50    130.5
hole       17  26.50     2.367    130.5
hole       16  -1.443    26.50    177.7
hole       17  26.50     2.367    177.7
hole       15  -2.997    20.87    0.0
hole       18   0.0     -0.5563   0.0
hole       18   0.0     -0.5563   31.115
hole       18   0.0     -0.5563   52.705
hole       19   0.0     -0.5563   83.82
hole       20   0.0     -0.5563   146.68
cuboid      9  1    43.25    -3.1    31.81    -38.78    205.74   0.0
end geom.
```

**Table 6-3-24 (cont.) KENO Input Deck for 17OFA – 5.00 WT% Enrichment – 8.5-Inch Annular Pellet Zone – MCC Container with Horizontal Gadolinia Plates**

```
read array
ara=1 nux=17 nuy=17 nuz=2 com=" 17ofa assembly "
loop
 1   1  17   1      1  17   1      1   1   1
 2   3  15   3      6  12   3      1   1   1
 2   4  14  10      4  14  10      1   1   1
 2   6  12   3      3  15  12      1   1   1
 3   1  17   1      1  17   1      2   2   1
 4   3  15   3      6  12   3      2   2   1
 4   4  14  10      4  14  10      2   2   1
 4   6  12   3      3  15  12      2   2   1
end loop
end array
read bounds
all=specular
end bounds
read plot
  ttl='box slice through cask'
  pic=box
  nch='0ugiugiabcdefhjklmnop.'
  xul= -4.0      yul= 30.1      zul= 66.52
  xlr= 45.0      ylr= -40.0     zlr= 66.52
  uax=1.0    vdn=-1.0   nax=130 end
  ttl='box slice through cask'
  pic=mat
  nch='0u.z.u.z.sgs'
  xul= -4.0      yul= 30.1      zul= 66.52
  xlr= 45.0      ylr= -40.0     zlr= 66.52
  uax=1.0    vdn=-1.0   nax=130 end
  ttl='box slice through assembly'
  pic=box
  nch='0ugiugiabcdefhjklmnop.'
  xul= 0.0       yul= 20.0      zul= 66.52
  xlr= 20.0      ylr= 0.0     zlr= 66.52
  uax=1.0    vdn=-1.0   nax=130 end
  ttl='mat slice through annular pellet'
  pic=mat
  nch='0u.z.u.z.sgs'
  xul= 1.41      yul= 4.24    zul= 180.0
  xlr= 4.24      ylr= 1.41    zlr= 180.0
  uax=1.0    vdn=-1.0   nax=130 end
  ttl='mat slice through annular pellet'
  pic=mat
  nch='0u.z.u.z.sgs'
  xul= -1.0      yul= 18.0    zul= 180.0
  xlr= -0.5      ylr= 0.0     zlr= 180.0
  uax=1.0    vdn=-1.0   nax=130  ndn=100  end
end plot
end data
end
```

**Table 6-3-25 KENO Input Deck for 17STD XL – 4.65 WT% Enrichment – 10.75-Inch Annular Pellet Zone – MCC Container with No Horizontal Gadolinia Plates**

```
#job -jn mcc17xl4.65_10.75inann
#
# mcc 17std xl with 10.75-in annular no horizontal gad plates 4.85wt%
#
#
ln -s /opt/wec/etc/227binlib  ftn51
ln -s /opt/wec/etc/albedos  ftn79
ln -s /opt/wec/etc/weights  ftn80
#
/EOF
title-cask with 17std assembly

read parameters
  tme=180   run=yes   plt=no
  gen=400   npg=1500  nsk=050   lib=29
  xsl=yes   nub=yes
end parameters

read start
  NST=1 XSM=0.00 XSP=21.4173
  YSM=0.00 YSP=21.4173 ZSM=0.00 ZSP=182.88
end start

read mixt  sct=2
mix= 1
' solid uo2 pellet 4.85 w/o (96.5% td, 0% dish)
          1192235     1.15848E-03
          1192238     2.24406E-02
           118016     4.71982E-02
mix= 2
' h2o at 1.00 g/cc in solid pellet gap
           231001     0.066854
           238016     0.033427
mix= 3
' solid zirc fuel rod cladding
         2140302     0.043326
mix= 4
' h2o at 1.00 g/cc in blanket fuel annulus
           151001     0.066854
           158016     0.033427
mix= 5
' annular uo2 pellet 4.85 w/o (96.5% td)
          1192235     1.15848E-03
          1192238     2.24406E-02
           118016     4.71982E-02
mix= 6
' h2o at 1.00 g/cc in annular pellet gap
           341001     0.066854
           348016     0.033427
mix= 7
' annular zirc fuel rod cladding
          3240302     0.043326
mix= 8
' h2o at 1.00 g/cc
            31001     0.066854
            38016     0.033427
```