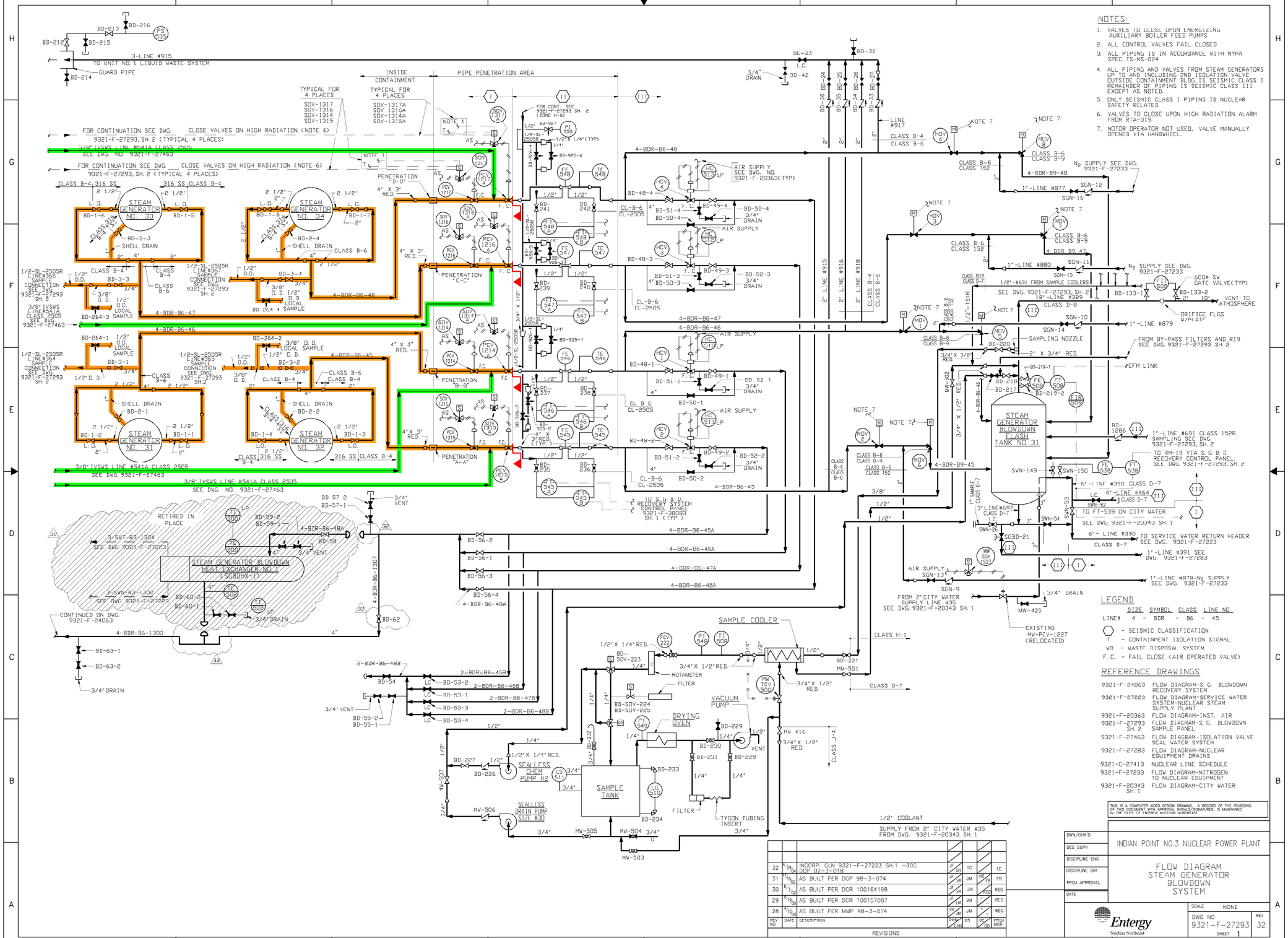
NOTES:
1. VALVES TO CLOSE UPON ENERGIZING AUXILIARY BOILER FEED PUMPS
2. ALL CONTROL VALVES FAIL CLOSED
3. ALL PIPING IS IN ACCORDANCE WITH NYPA SPEC. TS-MS-024
4. ALL PIPING AND VALVES FROM STEAM GENERATORS UP TO AND INCLUDING BD ISOLATION VALVE OUTSIDE CONTAINMENT BLDG. IS SEISMIC CLASS I REMAINDER OF PIPING IS SEISMIC CLASS III EXCEPT AS NOTED.
5. ONLY SEISMIC CLASS I PIPING IS NUCLEAR SAFETY RELATED.
6. VALVES TO CLOSE UPON HIGH RADIATION ALARM FROM RTA-019.
7. MOTOR OPERATOR NOT USED, VALVE MANUALLY OPENED VIA HANDWHEEL.
LEGEND
SIZE SYMBOL CLASS LINE NO.
LINE# 4 - BDR - B6 - 45
- SEISMIC CLASSIFICATION
T - CONTAINMENT ISOLATION SIGNAL
WD - WASTE DISPOSAL SYSTEM
F.C. - FAIL CLOSE (AIR OPERATED VALVE)
REFERENCE DRAWINGS
9321-F-24063 FLOW DIAGRAM-S.G. BLOWDOWN RECOVERY SYSTEM
9321-F-27223 FLOW DIAGRAM-SERVICE WATER SYSTEM-NUCLEAR STEAM SUPPLY PLANT
9321-F-20363 FLOW DIAGRAM-INST. AIR
9321-F-27293 SH. 2 FLOW DIAGRAM-S.G. BLOWDOWN SAMPLE PANEL
9321-F-27463 FLOW DIAGRAM-ISOLATION VALVE SEAL WATER SYSTEM
9321-F-27283 FLOW DIAGRAM-NUCLEAR EQUIPMENT DRAINS
9321-C-27413 NUCLEAR LINE SCHEDULE
9321-F-27233 FLOW DIAGRAM-NITROGEN TO NUCLEAR EQUIPMENT
9321-F-20343 SH. 1 FLOW DIAGRAM-CITY WATER
THIS IS A COMPUTER AIDED DESIGN DRAWING. A RECORD OF THE REVISIONS OF THIS DOCUMENT WITH APPROVAL INITIALS/SIGNATURES, IS MAINTAINED IN THE FILES OF ENTERGY NUCLEAR NORTHEAST
INDIAN POINT NO.3 NUCLEAR POWER PLANT
FLOW DIAGRAM STEAM GENERATOR BLOWDOWN SYSTEM
Entergy Nuclear Northeast
SCALE NONE
DWG NO 9321-F-27293
REV 32
SHEET 1
TYPE A/ISI/FSAR
REVISIONS
32 INCORP. CLN 9321-F-27223 SH.1 -30C
31 AS BUILT PER DCP 98-3-074
30 AS BUILT PER DCR 100164198
29 AS BUILT PER DCR 100157087
28 AS BUILT PER MMP 98-3-074
STEAM GENERATOR NO. 33
STEAM GENERATOR NO. 34
STEAM GENERATOR NO. 31
STEAM GENERATOR NO. 32
STEAM GENERATOR BLOWDOWN FLASH TANK NO. 31
STEAM GENERATOR BLOWDOWN HEAT EXCHANGER NO. 1 (SGBDHX-1)
SAMPLE COOLER
SAMPLE TANK
SEALLESS CHEM PUMP #2
SEALLESS DRAIN PUMP SIZE #30
DRYING OVEN
VACUUM PUMP
ROTAMETER
FILTER
TYGON TUBING INSERT
RETIRED IN PLACE
SYSTEM INTENDED FUNCTION BOUNDARY
COMPONENTS SUBJECT TO AMR
CONTAINMENT ISOLATION SYSTEM (HPC, IVSW, WCPS & WCCPP) AMM-02
BLOWDOWN SYSTEM AMM-25
0 4-6-06 REVISIONS
LRA-9321-27293-001-0
CAD FILE LRA-9321-27293-001_32.DGN
RASTER FILE 9321-27293-001_32.CAL
IMECH

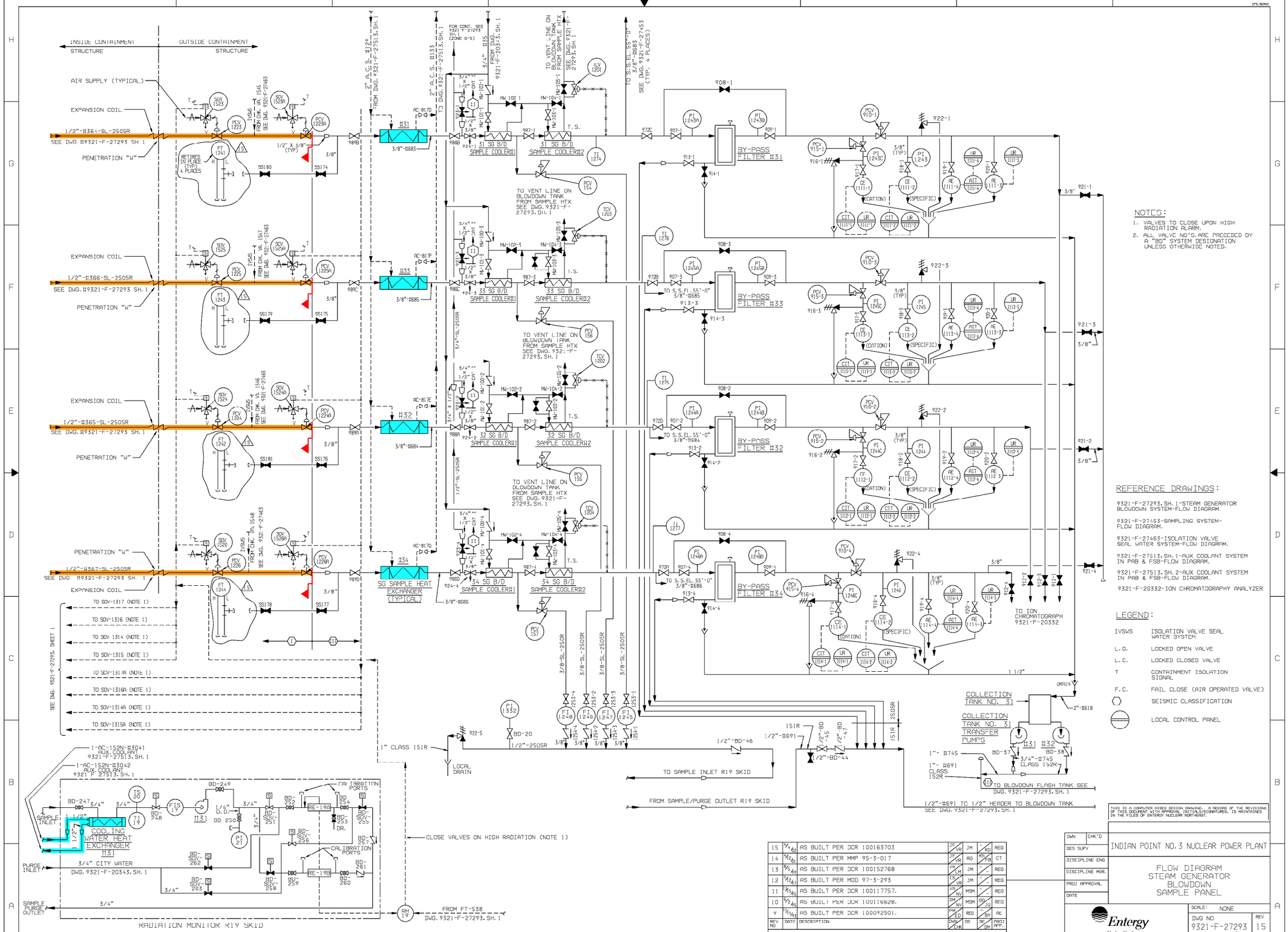

NOTES:

1. VALVES TO CLOSE UPON HIGH RADIATION ALARM.
2. ALL VALVE NO'S. ARE PRECEDED BY A "BD" SYSTEM DESIGNATION UNLESS OTHERWISE NOTED.

REFERENCE DRAWINGS:

9321-F-27293. SH. 1-STEAM GENERATOR BLOWDOWN SYSTEM-FLOW DIAGRAM.

9321-F-27453-SAMPLING SYSTEM-FLOW DIAGRAM.

9321-F-27463-ISOLATION VALVE SEAL WATER SYSTEM-FLOW DIAGRAM.

9321-F-27513. SH. 1-AUX COOLANT SYSTEM IN PAB & FSB-FLOW DIAGRAM.

9321-F-27513. SH. 2-AUX COOLANT SYSTEM IN PAB & FSB-FLOW DIAGRAM.

9321-F-20332-ION CHROMATOGRAPHY ANALYZER

LEGEND:

IVSWS	ISOLATION VALVE SEAL WATER SYSTEM
L.O.	LOCKED OPEN VALVE
L.C.	LOCKED CLOSED VALVE
T	CONTAINMENT ISOLATION SIGNAL
F.C.	FAIL CLOSE (AIR OPERATED VALVE)
⬡	SEISMIC CLASSIFICATION
⊖	LOCAL CONTROL PANEL

SYSTEM INTENDED FUNCTION BOUNDARY

COMPONENTS SUBJECT TO AMR

COMPONENT COOLING WATER SYSTEM AMM-13

BLOWDOWN SYSTEM AMM-25

REV NO	DATE	DESCRIPTION	DWN	CHK	DES	DS	DM	PROJ APP.
15	9/4/06	AS BUILT PER DCR 100163703	JF	JM		RD	REG	
14	5/12/01	AS BUILT PER MMP 95-3-017	JF/VR	RG		KS/FB	CT	
13	8/5/99	AS BUILT PER DCR 100152768	VR/LM	JM		-	REG	
12	7/12/99	AS BUILT PER MOD 97-3-293	TS/VR	JM		-	REG	
11	11/15/96	AS BUILT PER DCR 100117757.	VS/NV	MSM		-	REG	
10	5/2/95	AS BUILT PER DCR 100116628.	DM/NV	MSM		GD/JG	REG	
9	11/13/93	AS BUILT PER DCR 100092501.	PM/ED	RED		BY	AE	

REVISIONS

THIS IS A COMPUTER AIDED DESIGN DRAWING. A RECORD OF THE REVISIONS OF THIS DOCUMENT WITH APPROVAL INITIALS/SIGNATURES. IS MAINTAINED IN THE FILES OF ENTERGY NUCLEAR NORTHEAST.

DWN | CHK'D
DES SUPV
DISCIPLINE ENG
DISCIPLINE MGR.
PROJ APPROVAL
DATE

INDIAN POINT NO. 3 NUCLEAR POWER PLANT

FLOW DIAGRAM
STEAM GENERATOR
BLOWDOWN
SAMPLE PANEL

Entergy
Nuclear Northeast

SCALE: NONE
DWG NO 9321-F-27293
SHEET 2
REV 15

NO.	DATE	DESCRIPTION	BY	ENG	CHK	APP
0	8-8-06					

REVISIONS

LRA-9321-27293-002-0

CAD FILE LRA-9321-27293-002_15.DGN
MASTER FILE 9321-27293-002_15.CAL

TYPE A/ISI/FSAR

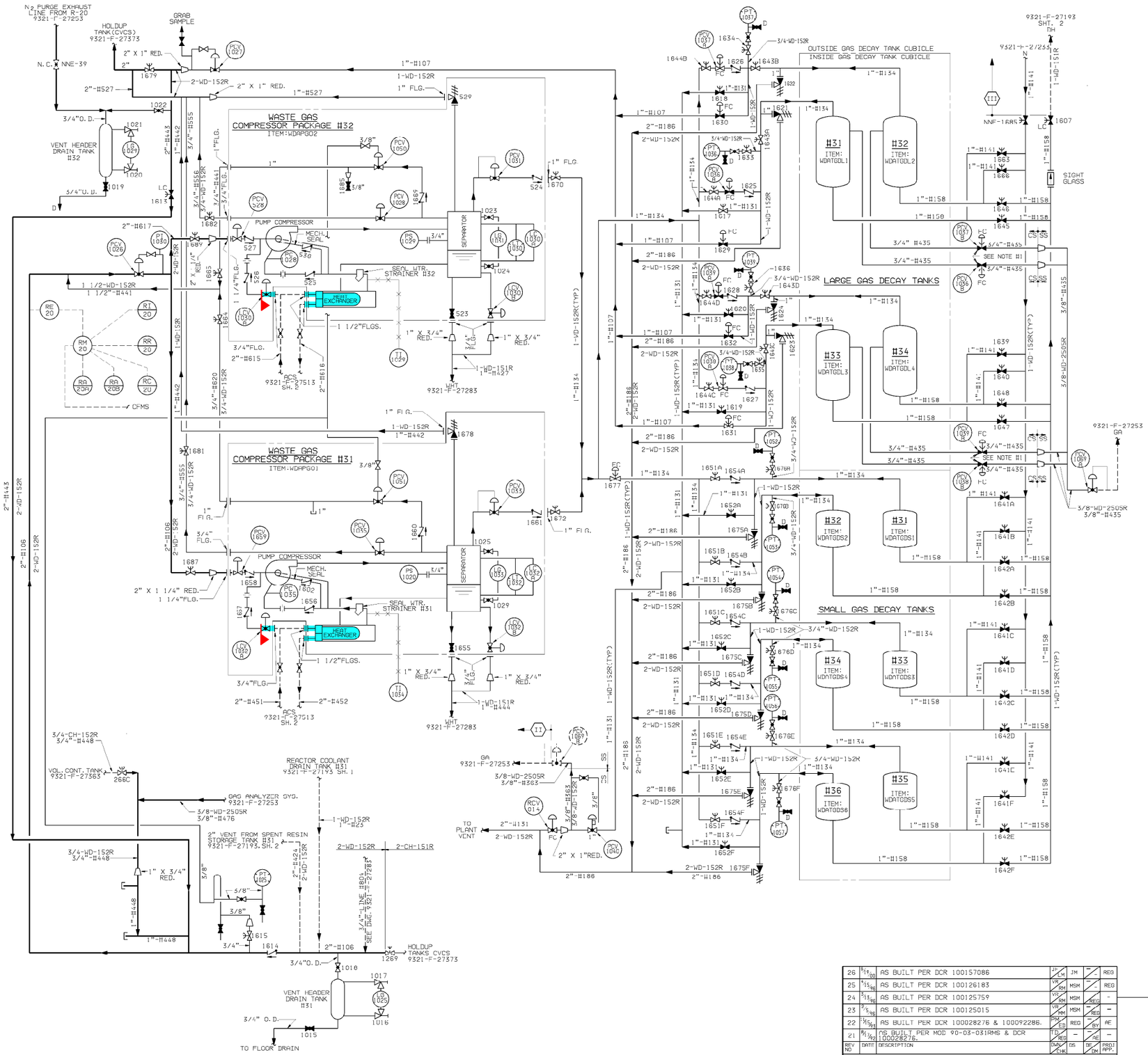

REFERENCES:

1. PROCESS FLOW DIAGRAM (W) DWG.
2. DEFINITION OF SYMBOLS SEE (W) E. SPEC. G675176 REV. 2 AND (W) E. SPEC. 676164 REV. 0
3. INSTALLATION OF INSTRUMENTATION (W) PROC. SPEC. CAP 294367, REV. 1
4. MATERIAL SPEC. PIPE AND FITTINGS SEE NYPA SPEC. TS-MS-024

REFERENCE DRAWINGS

9321-F-27193	WDS	WASTE DISPOSAL SYSTEM SHT.1-CONTAINMENT
9321-F-27363	CVCS	CHEMICAL & VOLUME CONTROL SYS. SHT.1
9321-F-27373	CVCS	CHEMICAL & VOLUME CONTROL SYS. SHT.2
9321-F-27473	RCS	REACTOR COOLANT SYSTEM SHT.2
9321-F-27513	ACS	AUXILIARY COOLANT SYSTEM SHT.2
9321-F-27453	SG	SAMPLING SYSTEM
9321-F-27233	N	NITROGEN TO NUCLEAR EQUIPMENT
9321-F-27283	DH	NUCLEAR EQUIPMENT DRAINS
9321-F-27253	GA	AUTOMATIC GAS ANALYZER SYSTEM
9321-F-27533		HYDROGEN RECOMBINER SYSTEM
9321-C-27413		NUCLEAR LINE SCHEDULE
9321-F-29403		HYDROGEN & CARBON DIOXIDE

LEGEND:

VH - VENT HEADER
GA - AUTOMATIC GAS ANALYZER
DH - DRAIN HEADER
D - LOCAL DRAIN
V - VENT TO ATMOSPHERE
FC - FAIL CLOSED
FO - FAIL OPEN
T - TRIP CLOSED ON HIGH CONTAINMENT PRESSURE
LC - LOCK CLOSED
⟨⟩ - SEISMIC CLASSIFICATION
WHT - WASTE HOLDUP TANK

NOTES:

1. VALVE ACTUATED AUTOMATICALLY BY GAS ANALYZER I AND C CHANNEL NO. AC-1067
2. ALL VALVE NO'S. ARE PRECEDED BY "WD" AS SYSTEM DESIGNATION EXCEPT AS NOTED.

SYSTEM INTENDED FUNCTION BOUNDARY

COMPONENTS SUBJECT TO AMR

COMPONENT COOLING WATER SYSTEM AMM-13

NOTE: ALL PIPING ON THIS DWG. IS SEISMIC CLASS I EXCEPT AS NOTED.

THIS IS A COMPUTER AIDED DESIGN DRAWING. A RECORD OF THE REVISIONS OF THIS DOCUMENT WITH APPROVAL INITIALS/SIGNATURES, IS MAINTAINED IN THE FILES OF ENTERGY NUCLEAR NORTHEAST.

REDRAWN FROM (W) 685J439

REV NO	DATE	DESCRIPTION	DWN/CHK	DS	DS/DM	PROJ APPR.
26	6/16/00	AS BUILT PER DCR 100157086	JT/LM	JM	–	REG
25	4/15/98	AS BUILT PER DCR 100126183	VR/RM	MSM	–	REG
24	3/13/98	AS BUILT PER DCR 100125759	VR/RM	MSM	REG	–
23	9/5/96	AS BUILT PER DCR 100125015	VR/MM	MSM	REG	–
22	2/16/93	AS BUILT PER DCR 100028276 & 100092286.	PM/ED	REG	BY	RF
21	8/1/92	AS BUILT PER MOD 90-03-031RMS & DCR 100028276.	TB/REG	–	RE	–

REVISIONS

DWN	CHK'D	INDIAN POINT NO. 3 NUCLEAR POWER PLANT	
DES SUPV			
DISCIPLINE ENG		FLOW DIAGRAM WASTE DISPOSAL SYSTEM-GAS	
DISCIPLINE MGR.			
PROJ APPROVAL			
DATE			

Entergy Nuclear Northeast

SCALE: NONE

DWG NO 9321-F-27303 SHEET REV 26

NO.	DATE	DESCRIPTION	BY	ENG	CHK	APP
0	8-28-06					

REVISIONS

LRA-9321-27303-0

CAD FILE LRA-9321-27303_26.DGN

MASTER FILE 9321-27303_26.CAL

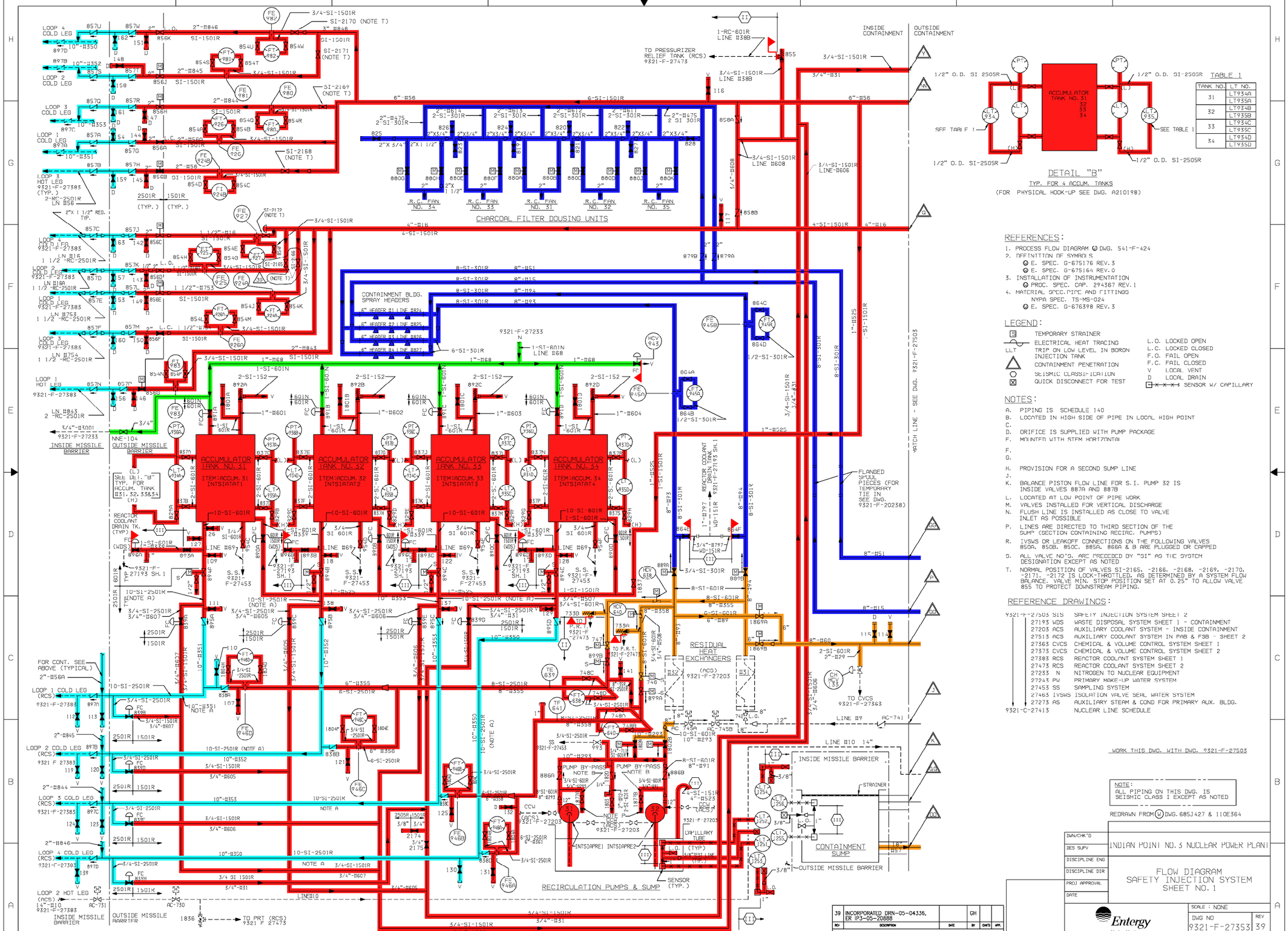

DETAIL "B"

TYP. FOR 4 ACCUM. TANKS

(FOR PHYSICAL HOOK-UP SEE DWG. A210198)

TABLE 1

TANK NO.	LT NO.
31	LT934A
	LT935A
32	LT934B
	LT935B
33	LT934C
	LT935C
34	LT934D
	LT935D

REFERENCES:

1. PROCESS FLOW DIAGRAM Ⓜ DWG. 541-F-424
2. DEFINITION OF SYMBOLS
   - Ⓜ E. SPEC. G-675176 REV. 3
   - Ⓜ E. SPEC. G-675164 REV. 0
3. INSTALLATION OF INSTRUMENTATION
   - Ⓜ PROC. SPEC. CAP. 294367 REV. 1
4. MATERIAL SPEC. PIPE AND FITTINGS
   - NYPA SPEC. TS-MS-024
   - Ⓜ E. SPEC. G-676398 REV. 3

LEGEND:

- S — TEMPORARY STRAINER
- ELECTRICAL HEAT TRACING
- LLT — TRIP ON LOW LEVEL IN BORON INJECTION TANK
- CONTAINMENT PENETRATION
- SEISMIC CLASSIFICATION
- QUICK DISCONNECT FOR TEST
- L.O. — LOCKED OPEN
- L.C. — LOCKED CLOSED
- F.O. — FAIL OPEN
- F.C. — FAIL CLOSED
- V — LOCAL VENT
- D — LOCAL DRAIN
- SENSOR W/ CAPILLARY

NOTES:

A. PIPING IS SCHEDULE 140
B. LOCATED IN HIGH SIDE OF PIPE IN LOCAL HIGH POINT
C.
D. ORIFICE IS SUPPLIED WITH PUMP PACKAGE
E. MOUNTED WITH STEM HORIZONTAL
F.
G.
H. PROVISION FOR A SECOND SUMP LINE
J.
K. BALANCE PISTON FLOW LINE FOR S.I. PUMP 32 IS INSIDE VALVES 887A AND 887B
L. LOCATED AT LOW POINT OF PIPE WORK
M. VALVES INSTALLED FOR VERTICAL DISCHARGE
N. FLUSH LINE IS INSTALLED AS CLOSE TO VALVE INLET AS POSSIBLE
P. LINES ARE DIRECTED TO THIRD SECTION OF THE SUMP (SECTION CONTAINING RECIRC. PUMPS)
R. IVSWS OR LEAKOFF CONNECTIONS ON THE FOLLOWING VALVES 850A, 850B, 850C, 885A, 886A & B ARE PLUGGED OR CAPPED
S. ALL VALVE NO'S. ARE PRECEDED BY "SI" AS THE SYSTEM DESIGNATION EXCEPT AS NOTED
T. NORMAL POSITION OF VALVES SI-2165, -2166, -2168, -2169, -2170, -2171, -2172 IS LOCK-THROTTLED, AS DETERMINED BY A SYSTEM FLOW BALANCE. VALVE MIN. STOP POSITION SET AT 0.25" TO ALLOW VALVE 855 TO PROTECT DOWNSTREAM PIPING.

REFERENCE DRAWINGS:

9321-F-27505	SIS	SAFETY INJECTION SYSTEM SHEET 2
	27193 WDS	WASTE DISPOSAL SYSTEM SHEET 1 - CONTAINMENT
	27203 ACS	AUXILIARY COOLANT SYSTEM - INSIDE CONTAINMENT
	27513 ACS	AUXILIARY COOLANT SYSTEM IN PAB & FSB - SHEET 2
	27363 CVCS	CHEMICAL & VOLUME CONTROL SYSTEM SHEET 1
	27373 CVCS	CHEMICAL & VOLUME CONTROL SYSTEM SHEET 2
	27383 RCS	REACTOR COOLANT SYSTEM SHEET 1
	27473 RCS	REACTOR COOLANT SYSTEM SHEET 2
	27233 N	NITROGEN TO NUCLEAR EQUIPMENT
	27243 PW	PRIMARY MAKE-UP WATER SYSTEM
	27453 SS	SAMPLING SYSTEM
	27465 IVSWS	ISOLATION VALVE SEAL WATER SYSTEM
	27273 AS	AUXILIARY STEAM & COND FOR PRIMARY AUX. BLDG.
9321-C-27413		NUCLEAR LINE SCHEDULE

WORK THIS DWG. WITH DWG. 9321-F-27503

NOTE:
ALL PIPING ON THIS DWG. IS SEISMIC CLASS I EXCEPT AS NOTED

REDRAWN FROM Ⓜ DWG. 685J427 & 110E364

REV	DESCRIPTION	DATE	BY	DWN'D	APP.
39	INCORPORATED DRN-05-04336, ER IP3-05-20888		GH		

REVISIONS

DWN/CHK'D	INDIAN POINT NO. 3 NUCLEAR POWER PLANT
DES SUPV	
DISCIPLINE ENG	FLOW DIAGRAM SAFETY INJECTION SYSTEM SHEET NO. 1
DISCIPLINE DIR	
PROJ APPROVAL	
DATE	

Entergy Nuclear Northeast

SCALE : NONE

DWG NO 9321-F-27353 REV 39

SHEET

TYPE A/ISI/FSAR

SYSTEM INTENDED FUNCTION BOUNDARY

COMPONENTS SUBJECT TO AMR

- CONTAINMENT SPRAY SYSTEM AMM-01
- SAFETY INJECTION SYSTEM AMM-03
- RESIDUAL HEAT REMOVAL AMM-05
- NITROGEN SYSTEMS AMM-10
- REACTOR COOLANT SYSTEM AMM-33

NO.	DATE	DESCRIPTION	BY	ENG	CHK	APP
0	1-19-07					

REVISIONS

LRA-9321-27353-0

CAD FILE LRA-9321-27353_39.DGN

MASTER FILE 9321-27353_39.CAL

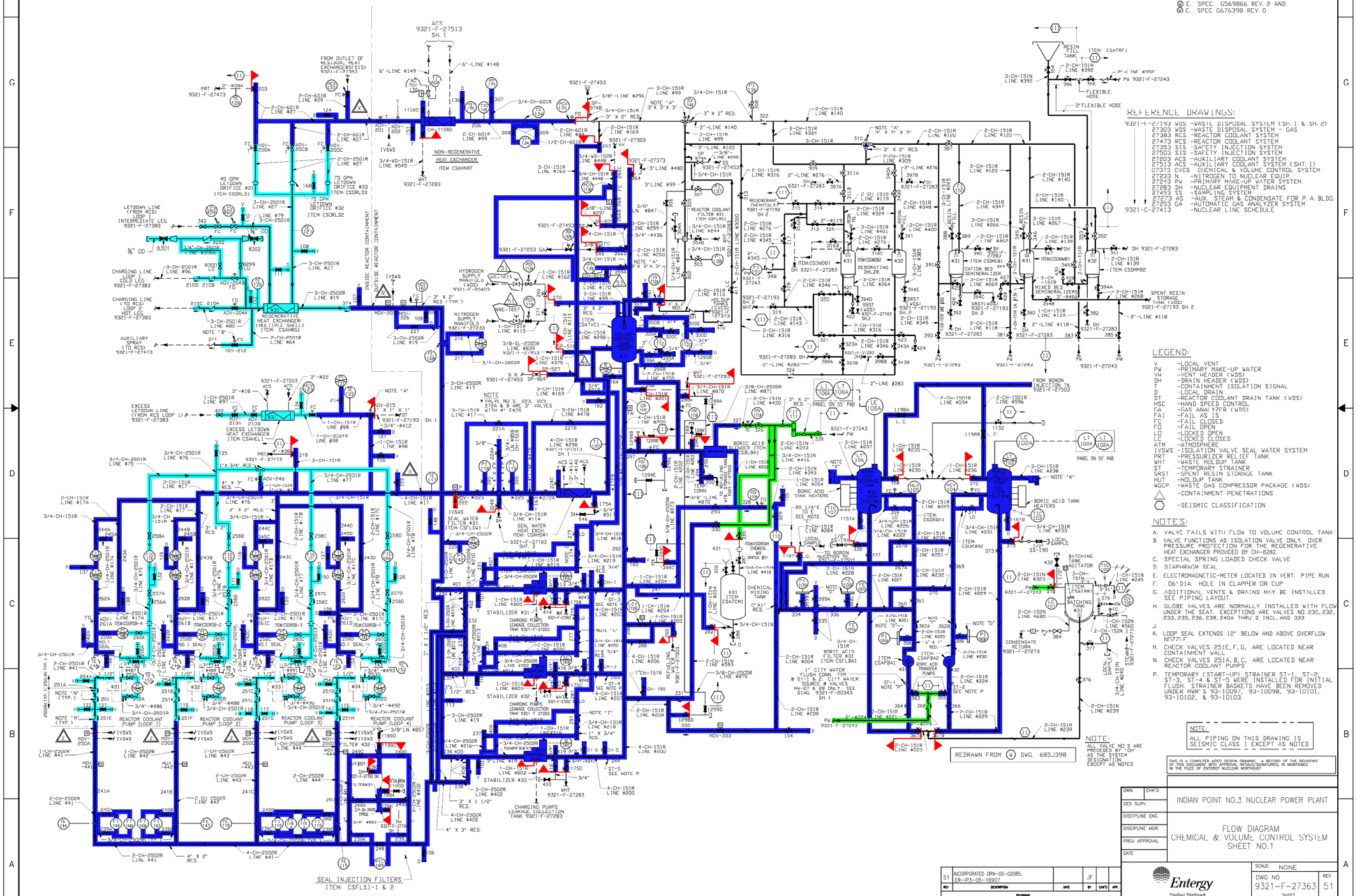

REFERENCES:

1. PROCESS FLOW DIAGRAM (W) DWG.
2. DEFINITION OF SYMBOLS
   (W) E SPEC. 6675176 REV. 2 AND
   (W) E SPEC. 6675164 REV. 0
3. INSTALLATION OF INSTRUMENTATION
   (W) PROC. SPEC. CAP 294367 REV. 1
4. MATERIAL SPEC. PIPE AND FITTINGS
   (W) E. SPEC. G569866 REV. 2 AND
   (W) E. SPEC G676398 REV. 0

REFERENCE DRAWINGS:

9321-F-27193 WDS	-WASTE DISPOSAL SYSTEM (SH. 1 & SH. 2)
27303 WDS	-WASTE DISPOSAL SYSTEM - GAS
27383 RCS	-REACTOR COOLANT SYSTEM
27473 RCS	-REACTOR COOLANT SYSTEM
27353 SIS	-SAFETY INJECTION SYSTEM
27503 SIS	-SAFETY INJECTION SYSTEM
27203 ACS	-AUXILIARY COOLANT SYSTEM
27513 ACS	-AUXILIARY COOLANT SYSTEM (SHT. 1)
27273 CVCS	CHEMICAL & VOLUME CONTROL SYSTEM
27233 N	-NITROGEN TO NUCLEAR EQUIP.
27243 PW	-PRIMARY MAKE-UP WATER SYSTEM.
27283 DH	-NUCLEAR EQUIPMENT DRAINS
27453 SS	-SAMPLING SYSTEM
27273 AS	-AUX. STEAM & CONDENSATE FOR P. A. BLDG.
27253 GA	-AUTOMATIC GAS ANALYZER SYSTEM
9321-C-27413	-NUCLEAR LINE SCHEDULE

LEGEND:

V	-LOCAL VENT
PW	-PRIMARY MAKE-UP WATER
VH	-VENT HEADER (WDS)
DH	-DRAIN HEADER (WDS)
T	-CONTAINMENT ISOLATION SIGNAL
D	-LOCAL DRAIN
DT	-REACTOR COOLANT DRAIN TANK (WDS)
HSC	-HAND SPEED CONTROL
GA	-GAS ANALYZER (WDS)
FAI	-FAIL AS IS
FC	-FAIL CLOSED
FO	-FAIL OPEN
LO	-LOCKED OPEN
LC	-LOCKED CLOSED
ATM	-ATMOSPHERE
IVSWS	-ISOLATION VALVE SEAL WATER SYSTEM
PRT	-PRESSURIZER RELIEF TANK
WHT	-WASTE HOLDUP TANK
ST	-TEMPORARY STRAINER
SRST	-SPENT RESIN STORAGE TANK
HUT	-HOLDUP TANK
WGCP	-WASTE GAS COMPRESSOR PACKAGE (WDS)
△	-CONTAINMENT PENETRATIONS
⬡	-SEISMIC CLASSIFICATION

NOTES:

A. VALVE FAILS WITH FLOW TO VOLUME CONTROL TANK
B. VALVE FUNCTIONS AS ISOLATION VALVE ONLY. OVER PRESSURE PROTECTION FOR THE REGENERATIVE HEAT EXCHANGER PROVIDED BY CH-8282.
C. SPECIAL SPRING LOADED CHECK VALVE
D. DIAPHRAGM SEAL
E. ELECTROMAGNETIC-METER LOCATED IN VERT. PIPE RUN
F. .06"DIA. HOLE IN CLAPPER OR CUP
G. ADDITIONAL VENTS & DRAINS MAY BE INSTALLED SEE PIPING LAYOUT.
H. GLOBE VALVES ARE NORMALLY INSTALLED WITH FLOW UNDER THE SEAT. EXCEPTIONS ARE VALVES NO. 230, 232, 233, 235, 236, 238, 240A THRU D INCL, AND 333
J.
K. LOOP SEAL EXTENDS 12" BELOW AND ABOVE OVERFLOW NOZZLE
M. CHECK VALVES 251E,F,G, ARE LOCATED NEAR CONTAINMENT WALL
N. CHECK VALVES 251A,B,C, ARE LOCATED NEAR REACTOR COOLANT PUMPS
P. TEMPORARY (START-UP) STRAINER ST-1, ST-2, ST-3, ST-4 & ST-5 WERE INSTALLED FOR INITIAL FLUSH. STRAINER BASKETS HAVE BEEN REMOVED UNDER MWR'S 93-10097, 93-10098, 93-10101, 93-10102, & 93-10103.

SYSTEM INTENDED FUNCTION BOUNDARY

COMPONENTS SUBJECT TO AMR

- CONTAINMENT ISOLATION SYSTEM (HPC, IVSW, WCPS & WCCPP) AMM-02
- CHEMICAL AND VOLUME CONTROL SYSTEM AMM-07
- PRIMARY MAKEUP WATER SYSTEM AMM-06
- REACTOR COOLANT SYSTEM AMM-33

NOTE:
ALL PIPING ON THIS DRAWING IS SEISMIC CLASS I EXCEPT AS NOTED

NOTE:
ALL VALVE NO'S ARE PRECEDED BY "CH" AS THE SYSTEM DESIGNATION EXCEPT AS NOTED

THIS IS A COMPUTER AIDED DESIGN DRAWING. A RECORD OF THE REVISIONS OF THIS DOCUMENT WITH APPROVAL INITIALS/SIGNATURES, IS MAINTAINED IN THE FILES OF ENTERGY NUCLEAR NORTHEAST

REV	DESCRIPTION	DATE	BY	CHK'D	APP.
51	INCORPORATED DRN-05-02085, ER-IP3-05-16907		JJF		

REVISIONS

DWN	CHK'D
DES SUPV	
DISCIPLINE ENG	
DISCIPLINE MGR.	
PROJ APPROVAL	
DATE	

INDIAN POINT NO.3 NUCLEAR POWER PLANT

FLOW DIAGRAM
CHEMICAL & VOLUME CONTROL SYSTEM
SHEET NO.1

Entergy
Nuclear Northeast

SCALE: NONE
DWG NO 9321-F-27363
REV 51
SHEET

NO.	DATE	DESCRIPTION	BY	ENG	CHK	APP
0	12-8-06					

REVISIONS

LRA-9321-27363-0

CAD FILE LRA-9321-27363_51.DGN
MASTER FILE 9321-27363_51.CAL

TYPE A/ISI/FSAR

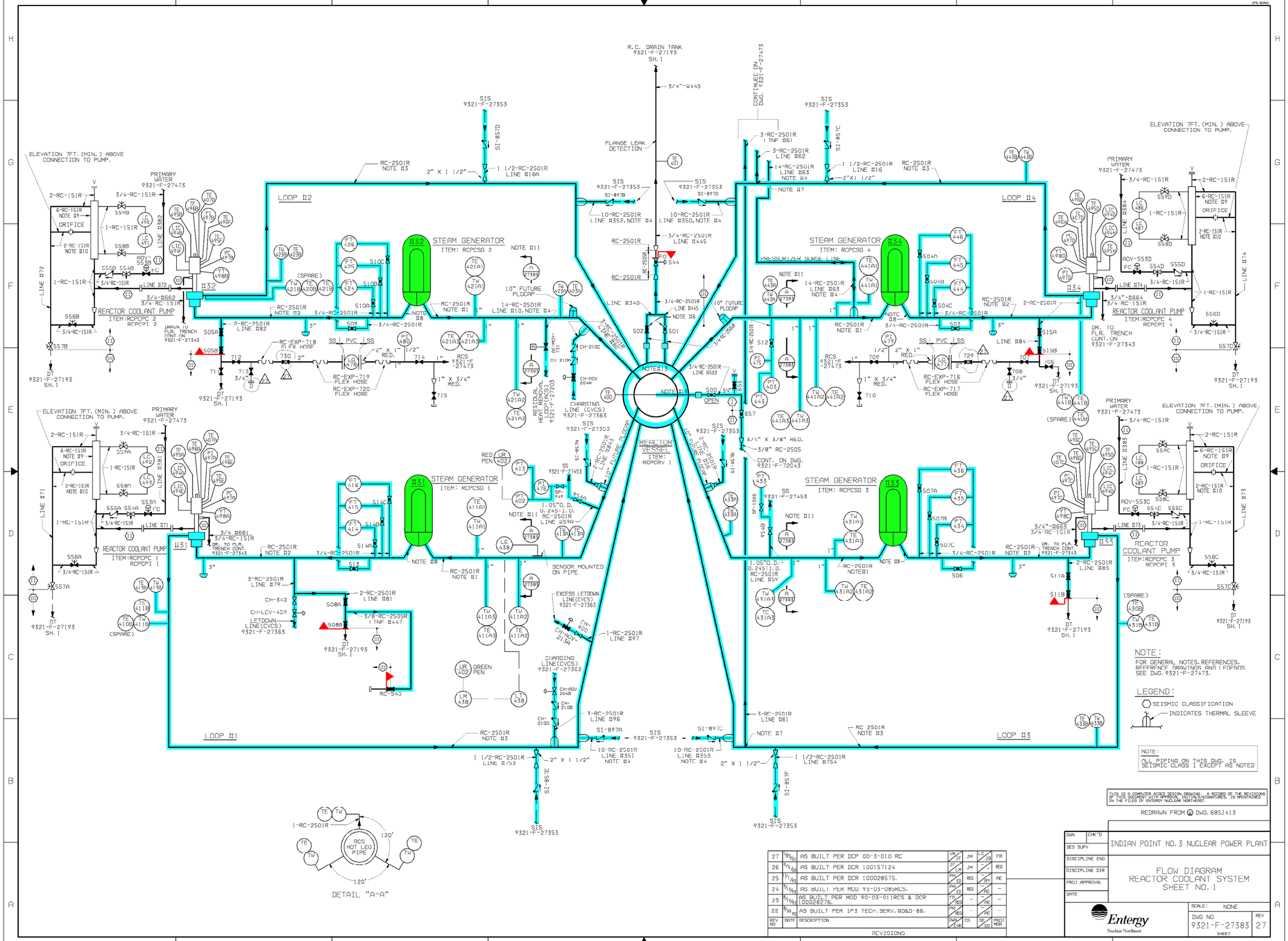
R.C. DRAIN TANK
9321-F-27193
SH. 1
STEAM GENERATOR
ITEM: RCPCSG 2
STEAM GENERATOR
ITEM: RCPCSG 4
STEAM GENERATOR
ITEM: RCPCSG 1
STEAM GENERATOR
ITEM: RCPCSG 3
REACTOR VESSEL
ITEM: RCPCRV 1
REACTOR COOLANT PUMP
ITEM:RCPCPC 2
RCPCPI 2
REACTOR COOLANT PUMP
ITEM:RCPCPC 4
RCPCPI 4
REACTOR COOLANT PUMP
ITEM:RCPCPC 1
RCPCPI 1
REACTOR COOLANT PUMP
ITEM:RCPCPC 3
RCPCPI 3
LOOP #1
LOOP #2
LOOP #3
LOOP #4
PRIMARY WATER
9321-F-27473
ELEVATION 7FT. (MIN.) ABOVE CONNECTION TO PUMP.
DETAIL "A-A"
RCS HOT LEG PIPE
NOTE:
FOR GENERAL NOTES, REFERENCES, REFERENCE DRAWINGS AND LEGENDS SEE DWG. 9321-F-27473.
LEGEND:
SEISMIC CLASSIFICATION
INDICATES THERMAL SLEEVE
NOTE:
ALL PIPING ON THIS DWG. IS SEISMIC CLASS I EXCEPT AS NOTED
THIS IS A COMPUTER AIDED DESIGN DRAWING. A RECORD OF THE REVISIONS OF THIS DOCUMENT WITH APPROVAL INITIALS/SIGNATURES, IS MAINTAINED IN THE FILES OF ENTERGY NUCLEAR NORTHEAST.
REDRAWN FROM W DWG. 685J413
INDIAN POINT NO. 3 NUCLEAR POWER PLANT
FLOW DIAGRAM
REACTOR COOLANT SYSTEM
SHEET NO. 1
SCALE: NONE
DWG NO 9321-F-27383
REV 27
Entergy
Nuclear Northeast
REVISIONS
27 9/25/01 AS BUILT PER DCP 00-3-010 RC
26 6/5/00 AS BUILT PER DCR 100157124
25 7/1/97 AS BUILT PER DCR 100028575.
24 5/13/97 AS BUILT PER MOD 95-03-089RCS.
23 8/11/93 AS BUILT PER MOD 90-03-011RCS & DCR 100028276.
22 8/30/90 AS BUILT PER IP3 TECH. SERV. HD&D-86.
SYSTEM INTENDED FUNCTION BOUNDARY
COMPONENTS SUBJECT TO AMR
REACTOR COOLANT SYSTEM AMM-33
STEAM GENERATORS AMM-34
0 1-19-07
REVISIONS
LRA-9321-27383-0
CAD FILE LRA-9321-27383_27.DGN
MASTER FILE 9321-27383_27.CAL
TYPE A/ISI/FSAR

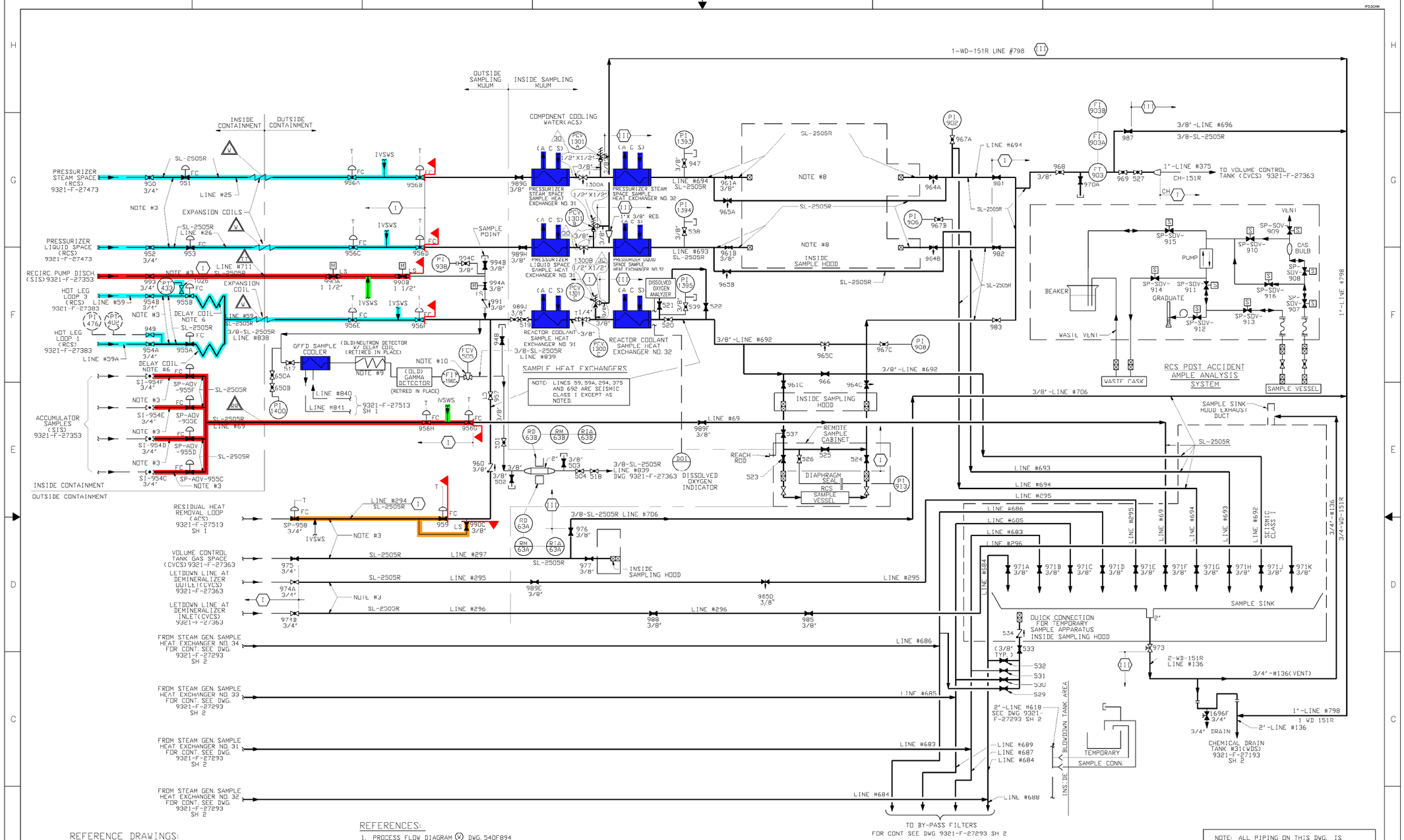

REFERENCE DRAWINGS:

9321-F-27363	CHEMICAL & VOLUME CONTROL SYSTEM--SHEET #1
9321-F-27373	CHEMICAL & VOLUME CONTROL SYSTEM--SHEET #2
9321-F-27383	REACTOR COOLANT SYSTEM--SHEET #1
9321-F-27293 SH 2	STEAM GENERATOR BLOWDOWN SYSTEM
9321-F-27513 SH 1	AUXILIARY COOLANT SYSTEM--SHEET #1
9321-F-27193 SH 2	WASTE DISPOSAL SYSTEM--SHEET #2
9321-F-27303	WASTE DISPOSAL SYSTEM GAS
9321-F-27353	SAFETY INJECTION SYSTEM--SHEET #1
9321-F-27463	ISOLATION VALVE SEAL WATER SYSTEM
9321-F-27243	PRIMARY WATER SYSTEM NUCLEAR STEAM SUPPLY PLANT
9321-C-27413	NUCLEAR LINE SCHEDULE

REFERENCES:

1. PROCESS FLOW DIAGRAM (W) DWG. 540F894
2. DEFINITION OF SYMBOLS
   (W) E. SPEC. G675176 REV. 2 AND
   (W) E. SPEC. G675164 REV. 0
3. INSTALLATION OF INSTRUMENTATION
   (W) PROC. SPEC. CAP-294367 REV. 1
4. MATERIAL SPEC.PIPE AND FITTINGS
   NYPA SPEC. TS-MS-024
   (W) E. SPEC. G676398 REV. 0

LEGEND:

FC-FAIL CLOSED
⬡-SEISMIC CLASSIFICATION
T-THROTTLED
LS-LOCKED SHUT
⊠-QUICK DISCONNECT FOR TEST

NOTES:

1. ALL TUBING IS 3/8" O.D. EXCEPT AS DETAILED.
2. ALL VALVES INSTALLED WITH FLOW UNDER SEAT EXCEPT VALVE NUMBERS 968, 970A.
3. 3/4" STD PIPE X 3/8" TUBING INSERT AT 3/4" VALVES.
4. ADDITIONAL VENTS AND DRAINS MAY BE INSTALLED BASED ON PIPE LAYOUT.
5. ALL CHECK VALVES ARE "Y" TYPE LIFT CHECK.
6. DELAY COIL-125 FT. X 3/8" O.D. TUBING X 0.245" I.D. INSIDE CONT. BLDG.
7. ALL VALVE NO'S ARE PRECEDED BY "SP" EXCEPT AS NOTED.
8. SAMPLE VESSEL HAS BEEN RETIRED.
9. DELAY COIL IS 3/8" O.D. TUBING X 0.245" I.D.
10. FCV-505 IS SELF REGULATING FLOW CONTROLLER (DWG. 1P3V-439-0638).

REV NO	DATE	DESCRIPTION	DWN/CHK	DS	PE/DD	PROJ MGR
30	11/6/06	AS BUILT PER DCR 100165421	JP LM	JM	S.C. RSR	REG
29	6/19/06	AS BUILT PER DCR 100157092	JP LM	JM	—	REG
28	5/5/06	AS BUILT PER DCR 100156929	JP LM	JM	—	REG
27	3/26/06	AS BUILT PER DCR 100144032	VR LM	LM	—	REG
26	8/21/96	AS BUILT PER MOD 96-3-119PS	JS MM	MJM	—	FR

REVISIONS

REDRAWN FROM (W) DWG. 541F428

NOTE: ALL PIPING ON THIS DWG. IS SEISMIC CLASS II EXCEPT AS NOTED

THIS IS A COMPUTER AIDED DESIGN DRAWING. A RECORD OF THE REVISIONS OF THIS DOCUMENT WITH APPROVAL INITIALS/SIGNATURES, IS MAINTAINED IN THE FILES OF ENTERGY NUCLEAR NORTHEAST

DWN / CHK'D	
DES SUPV	
DISCIPLINE ENG	
DISCIPLINE DIR	
PROJ APPROVAL	
DATE	

INDIAN POINT NO.3 NUCLEAR POWER PLANT

FLOW DIAGRAM
SAMPLING SYSTEM

Entergy
Nuclear Northeast

SCALE: NONE
DWG NO 9321-F-27453
REV 30
SHEET

TYPE A/ISI/FSAR

SYSTEM INTENDED FUNCTION BOUNDARY

COMPONENTS SUBJECT TO AMR

- CONTAINMENT ISOLATION SYSTEM (HPC, IVSW, WCPS & WCCPP) AMM-02
- SAFETY INJECTION SYSTEM AMM-03
- RESIDUAL HEAT REMOVAL AMM-05
- COMPONENT COOLING WATER SYSTEM AMM-13
- REACTOR COOLANT SYSTEM AMM-33

NO.	DATE	DESCRIPTION	BY	ENG	CHK	APP
0	12-8-06					

REVISIONS

LRA-9321-27453-0

CAD FILE LRA-9321-27453_30.DGN
MASTER FILE 9321-27453_30.CAL

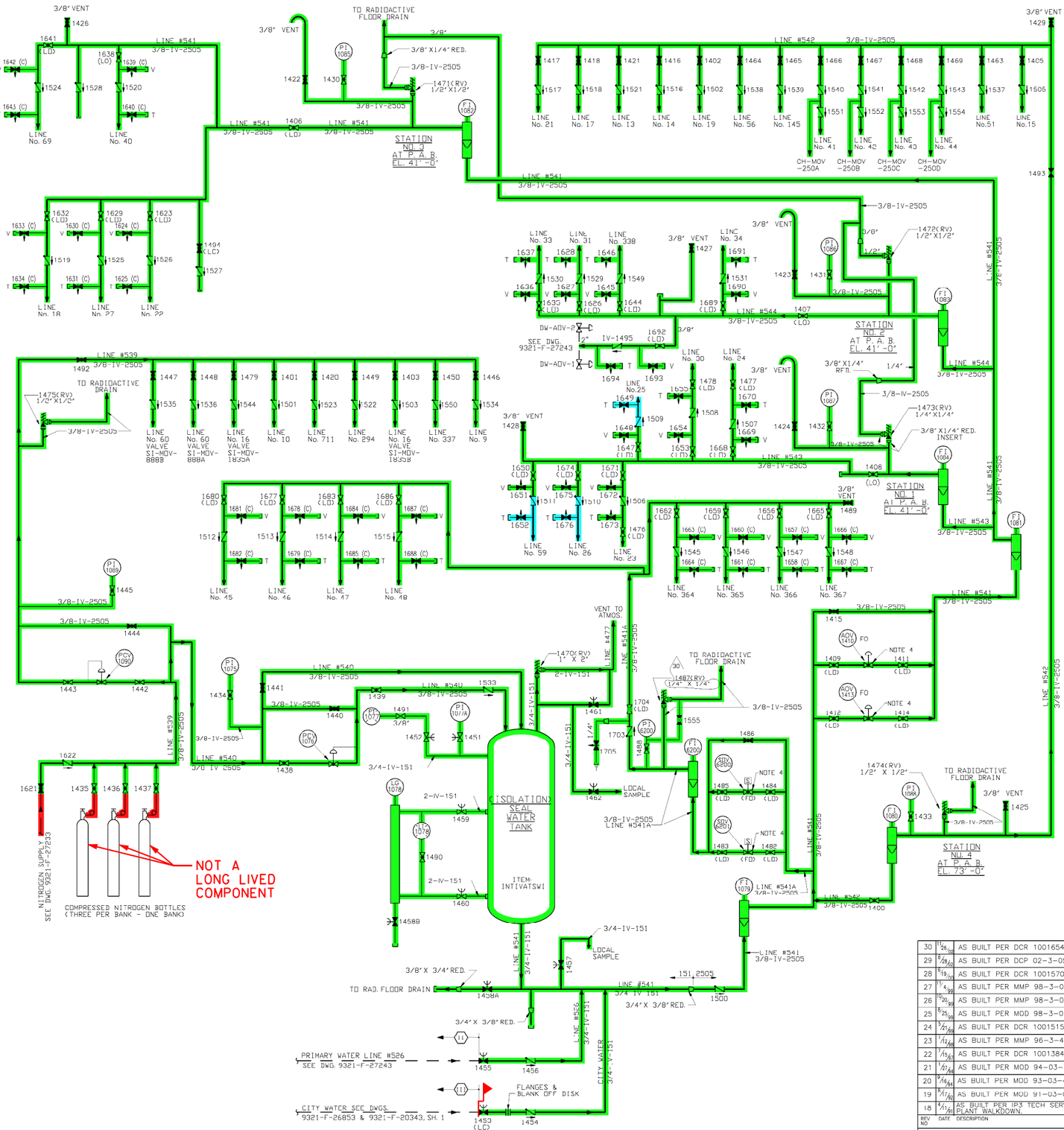

PENETRATION LIST

SEAL CONN. TO LINE No.	INJECTION POINT LOCATION	CONTAINMENT PENETRATION SLEEVE No.	LINE DESCRIPTION	INJECTION POINTS (SEE NOTE 6)	REMARKS
9	PIPE TRENCH	J	RESIDUAL HEAT REMOVAL LOOP IN	AC-MOV-744	N_2 INJ.
10	PIPE TRENCH	K	RESIDUAL HEAT REMOVAL LOOP OUT	AC-732	N_2 INJ.
337	PIPE TRENCH	NONE	RHR PUMP MINIFLOW OUT	AC-MOV-743 & AC-MOV-1870	N_2 INJ.
13	PIPE TRENCH	N	R.C. PUMPS COOLING WATER IN	AC-797 & AC-769	
14	PIPE TRENCH	O	R.C. PUMPS COOLING WATER OUT	AC-MOV-784 & AC-MOV-786	
21	PIPE TRENCH	O	R.C. PUMPS COOLING WATER OUT	AC-FCV-625 & AC-MOV-789	
15	PIPE TRENCH	P	CONTAINMENT SPRAY HEADER	SI-869B	
16	PIPE TRENCH	Q	SAFETY INJECTION LINE FROM BORON INJECTION TANK	SI-MOV-1835A	N_2 INJ.
17	PIPE TRENCH	R	R.C. PUMPS SEAL WATER RETURN	CH-MOV-222	
18	PIPE TRENCH	H	EXCESS LETDOWN HEAT EXCH. COOLING WATER RETURN	AC-AOV-793 & AC-AOV-798	
19	PIPE TRENCH	R	CHARGING LINE	CH-MOV-205 & CH-MOV-226	
		S	SPARE		
		T	SPARE		
22	PIPE TRENCH	U	EXCESS LETDOWN HEAT EXCH. COOLING WATER SUPPLY	AC-AOV-791 & AC-AOV-798	
23	PIPE TRENCH	V	CONTAINMENT VENT HEADER	WD-AOV-1786 & WD-AOV-1787	
24	PIPE TRENCH	V	P.R.T. GAS ANALYZER LINE	RC-MOV-548 & RC-MOV-549	
25	PIPE TRENCH	W	PRESSURIZER STEAM SAMPLE	SP-AOV-956A & SP-AOV-956B	
26	PIPE TRENCH	W	PRESSURIZER LIQUID SAMPLE	SP-AOV-956C & SP-AOV-956D	
27	PIPE TRENCH	X	LETDOWN LINE	CH-AOV-201 & CH-AOV-202	
30	PIPE TRENCH	V	R.C. DRAIN TANK GAS ANALYZER LINE	WD-AOV-1788 & WD-AOV-1789	
31	PIPE TRENCH	Y	S.I.S. TEST LINE	SI-859A & SI-859C	
33	PIPE TRENCH	Y	P.R.T. MAKE-UP LINE	RC-AOV-519 & RC-AOV-552	
34	PIPE TRENCH	Y	STATION AIR	SA-24-1 & SA-24-2	
40	PIPE TRENCH	Z	R.C. DRAIN TANK PUMP DISCHARGE	WD-AOV-1702 & WD-AOV-1705	
41	PIPE TRENCH	Z	R.C. PUMP 31 SEAL INJECTION SUPPLY	CH-MOV-441 & CH-MOV-250A	
42	PIPE TRENCH	Z	R.C. PUMP 32 SEAL INJECTION SUPPLY	CH-MOV-442 & CH-MOV-250B	
43	PIPE TRENCH	Z	R.C. PUMP 33 SEAL INJECTION SUPPLY	CH-MOV-443 & CH-MOV-250C	
44	PIPE TRENCH	Z	R.C. PUMP 34 SEAL INJECTION SUPPLY	CH-MOV-444 & CH-MOV-250D	
45	PIPE TRENCH	AA	STEAM GENERATOR 32 BLOWDOWN LINE	BD-PCV-1215 & BD-PCV-1215A	
46	PIPE TRENCH	BB	STEAM GENERATOR 31 BLOWDOWN LINE	BD-PCV-1214 & BD-PCV-1214A	
47	PIPE TRENCH	CC	STEAM GENERATOR 33 BLOWDOWN LINE	BD-PCV-1216 & BD-PCV-1216A	
48	PIPE TRENCH	DD	STEAM GENERATOR 34 BLOWDOWN LINE	BD-PCV-1217 & BD-PCV-1217A	
51	PIPE TRENCH	GG	CONTAINMENT SPRAY HEADER	SI-869A	
16	IN PAB	Q	SAFETY INJECTION LINE FROM BORON INJECTION TANK	SI-MOV-1835B	N_2 INJ.
145	IN PAB	NN	SAFETY INJECTION LINE FROM SAFETY INJECTION PUMPS	SI-851A	
56	PIPE TRENCH	NN	SAFETY INJECTION LINE FROM SAFETY INJECTION PUMPS	SI-MOV-850A & SI-MOV-850C	
59	PIPE TRENCH	W	REACTOR COOLANT SAMPLE LINE	SP-AOV-956E & SP-AOV-956F	
60	PIPE TRENCH	QQ	RESIDUAL HEAT EXCH. TO SAFETY INJECTION PUMPS	SI-MOV-888A	N_2 INJ.
60	PIPE TRENCH	QQ	RESIDUAL HEAT EXCH. TO SAFETY INJECTION PUMPS	SI-MOV-888B	N_2 INJ.
69	PIPE TRENCH	RR	ACCUMULATOR SAMPLE LINE	SP-AOV-956G & SP-AOV-956H	
338	PIPE TRENCH	Y	V.C. SUMP PUMP DISCHARGE	WD-AOV-1723 & WD-AOV-1728	
364	PIPE TRENCH	W	STEAM GENERATOR 31 BLOWDOWN SAMPLE	BD-PCV-1223 & BD-PCV-1223A	
365	PIPE TRENCH	W	STEAM GENERATOR 32 BLOWDOWN SAMPLE	BD-PCV-1224 & BD-PCV-1224A	
366	PIPE TRENCH	W	STEAM GENERATOR 33 BLOWDOWN SAMPLE	BD-PCV-1225 & BD-PCV-1225A	
367	PIPE TRENCH	W	STEAM GENERATOR 34 BLOWDOWN SAMPLE	BD-PCV-1226 & BD-PCV-1226A	
711	PIPE TRENCH	TT	RECIRC. PUMP DISCHARGE SAMPLE	SP-MOV-990A & SP-MOV-990B	N_2 INJ.
294	PIPE TRENCH	NONE	RESIDUAL HEAT REMOVAL LOOP SAMPLE	AC-MOV-958 & SP-AOV-959	N_2 INJ.

REFERENCES:

1. DEFINITION OF SYMBOLS ----- (W) E. SPEC. G. 675176 REV. 2
2. INSTRUMENT & CONTROL STD. -- (W) SYMBOLS & APPLICATIONS FOR INST. DIAG. SECTION 1.1, ISSUED AUG. 12, 1966
   INSTRUMENT & CONTROL STD. -- (W) INST. INSTALLATION. SECTION 3.0 ISSUED IN JUNE, 1966.
3. MATERIAL SPEC. & FITTINGS-- NYPA SPEC. TS-MS-024

REFERENCE DRAWINGS:

9321-C-27413	NUCLEAR LINE SCHEDULE
9321-F-27473	REACTOR COOLANT SYSTEM SHEET NO. 2
9321-F-27369	CHEMICAL & VOLUME CONTROL SYSTEM SHEET NO. 1
9321-F-27193	WASTE DISPOSAL SYSTEM SHEET NO. 1-CONTAINMENT
9321-F-27503	SAFETY INJECTION SYSTEM SHEET NO. 2
9321-F-27453	SAMPLING SYSTEM
9321-F-27293	STEAM GEN. BLOWDOWN SYSTEM SHEETS NO 1 & 2
9321-F-40523	STEAM & COND. DISTRIBUTION HEADERS SHEET NO. 2
9321-F-27513	AUXILIARY COOLANT SYSTEM SHEET NO. 2
9321-F-27243	PRIMARY MAKE-UP WATER SYSTEM
9321-F-27683	ISOLATION VALVE SEAL WATER PIPING SHEET NO. 1
9321-F-27693	ISOLATION VALVE SEAL WATER PIPING SHEET NO. 2

LEGEND:

PW -----PRIMARY WATER
FC-----FAIL CLOSED
FO -----FAIL OPEN
CW -----CITY WATER
LO -----LOCKED OPEN
D -----FINAL DRAIN
LC -----LOCKED CLOSED
⬡ -----SEISMIC CLASSIFICATION
V -----VENT
T -----TEST

GENERAL NOTES:

1. ALL PIPING IS 3/8" S. S. , O. D. TUBING (LINE DESIGNATIONS) 3/8-IV-2505 EXCEPT AS NOTED.
2. ADDITIONAL VENTS AND DRAINS MAY BE INSTALLED, SEE PIPING LAYOUT.
3. THE INDIVIDUAL SEAL WATER LINES ARE ROUTED TO THE CONTAINMENT ISOLATION POINTS BY THE VALVE NUMBERS INDICATED.
4. VALVES ADV-1410 & ADV-1413 & SDV-6200 & SDV-6201 ARE OPENED AUTOMATICALLY BY A PHASE "A" CONTAINMENT ISOLATION SIGNAL.
5. ALL VALVE NO'S. ARE PRECEDED BY 'IV' AS THE SYSTEM DESIGNATION, EXCEPT AS NOTED.
6. SEAL WATER IS INJECTED BETWEEN THE SEATS AND STEM PACKING OF SINGLE VALVES AND INTO THE PIPING BETWEEN TWO VALVES. ONE AND TWO VALVE NO'S. ARE THEREFORE FURNISHED RESPECTIVELY.

NOTE:
ALL PIPING ON THIS DWG. IS SEISMIC CLASS I EXCEPT AS NOTED.

REV NO	DATE	DESCRIPTION	DWN/CHK	DS	DS/DD	PROJ MGR
30	11/26/06	AS BUILT PER DCR 100165423	JF/LM	JM	LC/RG	REG
29	8/28/03	AS BUILT PER DCP 02-3-054	JF/VR	LM	JB	LM
28	11/19/02	AS BUILT PER DCR 100157095	JF/LM	JM	/	REG
27	11/4/99	AS BUILT PER MMP 98-3-056 IVSWS	VR/JM	JM	/	REG
26	10/20/99	AS BUILT PER MMP 98-3-056 IVSWS	VR/JF	JM	/	REG
25	8/25/99	AS BUILT PER MOD 98-3-056 IVSWS	JF/VR	LM	/	FR
24	3/21/02	AS BUILT PER DCR 100151508	VR/LM	JM	/	REG
23	1/12/00	AS BUILT PER MMP 96-3-447 IVSW	VR/LM	JM	/	REG
22	7/15/97	AS BUILT PER DCR 100138485	JS/RM	JM	/	REG
21	1/21/94	AS BUILT PER MOD 94-03-186SIS.	CV/GK	NV	/ BY	REG
20	9/16/94	AS BUILT PER MOD 93-03-442CVCS.	MSS/ED	REG	/ BY	AE
19	8/17/92	AS BUILT PER MOD 91-03-072IVSW.	PM/REG	—	/ AE	—
18	4/21/91	AS BUILT PER IP3 TECH SERV.#TS-504M & PLANT WALKDOWN.	PM/REG	—	/ AE	—

REVISIONS

THIS IS A COMPUTER AIDED DESIGN DRAWING. A RECORD OF THE REVISIONS OF THIS DOCUMENT WITH APPROVAL INITIALS/SIGNATURES, IS MAINTAINED IN THE FILES OF ENTERGY NUCLEAR NORTHEAST

REDRAWN FROM (W) DWG. 113E285

DWN/CHK'D	
DES SUPV	
DISCIPLINE ENG	
DISCIPLINE DIR	
PROJ APPROVAL	
DATE	

INDIAN POINT NO.3 NUCLEAR POWER PLANT

FLOW DIAGRAM
ISOLATION VALVE SEAL
WATER SYSTEM

Entergy
Nuclear Northeast

SCALE NONE
DWG NO 9321-F-27463
SHEET
REV 30

NO.	DATE	DESCRIPTION	BY	ENG	CHK	APP
0	12-6-06					

REVISIONS

LRA-9321-27463-0

CAD FILE LRA-9321-27463_30.DGN
RASTER FILE 9321-27463_30.CAL

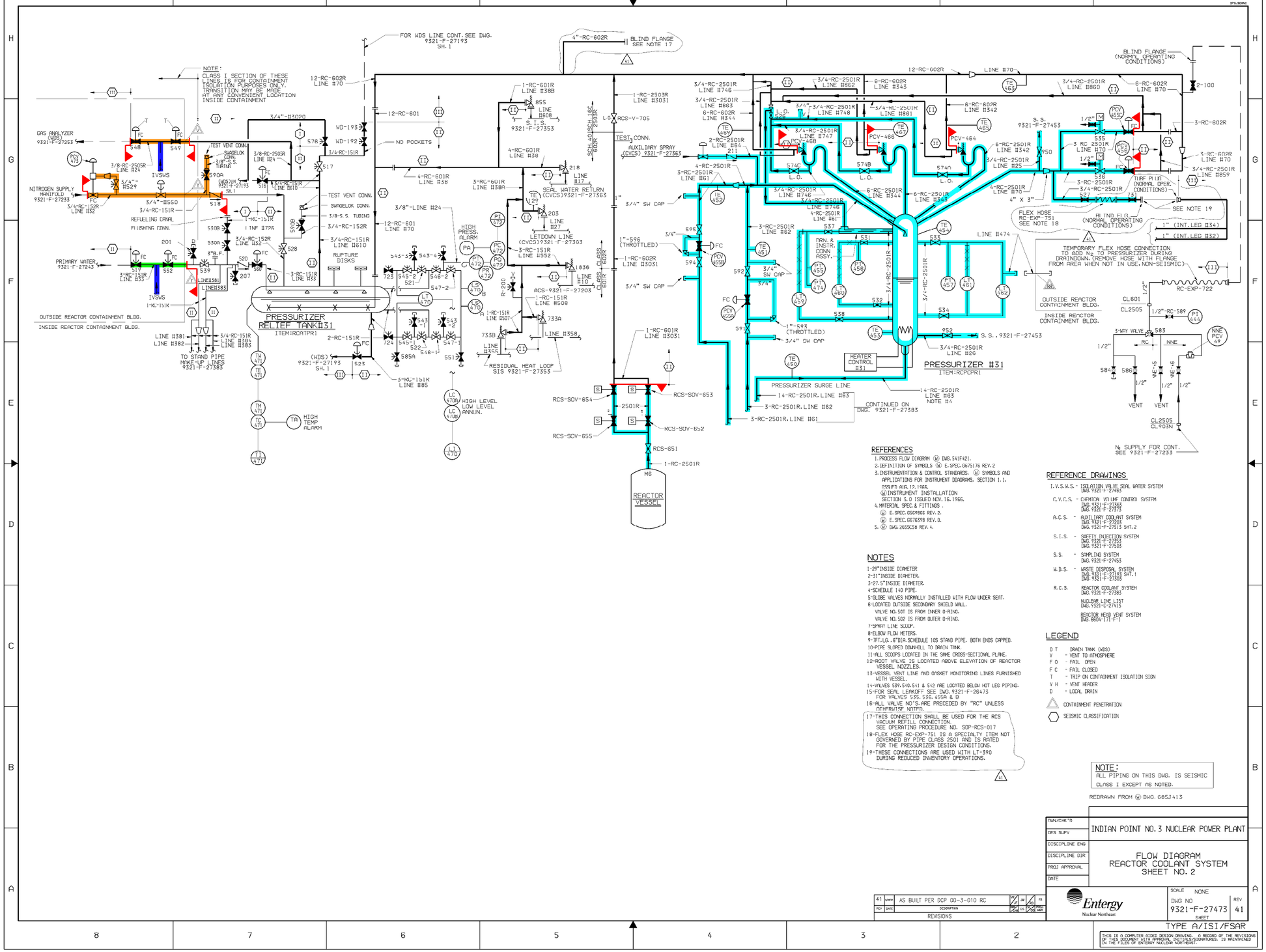

REFERENCES

1. PROCESS FLOW DIAGRAM (W) DWG.541F421.
2. DEFINITION OF SYMBOLS (W) E-SPEC.G675176 REV.2
3. INSTRUMENTATION & CONTROL STANDARDS. (W) SYMBOLS AND APPLICATIONS FOR INSTRUMENT DIAGRAMS. SECTION 1.1. ISSUED AUG.12.1966.
   (W) INSTRUMENT INSTALLATION SECTION 5.0 ISSUED NOV.16.1966.
4. MATERIAL SPEC.& FITTINGS .
   (W) E-SPEC.G669866 REV.2.
   (W) E-SPEC.G676598 REV.0.
5. (W) DWG.265SC58 REV.4.

NOTES

1-29"INSIDE DIAMETER
2-31"INSIDE DIAMETER.
3-27.5"INSIDE DIAMETER.
4-SCHEDULE 140 PIPE.
5-GLOBE VALVES NORMALLY INSTALLED WITH FLOW UNDER SEAT.
6-LOCATED OUTSIDE SECONDARY SHIELD WALL.
  VALVE NO.507 IS FROM INNER O-RING.
  VALVE NO.502 IS FROM OUTER O-RING.
7-SPRAY LINE SCOOP.
8-ELBOW FLOW METERS.
9-7FT.LG.,6"DIA.SCHEDULE 10S STAND PIPE, BOTH ENDS CAPPED.
10-PIPE SLOPED DOWNHILL TO DRAIN TANK.
11-ALL SCOOPS LOCATED IN THE SAME CROSS-SECTIONAL PLANE.
12-ROOT VALVE IS LOCATED ABOVE ELEVATION OF REACTOR VESSEL NOZZLES.
13-VESSEL VENT LINE AND GASKET MONITORING LINES FURNISHED WITH VESSEL.
14-VALVES 539,540,541 & 542 ARE LOCATED BELOW HOT LEG PIPING.
15-FOR SEAL LEAKOFF SEE DWG.9321-F-26473 FOR VALVES 535,536,455A & B
16-ALL VALVE NO'S.ARE PRECEDED BY "RC" UNLESS OTHERWISE NOTED.
17-THIS CONNECTION SHALL BE USED FOR THE RCS VACUUM REFILL CONNECTION. SEE OPERATING PROCEDURE NO. SOP-RCS-017
18-FLEX HOSE RC-EXP-751 IS A SPECIALTY ITEM NOT GOVERNED BY PIPE CLASS 2501 AND IS RATED FOR THE PRESSURIZER DESIGN CONDITIONS.
19-THESE CONNECTIONS ARE USED WITH LT-390 DURING REDUCED INVENTORY OPERATIONS.

41

REFERENCE DRAWINGS

I.V.S.W.S. - ISOLATION VALVE SEAL WATER SYSTEM
DWG. 9321-F-27463

C.V.C.S. - CHEMICAL VOLUME CONTROL SYSTEM
DWG. 9321-F-27363
DWG. 9321-F-27533

A.C.S. - AUXILIARY COOLANT SYSTEM
DWG. 9321-F-27203
DWG. 9321-F-27513 SHT. 2

S.I.S. - SAFETY INJECTION SYSTEM
DWG. 9321-F-27353
DWG. 9321-F-27503

S.S. - SAMPLING SYSTEM
DWG. 9321-F-27453

W.D.S. - WASTE DISPOSAL SYSTEM
DWG. 9321-F-27193 SHT. 1
DWG. 9321-F-27303

R.C.S. REACTOR COOLANT SYSTEM
DWG. 9321-F-27383

NUCLEONIC LINE LIST
DWG. 9321-C-27413

REACTOR HEAD VENT SYSTEM
DWG. 8604-171-F-1

LEGEND

D T - DRAIN TANK (WDS)
V - VENT TO ATMOSPHERE
F O - FAIL OPEN
F C - FAIL CLOSED
T - TRIP ON CONTAINMENT ISOLATION SIGN
V H - VENT HEADER
D - LOCAL DRAIN

△ CONTAINMENT PENETRATION
⬡ SEISMIC CLASSIFICATION

NOTE:
ALL PIPING ON THIS DWG. IS SEISMIC CLASS I EXCEPT AS NOTED.

REDRAWN FROM (W) DWG. 605J413

DWN/CHK'D	INDIAN POINT NO.3 NUCLEAR POWER PLANT
DES SUPV	
DISCIPLINE ENG	FLOW DIAGRAM REACTOR COOLANT SYSTEM SHEET NO. 2
DISCIPLINE DIR	
PROJ APPROVAL	
DATE	

REV	DATE	DESCRIPTION	DR	IR	PA	PRO	MGR
41	DWN	AS BUILT PER DCP 00-3-010 RC					

REVISIONS

Entergy Nuclear Northeast

SCALE NONE
DWG NO 9321-F-27473
REV 41
SHEET
TYPE A/ISI/FSAR

THIS IS A COMPUTER AIDED DESIGN DRAWING. A RECORD OF THE REVISIONS OF THIS DOCUMENT WITH APPROVAL INITIALS/SIGNATURES. IS MAINTAINED IN THE FILES OF ENTERGY NUCLEAR NORTHEAST.

SYSTEM INTENDED FUNCTION BOUNDARY

COMPONENTS SUBJECT TO AMR

- CONTAINMENT ISOLATION SYSTEM (HPC, IVSW, WCPS & WCCPP) AMM-02
- PRIMARY MAKEUP WATER SYSTEM AMM-06
- CONTAINMENT PENETRATIONS AMM-26
- REACTOR COOLANT SYSTEM AMM-33

NO.	DATE	DESCRIPTION	BY	ENG	CHK	APP
0	1-19-07					

REVISIONS

LRA-9321-27473-0

CAD FILE LRA-9321-27473_41.DGN
MASTER FILE 9321-27473_41.CAL

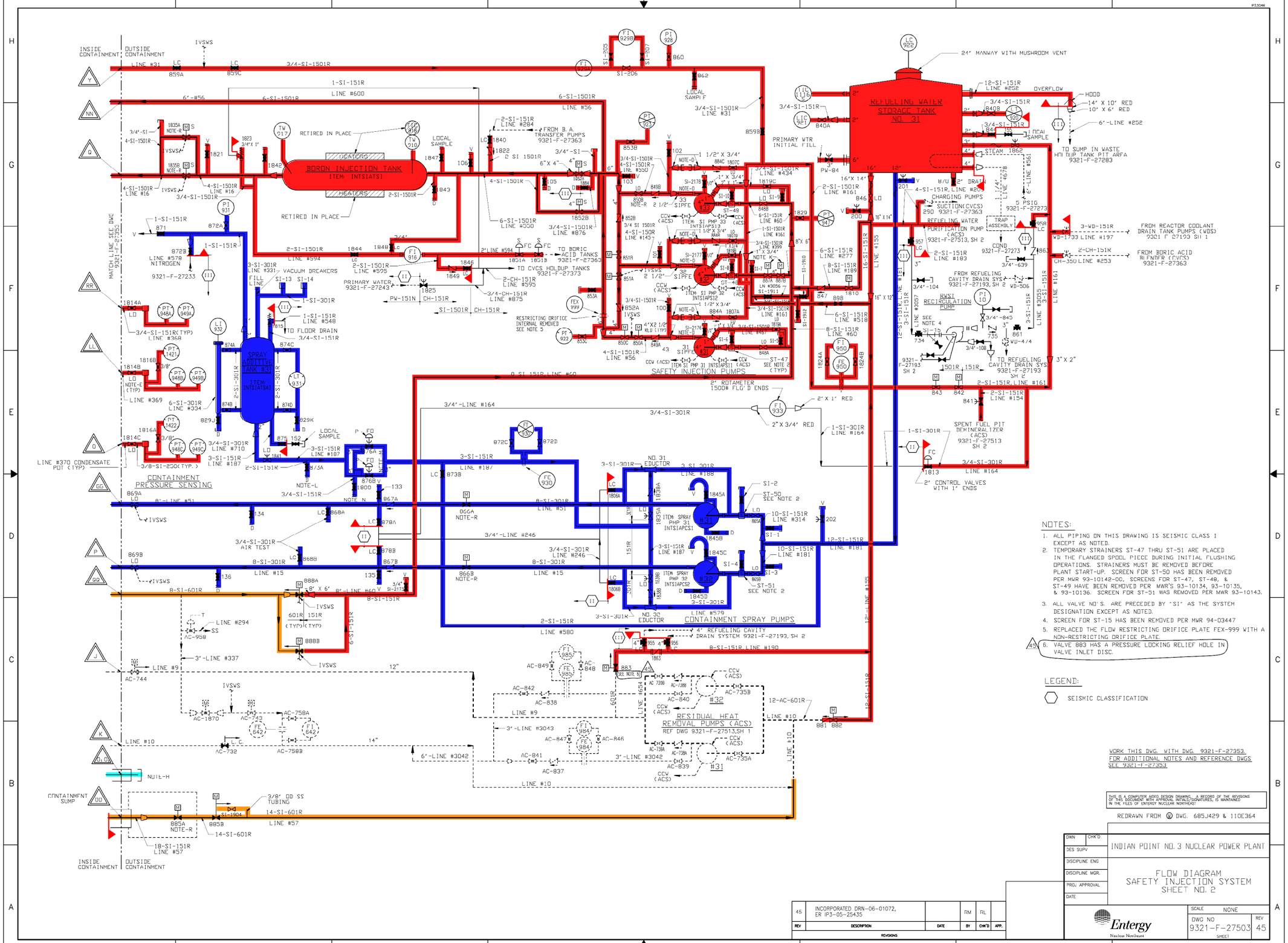
INSIDE CONTAINMENT
OUTSIDE CONTAINMENT
BORON INJECTION TANK
ITEM: INTSIATSI
HEATERS
RETIRED IN PLACE
REFUELING WATER STORAGE TANK NO. 31
24" MANWAY WITH MUSHROOM VENT
SPRAY ADDITIVE TANK H31
ITEM: INTSIATSA
CONTAINMENT PRESSURE SENSING
SAFETY INJECTION PUMPS
CONTAINMENT SPRAY PUMPS
RESIDUAL HEAT REMOVAL PUMPS (ACS)
REF DWG 9321-F-27513,SH 1
CHARGING PUMPS SUCTION(CVCS) 290 9321-F-27363
REFUELING WATER PURIFICATION PUMP (ACS) 9321-F-27513, SH 2
RWST RECIRCULATION PUMP
SPENT FUEL PIT DEMINERALIZER (ACS) 9321-F-27513 SH 2
TO REFUELING CAVITY DRAIN SYS 9321-F-27193
FROM REFUELING CAVITY DRAIN SYS 9321-F-27193, SH 2
FROM REACTOR COOLANT DRAIN TANK PUMPS (WDS) 9321-F-27193 SH 1
FROM BORIC ACID RECEIVER (CVCS) 9321-F-27363
TO SUMP IN WASTE HOLDUP TANK PIT AREA 9321-F-27283
TO BORIC ACID TANKS 9321-F-27363
TO CVCS HOLDUP TANKS 9321-F-27373
FROM B. A. TRANSFER PUMPS 9321-F-27363
MATCH LINE SEE DWG 9321-F-27352
CONTAINMENT SPRAY PUMPS
NOTES:
1. ALL PIPING ON THIS DRAWING IS SEISMIC CLASS I EXCEPT AS NOTED.
2. TEMPORARY STRAINERS ST-47 THRU ST-51 ARE PLACED IN THE FLANGED SPOOL PIECE DURING INITIAL FLUSHING OPERATIONS. STRAINERS MUST BE REMOVED BEFORE PLANT START-UP. SCREEN FOR ST-50 HAS BEEN REMOVED PER MWR 93-10142-00, SCREENS FOR ST-47, ST-48, & ST-49 HAVE BEEN REMOVED PER MWR'S 93-10134, 93-10135, & 93-10136. SCREEN FOR ST-51 WAS REMOVED PER MWR 93-10143.
3. ALL VALVE NO'S. ARE PRECEDED BY "SI" AS THE SYSTEM DESIGNATION EXCEPT AS NOTED.
4. SCREEN FOR ST-15 HAS BEEN REMOVED PER MWR 94-03447
5. REPLACED THE FLOW RESTRICTING ORIFICE PLATE FEX-999 WITH A NON-RESTRICTING ORIFICE PLATE.
6. VALVE 883 HAS A PRESSURE LOCKING RELIEF HOLE IN VALVE INLET DISC.
LEGEND:
SEISMIC CLASSIFICATION
SYSTEM INTENDED FUNCTION BOUNDARY
COMPONENTS SUBJECT TO AMR
CONTAINMENT SPRAY SYSTEM AMM-01
SAFETY INJECTION SYSTEM AMM-03
RESIDUAL HEAT REMOVAL AMM-05
CONTAINMENT PENETRATIONS AMM-26
WORK THIS DWG. WITH DWG. 9321-F-27353. FOR ADDITIONAL NOTES AND REFERENCE DWGS. SEE 9321-F-27353.
THIS IS A COMPUTER AIDED DESIGN DRAWING. A RECORD OF THE REVISIONS OF THIS DOCUMENT WITH APPROVAL INITIALS/SIGNATURES, IS MAINTAINED IN THE FILES OF ENTERGY NUCLEAR NORTHEAST.
REDRAWN FROM DWG. 685J429 & 110E364
INDIAN POINT NO. 3 NUCLEAR POWER PLANT
FLOW DIAGRAM SAFETY INJECTION SYSTEM SHEET NO. 2
Entergy Nuclear Northeast
SCALE NONE
DWG NO 9321-F-27503
REV 45
SHEET
TYPE A/ISI/FSAR
REVISIONS
45 INCORPORATED DRN-06-01072, ER IP3-05-25435 RM RL
REV DESCRIPTION DATE BY CHK'D APP.
0 1-19-07 DESCRIPTION BY ENG CHK APP
LRA-9321-27503-0
CAD FILE LRA-9321-27503_45.DGN
RASTER FILE 9321-27503_45.CAL

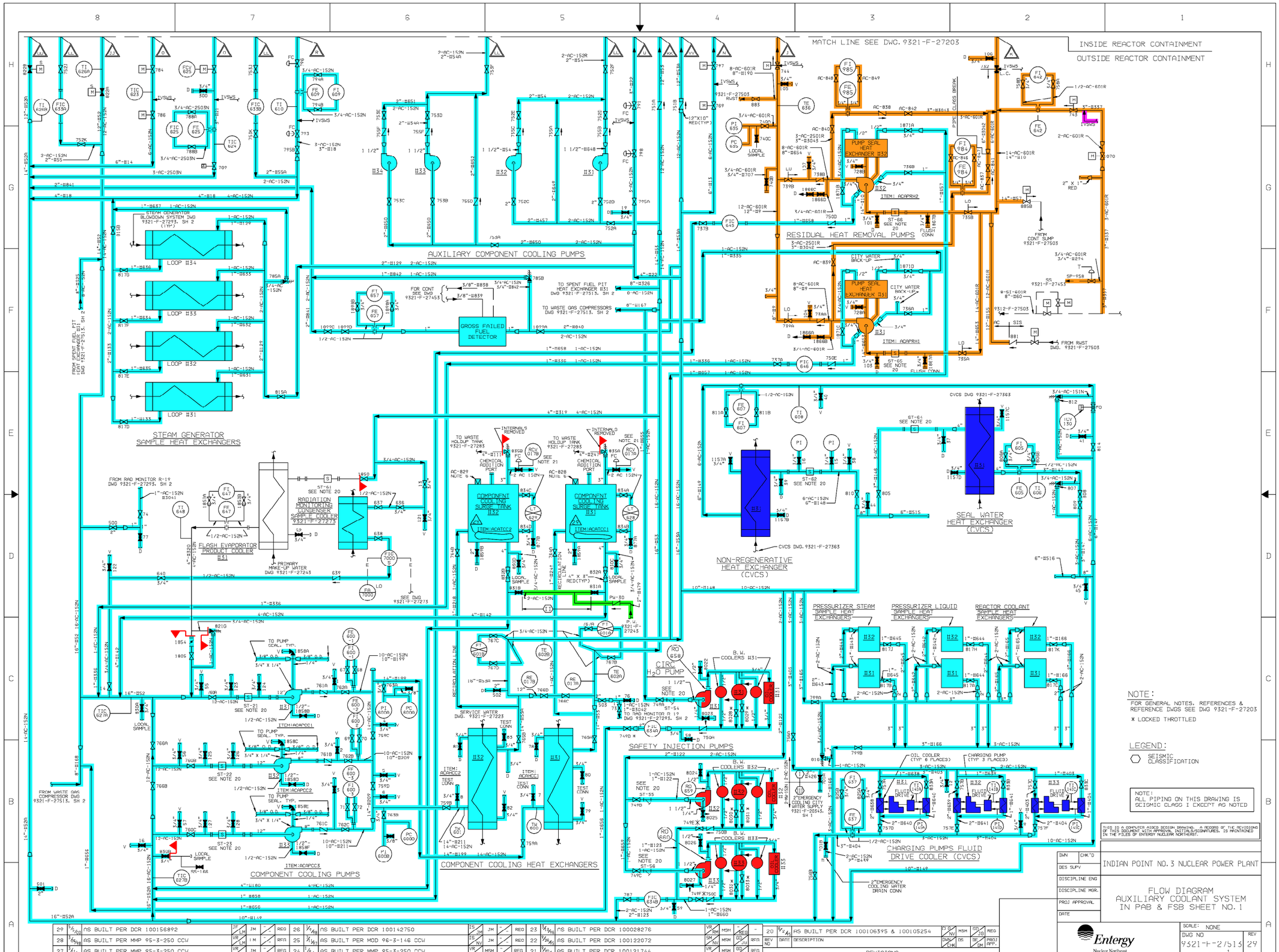
MATCH LINE SEE DWG. 9321-F-27203
INSIDE REACTOR CONTAINMENT
OUTSIDE REACTOR CONTAINMENT
AUXILIARY COMPONENT COOLING PUMPS
RESIDUAL HEAT REMOVAL PUMPS
PUMP SEAL HEAT EXCHANGER H32
PUMP SEAL HEAT EXCHANGER H31
STEAM GENERATOR SAMPLE HEAT EXCHANGERS
LOOP H34
LOOP H33
LOOP H32
LOOP H31
GROSS FAILED FUEL DETECTOR
FLASH EVAPORATOR PRODUCT COOLER H31
RADIATION MONITORING CONDENSER SAMPLE COOLER 9321-F-27273
COMPONENT COOLING SURGE TANK H32
COMPONENT COOLING SURGE TANK H31
NON-REGENERATIVE HEAT EXCHANGER (CVCS)
SEAL WATER HEAT EXCHANGER (CVCS)
PRESSURIZER STEAM SAMPLE HEAT EXCHANGERS
PRESSURIZER LIQUID SAMPLE HEAT EXCHANGERS
REACTOR COOLANT SAMPLE HEAT EXCHANGERS
CIRC. H2O PUMP
SAFETY INJECTION PUMPS
COMPONENT COOLING PUMPS
COMPONENT COOLING HEAT EXCHANGERS
CHARGING PUMPS FLUID DRIVE COOLER (CVCS)
SYSTEM INTENDED FUNCTION BOUNDARY
NOTE:
FOR GENERAL NOTES, REFERENCES & REFERENCE DWGS SEE DWG 9321-F-27203
* LOCKED THROTTLED
LEGEND:
SEISMIC CLASSIFICATION
NOTE:
ALL PIPING ON THIS DRAWING IS SEISMIC CLASS I EXCEPT AS NOTED
COMPONENTS SUBJECT TO AMR
CONTAINMENT ISOLATION SYSTEM (HPC, IVSW, WCPS & WCCPP) AMM-02
SAFETY INJECTION SYSTEM AMM-03
RESIDUAL HEAT REMOVAL AMM-05
PRIMARY MAKEUP WATER SYSTEM AMM-06
CHEMICAL AND VOLUME CONTROL SYSTEM AMM-07
COMPONENT COOLING WATER SYSTEM AMM-13
INDIAN POINT NO. 3 NUCLEAR POWER PLANT
FLOW DIAGRAM
AUXILIARY COOLANT SYSTEM
IN PAB & FSB SHEET NO. 1
Entergy
Nuclear Northeast
SCALE: NONE
DWG NO 9321-F-27513
REV 29
SHEET 1
REVISIONS
LRA-9321-27513-001-0
CAD FILE LRA-9321-27513-001_29.DGN
MASTER FILE 9321-27513-001_29.CAL
29 1/6/00 AS BUILT PER DCR 100156892
28 1/26/98 AS BUILT PER MMP 95-3-250 CCW
27 1/1/98 AS BUILT PER MMP 95-3-250 CCW
26 7/1/98 AS BUILT PER DCR 100142750
25 7/26/93 AS BUILT PER DCR 100122072
24 1/1/97 AS BUILT PER MMP 95-3-250 CCW
23 11/16/98 AS BUILT PER DCR 100028276
22 9/20/93 AS BUILT PER DCR 100121744
20 9/4/02 AS BUILT PER DCR 100106395 & 100105254
REVISIONING

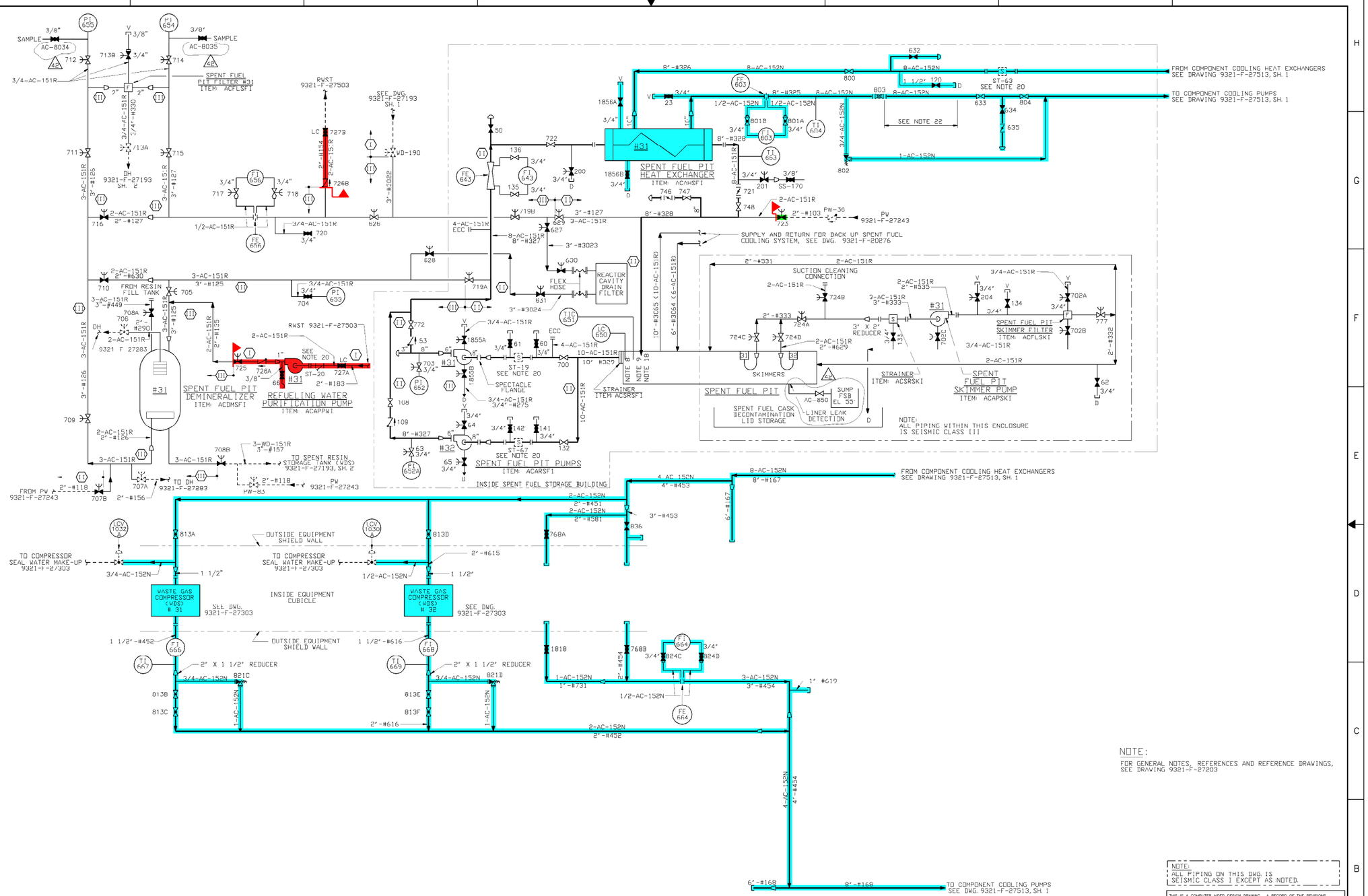

NOTE:
FOR GENERAL NOTES, REFERENCES AND REFERENCE DRAWINGS, SEE DRAWING 9321-F-27203

NOTE:
ALL PIPING ON THIS DWG. IS SEISMIC CLASS I EXCEPT AS NOTED.

THIS IS A COMPUTER AIDED DESIGN DRAWING. A RECORD OF THE REVISIONS OF THIS DOCUMENT WITH APPROVAL INITIALS/SIGNATURES, IS MAINTAINED IN THE FILES OF ENTERGY NUCLEAR NORTHEAST

REV NO	DATE	DESCRIPTION	DRN/CHK	D3	DS/DM	PROJ APP.
42	5/1/02	AS BUILT PER DCRS 100163953 & 100163955	JF/VR	JM	RSS	REG
41	1/4/01	AS BUILT PER DCR 100159759	JF/VR	JM	LJS/SWT	REG
40	7/19/00	AS BUILT PER MOD. 97-3-126	VR/JF	JM	/	REG
39	5/19/00	AS BUILT PER DCR 100157197	JF/JM	JM	/	REG
38	8/22/98	AS BUILT PER MOD 98-3-019	VR/JF	JM	/	FR
37	8/3/98	AS BUILT PER DCR 100152730	VR/JM	JM	/	REG
36	5/19/98	AS BUILT PER DCR 100152112	DM/RS	JM	/	REG
35	1/14/98	AS BUILT PER DCR 100145797	VR/JM	JM	/	REG
34	5/21/92	AS BUILT PER DCR 100145452	VR/JM	JM	/	REG

REVISIONS

DWN | CHK'D
DES SUPV
DISCIPLINE ENG
DISCIPLINE MGR.
PROJ APPROVAL
DATE

INDIAN POINT NO. 3 NUCLEAR POWER PLANT

FLOW DIAGRAM
AUXILIARY COOLANT SYSTEM
IN PAB & FSB SHEET NO. 2

Entergy
Nuclear Northeast

SCALE: NONE
DWG NO 9321-F-27513
REV 42
SHEET 2

SYSTEM INTENDED FUNCTION BOUNDARY

COMPONENTS SUBJECT TO AMR

SAFETY INJECTION SYSTEM AMM-03

PRIMARY MAKEUP WATER SYSTEM AMM-06

COMPONENT COOLING WATER SYSTEM AMM-13

NO.	DATE	DESCRIPTION	BY	ENG	CHK	APP
0	11-2-06		-	-	-	-

REVISIONS

LRA-9321-27513-002-0

CAD FILE LRA-9321-27513-002_42.DGN
RASTER FILE 9321-27513-002_42.CAL

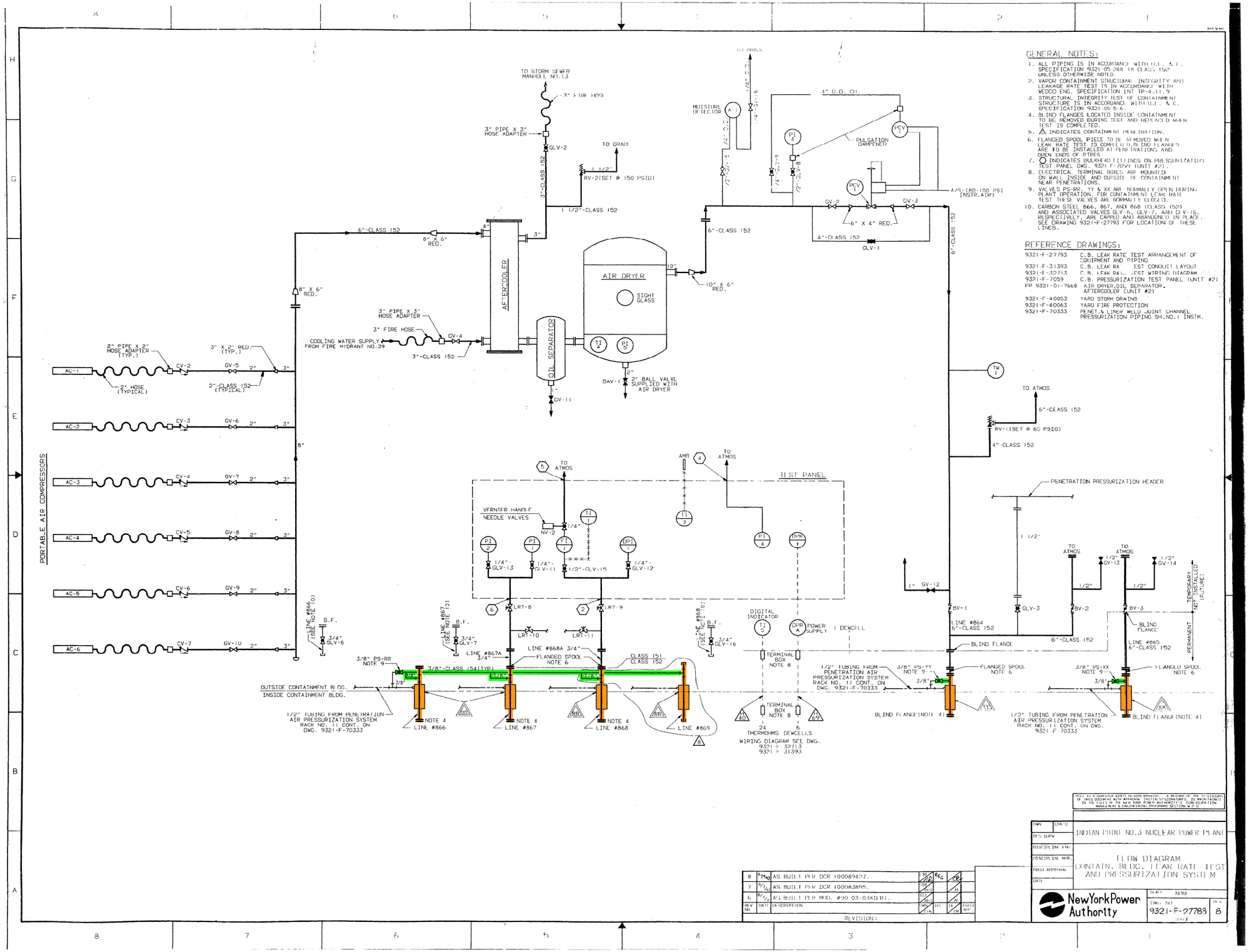

GENERAL NOTES:

1. ALL PIPING IS IN ACCORDANCE WITH U.L. & F. SPECIFICATION 9321-05-248 IR CLASS 152 UNLESS OTHERWISE NOTED.
2. VAPOR CONTAINMENT STRUCTURAL INTEGRITY AND LEAKAGE RATE TEST IS IN ACCORDANCE WITH WEDCO ENG. SPECIFICATION INT TP-4.11.9
3. STRUCTURAL INTEGRITY TEST OF CONTAINMENT STRUCTURE IS IN ACCORDANCE WITH U.L. & C. SPECIFICATION 9321-05-5-6.
4. BLIND FLANGES LOCATED INSIDE CONTAINMENT TO BE REMOVED DURING TEST AND REPLACED WHEN TEST IS COMPLETED.
5. △ INDICATES CONTAINMENT PENETRATION.
6. FLANGED SPOOL PIECE TO BE REMOVED WHEN LEAK RATE TEST IS COMPLETED. BLIND FLANGES ARE TO BE INSTALLED AT PENETRATIONS AND OPEN ENDS OF PIPES.
7. ○ INDICATES BULKHEAD FITTINGS ON PRESSURIZATION TEST PANEL DWG. 9321-F-70749 (UNIT #2).
8. ELECTRICAL TERMINAL BOXES ARE MOUNTED ON WALL INSIDE AND OUTSIDE OF CONTAINMENT NEAR PENETRATIONS.
9. VALVES PS-RR, YY & XX ARE NORMALLY OPEN DURING PLANT OPERATION. FOR CONTAINMENT LEAK RATE TEST THESE VALVES ARE NORMALLY CLOSED.
10. CARBON STEEL 866, 867, AND 868 (CLASS 152) AND ASSOCIATED VALVES GLV-6, GLV-7, AND GLV-16, RESPECTIVLY, ARE CAPPED AND ABANDONED IN PLACE. SEE DRAWING 9321-F-27793 FOR LOCATION OF THESE LINES.

REFERENCE DRAWINGS:

9321-F-27793	C.B. LEAK RATE TEST ARRANGEMENT OF EQUIPMENT AND PIPING
9321-F-31393	C.B. LEAK RATE TEST CONDUIT LAYOUT
9321-F-32713	C.B. LEAK RATE TEST WIRING DIAGRAM
9321-F-70749	C.B. PRESSURIZATION TEST PANEL (UNIT #2)
FP 9321-01-7668	AIR DRYER,OIL SEPARATOR, AFTERCOOLER (UNIT #2)
9321-F-40053	YARD STORM DRAINS
9321-F-40063	YARD FIRE PROTECTION
9321-F-70333	PENET.& LINER WELD JOINT CHANNEL PRESSURIZATION PIPING SH.NO.1 INSTM.

COMPONENTS SUBJECT TO AMR

- CONTAINMENT ISOLATION SYSTEM (HPC, IVSW, WCPS & WCCPP) AMM-02
- CONTAINMENT PENETRATIONS AMM-26

REV NO	DATE	DESCRIPTION	BY	ENG	CHK	APP
8	8/26/03	AS BUILT PER DCR 100089427.				
7	5/1/98	AS BUILT PER DCR 100048895.				
6	8/1/95	AS BUILT PER MOD. #90-03-0381R1.				

REVISIONS

THIS IS A COMPUTER GENERATED DRAWING. A RECORD OF THE REVISION OF THIS DOCUMENT WITH APPROVAL INITIALS/SIGNATURES, IS MAINTAINED IN THE FILES OF THE NEW YORK POWER AUTHORITY'S CONFIGURATION MANAGEMENT & ENGINEERING PROGRAMS SECTION N.P.D.

DWN | CHK'D
DES SUPV
DISCIPLINE ENG.
DISCIPLINE MGR.
PROJ APPROVAL
DATE

INDIAN POINT NO.3 NUCLEAR POWER PLANT

FLOW DIAGRAM
CONTAIN. BLDG. LEAK RATE TEST AND PRESSURIZATION SYSTEM

NewYorkPower Authority

SCALE NONE
DWG NO 9321-F-27783
REV 8

NO.	DATE	DESCRIPTION	BY	ENG	CHK	APP
0	8-2-06					

REVISIONS

LRA-9321-27783-0

CAD FILE LRA-9321-27783_08.DGN
MASTER FILE 9321-27783_08.CAL

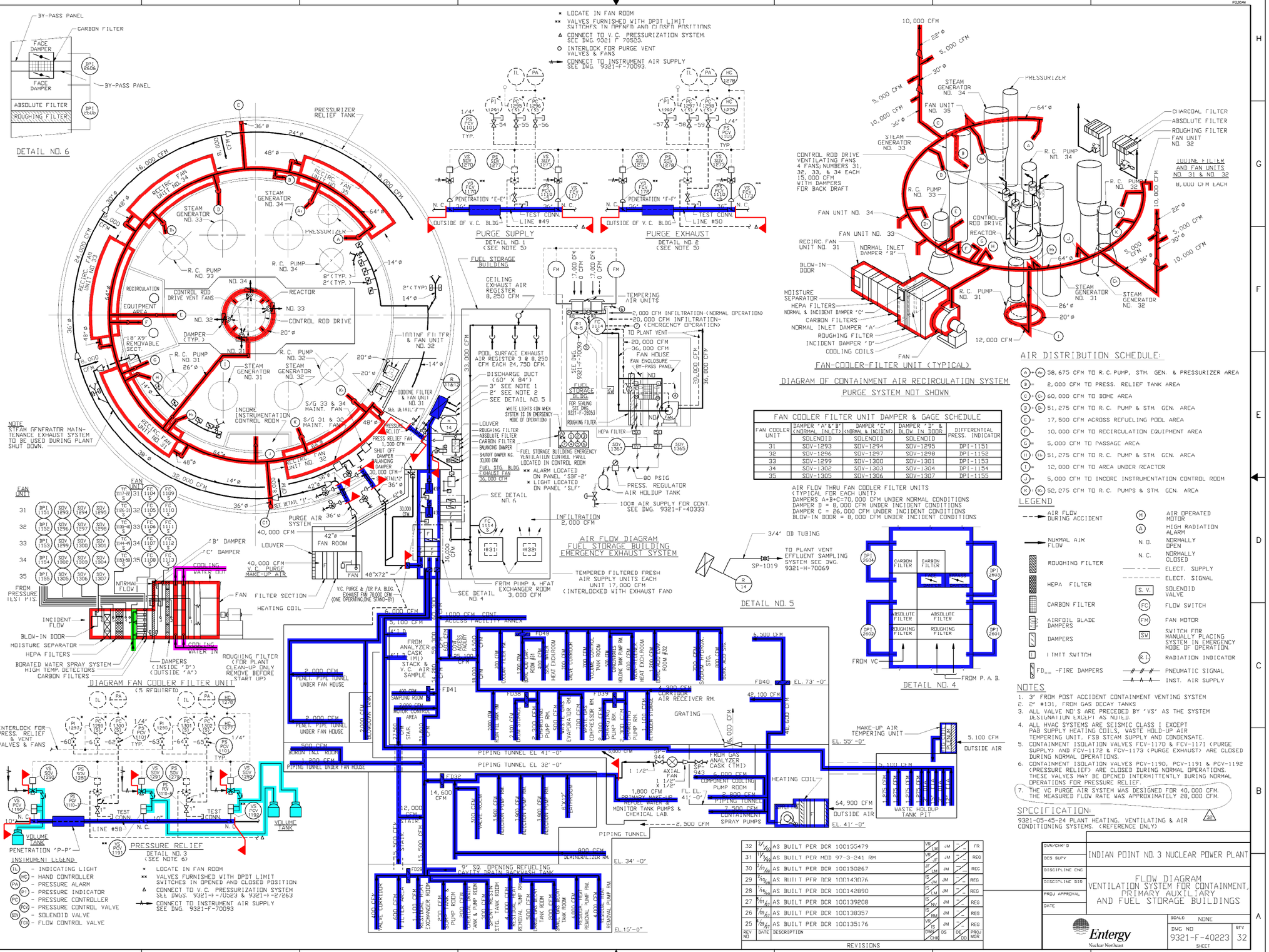
DETAIL NO. 6
BY-PASS PANEL
CARBON FILTER
FACE DAMPER
ABSOLUTE FILTER
ROUGHING FILTER
PRESSURIZER RELIEF TANK
RECIRC. FAN UNIT NO. 34
RECIRC. FAN UNIT NO. 33
RECIRC. FAN UNIT NO. 32
RECIRC. FAN UNIT NO. 31
STEAM GENERATOR NO. 34
STEAM GENERATOR NO. 33
PRESSURIZER
R. C. PUMP NO. 34
R. C. PUMP NO. 33
R. C. PUMP NO. 32
R. C. PUMP NO. 31
STEAM GENERATOR NO. 31
STEAM GENERATOR NO. 32
CONTROL ROD DRIVE VENT FANS
REACTOR
CONTROL ROD DRIVE
RECIRCULATION EQUIPMENT AREA
DAMPER (TYP.)
18'X9' REMOVABLE SECT.
IODINE FILTER & FAN UNIT NO. 32
IODINE FILTER & FAN UNIT NO. 31
INCORE INSTRUMENTATION CONTROL ROOM
S/G 33 & 34 MAINT. FAN
S/G 31 & 32 MAINT. FAN
PRESS. RELIEF FAN 1,500 CFM
SHUT OFF DAMPER
BALANCING DAMPER
PURGE AIR SYSTEM
40,000 CFM
LOUVER
FAN ROOM
40,000 CFM V.C. PURGE MAKE-UP AIR
V.C. PURGE & DR PA BLDG. EXHAUST FAN 70,000 CFM (ONE OPERATING,ONE STAND-BY)
B' DAMPER
C' DAMPER
COOLING WATER OUT
NORMAL FLOW
FAN
FILTER SECTION
HEATING COIL
FROM PRESSURE TEST PTS.
INCIDENT FLOW
BLOW-IN DOOR
MOISTURE SEPARATOR
HEPA FILTERS
BORATED WATER SPRAY SYSTEM
HIGH TEMP. DETECTORS
CARBON FILTERS
DAMPERS (INSIDE 'D') (OUTSIDE 'A')
ROUGHING FILTER (FOR PLANT CLEAN-UP ONLY REMOVE BEFORE START UP)
COOLING WATER IN
DIAGRAM FAN COOLER FILTER UNIT (5 REQUIRED)
NOTE
STEAM GENERATOR MAINTENANCE EXHAUST SYSTEM TO BE USED DURING PLANT SHUT DOWN.
FAN UNIT
31
32
33
34
35
PURGE SUPPLY
DETAIL NO. 1 (SEE NOTE 5)
PENETRATION 'E-E'
PENETRATION 'F-F'
TEST CONN.
LINE #49
LINE #50
OUTSIDE OF V.C. BLDG.
PURGE EXHAUST
DETAIL NO. 2 (SEE NOTE 5)
FUEL STORAGE BUILDING
CEILING EXHAUST AIR REGISTER 8,250 CFM
POOL SURFACE EXHAUST AIR REGISTER 3 @ 8,250 CFM EACH 24,750 CFM.
DISCHARGE DUCT (60" X 84")
3' SEE NOTE 1
2' SEE NOTE 2
SEE DETAIL NO. 5
WHITE LIGHTS (ON WHEN SYSTEM IS IN EMERGENCY MODE OF OPERATION)
LOUVER
ROUGHING FILTER
ABSOLUTE FILTER
CARBON FILTER
BALANCING DAMPER
SHUTOFF DAMPER N.C. 30,000 CFM
FUEL STG. BLDG. EXHAUST FAN 36,000 CFM
FUEL STORAGE BUILDING EMERGENCY VENTILATION CONTROL PANEL LOCATED IN CONTROL ROOM
ALARM LOCATED ON PANEL "SBF-2"
LIGHT LOCATED ON PANEL "SLF"
SEE DETAIL NO. 6
INFILTRATION 2,000 CFM
TEMPERING AIR UNITS
2,000 CFM INFILTRATION-(NORMAL OPERATION)
20,000 CFM INFILTRATION-(EMERGENCY OPERATION)
TO PLANT VENT
20,000 CFM
36,000 CFM
FAN HOUSE
FAN ENCLOSURE
BY-PASS PANEL
FUEL STORAGE BLDG.
FOR SEALING SEE DWG. 9321-F-29953
ROUGHING FILTER
HEPA FILTER
80 PSIG
PRESS. REGULATOR
AIR HOLDUP TANK
100# AIR SUPPLY FOR CONT. SEE DWG. 9321-F-40333
AIR FLOW DIAGRAM FUEL STORAGE BUILDING EMERGENCY EXHAUST SYSTEM
TEMPERED FILTERED FRESH AIR SUPPLY UNITS EACH UNIT 17,000 CFM (INTERLOCKED WITH EXHAUST FAN)
FROM PUMP & HEAT EXCHANGER ROOM 3,000 CFM
SEE DETAIL NO. 4
ACCESS FACILITY ANNEX
PIPING TUNNEL EL 41'-0"
PIPING TUNNEL EL 32'-0"
PIPING TUNNEL
PRESSURE RELIEF
DETAIL NO. 3 (SEE NOTE 6)
INTERLOCK FOR PRESS. RELIEF & VENT VALVES & FANS
VOLUME TANK
PENETRATION 'P-P'
INSTRUMENT LEGEND:
TL - INDICATING LIGHT
HC - HAND CONTROLLER
PA - PRESSURE ALARM
PI - PRESSURE INDICATOR
PC - PRESSURE CONTROLLER
PCV - PRESSURE CONTROL VALVE
SOV - SOLENOID VALVE
FCV - FLOW CONTROL VALVE
* LOCATE IN FAN ROOM
** VALVES FURNISHED WITH DPDT LIMIT SWITCHES IN OPENED AND CLOSED POSITION
Δ CONNECT TO V.C. PRESSURIZATION SYSTEM SEE DWGS. 9321-F-70523 & 9321-F-72763
CONNECT TO INSTRUMENT AIR SUPPLY SEE DWG. 9321-F-70093
FAN-COOLER-FILTER UNIT (TYPICAL)
DIAGRAM OF CONTAINMENT AIR RECIRCULATION SYSTEM
PURGE SYSTEM NOT SHOWN
CONTROL ROD DRIVE VENTILATING FANS 4 FANS; NUMBERS 31, 32, 33, & 34 EACH 15,000 CFM WITH DAMPERS FOR BACK DRAFT
CHARCOAL FILTER
ABSOLUTE FILTER
ROUGHING FILTER
FAN UNIT NO. 32
IODINE FILTER AND FAN UNITS NO. 31 & NO. 32
8,000 CFM EACH
FAN UNIT NO. 34
FAN UNIT NO. 33
RECIRC. FAN UNIT NO. 31
NORMAL INLET DAMPER 'B'
BLOW-IN DOOR
MOISTURE SEPARATOR
HEPA FILTERS
NORMAL & INCIDENT DAMPER 'C'
CARBON FILTERS
NORMAL INLET DAMPER 'A'
ROUGHING FILTER
INCIDENT DAMPER 'D'
COOLING COILS
FAN
12,000 CFM
AIR DISTRIBUTION SCHEDULE:
(A)+(A1) 58,675 CFM TO R.C.PUMP, STM. GEN. & PRESSURIZER AREA
(B) = 2,000 CFM TO PRESS. RELIEF TANK AREA
(C)+(C1) 60,000 CFM TO DOME AREA
(D)+(D1) 51,275 CFM TO R.C. PUMP & STM. GEN. AREA
(E) = 17,500 CFM ACROSS REFUELING POOL AREA
(F) = 10,000 CFM TO RECIRCULATION EQUIPMENT AREA
(G) = 5,000 CFM TO PASSAGE AREA
(H)+(H1) 51,275 CFM TO R.C. PUMP & STM. GEN. AREA
(I) = 12,000 CFM TO AREA UNDER REACTOR
(J) = 5,000 CFM TO INCORE INSTRUMENTATION CONTROL ROOM
(K)+(K1) 52,275 CFM TO R.C. PUMPS & STM. GEN. AREA
LEGEND
AIR FLOW DURING ACCIDENT
NORMAL AIR FLOW
ROUGHING FILTER
HEPA FILTER
CARBON FILTER
AIRFOIL BLADE DAMPERS
DAMPERS
LIMIT SWITCH
FD__ -FIRE DAMPERS
AIR OPERATED MOTOR
HIGH RADIATION ALARM
N. O. NORMALLY OPEN
N. C. NORMALLY CLOSED
ELECT. SUPPLY
ELECT. SIGNAL
S. V. SOLENOID VALVE
FC FLOW SWITCH
FM FAN MOTOR
SW SWITCH FOR MANUALLY PLACING SYSTEM IN EMERGENCY MODE OF OPERATION.
R.I. RADIATION INDICATOR
PNEUMATIC SIGNAL
INST. AIR SUPPLY
NOTES
1. 3" FROM POST ACCIDENT CONTAINMENT VENTING SYSTEM
2. 2" #131, FROM GAS DECAY TANKS
3. ALL VALVE NO'S ARE PRECEDED BY 'VS' AS THE SYSTEM DESIGNATION EXCEPT AS NOTED.
4. ALL HVAC SYSTEMS ARE SEISMIC CLASS I EXCEPT PAB SUPPLY HEATING COILS, WASTE HOLD-UP AIR TEMPERING UNIT, FSB STEAM SUPPLY AND CONDENSATE.
5. CONTAINMENT ISOLATION VALVES FCV-1170 & FCV-1171 (PURGE SUPPLY) AND FCV-1172 & FCV-1173 (PURGE EXHAUST) ARE CLOSED DURING NORMAL OPERATIONS.
6. CONTAINMENT ISOLATION VALVES PCV-1190, PCV-1191 & PCV-1192 (PRESSURE RELIEF) ARE CLOSED DURING NORMAL OPERATIONS. THESE VALVES MAY BE OPENED INTERMITTENTLY DURING NORMAL OPERATIONS FOR PRESSURE RELIEF.
7. THE VC PURGE AIR SYSTEM WAS DESIGNED FOR 40,000 CFM. THE MEASURED FLOW RATE WAS APPROXIMATELY 28,000 CFM.
SPECIFICATION:
9321-05-45-24 PLANT HEATING, VENTILATING & AIR CONDITIONING SYSTEMS. (REFERENCE ONLY)
3/4" OD TUBING
TO PLANT VENT EFFLUENT SAMPLING SYSTEM SEE DWG. 9321-H-70069
SP-1019
DETAIL NO. 5
CARBON FILTER
ABSOLUTE FILTER
ROUGHING FILTER
FROM VC
FROM P. A. B.
DETAIL NO. 4
MAKE-UP AIR TEMPERING UNIT
5,100 CFM
OUTSIDE AIR
WASTE HOLDUP TANK PIT
64,900 CFM
HEATING COIL
SPRAY PUMPS
REFUEL WATER & MONITOR TANK PUMPS & CHEMICAL LAB
2,500 CFM
DEMINERALIZER RM.
9" SQ. OPENING REFUELING CAVITY DRAIN BACKWASH TANK
EL. 34'-0"
EL. 15'-0"
GRATING
AIR RECEIVER RM.
COMPONENT COOLING PUMP ROOM
PIPING TUNNEL
SYSTEM INTENDED FUNCTION BOUNDARY
COMPONENTS SUBJECT TO AMR
CONTAINMENT SPRAY SYSTEM AMM-01
SERVICE WATER SYSTEMS AMM-12
COMPRESSED AIR SYSTEMS AMM-14
HEATING, VENTILATION AND AIR CONDITIONING SYSTEMS AMM-15
CONTAINMENT COOLING AND FILTRATION SYSTEMS AMM-28
REVISIONS
32 2/7/00 AS BUILT PER DCR 100155479
31 11/7/98 AS BUILT PER MOD 97-3-241 RM
30 1/5/98 AS BUILT PER DCR 100150267
29 5/13/96 AS BUILT PER DCR 100143076
28 1/16/96 AS BUILT PER DCR 100142890
27 8/21/92 AS BUILT PER DCR 100139208
26 7/16/92 AS BUILT PER DCR 100138357
25 7/29/92 AS BUILT PER DCR 100135176
INDIAN POINT NO. 3 NUCLEAR POWER PLANT
FLOW DIAGRAM VENTILATION SYSTEM FOR CONTAINMENT, PRIMARY AUXILIARY AND FUEL STORAGE BUILDINGS
Entergy Nuclear Northeast
SCALE: NONE
DWG NO 9321-F-40223
REV 32
TYPE A/FSAR
THIS IS A COMPUTER AIDED DESIGN DRAWING. A RECORD OF THE REVISIONS OF THIS DOCUMENT WITH APPROVAL INITIALS/SIGNATURES, IS MAINTAINED IN THE FILES OF ENTERGY NUCLEAR NORTHEAST.
0 10-19-06
LRA-9321-40223-0
CAD FILE LRA-9321-40223_32.DGN
MASTER FILE 9321-40223_32.CAL
IMECH

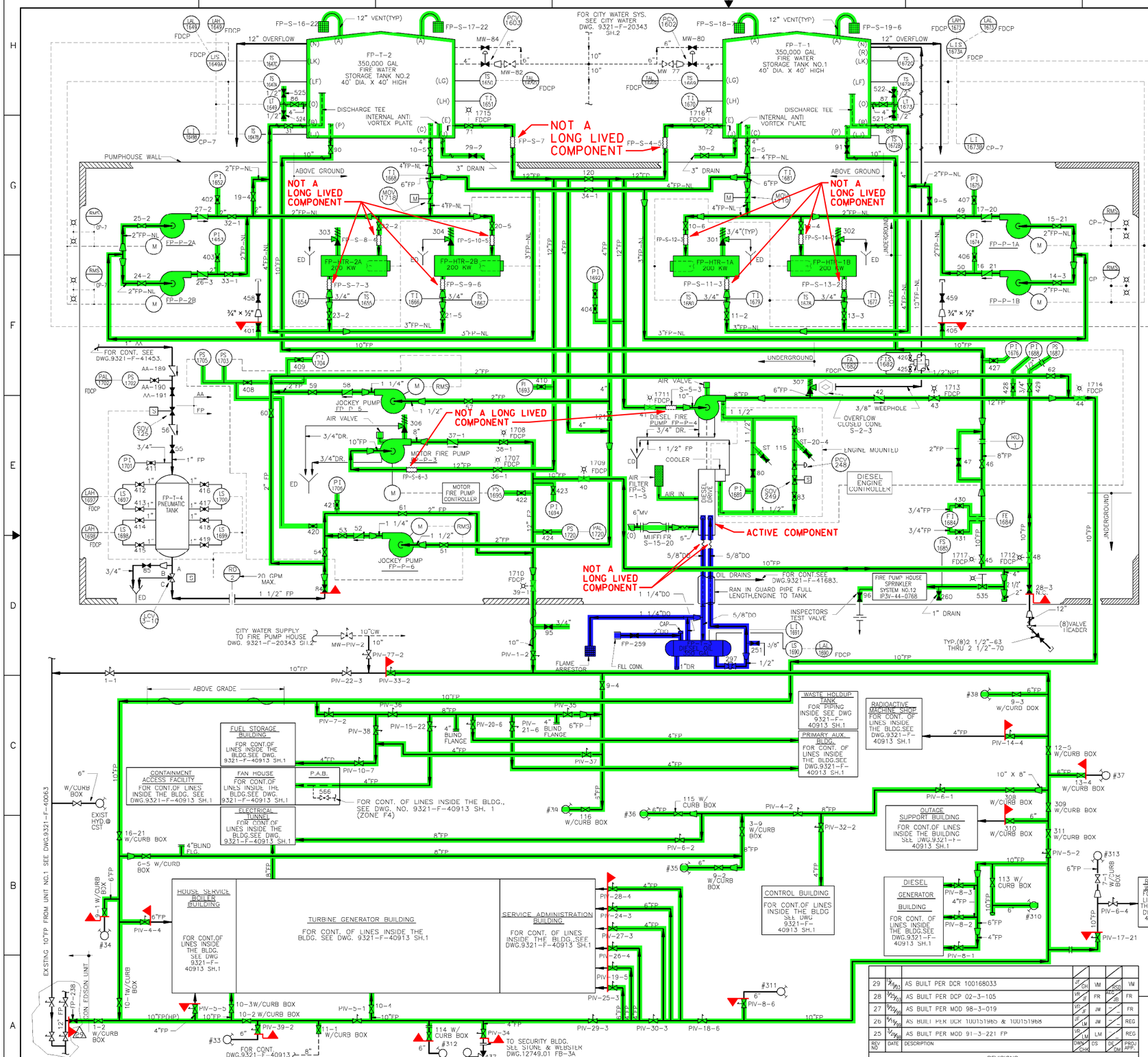

GENERAL NOTES:

1. FOR MECHANICAL SYMBOLS & ABBREVIATIONS,SEE DWG'S.9321-D-20163,9321-F-83913 & 9321-F-83923.
2. FIRE PUMP APPURTENANCES PER N.F.P.A. STANDARD 20 AND MANUFACTURERS STANDARD SIZING.
3. ALL HOOK VALVES FOR INSTRUMENTATION ARE 3/4" GLOBE.
4. ALL HOSE VALVES 2 1/2" SIZE REDUCED TO 1 1/2" HOSE AND 1 1/2" SIZE ADJUSTABLE SPRAY NOZZLES.
5. ALL INSTRUMENTATION IS SHOWN DIAGRAMMATICALLY. INSTRUMENTATION VALVES ARE NOT TAGGED OR NUMBERED.
6. ALL POSITION LIMIT SWITCHES ARE SHOWN AS FOLLOWS:
   XXXX — POSITION SWITCH NUMBER
   FDCP — LOCATION OF VALVE POSITION LIGHT (FIRE DISPLAY CONTROL PANEL IN MAIN CONTROL ROOM)
7. FIRE TANK NOZZLES ARE IDENTIFIED IN ACCORDANCE WITH FIRE PROTECTION TANK SEE DWG.IP3V-245-0002.
8. FOR REFERENCE DWGS,NOTES,AND SPECIFICATIONS, SEE DWG.9321-F-40073.
9. ALL VALVE NO'S ARE PRECEDED BY "FP" UNLESS OTHERWISE NOTED.

NOTE:

THIS DIAGRAM WAS REDRAWN FROM DWGS. 9321-F-40063 & 9321-F-40193.

WORK THIS DWG. WITH 9321-F-40913 SH.1 AND 9321-F-40913 SH.2

NOTE:
ALL PIPING ON THIS DWG.IS SEISMIC CLASS III EXCEPT AS NOTED.

SYSTEM INTENDED FUNCTION BOUNDARY

COMPONENTS SUBJECT TO AMR

FIRE PROTECTION WATER SYSTEM AMM-16

FUEL OIL SYSTEM AMM-21

REV NO.	DATE	DESCRIPTION	DRWN CHK	CS	DE DM	PROJ APP.
29	12/6/03	AS BUILT PER DCR 100168033	JF CH	VM	DCR 100168033	VM
28	3/25/03	AS BUILT PER DCP 02-3-105	VR JF	FR	JB	FR
27	9/22/98	AS BUILT PER MOD 98-3-019	VR JF	JM	—	FR
26	5/15/96	AS BUILT PER DCR 100151965 & 100151968	JF LM	JM	—	REG
25	3/1/96	AS BUILT PER MOD 91-3-221 FP	VR LM	LM	—	REG

REVISIONS

DWN | CHK'D
DES SUPV
DISCIPLINE ENG
DISCIPLINE MGR.
PROJ APPROVAL
DATE

INDIAN POINT NO. 3 NUCLEAR POWER PLANT

FLOW DIAGRAM OF PLANT
FIRE PROTECTION SYSTEM
SHEET NO. 1

Entergy
Nuclear Northeast

SCALE NONE
DWG NO 9321-F-40903
SHEET
REV 29

TYPE A/FSAR

THIS IS A COMPUTER AIDED DESIGN DRAWING. A RECORD OF THE REVISIONS OF THIS DOCUMENT WITH APPROVAL INITIALS/SIGNATURES, IS MAINTAINED IN THE FILES OF ENTERGY NUCLEAR NORTHEAST

NO.	DATE	DESCRIPTION	BY	ENG	CHK	APP
0	1-2-07					

REVISIONS

LRA-9321-40903-0

CAD FILE LRA-9321-40903_29.DGN

RASTER FILE 9321-40903_29.CAL

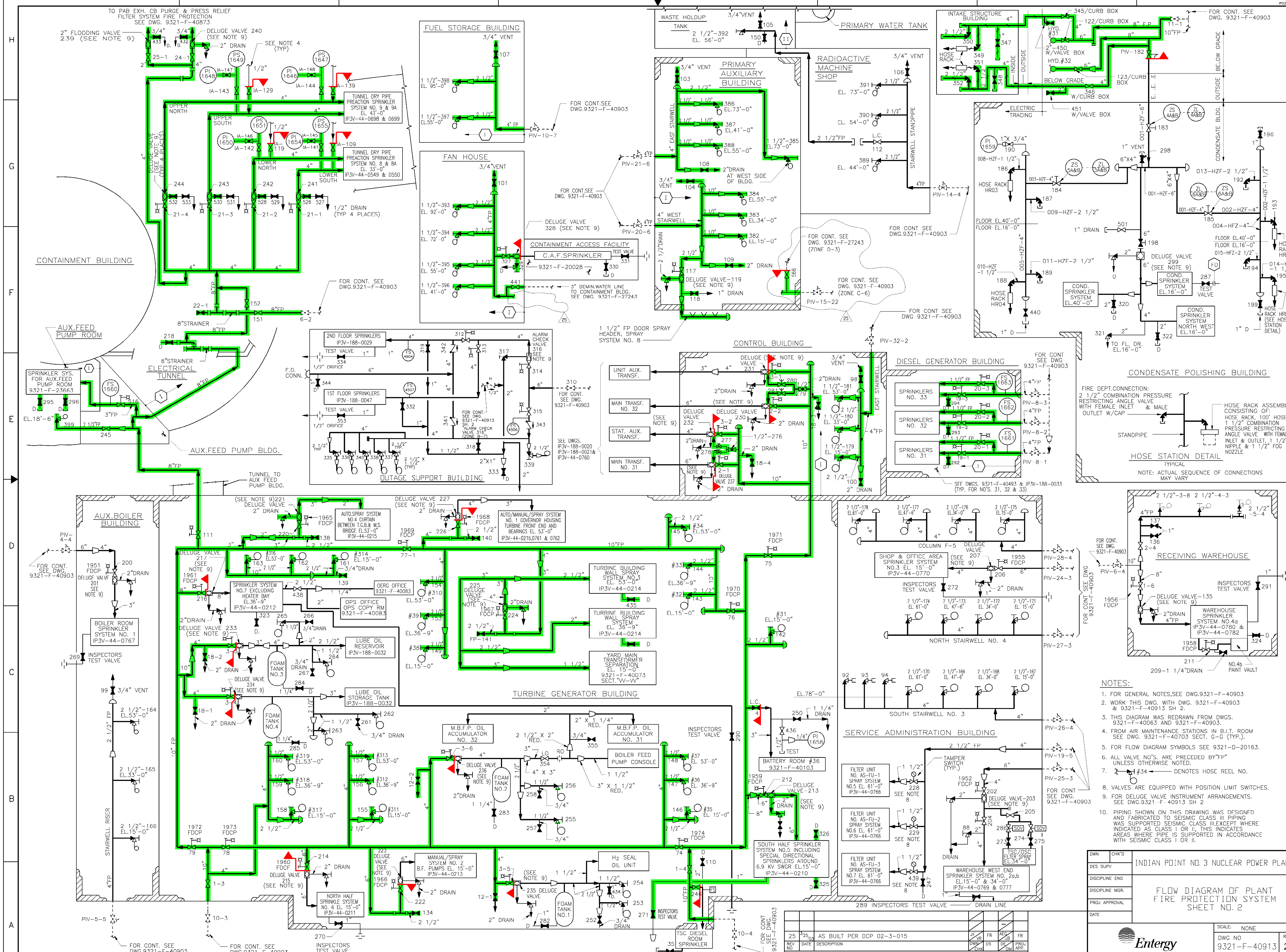

NOTES:

1. FOR GENERAL NOTES,SEE DWG.9321-F-40903
2. WORK THIS DWG. WITH DWG. 9321-F-40903 & 9321-F-40913 SH 2.
3. THIS DIAGRAM WAS REDRAWN FROM DWGS. 9321-F-40063 AND 9321-F-40903.
4. FROM AIR MAINTENANCE STATIONS IN B.I.T. ROOM SEE DWG. 9321-F-40703 SECT. G-G (TYP.).
5. FOR FLOW DIAGRAM SYMBOLS SEE 9321-D-20163.
6. ALL VALVE NO'S. ARE PRECEDED BY"FP" UNLESS OTHERWISE NOTED.
7. #34 ← DENOTES HOSE REEL NO.
8. VALVES ARE EQUIPPED WITH POSITION LIMIT SWITCHES.
9. FOR DELUGE VALVE INSTRUMENT ARRANGEMENTS. SEE DWG.9321-F-40913 SH 2
10. PIPING SHOWN ON THIS DRAWING WAS DESIGNED AND FABRICATED TO SEISMIC CLASS III PIPING WAS SUPPORTED SEISMIC CLASS III,EXCEPT WHERE INDICATED AS CLASS I OR II, THIS INDICATES AREAS WHERE PIPE IS SUPPORTED IN ACCORDANCE WITH SEISMIC CLASS I OR II.

SYSTEM INTENDED FUNCTION BOUNDARY

COMPONENTS SUBJECT TO AMR

FIRE PROTECTION WATER SYSTEM AMM-16

REV NO	DATE	DESCRIPTION	DWN	CHK	DS	DE	DM	FR	PROJ APP.
25	3/25/03	AS BUILT PER DCP 02-3-015	JF	VR	FR	AEG	JB	FR	

REVISIONS

INDIAN POINT NO. 3 NUCLEAR POWER PLANT

FLOW DIAGRAM OF PLANT FIRE PROTECTION SYSTEM SHEET NO. 2

DWN | CHK'D | DES SUPV | DISCIPLINE ENG | DISCIPLINE MGR. | PROJ APPROVAL | DATE

Entergy Nuclear Northeast

SCALE: NONE

DWG NO 9321-F-40913 REV 25 SHEET 1

TYPE A/FSAR

THIS IS A COMPUTER AIDED DESIGN DRAWING. A RECORD OF THE REVISIONS OF THIS DOCUMENT WITH APPROVAL INITIALS/SIGNATURES, IS MAINTAINED IN THE FILES OF ENTERGY NUCLEAR NORTHEAST

NO.	DATE	DESCRIPTION	BY	ENG	CHK	APP
0	1-2-07	.	.	.	.	.

REVISIONS

LRA-9321-40913-001-0

CAD FILE LRA-9321-40913-001_25.DGN

RASTER FILE 9321-40913-001_25.CAL

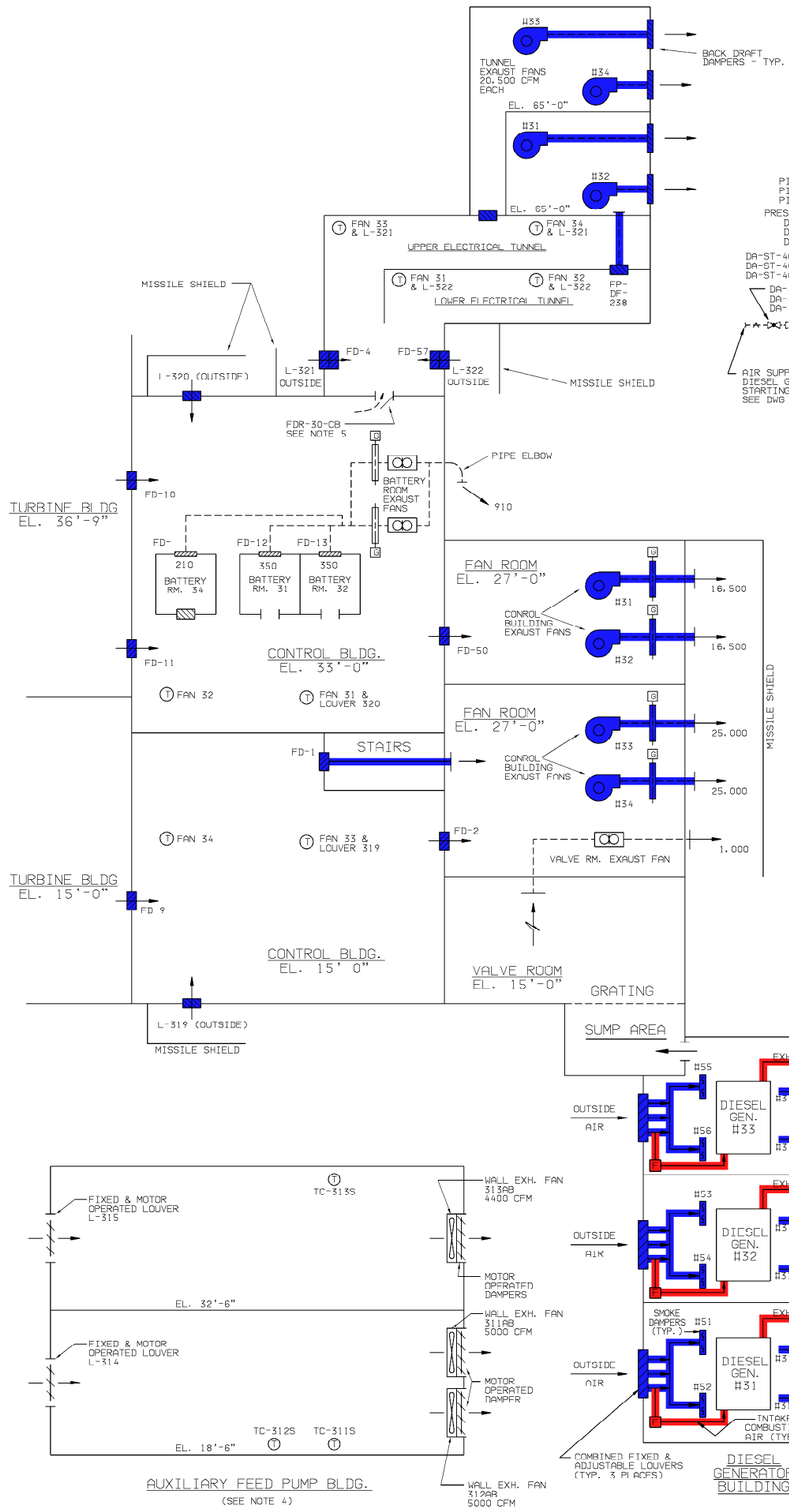

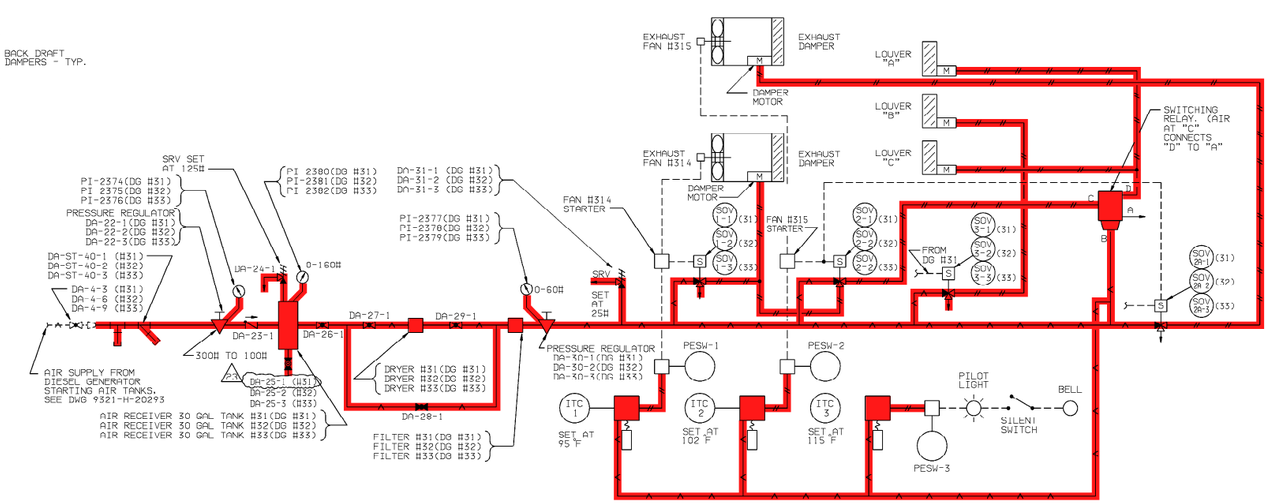

NOTE:
VALVES SUFFIXED (-1) ARE FOR DIESEL #31
DIESEL #32 VALVES ARE SUFFIXED (-2)
DIESEL #33 VALVES ARE SUFFIXED (-3)

VENTING CONTROL DIAGRAM

FOR ONE GENERATOR COMPARTMENT
THREE REQUIRED AS SHOWN

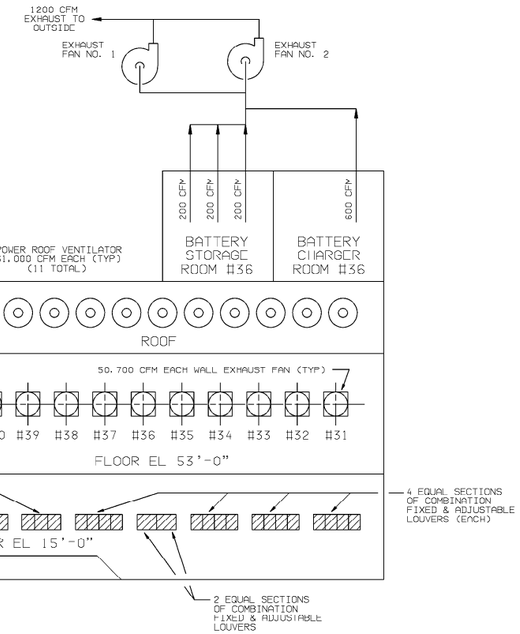

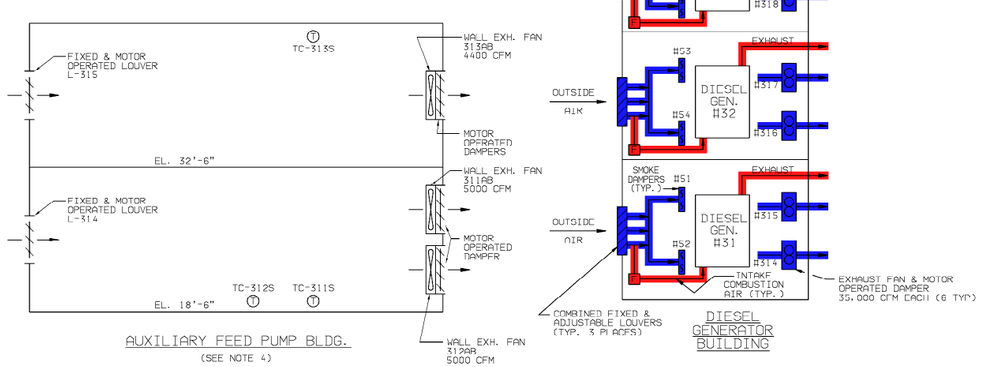

NOTES:

1. DAMPER & LOUVER MOTOR-P/N 331-2697
   I.T.C.-INDICATING TEMP. CONTROLLERS SERIES 200-P/N 163-3210
   E.P. ELECTRO-PNEUMATIC VALVES-P/N ASCO MODEL NO. NP8320A1/4E
   P.E.-PRESSURE ELECTRIC SWITCHES-P/N 134-1450.
2. PIPING IS IN ACCORDANCE WITH CLASS 151 SEAMLESS ASTM SPEC A-312 TYPE 304 SCHEDULE 40.
3. ALL PIPING IS SEISMIC CLASS I, EXCEPT FOR TURBINE BUILDING.
4. AUX. FEED PUMP BLDG. VENTILATION SYSTEM: FANS, DAMPERS & LOUVERS #311, 312, 314 ARE QA NON-CAT I W/SEISMIC SUPPORTS. FANS, DAMPERS & LOUVERS #313, 315 ARE QA NON-CAT I W/NON-SEISMIC SUPPORTS.
5. FDR-30-CB CLOSES UPON ACTIVATION OF 33' CONTROL BLDG. CO2 SYSTEM.
6. WORK THIS DRAWING WITH 9321-F-41023 SH. 2.

LEGEND:

- SUPPLY AIR
- CONTROL AIR
- ELEC WIRING

FOR ADDITIONAL LEGEND SYMBOLS, SEE DWG. 9321-F-41023 SH. 2

REFERENCE DOCUMENTS:

9321-F-20293	FLOW DIAGRAM STARTING AIR TO DIESEL GENERATORS.
9321-F-27263	FLOW DIAGRAM PENETRATION & LINER WELD JOINT CHANNEL PRESSURIZATION SYSTEM.
9321-F-40483	DIESEL GENERATOR BUILDING HEATING & VENTILATION PLAN & SECTION.
9321-F-40543	ELECTRICAL TUNNEL, MCB & DG BUILDING VENTILATION SCHEMATIC PLAN & SECTION.
9321-F-40553	ELECTRICAL TUNNEL VENTILATION EQUIP RM ELEV. 65'-0" PLAN & SECTION.
9321-F-20363	FLOW DIAGRAM INSTRUMENT AIR.
122C-100000939	AUTOMATIC CONTROLS FOR HEATING AIR CONDITIONING AND VENTILATION FOR CONTROL ROOM AIR CONDITIONING DIESEL GENERATOR BUILDING AND ELECTRICAL TUNNEL VENT EXHAUST FANS.

REV	DESCRIPTION	DATE	BY	CHKD	APP.
23	INCORPORATED DRN-05-04501, ER-04-3-003.		DM		

REVISIONS

DWN	CHK'D
DES SUPV	
DISCIPLINE ENG	
DISCIPLINE MGR.	
PROJ APPROVAL	
DATE	

INDIAN POINT NO. 3 NUCLEAR POWER PLANT

FLOW DIAGRAM
VENTILATION SYSTEM FOR TURBINE, DIESEL GENERATOR, CONTROL BLDG. ELECTRICAL TUNNELS AND AUXILIARY FEED PUMP BUILDING

Entergy
Nuclear Northeast

SCALE: NONE
DWG NO 9321-F-41023
REV 23
SHEET 1

TYPE A

THIS IS A COMPUTER AIDED DESIGN DRAWING. A RECORD OF THE REVISIONS OF THIS DOCUMENT WITH APPROVAL INITIALS/SIGNATURES, IS MAINTAINED IN THE FILES OF ENTERGY NUCLEAR NORTHEAST.

SYSTEM INTENDED FUNCTION BOUNDARY

COMPONENTS SUBJECT TO AMR

HEATING, VENTILATION AND AIR CONDITIONING SYSTEMS AMM-15

EMERGENCY DIESEL GENERATOR SYSTEM AMM-17

NO.	DATE	DESCRIPTION	BY	ENG	CHK	APP
0	11-16-06	.	.	.	.	.

REVISIONS

LRA-9321-41023-001-0

CAD FILE LRA-9321-41023-001_23.DGN
MASTER FILE 9321-41023-001_23.CAL

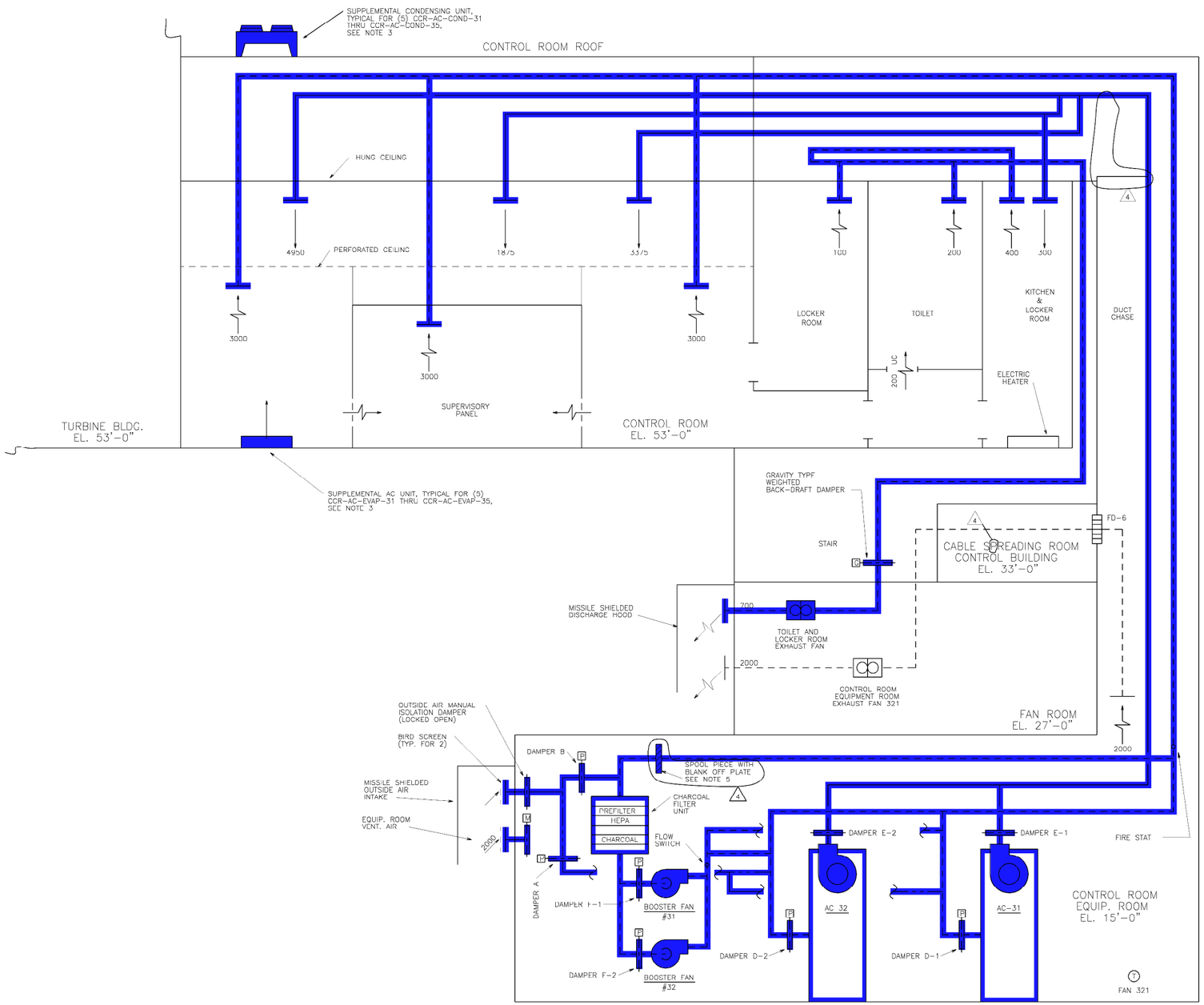

LEGEND

- SUPPLY DUCTWORK
- RETURN OR EXHAUST DUCTWORK
- OUTSIDE AIR INTAKE DUCTWORK
- MANUAL DAMPER
- DAMPER WITH OPERATOR (*)
  M = MOTOR (ELECTRIC)
  G = GRAVITY
  P = PNEUMATIC
- FIRE DAMPER
- INLINE FAN
- CENTRIFUGAL FAN
- RETURN OR EXHAUST REGISTER OR GRILLE
- SUPPLY REGISTER OR DIFFUSER
- LOUVER DOOR
- UC — UNDER CUT
- SPOOL PIECE WITH BLANK OFF PLATE (4)

NOTES

1. DAMPERS E_1 AND E_2 ARE NORMALLY OPEN, AND ARE CLOSED FOR MAINTENANCE ONLY.
2. DAMPERS F_1 AND F_2 ARE USED WITH THE ASSOCIATED BOOSTER FAN. DAMPER POSITIONS AND QUANTITIES SHOWN ARE FOR FAN 31 IN OPERATION (MODE 3 & 4). BOOSTER FANS ARE IN STAND-BY DURING MODE 2 .
3. THIS IS A SUPPLEMENTAL COOLING SYSTEM (NON-SAFETY RELATED), INDEPENDENT OF THE EXISTING CCR A/C SYSTEM.
4. WORK THIS DRAWING WITH 9321-F-41023 SH. 1.
5. (4) SPOOL PIECE WITH BLANK OFF PLATE INSTALLED AT FORMER DAMPER "C" LOCATION

REFERENCE DRAWINGS

9321-F-40593 CONTROL ROOM ELEVATION 53'-0" AIR CONDITIONING PLAN-SECTIONS AND DETAILS.

1220-100000939 AUTOMATIC CONTROLS FOR HEATING AIR CONDITIONING AND VENTILATION FOR CONTROL ROOM AIR CONDITIONING DIESEL GENERATOR BUILDING AND ELECTRICAL TUNNEL VENT EXHAUST FANS.

MODE	DAMPER (POSITION / CFM) A	B	D_1	D_2	E_1*	E_2*	F_1*	F_2*	SPOOL PIECE WITH BLANK OFF PLATE (POSITION / CFM)
(MODE 2) NORMAL	OPEN/ 1500	CLOSED/ 0	OPEN/ 5250	OPEN/ 5250	OPEN/ 5250	OPEN/ 5250	CLOSED/ 0	CLOSED/ 0	CLOSED/ 0
(MODE 3) 10% INCIDENT	CLOSED/ 0	OPEN/ ≥1500	OPEN/ 5250	OPEN/ 5250	OPEN/ 5250	OPEN/ 5250	OPEN/ 2000 MAX	CLOSED/ 0	CLOSED/ 0
(MODE 4) 100% RECIRCULATION	CLOSED/ 0	CLOSED/ 0	OPEN/ 5250	OPEN/ 5250	OPEN/ 5250	OPEN/ 5250	CLOSED/ 0	CLOSED/ 0	CLOSED/ 0

* FOR DAMPER POSITIONS SEE NOTES 1 AND 2.

REV	DESCRIPTION	DATE	BY	CHK'D	APP.
4	INCORPORATED DRN-04-04075 ER-04-3-081		CH		

REVISIONS

SYSTEM INTENDED FUNCTION BOUNDARY

COMPONENTS SUBJECT TO AMR

CONTROL ROOM HEATING, VENTILATION AND AIR CONDITIONING SYSTEMS AMM-29

DWN | CHK'D
DES SUPV
DISCIPLINE ENG
DISCIPLINE MGR.
PROJ APPROVAL
DATE

INDIAN POINT NO.3 NUCLEAR POWER PLANT

CONTROL ROOM FLOW DIAGRAM

Entergy Nuclear Northeast

SCALE NONE
DWG NO 9321-F-41023 REV 4
SHEET 2

TYPE A

THIS IS A COMPUTER AIDED DESIGN DRAWING. A RECORD OF THE REVISIONS OF THIS DOCUMENT WITH APPROVAL INITIALS/SIGNATURES, IS MAINTAINED IN THE FILES OF ENTERGY NUCLEAR NORTHEAST

NO.	DATE	DESCRIPTION	BY	ENG	CHK	APP
0	6-2-06	.	.	.	.	.

REVISIONS

LRA-9321-41023-002-0

CAD FILE LRA-9321-41023-002_04.DGN
MASTER FILE 9321-41023-002_04.CAL

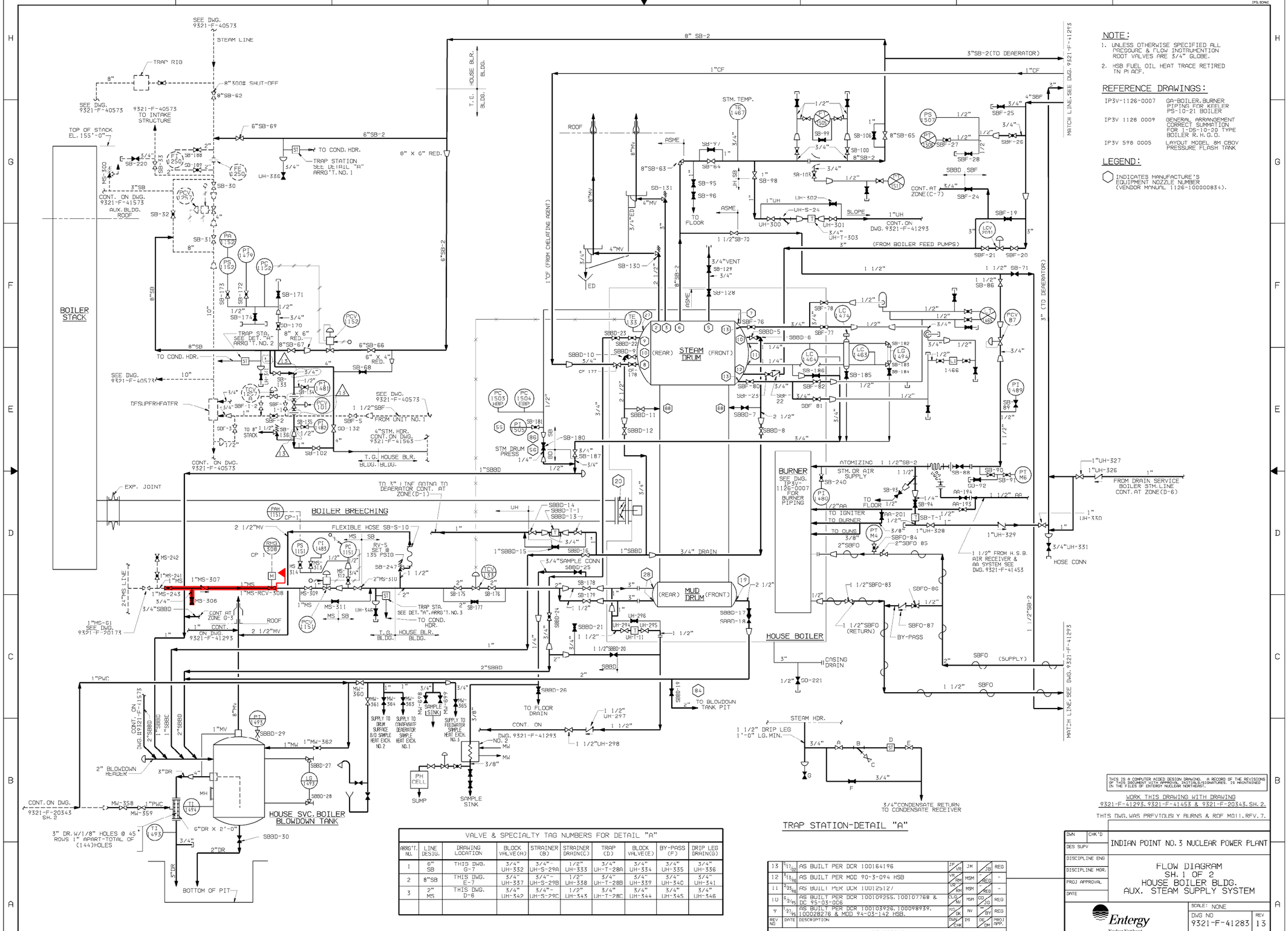

NOTE:

1. UNLESS OTHERWISE SPECIFIED ALL PRCOGURE & FLOW INCTRUMENTION ROOT VALVES ARE 3/4" GLOBE.
2. HSB FUEL OIL HEAT TRACE RETIRED IN PLACE.

REFERENCE DRAWINGS:

IP3V-1126-0007	GA-BOILER, BURNER PIPING FOR KEILER PS-10-21 BOILER
IP3V 1126 0009	GENERAL ARRANGEMENT CORRECT SUMMATION FOR 1-DS-10-20 TYPE BOILER R.H.G.O.
IP3V 598 0005	LAYOUT MODEL 8M CBOV PRESSURE FLASH TANK

LEGEND:

⬡ INDICATES MANUFACTURE'S EQUIPMENT NOZZLE NUMBER (VENDOR MANUAL 1126-100000834).

SYSTEM INTENDED FUNCTION BOUNDARY

COMPONENTS SUBJECT TO AMR

MAIN STEAM SYSTEM AMM-23

VALVE & SPECIALTY TAG NUMBERS FOR DETAIL "A"

ARRG'T. NU.	LINE DESIG.	DRAWING LOCATION	BLOCK VALVE(A)	STRAINER (B)	STRAINER DRAIN(C)	TRAP (D)	BLOCK VALVE(E)	BY-PASS (F)	DRIP LEG DRAIN(G)
1	6" SB	THIS DWG. G-7	3/4" UH-332	3/4"- UH-S-29A	1/2" UH-333	3/4" UH-T-28A	3/4" UH-334	3/4" UH-335	3/4" UH-336
2	8"SB	THIS DWG. E-7	3/4" UH-337	3/4"- UH-S-29B	1/2" UH-338	3/4" UH-T-28B	3/4" UH-339	3/4" UH-340	3/4" UH-341
3	2" MS	THIS DWG. D-6	3/4" UH-342	3/4"- UH-S-29C	1/2" UH-343	3/4" UH-T-28C	3/4" UH-344	3/4" UH-345	3/4" UH-346

REVISIONS

REV NO	DATE	DESCRIPTION	DWN / CHK	DS	DE / DM	PROJ APPR.
13	5/17/00	AS BUILT PER DCR 100164196	JF / VR / JM / GK	JB	REG	
12	3/13/98	AS BUILT PER MOD 90-3-094 HSB	VR / RM	MSM	RCD	-
11	2/25/93	AS BUILT PER DCR 100125127	VR / RH	MSM	REG	-
10	6/2/95	AS BUILT PER DCR 100109255, 100107768 & DC 95-03-006	CLG / NV	MSM	SD / JG	REG
9	1/27/95	AS BUILT PER DCR 100103926, 100098939, 100028278 & MOD 94-03-142 HSB.	KG / GK	NV	BY	REG

THIS IS A COMPUTER AIDED DESIGN DRAWING. A RECORD OF THE REVISIONS OF THIS DOCUMENT WITH APPROVAL INITIALS/SIGNATURES, IS MAINTAINED IN THE FILES OF ENTERGY NUCLEAR NORTHEAST.

WORK THIS DRAWING WITH DRAWING 9321-F-41293, 9321-F-41453 & 9321-F-20343, SH. 2.

THIS DWG. WAS PREVIOUSLY BURNS & ROE M011, REV. 7.

DWN	CHK'D
DES SUPV	
DISCIPLINE ENG	
DISCIPLINE MGR.	
PROJ APPROVAL	
DATE	

INDIAN POINT NO. 3 NUCLEAR POWER PLANT

FLOW DIAGRAM
SH. 1 OF 2
HOUSE BOILER BLDG.
AUX. STEAM SUPPLY SYSTEM

Entergy
Nuclear Northeast

SCALE: NONE

DWG NO 9321-F-41283 REV 13

SHEET

NO.	DATE	DESCRIPTION	BY	ENG	CHK	APP
0	3-22-07					

REVISIONS

LRA-9321-41283-0

CAD FILE LRA-9321-41283_13.DGN

MASTER FILE 9321-41283_13.CAL

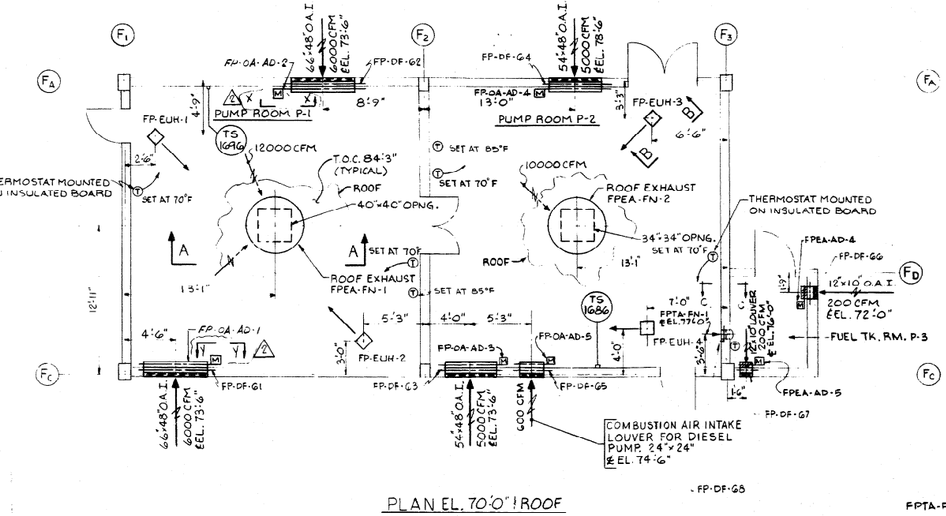

PLAN EL. 70'-0" / ROOF

SCALE 1/4"=1'-0"

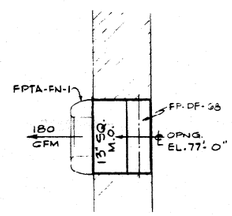

SECTION C-C

SCALE: 1½"=1'-0"

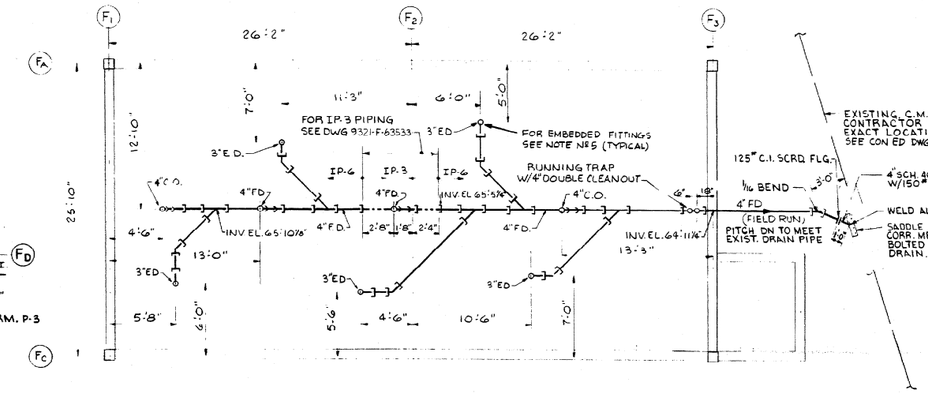

PLAN BELOW EL 70'-0"

SCALE 1/4"=1'-0"

GRAPHIC SCALE

GENERAL NOTES

1. FOR MECHANICAL SYMBOLS & ABBREVIATIONS SEE DWG. 9321-F-83913 AND 9321-F-83923.
2. ALL INSTRUMENTATION IS SHOWN DIAGRAMMATICALLY.
3. GUARD PIPE DRAINS SHALL BE ABOVE TOP OF STORAGE TANK. DRAIN LINE SHALL HAVE A MIN. OF 1/4" PER FOOT SLOPE TOWARD OIL COLLECTION TANK.
4. FINAL LOCATION OF THERMOSTATS SUBJECT TO FIELD CONDITIONS. ℄ OF THERMOSTATS 5'-0" ABOVE FINISED FLOOR. ALL THERMOSTATS SHALL BE FURNISED WITH PROTECTIVE GUARDS.
5. a) FLOOR DRAINS - FD-ZURN #Z525 OR EQUAL. b) EQUIP. DRAINS - ED-ZURN #Z525 WITH #Z414 OR EQUAL.
6. CLEAN OUTS - CO-ZURN #Z1455-6 OR EQUAL.

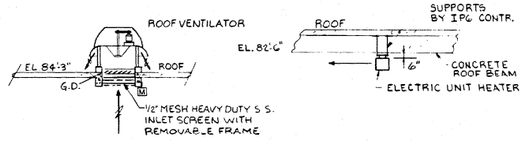

SECTION "A-A" (TYPICAL)

SCALE 1/4"=1'-0"

SECTION "B-B" (TYPICAL)

SCALE 1/4"=1'-0"

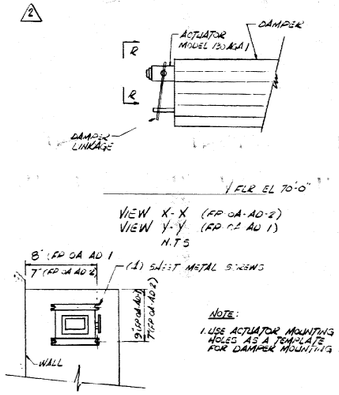

NOTE:
1. USE ACTUATOR MOUNTING HOLES AS A TEMPLATE FOR DAMPER MOUNTING HOLES

WORK THIS DWG. WITH DWGS: 9321-F-41663 & 9321-F-41673

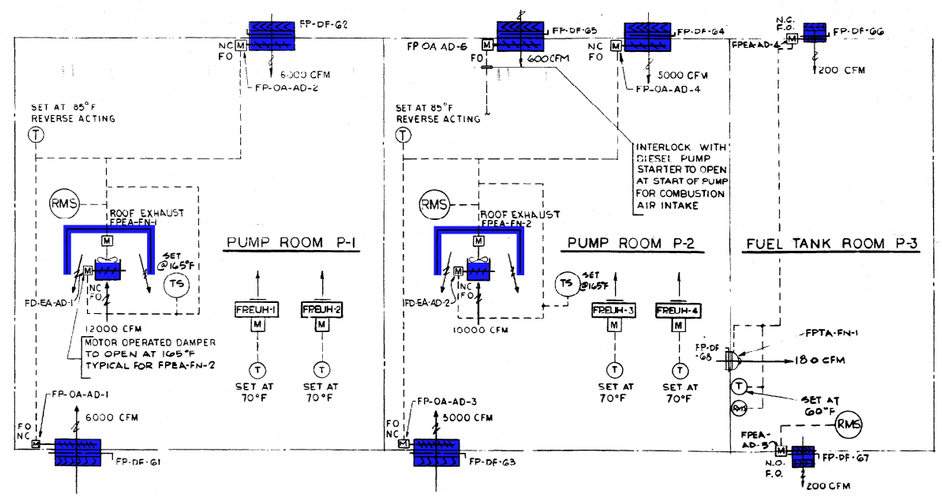

H&V FLOW DIAGRAM

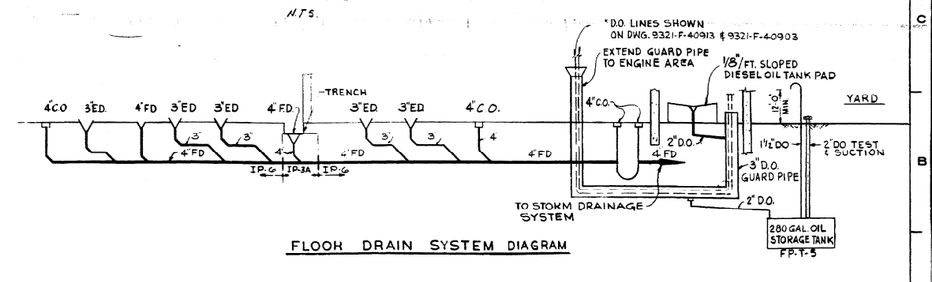

FLOOR DRAIN SYSTEM DIAGRAM

ISSUED AS CONTRACT DWG. FOR CONTRACTS: 12-04
ISSUED AS INFORMATION DWG. FOR CONTRACTS: 12-04

THIS DWG. WAS PREVIOUSLY B&R DWG NO. MOBI SHT. 1 OF 1 REV. 6

REV.	REVISION	DRN	DSN	CHK	APP
6	REVISED PER "AS-BUILT" CONDITIONS REPORTED FIELD COMMENTS				
0	ORIGINAL ISSUE-SUPERCEDES B&R DWG. NO. MOBI REV. NO. 6 AS PER BURNS & ROE RENUMBERING TASK				
1	AS BUILT PER DCR # 100124173				
2	AS BUILT PER DC 96-3-373				

REV.	Revision	Date	Drwn	Chkd	Appd
0	GENERAL REVISION - ISSUED FOR CONSTRUCTION IP6				
1	ADDED (2) (1-½) MOTOR MOD. (C-11XC-11)				
2	ADDED FAN IN FUEL TK. ROOM & ADDED MOTOR OPERATED DAMPERS PER PCN 2-H-303				
3	REVISED FAN NOTE PER REPORT PCN 2-H-320				
4	ADDED RMS/S-01 FOR FPEA-AD-5				
5	ADDED TEMP. SW. & REV. NOTE PER PCN 2-H-356				

Engineering Review: Rev. No. / Sign / Date

Computing Reference Drawings: Number / Rev. / Title

Released for: By: Date

Construction / Record / Information

Engineer for Construction: Mark Cooper 11/4/96

Chief Mechanical Engineer: Kenneth Cole

Approved for Construction: Mark Cooper 11/4/96

Chief Mechanical Engineer: Kenneth Cole

POWER AUTHORITY STATE OF NEW YORK
INDIAN POINT UNIT NO. 3 - ADDITIONAL FACILITIES
H & V AND DRAINAGE
FIRE PUMP HOUSE, FLOW DIAG., PLAN & DET.
BURNS AND ROE, INC.
NEW YORK - NEW YORK - CONNECTICUT - CALIFORNIA

Scale: AS NOTED | Drawing No.: 3372 9321-F-41683

NO.	DATE	DESCRIPTION	BY	ENG	CHK	APP
0	7-14-06					

REVISIONS

LRA-9321-41683-0

CAD FILE: LRA-9321-41683_02.DGN

RASTER FILE: 9321-41683_02.CAL

SYSTEM INTENDED FUNCTION BOUNDARY

COMPONENTS SUBJECT TO AMR

HEATING, VENTILATION AND AIR CONDITIONING SYSTEMS AMM-15