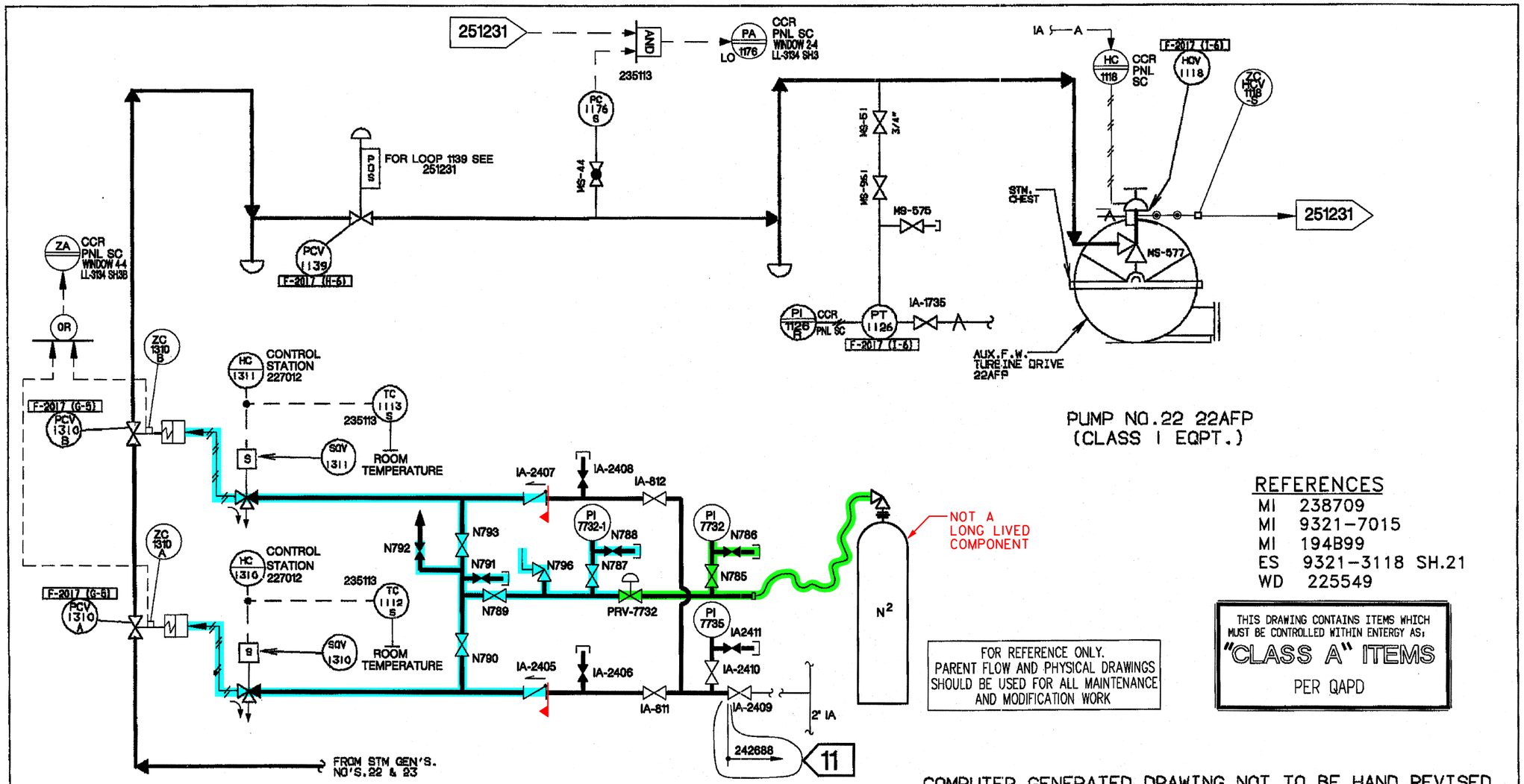

REFERENCES
MI 238709
MI 9321-7015
MI 194B99
ES 9321-3118 SH.21
WD 225549

FOR REFERENCE ONLY.
PARENT FLOW AND PHYSICAL DRAWINGS SHOULD BE USED FOR ALL MAINTENANCE AND MODIFICATION WORK

THIS DRAWING CONTAINS ITEMS WHICH MUST BE CONTROLLED WITHIN ENTERGY AS:
"CLASS A" ITEMS
PER QAPD

COMPUTER GENERATED DRAWING NOT TO BE HAND REVISED

REV	DESCRIPTION	DATE	BY	CHK'D	APP.
11	INCORPORATED IP2-DRN-04-01383, ER-IP2-04-13114	06/28/04	GH	[signature]	TC

REVISIONS

DATE	CKR.	SUPV.	DESIGN ENG	DISC. ENG.	ENG. MGR.
3/20/92	N.D.	D.LOW 3-20-92	W.J.KING 03-20-92	V.J. 03-24-92	S.HELFANT 03-27-92

REVIEW — APPROVALS

TITLE: AFW
STEAM SUPPLY AUX.FEED
WATER PUMP #22 LOOP NO'S.
1118,1126, 1176,1310 & 1311

DRWN. BY K.EYMOLD — SCALE NONE — REC'D

Con Edison

STATION INDIAN PT

DWG. NO. D251232-11 MX

SYSTEM INTENDED FUNCTION BOUNDARY

COMPONENTS SUBJECT TO AMR
NITROGEN SYSTEMS AMM-10
COMPRESSED AIR SYSTEMS AMM-14

NO.	DATE	DESCRIPTION	BY	ENG	CHK	APP
0	12-1-06					

REVISIONS
LRA-251232-0
CAD FILE LRA-251232_11.DGN
MASTER FILE 251232_11.CAL

ted from the Motiva Vault – Entergy Nuclear Northeast – Indian Point Energy Center

251783

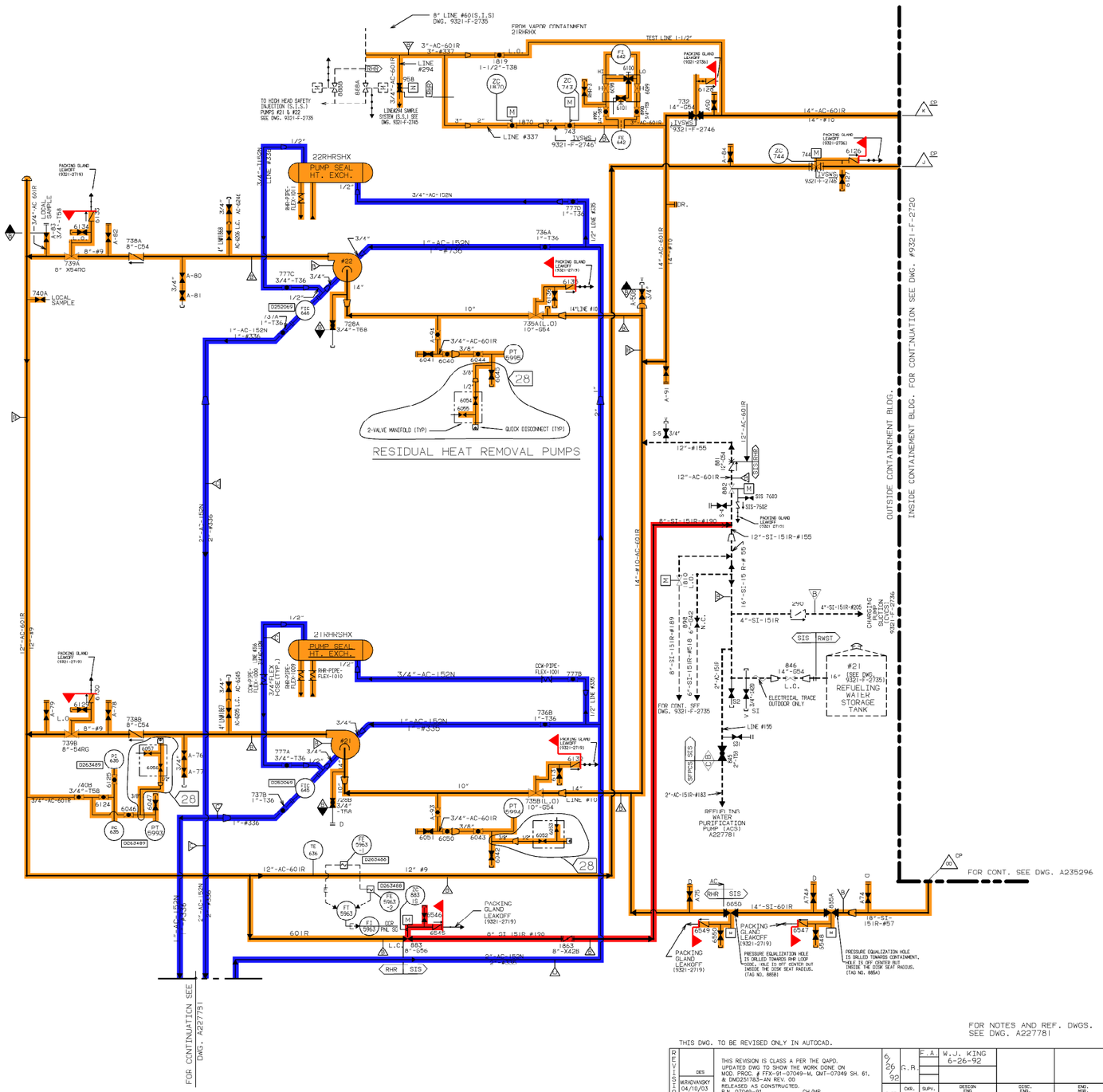

NOTES:

1. THE QUALITY GROUP A,B,C AND SEISMIC BOUNDARIES EXTEND TO THE FIRST SEISMIC SUPPORT/RESTRAINT BEYOND THE BOUNDARIES SHOWN.

FOR NOTES AND REF. DWGS. SEE DWG. A227781

THIS DRAWING CONTAINS ITEMS WHICH MUST BE DUNIMILLS WITHIN UNIMUT ASI

*CLASS A * ITEMS PER THE QAPD

THIS DWG. TO BE REVISED ONLY IN AUTOCAD.

ZONE	DES	REV	DATE	DRN. BY	CHK.	SUPV.	DESIGN ENG	DISC. ENG.	ENG. MGR.
	MRADVANSKY 04/10/03	0	6/26/92	G.R.	F.A.	W.J. KING 6-26-92			

THIS REVISION IS CLASS A PER THE QAPD. UPDATED DWG TO SHOW THE WORK DONE ON MOD. PROC. # FFX-91-07049-M, QMT-07049 SH. 61, & DM0251783-AN REV. 00 RELEASED AS CONSTRUCTED. P.N. 07049-91 GH/MR

REVIEW — APPROVALS

TITLE: FLOW DIAGRAM
AUXILIARY COOLANT SYSTEM
RESIDUAL HEAT REMOVAL PUMPS -
UFSAR FIGURE No. 9.3-1 (SHT. 3)

DRWN. BY J.SESE | SCALE NONE | REC'D

Edison — STATION: INDIAN POINT

DWG. NO. A251783-28 | MY

SYSTEM INTENDED FUNCTION BOUNDARY

COMPONENTS SUBJECT TO AMR

- SAFETY INJECTION SYSTEM AMM-03
- RESIDUAL HEAT REMOVAL AMM-05
- COMPONENT COOLING WATER SYSTEM AMM-13

NO.	DATE	DESCRIPTION	BY	ENG	CHK	APP
0	1-19-07					

REVISIONS

LRA-251783-0

CAD FILE LRA-251783_28.DGN
MASTER FILE 251783_28.CAL

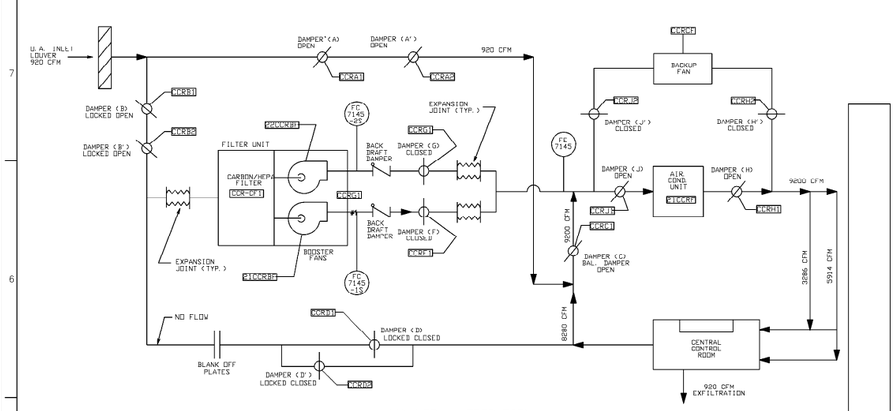

(1) NORMAL OPERATION
OUTSIDE AIR MAKEUP

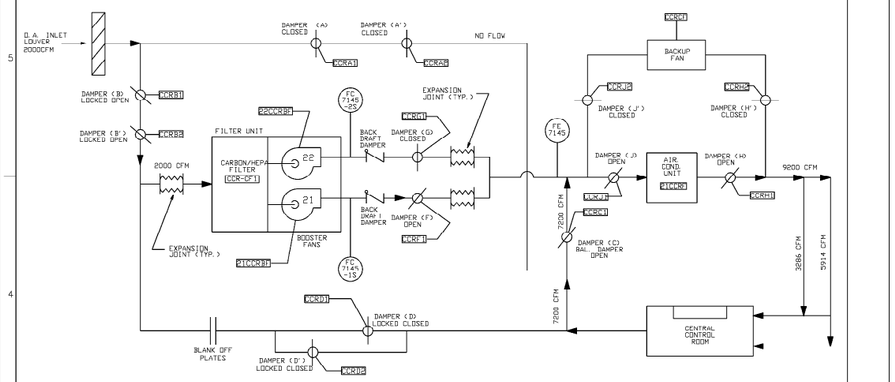

(2) INCIDENT - OUTSIDE
AIR FILTERED PRESSURIZATION
S. I. OR HIGH RADIATION

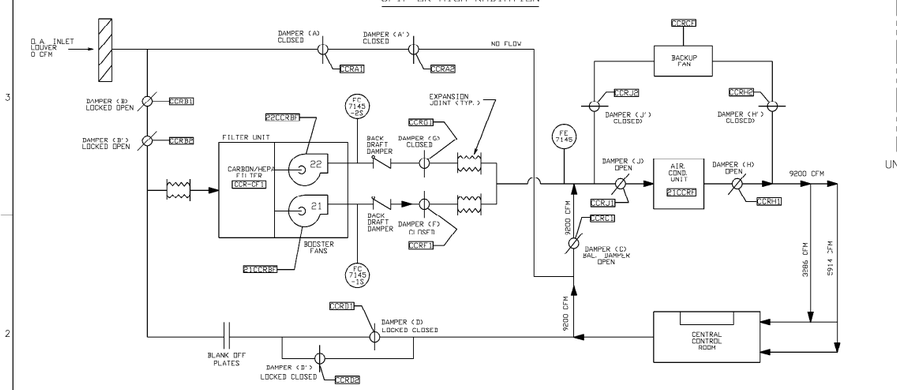

(3) INCIDENT 100 % RECIRCULATION MODE
TOXIC GAS OR SMOKE

AIR FLOW DIAGRAMS

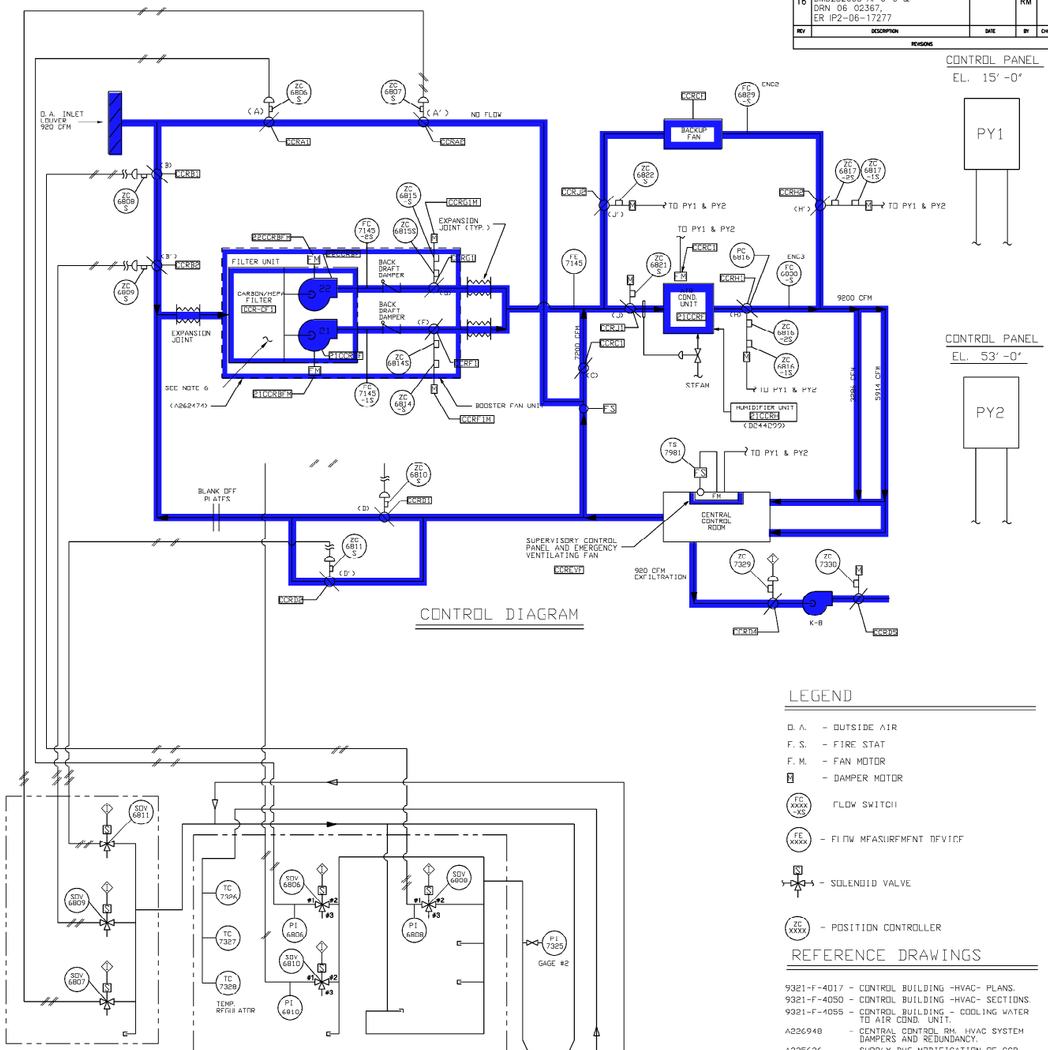

CONTROL DIAGRAM

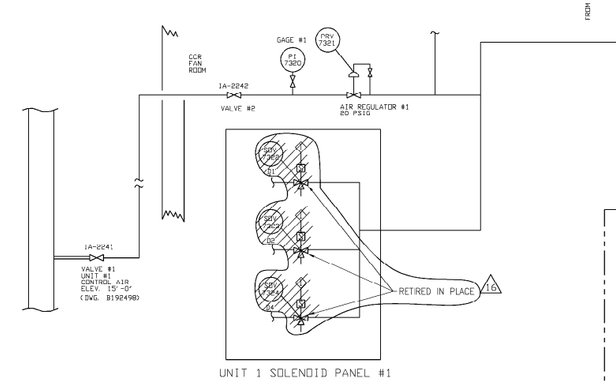

CONTROL AIR SUPPLY

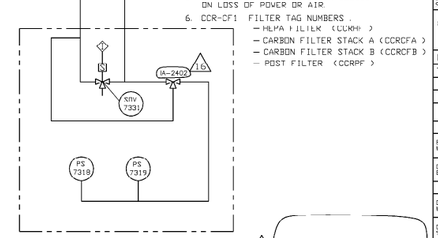

LEGEND

O.A. - OUTSIDE AIR
F.S. - FIRE STAT
F.M. - FAN MOTOR
- DAMPER MOTOR
FC XXXX -XS - FLOW SWITCH
FE XXXX - FLOW MEASUREMENT DEVICE
- SOLENOID VALVE
ZC XXXX - POSITION CONTROLLER

REFERENCE DRAWINGS

9321-F-4017 - CONTROL BUILDING -HVAC- PLANS.
9321-F-4050 - CONTROL BUILDING -HVAC- SECTIONS.
9321-F-4055 - CONTROL BUILDING - COOLING WATER TO AIR COND. UNIT.
A226948 - CENTRAL CONTROL RM. HVAC SYSTEM DAMPERS AND REDUNDANCY.
A225936 - SUPPLY DWG. MODIFICATION OF CCR VENTILATION SYSTEM.
9321-F-3147 - CONDUIT LAYOUT CONTROL ROOM AIR CONDITIONING.
A262474 - CARBON FILTER UNIT (SHEET 1 OF 2)
B244299 - CCR HUMIDIFIER FLOW DIAGRAM
192498 - PIPING FLOW DIAGRAM-CONTROL AIR SYSTEM

NOTES

1. DAMPERS J' & H' ARE NORMALLY CLOSED, OPEN WHEN A.C. FAN IS OFF. (BACKUP FAN ON)
2. DAMPERS J & H ARE NORMALLY OPEN, CLOSED WHEN A.C. FAN OFF. (BACKUP FAN ON)
3. [ ] = 'Q' DESIGNATED EQUIPMENT NO.
4. AIRFLOW RATES (CFMs) SHOWN ON THIS FLOW DIAGRAM DRAWING ARE FOR DESIGN CONDITIONS ONLY.
5. DAMPER D & D' WILL REMAIN CLOSED ON LOSS OF POWER OR AIR.
6. CCR-CF1 FILTER TAG NUMBERS.
   - HEPA FILTER (CCHH)
   - CARBON FILTER STACK A (CCRCFA)
   - CARBON FILTER STACK B (CCRCFB)
   - POST FILTER (CCRPF)

REV	DESCRIPTION	DATE	BY	CHK'D	APP.
16	INCORPORATED DMD252665 AH-0-0, DMD252665 AJ-0-0 & DRN 06 02367, ER IP2-06-17277		RM		

REVISIONS

REVISION
USE .1 SIZE TEXT ONLY

SYSTEM INTENDED FUNCTION BOUNDARY

COMPONENTS SUBJECT TO AMR

CONTROL ROOM HEATING, VENTILATION AND AIR CONDITIONING SYSTEMS AMM-29

REV	DES	ENG
00		

REVISION SIGNATURES

DWG. NO. 252665 -16
DWG. SIZE A
DWG. TYPE COMPANY
Entergy Nuclear Northeast
STATION INDIAN POINT
BORO: WESTCHESTER
TITLE: CONTROL BUILDING (CCR)
CONTROL AND AIR FLOW DIAGRAMS
-UFSAR FIGURE NO. 9.9-1

APPROVALS

ENGINEERING
ENGINEER MANAGER:
DISCIPLINE ENGINEER:

DESIGN
DESIGN MANAGER: M. J. CAPUTO 12/30/93
DESIGN SUPERVISOR: A. D.
DRAWN BY:
DESIGN CHECKER: E. D.

SCALE: NONE
DISCIPLINE CODE: MY

NO.	DATE	DESCRIPTION	BY	ENG	CHK	APP
0	11-14-06					

REVISIONS

LRA-252665-0

CAD FILE LRA-252665_16.DGN
MASTER FILE 252665_16.CAL

COMPUTER GENERATED DRAWING NOT TO BE HAND REVISED

A260586

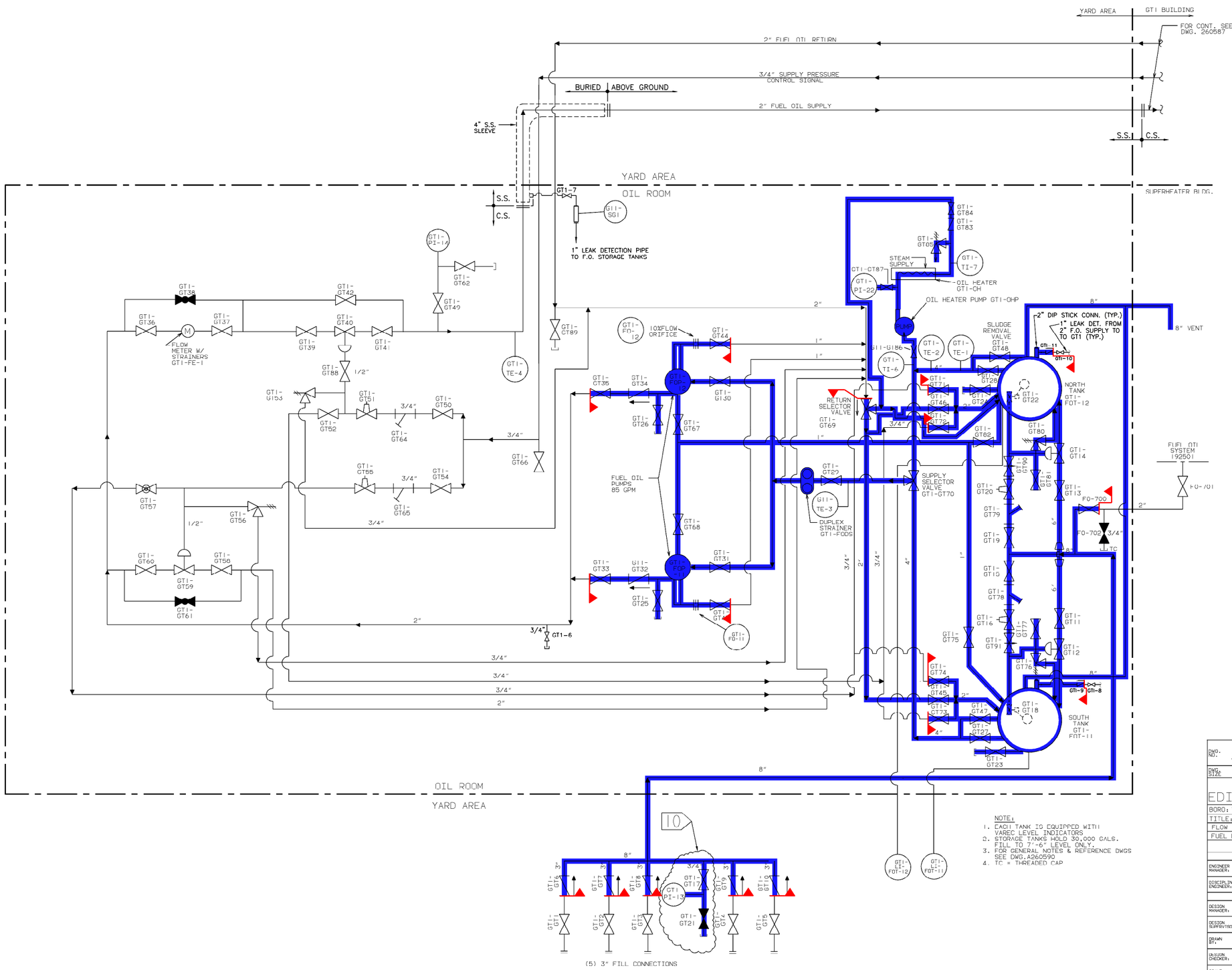

NOTE:
1. EACH TANK IS EQUIPPED WITH VAREC LEVEL INDICATORS
2. STORAGE TANKS HOLD 30,000 GALS. FILL TO 7'-6" LEVEL ONLY.
3. FOR GENERAL NOTES & REFERENCE DWGS SEE DWG.A260590
4. TC = THREADED CAP

REVISION
USE .1 SIZE TEXT ONLY
A. ADORNO 09/15/00 — 07
THIS REV. IS NON-CLASS PER CI-240-1. UPDATED DRAWING TO SHOW WORK DONE IN MOD. PROC. FPX-98-97733-F. DMD 260586-AC-01 R-939 ISSUED AS BUILT. P.N.97733-98 MPH
L.ALIBUTOD 12/20/00 — 08
THIS REV. IS NON-CLASS PER CI-240-1. UPDATED DRAWING PER CRS 200006012 & FILE #D-3090 AND CRS 200008210 & FILE #D-3153 RELEASED FOR RECORD P.N.69982-CD JWR/SWL
L.ALIBUTOD 01/16/01 — 09
THIS REV. IS NON-CLASS PER CI-240-1. UPDATED DRAWING PER CRS 200008210 RELEASED FOR RECORD P.N.69982-CD JWR/SWL
L.ALIBUTOD 01/26/01 — 10
THIS REV. IS NON-CLASS PER CI-240-1. UPDATED DRAWING PER CRS 200010049 RELEASED FOR RECORD P.N.69901-AF JWR/SWL

SYSTEM INTENDED FUNCTION BOUNDARY

COMPONENTS SUBJECT TO AMR

FUEL OIL SYSTEM AMM-21

REVISION SIGNATURES		
REV	DES	ENG
10		L.ALIBUTOD 01-26-01

DWG. NO. A260586-10

DWG SIZE | DWG TYPE

CON EDISON — STATION: INDIAN POINT

BORO: WESTCHESTER

TITLE: GAS TURBINE #1

FLOW DIAGRAM

FUEL FORWARDING SYSTEM

APPROVALS

ENGINEERING

ENGINEER MANAGER: M.ENTENBERG

DISCIPLINE ENGINEER: A.SHEIKH

DESIGN

DESIGN MANAGER:

DESIGN SUPERVISOR:

DRAWN BY: B.K.

DESIGN CHECKER: G.H.

SCALE: NONE — DISCIPLINE CODE: MB

NO.	DATE	DESCRIPTION	BY	ENG	CHK	APP
0	6-15-06					

REVISIONS

LRA-260586-0

CAD FILE: LRA-260586_10.DGN

MASTER FILE: 260586_10.CAL

COMPUTER GENERATED DRAWING NOT TO BE HAND REVISED

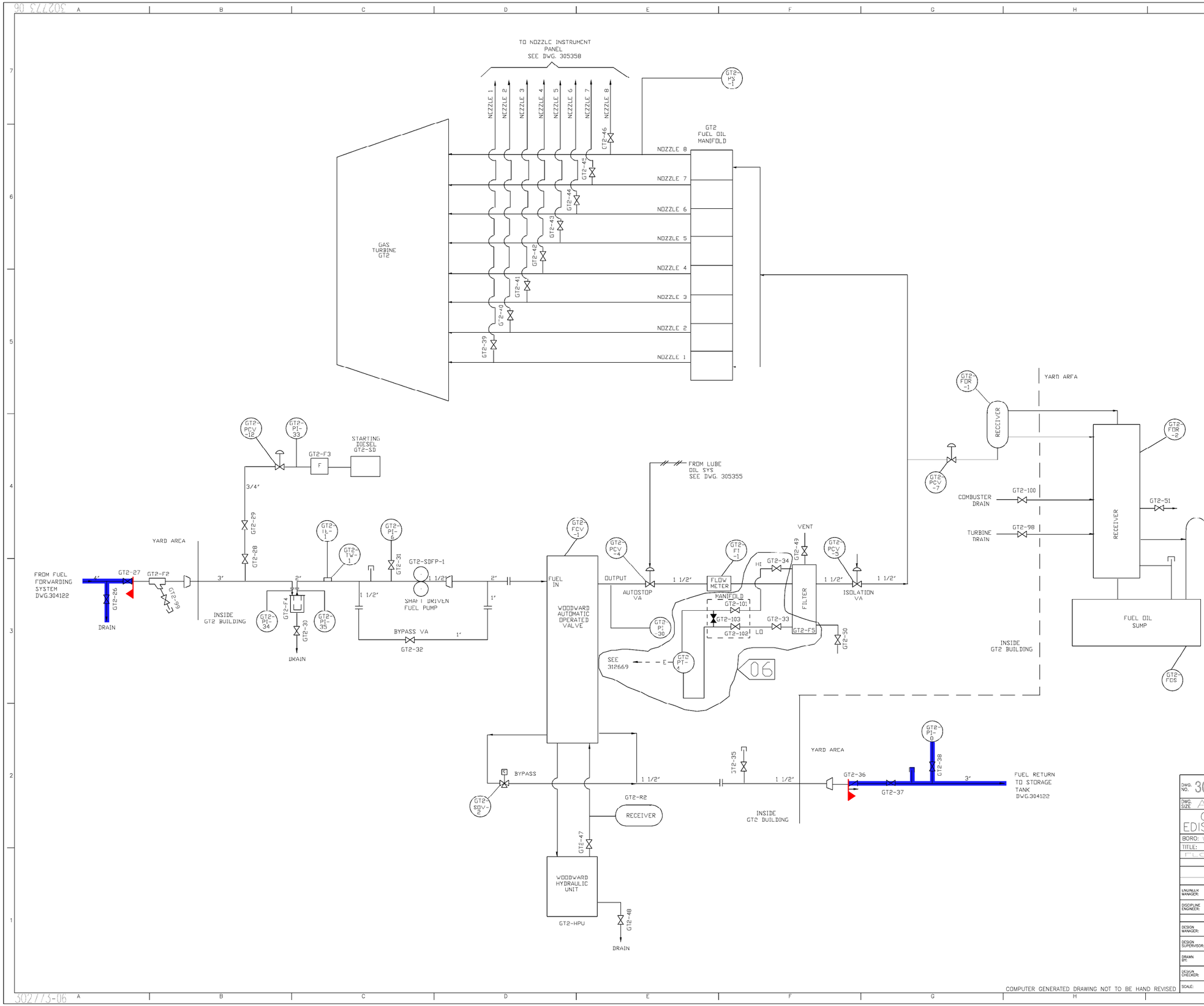

REVISION
USE .1 SIZE TEXT ONLY

L. ALIBUTOD 04/05/01 06
THIS REV IS NON-CLASS PER THE QAPD. UPDATED DWG AS PER CRS #199900614 RELEASED FOR RECORD.
P/N 69901-AF
RMT/S&L/SW

G. BHALLA 06/28/01 05
THIS REV IS NON-CLASS PER THE QAPD. UPDATED DWG AS PER CRS #200103569 CRS #200103570 RELEASED AS BUILT.
P/N 69901-AF
YJ/JN

V.MYERS 9/30/03 06
THIS REV IS NON-CLASS PER THE QAPD. DRAWING REVISED PER MOD. PROC. # FIX-99-12289-1. INCORPORATED DMD302773-AB REV. 01
RELEASED AS BUILT.
P/N 12289-99
9/30/03
SL/VM

SYSTEM INTENDED FUNCTION BOUNDARY

COMPONENTS SUBJECT TO AMR

FUEL OIL SYSTEM AMM-21

REVISION SIGNATURES

REV	DES	ENG
06		V.MYERS 9/30/03

DWG. NO. 302773-06
DWG. SIZE A
DWG. TYPE FLOW DIAGRAM
CON EDISON
STATION INDIAN POINT
BORO: WESTCHESTER
TITLE: FUEL OIL SYSTEM FLOW DIAGRAM GT-2

APPROVALS

ENGINEERING
ENGINEER MANAGER: P.DUGGAN
DISCIPLINE ENGINEER: K.CHOU

DESIGN
DESIGN MANAGER:
DESIGN SUPERVISOR:
DRAWN BY: SG
DESIGN CHECKER:
SCALE:
DISCIPLINE CODE: MB

COMPUTER GENERATED DRAWING NOT TO BE HAND REVISED

NO.	DATE	DESCRIPTION	BY	ENG	CHK	APP
0	6-15-06	.	.	.	.	.

REVISIONS
LRA-302773-0
CAD FILE LRA-302773_06.DGN
MASTER FILE 302773_06.CAL

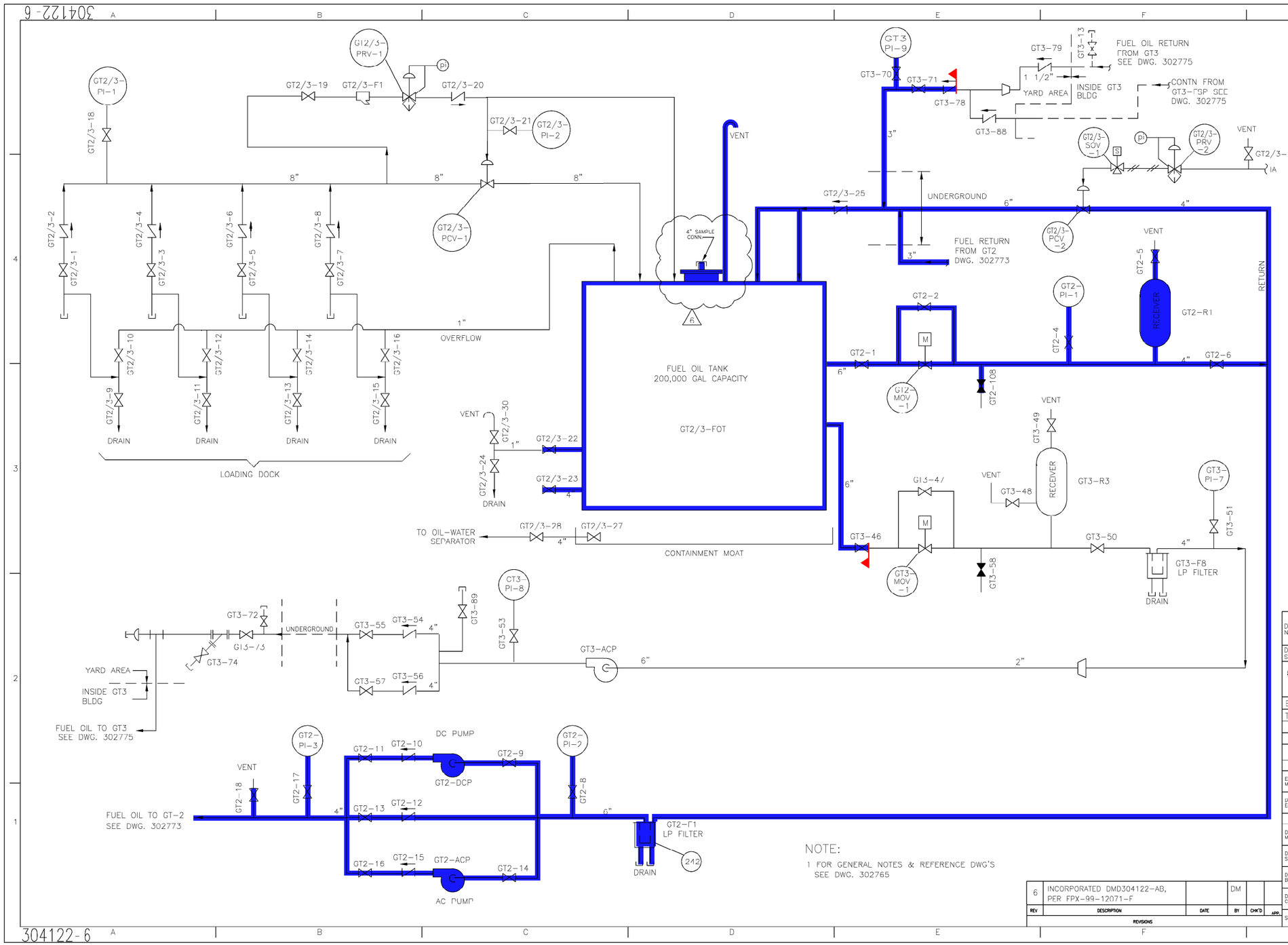

NOTE:

1 FOR GENERAL NOTES & REFERENCE DWG'S SEE DWG. 302765

REV	DESCRIPTION	DATE	BY	CHK'D	APP.
6	INCORPORATED DMD304122-AB, PER FPX-99-12071-F		DM		

REVISIONS

REVISION
USE 1 SIZE TEXT ONLY

05

THIS REV IS NON-CLASS PER THE QAPD. UPDATED DWG TO SHOW DRAIN VALVE & CORRECT POSITION OF GT3 DRAIN VALVE PER FIELD VERIFICATION & CR-IP2-2001-0/266. RELEASE AS CONSTRUCT. P.N. 69901-AF SW/

REVISION SIGNATURES

REV	DES	ENG
05		L. BURBIGE 12-23-02

DWG. NO. 304122-6

DWG. SIZE B

DWG. TYPE COMPANY

Entergy Nuclear Northeast

STATION INDIAN POINT

BORO: WESTCHESTER

TITLE: GT-2/3
FUEL FORWARDING SYSTEM
FLOW DIAGRAM

APPROVALS

ENGINEERING

ENGINEER MANAGER: P.DUGGAN

DISCIPLINE ENGINEER: K.CHOU

DESIGN

DESIGN MANAGER:

DESIGN SUPERVISOR:

DRAWN BY: SG

DESIGN CHECKER:

SCALE:

DISCIPLINE CODE: MB

SYSTEM INTENDED FUNCTION BOUNDARY

COMPONENTS SUBJECT TO AMR

FUEL OIL SYSTEM AMM-21

NO.	DATE	DESCRIPTION	BY	ENG	CHK	APP
0	11-27-06					

REVISIONS

LRA-304122-0

CAD FILE LRA-304122_06.DGN

MASTER FILE 304122_06.CAL

304122-6

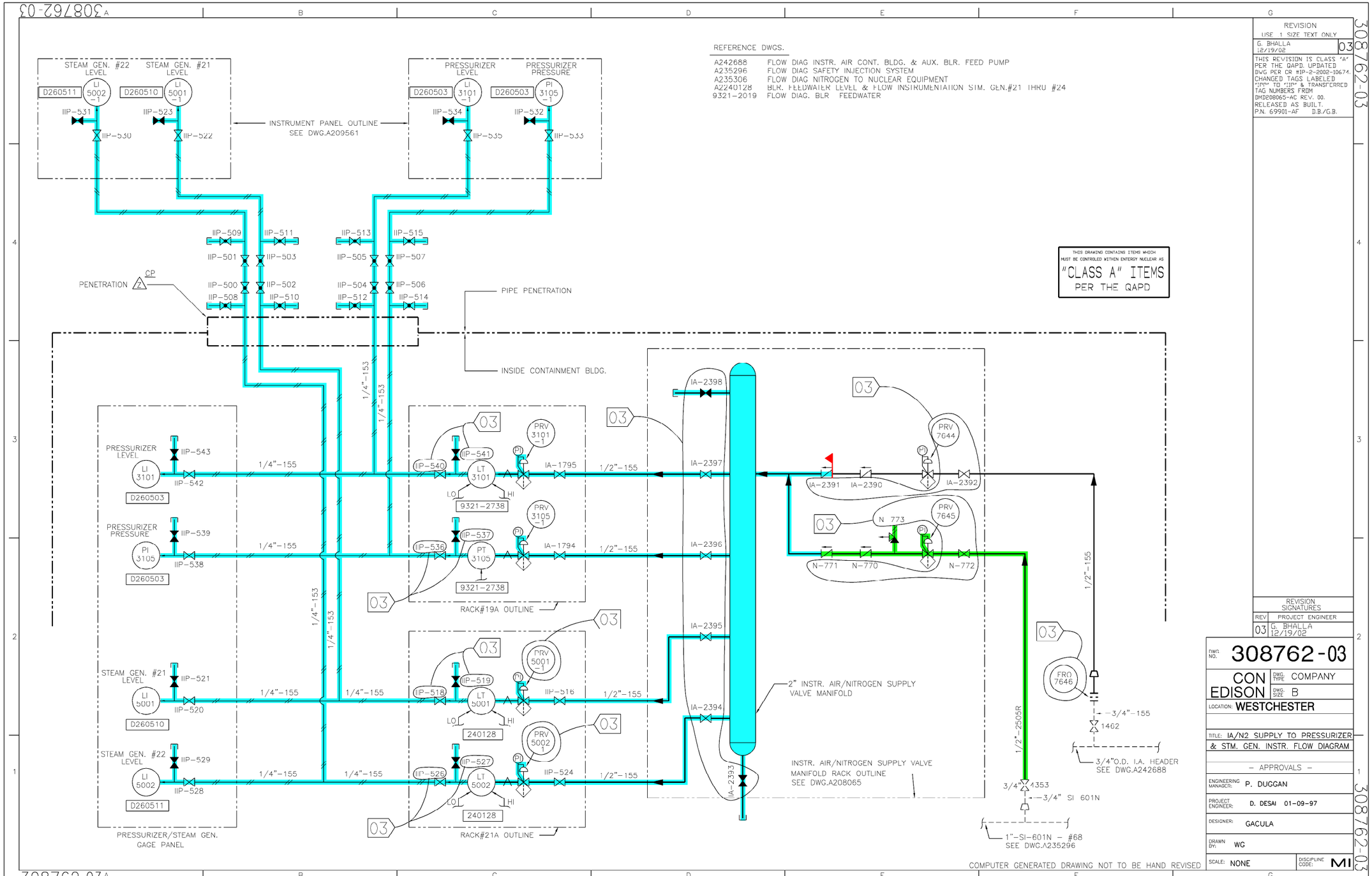

REFERENCE DWGS.

A242688	FLOW DIAG INSTR. AIR CONT. BLDG. & AUX. BLR. FEED PUMP
A235296	FLOW DIAG SAFETY INJECTION SYSTEM
A235306	FLOW DIAG NITROGEN TO NUCLEAR EQUIPMENT
A2240128	BLR. FEEDWATER LEVEL & FLOW INSTRUMENTATION STM. GEN.#21 THRU #24
9321-2019	FLOW DIAG. BLR FEEDWATER

THIS DRAWING CONTAINS ITEMS WHICH MUST BE CONTROLED WITHIN ENTERGY NUCLEAR AS "CLASS A" ITEMS PER THE QAPD

REVISION
USE 1 SIZE TEXT ONLY
G. BHALLA 12/19/02 03
THIS REVISION IS CLASS "A" PER THE QAPD. UPDATED DWG PER CR #IP-2-2002-10674. CHANGED TAGS LABELED "IPP" TO "IIP" & TRANSFERRED TAG NUMBERS FROM DMD208065-AC REV. 00. RELEASED AS BUILT. P.N. 69901-AF D.B./G.B.

REVISION SIGNATURES

REV	PROJECT ENGINEER
03	G. BHALLA 12/19/02

DWG. NO. 308762-03

CON EDISON — DWG. TYPE: COMPANY — DWG. SIZE: B

LOCATION: WESTCHESTER

TITLE: IA/N2 SUPPLY TO PRESSURIZER & STM. GEN. INSTR. FLOW DIAGRAM

– APPROVALS –

ENGINEERING MANAGER: P. DUGGAN
PROJECT ENGINEER: D. DESAI 01-09-97
DESIGNER: GACULA
DRAWN BY: WG
SCALE: NONE
DISCIPLINE CODE: MI

COMPUTER GENERATED DRAWING NOT TO BE HAND REVISED

SYSTEM INTENDED FUNCTION BOUNDARY

COMPONENTS SUBJECT TO AMR

NITROGEN SYSTEMS AMM-10

COMPRESSED AIR SYSTEMS AMM-14

NO.	DATE	DESCRIPTION	BY	ENG	CHK	APP
0	9-28-06	.	.	.	.	.

REVISIONS

LRA-308762-0

CAD FILE LRA-308762_03.DGN
MASTER FILE 308762_03.CAL

REV	DESCRIPTION	DATE	BY	CHK'D	APP.
0	ISSUED FOR ER-04-2-095.	05/27/05	WN	FE	FE

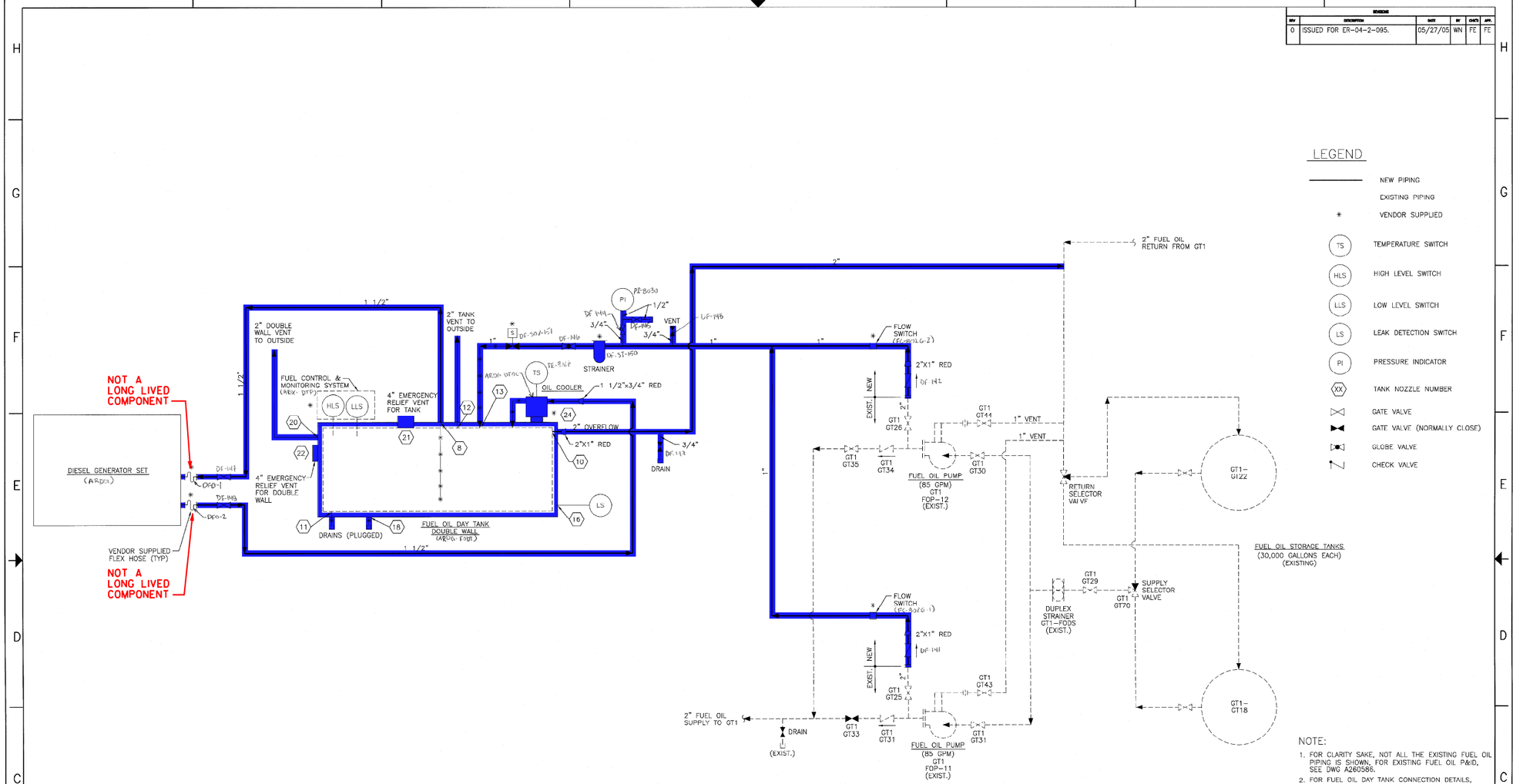

LEGEND

- NEW PIPING
- EXISTING PIPING
- * VENDOR SUPPLIED
- TS — TEMPERATURE SWITCH
- HLS — HIGH LEVEL SWITCH
- LLS — LOW LEVEL SWITCH
- LS — LEAK DETECTION SWITCH
- PI — PRESSURE INDICATOR
- XX — TANK NOZZLE NUMBER
- GATE VALVE
- GATE VALVE (NORMALLY CLOSE)
- GLOBE VALVE
- CHECK VALVE

NOTE:

1. FOR CLARITY SAKE, NOT ALL THE EXISTING FUEL OIL PIPING IS SHOWN. FOR EXISTING FUEL OIL P&ID, SEE DWG A260586.
2. FOR FUEL OIL DAY TANK CONNECTION DETAILS, SEE DETAIL 4, DWG 400884.

☐ Before ☒ After	SEN No. ISRN-05-00085	Page 1 of 1	
DCC. No. 400881	Chg. No.	REV. 0	
I.R. 04-2-095	Superseded DFN No.		
Cover Room Drawing? YES ☒ NO ☐		Resp. Auth. App. of Rev. YES ☐ NO ☒	
CN Required? YES ☐ NO ☒		Desc.?	
Prepared by	W. NIGJAWG	Date	05/27/05
Reviewed by		Date	5/31/05
Resp. Review (If Required)		Date	

INDIAN POINT ENERGY CENTER – UNIT 2

STATION BLACKOUT AND APPENDIX R
DIESEL GENERATOR SET
P&ID
FUEL OIL SYSTEM
MECHANICAL

Entergy Nuclear Northeast

DWG NO. 400881 REV 0

SCALE NONE SHEET

SYSTEM INTENDED FUNCTION BOUNDARY

COMPONENTS SUBJECT TO AMR

FUEL OIL SYSTEM
AMM-21

THIS LRA DRAWING IS BASED ON AN UNAPPROVED SITE DRAWING

NO.	DATE	DESCRIPTION	BY	ENG	CHK	APP
0	6-14-06		-	-	-	-

REVISIONS

LRA-400881-0

CAD FILE
LRA-400881_NR.DGN

RASTER FILE
400881_0.CAL

REVISIONS					
REV	DESCRIPTION	DATE	BY	CHK'D	APP.
0	ISSUED FOR ER-04-2-095	05/27/05	WN	FE	FE

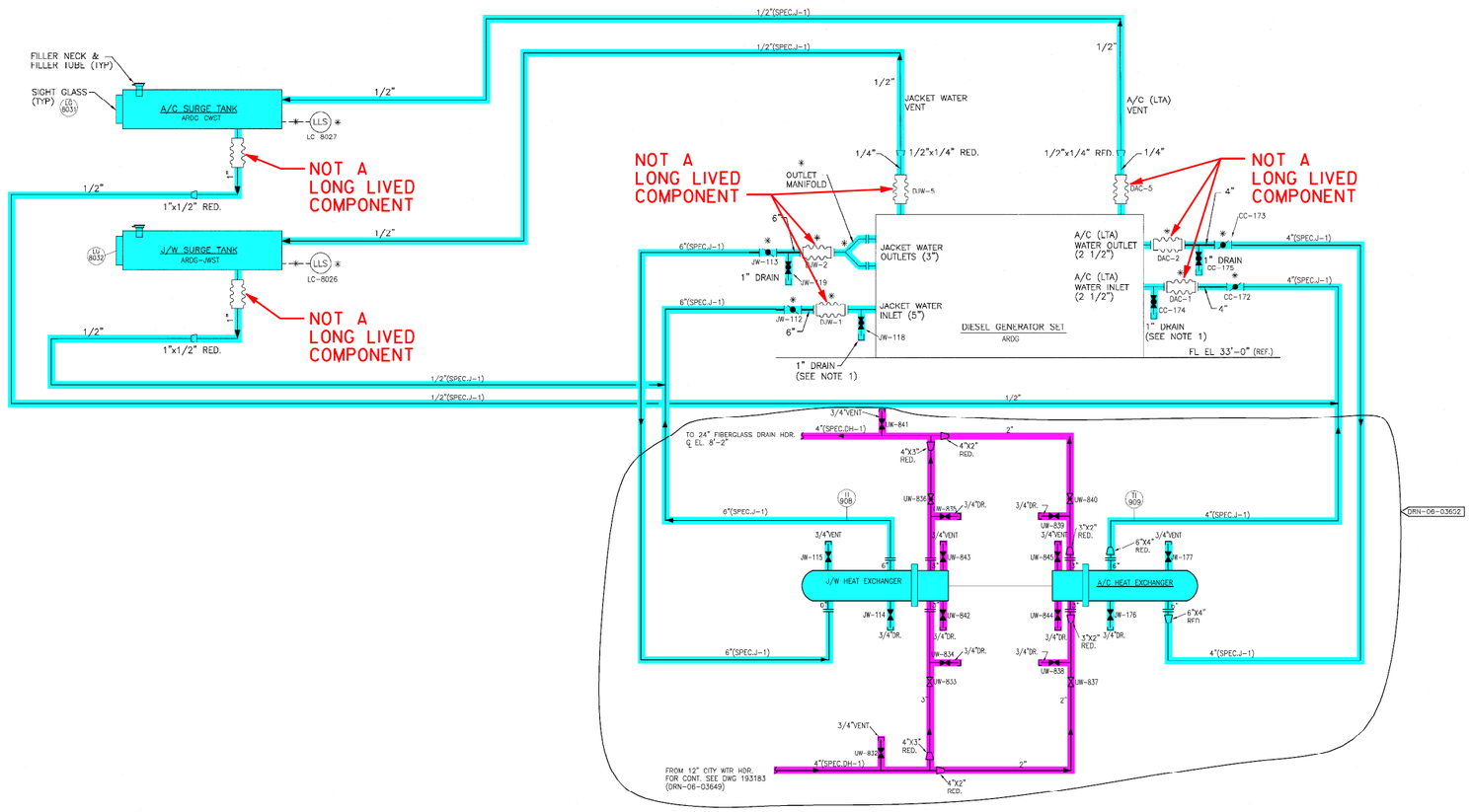

LEGEND

*	VENDOR SUPPLIED
	FLEXIBLE CONNECTOR
	BUTTERFLY VALVE
LLS	LOW LEVEL SWITCH

NOTES

1. THESE DRAIN CONNECTIONS ARE INTEGRAL TO THE FLANGED ELBOW ASSEMBLY AND WILL ALSO SERVE AS THE FILL CONNECTIONS FOR EACH COOLANT CIRCUIT.

☐ Before ☒ After	DRN No. 06-03652	Page 1 of 1	
DOC. No. 400882	SHT. No.	REV. 0	
ER-04-2-095	Superceded DRN No. DRN-05-00066		
Control Room Drawing? YES ☐ NO ☒	Resp. Auth. App. of Rev. Doc.? YES ☐ NO ☒		
ICN Required? YES ☒ NO ☐			
Prepared By: GH		Date	
Reviewed By:		Date	
Integ. Review (If Required)		Date	

SYSTEM INTENDED FUNCTION BOUNDARY

COMPONENTS SUBJECT TO AMR

CITY WATER SYSTEM AMM-04

STATION BLACKOUT AND APPENDIX R DIESEL GENERATOR SET AMM-20

INDIAN POINT ENERGY CENTER – UNIT 2

STATION BLACKOUT AND APPENDIX R DIESEL GENERATOR SET

DIESEL COOLING WATER SYSTEM MECHANICAL

Entergy Nuclear Northeast

DWG NO. 400882 REV 0

SCALE NONE SHEET

THIS LRA DRAWING IS BASED ON AN UNAPPROVED SITE DRAWING

NO.	DATE	DESCRIPTION	BY	ENG	CHK	APP
0	3-13-07	.	.	.	.	.

REVISIONS

LRA-400882-0

CAD FILE LRA-400882_NR1.DGN

MASTER FILE 400882_1.CAL

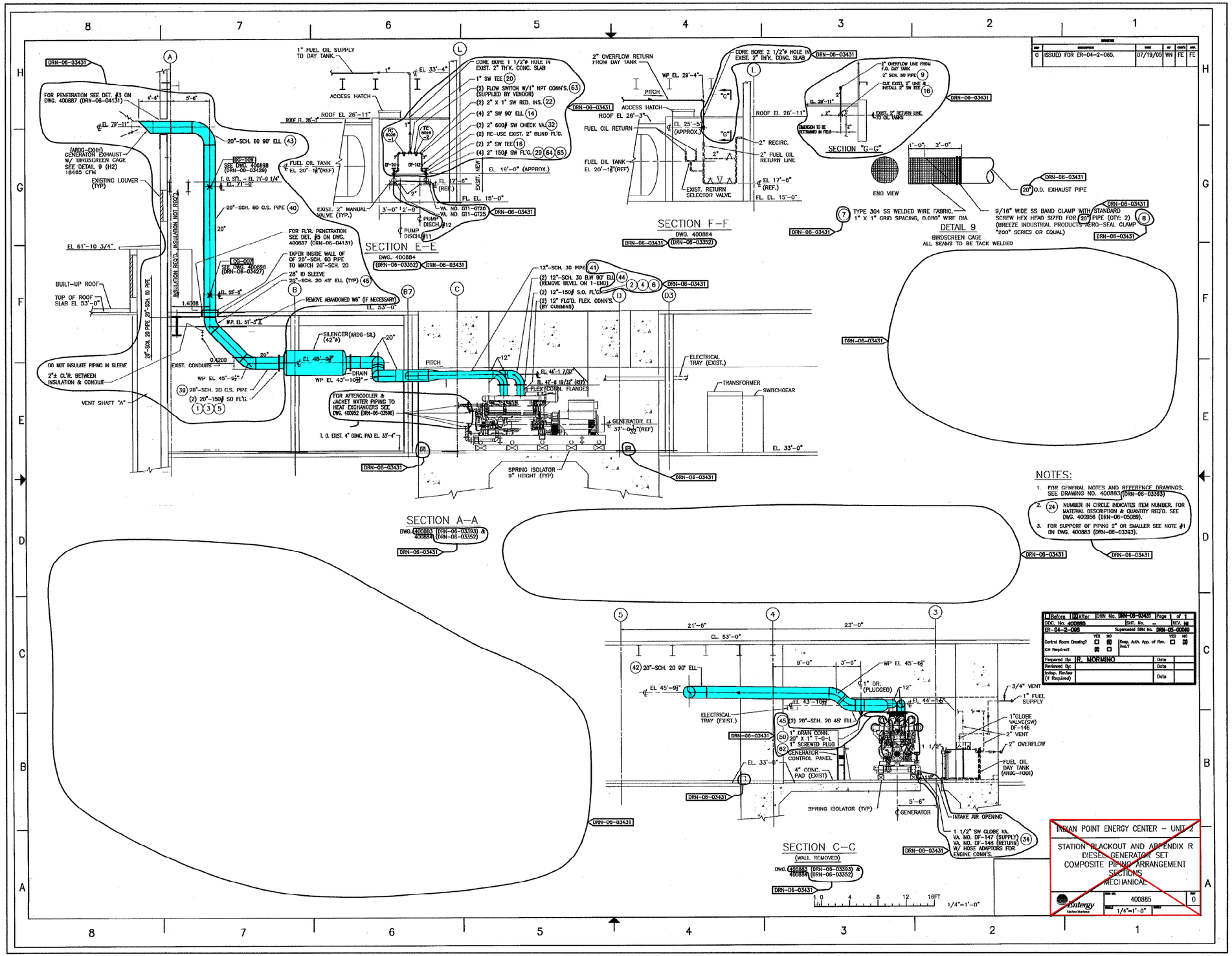

REV	DESCRIPTION	DATE	BY	CHK'D	APP.
0	ISSUED FOR ER-04-2-065.	07/19/05	WN	FE	FE

SYSTEM INTENDED FUNCTION BOUNDARY

COMPONENTS SUBJECT TO AMR

STATION BLACKOUT AND APPENDIX R DIESEL GENERATOR SET AMM-20

THIS LRA DRAWING IS BASED ON AN UNAPPROVED SITE DRAWING

NO.	DATE	DESCRIPTION	BY	ENG	CHK	APP
0	3-12-07	.	.	.	.	.

REVISIONS

LRA-400885-0

CAD FILE LRA-400885_NR1.DGN

MASTER FILE 400885_1.CAL

MECHANICAL

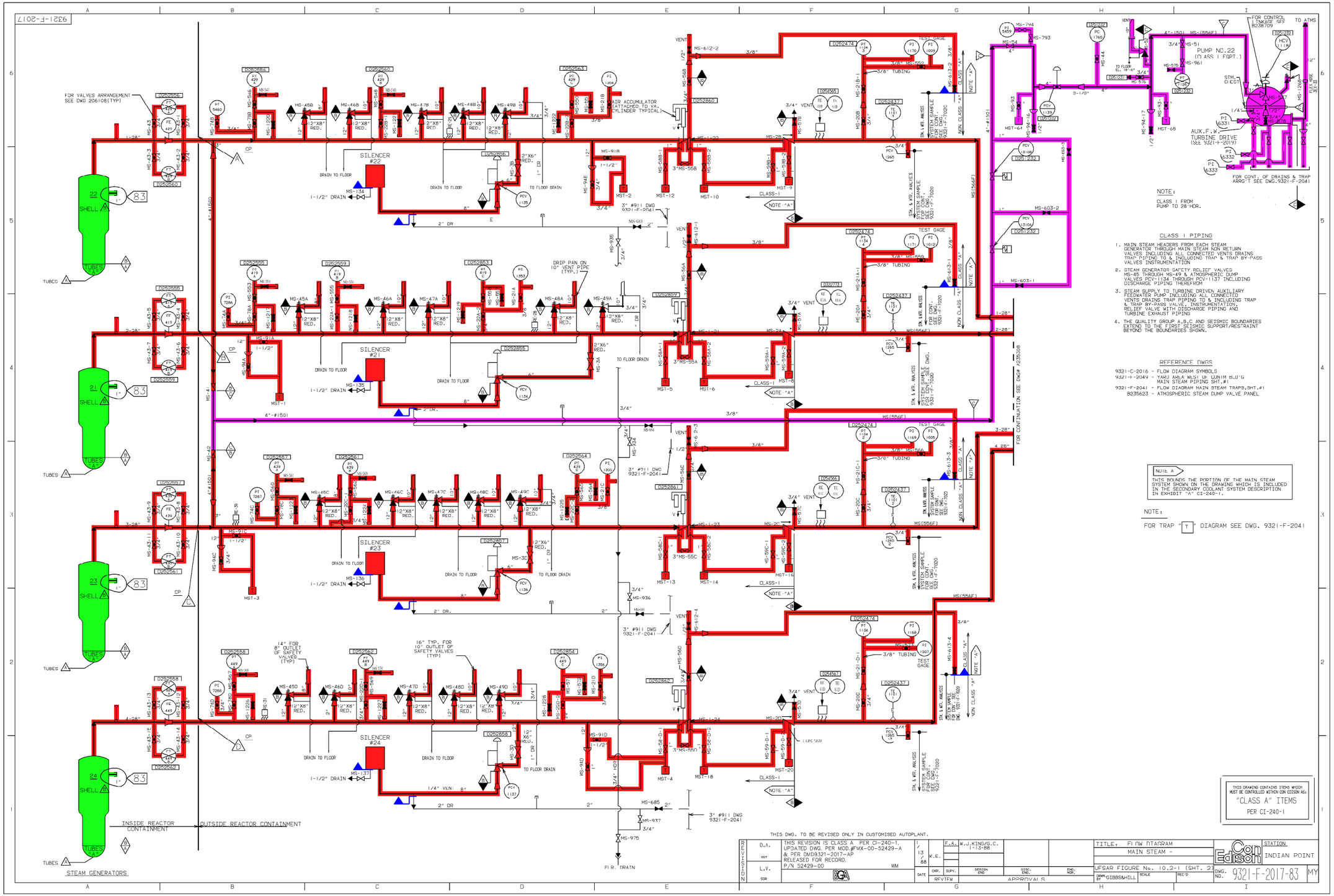

NOTE:

CLASS I FROM PUMP TO 28'HDR.

CLASS I PIPING

1. MAIN STEAM HEADERS FROM EACH STEAM GENERATOR THROUGH MAIN STEAM NON RETURN VALVES INCLUDING ALL CONNECTED VENTS DRAINS TRAP PIPING TO & INCLUDING TRAP & TRAP BY-PASS VALVES INSTRUMENTATION
2. STEAM GENERATOR SAFETY RELIEF VALVES MS-45 THROUGH MS-49 & ATMOSPHERIC DUMP VALVES PCV-1134 THROUGH PCV-1137 INCLUDING DISCHARGE PIPING THEREFROM
3. STEAM SUPPLY TO TURBINE DRIVEN AUXILIARY FEEDWATER PUMP INCLUDING ALL CONNECTED VENTS DRAINS TRAP PIPING TO & INCLUDING TRAP & TRAP BY-PASS VALVE, INSTRUMENTATION, RELIEF VALVE WITH DISCHARGE PIPING AND TURBINE EXHAUST PIPING
4. THE QUALITY GROUP A,B,C AND SEISMIC BOUNDARIES EXTEND TO THE FIRST SEISMIC SUPPORT/RESTRAINT BEYOND THE BOUNDARIES SHOWN.

REFERENCE DWGS

9321-C-2016 - FLOW DIAGRAM SYMBOLS
9321-F-2049 - YARD AREA WEST OF CONTM BLD'G MAIN STEAM PIPING SHT.#1
9321-F-2041 - FLOW DIAGRAM MAIN STEAM TRAPS,SHT.#1
B235623 - ATMOSPHERIC STEAM DUMP VALVE PANEL

NOTE A

THIS BOUNDS THE PORTION OF THE MAIN STEAM SYSTEM SHOWN ON THE DRAWING WHICH IS INCLUDED IN THE SECONDARY COOLANT SYSTEM DESCRIPTION IN EXHIBIT "A" CI-240-1.

NOTE:

FOR TRAP "T" DIAGRAM SEE DWG. 9321-F-2041

SYSTEM INTENDED FUNCTION BOUNDARY

COMPONENTS SUBJECT TO AMR

MAIN STEAM SYSTEM AMM-23

AUXILIARY FEEDWATER SYSTEM AMM-24

STEAM GENERATORS AMM-34

THIS DRAWING CONTAINS ITEMS WHICH MUST BE CONTROLLED WITHIN CON EDISON AS: "CLASS A" ITEMS PER CI-240-1

THIS DWG. TO BE REVISED ONLY IN CUSTOMISED AUTOPLANT.

REVISION						
D.A.	THIS REVISION IS CLASS A PER CI-240-1. UPDATED DWG. PER MOD.#FMX-00-52429-A & PER DMD9321-2017-AP RELEASED FOR RECORD. P/N 52429-00 WM	1/13/88	K.E.	F.A.	W.J.KING/G.C. 1-13-88	
L.V.						

TITLE: FLOW DIAGRAM MAIN STEAM - UFSAR FIGURE No. 10.2-1 (SHT. 2)

DRAWN BY GIBBS&HILL | SCALE | REC'D

Con Edison | STATION INDIAN POINT

DWG. NO. 9321-F-2017-83 | MY

NO.	DATE	DESCRIPTION	BY	ENG	CHK	APP
0	1-19-07	.	.	.	.	.

REVISIONS

LRA-9321-2017-0

CAD FILE LRA-9321-2017_83.DGN

MASTER FILE 9321-2017_83.CAL

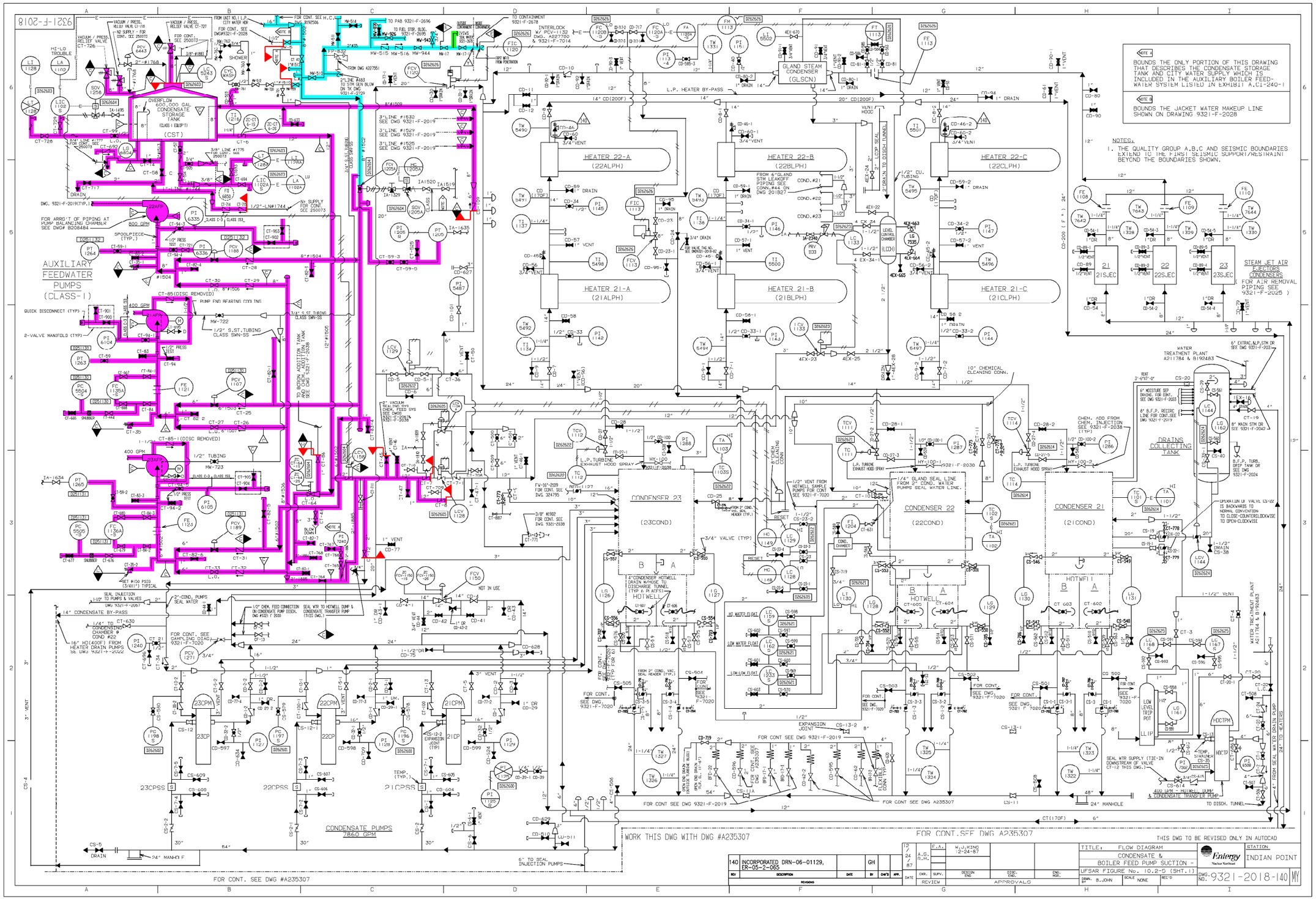

NOTE A
BOUNDS THE ONLY PORTION OF THIS DRAWING THAT DESCRIBES THE CONDENSATE STORAGE TANK AND CITY WATER SUPPLY WHICH IS INCLUDED IN THE AUXILIARY BOILER FEED-WATER SYSTEM LISTED IN EXHIBIT A.C1-240-1

NOTE B
BOUNDS THE JACKET WATER MAKEUP LINE SHOWN ON DRAWING 9321-F-2028

NOTES:
1. THE QUALITY GROUP A,B,C AND SEISMIC BOUNDARIES EXTEND TO THE FIRST SEISMIC SUPPORT/RESTRAINT BEYOND THE BOUNDARIES SHOWN.

SYSTEM INTENDED FUNCTION BOUNDARY

COMPONENTS SUBJECT TO AMR

- CONTAINMENT ISOLATION SYSTEM (HPC, IVSW, WCPS & WCCPP) AMM-02
- CITY WATER SYSTEM AMM-04
- AUXILIARY FEEDWATER SYSTEM AMM-24

REV	DESCRIPTION	DATE	BY	CHK'D	APP.
140	INCORPORATED DRN-06-01129, ER-05-2-065		GH		

REVISIONS

DATE	CKR.	SUPV.	DESIGN END	DISC. END.	ENG. MGR.
12/24/87	A.G. R.M.	F.A.	W.J.KING 12-24-87		

REVIEW — APPROVALS

TITLE: FLOW DIAGRAM CONDENSATE & BOILER FEED PUMP SUCTION - UFSAR FIGURE No. 10.2-5 (SHT.1)

DRWN. BY B.JOHN — SCALE NONE — REC'D

Entergy Nuclear Northeast

STATION: INDIAN POINT

DWG. NO. 9321-2018-140 MY

NO.	DATE	DESCRIPTION	BY	ENG	CHK	APP
0	1-2-07	.	.	.	.	.

REVISIONS

LRA-9321-2018-0

CAD FILE LRA-9321-2018_140.DGN

MASTER FILE 9321-2018_140.CAL

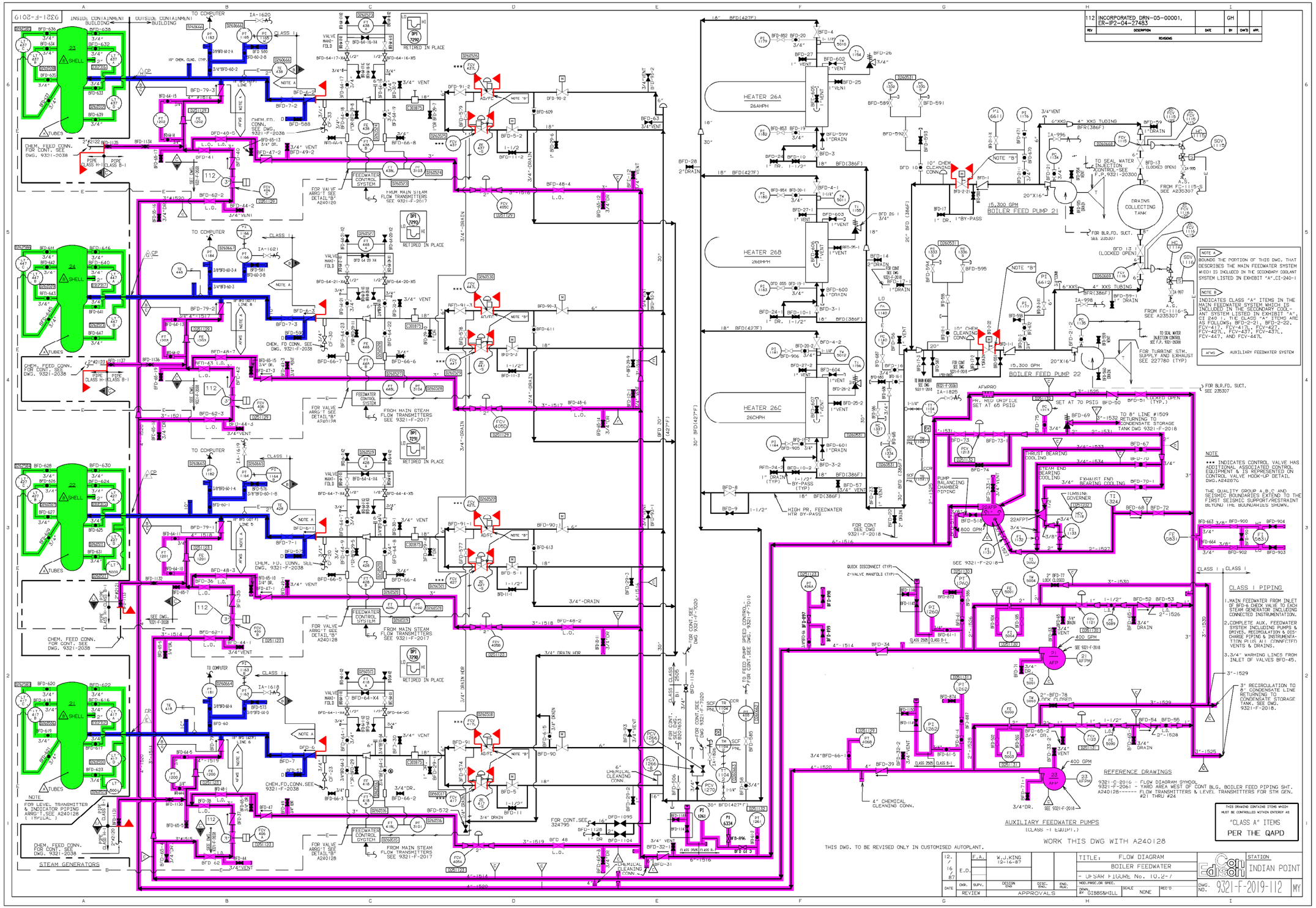
9321-F-2019
INSIDE CONTAINMENT BUILDING
OUTSIDE CONTAINMENT BUILDING
HEATER 26A
HEATER 26B
HEATER 26C
BOILER FEED PUMP 21
BOILER FEED PUMP 22
DRAINS COLLECTING TANK
FEEDWATER CONTROL SYSTEM
STEAM GENERATORS
AUXILIARY FEEDWATER PUMPS
(CLASS - I EQUIPT.)
REFERENCE DRAWINGS
9321-C-2016 - FLOW DIAGRAM SYMBOL
9321-F-2061 - YARD AREA WEST OF CONT BLG. BOILER FEED PIPING SHT.
A240128------ FLOW TRANSMITTERS & LEVEL TRANSMITTERS FOR STM GEN. #21 THRU #24
CLASS I PIPING
1.MAIN FEEDWATER FROM INLET OF BFD-6 CHECK VALVE TO EACH STEAM GENERATOR INCLUDING CONNECTED INSTRUMENTATION.
2.COMPLETE AUX. FEEDWATER SYSTEM INCLUDING PUMPS & DRIVES, RECIRCULATION & DISCHARGE PIPING & INSTRUMENTATION PLUS ALL CONNECTED VENTS & DRAINS.
3.3/4" WARMING LINES FROM INLET OF VALVES BFD-45.
NOTE A
BOUNDS THE PORTION OF THIS DWG. THAT DESCRIBES THE MAIN FEEDWATER SYSTEM WHICH IS INCLUDED IN THE SECONDARY COOLANT SYSTEM LISTED IN EXHIBIT "A".CI-240-1
NOTE B
INDICATES CLASS "A" ITEMS IN THE MAIN FEEDWATER SYSTEM WHICH IS INCLUDED IN THE SECONDARY COOLANT SYSTEM LISTED IN EXHIBIT "A", CI 240 - THE CLASS "A" ITEMS ARE AS FOLLOWS: BFD-2-21, BFD-2-22, FCV-417, FCV-417L, FCV-427, FCV-427L, FCV-437, FCV-437L, FCV-447, AND FCV-447L.
AFWG AUXILIARY FEEDWATER SYSTEM
NOTE
*** INDICATES CONTROL VALVE HAS ADDITIONAL ASSOCIATED CONTROL EQUIPMENT & IS REPRESENTED ON CONTROL VALVE HOOK-UP DETAIL DWG.A242076
THE QUALITY GROUP A,B,C AND SEISMIC BOUNDARIES EXTEND TO THE FIRST SEISMIC SUPPORT/RESTRAINT BEYOND THE BOUNDARIES SHOWN.
THIS DRAWING CONTAINS ITEMS WHICH MUST BE CONTROLLED WITHIN ENTERGY AS
"CLASS A" ITEMS
PER THE QAPD
WORK THIS DWG WITH A240128
THIS DWG. TO BE REVISED ONLY IN CUSTOMISED AUTOPLANT.
112 INCORPORATED DRN-05-00001, ER-IP2-04-27483
REVISIONS
TITLE: FLOW DIAGRAM
BOILER FEEDWATER
- UPSAR FIGURE No. 10.2-7
STATION INDIAN POINT
DWG. NO. 9321-F-2019-112
APPROVALS
REVIEW
SYSTEM INTENDED FUNCTION BOUNDARY
COMPONENTS SUBJECT TO AMR
AUXILIARY FEEDWATER SYSTEM AMM-24
MAIN FEEDWATER AMM-27
STEAM GENERATORS AMM-34
LRA-9321-2019-0
CAD FILE LRA-9321-2019_112.DGN
MASTER FILE 9321-2019_112.CAL

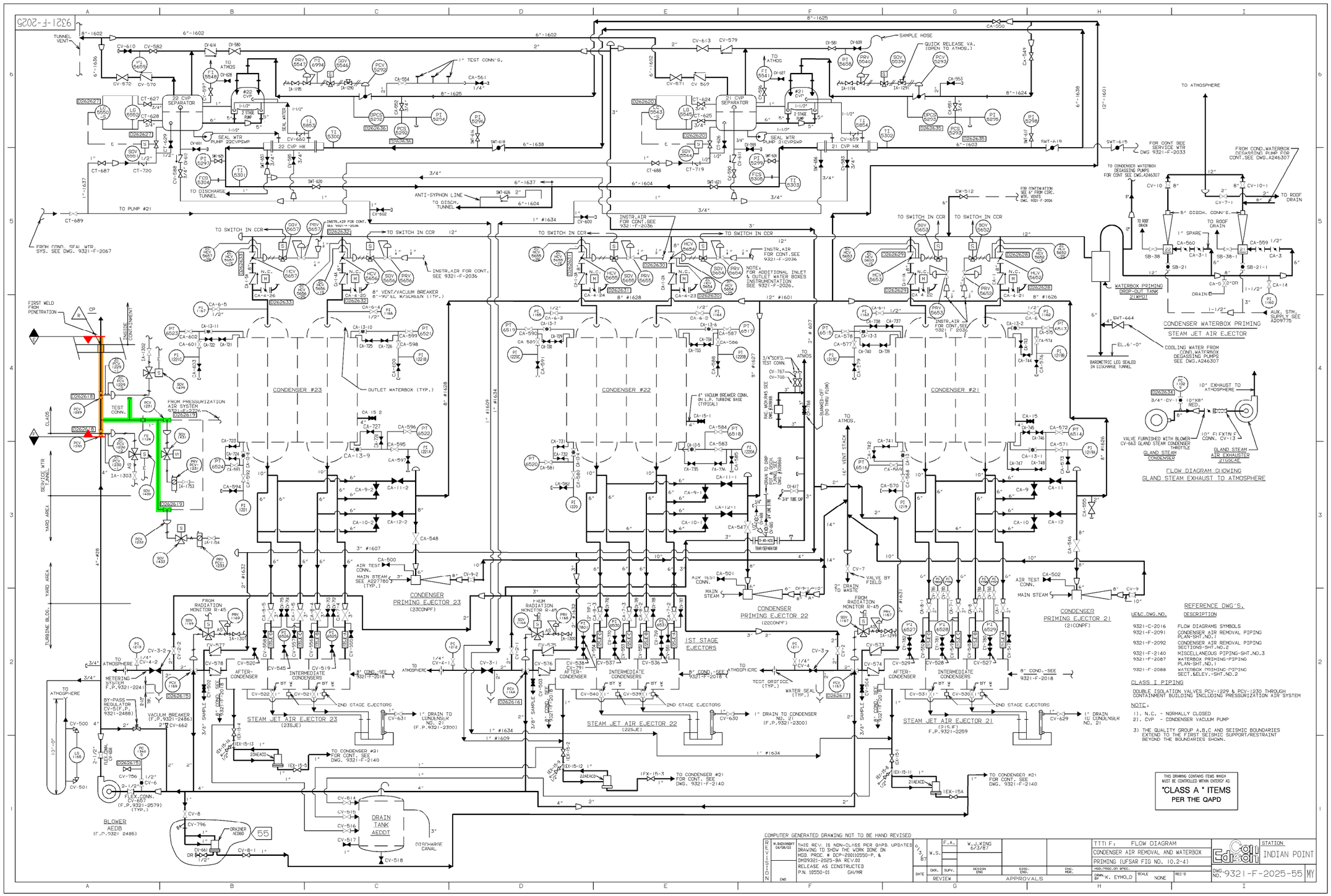

SYSTEM INTENDED FUNCTION BOUNDARY

COMPONENTS SUBJECT TO AMR

CONTAINMENT ISOLATION SYSTEM (HPC, IVSW, WCPS & WCCPP) AMM-02

CONTAINMENT PENETRATIONS AMM-26

NO.	DATE	DESCRIPTION	BY	ENG	CHK	APP
0	7-10-06					

REVISIONS

LRA-9321-2025-0

CAD FILE LRA-9321-2025_55.DGN

MASTER FILE 9321-2025_55.CAL