Dominion Energy Kewaunee, Inc.
5000 Dominion Boulevard, Glen Allen, VA 23060

Dominion®

June 12, 2007

U. S. Nuclear Regulatory Commission
Attention: Document Control Desk
Washington, DC 20555

Serial No. 06-598
KPS/LIC/GR: R3
Docket No. 50-305
License No. DPR-43

DOMINION ENERGY KEWAUNEE, INC.
KEWAUNEE POWER STATION
LICENSE AMENDMENT REQUEST - 217
REVISION TO REACTOR TRIP PERMISSIVE SETPOINTS

Pursuant to 10 CFR 50.90, Dominion Energy Kewaunee, Inc. (DEK) requests an amendment to Facility Operating License Number DPR-43 for the Kewaunee Power Station (KPS). The proposed amendment would:

- Revise the P-7 and P-10 permissive setpoints located in KPS Technical Specification (TS) Table 3.5-2, "Instrument Operation Conditions for Reactor Trip." These changes are necessary to ensure consistency between the plant settings and the TS requirements.
- Convert the TS Table 3.5-2 NOTES associated with permissives P-6, P-7, P-8, and P-10 into a tabular format that is consistent with the Westinghouse Standard Technical Specifications and add a footnote to this table explaining that the turbine impulse pressure setting limit is converted to an equivalent turbine impulse pressure.
- Revise TS 2.3, "Instrumentation System," paragraphs a.6.A and a.6.B, concerning reactor trip interlocks, to be consistent with the proposed changes to TS Table 3.5-2.

DEK has concluded that the proposed amendment involves a no significant hazards consideration as discussed in Attachment 1 to this letter. Attachment 1 contains a description, a safety evaluation, a significant hazards determination and environmental considerations for the proposed amendment. Attachment 2 contains the marked-up Technical Specification pages. Attachment 3 contains the proposed Technical Specification pages, as revised. Attachments 4 and 5 contain marked-up and revised TS Basis pages for information only.

DEK requests approval of the proposed amendment by March 31, 2008. Once approved, the amendment will be implemented within 60 days.

A001

NRC/NRR

The KPS Plant Operations Review Committee has approved this amendment request and a copy of this submittal has been provided to the State of Wisconsin in accordance with 10 CFR 50.91(b).

If you have any questions or require additional information, please contact Mr. Gerald Riste at (920) 388-8424.

Very truly yours,

Gerald T. Bischof
Vice President – Nuclear Engineering

Attachments:

1. Discussion of Change, Safety Evaluation, Significant Hazards Determination and Environmental Considerations
2. Marked Up Technical Specification Pages
3. Proposed Technical Specification Pages
4. Marked Up Technical Specification Basis Pages
5. Proposed Technical Specification Basis Pages

Commitments made in this letter: None

cc: Regional Administrator
U. S. Nuclear Regulatory Commission
Region III
2443 Warrenville Road
Suite 210
Lisle, Illinois 60532-4352

Ms. Margaret Chernoff
Project Manager
U.S. Nuclear Regulatory Commission
Mail Stop 8 G9A
Washington, D. C. 20555

NRC Senior Resident Inspector
Kewaunee Power Station

Public Service Commission of Wisconsin
Electric Division
P.O. Box 7854
Madison, WI 53707

COMMONWEALTH OF VIRGINIA)
)
COUNTY OF HENRICO)

The foregoing document was acknowledged before me, in and for the County and Commonwealth aforesaid, today by Gerald T Bischof, who is Vice President – Nuclear Engineering of Dominion Energy Kewaunee, Inc. He has affirmed before me that he is duly authorized to execute and file the foregoing document in behalf of that Company, and that the statements in the document are true to the best of his knowledge and belief.

Acknowledged before me this 12th day of June, 2007.

My Commission Expires: August 31, 2008.

Margaret B. Bennett
Notary Public

MARGARET B. BENNETT
Notary Public 354302
Commonwealth of Virginia
My Commission Expires Aug 31, 2008

(SEAL)

ATTACHMENT 1

LICENSE AMENDMENT REQUEST - 217
REVISION TO REACTOR TRIP PERMISSIVE SETPOINTS

DISCUSSION OF CHANGE, SAFETY EVALUATION, SIGNIFICANT HAZARDS DETERMINATION, AND ENVIRONMENTAL CONSIDERATIONS

KEWAUNEE POWER STATION

DOMINION ENERGY KEWAUNEE, INC.

**Kewaunee Power Station License Amendment Request 217,
Revision to Reactor Trip Permissive Setpoints**

Introduction

On June 20, 2005, with Kewaunee Power Station (KPS) in the refueling shutdown mode, it was determined that the setting for Permissive P-10 did not match the Technical Specification (TS) requirement of TS Table TS 3.5-2. This event was reported to the Nuclear Regulatory Commission (NRC) in KPS Licensee Event Report (LER) 2005-011 (reference 1). This proposed amendment will fulfill two of the corrective actions from LER 2005-011.

1.0 DESCRIPTION

This letter is a request to amend Facility Operating License DPR-43. The proposed amendment would:

- Revise the P-7 and P-10 permissive setpoints located in KPS Technical Specification (TS) Table 3.5-2, "Instrument Operation Conditions for Reactor Trip." These changes are necessary to ensure consistency between the plant settings and the TS requirements.
- Convert the TS Table 3.5-2 NOTES associated with permissives P-6, P-7, P-8 and P-10 into a tabular format that is consistent with the Westinghouse Standard Technical Specifications and add a footnote to this table explaining that the turbine impulse pressure setting limit is converted to an equivalent turbine impulse pressure.
- Revise TS 2.3, "Instrumentation System," paragraphs a.6.A and a.6.B, concerning reactor trip interlocks, to be consistent with the proposed changes to TS Table 3.5-2.

In addition, the KPS TS Basis associated with TS 2.3 and TS 3.5 are being revised to reflect the proposed changes above. The associated TS Basis changes are included as Attachments 4 and 5 for information.

2.0 PROPOSED CHANGE

Dominion Energy Kewaunee, Inc. (DEK) proposes to modify KPS TS 2.3.a.6, "Reactor Trip Interlocks," and Table TS 3.5-2, "Instrument Operation Conditions for Reactor Trip."

KPS TS 2.3.a.6, "Reactor Trip Interlocks," currently states:

"6. Reactor Trip Interlocks

Protective instrumentation settings for reactor trip interlocks shall be as follows:

A. Above 10% of RATED POWER, the low pressurizer pressure trip, high pressurizer level trip, the low reactor coolant flow trips (for both loops), and the turbine trip-reactor trip are made functional.

B. Above 10% of RATED POWER, the single loop loss-of-flow trip is made functional."

DEK proposes to change KPS TS 2.3.a.6 to state:

"6. Reactor Trip Interlocks

Protective instrumentation settings for reactor trip interlocks shall be as follows:

A. Prior to exceeding 12.2% of RATED POWER, the low pressurizer pressure trip, high pressurizer level trip, the low reactor coolant flow trips (for both loops), and the turbine trip-reactor trip are made functional.

B. Prior to exceeding 10% of RATED POWER, the single loop loss-of-flow trip is made functional."

The NOTES for KPS TS Table 3.5-2, "Instrument Operation Conditions for Reactor Trip," currently state:

"**P-6** 1 of 2 Intermediate Range Nuclear Instrument Channels indicates > 10^{-5}% power

P-7 3 of 4 Power Range Nuclear Instrument channels < 10% power AND 2 of 2 Turbine Impulse Pressure Channels < 10% power

P-8 3 of 4 Power Range Nuclear Instrument Channels < 10% power

P-10 2 of 4 Power Range Nuclear Instrument Channels > 10% power"

DEK proposes to change the KPS TS Table 3.5-2 NOTES associated with the permissives into a tabular format, modify the nuclear instrumentation setpoints for P-10 and P-7, change "power" to "RATED POWER", and add a footnote explaining that the

turbine impulse pressure setting limit is converted to an equivalent turbine impulse pressure as follows:

Permissive/Interlock	Channels	Coincidence	Setting Limit
P-6	Intermediate Range Nuclear Instrument	1 of 2	> 10^{-5} % RATED POWER
P-7	Power Range Nuclear Instrument	3 of 4 AND 2 of 2	≤ 12.2 % RATED POWER
	Turbine Impulse Pressure		≤ 12.2 % RATED POWER [(a)]
P-8	Power Range Nuclear Instrument	3 of 4	< 10 % RATED POWER
P-10	Power Range Nuclear Instrument	2 of 4	≥ 7.8 % RATED POWER

[(a)] Setting Limit is converted to an equivalent turbine impulse pressure.

In addition, DEK is revising the KPS TS Basis associated with TS sections 2.3, "Limiting Safety System Settings - Protective Instrumentation," and 3.5, "Instrumentation System." These TS basis changes are included as Attachments 4 and 5 for information.

3.0 BACKGROUND

Permissives P-7, P-8, and P-10 are part of the KPS Nuclear Instrumentation (NI) system that is described in KPS Updated Safety Analysis Report (USAR) Section 7.4, "Nuclear Instrumentation." These permissive setpoints have been set at approximately 10% reactor power since initial licensing of the plant.

On June 20, 2005, with the station in refueling shutdown mode, it was determined that the setting for permissive P-10 did not meet the Technical Specification requirement. The nuclear power range channel calibration surveillance procedures directed the permissive P-10 setting to be 9.5% +/- 0.5% of reactor power with a reset of 7.5% +/- 0.5% reactor power. Technical Specification Table 3.5-2, "Instrument Operation Conditions for Reactor Trip," lists the permissible bypass condition for P-10 as 2 of 4 power range nuclear instrument channels at greater than 10% reactor power. Consequently, KPS Technical Specification 3.5 had not been met because the actual setting for permissive P-10 was 9.5% +/- 0.5% reactor power, which did not meet the requirement of Table TS 3.5-2 (greater than 10% reactor power).

An evaluation was performed to determine the significance of having the permissive P-10 setting at 9.5% reactor power and the reset at 7.5% reactor power.

The effect of the reduction in the P-10 setpoint was that the NI Intermediate Range (IR) and Power Range (PR) associated reactor trips could be blocked at ≥ 9% (9.5% - 0.5%) power instead of ≥ 10% power and that the at-power trips would have been enabled when ≥ 9% power instead of ≥ 10% power. Thus, the reactor was always protected because operators still had verification that the PR NIs were operating before blocking the NI trips and the at-power trips were enabled at a lower power level. A review of past surveillance procedures, which verified and adjusted the setting for permissive P-10, revealed that the prescribed setting had not changed since April of 1974.

It was concluded from this evaluation that there were no actual nuclear or radiological consequences from this condition. The only accident in the Updated Safety Analysis Report (USAR) that has a 10% power starting point is an Uncontrolled Rod Cluster Control Assembly (RCCA) Withdrawal at Power. Review of the USAR Section 14 safety analyses and discussions with Westinghouse indicated that the safety analysis was not adversely affected by having the P-10 setting at 9.5% reactor power and the reset at 7.5% reactor power.

The identification of this condition was reported to the NRC as KPS LER 2005-011 (reference 1).

Two of the corrective actions developed from the investigation of this condition were:

- Align the KPS Technical Specifications with the model of the Westinghouse Standard Technical Specification for the P-10 permissive, and;
- Revise the KPS Technical Specification Basis sections to ensure all licensing basis functions of the P-10 permissive are clearly described.

This proposed change addresses these corrective actions. The proposed change also revises the TS setpoints for the P-7 permissive, to ensure consistency between the plant settings and the TS requirements, and revises TS 2.3, "Instrumentation System," paragraphs a.6.A and a.6.B concerning reactor trip interlocks to be consistent with the proposed changes to TS Table 3.5-2.

4.0 TECHNICAL ANALYSIS

In the following discussion the terms permissive, interlock, and permissible bypass condition are used. The functions listed as P-6, P-7, P-8, and P-10 are considered permissives (they grant or make input logic to something that grants consent). Although both are designated as a permissive, P-7 and P-8 perform their functions automatically and are referred to as an interlock (an arrangement in which the operation of one part or mechanism automatically brings about or prevents the operation of another). P-6 and

P-10 grant consent to block certain reactor trips when reactor power exceeds a predefined level and automatically reinstate the blocked trips when reactor power decreases below a predefined level. Therefore, in the discussion that follows, the terms permissive and interlock are sometimes used interchangeably.

"Permissible Bypass Conditions" defines the condition(s) that must be present to allow the trip function to be bypassed. Under these conditions, a shunt may be placed around the trip function negating the trip function.

The primary design function of the NI system is to protect the reactor by monitoring neutron flux and generating appropriate trips and alarms for various phases of reactor operating and shutdown conditions. The NI system design also provides a control function and indication of reactor status during startup and power operation. The NI system consists of eight channels: two source range, two intermediate (wide) range, and four power range channels.

The NI system monitors the neutron flux level outside the reactor using information from three instrumentation ranges to provide three discrete protection levels. Each range of instrumentation (source, intermediate, and power) provides the necessary reactor flux monitoring capability and overpower protection required during operation in that range. The Source Range (SR) covers the first six decades of reactor neutron flux. The Intermediate Range (IR) covers the entire range of reactor neutron flux, overlapping both the source and power ranges. The Power Range (PR) covers approximately the upper two decades of the intermediate range. The overlap of instrumentation ranges provides reliable continuous protection through all reactor flux levels.

The NI system provides control room indication and recording of signals proportional to reactor neutron flux during core loading, shutdown, startup and power operation, as well as during refueling operations. Startup rate indication for the source and intermediate range channels is provided at the control board. Reactor trip, rod stop, controls and alarm signals are transmitted to the Reactor Control and Protection system for automatic plant control.

Various control and alarm functions are obtained from the three ranges of nuclear instrumentation during shutdown, startup, and power operation. These functions are used to alert the operator of reactor conditions that may require administrative action and to alert personnel of unsafe reactor conditions. They also provide signals to the rod control system for automatic blocking of rod withdrawal during plant operation to avoid unnecessary reactor trips. An overpower rod stop function from any of the four PR channels inhibits rod withdrawal and is alarmed at the control board.

The PR channels also provide a visual indication when two-out-of-four channels exceed the permissive P-10 level. The P-10 permissive ensures proper overlap exists between the intermediate range channels and the power range channels before the intermediate range (IR) high flux trip and power range low range flux trip can be blocked. Permissive P-10 alerts control room operators to take action to block the IR high flux trip and PR

low range flux trip before any further power increase. The PR channels also provide an input to the P-7 permissive, which provides for blocking reactor trips at low reactor power levels to allow plant startup and shutdown.

Permissive P-8 is provided for blocking a single primary loop loss-of-flow reactor trip at low power to allow plant startup and shutdown. The power range neutron flux, P-8 interlock is actuated when reactor power decreases below approximately 10% power as determined by three-out-of-four NIS power range detectors. When reactor power increases to above approximately 10% power, the P-8 interlock automatically enables the reactor coolant system low flow (single loop) and reactor coolant pump (RCP) breaker position (single loop) reactor trips. The TS requirement for this trip function ensures that protection is provided against a loss of flow in any RCS loop that could result in departure from nucleate boiling (DNB) conditions in the core when the reactor power is greater than approximately 10% power.

P-7 Functions

The following reactor trips are blocked by P-7:

- Pressurizer Low Pressure: This trip function ensures that protection is provided against violating the DNBR limit due to low RCS pressure. Below the P-7 setpoint, no conceivable power distributions can occur that would cause DNB concerns.

- Pressurizer High Water Level: This trip function provides a backup signal for the Pressurizer Pressure - High trip and provides protection against water relief through the pressurizer safety valves. Below the P-7 setpoint, transients that could raise the pressurizer water level will be slow and the operator will have sufficient time to evaluate unit conditions and take corrective actions.

- Reactor Coolant Low Flow – Both Loops: This reactor trip function ensures that protection is provided against violating the DNBR limit due to low flow in both RCS loops, while avoiding reactor trips due to normal variations in loop flow. Below the P-7 setpoint, all reactor trips on reactor coolant low flow are automatically blocked since there is insufficient heat production in the reactor to generate DNB conditions.

- RCP Breaker Position: This trip function ensures that protection is provided against violating the DNBR limit due to a loss of flow in both RCS loops. Below the P-7 setpoint, all reactor trips on loss of flow are automatically blocked since no conceivable power distributions could occur that would cause a DNB concern below this power level.

  Although this reactor trip feature (RCP Breaker Position) is blocked below the P-7 setpoint, KPS administratively requires both RCPs to be operating if the

reactor trip breakers are closed, unless the RCS is borated to the cold shutdown boron concentration.

- RCP Bus Undervoltage: This reactor trip function ensures that protection is provided against violating the DNBR limit due to a loss of flow in both RCS loops. Below the P-7 setpoint, all reactor trips on loss of flow are automatically blocked since no conceivable power distributions could occur that would cause a DNB concern below this power level.

- Turbine Trip – Reactor Trip: This reactor trip function ensures that protection is provided against violating the DNBR limit due to excessive feedwater flow causing a reactivity feedback that results in a power increase. A turbine trip, which results in a reactor trip, is actuated when the steam generator water level in either steam generator reaches the High-High water level setpoint. Below the P-7 setpoint, the PR high flux – low setpoint and the IR high flux reactor trips are enabled limiting the power increase and preventing a DNB concern.

P-8 Functions

At KPS, the P-8 setpoint is approximately the same as the P-7 setpoint. As reactor power increases, the Power Range Neutron Flux P-8 interlock is actuated at approximately 10% power, as determined by two-out-of-four NI power range channels. The P-8 interlock automatically enables the Reactor Coolant Low Flow (Single Loop) and RCP Breaker Position (Single Loop) reactor trips on low flow in either RCS loop. These trip functions ensure that protection is provided against DNB conditions on a loss of flow in any RCS loop when the reactor is at greater than approximately 10% power.

As reactor power decreases below approximately 10% power (three-out-of-four PR channels less than 10% power) the P-8 interlock automatically blocks the Reactor Coolant Low Flow (Single Loop) and RCP Breaker Position (Single Loop) trips.

P-10 Functions

The P-10 permissive ensures that the following functions are performed:

- On increasing power, the P-10 permissive allows the operator to manually block the Intermediate Range Neutron Flux reactor trip. Note that blocking this reactor trip also blocks the signal to prevent automatic and manual rod withdrawal.
- On increasing power, the P-10 permissive allows the operator to manually block the Power Range High Flux–Low Setpoint reactor trip.
- On increasing power, the P-10 interlock automatically provides a backup signal to block the Source Range Neutron Flux reactor trip.
- The P-10 interlock provides one of the two inputs to the P-7 interlock.

- On decreasing power, the P-10 permissive automatically enables the Power Range High Flux-Low Setpoint reactor trip and the Intermediate Range High Flux reactor trip (and rod stop).

P-10 and P-7 Setpoints

A logic drawing for permissives P-10 and P-7 is shown in Figure 1. Permissive P-10 and P-7 use the same logic relays but operate through different logic matrices and permissive relays. The difference between the P-10 and P-7 circuits is that the permissive relays for permissive P-10 de-energize to allow blocking the intermediate range and certain power range reactor trips while the P-7 permissive relays de-energize to enable the at-power reactor trips.

Using the setpoints listed in Figure 1, when two-of-four Power Range NI channels are greater than 11% power, a signal is sent to the P-10 and the P-7 permissives. This signal allows manual blocking of the IR NI channels High Flux reactor trip, manual blocking of the PR High Flux Low Setpoint reactor trip, and automatically enables the at-power trips. When two-of-four energized logic is not true (i.e., at least three-of-four NI channels less than 9% power) the signal is removed from P-10 and P-7, and unblocks the associated PR and IR channels reactor trips and automatically blocks the at-power trips, provided turbine impulse pressure is less than 6.6% power.

The four NI channels provide an input to the P-10 relay. As reactor power is increased to above 11%, the P-10 relay provides an output (when two of the four NI channels exceed the relay setpoint) to permit manual blocking of the IR High Flux and PR High Flux Low Setpoint reactor trips and an input to the P-7 relay, which enables the trips listed in TS 2.3.a.6.A. Note that the P-7 relay may already be activated if a turbine impulse pressure switch exceeds its setpoint before the NI channel bistables exceed their setpoint. Therefore, before exceeding 12.2% rated power, the at-power reactor trips are unblocked and manual blocking of the IR High Flux and PR High Flux Low Setpoint reactor trips is permitted.

On decreasing reactor power, when three-of-four P-10 relays reset (less than 9.0% rated power) the P-10 permissive is no longer satisfied and the IR High Flux and PR High Flux Low Setpoint reactor trips are unblocked while the trips blocked by P-7 are automatically blocked, provided the turbine impulse pressure circuit indicates impulse pressure is less than its reset point.

Because both the P-7 and P-10 circuits use the same logic relays, the settings for permissive P-10 and P-7 cannot be identical since one permissive operates from the set function of the logic relays while the other operates from the reset function of the logic relays. Based on this inherent difference in relay operation, a setpoint band is needed to allow proper setting of the permissives while maintaining the nominal 10% reactor power setpoint used since initial plant start up.

DEK has performed a calculation to determine the P-10 and P-7 setpoint uncertainties. The proposed change to TS Table 3.5-2 permissives P-10 and P-7 equates to a high setting limit of 12.2% with a low setting limit of 7.8%. The calculation results show that the loop drift of the NI instrumentation is +/- 0.67%. After adjusting the setting limits for instrumentation loop drift and using 2% for the relay set to reset difference (the actual plant setting for the relays to close is at 11% and open at 9%) a margin of 0.53% remains between the setting limits and the actual plant setpoints. Figure 2 shows the proposed setpoints, uncertainties, and margins for the P-10 and P-7 relays.

The proposed new setting limits for the permissives are specified in Table TS 3.5-2. The relay set and reset functions must occur within the range of the "setting limits" as specified in Table 3.5-2, for acceptable plant operation.

Changes to TS 2.3.a.6.A are proposed which state that prior to exceeding 12.2% of RATED POWER, the Low Pressurizer Pressure trip, High Pressurizer Level trip, the Low Reactor Coolant Flow trips (for both loops), and the Turbine Trip-Reactor Trip are made functional. This function is performed by P-7.

Changes to TS 2.3.a.6.B are proposed which state that prior to exceeding 10% of RATED POWER, the Single Loop Loss-of-Flow trip is made functional. This function is performed by P-8.

The proposed change to add the word "RATED" to the Notes table associated with TS Table 3.5-2 is to clarify that the setting limits are in units of percent of steady state reactor core output, as defined in KPS T.S. 1.0.M, "RATED POWER."

Transient and Accident Analysis

The only accident in the KPS Updated Safety Analysis Report (USAR) that is potentially affected by the proposed change is an Uncontrolled Rod Control Cluster Assembly (RCCA) Withdrawal at Power (RWAP) (see KPS USAR Section 14.1.2). The safety analysis for this event assumes that the low power nuclear instrument (NI) trips have been blocked and concludes a reactor trip would occur on either the NI High Neutron Flux or Over-temperature Delta Temperature (OTΔT) reactor trip.

The primary acceptance criterion for the RWAP event is to demonstrate that the minimum calculated DNBR is always greater than the safety analysis limit value. The analysis considers a wide range of initial power levels (10%, 60%, and 100% power) and a large range of reactivity insertion rates. The low end of the power range considered is based on the lowest initial power level at which the low setting of the High Neutron Flux reactor trip can be manually bypassed (i.e., the P-10 permissive setpoint) nominally set at 10% power. As demonstrated in KPS RWAP analyses, the combination of the Over-temperature Delta Temperature and High Neutron Flux (high setting) reactor trips provides protection such that DNBR remains above the limit for all cases. The limiting result occurs for the full power case; however, the results show that

the minimum DNBR at each analyzed power level is not much different from the full power result.

Based on evaluation of the RWAP safety analysis from the various initial power levels, reducing the minimum power level at which the permissive P-10 would actuate (due to reducing the setpoint to its minimum of 7.8% power) would not change the conclusion that minimum DNBR will always be greater than the safety analysis limit.

Assuming a maximum KPS reactivity insertion rate (simultaneous withdrawal of two sequential RCCA banks at maximum speed with maximum differential rod worth), from an initial reactor power level of 8%, the peak RCS pressure reached would be about 2620 psia. This peak pressure is about 130 psi below the KPS RCS overpressure limit of 2750 psia. Sensitivity analysis of the effect of initial reactor power level on the RWAP analysis overpressure results showed that an initial power level of 8% resulted in a maximum increase in the peak RCS pressure of only 13 psi, compared to an initial 12% power case. Therefore, given the large margin to the overpressure limit for the limiting case (initial power level of 8%) compared to the small sensitivity to initial power level, it is concluded that acceptable results would be obtained for KPS with an initial power level at 7.8% power.

The reactor trips on low RCS flow, reactor coolant pump (RCP) breaker opening, RCP bus undervoltage and underfrequency, turbine trip, low pressurizer pressure, and high pressurizer level are blocked below the P-7 permissive, nominally 10% power. The P-7 permissive blocks these trips when both the nuclear instrumentation system (NIS) P-10 permissive and the turbine impulse chamber pressure are below their setpoint. The RWAP analysis does not explicitly credit any of these reactor trip functions. However, implicit credit is taken for the high pressurizer level trip to prevent pressurizer overfill and subsequent water relief should this be challenged and the other reactor trips do not actuate first to prevent it. There would be no adverse impact on the RWAP from having a lower P-10 permissive reset, and thus a lower P-7 permissive reset, of 7.8% power.

Standard Technical Specification Comparison

NUREG 1431, "Standard Technical Specification – Westinghouse Plants" (STS) (reference 2) contains a similar specification in STS Section 3.3.1, "Reactor Trip System (RTS) Instrumentation." STS Table 3.3.1-1 (page 4 of 7), "Reactor Trip System Instrumentation," item 18, "Reactor Trip System Interlocks," provides applicability, required channels, conditions, surveillance requirements, allowable values, and nominal trip setpoints for interlocks P-7, P-8, P-10, and P-13. The major difference in how Kewaunee's custom TS (CTS) are applied (versus STS) is that Kewaunee's CTS refer to these features as "Permissible Bypass Conditions," whereas STS refer to these features as "Interlocks."

For an example of the "Permissible Bypass Condition" and the "Interlock" difference, refer to Kewaunee CTS TS Table 3.5-2, item 2, "Nuclear Flux Power Range – Low

Setting," and STS Table 3.3.1-1, item 2(b), "Power Range Neutron Flux – Low." In the Kewaunee CTS the nuclear flux power range low setting has a permissible bypass condition listed as permissive P-10. When permissive P-10 is satisfied the nuclear flux power range low setting reactor trip function can be bypassed. This request proposes to change the definition of permissive P-10 to ≥ 7.8% reactor power. Therefore, anytime reactor power is greater than or equal to 7.8% the nuclear flux power range low setting can be bypassed (i.e., it can be blocked).

With STS, the applicable modes or other specified conditions for the power range neutron flux – low is "1[(b)], 2." The one (1) or two (2) designations identify the applicable modes (1 = Power Operation, > 5% rated thermal power; 2 = Startup, ≤ 5% rated thermal power and keff ≥ 0.99). Note (b) states:

"(b) Below the P-10 (Power Range Neutron Flux) interlocks."

In STS, the specification for P-10 (Table 3.3,1-1, item 18.e.) lists an allowable value and a nominal trip setpoint. Below is an excerpt from the STS.

STS Table 3.1.1-1, Item 18.e		
Function	Allowable Value	Nominal[(a)] Trip Setpoint
Power Range Neutron Flux, P-10	≥ [7.8]% RTP and ≤ [12.2]% RTP	[10]% RTP

- REVIEWERS NOTE -

(a) Unit specific implementations may contain only Allowable Value depending on Setpoint Study Methodology used by the unit.

Referring to the Power Range Neutron Flux – Low applicable modes or other specified conditions, Note (b), and the P-10 allowable value, the conclusion is that when reactor power is greater than or equal to 7.8% rated thermal power (RTP), the Power Range Neutron Flux – Low function is not required to be operable (i.e., it can be blocked).

Additionally, the above STS excerpt contains a "Reviewer's Note" stating that some units TS may only contain an allowable value. This proposed change is similar in nature to that statement. The similarity is that Kewaunee CTS currently contain what could be considered the "Nominal Trip Setpoint" (10% reactor power). This proposed change would allow maintaining a nominal trip setpoint of approximately 10% by changing the technical specifications to model the allowable value by adding a band for the setting limit. The permissive P-10 nominal trip setpoint would be bounded by the lower limit of the permissive P-10 value contained in the TS Table 3.5-2 NOTE permissive table for Kewaunee (7.8% reactor power) and bounded by the upper limit of the P-7 power range nuclear instrument value (12.2% reactor power) (refer to Figure 2).

Another difference between STS and KPS CTS is a permissive designated P-13. In KPS CTS, one of the inputs to P-7 is the turbine impulse pressure channels (TS Table 3.5-2, page 4 of 4). The KPS turbine impulse pressure channels are similar to STS Table 3.3.1-1, item 18.f, "Turbine Impulse Pressure - P-13." The proposed change to KPS TS for the turbine impulse pressure channel setting is ≤ 12.2% rated power which is consistent with STS Table 3.3.1-1, item 18.f, "Turbine Impulse Pressure - P-13," allowable value of ≤ 12.2% turbine power.

Thus, the proposed change to Kewaunee CTS associated with the reactor protection system trip permissives/interlocks is consistent with STS for Westinghouse plants (reference 2).

5.0 REGULATORY SAFETY ANALYSIS

5.1 No Significant Hazards Consideration

Dominion Energy Kewaunee, Inc. (DEK) proposes to change the KPS TS to state that the at-power trips (TS 2.3.a.6.A) and the single loop loss-of-flow trip (TS 2.3.a.6.B) are to be made functional prior to exceeding 12.2% and 10% of rated power, respectively. Additionally, the proposed change provides a band for setting the reactor trip permissives and provides this band in a table format that is consistent with NUREG 1431, "Standard Technical Specifications – Westinghouse Plants," revision 3.

DEK has evaluated whether or not a significant hazards consideration is involved with the proposed amendment(s) by focusing on the three standards set forth in 10 CFR 50.92, "Issuance of amendment," as discussed below:

1. Does the proposed amendment involve a significant increase in the probability or consequences of an accident previously evaluated?

Response: No.

The proposed amendment does not change the probability or consequences of any previously evaluated accidents in the KPS updated safety analysis report (USAR). The proposed amendment would modify the TS setpoint values for the P-7 and P-10 permissives. The actual plant settings will continue to be approximately 10% of rated reactor power. The reactor protection system (RPS) is designed to monitor various plant parameters and initiate a reactor trip in the event these parameters are outside predetermined limits. The RPS is not an accident initiator and therefore, changing the setpoints for these permissives will not increase the probability of an accident previously evaluated.

The proposed amendment would add a setpoint band to the current TS required settings for permissive P-7 and P-10 to accommodate proper setting of the permissives.

The only previously evaluated accident that is potentially affected by the proposed changes is the Uncontrolled Rod Cluster Assembly Rod Withdrawal At-Power (RWAP) accident analysis. The effects of these setpoint changes have been evaluated and determined not to have a significant effect on the consequences of the RWAP accident analysis results. The acceptance criteria for the RWAP accident analysis continue to be met. Therefore the proposed changes would not increase the consequences of an accident previously evaluated.

Therefore, the proposed amendment does not involve a significant increase in the probability or consequences of an accident previously evaluated.

2. Does the proposed amendment create the possibility of a new or different kind of accident from any accident previously evaluated?

Response: No.

The proposed amendment modifies the TS setpoint values for permissives P-7 and P-10. The actual plant settings will continue to be approximately 10% power. The proposed changes affect the power level at which RPS trip functions are enabled or blocked to ensure proper operation of the RPS. The changes do not add any new systems, structures or components (SSCs) or physically modify any existing SSCs with the possibility of creating a new accident.

The proposed amendment does not functionally affect the operation of any SSC important to safety or its ability to perform its design function. Additionally, the proposed amendment does not create the possibility of a new or different kind of accident due to credible new failure mechanisms, malfunctions, or accident initiators not considered in the design and licensing bases.

Therefore, the proposed amendment does not create the possibility of a new or different kind of accident from any previously evaluated.

3. Does the proposed amendment involve a significant reduction in a margin of safety?

Response: No.

The proposed amendment would add a setpoint band to the current TS required settings for permissives P-7 and P-10 to accommodate proper setting of the permissives. The safety function of the nuclear instrumentation system and the affected permissives are not affected by this proposed change. The only safety analysis in the KPS USAR potentially affected by these proposed changes is the Uncontrolled Rod Cluster Assembly Rod Withdrawal At-Power (RWAP) event analysis. Evaluation of the RWAP event analysis results demonstrated that the RWAP would not have a significant effect on a margin of safety.

The effects of the proposed change have been evaluated and all safety analysis acceptance criteria will continue to be met.

Therefore, the proposed amendment does not involve a significant reduction in a margin of safety.

Based on the above, DEK concludes that the proposed amendment presents no significant hazards consideration under the standards set forth in 10 CFR 50.92(c), and, accordingly, a finding of "no significant hazards consideration" is justified.

5.2 Applicable Regulatory Requirements/Criteria

The US Atomic Energy Commission (AEC) issued their Safety Evaluation (SE) for the Kewaunee Power Station (KPS) on July 24, 1972 with supplements dated December 18, 1972 and May 10, 1973. The AEC's SE, section 3.1, "Conformance with AEC General Design Criteria," described the conclusions the AEC reached associated with the General Design Criteria in effect at the time. The AEC stated:

> *"The Kewaunee plant was designed and constructed to meet the intent of the AEC's General Design Criteria, as originally proposed in July 1967. Construction of the plant was about 50% complete and the Final Safety Analysis Report (Amendment No. 7) had been filed with the Commission before publication of the revised General Design Criteria in February 1971 and the present version of the criteria in July 1971. As a result, we did not require the applicant to reanalyze the plant or resubmit the FSAR. However, our technical review did assess the plant against the General Design Criteria now in effect and we are satisfied that the plant design generally conforms to the intent of these criteria."*

As such, the appropriate General Design Criterion is listed below from the KPS Updated Safety Analysis Report (USAR).

<u>Criterion 14 - Core Protection Systems</u>

> "Core protection systems, together with associated equipment, shall be designed to act automatically to prevent or to suppress conditions that could result in exceeding acceptable fuel damage limits."

The instrumentation and controls provided to prevent or suppress conditions, which could result in exceeding acceptable fuel damage limits, are described in KPS USAR Section 7. As this change maintains the P-7, P-8, P-10, and the Turbine Impulse Pressure setpoints at approximately 10% reactor power, acceptable analysis results are maintained.

In conclusion, based on the considerations discussed above, (1) there is reasonable assurance that the health and safety of the public will not be endangered by operation in the proposed manner, (2) such activities will be conducted in compliance with the

Commission's regulations, and (3) the issuance of the amendment will not be inimical to the common defense and security or to the health and safety of the public.

6.0 ENVIRONMENTAL CONSIDERATION

A review has determined that the proposed amendment would change a requirement with respect to installation or use of a facility component located within the restricted area, as defined in 10 CFR 20, or would change an inspection or surveillance requirement. However, the proposed amendment does not involve (1) a significant hazards consideration, (2) a significant change in the types or significant increase in the amounts of any effluent that may be released offsite, or (3) a significant increase in individual or cumulative occupational radiation exposure. Accordingly, the proposed amendment meets the eligibility criterion for categorical exclusion set forth in 10 CFR 51.22(c)(9). Therefore, pursuant to 10 CFR 51.22(b), no environmental impact statement or environmental assessment need be prepared in connection with the proposed amendment.

7.0 REFERENCES

1. Licensee Event Report (LER) 50-305/2005-011, "The Setting of a Permissive (P-10) in the Power Range Channels of the Nuclear Instrumentation System was Outside Plant Technical Specification Requirements," dated August 18, 2005 (ADAMS Accession No. ML052380260).

2. NUREG 1431, "Standard Technical Specifications – Westinghouse Plants," Revision 3, Published June 2004.

Figure 1
Kewaunee Power Station
Permissives

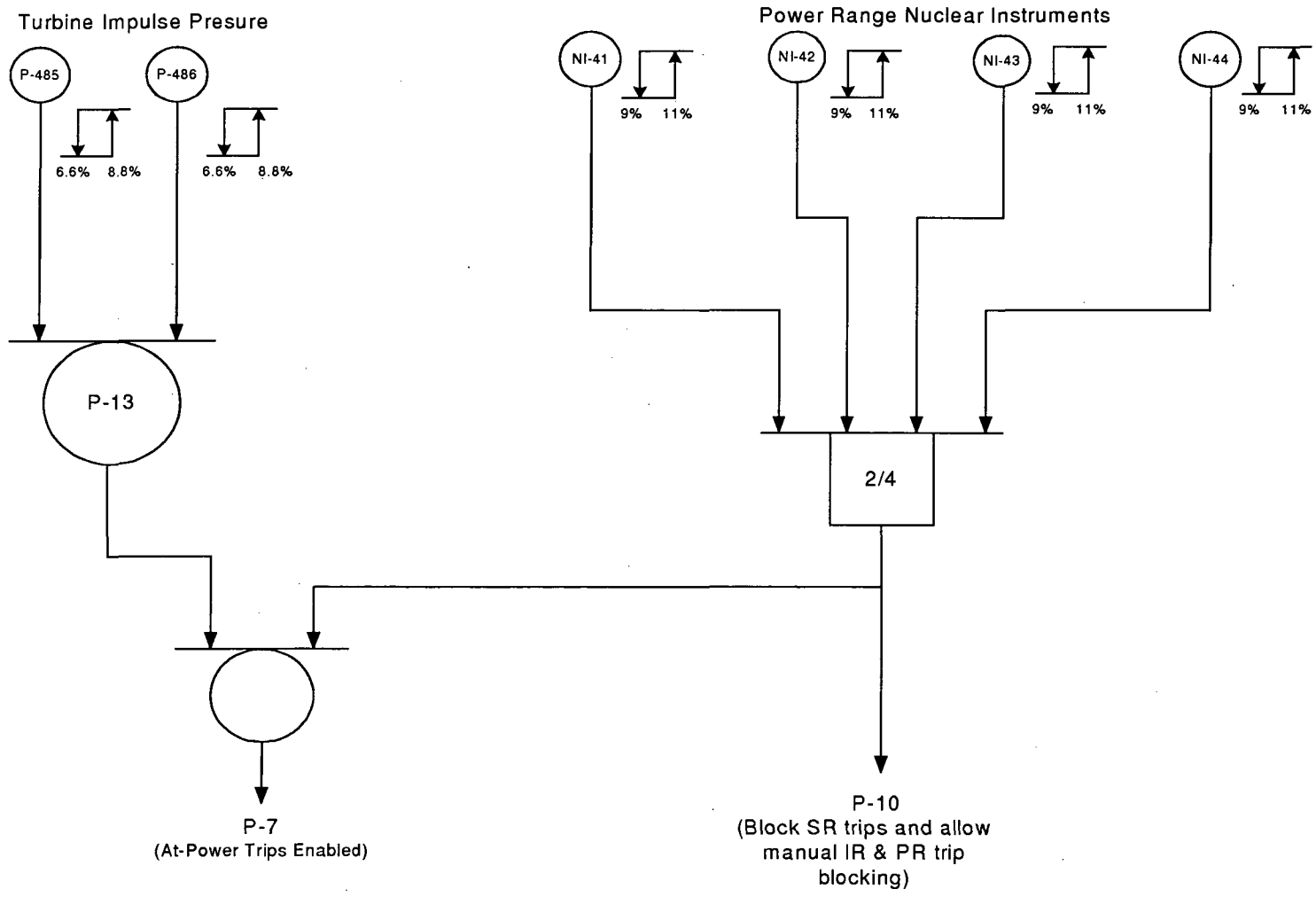

Figure 2
Setpoint Uncertainties

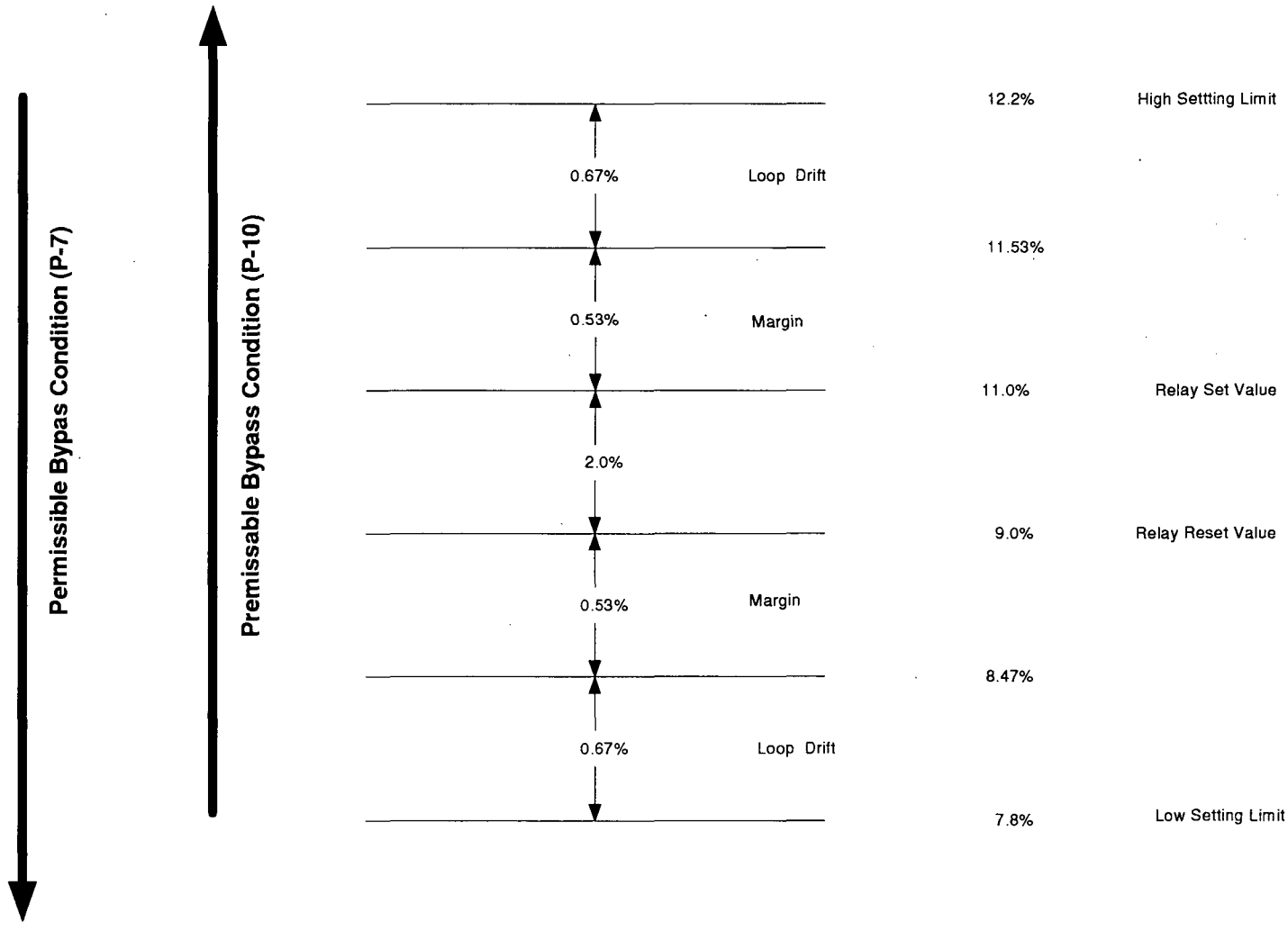

ATTACHMENT 2

LICENSE AMENDMENT REQUEST - 217
REVISION TO REACTOR TRIP PERMISSIVE SETPOINTS

MARKED UP TECHNICAL SPECIFICATION PAGES

KEWAUNEE POWER STATION

MARKED UP TS PAGES:
TS 2.3-4
TABLE TS 3.5-2 Page 4 of 4

DOMINION ENERGY KEWAUNEE, INC.

6. Reactor Trip Interlocks

Protective instrumentation settings for reactor trip interlocks shall be as follows:

A. Prior to exceeding~~Above~~ ~~10~~12.2% of RATED POWER, the low pressurizer pressure trip, high pressurizer level trip, the low reactor coolant flow trips (for both loops), and the turbine trip-reactor trip are made functional.

B. Prior to exceeding~~Above~~ 10% of RATED POWER, the single loop loss-of-flow trip is made functional.

7. Other Trips

A. Undervoltage ≥ 75% of normal voltage

B. Turbine trip

C. Manual trip

D. Safety injection trip (Refer to Table TS 3.5-1 for trip settings)

TABLE TS 3.5-2

INSTRUMENT OPERATION CONDITIONS FOR REACTOR TRIP

NOTES

(1) One additional channel may be taken out of service for zero power physics testing.

(2) Deleted

(3) When a block condition exists, maintain normal operation.

(4) Underfrequency on the 4-kV buses trips the Reactor Coolant Pump breakers, which in turn trips the reactor when power is above P-7.

Permissive/Interlock	Channels	Coincidence	Setting Limit
P-6	Intermediate Range Nuclear Instrument	1 of 2	$\geq 10^{-5}$% RATED POWER
P-7	Power Range Nuclear Instrument	3 of 4 AND 2 of 2	≤ 12.2% RATED POWER
	Turbine Impulse Pressure		≤ 12.2% RATED POWER [(a)]
P-8	Power Range Nuclear Instrument	3 of 4	≤ 10% RATED POWER
P-10	Power Range Nuclear Instrument	2 of 4	≥ 7.8% RATED POWER

[(a)] Setting Limit is converted to an equivalent turbine impulse pressure

ATTACHMENT 3

LICENSE AMENDMENT REQUEST - 217
REVISION TO REACTOR TRIP PERMISSIVE SETPOINTS

PROPOSED TECHNICAL SPECIFICATION PAGES

KEWAUNEE POWER STATION

PROPOSED TS PAGES:
TS 2.3-4
TABLE TS 3.5-2 Page 4 of 4

DOMINION ENERGY KEWAUNEE, INC.

6. Reactor Trip Interlocks

Protective instrumentation settings for reactor trip interlocks shall be as follows:

A. Prior to exceeding 12.2% of RATED POWER, the low pressurizer pressure trip, high pressurizer level trip, the low reactor coolant flow trips (for both loops), and the turbine trip-reactor trip are made functional.

B. Prior to exceeding 10% of RATED POWER, the single loop loss-of-flow trip is made functional.

7. Other Trips

A. Undervoltage ≥ 75% of normal voltage

B. Turbine trip

C. Manual trip

D. Safety injection trip (Refer to Table TS 3.5-1 for trip settings)

TABLE TS 3.5-2

INSTRUMENT OPERATION CONDITIONS FOR REACTOR TRIP

NOTES

(1) One additional channel may be taken out of service for zero power physics testing.

(2) Deleted

(3) When a block condition exists, maintain normal operation.

(4) Underfrequency on the 4-kV buses trips the Reactor Coolant Pump breakers, which in turn trips the reactor when power is above P-7.

Permissive/Interlock	Channels	Coincidence	Setting Limit
P-6	Intermediate Range Nuclear Instrument	1 of 2	> 10^{-5}% RATED POWER
P-7	Power Range Nuclear Instrument	3 of 4 AND 2 of 2	≤ 12.2% RATED POWER
	Turbine Impulse Pressure		≤ 12.2% RATED POWER [(a)]
P-8	Power Range Nuclear Instrument	3 of 4	< 10% RATED POWER
P-10	Power Range Nuclear Instrument	2 of 4	≥ 7.8% RATED POWER

[(a)] Setting Limit is converted to an equivalent turbine impulse pressure

ATTACHMENT 4

LICENSE AMENDMENT REQUEST - 217
REVISION TO REACTOR TRIP PERMISSIVE SETPOINTS

MARKED UP TECHNICAL SPECIFICATION BASES PAGES

KEWAUNEE POWER STATION

MARKED UP TS BASES PAGES:
TS B2.3-2
TS B3.5-4
TS B3.5-5
TS B3.5-6

DOMINION ENERGY KEWAUNEE, INC.

The overpower ΔT reactor trip prevents power density anywhere in the core from exceeding a value at which fuel pellet centerline melting would occur, and includes corrections for change in density and heat capacity of water with temperature, and dynamic compensation for piping delays from the core to the loop temperature detectors. The specified setpoints meet this requirement and include allowance for instrument errors.[2]

The overpower and overtemperature PROTECTION SYSTEM setpoints include the effects of fuel densification and clad flattening on core SAFETY LIMITS.[4]

Reactor Coolant Flow

The low-flow reactor trip protects the core against DNB in the event of either a decreasing actual measured flow in the loops or a sudden loss of power to one or both reactor coolant pumps. The setpoint specified is consistent with the value used in the accident analysis.[5]

The undervoltage and low frequency reactor trips provide additional protection against a decrease in flow. The undervoltage setting provides a direct reactor trip and a reactor coolant pump breaker trip. The undervoltage setting ensures a reactor trip signal will be generated before the low-flow trip setting is reached. The low frequency setting provides only a reactor coolant pump breaker trip.

Steam Generators

The low-low steam generator water level reactor trip ensures that there will be sufficient water inventory in the steam generators at the time of trip to allow for starting the Auxiliary Feedwater System.[6]

Reactor Trip Interlocks

Specified reactor trips are bypassed at low power where they are not required for protection and would otherwise interfere with normal operation. The prescribed setpoints above which these trips are made functional ensures their availability in the power range where needed. Confirmation that bypasses are automatically removed at the prescribed setpoints will be determined by periodic testing. The reactor trips related to loss of one or both reactor coolant pumps are unblocked at approximately 10% of power.

The interlock used to automatically block/unblock the single-loop loss of flow reactor trip (TS 2.3.a.6.B) is designated P-8. The interlock used to automatically block/unblock the other at-power reactor trips (TS 2.3.a.6.A) is designated P-7. The coincidence and setting limits for these interlocks are located in the Notes for TS Table 3.5-2, "Instrument Operation Conditions For Reactor Trip."

Table TS 3.5-1 lists the various parameters and their setpoints which initiate safety injection signals. A safety injection signal (SIS) also initiates a reactor trip signal. The periodic testing will verify that safety injection signals perform their intended function. Refer to the basis of Section 3.5 of these specifications for details of SIS signals.

---

(4) WCAP-8092
(5) USAR Section 14.1.8
(6) USAR Section 14.1.10

Instrument OPERATING Conditions

During plant OPERATIONS, the complete protective instrumentation systems will normally be in service. Reactor safety is provided by the Reactor Protection Systems, which automatically initiates appropriate action to prevent exceeding established limits. Safety is not compromised, however, by continuing OPERATION with certain instrumentation channels out of service since provisions were made for this in the plant design. This specification outlines LIMITING CONDITIONS FOR OPERATION necessary to preserve the effectiveness of the Reactor Control and PROTECTION SYSTEM when any one or more of the channels is out of service.

Almost all reactor protection channels are supplied with sufficient redundancy to provide the capability for CHANNEL CALIBRATION and test at power. Exceptions are backup channels such as reactor coolant pump breakers. The removal of one trip channel on process control equipment is accomplished by placing that channel bistable in a tripped mode; e.g., a two-out-of-three circuit becomes a one-out-of-two circuit. The source and intermediate range nuclear instrumentation system channels are not intentionally placed in a tripped mode since these are one-out-of-two trips, and the trips are therefore bypassed during testing. Testing does not trip the system unless a trip condition exists in another channel.

The OPERABILITY of the instrumentation noted in Table TS 3.5-6 assures that sufficient information is available on these selected plant parameters to aid the operator in identification of an accident and assessment of plant conditions during and following an accident. In the event the instrumentation noted in Table TS 3.5-6 is not OPERABLE, the operator is given instruction on compensatory actions.

Reactor Trip Permissives/Interlocks[5]

Low Power Reactor Trips Block, P-7

The Low Power Reactor Trips Block, P-7 interlock is actuated by input from the Power Range Neutron Flux, P-10, or the Turbine Impulse Pressure, P-13, interlock. The P-7 interlock ensures that the following Functions are performed:

(1) on increasing power, the P-7 interlock automatically enables reactor trips on the following Functions:

- Pressurizer Pressure - Low,
- Pressurizer Water Level - High,
- Reactor Coolant Flow - Low (low flow in two RCS loops),
- RCPs Breaker Open (Two Loops),
- Undervoltage RCPs, and
- Underfrequency RCPs.

These reactor trips are only required when operating above the P-7 setpoint (approximately 10% power). The reactor trips provide protection against violating the departure from nucleate boiling ratio (DNBR) limit. Below the P-7 setpoint, the RCS is capable of providing sufficient natural circulation without any RCP running. Prior to exceeding 12.2% rated power these trips must be enabled as required by TS 2.3.a.6.A.

[5] USAR Section 7.4.2

(2) on decreasing power, the P-7 interlock automatically blocks reactor trips on the following Functions:

- Pressurizer Pressure - Low,
- Pressurizer Water Level - High,
- Reactor Coolant Flow - Low (low flow in two RCS loops),
- RCP Breaker Position (Two Loops),
- Undervoltage RCPs, and
- Underfrequency RCPs.

Trip Setpoint and Allowable Value are not applicable to the P-7 interlock because it is a logic function and thus has no parameter with which to associate a limiting safety system setting (LSSS). The P-7 interlock is a logic function with train and not channel identity. The low power trips are blocked below the P-7 setpoint and unblocked above the P-7 setpoint.

Power Range Neutron Flux, P-8

The Power Range Neutron Flux, P-8 interlock is actuated on increasing power at approximately 10% power as determined by two-out-of-four NIS power range detectors. The P-8 interlock automatically enables the Reactor Coolant Flow - Low and RCP Breaker Position (Single Loop) reactor trips when reactor power increases to above 10% of rated power. Enabling the Reactor Coolant Flow - Low and RCP Breaker Position (Single Loop) reactor trips ensures that protection is provided against a loss of flow in one or both RCS loops that could result in DNB conditions in the core when greater than approximately 10% power. On decreasing power, the reactor trips on low flow if any loop is automatically blocked.

Above 10% rated power, a loss of flow in one or both RCS loops could result in DNB conditions. To prevent a DNB condition from occurring on a loss of flow in one or both RCS loops, the Power Range Neutron Flux, the Reactor Coolant Flow - Low and the RCP Breaker Position (Single Loop) reactor trips must be OPERABLE above 10% of rated power. Below 10% of rated power, these trips do not have to be OPERABLE because the core is not producing sufficient power to be concerned about DNB conditions.

Prior to exceeding 10% rated power, these trips must be enabled as required by TS 2.3.a.6.B.

Power Range Neutron Flux, P-10

The Power Range Neutron Flux, P-10 permissive is actuated at approximately 10% rated power, as determined by two-out-of-four NIS power range detectors. If power level falls below 10% of rated power on 3 of 4 channels, the Power Range High Flux – Low Setpoint and Intermediate Range High Flux nuclear instrument trips will be automatically unblocked. The P-10 permissive ensures that the following Functions are performed:

- On increasing power, the P-10 permissive allows the operator to manually block the Intermediate Range Neutron Flux reactor trip. Note that blocking the reactor trip also blocks the signal to prevent automatic and manual rod withdrawal.
- On increasing power, the P-10 permissive allows the operator to manually block the Power Range High Flux – Low Setpoint reactor trip.
- On increasing power, the P-10 permissive automatically provides a backup signal to block the Source Range Neutron Flux reactor trip.

- On decreasing power (3 of 4 NIs less than approximately 10% rated power) the P-10 permissive provides one of the two inputs to the P-7 interlock.
- On decreasing power, the P-10 permissive automatically enables the Power Range High Flux - Low Setpoint reactor trip and the Intermediate Range High Flux reactor trip and rod stop.

Prior to reactor power decreasing below 7.8% rated power the power range high flux – low setpoint reactor trip and the intermediate range high flux reactor trip must be enabled.

Turbine Impulse Pressure, P-13

The Turbine Impulse Pressure, P-13 interlock is actuated when one-of-two pressure instruments from the first stage of the high-pressure turbine indicates greater than approximately 10% of the rated full power turbine impulse pressure. The P-13 interlock provides one of the two inputs to the P-7 interlock. When two-of-two turbine impulse pressure channels indicate less than approximately 10% turbine power, the P-13 interlock is deactivated. When P-13 is deactivated, P-7 is provided with one of the two inputs necessary to block the at-power trips, the other input being P-10.

ATTACHMENT 5

LICENSE AMENDMENT REQUEST - 217
REVISION TO REACTOR TRIP PERMISSIVE SETPOINTS

PROPOSED TECHNICAL SPECIFICATION BASES PAGES

KEWAUNEE POWER STATION

PROPOSED TS BASES PAGES:
TS B2.3-2
TS B3.5-4
TS B3.5-5
TS B3.5-6

DOMINION ENERGY KEWAUNEE, INC.

The overpower ΔT reactor trip prevents power density anywhere in the core from exceeding a value at which fuel pellet centerline melting would occur, and includes corrections for change in density and heat capacity of water with temperature, and dynamic compensation for piping delays from the core to the loop temperature detectors. The specified setpoints meet this requirement and include allowance for instrument errors.[2]

The overpower and overtemperature PROTECTION SYSTEM setpoints include the effects of fuel densification and clad flattening on core SAFETY LIMITS.[4]

Reactor Coolant Flow

The low-flow reactor trip protects the core against DNB in the event of either a decreasing actual measured flow in the loops or a sudden loss of power to one or both reactor coolant pumps. The setpoint specified is consistent with the value used in the accident analysis.[5]

The undervoltage and low frequency reactor trips provide additional protection against a decrease in flow. The undervoltage setting provides a direct reactor trip and a reactor coolant pump breaker trip. The undervoltage setting ensures a reactor trip signal will be generated before the low-flow trip setting is reached. The low frequency setting provides only a reactor coolant pump breaker trip.

Steam Generators

The low-low steam generator water level reactor trip ensures that there will be sufficient water inventory in the steam generators at the time of trip to allow for starting the Auxiliary Feedwater System. [6]

Reactor Trip Interlocks

Specified reactor trips are bypassed at low power where they are not required for protection and would otherwise interfere with normal operation. The prescribed setpoints above which these trips are made functional ensures their availability in the power range where needed. Confirmation that bypasses are automatically removed at the prescribed setpoints will be determined by periodic testing. The reactor trips related to loss of one or both reactor coolant pumps are unblocked at approximately 10% of power.

The interlock used to automatically block/unblock the single-loop loss of flow reactor trip (TS 2.3.a.6.B) is designated P-8. The interlock used to automatically block/unblock the other at-power reactor trips (TS 2.3.a.6.A) is designated P-7. The coincidence and setting limits for these interlocks are located in the Notes for TS Table 3.5-2, "Instrument Operation Conditions For Reactor Trip."

Table TS 3.5-1 lists the various parameters and their setpoints which initiate safety injection signals. A safety injection signal (SIS) also initiates a reactor trip signal. The periodic testing will verify that safety injection signals perform their intended function. Refer to the basis of Section 3.5 of these specifications for details of SIS signals.

---

[4] WCAP-8092
[5] USAR Section 14.1.8
[6] USAR Section 14.1.10

Instrument OPERATING Conditions

During plant OPERATIONS, the complete protective instrumentation systems will normally be in service. Reactor safety is provided by the Reactor Protection Systems, which automatically initiates appropriate action to prevent exceeding established limits. Safety is not compromised, however, by continuing OPERATION with certain instrumentation channels out of service since provisions were made for this in the plant design. This specification outlines LIMITING CONDITIONS FOR OPERATION necessary to preserve the effectiveness of the Reactor Control and PROTECTION SYSTEM when any one or more of the channels is out of service.

Almost all reactor protection channels are supplied with sufficient redundancy to provide the capability for CHANNEL CALIBRATION and test at power. Exceptions are backup channels such as reactor coolant pump breakers. The removal of one trip channel on process control equipment is accomplished by placing that channel bistable in a tripped mode; e.g., a two-out-of-three circuit becomes a one-out-of-two circuit. The source and intermediate range nuclear instrumentation system channels are not intentionally placed in a tripped mode since these are one-out-of-two trips, and the trips are therefore bypassed during testing. Testing does not trip the system unless a trip condition exists in another channel.

The OPERABILITY of the instrumentation noted in Table TS 3.5-6 assures that sufficient information is available on these selected plant parameters to aid the operator in identification of an accident and assessment of plant conditions during and following an accident. In the event the instrumentation noted in Table TS 3.5-6 is not OPERABLE, the operator is given instruction on compensatory actions.

Reactor Trip Permissives/Interlocks[5]

Low Power Reactor Trips Block, P-7

The Low Power Reactor Trips Block, P-7 interlock is actuated by input from the Power Range Neutron Flux, P-10, or the Turbine Impulse Pressure, P-13, interlock. The P-7 interlock ensures that the following Functions are performed:

(1) on increasing power, the P-7 interlock automatically enables reactor trips on the following Functions:

- Pressurizer Pressure - Low,
- Pressurizer Water Level - High,
- Reactor Coolant Flow - Low (low flow in two RCS loops),
- RCPs Breaker Open (Two Loops),
- Undervoltage RCPs, and
- Underfrequency RCPs.

These reactor trips are only required when operating above the P-7 setpoint (approximately 10% power). The reactor trips provide protection against violating the departure from nucleate boiling ratio (DNBR) limit. Below the P-7 setpoint, the RCS is capable of providing sufficient natural circulation without any RCP running. Prior to exceeding 12.2% rated power these trips must be enabled as required by TS 2.3.a.6.A.

[5] USAR Section 7.4.2

(2) on decreasing power, the P-7 interlock automatically blocks reactor trips on the following Functions:

- Pressurizer Pressure - Low,
- Pressurizer Water Level - High,
- Reactor Coolant Flow - Low (low flow in two RCS loops),
- RCP Breaker Position (Two Loops),
- Undervoltage RCPs, and
- Underfrequency RCPs.

Trip Setpoint and Allowable Value are not applicable to the P-7 interlock because it is a logic function and thus has no parameter with which to associate a limiting safety system setting (LSSS). The P-7 interlock is a logic function with train and not channel identity. The low power trips are blocked below the P-7 setpoint and unblocked above the P-7 setpoint.

Power Range Neutron Flux, P-8

The Power Range Neutron Flux, P-8 interlock is actuated on increasing power at approximately 10% power as determined by two-out-of-four NIS power range detectors. The P-8 interlock automatically enables the Reactor Coolant Flow - Low and RCP Breaker Position (Single Loop) reactor trips when reactor power increases to above 10% of rated power. Enabling the Reactor Coolant Flow - Low and RCP Breaker Position (Single Loop) reactor trips ensures that protection is provided against a loss of flow in one or both RCS loops that could result in DNB conditions in the core when greater than approximately 10% power. On decreasing power, the reactor trips on low flow if any loop is automatically blocked.

Above 10% rated power, a loss of flow in one or both RCS loops could result in DNB conditions. To prevent a DNB condition from occurring on a loss of flow in one or both RCS loops, the Power Range Neutron Flux, the Reactor Coolant Flow – Low, and the RCP Breaker Position (Single Loop) reactor trips must be OPERABLE above 10% of rated power. Below 10% of rated power, these trips do not have to be OPERABLE because the core is not producing sufficient power to be concerned about DNB conditions.

Prior to exceeding 10% rated power, these trips must be enabled as required by TS 2.3.a.6.B.

Power Range Neutron Flux, P-10

The Power Range Neutron Flux, P-10 permissive is actuated at approximately 10% rated power, as determined by two-out-of-four NIS power range detectors. If power level falls below 10% of rated power on 3 of 4 channels, the Power Range High Flux – Low Setpoint and Intermediate Range High Flux nuclear instrument trips will be automatically unblocked. The P-10 permissive ensures that the following Functions are performed:

- On increasing power, the P-10 permissive allows the operator to manually block the Intermediate Range Neutron Flux reactor trip. Note that blocking the reactor trip also blocks the signal to prevent automatic and manual rod withdrawal.
- On increasing power, the P-10 permissive allows the operator to manually block the Power Range High Flux – Low Setpoint reactor trip.

- On increasing power, the P-10 permissive automatically provides a backup signal to block the Source Range Neutron Flux reactor trip.
- On decreasing power (3 of 4 NIs less than approximately 10% rated power) the P-10 permissive provides one of the two inputs to the P-7 interlock.
- On decreasing power, the P-10 permissive automatically enables the Power Range High Flux - Low Setpoint reactor trip and the Intermediate Range High Flux reactor trip and rod stop.

Prior to reactor power decreasing below 7.8% rated power the power range high flux – low setpoint reactor trip and the intermediate range high flux reactor trip must be enabled.

Turbine Impulse Pressure, P-13

The Turbine Impulse Pressure, P-13 interlock is actuated when one-of-two pressure instruments from the first stage of the high-pressure turbine indicates greater than approximately 10% of the rated full power turbine impulse pressure. The P-13 interlock provides one of the two inputs to the P-7 interlock. When two-of-two turbine impulse pressure channels indicate less than approximately 10% turbine power, the P-13 interlock is deactivated. When P-13 is deactivated, P-7 is provided with one of the two inputs necessary to block the at-power trips, the other input being P-10.