3-60B Cask

Presentation of

Hypothetical Drop Accident Evaluation Approach

at

United States Nuclear Regulatory Commission

Washington, D.C.

by

Energy*Solutions*

Columbia, S.C.

Overall Approach

- Free drop analyses will be performed in two steps. Overall system response will be obtained by using a proprietary program CASKDROP, which calculates energy absorbed, maximum deformation and maximum deceleration during a drop event.
- The detailed stress analyses will be performed using ANSYS FEM.

CASKDROP Validation Approach

- Develop an analytical approach, using LS-DYNA that is validated with the test data obtained from the full-scale test of a similar size cask as 3-60B.
- Perform 3-60B cask analyses using LS-DYNA and CASKDROP.
- Show that CASKDROP results are conservative compared to LS-DYAN results.
- Use CASKDROP results in the SAR analyses.

VHLW Cask Drop Tests

- Full-scale prototype tests were performed in Germany in 1990 with the participation of Sandia National Lab (SNL) and German nuclear regulatory authority BAM
- Tests were performed in side drop, slap-down and end drop orientations
- Maximum acceleration and strain data are available from SNL and BAM instruments

VHLW Cask Drop Test – Instrumentation Scheme

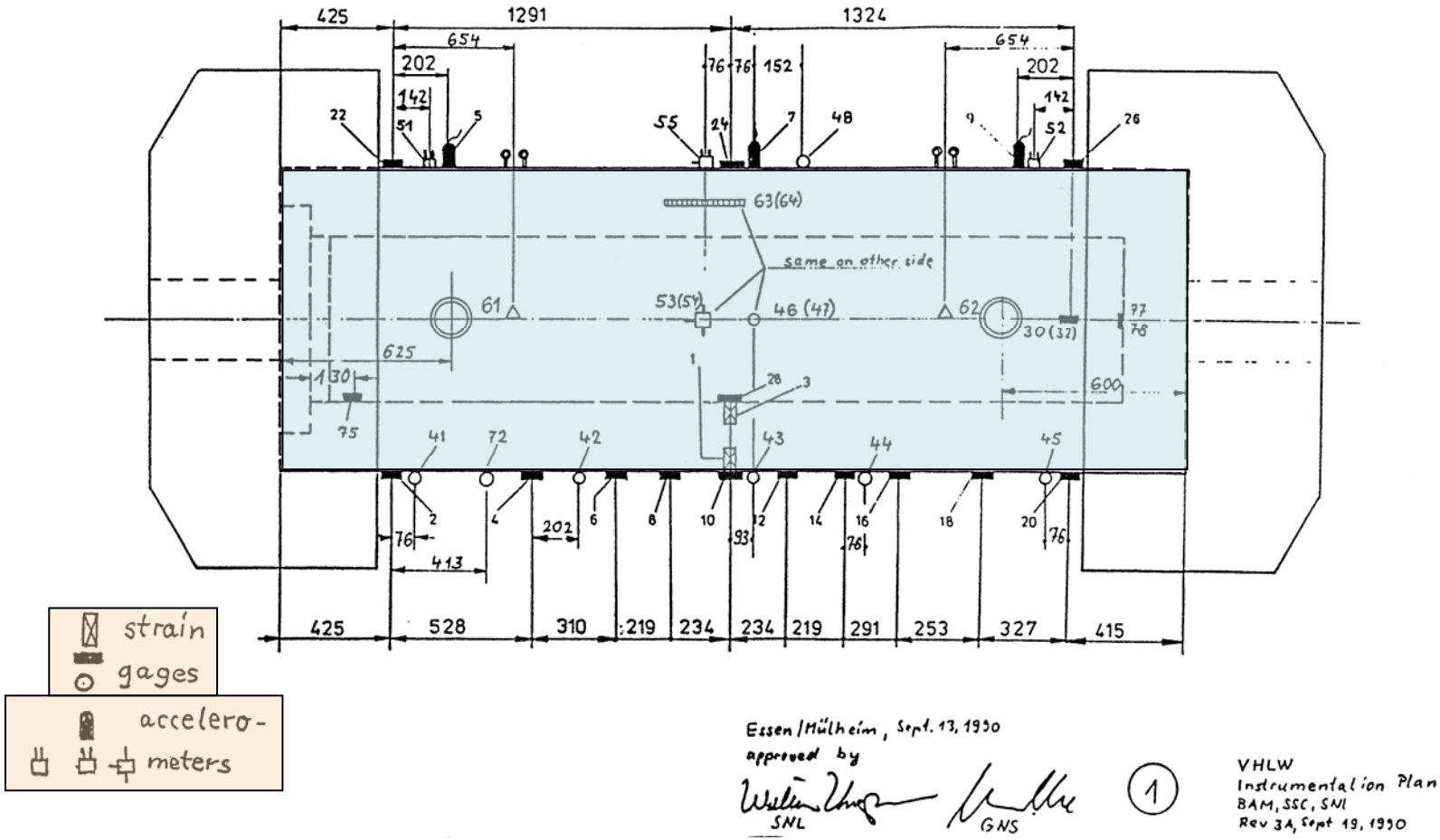

A Few Test Photographs

VHLW and 3-60B Cask Comparison

Item	VHLW	3-60
Cask Length, in	136	128.625
Cask Diameter, in	46	51
Cask Weight, lb	52,400	80,000
I/L Foam Density, lb/cft	17	25

3-60B Cask & VHLW Cask Comparison

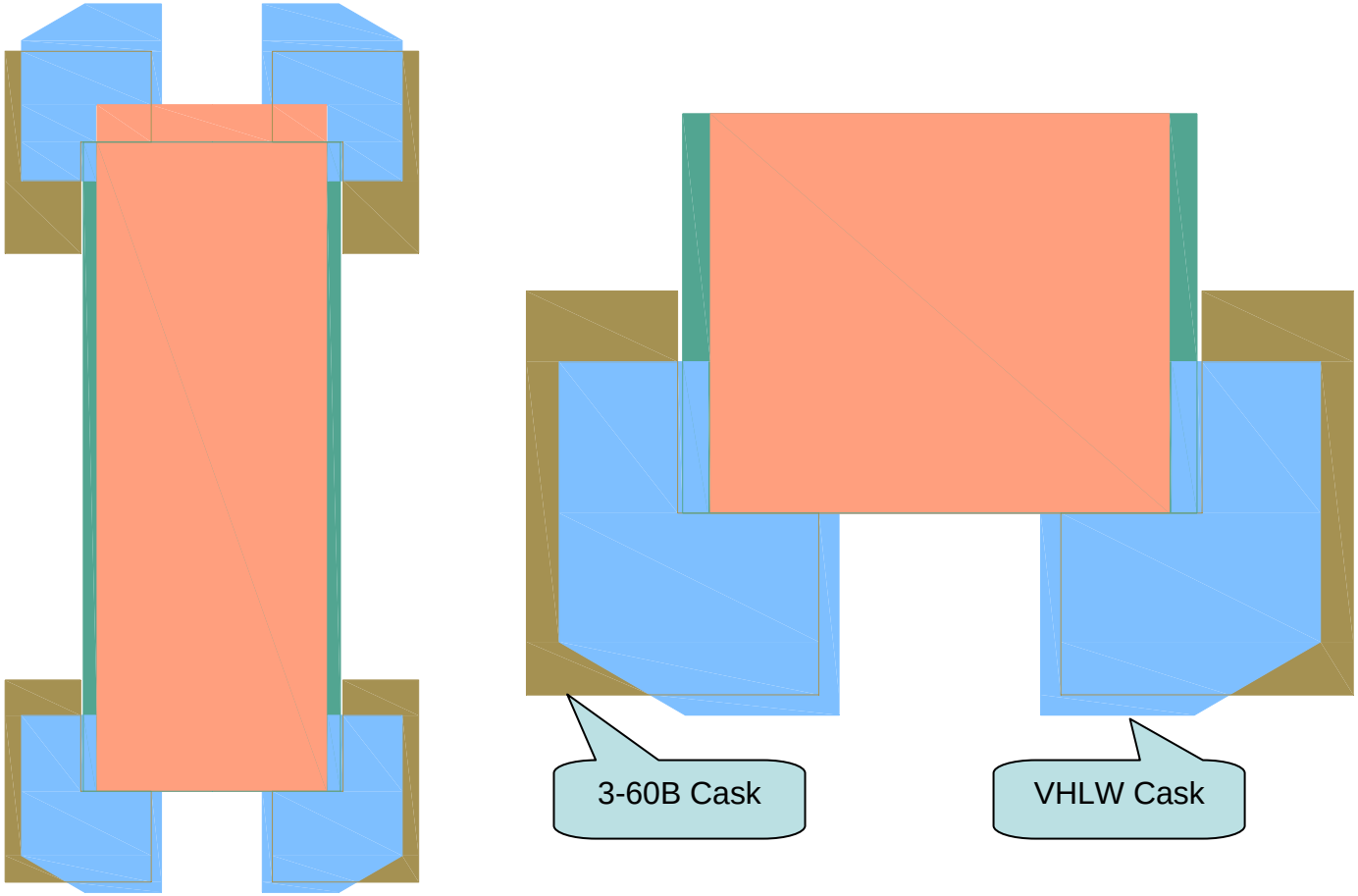

LS-DYNA Modeling Approach

- Represent both foam and the can skin in the FEM
- Use bi-linear kinematic hardening for the steel skin
- Choose a foam material model
- Use appropriate static and dynamic coefficient of friction
- Use small enough time step to resolve response up to 500 Hz.

Nonlinear Foam Models Available in LS-DYNA

- Crushable Foam (Mat 063)

  Conventional Deviatoric

- Soil and Foam (Mat 005)

  Combined Volumetric with Pressure Dependent Deviatoric

- Closed Cell Foam (Mat 053)

  Phenomenological Constitutive Model

- Low Density Foam (Mat 057)

- Various Specialized Foam Models
  - Fu-Chang Foam Model (Mat 083)
  - Anisotropic Crushable Foam (Mat 142)
  - Pitzer Crushable Foam (Mat 144)
  - Hill Foam (Mat 177)

Choosing Material Model for LS-DYNA Analysis

1. Objective of the Analysis, and
2. Foam Mechanical Properties that are available

Objective of the LS-DYNA Analyses

Since the impact limiter and cask structure can be dynamically uncoupled, they can be analyzed separately. Therefore, the objective of the impact limiter analysis is to determine the following:

1. The maximum acceleration value. Time-history response is of no importance. Also, since the impact limiter crushes monotonically during the initial part of the impact, during which the maximum acceleration occurs, the unloading response of the material is also of secondary importance.
2. The maximum impact limiter deformation. This aspect of the analysis also becomes less important because the foam material will be assumed to have totally failed during the hypothetical drop tests.

Available Foam Mechanical Properties

- Stress-Strain (at various temperatures) – ASTM D-1621
- Tensile Strength – ASTM D-1623
- Tensile Modulus – ASTM D-1623
- Shear Modulus – ASTM C-273
- Flexural Modulus – ASTM D-790

Material Model Choice Corroboration

- Confirm that the chosen foam material model can accurately reproduce the stress-strain data obtained from the ASTM D-1621 test procedure.
- Perform an LS-DYNA analysis on the D-1621 test coupon, applying displacement at one end of the coupon at a small strain rate and calculating engineering stress in the material.

1
ELEMENTS

ANSYS
JUN 4 2007
15:17:52
PLOT NO. 1

¼-Symmetry Finite Element Model of the ASTM D-1621 Test Coupon

Coupon Size: 2”x2”x2”

Applied Strain Rate: 1 in/in/sec

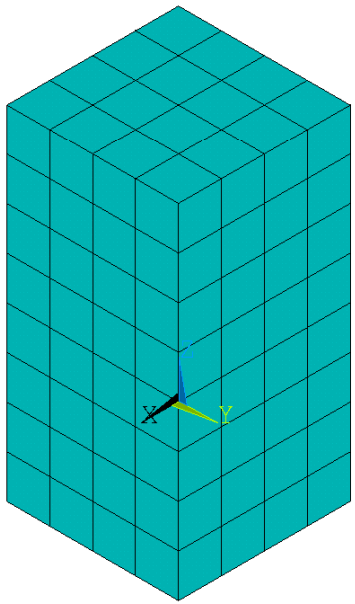

LS-DYNA USER INPUT

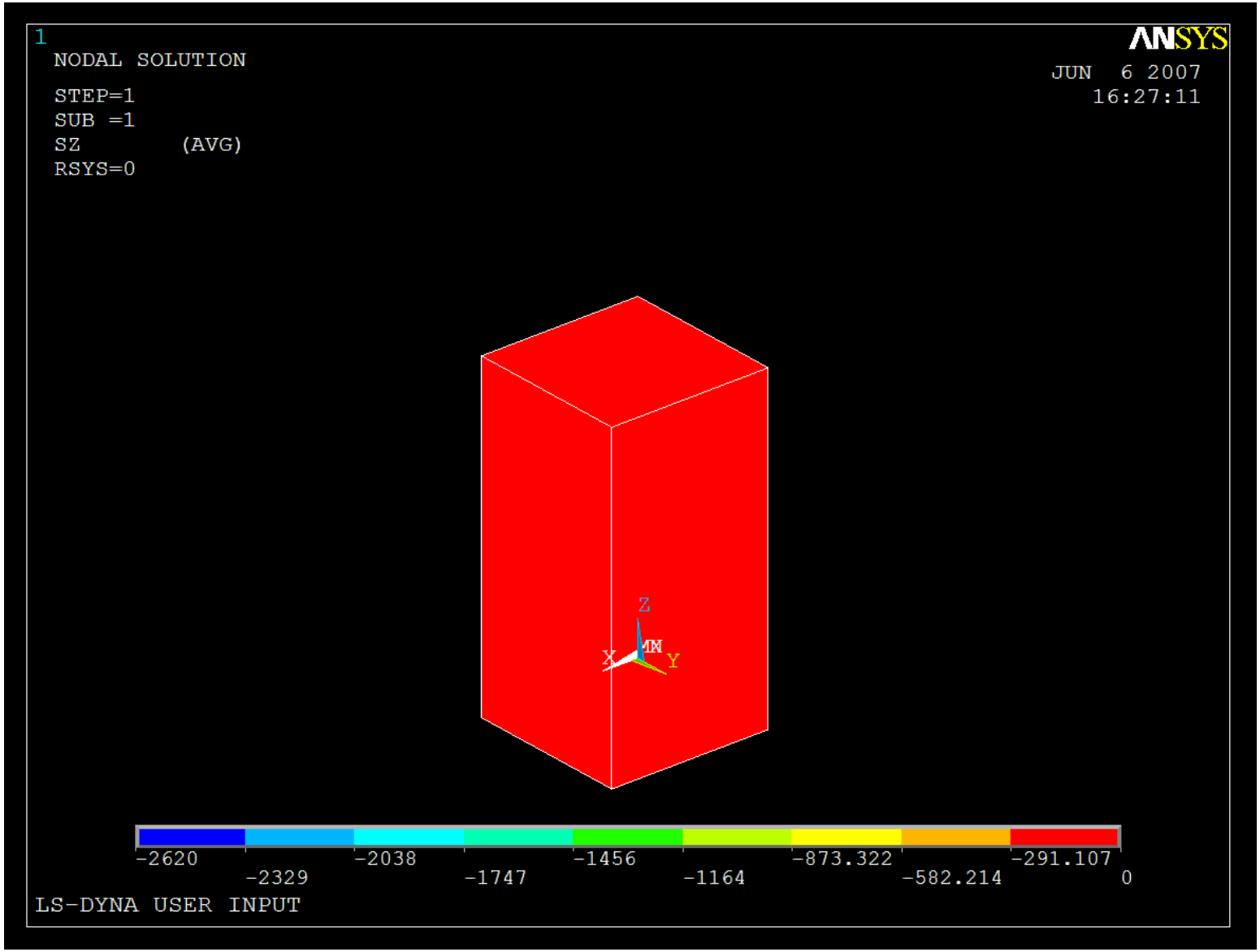
1
NODAL SOLUTION
STEP=1
SUB =1
SZ (AVG)
RSYS=0
ANSYS
JUN 6 2007
16:27:11
Z
X
MN
Y
-2620
-2329
-2038
-1747
-1456
-1164
-873.322
-582.214
-291.107
0
LS-DYNA USER INPUT

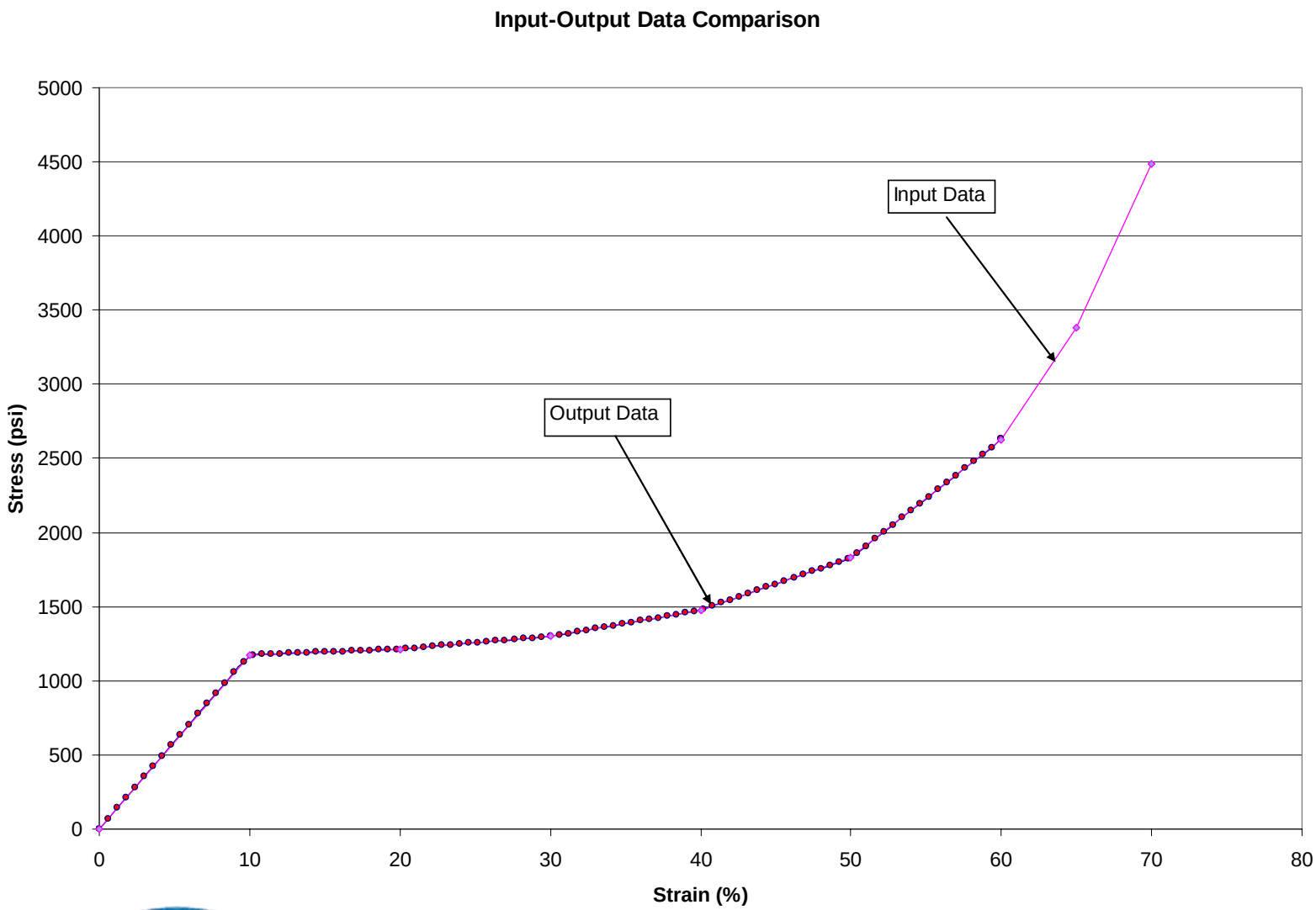
Input-Output Data Comparison
Stress (psi)
5000
4500
4000
3500
3000
2500
2000
1500
1000
500
0
0
10
20
30
40
50
60
70
80
Strain (%)
Input Data
Output Data

VHLW Cask – LS-DYNA Analyses

- Construct a finite element model of the VHLW cask package. The model must represent the cask, the foam in the impact limiter, and the can surrounding it. It must have a total mass of 52,400 lbs or more.
- Represent the steel with the kinematic hardening model.
- Represent the foam with the appropriate material model.
- Perform 30-ft drop analyses in the end, side and slap-down orientations for sufficiently long duration past the impact time.
- Compare the results with the available test data.

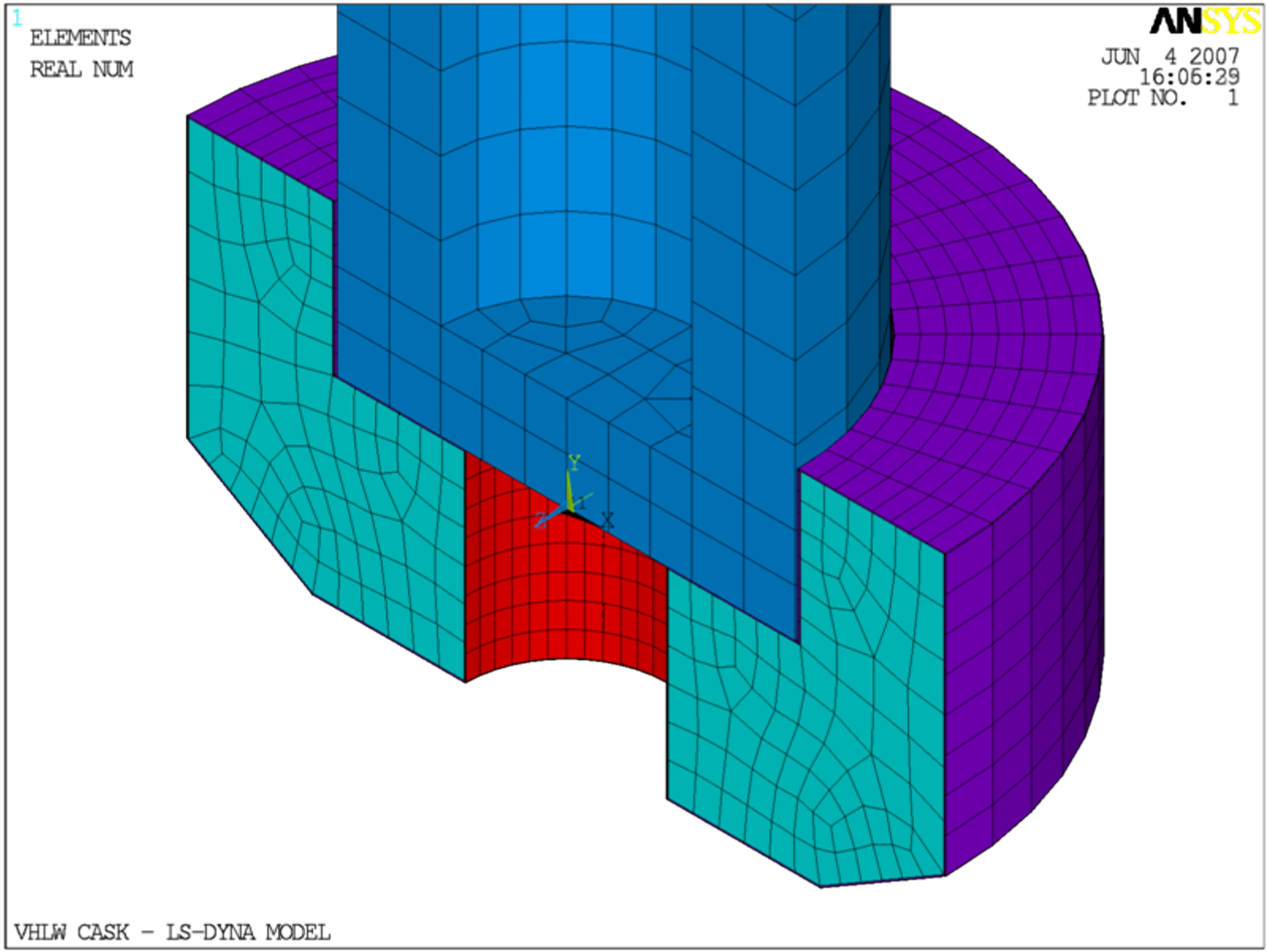
1
ELEMENTS
REAL NUM
ANSYS
JUN 4 2007
16:06:29
PLOT NO. 1
Y
Z
X
VHLW CASK - LS-DYNA MODEL

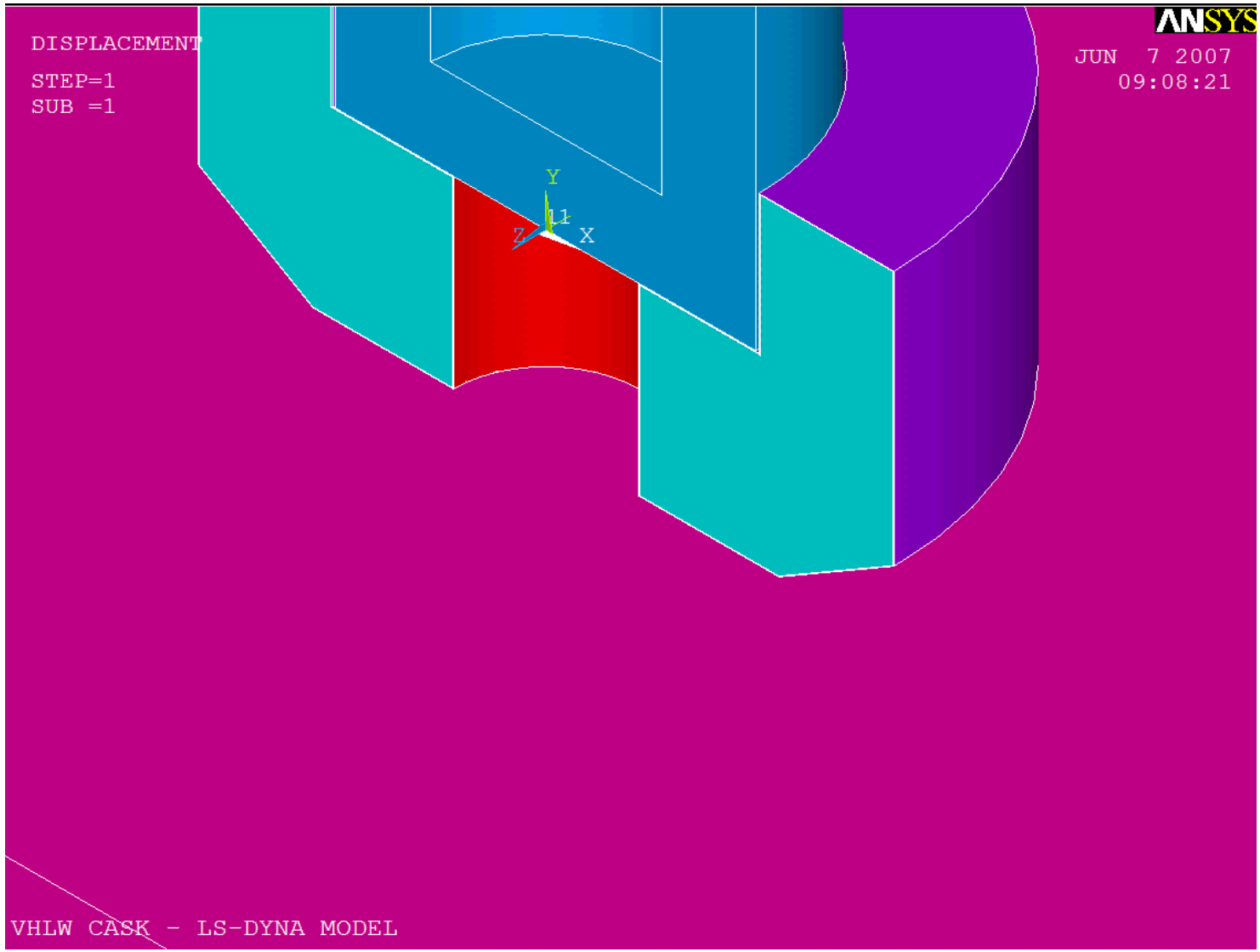
DISPLACEMENT
STEP=1
SUB =1
ANSYS
JUN 7 2007
09:08:21
Y
Z
X
VHLW CASK - LS-DYNA MODEL

VHLW Cask - Side Drop

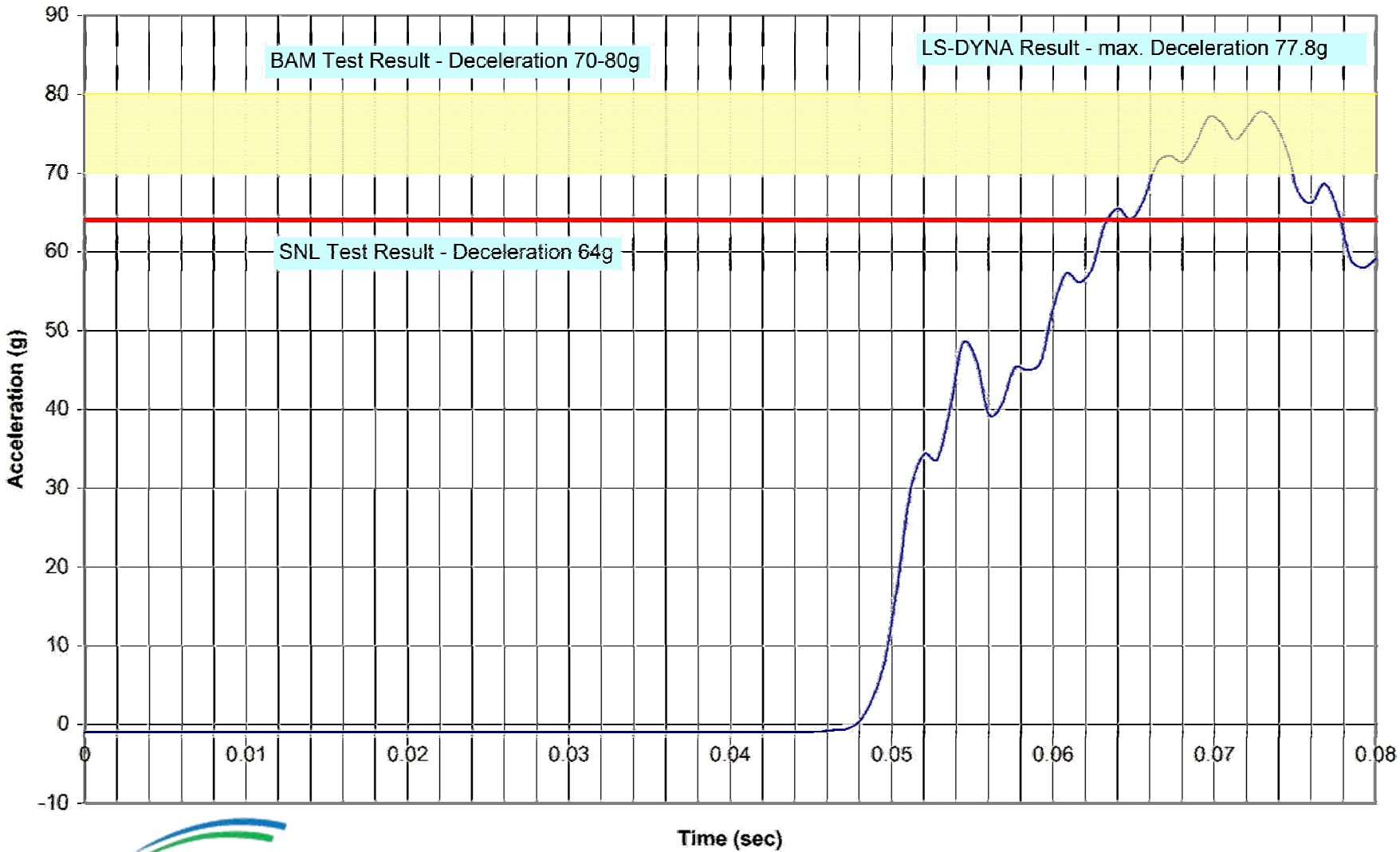

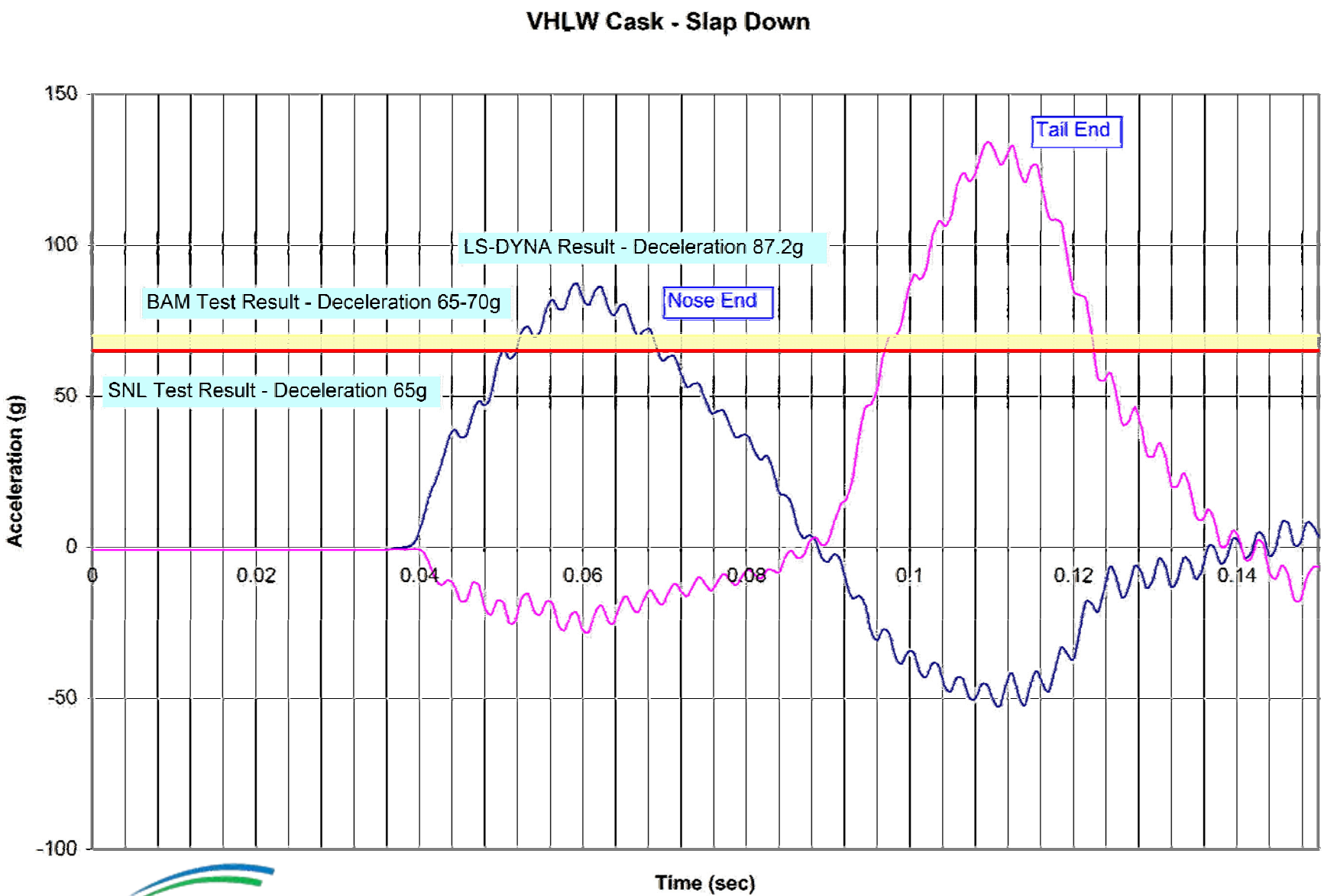
VHLW Cask - Slap Down
150
100
50
0
-50
-100
Acceleration (g)
0
0.02
0.04
0.06
0.08
0.1
0.12
0.14
Time (sec)
Tail End
LS-DYNA Result - Deceleration 87.2g
Nose End
BAM Test Result - Deceleration 65-70g
SNL Test Result - Deceleration 65g

LS-DYNA Analyses Conclusions

- LS-DYNA can conservatively predict the 30-ft drop test results, using the modeling techniques developed by EnergySolutions.

3-60B Cask – LS-DYNA Analyses

- Construct a finite element model of the 3-60B cask package. Using the same modeling approach as used for the VHLW cask analyses.
- Perform 30-ft drop analyses in the end, side and corner over C.G. orientations for sufficiently long duration past the impact time.
- Compare the results with the data obtained from the LS-DYNA analyses.

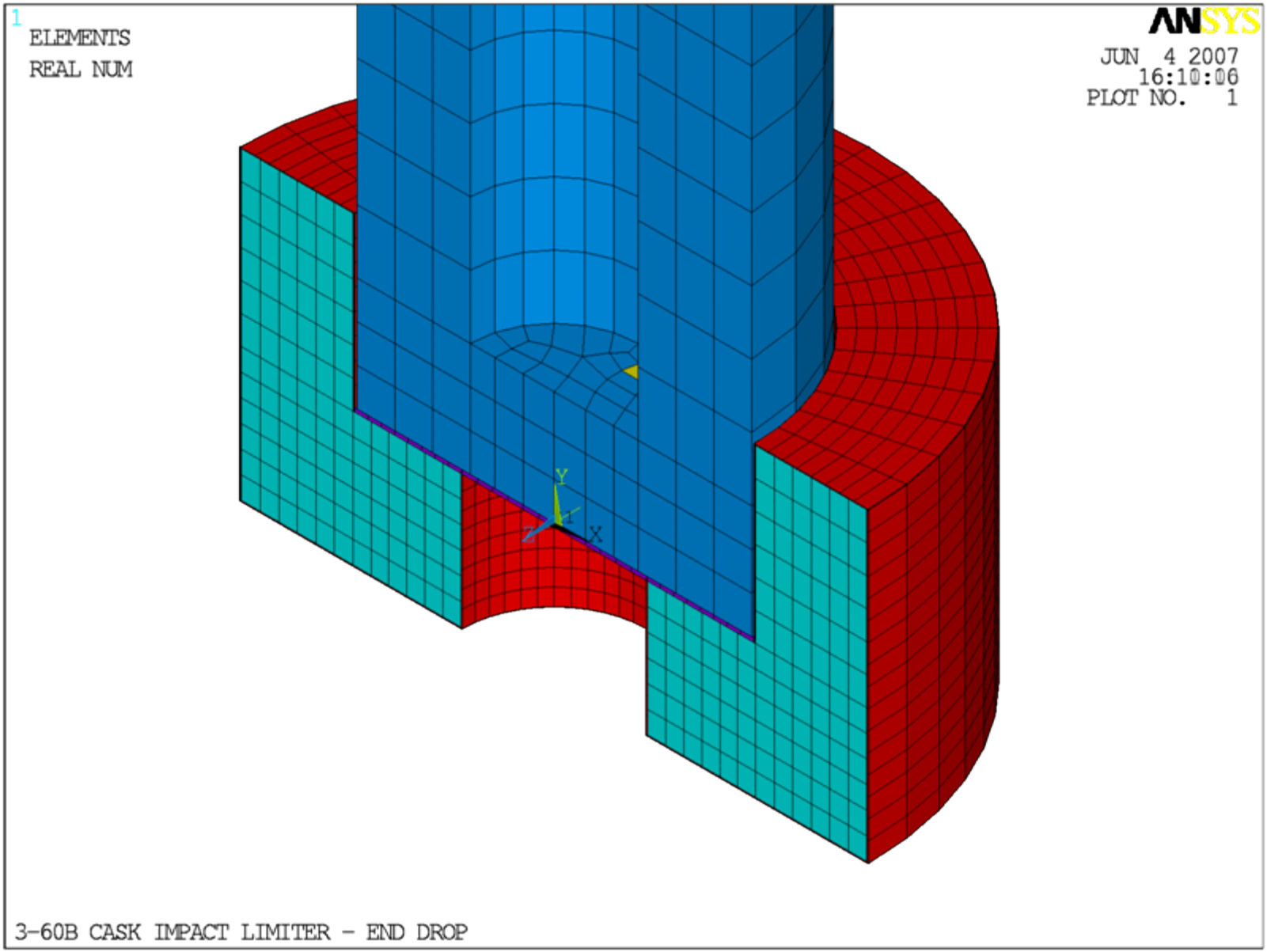
1
ELEMENTS
REAL NUM
ANSYS
JUN 4 2007
16:10:06
PLOT NO. 1
Y
Z
X
3-60B CASK IMPACT LIMITER - END DROP

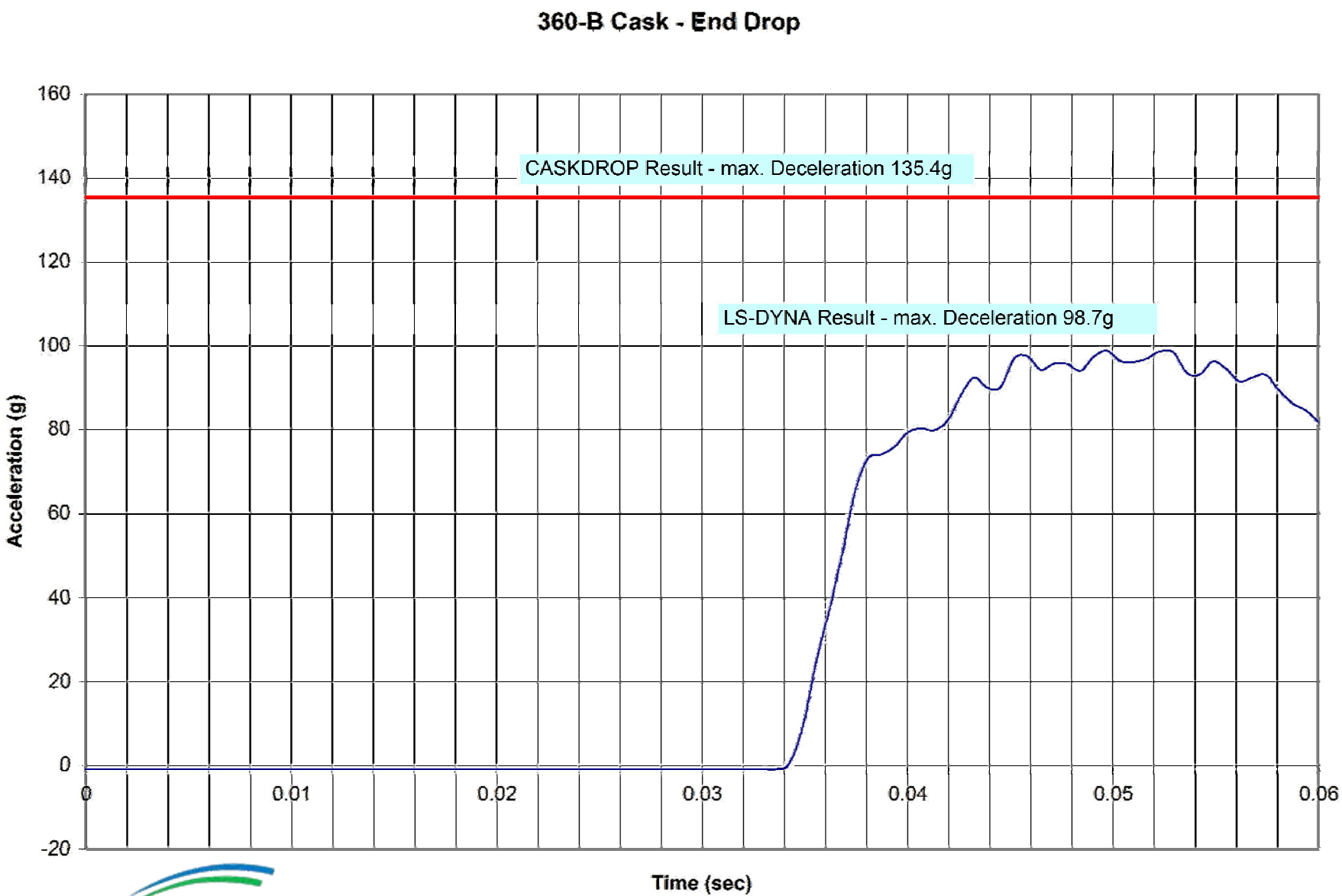
360-B Cask - End Drop
CASKDROP Result - max. Deceleration 135.4g
LS-DYNA Result - max. Deceleration 98.7g
Acceleration (g)
160
140
120
100
80
60
40
20
0
-20
0
0.01
0.02
0.03
0.04
0.05
0.06
Time (sec)

Side Drop

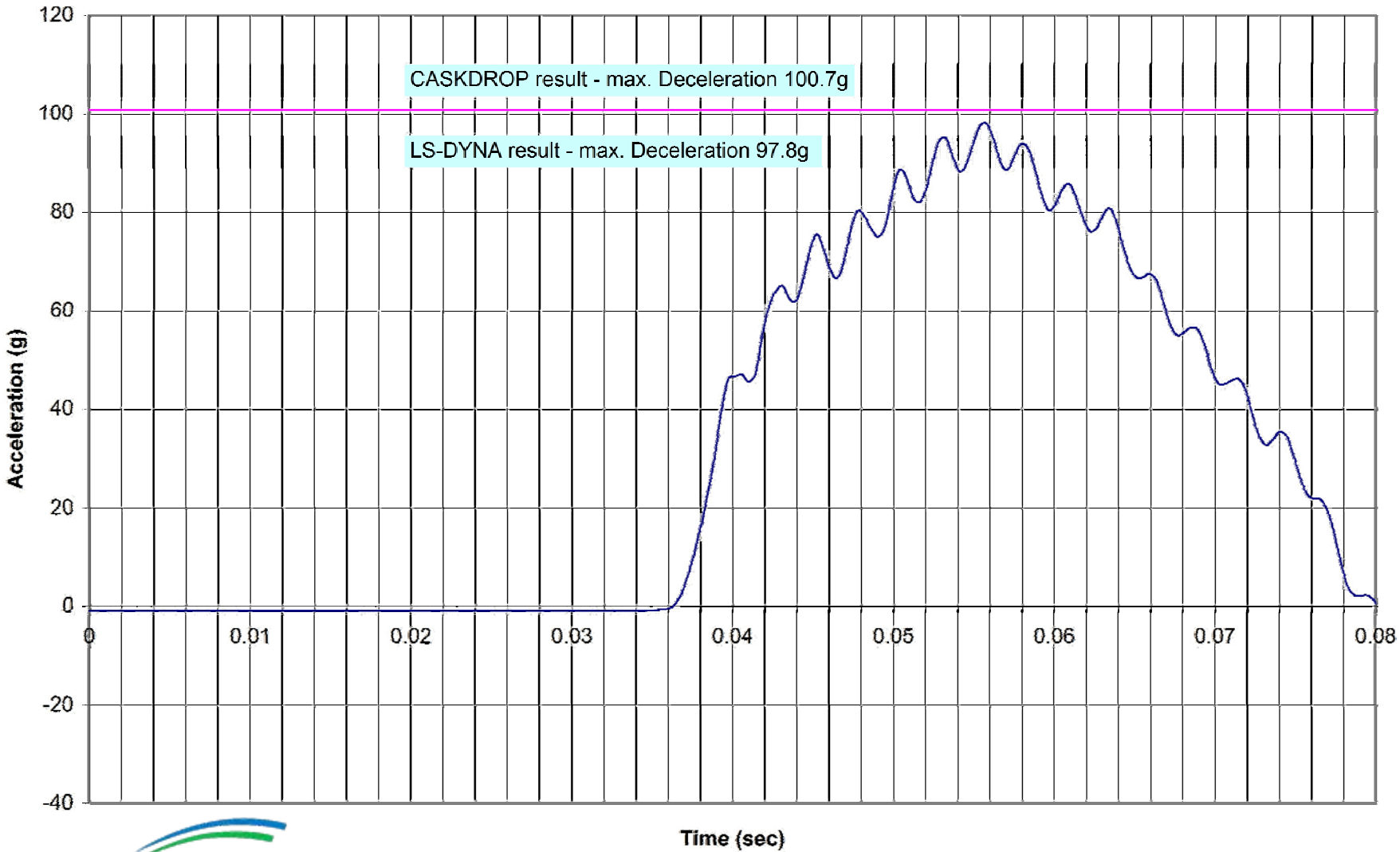
CASKDROP result - max. Deceleration 100.7g
LS-DYNA result - max. Deceleration 97.8g
Acceleration (g)
120
100
80
60
40
20
0
-20
-40
0
0.01
0.02
0.03
0.04
0.05
0.06
0.07
0.08
Time (sec)

3-60B Cask - Corner Drop

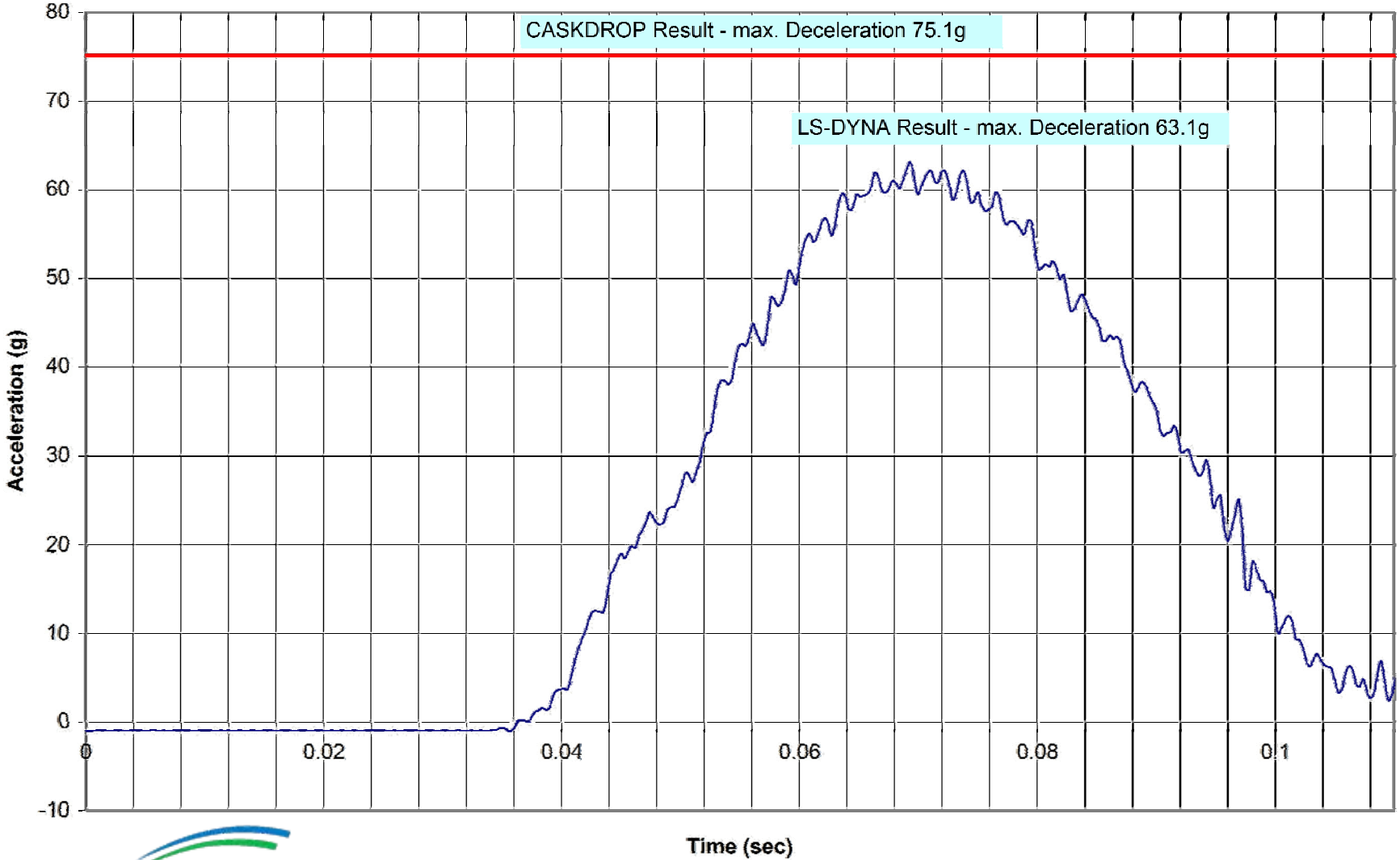

Why does CASKDROP give Conservative Results?

- CASKDROP formulations are based on the energy balance principle under various extreme conditions.
- The impact limiter geometry is divided into regions known as the "backed" and the "unbacked" regions.
- In one extreme condition, the energy is assumed to be absorbed by the foam in the backed region only. This gives a conservative estimate of strain and stress.
- When calculating the acceleration, the entire foam body is assumed to be effective, resulting in a larger force and "g" value estimate.
- The largest of the extreme values is used in the calculations.

CASKDROP Result Examples

Drop Orientation		Deceleration (g)	Deflection (in)
End	Cold Foam (Method 1)	68.5	7.9
	Cold Foam (Method 2)	**135.4**	4.4
	Hot Foam (Method 1)	72.6	**10.2**
	Hot Foam (Method 2)	92.3	5.8

Comparison with LS-DYNA

Summary

- LS-DYNA conservatively predicts the 30-ft drop test results, using the ES modeling techniques.
- CASKDROP program predicts the drop test results more conservatively than LS-DYNA.
- Therefore, CASKDROP conservatively predicts drop test results.

Conclusions

- CASKDROP can be used for the SAR analyses of 3-60B cask with sufficient conservatism.

The End

Click ESC Now

Crushable Foam (Mat 063)

Based on conventional deviatoric formulation

Requires Volumetric Strain vs. Yield Stress data

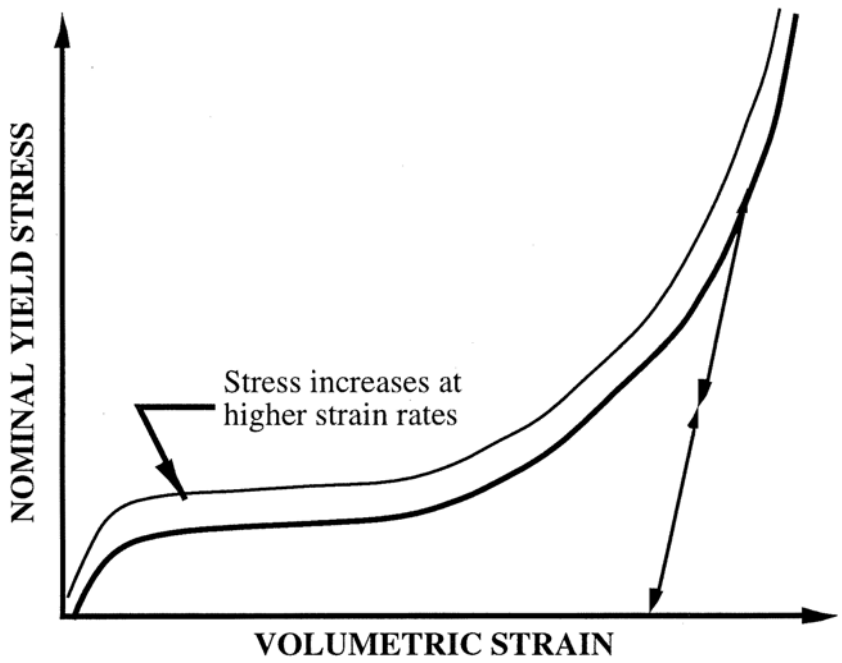

Soil and Foam (Mat 005)

Based on combined volumetric with pressure-dependent deviatoric formulation

$$\phi_v = p - f(\gamma)$$

$$\phi_s = J_2 - (a_0 + a_1 p + a_2 p^2)$$

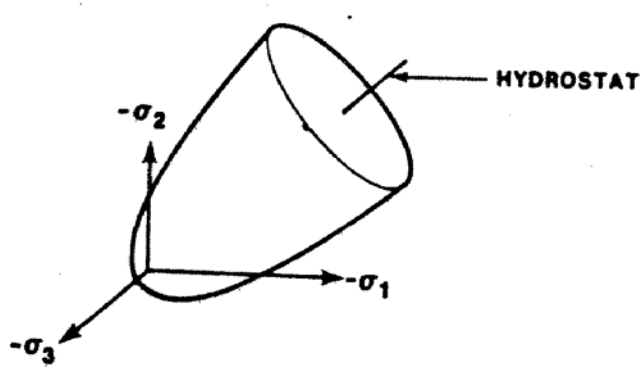

Closed Cell Foam (Mat 053)

Based on phenomenological constitutive model formulation

$$\sigma_{ij} = \sigma_{ij}^{sk} + \sigma^{air}\delta_{ij}$$

$$g = A\langle II' \rangle + B(1 + C\gamma)$$

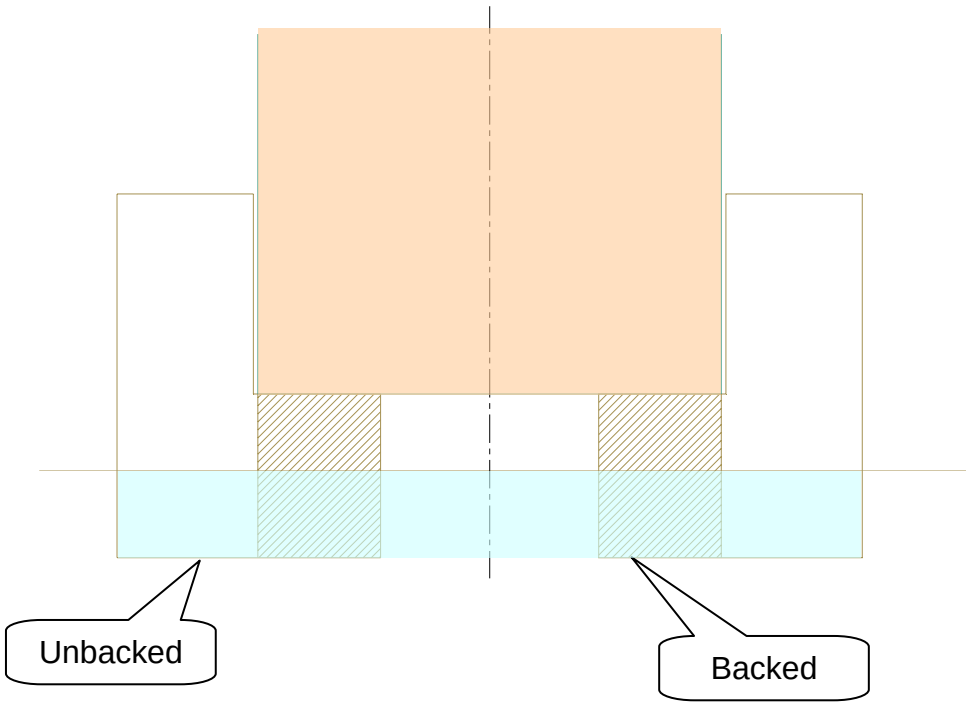
Unbacked
Backed

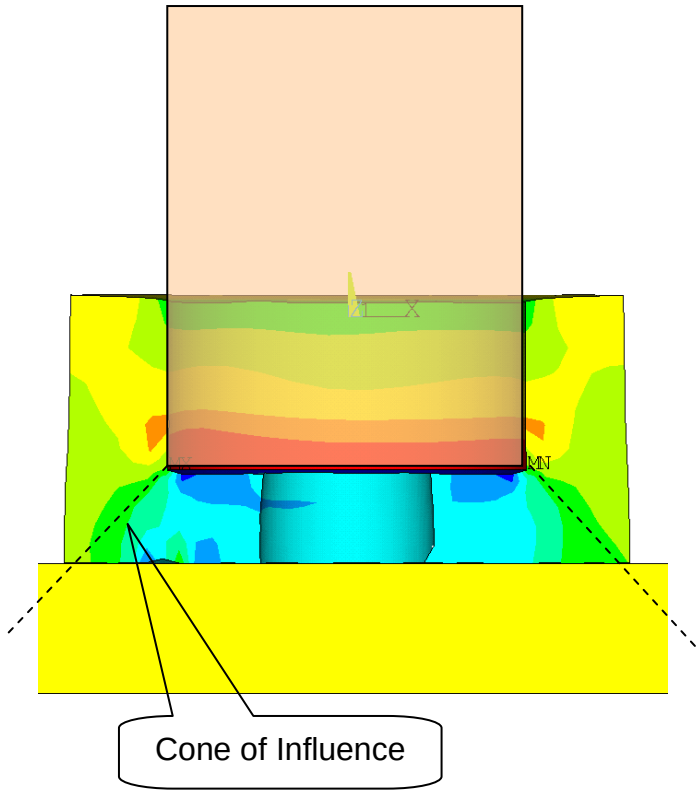
Cone of Influence

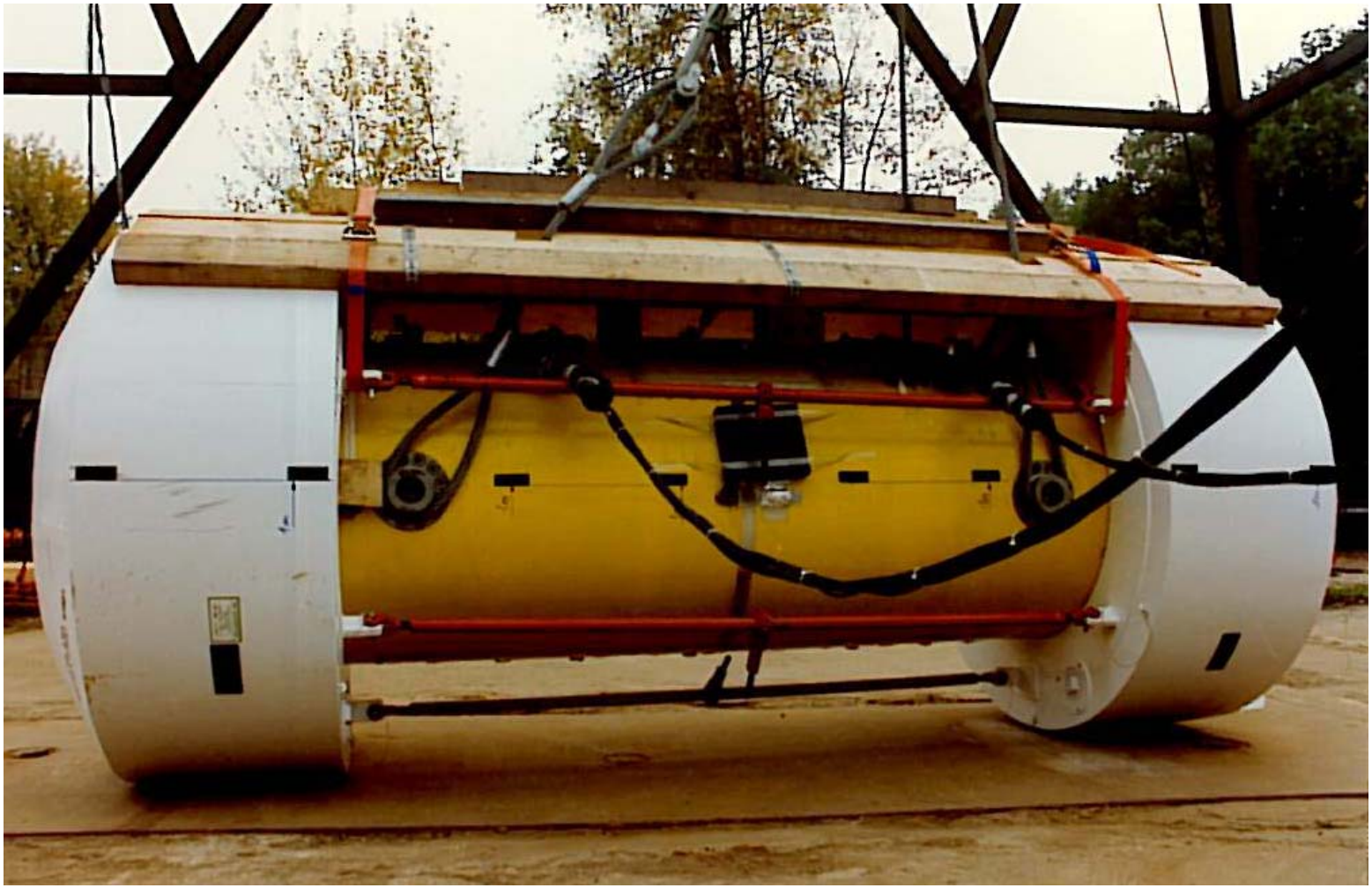

Dechel
15708
T

1.5/708
UPPER IMPACT LIMITER
VALVE NO.5
T