Weld Inlay Qualification Program

NRC RES Meeting on PWSCC Mitigation

Ron Payne, AREVA NP Inc.
Responsible Technical Manager
Ron.Payne@AREVA.com

May 30, 2007

Outline

- **Reactor Vessel Primary Nozzle Inlay Application History**
- **Inlay Tooling / Process Overview**
- **Application of MRP 139 to RV Alloy 600 Primary Nozzle Dissimilar Metal (DM) Welds**
- **Inlay Design/Inspection Considerations**
  - **Mitigative Inlay**
  - **Repair Inlay**
- **ASME Code Activity**
- **PWROG Weld Inlay Qualification Program**

Reactor Vessel Primary Nozzle Inlay Application History

- **Cold leg spool piece replacement performed at Fessenheim with ID machining/PT using robotics delivered through pump**
  - ID operations later qualified for delivery through RV nozzle with lower internals removed in a dry cavity
  - Unlike in France, US and other European plants with Alloy 600 DM welds do not have provision to drain loops with the lower internals removed
    - Would require significant cavity shielding
- **Inlay application at Ringhals with flooded cavity**
  - ~3-5 week schedule for 3 hot legs per unit
  - Included welding of boat sample excavations
  - High personnel exposure with semi-remote delivery
  - Hat and barrel not easily transported LSA

AREVA

PWROG PWR Owners Group

Reactor Vessel Primary Nozzle Inlay Application History

- **AREVA NP design criteria for next generation Inlay methodology is:**
  - flooded cavity
  - parallel operations and schedule optimization
  - delivery system transportable LSA via normal shipment containers
  - significant dose reduction

Dry Cavity Inlay Process Logistics

- **Inverted hat assembly on cavity floor**
- **Manipulator preparation, tool changes from upper deck**
- **Manipulator remote control unit located in a low dose area**
- **Serial operations**
- **AREVA qualified at CETIC for cold leg spool piece replacement**
  - First application at Fessenheim was performed through RCP using the same tooling
- **Ikata used similar approach for RV nozzle inlay during internals replacement**

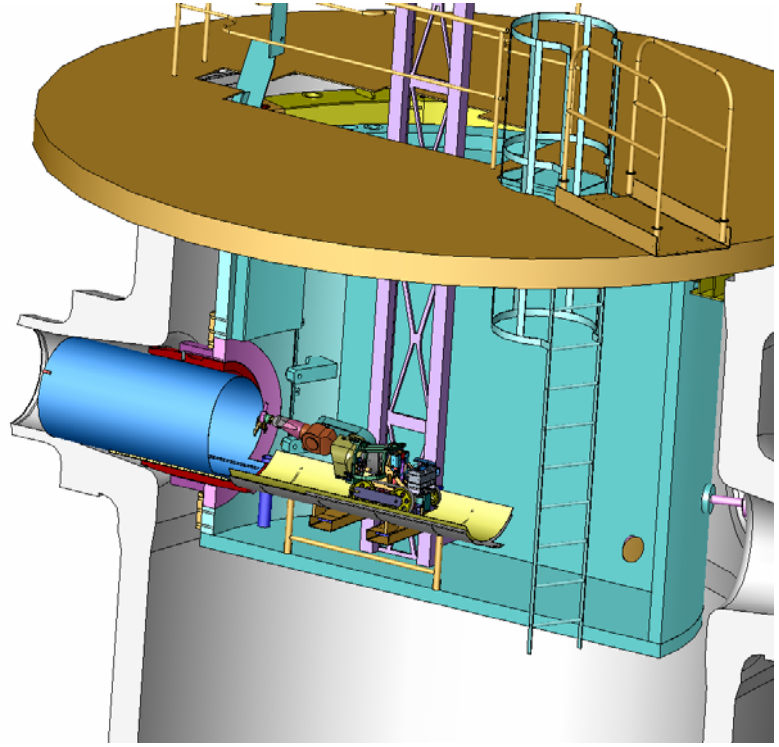

Safe End Repair Project (SERP)

- **Ringhals 4 (2002)**
- **Ringhals 3 (2003)**
- **Performed by Westinghouse and Uddcomb Engineering (now an AREVA subsidiary)**

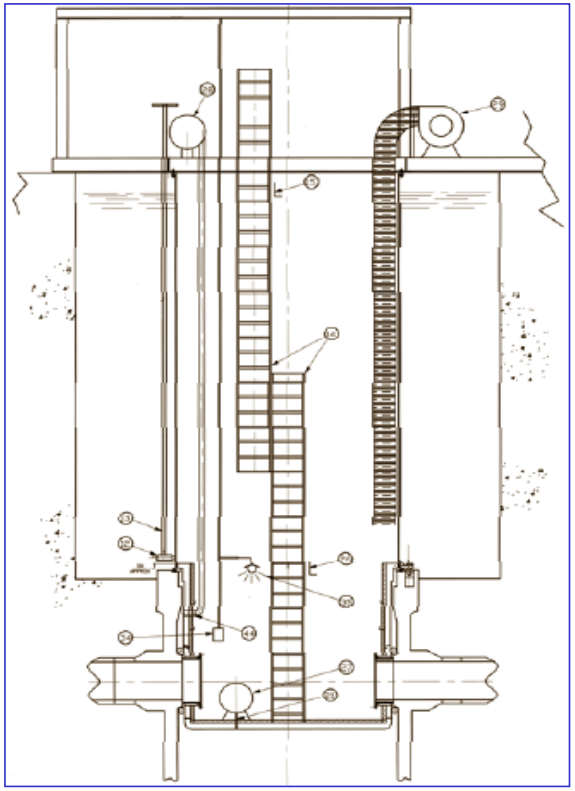

Safe End Repair Project (SERP)

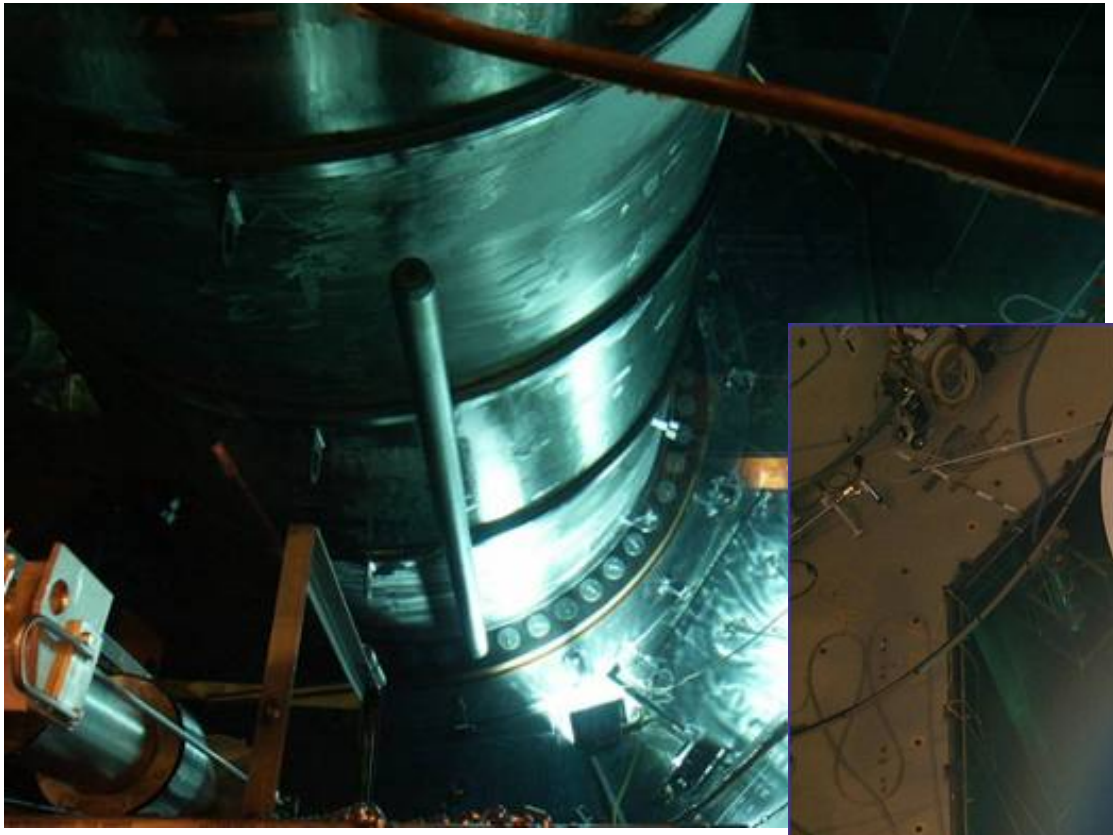

- **Hat and barrel approach**

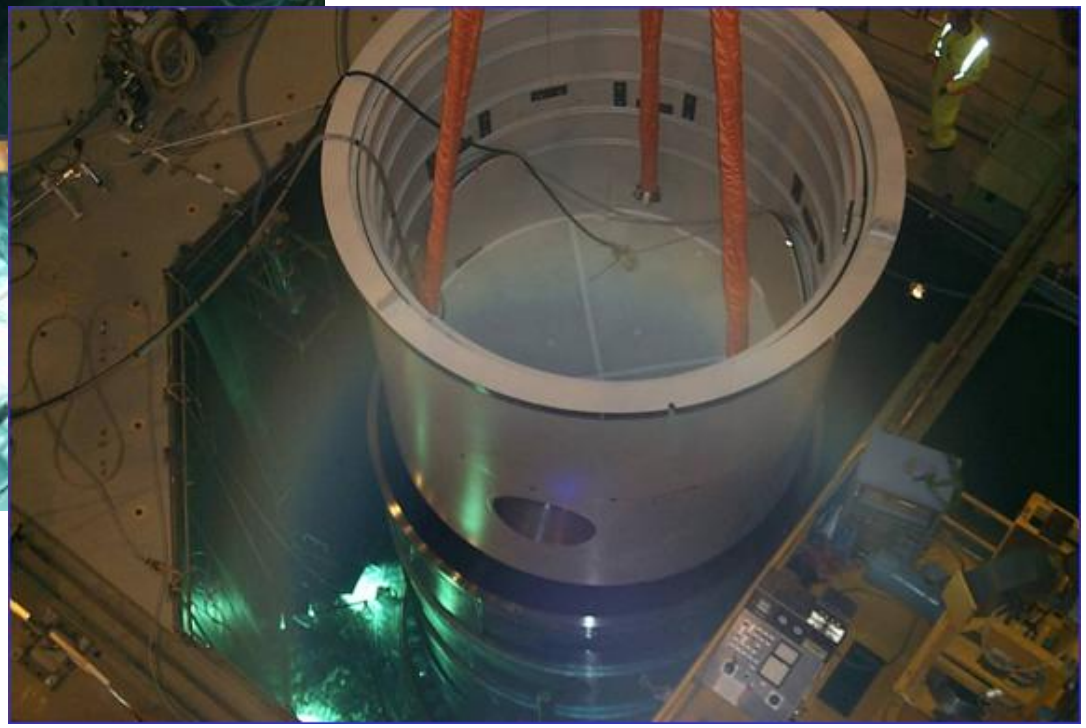

AREVA NP Flooded Cavity Delivery System

- **Fully remote parallel operations**
  - Facilitated by remote failure recovery and redundant system design
  - Engineered cable management
- **All delivery activities from refuel floor**
  - Machining, cleaning and NDE data acquisition controlled at work platform
  - Welding and NDE Data analysis operations controlled from outside containment
- **Primary and secondary FME confinement**
- **Integrated environmental control system to rapidly dry nozzles after draining and after immersion UT operations**
  - Contamination control by maintaining negative pressure within delivery system
  - Also maintains low humidity during welding without disturbing gas coverage

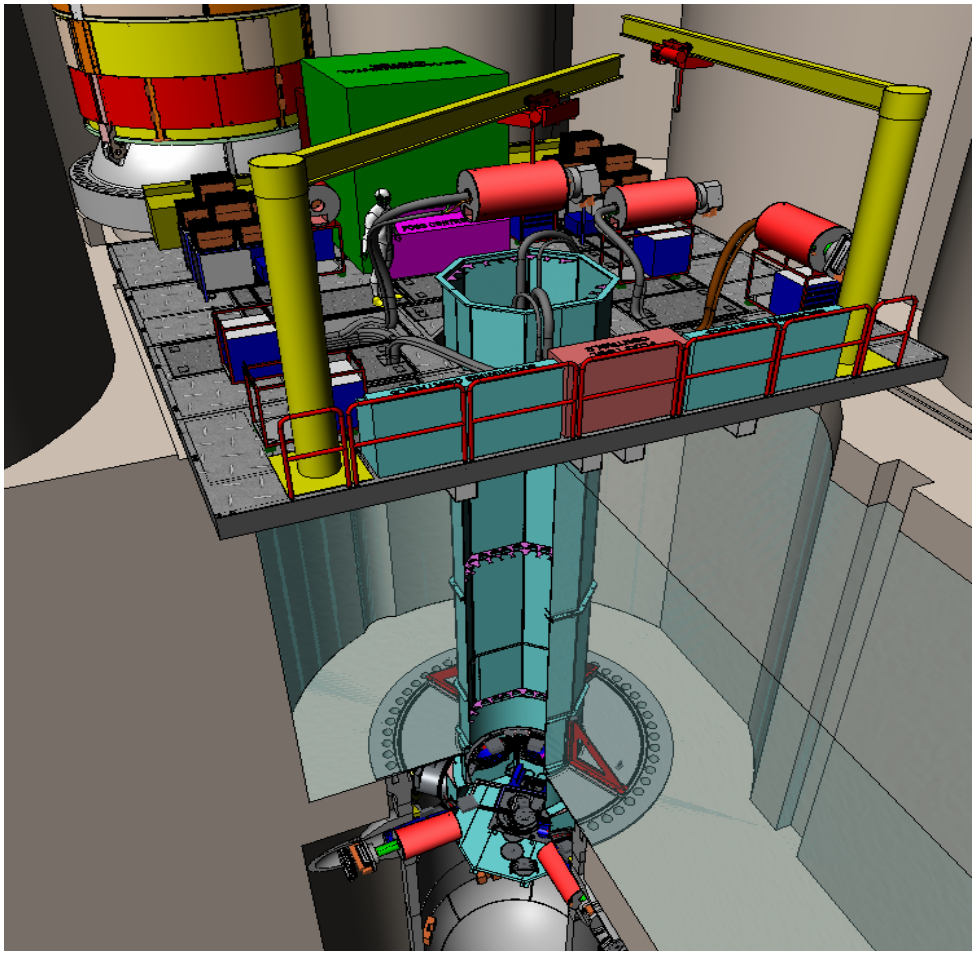

Adaptation of Proven Technologies

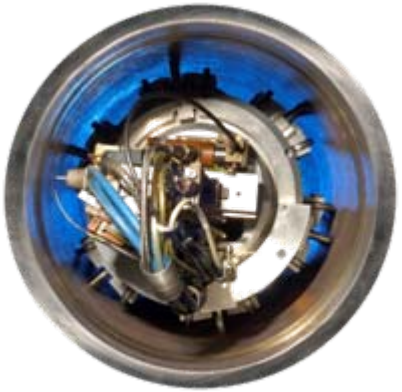

- **Welding, machining, NDE and FOSAR processes based on proven global system technologies**
  - French ARTUR system – utilized at Fessenheim for CL spool replacement
  - German In-Pipe Manipulator – developed to machine BWR piping weld roots for improved UT
  - US remote orbital welding
  - AREVA NP, Uddcomb Engineering experience @ Ringhals
  - TWS RV ISI transducer/NDE technology

AREVA

PWROG PWR Owners Group

Inlay Welding

- **Remote GTAW w/ dual wire feed**
  - Option of double-up or bi-directional welding progression
- **Existing orbital equipment**
  - Large experience base
- **Local cavity ambient temperature temperbead contingency**

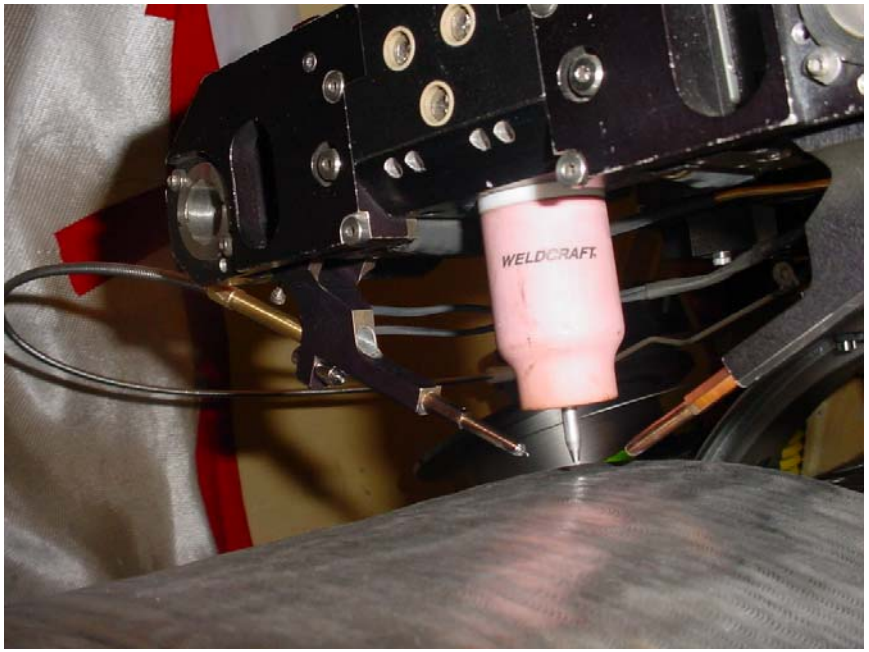

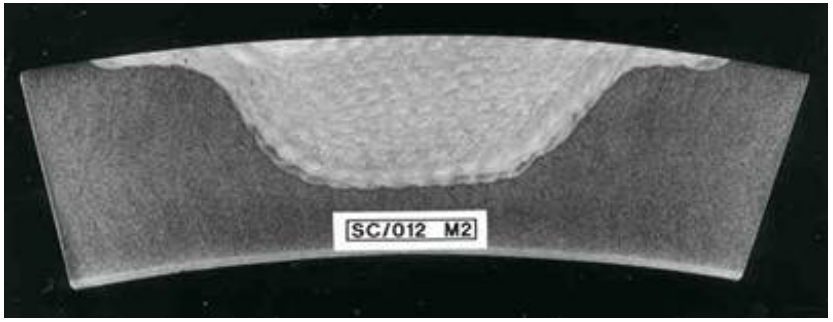

Alloy 52 Filler Material Weldability

- **Weldability Issues**
  - M (modified) chemistry seems to have corrected oxide inclusion issues with the reduction of the deoxidizers (Al And Ti)
  - Fissuring under high restraint and reheat cracking were occurring at a higher rate with 52M
  - Special processing has reduced fissuring in most recent heats
  - Screening is done by metallographic fissuring count without differentiation of cracking mechanisms, i.e. liquation, ductility dip, reheat, etc.
  - High sulfur weldability issue identified through OE during application of weld overlays (WOL) in Fall 2006
  - Confirmed by AREVA testing prior to application of WOL at North Anna in Spring 2007 where the decision was made to apply a pre-emptive 309L layer

High Sulfur in SS Piping and Safe Ends

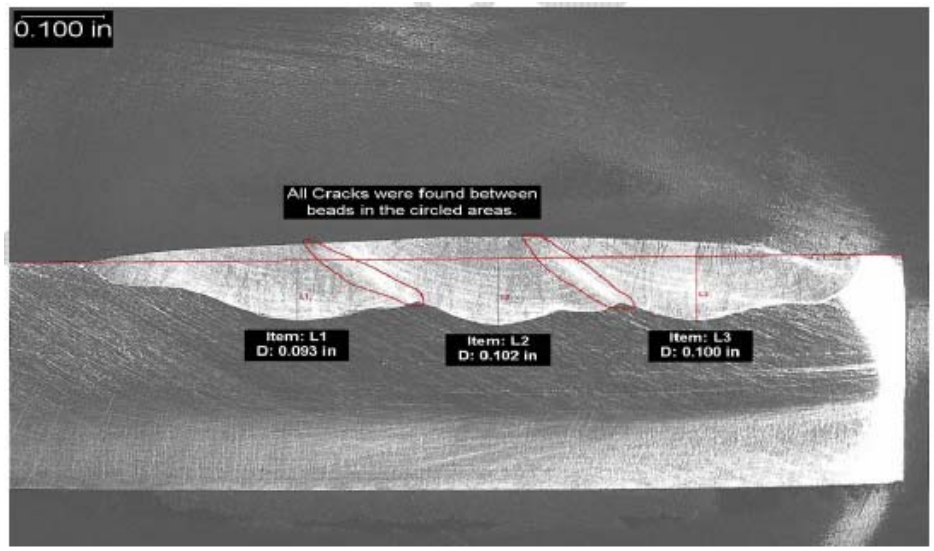

Metallographic cross sections revealed that weld penetration into high sulfur (0.020%) SS base material is much greater than penetration into low sulfur materials.

Weld cross section in SS material containing low sulfur (0.003%) revealing shallower penetration.

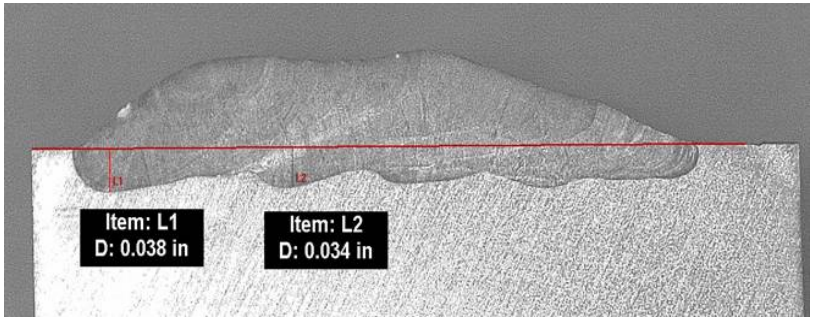

High Sulfur in SS Piping and Safe Ends

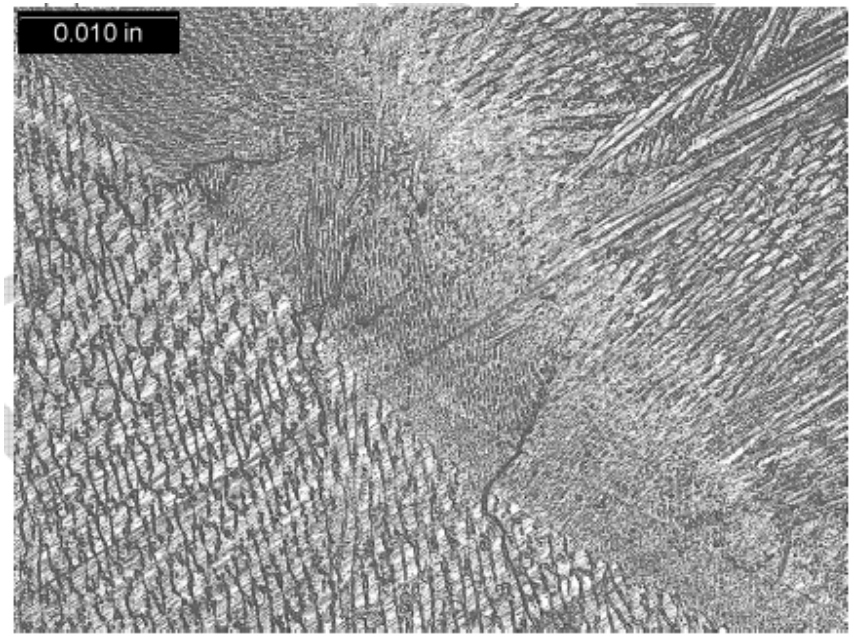

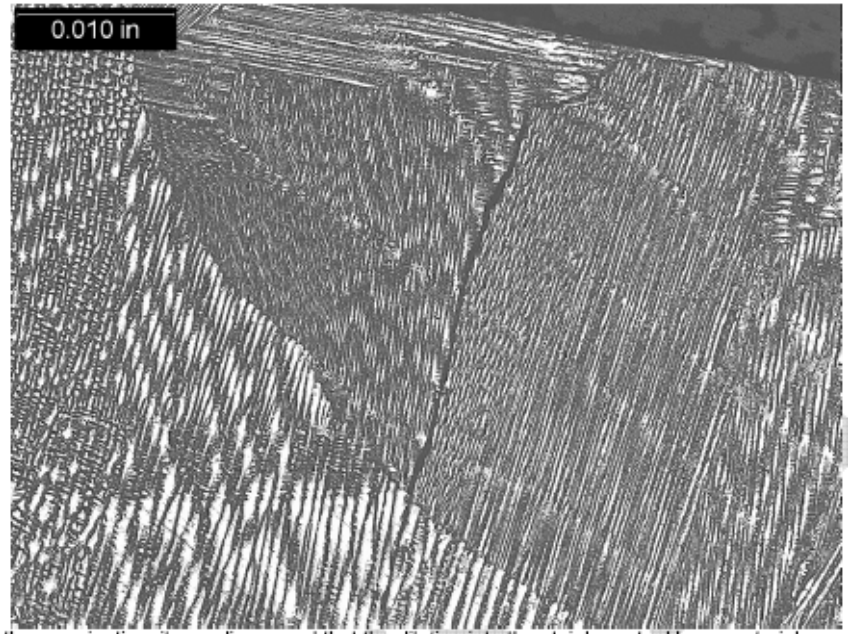

Weld cross sections at 100X. Numerous cracks were found that are oriented perpendicular to the bead-to-bead interface. The cracks are very characteristic of ductility-dip cracking in the underbead and propagated as solidification cracking into the top bead.

Inlay Application on SST Safe End Material with High Sulfur

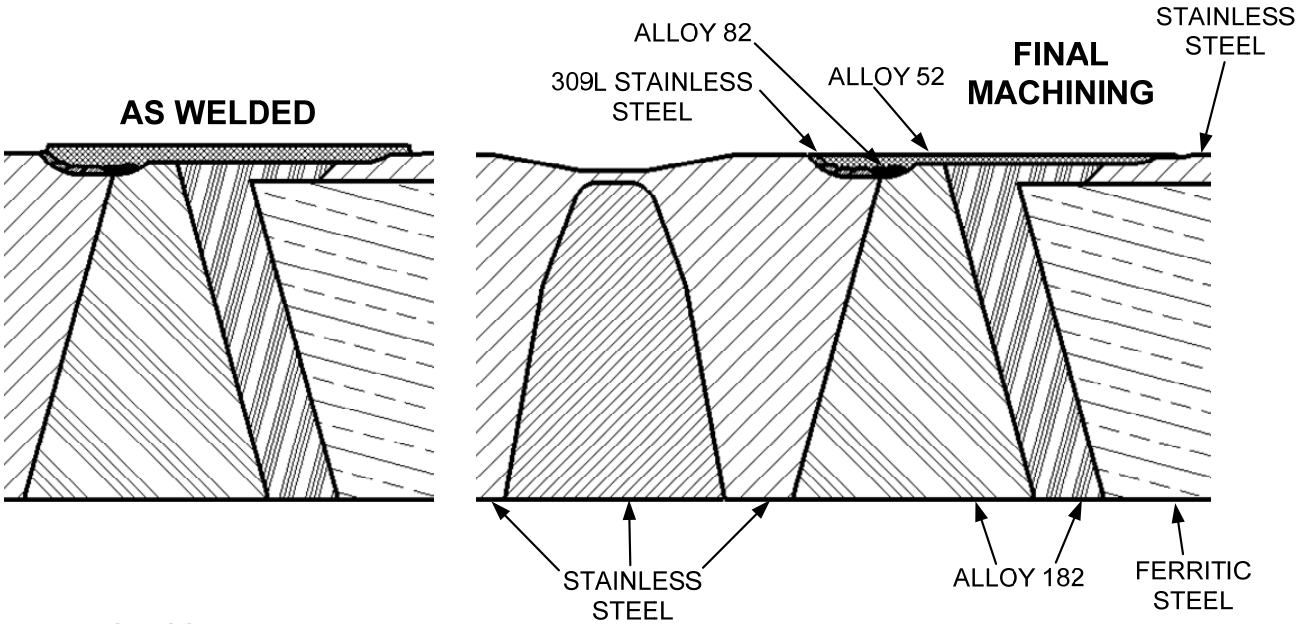

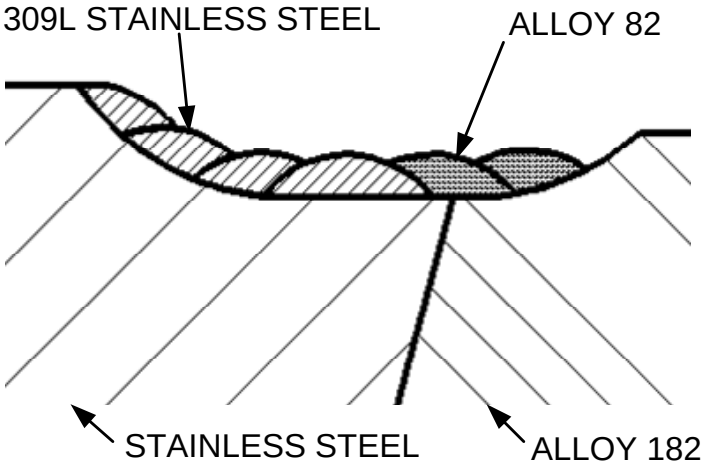

- **Evaluate CMTR for sulfur content**
- **If necessary, apply Alloy 82 and 309L butter layer**

Materials Reliability Program: Primary System Piping Butt Weld Inspection and Evaluation Guideline (MRP-139)

MRP-139 RV Nozzle Configurations

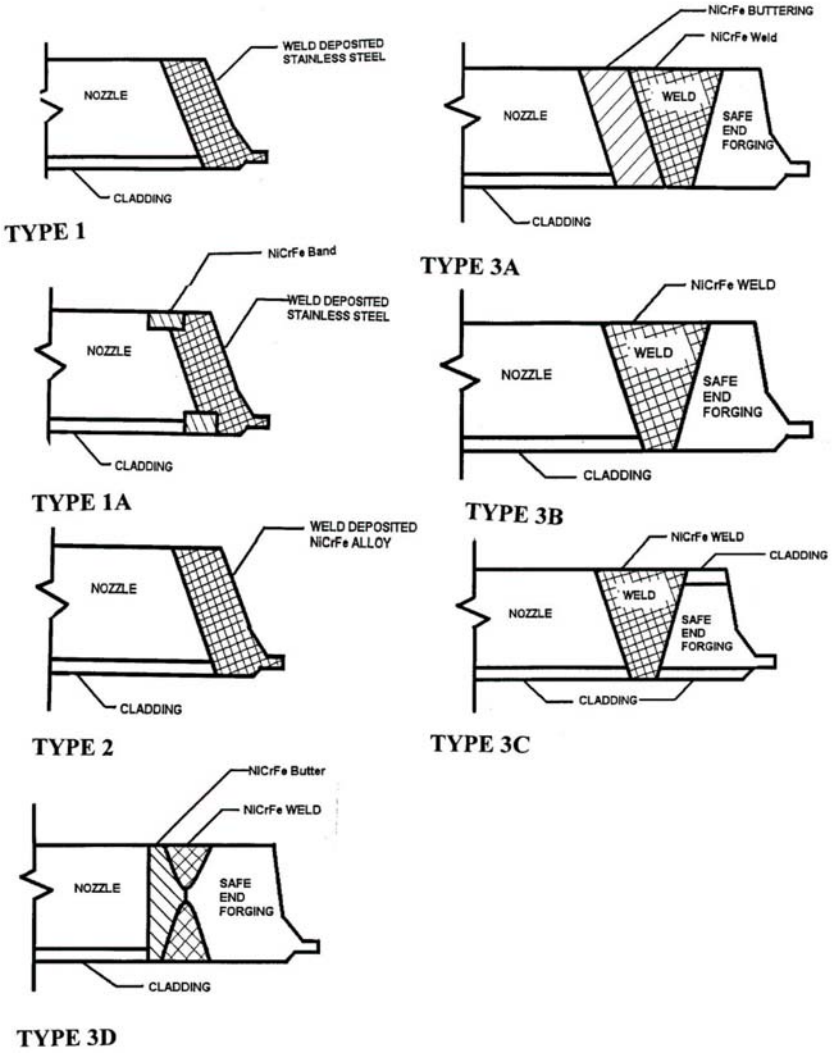

- **Type 3A Weld Geometry is Prevalent 4 Loop A600 DMW Configuration (U.S. Plants)**
  - 23 units with Type 3A
  - 2 units with Type 3B
  - 4 units with Type 3C
  - 2 units with Type 2

Inlay Mitigation - MRP-139

- **PWSCC risk mitigation by inlay**
  - **MRP-139 RV primary nozzle DM weld inspection implementation schedule:**
    - By 12/31/09 – Perform first PDI volumetric inspection of the hot leg.
    - By 12/31/10 – Perform first PDI volumetric inspection of the cold leg.
  - **MRP-139 categorizes DM welds by inspectability, presence of flaws and mitigation applied**
    - Roadmap on following slides outlines inspection requirements for different mitigation technologies for RV nozzle DM welds
  - **Post inlay – Category A, no susceptible material**
    - Current 10 year ISI inspection requirements

Mitigation Decision Matrix

- **RV Primary Nozzle**
  - Inspectable
  - No existing crack(s)

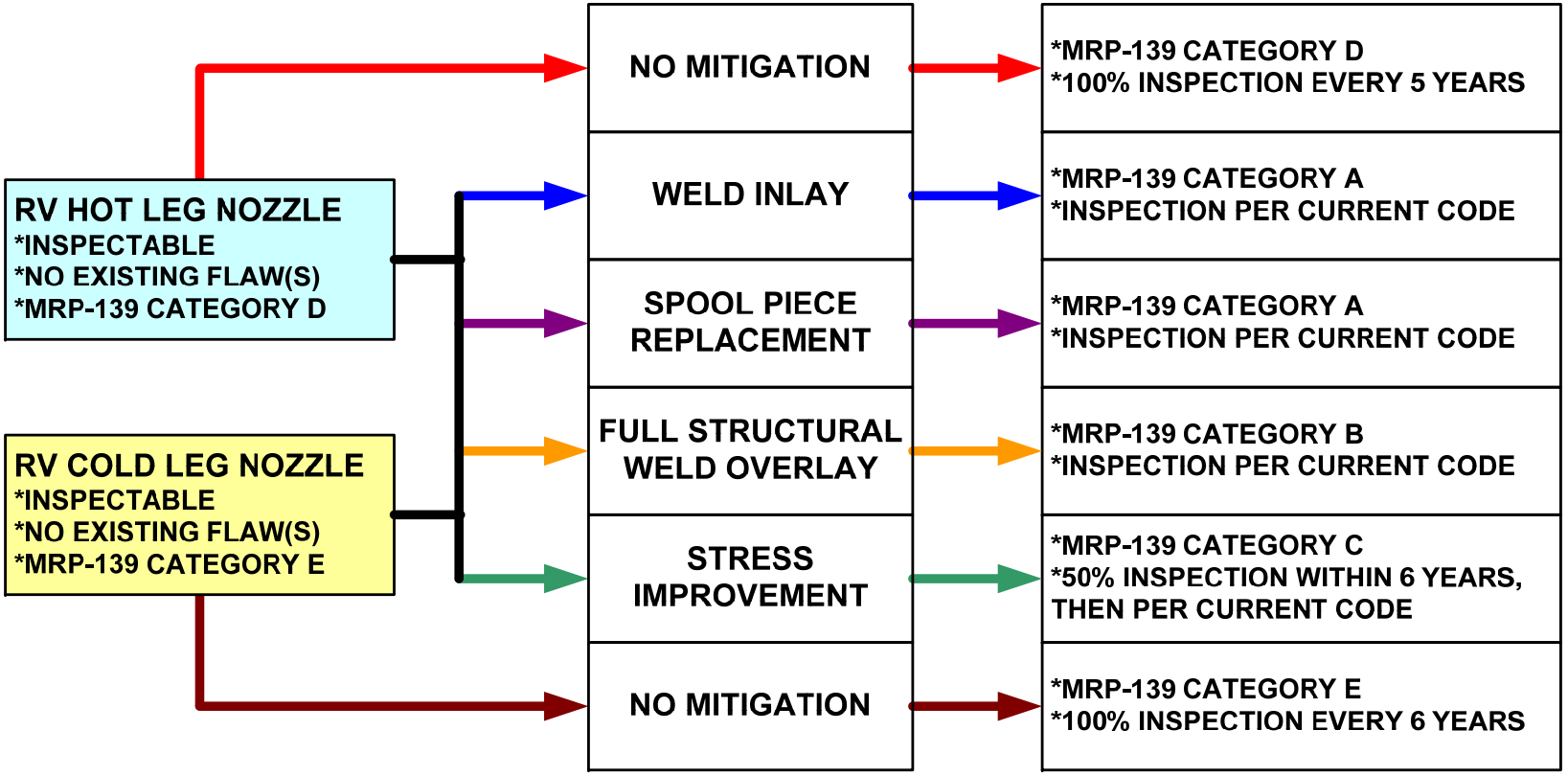

Mitigation Decision Matrix

- **RV Primary Nozzle**
  - Inspectable
  - Existing crack(s)

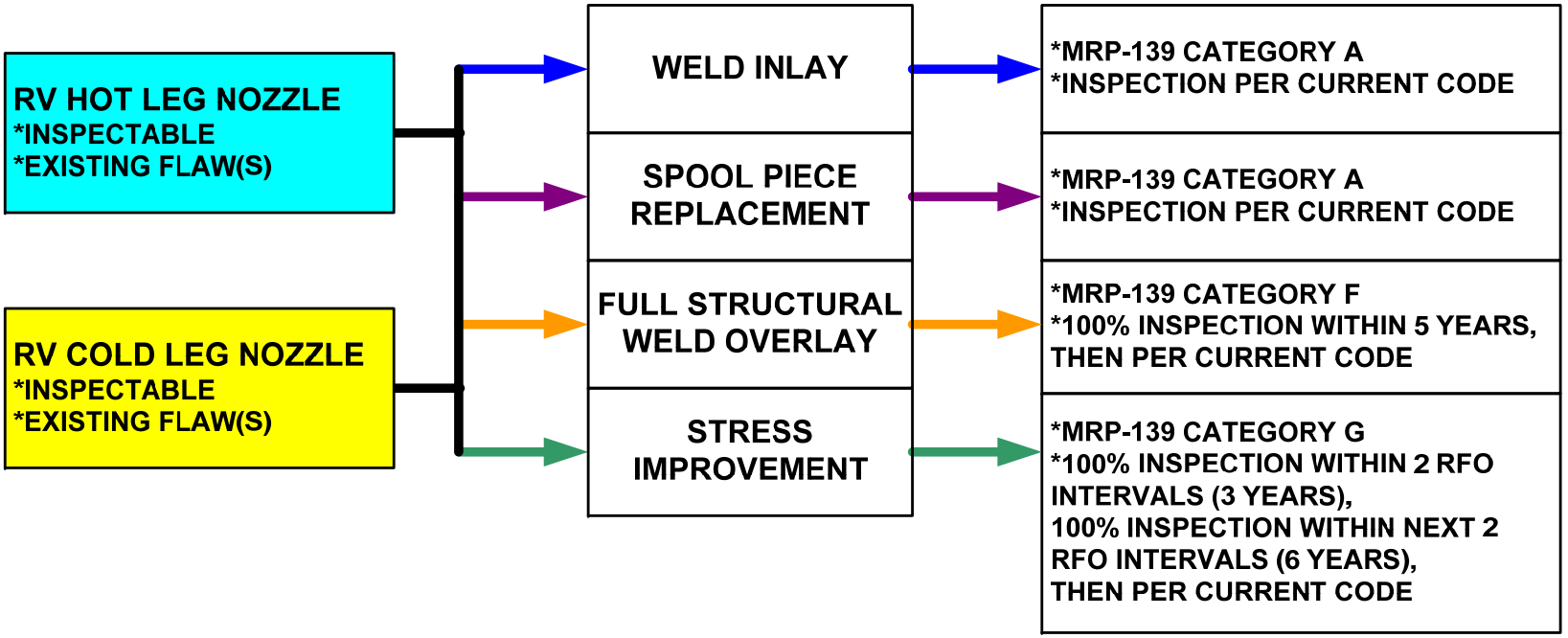

Mitigation Decision Matrix

- **RV Primary Nozzle**
  - Non-Inspectable

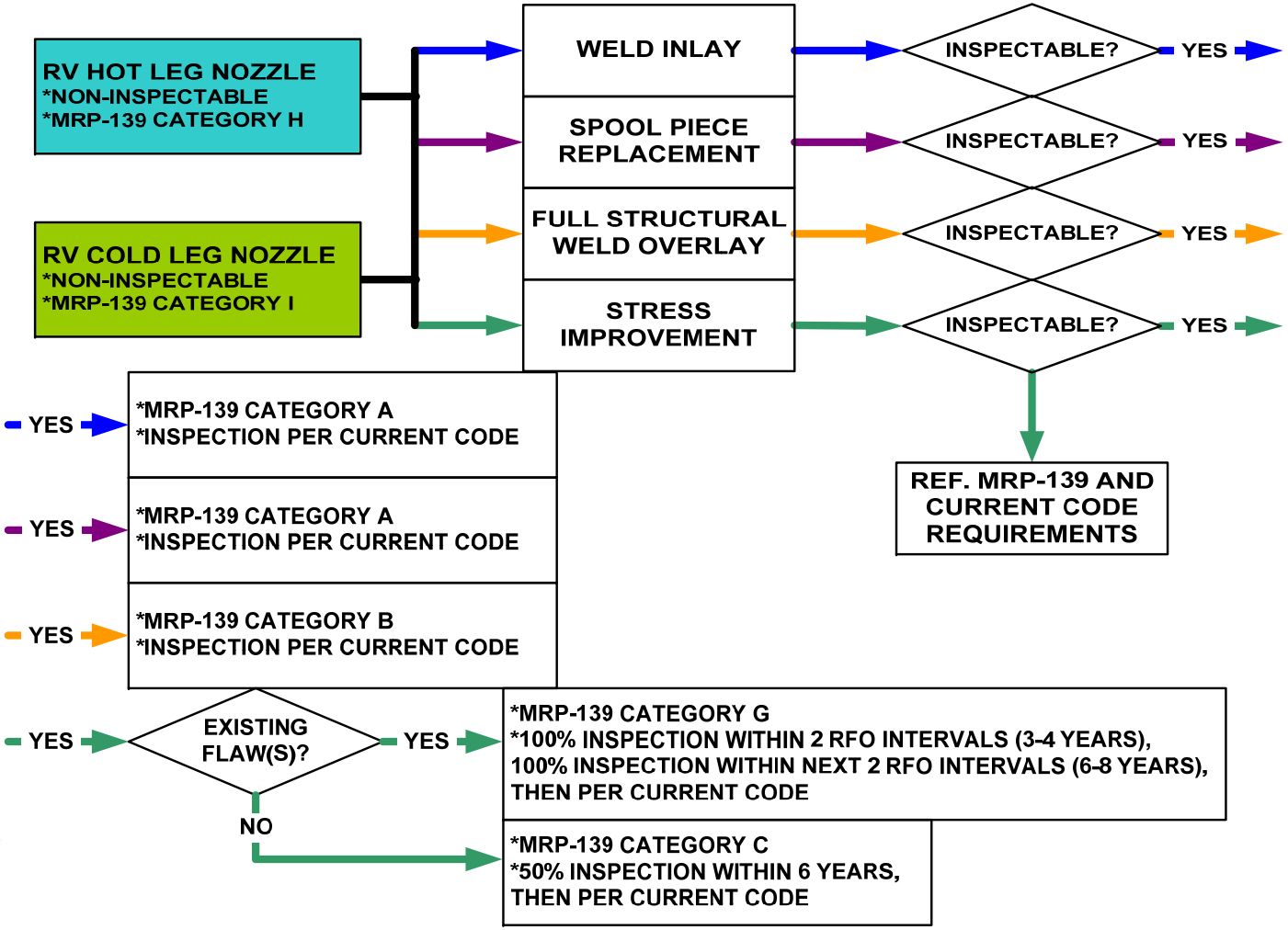

Inlay ASME Code Activity

- **AREVA NP has drafted two code inquiries and responses thereto in order to address the requirements for application of inlay in alloy 600 DM butt welds**
  - 1) Mitigative inlay
  - 2) Repair inlay
- **A task group under the Welding and Special Processes working group will be formed prior to the next code meetings in August to collect and reconcile comments to the draft responses**
- **Approach should streamline ongoing codification of inspection requirements of susceptible A600 DM butt welds by addressing mitigation requirements separately**
- **Electronic copies provided for NRC comment**

AREVA

PWROG PWR Owners Group

Mitigative Inlay Design

- **Type 3A predominant U.S. geometry**
- **ID restored to original geometry**
  - Improved geometry for certain applications (e.g. Type 2 geometry)
  - Ability to improve surface condition / inspectability of SST-SST field weld
- **ET probe used to locate Alloy 182/82 extent and ensure complete coverage**

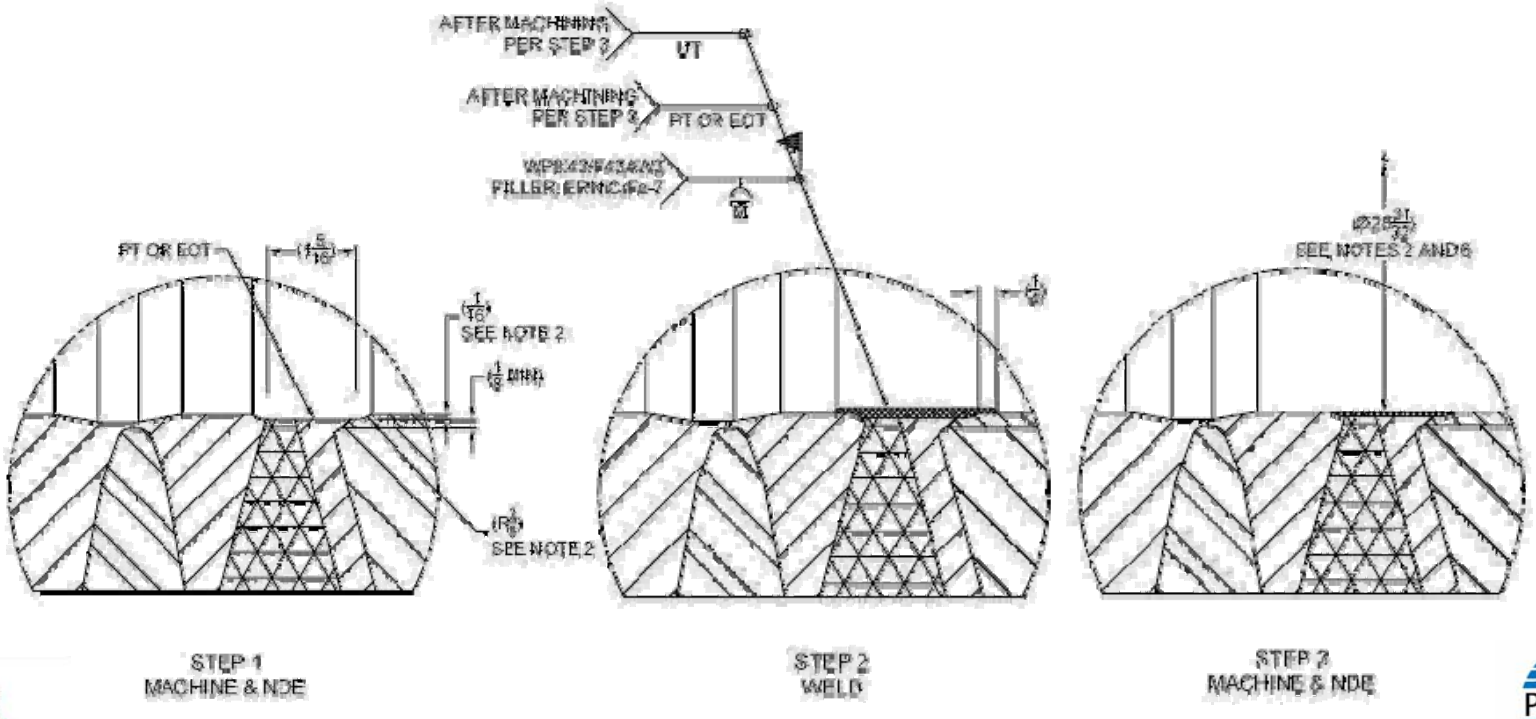

Mitigative Inlay Pre-Service Inspection Acceptance Criteria

- **Section XI Pre-Service Inspection (PSI) requires surface examination only**
- **Proposed above standard PSI acceptance criteria**
  - ET equivalent of PT “white”
  - Volumetric penetrating ET and 0° UT for lack of bond
- **Post inlay classification**
  - Category A, MRP-139
  - Return to current ISI inspection frequency
  - Future ISI inspections use existing PDI qualification and equipment

Repair Inlay Design

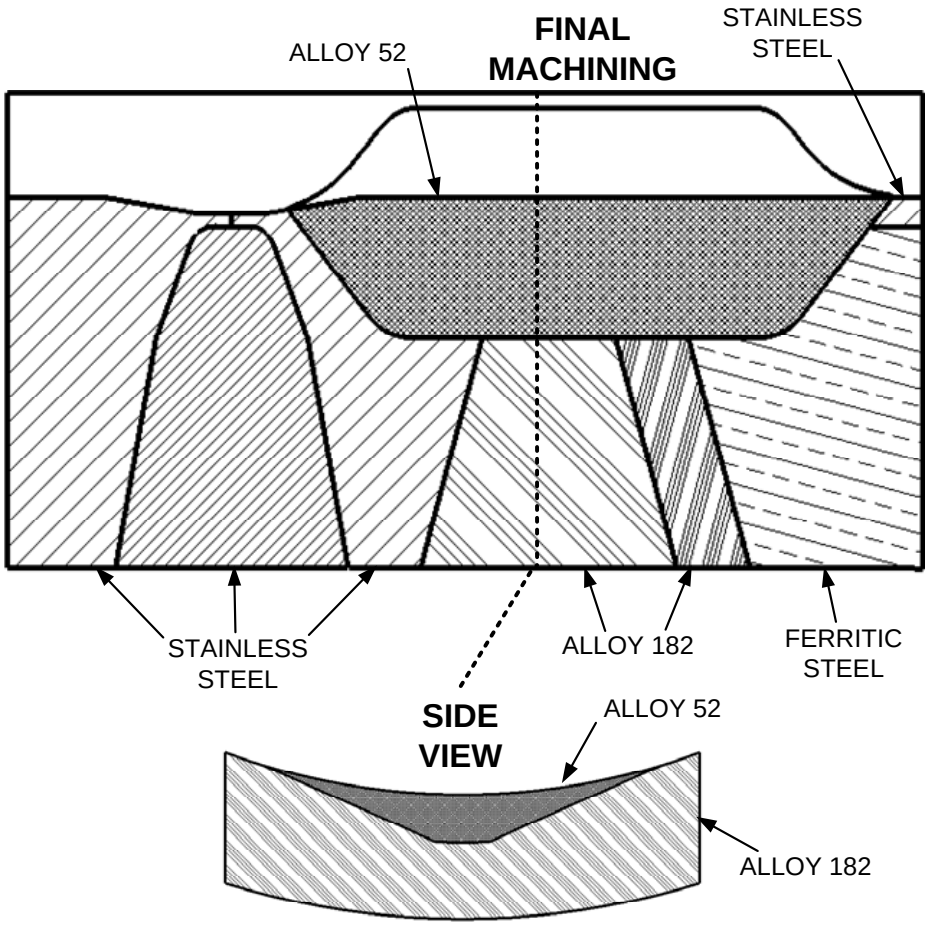

- **Post repair classification**
  - Category A, MRP-139
- **Localized excavation referenced to NDE data through common tooling coordinate system**
- **Ambient temperature temperbead weld contingency**
  - PSI acceptance criteria in accordance with CC638
- **Balance of weld is mitigative geometry and acceptance criteria**
  - Proposed above standard PSI

Inlay Inspection Considerations

- **Final inspection geometry for mitigative and each contingency process is the same and will not require additional PDI qualification or demonstration**
  - i.e. presence of inlay material does not effect current PDI techniques to be used for future ISI
  - Appendix VIII, Supplements 10 and 14 specifically exclude CRC
  - PWROG equivalency testing provides physical trial data to support related EPRI PDI program to develop code case for inclusion of CRC/Inlay in Supplements 10 and 14
- **Added benefit of inlay tooling and processes**
  - Profilometry and machining/welding contingencies provide options to improve surface contour for inspectibility of both the DM weld and safe end to piping weld

Inlay Inspection Considerations

- **Verbiage in current draft (rev. L) of code case to establish inspection requirements for Alloy 600 DM butt welds mitigated with inlay**
  - "Surface examinations shall be performed on these welds after application and prior to return to service to determine that the inlay or cladding presents an acceptable barrier to prevent reactor coolant from contacting the DM weld. Liquid penetrant examination in accordance with IWA-2222 or eddy current examination in accordance with IWA-2223 is required. The acceptance standards of NB-5352 apply except that rounded indications with dimensions greater than 1/16 in. (1.5 mm) or 50% of the thickness of the inlay or clad, whichever is smaller, are unacceptable.“
- **Proposed above standard PSI surface examination acceptance criteria in addition to PDI UT**
  - Self imposed ET equivalent of PT “white”

PWROG Participation

- **The PWROG has committed to the development of RV primary nozzle inlay via a Project Authorization for PDI equivalency testing and integrated system qualification and demonstration**
- **AREVA NP capital investment**

PWROG PA-0298 Scope of Work

- **Task 1**
  - Formation of a utility Core team for design comment and review
  - Design and fabrication of a representative mockup for PDI equivalency testing
    - Actual plant materials used from cancelled unit
  - PDI/EPRI NDE Center and Westinghouse review of mockup design
  - ***Equivalency testing on mockup***
  - Report of all testing results with independent PDI/EPRI NDE Center review
- **Task 2**
  - Qualification preparation at the AREVA NP Training Center.
  - Process qualifications including delivery system, machining, welding, NDE, and FOSAR.

PWROG PA-0298 Scope of Work (Continued)

- **Equivalency Testing on Mockup**
  - Determine the effect that varying thicknesses of Alloy 52 material have on the transmission of ultrasonic sound waves
    - No effect expected
  - Determine if cladding thickness can be accurately measured during the inspection process
  - Verify existing PDI qualifications for RV primary nozzle weld geometries are applicable for range of Inlay geometries
  - Independently witnessed by PDI/EPRI NDE Center.

Summary

- **The application of corrosion resistant cladding / inlay has been successfully demonstrated in both BWR and PWR units**
- **The PWROG and EPRI MRP/PDI programs are pro-active and coordinated to address application of mitigative and repair inlays in PWR RV primary nozzles**
- **The first application of the next generation, fully remote RV primary nozzle inlay system will be available for the fall 2008 outage season**