McGuire Nuclear Station
Units 1 and 2

ODCM

Offsite Dose
Calculation Manual
2007

Duke Power SM
A Duke Energy Company

McGuire Nuclear Station
Units 1 and 2

OFFSITE DOSE CALCULATION MANUAL (ODCM)

Prepared By: C. D. Ingram **General Office Radiation Protection**	**Approved By: L. E. Haynes** **Technical Manager, RP, Nuclear GO**
Reviewed By: W. C. Spencer **MNS Radiation Protection**	**Approved By: R. T. Repko** **MNS Station Manager**
REVISION NUMBER **48**	**EFFECTIVE YEAR** **2007**

TABLE OF CONTENTS

Executive Summary . . . . . Executive Summary-1

1.0 Radwaste Systems 1-1
1.0.1 Liquid Radwaste Processing 1-1
1.0.2 Gaseous Radwaste Processing 1-3
1.0.2.1 Gas Collection System 1-3
1.0.2.2 Containment and Auxiliary Building Ventilation 1-3
1.0.2.3 Secondary Systems 1-4

2.0 Release Rate Calculations 2-1
2.0.1 Liquid Release Rate Limit Calculations 2-1
2.0.1.1 RC Discharge Release Rate Limit Calculation 2-1
2.0.1.2 WC and WWCB Discharge 2-2
2.0.2 Gaseous Release Rate Limit Calculations 2-6
2.0.2.1 Unit Vent Discharge Release Rate Limit Calculation 2-6

3.0 Setpoint Calculations 3-1
3.0.1 Liquid Radiation Monitor Setpoint Calculations 3-1
3.0.1.1 Waste Monitor Tank Setpoints (EMF 49) 3-2
3.0.1.2 Containment Ventilation Unit Condensate Drain Tank Setpoints (EMF 44) . 3-3
3.0.1.3 Turbine Building Sump to RC Setpoints (EMF 31). 3-4
3.0.1.4 Turbine Building Sump to WC Setpoints (EMF 31). 3-5
3.0.2 Gaseous Radiation Monitor Setpoint Calculations 3-8
3.0.2.1 Containment Air Release and Addition (VQ) Setpoints (EMF 39) . . . 3-9
3.0.2.2 Containment Purge (VP) and Incore Purge (IP) Setpoints (EMF 39, EMF 36) . 3-10
3.0.2.3 Waste Gas Decay Tank (WGDT) Setpoints (EMF 50, EMF 36) . . . 3-13

4.0 Effluent Dose Models 4-1
4.0.1 Liquid Effluent Dose Model for the Maximum Exposed Individual 4-1
4.0.2 Gaseous Effluent Dose Model for the Maximum Exposed Individual 4-7
4.0.3 Direct Radiation 4-18
4.0.4 Effluent Apportionment 4-18

5.0 Fuel Cycle Calculations 5-1
5.0.1 Milling 5-1
5.0.2 Conversion 5-1
5.0.3 Enrichment 5-1
5.0.4 Fuel Fabrication 5-1
5.0.5 Nuclear Power Production 5-2
5.0.6 Fuel Reprocessing 5-2
5.0.7 40CFR190 Total Dose Determination 5-2

6.0 Environmental Locations 6-1
6.0.1 Site Description and Sample Locations 6-1
6.0.2 Land Use Census Data 6-1
6.0.3 McGuire Meteorology: Relative Air Concentrations and Deposition 6-8
6.0.3.1 XOQDOQ Methodology and Assumptions 6-8
6.0.3.2 Meteorological Data 6-8
6.0.3.3 Annual XOQDOQ Comparison to the ODCM 6-9

7.0 Licensee Initiated Changes 7-1

Appendices

Appendix A: Dose Factors for Exposure to a Semi-Infinite Cloud of Noble Gases . . . A-1
Appendix B: P_i Dose Factors for use in the Gaseous Release Rate Limit Calculations . . . B-1
Appendix C: A_i Adult Dose Factors for use in the Liquid Dose Calculations C-1
Appendix D: A_i Teen Dose Factors for use in the Liquid Dose Calculations . . . D-1.
Appendix E: A_i Child Dose Factors for use in the Liquid Dose Calculations . . . E-1
Appendix F: A_i Infant Dose Factors for use in the Liquid Dose Calculations F-1
Appendix G: R_i Adult Dose Factors for use in the Gaseous Dose Calculations G-1
Appendix H: R_i Teen Dose Factors for use in the Gaseous Dose Calculations H-1
Appendix I: R_i Child Dose Factors for use in the Gaseous Dose Calculations I-1
Appendix J: R_i Infant Dose Factors for use in the Gaseous Dose Calculations J-1

LIST OF FIGURES

1.0-1 Liquid Radwaste System 1-2
1.0-2 Gaseous Radwaste System (2 pages) . . . . . 1-5.
2.0-1 Liquid Radwaste Discharge Locations 2-3
2.0-2 RC Discharge to Lake Norman 2-4
2.0-3 WC Discharge to the Catawba River 2-5
2.0-4 Unit Vent Release Points 2-10
2.0-5 WMF, WHA, 2-SB Release Points 2-11
6.0-1 Sampling Locations Map (Site Boundary). 6-5
6.0-2 Sampling Locations Map (Ten Mile Radius) 6-6
6.0-3 Land Use Census Map 6-7

LIST OF TABLES

3.0-1 Cs-137 Equivalents 3-7
3.0-2 Xe-133 Equivalents 3-14
6.0-1 Sampling Locations 6-2
6.0-2 TLD Sites 6-3
6.0-3 Land Use Census Results 6-4
6.0-4 MNS Atmospheric Stability Frequency (1988-1992) 6-9
6.0-5 MNS Frequency of Wind Direction and Speed (1988-1992) 6-9
6.0-6 MNS Limiting χ/Q and D/Q Values (1988-1992) 6-10
6.0-7 MNS Delta-T Ranges per Vertical Separation Distances 6-10
6.0-8 McGuire χ/Q Average Values (1988-1992) 6-11
6.0-9 McGuire D/Q Average Values (1988-1992) 6-12

EXECUTIVE SUMMARY

The McGuire Nuclear Station (MNS) Offsite Dose Calculation Manual (ODCM) provides the methodology and parameters to be used in the calculation of offsite doses due to normal operation radioactive liquid and gaseous effluents to assure compliance with the dose limitations of the Selected Licensee Commitments (SLCs, UFSAR Chapter 16) and Technical Specifications. These dose limitations assure that:

(1) the concentration of radioactive liquid effluents released from the site to the unrestricted area will be limited to 10 times the effluent concentration (EC) levels of 10CFR20, Appendix B, Table 2, and 2.0E-04 μCi/ml for dissolved and entrained noble gases;

(2) the exposures to any individual member of the public from radioactive liquid effluents will not result in doses greater than the ALARA design objectives of 10CFR50, Appendix I or the 10CFR20 limits;

(3) the dose rate at any time at the site boundary from radioactive gaseous effluents will be limited to: for noble gases; less than or equal to 500 mrem/yr to the whole body, and less than or equal to 3000 mrem/yr to the skin; and for iodine-131 and iodine-133, for tritium, and for all radioactive materials in particulate form with half-lives greater than 8 days; less than or equal to 1500 mrem/yr to any organ;

(4) the exposure to any individual member of the public from radioactive gaseous effluents will not result in doses greater than the ALARA design objectives of 10CFR50, Appendix I or the 10CFR20 limits; and

(5) the dose to any individual member of the public from the nuclear fuel cycle will not exceed the limits of 40CFR190.

The methodology and parameters used to assure compliance with the dose limitations described above shall be used to prepare the radioactive liquid and gaseous effluent reports required by the SLCs and Technical Specifications. Dose calculations that demonstrate compliance with 40CFR190 will be considered to demonstrate compliance with the 10CFR20 0.1-rem annual dose

limit. The ODCM also provides the methodology and parameters to be used in the calculation of radioactive liquid and gaseous effluent monitoring instrumentation alarm/trip setpoints to assure compliance with the concentration and dose rate limitations of the SLCs and Technical Specifications. Normally RETDAS, a computer code that implements NUREG-0133 methodology, is used for the calculation of offsite doses, but the ODCM also provides a method for the calculation of offsite doses when RETDAS is not available.

The ODCM has been prepared as generically as possible in order to minimize the need for revisions. However, some changes to the ODCM such as land-use census data are expected on an annual basis. Any changes to the methodology and parameters to be used in this ODCM shall be reviewed by knowledgeable individual(s), and approved by the Station Manager and the General Office Radiation Protection Manager prior to implementation. Changes to the ODCM shall be submitted to the Nuclear Regulatory Commission in accordance with the SLCs and Technical Specifications.

The ODCM does not replace any station implementing procedures. Programmatic controls for radioactive effluents and radiological environmental monitoring are contained in the Administrative Controls chapter of the Technical Specifications. Procedural details for radioactive effluents and radiological environmental monitoring consisting of licensee commitments, applicability, remedial actions, surveillance requirements, and the bases for these requirements are contained in Section 16.11 of the SLCs.

1.0 RADWASTE SYSTEMS

1.0.1 LIQUID RADWASTE PROCESSING

The liquid radwaste system at McGuire Nuclear Station is used to collect and treat liquid chemical and radiochemical byproducts of unit operation. The system produces effluents that can be reused in the plant or discharged to the environment. The means of treatment vary with waste type and desired product in the various systems:

(A) Filtration - Waste sources are filtered during processing. In some cases, such as the Floor Drain Tank (FDT) subsystem of the Liquid Waste System (WL), filtration may be the only treatment required.

(B) Adsorption - Adsorption of halides and organic chemicals by activated charcoal (carbon filter) may be used in treating waste in the Laundry and Hot Shower Tank (LHST). The carbon filter is designed to remove organophosphates and free chlorine. Activated charcoal need not be used when these chemicals are not present (e.g., phosphate detergents are not used at the station). Ion exchange resin or other media may be used in the carbon filter vessel as desired.

(C) Ion Exchange - Ion exchange is used to remove radioactive cations from solution, as in the case of the FDT waste after removal of organics by carbon filtration (adsorption). Ion exchange can also be used in removing both cations (cobalt, manganese) and anions (chloride, fluoride) from evaporator distillates in order to purify the distillates for reuse as makeup water. Distillate from the Boron Recycle Evaporator in the Boron Recycle System (NB) can be treated by this method.

(D) Gas Stripping - Removal of gaseous radioactive fission products is accomplished in the NB Evaporator.

(E) Distillation - Production of pure water from the waste by boiling it away from the contaminated solution which it was originally contained is accomplished by the NB both evaporator. Proper control of the process will yield water that can be reused for makeup. Polishing of this product can be achieved by ion exchange as pointed out above.

(F) Concentration - In the NB Evaporator, dissolved chemicals are concentrated in the lower shell as water is boiled away. The dilute boron is normally concentrated to 4% so that it may be reused for makeup to the reactor coolant system.

Figure 1.0-1 is a schematic representation of the liquid radwaste system at McGuire.

Figure 1.0-1 McGuire Nuclear Station Liquid Radwaste System

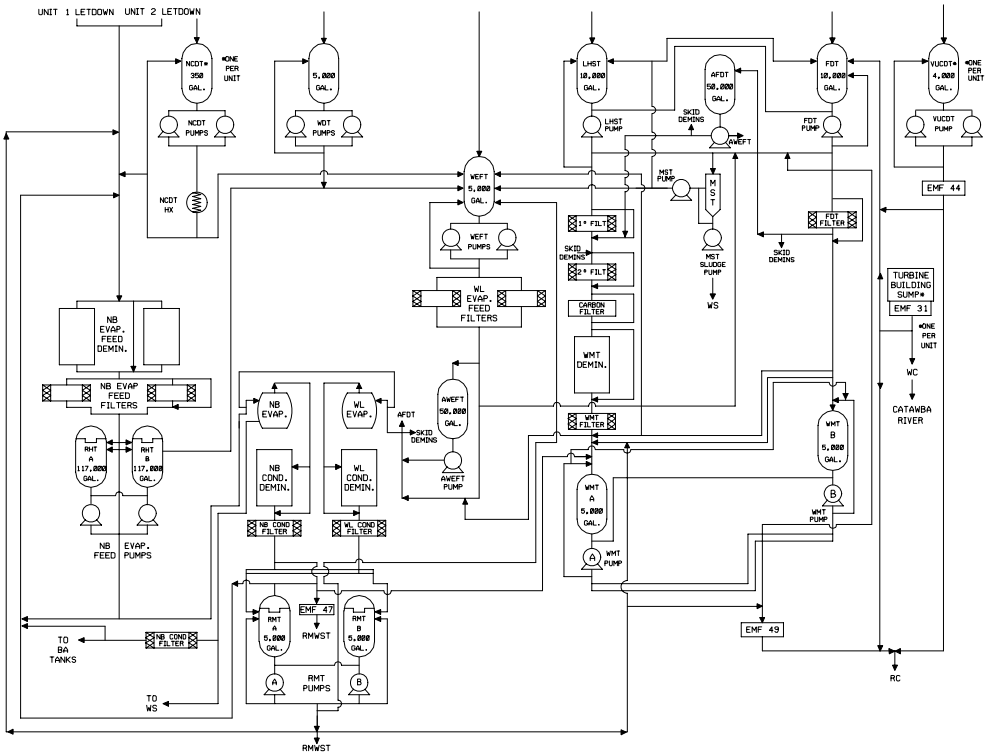

1.0.2 GASEOUS RADWASTE PROCESSING

The Gaseous Waste System (WG) for McGuire is designed with the capability of processing the fission product gases from contaminated reactor coolant fluids resulting from operation. The design basis for the WG shown schematically in Figure 1.0-2 is the retention, through the plant lifetime, of all the gaseous fission products to be discharged from the reactor coolant system to the Chemical and Volume Control System (NV) and other plant systems to eliminate the need for intentional discharge of radioactive gases from the waste gas holdup tanks. Actual system operation is aimed at maximizing storage time for decay prior to infrequent releases. Unavoidable sources of low level radioactive gaseous discharge to the environment will be from periodic purging operations of the containment, and through the secondary system air ejector. With respect to the former, the potential contamination is expected to arise from non-recyclable reactor coolant leakage. With respect to the air ejector, the potential source of contamination will be from leakage of the reactor coolant to the secondary system through defects in steam generator tubes. The gaseous waste disposal system includes two waste gas compressors, two catalytic hydrogen recombiners, six gas decay storage tanks for use during normal power generation, and two gas decay storage tanks for use during shutdown and startup operations.

1.0.2.1 GAS COLLECTION SYSTEM

The gas collection system combines the waste hydrogen and fission gases from the volume control tanks, the boron recycle and liquid waste gas stripper evaporators, and other sources produced during normal operation or the gas collected during the shutdown degasification (high percentage of hydrogen), and cycles it through the catalytic recombiners to convert hydrogen to water. After the water vapor is removed, the resulting gas stream is transferred from the recombiner into the waste gas decay tanks (WGDTs), where the accumulated activity may be contained in six approximately equal parts. From the decay tanks, the gas flows back to the compressor suction to complete the loop circuit.

1.0.2.2 CONTAINMENT AND AUXILIARY BUILDING VENTILATION

Non-recyclable reactor coolant leakage occurring either inside the containment or inside the auxiliary building will generate gaseous activity. Gases resulting from leakage inside the containment atmosphere will be circulated through a charcoal adsorber and a particulate filter prior to release to the atmosphere.

Gases resulting from leakage inside the auxiliary building are released, without further decay, to the atmosphere. The ventilation exhaust from potentially contaminated areas in the auxiliary building is passed through charcoal adsorbers and particulate filters to reduce releases to the atmosphere upon a radiation monitor alarm.

1.0.2.3 SECONDARY SYSTEMS

The gases removed from the secondary system by the air ejectors are discharged to the unit vent. If the secondary system contains activity, the steam generator blowdown may be either discharged directly to the condenser cooling water system or through demineralizers to reduce activity levels.

Gland leak-off steam, which represents a minor source of activity, is routed to the gland condenser. The non-condensable gases are exhausted to the unit vent; the condensables are condensed and drained to the condensate storage tank.

Figure 1.0-2 is a schematic representation of the gaseous radwaste system at McGuire.

Figure 1.0-2 McGuire Nuclear Station Gaseous Radwaste System

Page 1 of 2

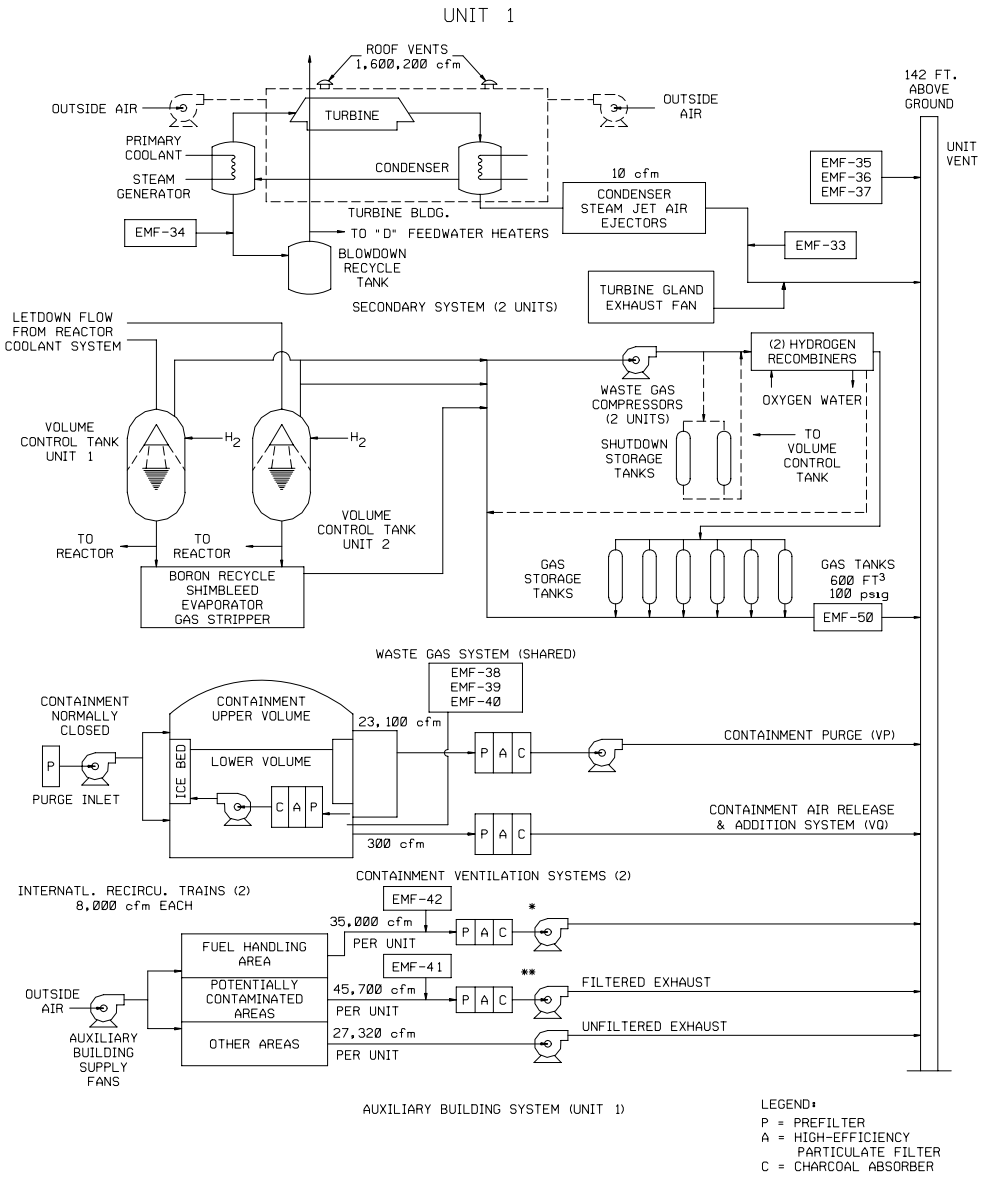

* FUEL HANDLING AREA IS NORMALLY UNFILTERED. UPON A RADIATION ALARM BY EMF-42, THE EXHAUST WILL BE DIVERTED TO THE FILTER MODE.

** POTENTIALLY CONTAMINATED AREAS OF THE AUXILIARY BUILDING ARE NORMALLY UNFILTERED. UPON A RADIATION ALARM BY EMF-41, THE EXHAUST WILL BE DIVERTED TO THE FILTERED MODE.

Figure 1.0-2 McGuire Nuclear Station Gaseous Radwaste System Page 2 0f 2

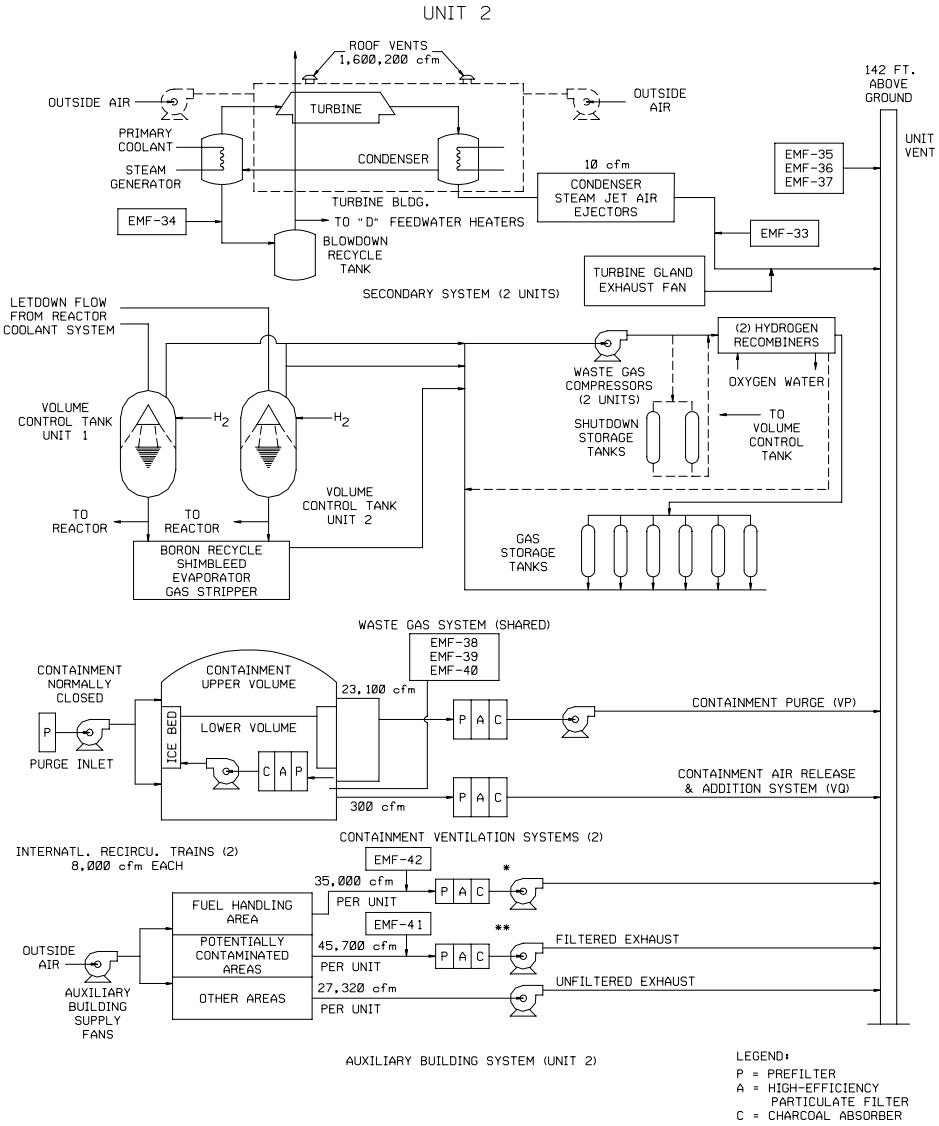

*FUEL HANDLING AREA IS NORMALLY UNFILTERED. UPON A RADIATION ALARM BY EMF-42, THE EXHAUST WILL BE DIVERTED TO THE FILTER MODE.

**POTENTIALLY CONTAMINATED AREAS OF THE AUXILIARY BUILDING ARE NORMALLY UNFILTERED. UPON A RADIATION ALARM BY EMF-41, THE EXHAUST WILL BE DIVERTED TO THE FILTERED MODE.

2.0 RELEASE RATE CALCULATIONS

2.0.1 LIQUID RELEASE RATE LIMIT CALCULATIONS

There are two liquid radwaste discharge points to the environment at McGuire; (1) the Condenser Cooling Water System (RC) discharge point to Lake Norman, and (2) the Conventional Waste Water System (WC) and Waste Water Collection Basin (WWCB) discharge point to the Catawba River downstream of Cowan's Ford Dam (See Figure 2.0-1).

2.0.1.1 RC DISCHARGE RELEASE RATE LIMIT CALCULATION

Liquid releases to Lake Norman through the RC pathway normally contain the radioactive releases from the site including effluents from the waste monitor tanks and containment ventilation unit condensate drain tanks. The RC discharge point can also contain Turbine Building Sump (TBS) releases, however TBS effluent is normally released through WC. Condenser unwatering (WU) is normally released to the WWCB discharge point. Each unit has four RC pumps that pump 2.5E5 gpm each and provide dilution for releases. Each release path has a radiation monitor (EMF) that is used to monitor the liquid effluent (See Figure 2.0-2).

To comply with Technical Specifications and Selected Licensee Commitments, and to assure that the concentration of radioactive liquid effluents released from the site to the unrestricted area is limited to 10 times the effluent concentrations (ECs) of 10CFR20, Appendix B, Table 2, Column 2, and 2.0E-04 μCi/ml for dissolved and entrained noble gases, the following release rate limit calculation shall be performed for liquid releases to Lake Norman via the RC discharge point:

$f \leq F \div (DF - 1)$ Condition: DF > 1.0 Equation 2.1

where:

f = the undiluted effluent flow, in gpm.

F = the dilution flow available depending on the number (1-8) of RC pumps in service, in gpm.
= (2.50E+05 gpm/pump) × (# of RC pumps in service)

DF = required dilution factor to be applied to the undiluted effluent flow, unitless.

$$DF = \sigma \times \sum_{i} \frac{C_i}{(10 \times EC_i)}$$ Equation 2.2

Note:

If $DF \leq 1.0$ then no dilution is required and the release rate is unrestricted.

If $DF > 1.0$ then dilution flow is required and the allowable release rate is calculated using Equation 2.1. Equation 2.1 is used only when DF > 1.0.

σ = the recirculation factor at equilibrium at the RC discharge location, (dimensionless). The recirculation factor accounts for the fraction of discharged water reused by the station.

$$\sigma = 1 + \frac{Q_{df}}{Q_{cf}} = 1 + \frac{3740}{2976} = 2.26$$

where:

Q_{df} = annual average RC dilution flow (3740 cfs).

Q_{cf} = annual average flow past Cowans Ford Dam (2970 cfs).

C_i = the concentration of radionuclide, 'i', in the undiluted liquid effluent, in μCi/ml.

EC_i = the concentration of radionuclide, 'i', from 10CFR20, Appendix B, Table 2, Column 2, in μCi/ml. Note: if radionuclide, 'i', is a dissolved noble gas, then EC_i = 2.00E-05 μCi/ml.

2.0.1.2 WC AND WWCB DISCHARGE

Liquid releases to the Catawba River through the WC and WWCB discharge pathways normally contain measurable activity above background. The WC/WWCB effluent typically accounts for <1% of the station total liquid activity released. Although designed for continuous discharge, inputs to WC, primarily from the Unit 1 and Unit 2 turbine building sumps, are normally held up in one of two WC Settling Ponds, and then released as a batch. There is a composite sampler at the discharge to the river. An EMF monitors the TBS and Condenser Drain (WU) output (See Figure 2.0-3). It is assumed that no activity is present in the TBS/WU effluent until indicated by radiation monitoring measurements. If an EMF alarms, the TBS/WU pumps are secured. At this time the discharge may be routed to the floor drain tank for processing or routed directly to the condenser cooling water (RC) flow rather than to WC.

Releases going directly to the WWCB are in continuous release. Some activity is planned for release through this pathway during condenser draining; therefore, grab samples are collected and retained for composite generation. Similar to WC, the only radiation monitoring is on the TBS/WU output (see Figure 2.0-3).

WZ (groundwater) Sump C discharges to the Standby Nuclear Service Water Pond (SNSWP). To account for WZ activity discharged into the SNSWP a composite sampler is installed in WZ Sump C (see Figure 2.0-3).

Figure 2.0-1 Liquid Radwaste Discharge Locations

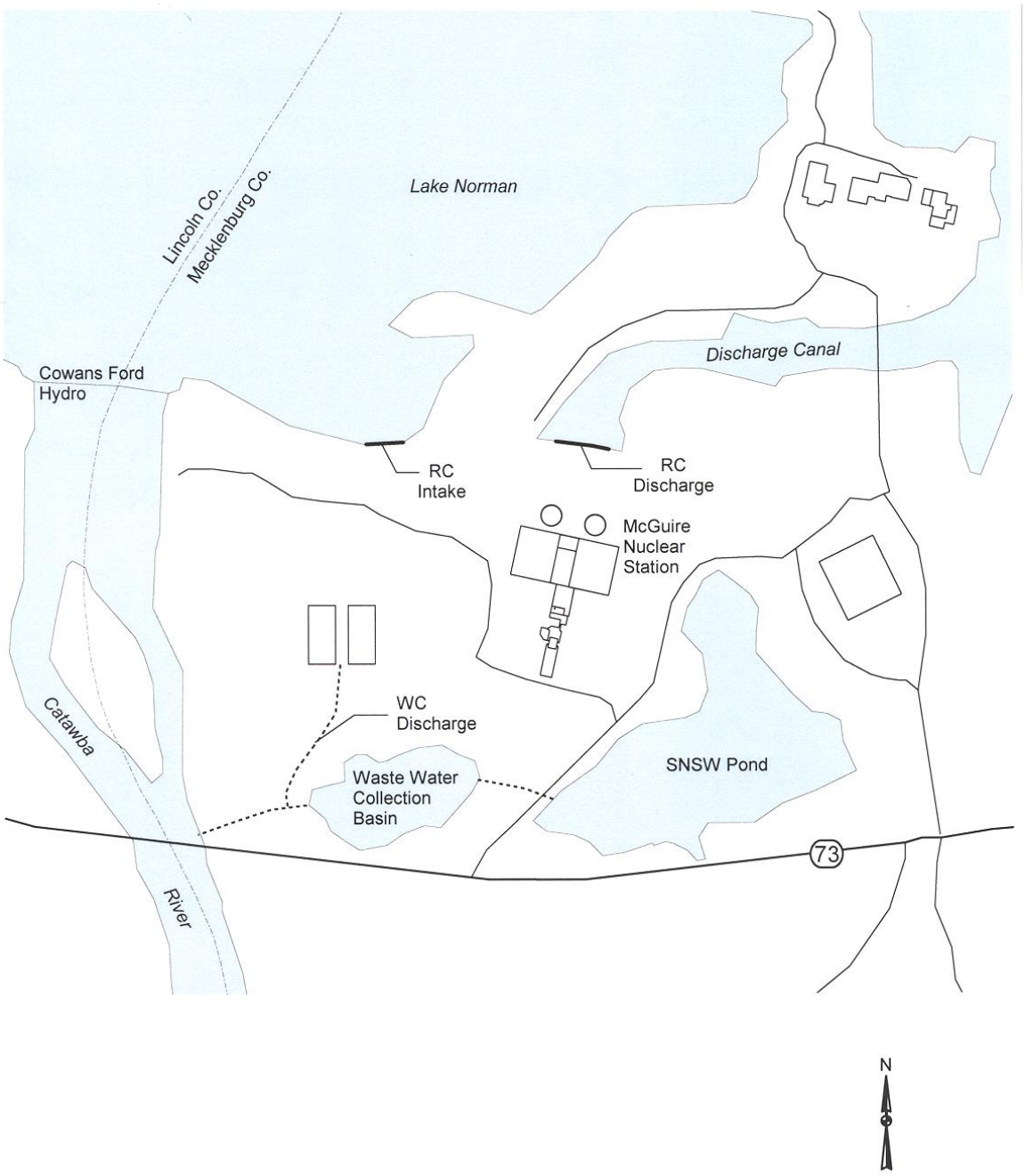

Figure 2.0-2 RC Discharge to Lake Norman

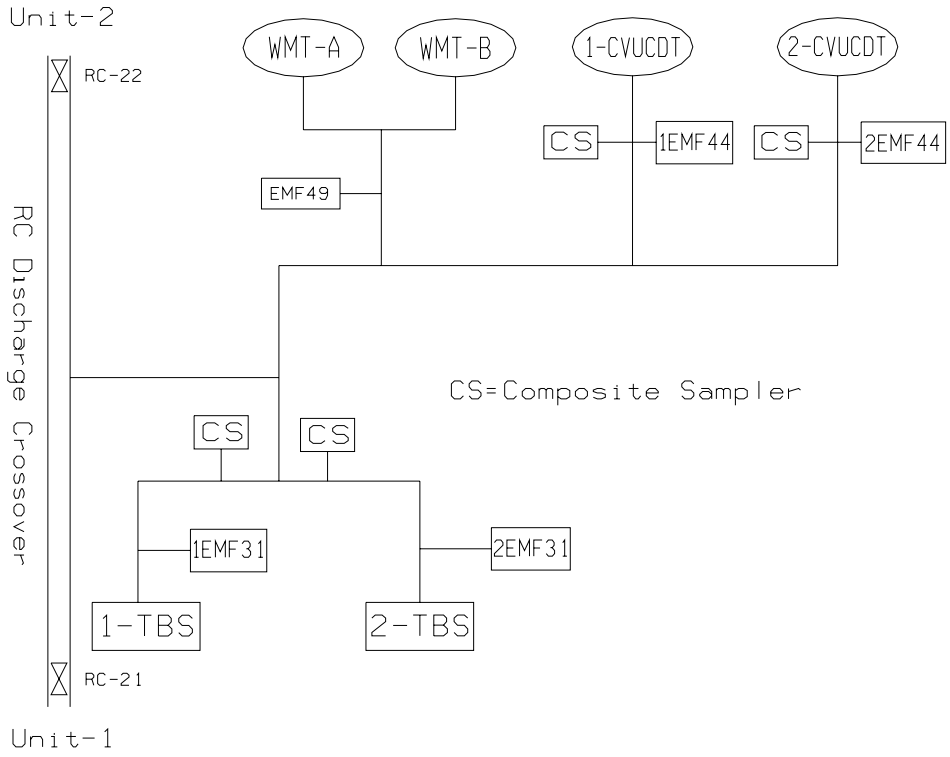

Figure 2.0-3 WC and WWCB Discharge to the Catawba River

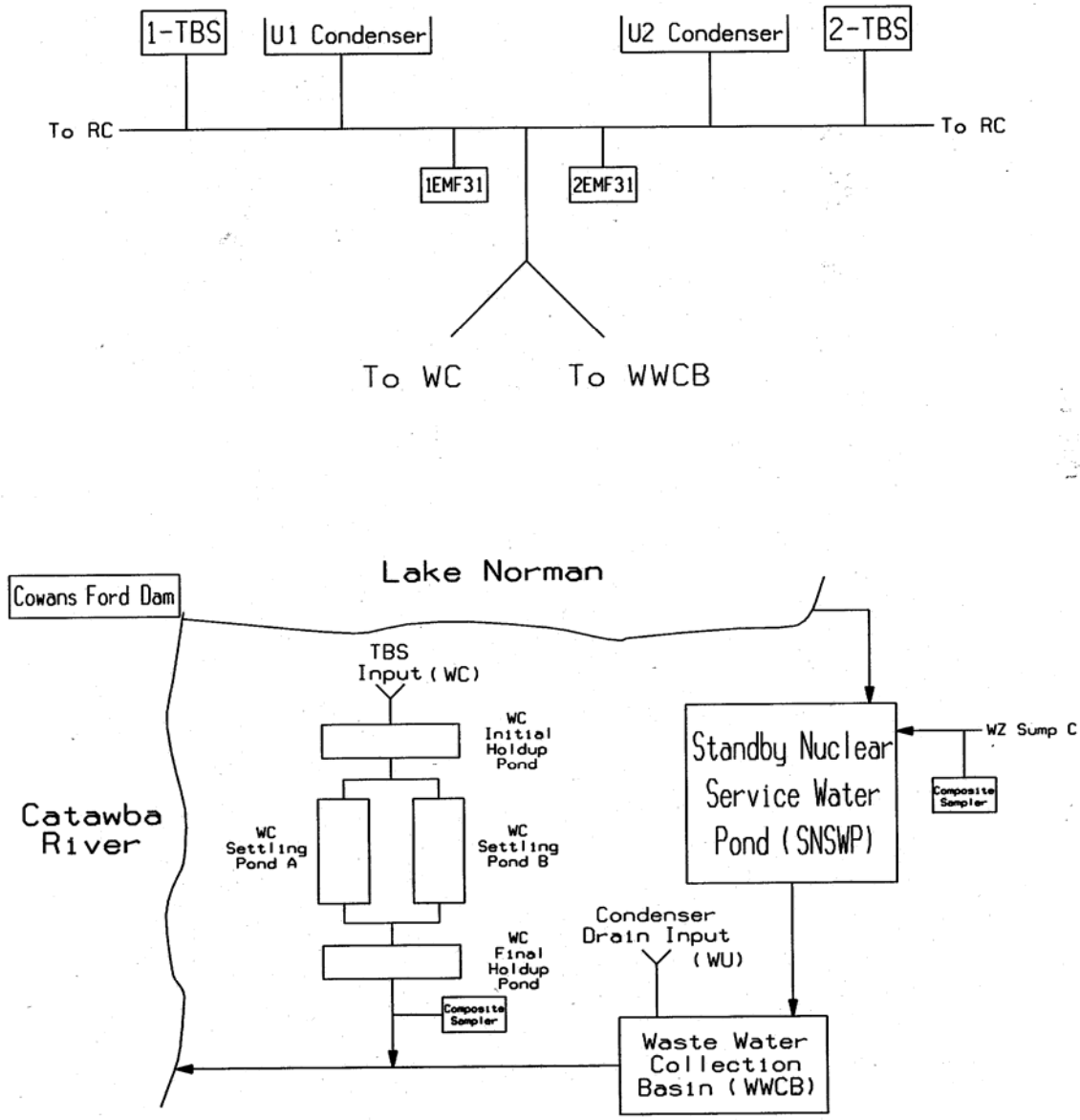

2.0.2 GASEOUS RELEASE RATE LIMIT CALCULATIONS

The two unit vents are the primary gaseous radioactive release points at McGuire. The unit vents are the release points for waste gas decay tanks, containment building purges, auxiliary building ventilation, and the condenser air ejector (see Figure 2.0-4). Each unit vent contains multi-range radiation monitors (EMFs) and flow rate measuring instrumentation.

There are three other separate gaseous effluent release points at McGuire; the Waste Management Facility, Waste Handling Area and Unit 2 Staging Building. These three release points contribute a small percentage of the total site gaseous effluent. Each release point has an EMF, composite sampler, and flow totalizer (see Figure 2.0-5).

2.0.2.1 UNIT VENT DISCHARGE RELEASE RATE LIMIT CALCULATION

In order to comply with Technical Specifications and Selected Licensee Commitments and to assure that the dose rate, at any time, at or beyond the site boundary due to radioactive materials released in gaseous effluents from the site is limited to: ≤ 500 mrem/yr to the total body, and ≤ 3000 mrem/yr to the skin for the noble gases, and is limited to ≤ 1500 mrem/yr to any organ for radioiodine and for radioactive materials in particulate form, and radionuclides other than noble gases with half lives greater than 8 days, the following release rate and radiation monitor setpoint calculations shall be performed for releases from the waste gas decay tanks and the containment building. The release rate calculations when solved for the flow rate,'f', are the release rates for noble gases and for radioiodines, particulates and other radionuclides with half-lives greater than 8 days. The most conservative release rate calculated shall control the flow rate. The following equations are based on the site dose rate limits. For simultaneous releases a multiple release calculation is performed to ensure that the site dose rate limits are not exceeded.

a. Noble Gases

Total Body:

$$\sum_i \left(K_i \times \frac{\chi}{Q} \times Q_i \right) < 500 \text{ mrem/yr} \qquad \text{Equation 2.3}$$

Skin:

$$\sum_i \left(\left(L_i + 1.1 M_i \right) \times \frac{\chi}{Q} \times Q_i \right) < 3000 \text{ mrem/yr} \qquad \text{Equation 2.4}$$

b. Radioiodines, Particulates, and Others

Inhalation, Ingestion and Ground Organ Pathways:

$$\sum_{p} \sum_{i} \left(P_{opi} \times W \times Q_i \times E_i \right) < 1500 \text{ mrem/yr}$$

To include both the food and ground organ dose and the inhalation organ dose the equation can be expanded to:

$$\sum_{p} \sum_{i} \left(\left\{ \left(P_{opi} \right)_{food/gr} \times W_{D/Q} + \left(P_{opi} \right)_{inhal} \times W_{\chi/Q} \right\} \times Q_i \times E_i \right) < 1500 \text{ mrem/yr}$$

Equation 2.5

where:

K_i = the total body dose factor due to gamma emissions for each identified noble gas radionuclide, 'i', in mrem/yr per μCi/m^3 (See Appendix A).

L_i = the skin dose factor due to beta emissions for each identified noble gas radionuclide, 'i', in mrem/yr per μCi/m^3 (See Appendix A).

M_i = the air dose factor due to gamma emissions for each identified noble gas radionuclide, 'i', in mrad/yr per μCi/m^3 (See Appendix A).

P_{opi} = the dose parameter for radionuclides other than noble gases for the inhalation pathway, in mrem/yr per μCi/m^3 and for the food and ground plane pathways in (m^2 × (mrem/yr per μCi/sec)) for organ, 'o', and radionuclide, 'i', (See Appendix B for the pathway specific dose commitment factors). Note: NUREG-1301, page 75, specifies use of the Child age group, Inhalation pathway, for the P_{opi} values.

χ/Q = the highest calculated annual average dispersion parameter for any area at or beyond the site boundary in sec/m^3. For McGuire this value is 7.611E-5 sec/m^3. The location is the NNE sector at 0.5 mile. The boundary for establishing gaseous effluent release limits is the Exclusion Area Boundary (EAB). As shown in McGuire UFSAR Figure 2-5, the EAB is defined as a 2500 foot (~0.5 mile) radius from the station center.

W = the highest calculated annual average dispersion or deposition parameter for estimating the maximum dose rate to an individual from the total inhalation, food, and ground plane pathways:

$W_{\chi/Q}$ = 7.611E-5 sec/m^3, for the inhalation pathway and the airborne H-3 food pathway. The location is the NNE sector at 0.5 mile.

$W_{D/Q}$ = 1.403E-7 m^{-2}, for the food and ground plane pathways. The location is the NNE sector at 0.5 mile.

E_i = the filter removal factor for radionuclide, 'i', e.g., for 99% removal $E_i = 0.01$. For VQ and VP releases $E_i = 0.1$ for iodine, 0.01 for particulates. There is no filtration for WGDT releases.

Q_i = the release rate of radionuclide, 'i', in gaseous effluent from all release points at the site, in µCi/sec.

$$Q_i = k_1 C_i f \div k_2 = 4.72\text{E}+02 \times C_i f \qquad \text{Equation 2.6}$$

where:

C_i = the concentration of radionuclide, 'i', in undiluted gaseous effluent, in µCi/ml.

f = the undiluted effluent flow, in ft^3/min.

k_1 = conversion factor, 2.83E+04 cc/ft^3.

k_2 = conversion factor, 6.0E+01 sec/min.

Substituting the expression for Q_i in Equation 2.6 into Equations 2.3, 2.4, and 2.5, and solving for the flow rate, 'f', in each equation gives:

Noble Gases - Total Body Maximum Release Rate:

$$f_{tb} < \frac{500}{4.72\text{E}+02 \times \chi/Q \times \sum_{\text{i}} \left(K_i \times C_i\right)}$$

Noble Gases - Skin Maximum Release Rate:

$$f_{sk} < \frac{3000}{4.72\text{E}+02 \times \chi/Q \times \sum_{\text{i}} \left[\left(L_i + 1.1 M_i\right) \times C_i\right]}$$

Radioiodines, Particulates, and Others - Organ Maximum Release Rate:

$$f_{or} < \frac{1500}{4.72\text{E}+02 \times \sum_{p} \sum_{i} \left(\left\{\left(P_{opi}\right)_{\text{food/gr}} \times W_{D/Q} + \left(P_{opi}\right)_{\text{inhal}} \times W_{\chi/Q}\right\} \times E_i \times C_i\right)}$$

f_{tb}, f_{sk}, and f_{or}, are calculated for each batch prior to release. The most limiting gaseous release rate is used to assure that no instantaneous dose rate limit is exceeded.

Figure 2.0-4 Unit Vent Release Points

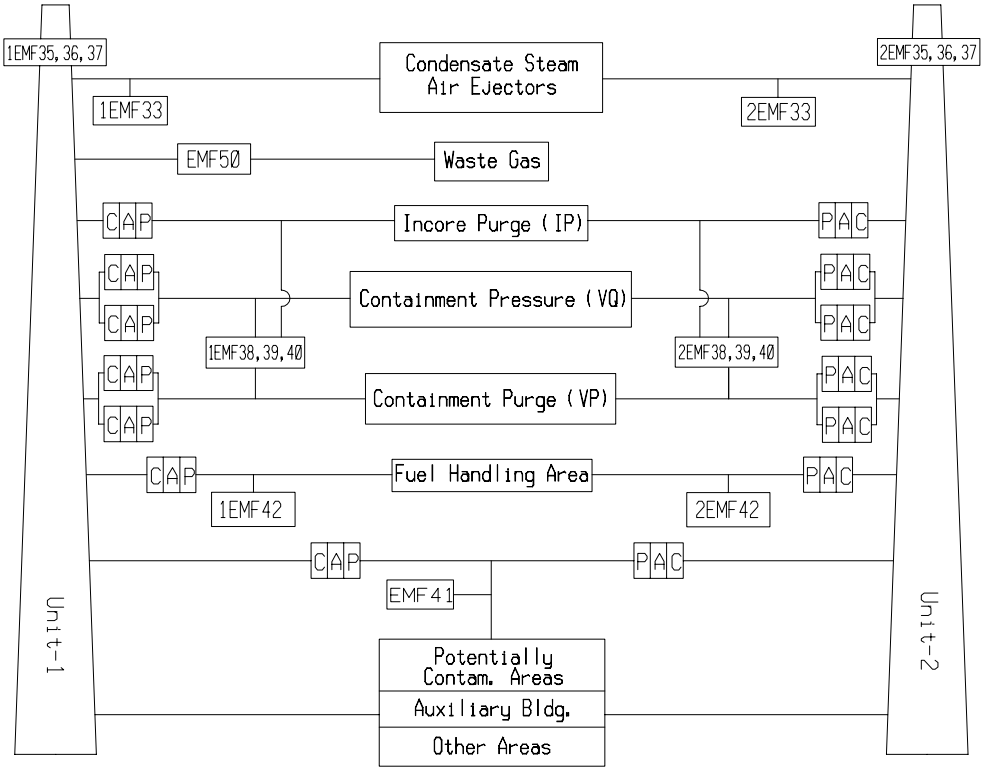

Figure 2.0-5 WMF, WHA, 2-SB Release Points

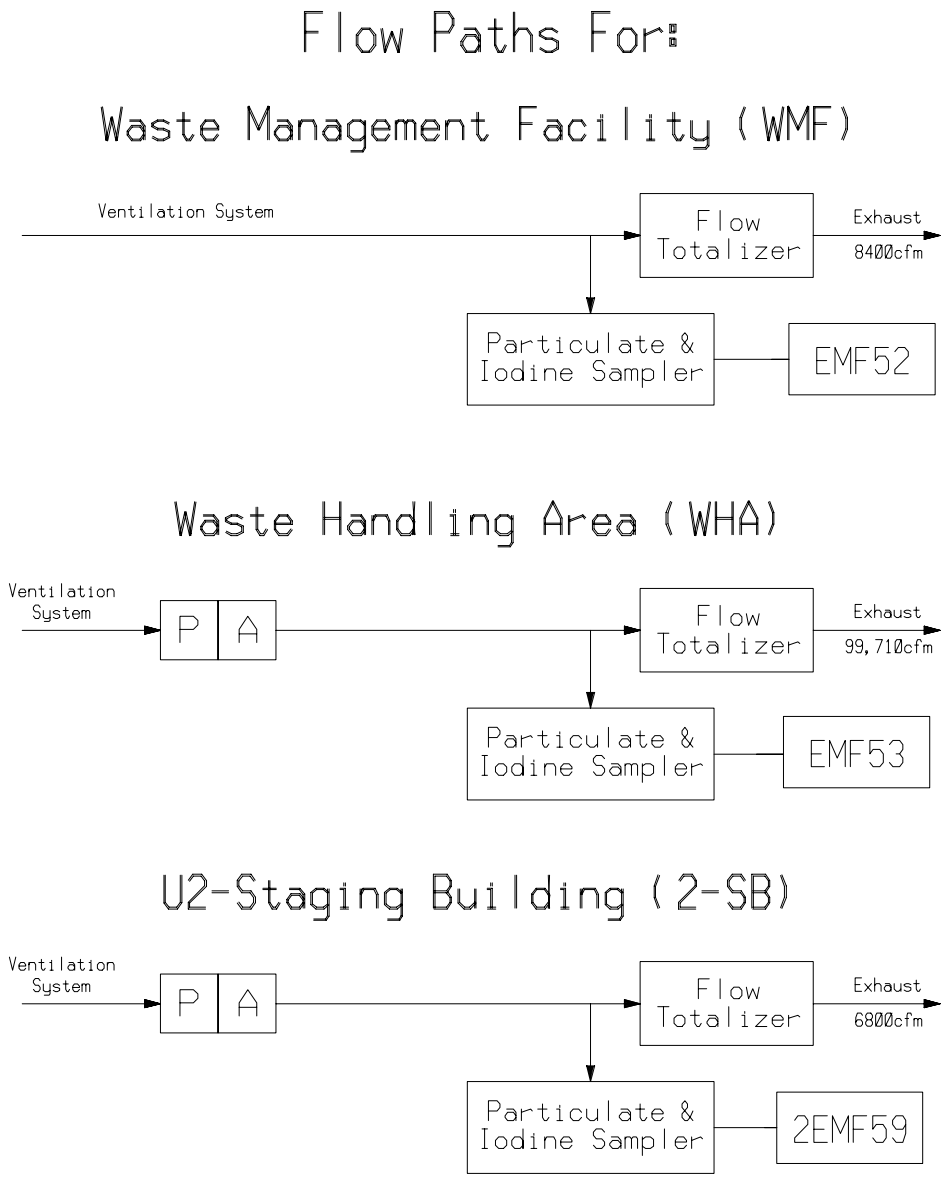

Derivations of Iodine, Particulate, and H-3 Dose Commitment Factors (P_{opi})

Inhalation Pathway - Child Age Group

$$P_{opi} = K'(BR)(DFA_{oi})$$

Formula: from NUREG-0133, page 25.	
Where:	
P_{opi}	Dose commitment factor for Child age group, organ o, nuclide i, for the inhalation pathway (mrem/yr per μCi/m^3). (See Appendix B for the pathway specific dose commitment factors).
K'	Units conversion factor pCi/μCi (10^6).
BR	Breathing rate for the Child age group (m^3/yr, from Regulatory Guide 1.109): Child – 3700
DFA_{oi}	Organ inhalation dose conversion factor for Child age group, organ o, nuclide i, (mrem/pCi), from Table E-9 of Regulatory Guide 1.109.

3.0 SETPOINT CALCULATIONS

3.0.1 LIQUID RADIATION MONITOR SETPOINT CALCULATIONS

Once the liquid release rate parameters have been established radiation monitor setpoints shall be calculated to assure that the concentration of radioactive liquid effluents released from the site to the unrestricted area is limited to ten times the effluent concentrations (ECs) of 10CFR20, Appendix B, Table 2, Column 2, and 2.0E-04 µCi/ml for dissolved and entrained noble gases. By substituting the dilution factor (DF) from Equation 2.2 into Equation 2.1, solving for the undiluted liquid effluent concentration, C_i, and accounting for the monitor background reading, the liquid radiation monitor setpoint can be readily obtained by multiplying C_i by the radiation monitor correlation factor, CF_i, as follows:

$$C_i \leq \frac{(F + f) \times (10 \times EC_i)}{\sigma \times f} \qquad \text{Equation 3.1}$$

$$SP \leq \sum_i (C_i \times CF_i) + bkg \qquad \text{Equation 3.2}$$

where:

C_i = the maximum allowable concentration of radionuclide, 'i', in the undiluted liquid effluent, in µCi/ml.

SP = radiation monitor setpoint, in cpm.

CF_i = radiation monitor correlation factor for radionuclide, 'i', in cpm/µCi/ml. These correlation factors are controlled by station procedures.

bkg = background reading for the radiation monitor, in cpm.

All other parameters were previously defined.

Using conservative or "worst-case" parameters in Equation 3.1 and Equation 3.2 can provide a liquid radiation monitor setpoint that does not need to be revised for every release if activity is low enough to allow for this type of operation such as with continuous releases from the WC release point. However, for batch releases, e.g., waste monitor tanks, through the RC discharge the radiation monitor setpoint is calculated based on actual expected activity in the release. In general, liquid radiation monitors are calibrated to Cs-137, and their setpoints are calculated as follows:

$$C_{Cs-137} = \sum_i \left(C_i \times Eq_i\right)$$

$$Expected\ cpm = \left(C_{Cs-137} \times CF_{Cs-137}\right) + bkg \qquad \text{Equation 3.3}$$

"Trip" setpoints are set based on a multiplier factor above the "expected" cpm calculated in Equation 3.3.

where:

C_{Cs-137} = Cs-137 equivalent concentration, in µCi/ml.

Eq_i = Cs-137 equivalence factor for each isotope, excluding tritium, to that of Cs-137 due to different gamma energies and abundance. This factor includes a 4-hour decay time due to the average time between sample and release. (See Table 3.0-1).

All other parameters were previously defined.

3.0.1.1 WASTE MONITOR TANK SETPOINTS (EMF 49)

As shown on Figure 2.0-2, EMF 49 is the controlling radiation monitor for Waste Monitor Tank (WMT) releases. EMF 49 setpoints are based on actual tank activity, and are calculated as follows:

$$Expected\ cpm = \left(C_{Cs-137} \times CF_{Cs-137}\right) + bkg$$

$$Trip\ 1\ setpoint = \left(C_{Cs-137} \times CF_{Cs-137} \times 1.5\right) + bkg$$

When $Cs-137\ equivalent\ concentration \leq 1.43E-05$ µCi/ml:

$$Trip\ 2\ setpoint = \left(C_{Cs-137} \times CF_{Cs-137} \times 2.0\right) + bkg \quad \textbf{or} \quad 3 \times bkg$$, whichever is higher.

When $Cs-137\ equivalent\ concentration > 1.43E-05$ µCi/ml:

$$Trip\ 2\ setpoint = \left(C_{Cs-137} \times CF_{Cs-137} \times 2.0\right) + bkg$$

where:

C_{Cs-137} = Cs-137 equivalent concentration, in µCi/ml.

CF_{Cs-137} = EMF 49 Cs-137 correlation factor, 3.42E+08 cpm/µCi/ml.

bkg = Background reading from EMF 49 after flushed from previous releases.

If the Cs-137 equivalent concentration is ≤ 1.43E-05 μCi/ml, then 1.43E-05 is used in the Trip 1 and Trip 2 setpoint calculations. This is an indication of a low activity tank, and normal EMF fluctuation may cause Trip 2 alarms and release termination.

3.0.1.2 CONTAINMENT VENTILATION UNIT CONDENSATE DRAIN TANK SETPOINTS (EMF 44)

As shown on Figure 2.0-2, EMF 44 is the controlling radiation monitor for Containment Ventilation Unit Condensate Drain Tank (CVUCDT) releases. EMF 44 setpoints are based on actual tank activity, and are calculated as follows:

$Expected\ \ cpm = C_{Cs-137} \times CF_{Cs-137}$ **or** bkg, whichever is higher.

$Trip\ 1\ setpoint = any\ value\ between\ Expected\ cpm\ and\ Trip\ 2.\ \ Normally\ 2 \times Expected\ cpm$

$Trip\ 2\ setpoint = The\ lesser\ of\ 3 \times Expected\ cpm$ **or** $5.00E+06\ cpm \times \#RC\ pumps$

where:

C_{Cs-137} = Cs-137 equivalent concentration, in μCi/ml.

CF_{Cs-137} = EMF 44 Cs-137 correlation factor, 3.42E+08 cpm/μCi/ml.

bkg = Background reading from EMF 44.

#RC pumps = The least number of available RC pumps that will produce a setpoint greater than Expected cpm.

5.00E+06 = Derived as follows from Equation 3.1:

$$C \leq \frac{(F + f) \times (10 \times EC)}{\sigma \times f}$$

Given the following for each parameter:

C = The gross activity in the undiluted effluent, μCi/ml.

f = Tank flow which varies from 0-60 gpm, assumed to be 60 gpm.

EC = 9.00E-07 μCi/ml, from 10CFR20, the EC for Cs-134 which is the smallest EC value for any detectable radionuclide that is not known to be absent from the mixture.

σ = Recirculation factor, previously defined as 2.26 (see Section 2, Page 2).

F = Dilution flow available: # of RC pumps x 2.50E+05 gpm/pump. Minimum dilution of one pump is used.

Substituting results in C ≤ 1.66E-02 µCi/ml. Next multiply by the EMF 44 correlation factor of 3.42E+08 cpm/µCi/ml: 1.66E-02 x 3.42E+08 = 5.68E+06 cpm. Value is rounded down to 5.00E+06 cpm for added conservatism.

3.0.1.3 TURBINE BUILDING SUMP TO RC SETPOINTS (EMF 31)

As shown on Figure 2.0-2, EMF 31 is the controlling radiation monitor for releases from the Turbine Building Sump (TBS) to the condenser cooling water system (RC). EMF 31 setpoints are based on actual sump activity, and are calculated as follows:

$Expected\ cpm = C_{Cs-137} \times CF_{Cs-137}$ **or** *bkg*, whichever is higher.

Trip 1 setpoint = any value between Expected cpm and Trip 2. Normally 2 × Expected cpm

Trip 2 setpoint = the lesser of 3 × Expected cpm **or** *2.10E + 05 cpm × # RC pumps*

where:

C_{Cs-137} = Cs-137 equivalent concentration, in µCi/ml.

CF_{Cs-137} = EMF 31 Cs-137 correlation factor, 3.02E+08 cpm/µCi/ml.

bkg = Background reading from EMF 31.

#RC pumps = The least number of available RC pumps that will produce a setpoint greater than Expected cpm.

2.10E+05 = Derived as follows from Equation 3.1:

$$C \leq \frac{(F + f) \times (10 \times EC)}{\sigma \times f}$$

Given the following for each parameter:

C = The gross activity in the undiluted effluent, µCi/ml.

f = Sump flow which varies from 0-1340 gpm, assumed to be 1340 gpm.

EC = 9.00E-07 µCi/ml, from 10CFR20, the EC for Cs-134 which is the smallest EC value for any detectable radionuclide that is not known to be absent from the mixture.

σ = Recirculation factor at the RC discharge point, = 2.26.

F = Dilution flow available: # of RC pumps x 2.50E+05 gpm/pump. Minimum dilution of one pump is used.

Substituting the values yields C ≤ 7.47E-04 µCi/ml. Next multiply by the EMF 31 correlation factor of 3.02E+08 cpm/µCi/ml: 7.47E-04 x 3.02E+08 = 2.26E+05 cpm. Value is rounded down to 2.10E+05 cpm for added conservatism.

3.0.1.4 TURBINE BUILDING SUMP TO WC SETPOINTS (EMF 31)

As shown on Figure 2.0-3, EMF 31 is the controlling radiation monitor for releases from the Turbine Building Sump (TBS) to WC. EMF 31 setpoints are based on actual sump activity, and are calculated as follows:

$Expected\ cpm = C_{Cs-137} \times CF_{Cs-137}$ **or** bkg, whichever is higher.

Trip 1 setpoint = any value between Expected cpm and Trip 2. Normally 2 × Expected cpm

Trip 2 setpoint = the lesser of 3 × Expected cpm **or** *8.46E + 03 cpm*

where:

C_{Cs-137} = Cs-137 equivalent concentration, in µCi/ml.

CF_{Cs-137} = EMF 31 Cs-137 correlation factor, 3.02E+08 cpm/µCi/ml.

bkg = Background reading from EMF 31.

8.46E+03 = Derived as follows from Equation 3.1:

$$C \leq \frac{(F \times 0.1 + f) \times (10 \times EC)}{\sigma \times f}$$

Given the following for each parameter:

C = The gross activity in the undiluted effluent, µCi/ml.

f = Sump flow which varies from 0-6700 gpm, assumed to be 6700 gpm.

EC = 9.00E-07 µCi/ml, from 10CFR20, the EC for Cs-134 which is the smallest EC value for any detectable radionuclide that is not known to be absent from the mixture.

σ = Recirculation factor at point where WC enters the Catawba River downstream of Cowans Ford Dam = 1.26.

F = Dilution flow available: Cowans Ford flow may vary from 80 to 50,000 cfs, but is conservatively estimated at 436 cfs (1.96E5 gpm), the historic minimum dilution flow available.

0.1 = Only 10% of Cowans Ford flow is assumed for dilution credit to account for incomplete mixing of the WC effluent downstream of Cowans Ford Dam.

Substituting the values yields C $\leq$ 2.80E-05 μCi/ml. Next multiply by the EMF 31 correlation factor of 3.02E+08 cpm/μCi/ml: 2.80E-05 x 3.02E+08 = 8.46E+03 cpm. Value is rounded down to 8.00E+03 cpm for added conservatism.

Table 3.0-1 Cs-137 Equivalents

Isotope	Equivalence Factor	Isotope	Equivalence Factor	Isotope	Equivalence Factor
Be-7	0.1282	Mo-99	0.3135	La-141	0.0132
F-18	0.5238	Tc-99m	0.5788	La-142	0.2785
Na-24	1.3013	Tc-101	0.00	Ce-141	0.4966
Cl-38	0.0068	Ru-103	1.1798	Ce-143	0.7066
K-40	0.0913	Ru-105	0.8673	Ce-144	0.1321
Cr-51	0.1207	Ru-106	0.4097	I-130	3.1610
Mn-54	1.0871	Ag-108m	3.2676	I-131	1.2074
Mn-56	0.4826	Ag-110m	3.5043	I-132	1.0137
Fe-59	0.9915	Cd-115	0.4739	I-133	1.0971
Co-57	0.8892	Cd-115m	0.0228	I-134	0.1396
Co-58	1.4883	In-115m	0.3048	I-135	0.8432
Co-60	1.8564	Sb-122	0.8691	Ar-41	0.1987
Cu-64	0.3577	Sb-124	2.0195	Kr-85	0.0054
Ni-65	0.1389	Sb-125	1.0467	Kr-85m	0.5240
Zn-65	0.5278	Sb-126	5.0018	Kr-87	0.1020
Zn-69m	0.9788	Sn-113	0.8413	Kr-88	0.4607
Se-75	1.9710	Sn-123	0.0062	Kr-89	0.00
Br-80m	0.0821	Sn-126	0.1747	Xe-131m	0.0211
Br-82	3.3664	Te-125m	0.0023	Xe-133	0.0520
Br-83	0.0054	Te-127	0.0116	Xe-133m	0.1176
Br-84	0.0056	Te-127m	0.0005	Xe-135	0.8334
Br-85	0.00	Te-129	0.0122	Xe-135m	0.00
Rb-86	0.0873	Te-129m	0.0526	Xe-137	0.00
Rb-88	0.00	Te-131	0.0016	Xe-138	0.00
Rb-89	0.00	Te-131m	1.9281	Nd-147	0.3706
Sr-89	0.0002	Te-132	1.0302	Hf-181	1.7053
Sr-91	0.6398	Te-134	0.0402	W-187	0.8499
Sr-92	0.3415	Cs-134	2.5843	Tl-208	0.00
Y-91	0.0028	Cs-136	3.1799	Bi-212	0.0140
Y-91m	0.0403	Cs-137	1.00	Bi-214	0.0003
Y-92	0.1281	Cs-138	0.0110	Pb-212	0.4507
Y-93	0.1009	Ba-133	1.2331	Pb-214	0.0018
Zr-95	1.1163	Ba-139	0.0255	Ra-226	0.0386
Zr-97	1.1163	Ba-140	0.5022	Ac-228	0.8370
Nb-95	1.1114	Ba-141	0.0002	Th-228	0.0090
Nb-95m	0.2929	Ba-142	0.00	Np-239	0.8989
Nb-97	0.1164	La-140	2.0586		

3.0.2 Gaseous Radiation Monitor Setpoint Calculations

In general, gaseous radiation monitors (EMFs) are calibrated to Xe-133, and for continuous release points, e.g., the two unit vents, are preset at a maximum value based on the 500 mrem/year total body gaseous release rate limit according to the following methodology. Note: when applied to the individual release points the 500 mrem/year site dose rate value is apportioned 40% to each unit vent, 7% to the Waste Handling Area, and 6.5% each to the Waste Management Facility and Unit 2 Staging Building.

$$K_{Xe-133} \times \chi/Q \times Q_{Xe-133} < 500 \text{ mrem/yr}$$

Solve for Q_{Xe-133}:

$$Q_{Xe-133} < \frac{500}{K_{Xe-133} \times \chi/Q} \qquad \text{Equation 3.4}$$

From Equation 2.6:

$$Q_{Xe-133} = 4.72\text{E}+02 \times C_{Xe-133} \times f \qquad \text{Equation 3.5}$$

Substitute Equation 3.5 into Equation 3.4:

$$4.72\text{E}+02 \times C_{Xe-133} \times f < \frac{500}{K_{Xe-133} \times \chi/Q}$$

Solve for C_{Xe-133}:

$$C_{Xe-133} < \frac{500}{4.72\text{E}+02 \times f \times K_{Xe-133} \times \chi/Q}$$

$$SP = \left(C_{Xe-133} \times CF\right) + bkg \qquad \text{Equation 3.6}$$

where:

K_{Xe-133} = 2.94E+02, the total body dose factor due to gamma emissions for Xe-133, in mrem/year per μCi/m^3 (See Appendix A).

χ/Q = the highest calculated annual average dispersion parameter for any area at or beyond the site boundary in sec/m^3. For McGuire this value is 7.611E-5 sec/m^3. The location is the NNE sector at 0.5 mile.

Q_{Xe-133} = Xe-133 equivalent release rate limit for the noble gas total body dose pathway, in μCi/sec.

4.72E+02 = Conversion factor, (cc/ft^3)/(sec/min).

$C_{Xe\text{-}133}$ = the maximum allowable Xe-133 equivalent concentration in the gaseous effluent, in µCi/cc.

f = the gaseous effluent flow from the tank, building, or vent, in ft^3/min.

SP = radiation monitor setpoint, in cpm.

CF = the Xe-133 equivalent monitor correlation factor, in cpm/µCi/cc. The correlation factors are controlled by station procedures.

bkg = the radiation monitor background reading, in cpm.

Equation 3.6 provides the methodology to calculate the maximum setpoint for continuous releases. However, most gaseous releases at McGuire are batch releases, e.g., Containment Purge (VP), in which the radiation monitor setpoint is calculated based on actual activity expected in the release. For batch releases with a low activity release rate, e.g., Containment Air Release and Addition (VQ), the expected monitor response is essentially no greater than the existing reading, and the trip setpoints are based on multiples of the existing cpm or a maximum based on flow rate. For batch releases where the effluent can contain activity significantly above background, e.g., Waste Gas Decay Tank (WGDT), the following setpoint methodology is used:

$$C_{Xe-133} = \sum_i \left(C_i \times Eq_i\right)$$

$$Expected\ Cpm = \left(C_{Xe-133} \times CF_{Xe-133}\right) + bkg \qquad \text{Equation 3.7}$$

"Trip" setpoints are set based on a multiplier factor above the "expected" cpm calculated in Equation 3.7.

where:

$C_{Xe\text{-}133}$ = Xe-133 equivalent concentration, in µCi/ml.

Eq_i = Xe-133 equivalence factor for each isotope, excluding tritium, to that of Xe-133 due to different beta energies and abundance. (See Table 3.0-2).

All other parameters were previously defined.

3.0.2.1 CONTAINMENT AIR RELEASE AND ADDITION (VQ) SETPOINTS (EMF 39)

As shown on Figure 2.0-4 and Figure 2.0-5, EMF 39 is the controlling radiation monitor for VQ releases from Containment to the Unit Vent. EMF 39 setpoints for VQ releases are calculated as follows:

$$Expected\ cpm = background = current\ reading$$

$$Trip\ 1\ setpoint = any\ number\ between\ Expected\ cpm\ and\ Trip\ 2, normally\ 2 \times Expected\ cpm$$

$Trip\ 2\ setpoint = 3 \times Expected\ cpm$ **or** 2.9E+04 cpm (setpoint at VP maximum flow rate), whichever is largest, not to exceed 2.2E+06 cpm. 2.2E+06 cpm derived as follows:

From Equation 3.6

$$SP = \left(C_{Xe-133} \times CF\right) + bkg$$

where for a single unit vent release point:

$$C_{Xe-133} < \frac{200}{4.72\text{E}+02 \times f \times K_{Xe-133} \times \chi / Q}$$

Substituting 3.0E+02 cfm for the VQ flow rate (system max), 2.94E+02 mrem/yr/µCi/m^3 for the total body Xe-133 dose factor (See Appendix A), and the values for all the other previously defined parameters:

$$C_{Xe-133} < \frac{200}{4.72\text{E}+02 \times 3.0\text{E}+02 \times 2.94\text{E}+02 \times 7.611\text{E}-05}$$

$$C_{Xe-133} < 6.3\text{E}-02 \quad \mu\text{Ci/ml}$$

Substituting 3.54E+07 cpm/µCi/ml for the EMF 39 monitor correlation factor and given that background is negligible compared to the maximum Trip 2 setpoint yields:

$$SP = 6.3\text{E}-02 \times 3.54\text{E}+07 \cong 2.2\text{E}+06 \text{ cpm}$$

3.0.2.2 CONTAINMENT PURGE (VP) AND INCORE PURGE (IP) SETPOINTS (EMF 39, EMF 36)

As shown on Figure 2.0-4 and Figure 2.0-5, EMF 39 is the controlling radiation monitor for VP and IP releases from Containment to the Unit Vent.

For VP and IP low activity releases (i.e. Expected cpm ≤ 1.0E+04 cpm) only EMF 39 setpoints are calculated. EMF 39 setpoints for VP and IP low activity releases are calculated as follows:

$$Expected\ cpm = background = current\ reading$$

Trip 1 setpoint = any number between Expected cpm and Trip 2, normally 2 × Expected cpm

Trip 2 setpoint = 2.9E+04 cpm, derived as follows:

From Equation 3.6

$$SP = \left(C_{Xe-133} \times CF\right) + bkg$$

where for a single unit vent release point:

$$C_{Xe-133} < \frac{200}{4.72\text{E}+02 \times f \times K_{Xe-133} \times \chi / Q}$$

Substituting 2.31E+04 cfm for the VP flow rate, 2.94E+02 mrem/yr/μCi/m^3 for the total body Xe-133 dose factor (See Appendix A), and the values for all the other previously defined parameters:

$$C_{Xe-133} < \frac{200}{4.72\text{E}+02 \times 2.31\text{E}+04 \times 2.94\text{E}+02 \times 7.611\text{E}-05}$$

$$C_{Xe-133} < 8.20\text{E}-04 \quad \mu\text{Ci/ml}$$

Substituting 3.54E+07 cpm/μCi/ml for the EMF 39 monitor correlation factor and given that background is negligible compared to the maximum Trip 2 setpoint yields:

$$SP = 8.20\text{E}-04 \times 3.54\text{E}+07 \cong 2.9\text{E}+04 \text{ cpm}$$

Note: The flow rate used for VP is 2.31E+04 cfm, but the same setpoint would be used for IP. The IP flow rate is 800 cfm, therefore the 2.9E+04 cpm setpoint is conservative for IP.

For VP and IP high activity releases (i.e. Expected cpm > 1.0E+04 cpm) it may be necessary to give the "affected" unit (the unit making the VP or IP release) a greater allowable release rate than the 200 mrem/yr default value. For the VP and IP high activity cases, in addition to EMF 39 setpoints, the EMF 36 Trip 2 setpoint is calculated as follows:

$$EMF\ 36\ Expected\ CPM = \frac{VP \times EMF\ 39\ cpm \times 0.75}{\left(VP^* + UV\right)}$$

where:

EMF 39 cpm = EMF 39 present or expected reading.

0.75 = approximate value of EMF 36 correlation factor (2.60E+07)/EMF 39 correlation factor (3.54E+07).

UV = Unit Vent flow rate (cfm).

VP = VP calculated flow rate (cfm):

$$VP \text{ Flow Rate} = \frac{2.31\text{E}+04 \text{ cfm} \times 1.45\text{E}+04 \text{ cpm} \times \text{M}}{\text{Desired EMF 39 Trip 2 minus bkg (normally } 2.90\text{E}+04 \text{ cpm)}}$$

where:

2.31E+04 cfm = Full VP flow rate.

1.45E+04 cpm = cpm related to 100 mrem at full VP flow rate.

M = Multiplication factor for dose assignment to the affected unit vent. M can be ≥ 2 (= 200 mrem/yr), but, if > 2, both unit vents together must be ≤ 4 (=400 mrem/yr). Note that increasing the Multiplication Factor is in effect giving the "affected" unit more of the station release rate limit, and decreasing the release rate limit for the "unaffected" unit.

*VP** indicates that VP flow is not used in the denominator if VP is already running.

$$\text{AFFECTED EMF 36 Trip 2} = \frac{\text{M}}{2} \times 4.10\text{E}+03 \text{ cpm}$$

where:

4.10E+03 cpm = Normal EMF 36 Trip 2 setpoint (derived below)

$$\text{UNAFFECTED EMF 36 Trip 2} = 8.20\text{E}+03 \text{ cpm} - \text{AFFECTED EMF 36 Trip 2}$$

where:

8.20E+03 cpm = Total cpm allowed for both unit vents (2 x 4.10E+03).

4.10E+03 cpm is derived as follows:

From Equation 3.6

$$SP = \left(C_{Xe-133} \times CF\right) + bkg$$

where for a single unit vent release point:

$$C_{Xe-133} < \frac{200}{4.72E+02 \times f \times K_{Xe-133} \times \chi / Q}$$

Substituting 1.20E+05 cfm for the UV flow rate, 2.94E+02 mrem/yr/μCi/m^3 for the total body Xe-133 dose factor (See Appendix A), and the values for all the other previously defined parameters:

$$C_{Xe-133} < \frac{200}{4.72E+02 \times 1.20E+05 \times 2.94E+02 \times 7.611E-05}$$

$$C_{Xe-133} < 1.58E-04 \quad \mu Ci/ml$$

Substituting 2.60E+07 cpm/μCi/ml for the EMF 36 monitor correlation factor and given that background is negligible compared to the maximum Trip 2 setpoint yields:

$$SP = 1.58E-04 \times 2.60E+07 = 4.10E+03 \text{ cpm}$$

3.0.2.3 WASTE GAS DECAY TANK (WGDT) SETPOINTS (EMF50, EMF36)

As shown on Figure 2.0-4 and Figure 2.0-5, EMF 50 (when operable) and EMF 36 (when EMF 50 is not operable) are the controlling radiation monitors for WGDT releases to the Unit Vent.

EMF 50 setpoints are based on actual tank activity, and are calculated as follows:

$$\text{Expected cpm} = (C_{Xe-133} \times CF_{Xe-133}) + \text{bkg}$$

$$\text{Trip 1 setpoint} = (C_{Xe-133} \times CF_{Xe-133} \times 1.5) + \text{bkg}$$

$$\text{Trip 2 setpoint} = (C_{Xe-133} \times CF_{Xe-133} \times 3.0) + \text{bkg}$$

where:

C_{Xe-133} = Xe-133 equivalent concentration, in μCi/ml.

CF_{Xe-133} = EMF 50 Xe-133 correlation factor, 5.78E+06 cpm/μCi/ml.

bkg = Background reading from EMF 50.

If the Xe-133 equivalent concentration is ≤ 2.82E-05 μCi/ml, then 2.82E-05 is used in the Trip 1 and Trip 2 setpoint calculations. This is an indication of a low activity tank, and normal EMF fluctuation may cause Trip 2 alarms and release termination.

The unit vent gas radiation monitor, EMF 36, is used as the controlling monitor for WGDT releases if EMF 50 is inoperable. In the rare occurrence that EMF 36 must be used as the controlling monitor for WGDT releases only the "expected" cpm is calculated, and the EMF counts are monitored manually during the WGDT release. The EMF 36 expected counts from WGDT activity is calculated as follows:

$$Expected\ cpm = \frac{40\ cfm \times C_{Xe-133} \times CF_{Xe-133}}{F_{UV}} + bkg$$

where:

C_{Xe-133} = Xe-133 equivalent concentration, in µCi/ml.

CF_{Xe-133} = EMF 36 Xe-133 correlation factor, 2.60E+07 cpm/µCi/ml.

bkg = Background reading from EMF 36.

$40\ cfm$ = Maximum Waste Gas flow rate.

F_{UV} = Current Unit Vent (U1) flow rate.

Table 3.0-2

Xe-133 Equivalents

Isotope	EMF 36/39 Equivalence Factors	EMF 50 Equivalence Factors
Kr-83m	0	0
Kr-85m	2.48	5.36
Kr-85	2.56	5.02
Kr-87	2.93	6.23
Kr-88	2.78	5.54
Kr-89	2.93	6.23
Kr-90	2.93	6.23
Xe-131m	1.69	2.60
Xe-133m	1.99	3.46
Xe-133	1.00	1.00
Xe-135m	0.83	1.21
Xe-135	2.63	5.36
Xe-137	2.93	6.23
Xe-138	2.93	6.23
Ar-41	2.82	5.70
C-11	2.70	5.54

4.0 EFFLUENT DOSE MODELS

The effluent dose models used to show compliance with 10CFR50, Appendix I ALARA design objectives, 40CFR190 fuel cycle dose limits, and the dose values given in station SLCs are based on the methodology given in NUREG-0133 and Regulatory Guide 1.109. Dose contributions to the maximum individual shall be calculated at least every 31 days, quarterly, and annually using the RETDAS computer code which implements the ODCM methodology. RETDAS, Radioactive Effluent Tracking and Dose Assessment Software, is a database application designed by Canberra Industries, Inc. to automate many of the tasks required in the administration of effluent releases at McGuire. RETDAS performs normal operation effluent dose assessment using NUREG-0133 and Regulatory Guide 1.109 methodology.

Station long-term historical and dose projection calculations are performed periodically to determine the station's status with respect to meeting annual ALARA goals specified in the McGuire SLCs. Such calculations are used to verify that adequate margin remains during a report period to allow normal station and radwaste system operation, including anticipated operational occurrences, for the remainder of the report period without exceeding applicable goals. Station 31-day dose projections that are used to assess the need to reduce effluent releases with the Gaseous Waste (WG) or Liquid Waste (WL) systems as required in the McGuire SLCs are estimated by the previous month's calculated dose results.

Fuel cycle dose calculations shall be performed annually or as required by special reports. Dose contributions shall be calculated using the RETDAS computer program.

4.0.1 LIQUID EFFLUENT DOSE MODEL FOR THE MAXIMUM EXPOSED INDIVIDUAL

Of the possible exposure pathways in the aquatic environment, only three contribute significantly to the total dose; these pathways are ingestion of potable water and aquatic foods, and direct exposure from radioactivity deposited on the shoreline. The dose contribution from these pathways for measured quantities of radioactive materials identified in liquid effluents released to unrestricted areas shall be calculated for the maximum exposed individual in each age group using the methodology provided in this section.

There are two liquid discharge points to the environment at McGuire; (1) the Condenser Cooling Water System (RC) discharge point to Lake Norman, and (2) the Conventional Waste Water System (WC) and Waste Water Collection Basin (WWCB) discharge point to the Catawba River downstream of Cowan's Ford Dam (See Figure 2.0-1). Liquid dose calculations for the maximum exposed individual are performed and documented in the Annual Effluent Release Report for both locations using the applicable activity release

and dilution data for each liquid effluent release point. The primary liquid effluent discharge point for McGuire is through RC to Lake Norman. In general, only low activity tritium releases (<1% station total) occur through the WC and WWCB discharge point to the Catawba River. Dose calculations are performed for each of the two liquid discharge points for dose reporting purposes. The highest calculated dose from the two dose calculations is used to define the maximum individual dose from liquid releases at McGuire.

Liquid Dose Calculations

The following equation is used for calculating liquid dose to the maximum exposed individual at each of the two liquid effluent release points:

$$Dose_{oa} = \sum_{p} \sum_{i} \left(A_{oapi} \times C_i \right) \times \Delta t \times F_n$$

$$F_n = \frac{f}{f + F} \times \sigma$$

Formula: adapted from NUREG-0133, pages 15-17.	
Where:	
$Dose_{oa}$	The cumulative dose commitment for organ o and age group a, from the liquid effluent for the total time period, Δt. (mrem)
A_{oapi}	Dose commitment factor for organ o, age group a, pathway p, and nuclide i (mrem/hr per μCi/ml). (See Appendices C through F for age group and pathway specific dose commitment factors).
C_i	The average concentration of nuclide i, in undiluted liquid effluent during the time period, Δt. (μCi/ml)
Δt	The length of time over which C_i and F_n are averaged for all liquid releases. (hr)
F_n	The near field average dilution factor for C_i during the period of interest, Δt. Includes the recirculation factor. (dimensionless)
f	Average liquid radwaste flow during the period of interest, Δt. (gpm)
F	Average dilution flow during the period of interest, Δt. (gpm)
	RC primary discharge location: RC average dilution flow
	WC discharge location: 10% of Cowans Ford Dam average dilution flow
σ	Recirculation factor*. (dimensionless)
	Lake Norman (RC) = 2.26 for fish, shoreline; = 1.26 for potable water
	Catawba River (WC and WWCB) = 1.26 for fish, potable water, shoreline

* The recirculation factor accounts for the fraction of discharged water reused by the station. The numbers listed are historic annual average values. These values can be modified to account for deviations from average in a particular year for use in calculating maximum individual dose. A recirculation factor of 4.0 is currently being used for all pathways in the liquid dose calculation model for added conservatism.

Derivation of Liquid Dose Commitment Factors (A_{oapi})

Potable Water

$$A_{oapi} = 1.14 \times 10^5 \times \frac{U_{aw}}{D_w} \times D_{aoi} \times e^{-\lambda_i t_p}$$

Formula: from NUREG-0133, page 16, and Regulatory Guide 1.109, pg. 1.109-12. Where:	
A_{oapi}	Dose commitment factor for organ o, age group a, pathway p, and nuclide i, (mrem/hr per μCi/ml). (See Appendices C through F for age group and pathway specific dose commitment factors).
1.14×10^5	Units conversion factor (pCi-yr-ml)/(μCi-hr-kg).
U_{aw}	Water consumption rate in liters per year for age group a. From Table E-5, Regulatory Guide 1.109. Adult – 730 Teen – 510 Child – 510 Infant – 330
D_w	Dilution factor from the near field area to the potable water intake; =1.0 for McGuire.
D_{aoi}	Dose factor for age group a, organ o, nuclide i, in mrem/pCi. From tables E-11 through E-14 of Regulatory Guide 1.109.
λ_i	Decay constant for nuclide i, in sec^{-1}.
t_p	Environmental transit time from release to receptor. Default = 4.32E+04 sec (12 hours). From Regulatory Guide 1.109, Table E-15.

Aquatic Foods

$$A_{oapi} = 1.14 \times 10^5 \times U_{af} \times BF_i \times D_{aoi} \times e^{-\lambda_i t_p}$$

Formula: from NUREG-0133, page 16, and Regulatory Guide 1.109, pg. 1.109-12. Where:	
A_{oapi}	Dose commitment factor for organ o, age group a, pathway p, and nuclide i, (mrem/hr per μCi/ml). (See Appendices C through F for age group and pathway specific dose commitment factors).
1.14×10^5	Units conversion factor (pCi-yr-ml)/(μCi-hr-kg).
U_{af}	Fish consumption rate for age group a (kg/yr). From Table E-5, Regulatory Guide 1.109. Adult – 21 Teen – 16 Child – 6.9 Infant – 0
BF_i	Bioaccumulation factor for nuclide i, in fish, in units of (pCi/kg per pCi/liter). From Table A-1 of Regulatory Guide 1.109.
D_{aoi}	Dose factor for age group a, organ o, nuclide i, in mrem/pCi. From tables E-11 through E-14 of Regulatory Guide 1.109.
λ_i	Decay constant for nuclide i, in sec^{-1}.
t_p	Environmental transit time from release to receptor. Default = 8.64E+04 sec (1 day). From Regulatory Guide 1.109, Table E-15.

Shoreline Sediment

$$A_{oapi} = 1.14 \times 10^5 \times 100 \times DFG_{oi} \times w \times U_{as} \times T_i^{\frac{1}{2}} \times e^{-\lambda_i t_p} \times (1 - e^{-\lambda_i t_b})$$

Formula: adapted from Regulatory Guide 1.109, page 1.109-14.	
Where:	
A_{oapi}	Dose commitment factor for organ o, age group a, pathway p, and nuclide i, (mrem/hr per μCi/ml). (See Appendices C through F for age group and pathway specific dose commitment factors).
1.14×10^5	Units conversion factor (pCi-yr-ml)/(μCi-hr-kg).
100	Proportionality constant used in the sediment radioactivity model, (liters/(m^2-day).
DFG_{oi}	Ground plane dose conversion factor for organ o, nuclide i (mrem/hr per pCi/m^2), from Table E-6 of Regulatory Guide 1.109.
w	Shoreline width factor. For McGuire = 0.3, from Table A-2, Regulatory Guide 1.109.
U_{as}	Shoreline exposure rate for age group a (hr/yr), From Table E-5, Regulatory Guide 1.109. Adult – 12 Teen – 67 Child – 14 Infant – 0
$T_i^{½}$	Nuclide half life for nuclide i, in days.
λ_i	Nuclide decay constant for nuclide i.
t_p	Average transit time to point of exposure (0 hours).
t_b	Sediment exposure time (15 years). Page 1.109-14.

4.0.2 GASEOUS EFFLUENT DOSE MODEL FOR THE MAXIMUM EXPOSED INDIVIDUAL

The dose contributions from measured quantities of radioactive materials identified in gaseous effluent released to unrestricted areas shall be calculated for the maximum gamma and beta air dose from noble gases, and for the maximum exposed individual from radioiodines, particulates, and others using the following equations:

Gaseous Dose Calculations

Noble Gas Dose Calculations

Gamma Air Dose

$$Dose_{\gamma} = 3.17 \times 10^{-8} \times \chi / Q \times \sum_{i} \left(M_i \times Q_i \right)$$

Formula: adapted from NUREG-0133, page 28.	
Where:	
$Dose_{\gamma}$	Gamma air dose for the time period of interest (mrad).
3.17×10^{-8}	Inverse number of seconds in year (year/seconds).
M_i	Gamma air dose factor due to gamma emissions for nuclide i (mrad/yr per μCi/m^3). (See Appendix A).
χ/Q	The highest calculated annual average relative concentration for any area at or beyond the site boundary (sec/m^3). (See Table 6.0-8).
Q_i	Activity for nuclide i released during the time period of interest (μCi).

Beta Air Dose

$$Dose_{\beta} = 3.17 \times 10^{-8} \times \chi / Q \times \sum_{i} \left(N_i \times Q_i \right)$$

Formula: adapted from NUREG-0133, page 28.	
Where:	
$Dose_{\beta}$	Beta air dose for the time period of interest (mrad).
3.17×10^{-8}	Inverse number of seconds in year (year/seconds).
N_i	Beta air dose factor due to beta emissions for nuclide i (mrad/yr per μCi/m^3). (See Appendix A).
χ/Q	The highest calculated annual average relative concentration for any area at or beyond the site boundary (sec/m^3). (See Table 6.0-8).
Q_i	Activity for nuclide i released during the time period of interest (μCi).

Iodine, Particulates, and H-3 Dose Organ Dose Calculation

$$Dose_{oa} = 3.17 \times 10^{-8} \times W \times \sum_{p} \sum_{i} \left(R_{oapi} \times Q_i \right)$$

Formula: adapted from NUREG-0133, pages 29 & 30.		
Where:		
$Dose_{oa}$	The cumulative dose commitment to the total body or any organ o, for an individual of age group a (mrem).	
3.17×10^{-8}	Inverse number of seconds in year (year/seconds).	
R_{oapi}	Dose commitment factor for organ o, age group a, pathway p, and nuclide i. The units are based on whether a dispersion or deposition factor is used. When a χ/Q is used the units are mrem/yr per $\mu Ci/m^3$. When a D/Q is used the units are ($m^2 \cdot$ mrem/yr) per µCi/sec. (See Appendices G through J for age group and pathway specific dose commitment factors).	
W	Dispersion (χ/Q) or deposition factor (D/Q). The factor used is based upon the pathway. Note: χ/Q is always used for tritium.	
	Pathway	Factor Used
	Ground Plane Deposition	D/Q (m^{-2})
	Inhalation	χ/Q (sec/m^3)
	Vegetation	D/Q (m^{-2})
	Grass/Cow/Milk	D/Q (m^{-2})
	Grass/Goat/Milk	D/Q (m^{-2})
	Grass/Cow/Meat	D/Q (m^{-2})
Q_i	Activity for nuclide i, released during the time period of interest (µCi).	

Maximum individual organ dose is determined by calculating the organ dose at each of the χ/Q and D/Q locations shown in Table 6.0-8 and Table 6.0-9 (144 locations), and then choosing the maximum dose. Dose is calculated only for pathways (e.g., garden, milk animal, etc.) that actually exist at each location as determined by the land use census shown in Table 6.0-3. The boundary for establishing gaseous effluent release limits is the Exclusion Area Boundary (EAB). As shown in McGuire UFSAR Figure 2-5, the EAB is defined as a 2500 foot (~0.5 mile) radius from the station center.

Derivations of Iodine, Particulate, and H-3 Dose Commitment Factors (R_{oapi})

Ground Plane Deposition Pathway

$$R_{oapi} = K'K''(SF)DFG_{oi}\left[\frac{(1-e^{-\lambda_i t})}{\lambda_i}\right]$$

Formula: from NUREG-0133, page 32.	
Where:	
R_{oapi}	Dose commitment factor for organ o, age group a, nuclide i, for ground plane deposition pathway (m^2·mrem/yr per μCi/sec). (See Appendices G through J for age group and pathway specific dose commitment factors).
K'	Units conversion factor pCi/μCi (10^6).
K"	Units conversion factor 8760 hr/year.
SF	Shielding factor (dimensionless) (0.7, from Regulatory Guide 1.109).
DFG_{oi}	Ground plane dose conversion factor for organ o, nuclide i (mrem/hr per pCi/m^2), from Table E-6 of Regulatory Guide 1.109.
λ_i	Nuclide decay constant for nuclide i (sec^{-1}).
t	Exposure time, 4.73×10^8 seconds (15 years).

Inhalation Pathway

$$R_{oapi} = K'(BR_a)(DFA_{oi})_a$$

Formula: from NUREG-0133, page 31.	
Where:	
R_{oapi}	Dose commitment factor for organ o, age group a, nuclide i, for inhalation pathway (mrem/yr per μCi/m^3). (See Appendices G through J for age group and pathway specific dose commitment factors).
K'	Units conversion factor pCi/μCi (10^6).
BR_a	Breathing rate for age group (m^3/yr), from Regulatory Guide 1.109: Adult – 8000 Teen – 8000 Child – 3700 Infant – 1400
$(DFA_{oi})_a$	Organ inhalation factor dose conversion factor for organ o, nuclide i, age group a (mrem/pCi), from Tables E-7 through E-10 of Regulatory Guide 1.109.

Vegetation

$$R_{oapi} = K'\left[\frac{(r)}{Y_v(\lambda_i + \lambda_w)}\right] \times (DFL_{oi})_a \times \left[U_a^L f_L e^{-\lambda_i t_L} + U_a^S f_g e^{-\lambda_i t_h}\right]$$

Formula: from NUREG-0133, page 35. Where:	
R_{oapi}	Dose commitment factor for organ o, age group a, nuclide i, for vegetation pathway (m^2·mrem/yr per µCi/sec). (See Appendices G through J for age group and pathway specific dose commitment factors).
K'	Units conversion factor pCi/µCi (10^6).
r	Fraction of deposited activity retained on vegetation, from Regulatory Guide 1.109. 1.0 for radioiodine. 0.2 for particulates.
Y_v	Vegetation areal density (kg/m^2) (2.0, from Regulatory Guide 1.109).
λ_i	Nuclide decay constant for nuclide i (sec^{-1}).
λ_w	Decay constant for removal of activity on leaf and plant surfaces by weathering (5.73×10^{-7} sec^{-1}, from NUREG-0133).
$(DFL_{oi})_a$	Ingestion dose conversion factor for nuclide i, organ o, and age group a, from Tables E-11 through E-14 of Reg. Guide 1.109 (mrem/pCi).
U^L_a	Consumption rate of fresh vegetation for age group a (kg/yr) (from Regulatory Guide 1.109). Adult – 64 Teen – 42 Child – 26 Infant – 0
f_L	Fraction of annual intake of fresh leafy vegetation grown locally (1.0, from NUREG-0133).
t_L	Average time between harvest of leafy vegetation and consumption (8.6×10^4 seconds, (1 day), from Regulatory Guide 1.109).
U^S_a	Consumption rate of stored vegetation for age group a (kg/yr) (from Regulatory Guide 1.109). Adult – 520 Teen – 630 Child – 520 Infant – 0
f_g	Fraction of annual intake of stored vegetation (0.76, from Regulatory Guide 1.109).
t_h	Average time between harvest of stored vegetation and consumption (5.18×10^6 seconds, (60 days), from Regulatory Guide 1.109).

Vegetation – Tritium

$$R_{oapi} = K' K'' \left[U_a^L f_L + U_a^S f_g \right] (DFL_{oi})_a \left[0.75 (0.5 / H) \right]$$

Formula: from NUREG-0133, page 36.	
Where:	
R_{oapi}	Dose commitment factor for organ o, age group a, for vegetation pathway and tritium (mrem/yr per μCi/m^3). (See Appendices G through J for age group and pathway specific dose commitment factors).
K'	Units conversion factor pCi/μCi (10^6).
K'''	Units conversion factor gm/kg (10^3).
U^L_a	Consumption rate of fresh vegetation for age group a (kg/yr) (from Regulatory Guide 1.109). Adult – 64 Teen – 42 Child – 26 Infant – 0
f_L	Fraction of annual intake of fresh leafy vegetation grown locally (1.0, from NUREG-0133).
U^S_a	Consumption rate of stored vegetation for age group a (kg/yr) (from Regulatory Guide 1.109). Adult – 520 Teen – 630 Child – 520 Infant – 0
f_g	Fraction of annual intake of stored vegetation (0.76, from Regulatory Guide 1.109).
$(DFL_{oi})_a$	Ingestion dose conversion factor for nuclide i, organ o, and age group a, from Tables E-11 through E-14 of Regulatory Guide 1.109 (mrem/pCi).
0.75	Fraction of total feed that is water. (From NUREG-0133).
0.5	Ratio of specific activity of feed grass water to atmospheric water. (From NUREG-0133).
H	Absolute humidity of the atmosphere (8 gm/m^3, from Regulatory Guide 1.109).

Grass/Cow/Milk

$$R_{oapi} = K' \frac{Q_F(U_{ap})}{\lambda_i + \lambda_w} F_{mi}(r)(DFL_{oi})_a \left[\frac{f_p f_s}{Y_p} + \frac{(1 - f_p f_s)e^{-\lambda_i t_h}}{Y_s} \right] e^{-\lambda_i t_f}$$

Formula: from NUREG-0133, pages 32 & 33. Where:	
R_{oapi}	Dose commitment factor for organ o, age group a, nuclide i, for grass/cow/milk pathway (m^2·mrem/yr per µCi/sec). (See Appendices G through J for age group and pathway specific dose commitment factors).
K'	Units conversion factor pCi/µCi (10^6).
Q_F	Cow consumption rate (50 kg/day, from Regulatory Guide 1.109)
U_{ap}	Consumption rate of cow milk for age group a (liters/yr, from Regulatory Guide 1.109). Adult – 310 Teen – 400 Child – 330 Infant – 300
r	Fraction of deposited activity retained on cow's feed grass, (from Regulatory Guide 1.109). 1.0 for radioiodine. 0.2 for particulates.
Y_p	Agricultural productivity by unit area of pasture feed grass (0.7 kg/m^2, from Regulatory Guide 1.109).
Y_s	Agricultural productivity by unit area of stored feed (2.0 kg/m^2, from Regulatory Guide 1.109).
λ_i	Nuclide decay constant for nuclide i (sec^{-1}).
λ_w	Decay constant for removal of activity on leaf and plant surfaces by weathering (5.73×10^{-7} sec^{-1}, from NUREG-0133).
$(DFL_{oi})_a$	Ingestion dose conversion factor for nuclide i, organ o, and age group a, from Tables E-11 through E-14 of Regulatory Guide 1.109 (mrem/pCi).
F_{mi}	Stable element transfer coefficient for nuclide i, in days/liter, from Table E-1 of Regulatory Guide 1.109 for cow milk.
f_p	Fraction of year that the cow is on pasture (1.0, from RG 1.109).
f_s	Fraction of the cow feed that is pasture grass while the cow is on pasture (1.0, from Regulatory Guide 1.109).
t_f	Transport time for pasture to cow, to milk, to receptor (1.73E+05 seconds, from Regulatory Guide 1.109).
t_h	Transport time from pasture, to harvest, to cow, to milk, to receptor (7.78E+06 seconds, from Regulatory Guide 1.109).

Grass/Cow/Milk – Tritium

$$R_{oapi} = K' K''' F_{mi} Q_f U_{ap} (DFL_{io})_a \left[0.75(0.5/H)\right]$$

Formula: from NUREG-0133, page 34.	
Where:	
R_{oapi}	Dose commitment factor for organ o, age group a, nuclide i, for grass/cow/milk pathway (mrem/yr per μCi/m^3). (See Appendices G through J for age group and pathway specific dose commitment factors).
K'	Units conversion factor pCi/μCi (10^6).
K'''	Units conversion factor gm/kg (10^3).
Q_F	Cow consumption rate (50 kg/day, from Regulatory Guide 1.109).
U_{ap}	Consumption rate of cow milk for age group a (liters/yr, from Regulatory Guide 1.109). Adult – 310 Teen – 400 Child – 330 Infant – 300
$(DFL_{oi})_a$	Ingestion dose conversion factor for nuclide i, organ o, and age group a, from Tables E-11 through E-14 of Regulatory Guide 1.109 (mrem/pCi).
F_{mi}	Stable element transfer coefficient for nuclide i, in days/liter, from Table E-1 of Regulatory Guide 1.109 for cow milk.
0.75	Fraction of total feed that is water (from NUREG-0133).
0.5	Ratio of specific activity of feed grass water to atmospheric water (from NUREG-0133).
H	Absolute humidity of the atmosphere (8 gm/m^3, from Regulatory Guide 1.109).

Grass/Goat/Milk

$$R_{oapi} = K' \frac{Q_F(U_{ap})}{\lambda_i + \lambda_w} F_{mi}(r)(DFL_{oi})_a \left[\frac{f_p f_s}{Y_p} + \frac{(1 - f_p f_s)e^{-\lambda_i t_h}}{Y_s} \right] e^{-\lambda_i t_f}$$

Formula: from NUREG-0133, pages 32 & 33. Where:	
R_{oapi}	Dose commitment factor for organ o, age group a, nuclide i, for grass/goat/milk pathway (m^2·mrem/yr per µCi/sec). (See Appendices G through J for age group and pathway specific dose commitment factors).
K'	Units conversion factor pCi/µCi (10^6).
Q_F	Goat consumption rate (6 kg/day, from Regulatory Guide 1.109).
U_{ap}	Consumption rate of goat milk for age group a (liters/yr, from Regulatory Guide 1.109). Adult – 310 Teen – 400 Child – 330 Infant – 300
r	Fraction of deposited activity retained on goat's feed grass, from Regulatory Guide 1.109. 1.0 for radioiodine. 0.2 for particulates.
Y_p	Agricultural productivity by unit area of pasture feed grass (0.7 kg/m^2, from Regulatory Guide 1.109).
Y_s	Agricultural productivity by unit area of stored feed (2.0 kg/m^2, from Regulatory Guide 1.109).
λ_i	Nuclide decay constant for nuclide i (sec^{-1}).
λ_w	Decay constant for removal of activity on leaf and plant surfaces by weathering (5.73×10^{-7} sec^{-1}, from NUREG-0133).
$(DFL_{oi})_a$	Ingestion dose conversion factor for nuclide i, organ o, and age group a, from Tables E-11 through E-14 of Regulatory Guide 1.109 (mrem/pCi).
F_{mi}	Stable element transfer coefficient for nuclide i, in days/liter, from Table E-2 of Regulatory Guide 1.109 for goat milk.
f_p	Fraction of year that the goat is on pasture (1.0, from RG 1.109).
f_s	Fraction of the goat feed that is pasture grass while the goat is on pasture (1.0, from Regulatory Guide 1.109).
t_f	Transport time for pasture to goat, to milk, to receptor (1.73E+05 seconds, from Regulatory Guide 1.109).
t_h	Transport time from pasture, to harvest, to goat, to milk, to receptor (7.78E+06 seconds, from Regulatory Guide 1.109).

Grass/Goat/Milk – Tritium

$$R_{oapi} = K' K''' F_{mi} Q_f U_{ap} (DFL_{oi})_a \left[0.75(0.5/H)\right]$$

Formula: from NUREG-0133, page 34.	
Where:	
R_{oapi}	Dose commitment factor for organ o, age group a, nuclide i, for grass/goat/milk pathway (mrem/yr per μCi/m^3). (See Appendices G through J for age group and pathway specific dose commitment factors).
K'	Units conversion factor pCi/μCi (10^6).
K'''	Units conversion factor gm/kg (10^3).
Q_F	Goat consumption rate (6 kg/day, from Regulatory Guide 1.109).
U_{ap}	Consumption rate of goat milk for age group a (liters/yr, from Regulatory Guide 1.109). Adult – 310 Teen – 400 Child – 330 Infant – 300
$(DFL_{oi})_a$	Ingestion dose conversion factor for nuclide i, organ o, and age group a, from Tables E-11 through E-14 of Regulatory Guide 1.109 (mrem/pCi).
F_{mi}	Stable element transfer coefficient for nuclide i, in days/liter, from Table E-2 of Regulatory Guide 1.109 for goat milk.
0.75	Fraction of total feed that is water (from NUREG-0133).
0.5	Ratio of specific activity of feed grass water to atmospheric water (from NUREG-0133).
H	Absolute humidity of the atmosphere (8 gm/m^3, from Regulatory Guide 1.109).

Grass/Cow/Meat

$$R_{oapi} = K' \frac{Q_F(U_{ap})}{\lambda_i + \lambda_w} F_{fi}(r)(DFL_i)_a \left[\frac{f_p f_s}{Y_p} + \frac{(1 - f_p f_s)e^{-\lambda_i t_h}}{Y_s} \right] e^{-\lambda_i t_f}$$

Formula: from NUREG-0133, pages 34 & 35. Where:	
R_{oapi}	Dose commitment factor for organ o, age group a, nuclide i, for grass/cow/meat pathway (m^2·mrem/yr per μCi/sec). (See Appendices G through J for age group and pathway specific dose commitment factors).
K'	Units conversion factor pCi/μCi (10^6).
Q_F	Cow consumption rate (50 kg/day, from Regulatory Guide 1.109).
U_{ap}	Consumption rate of cow meat for age group a (kg/yr, from Regulatory Guide 1.109). Adult – 110 Teen – 65 Child – 41 Infant – 0
r	Fraction of deposited activity retained on cow's feed grass (from Regulatory Guide 1.109). 1.0 for radioiodine. 0.2 for particulates.
Y_p	Agricultural productivity by unit area of pasture feed grass (0.7 kg/m^2, from Regulatory Guide 1.109).
Y_s	Agricultural productivity by unit area of stored feed (2.0 kg/m^2, from Regulatory Guide 1.109).
λ_i	Nuclide decay constant for nuclide i (sec^{-1}).
λ_w	Decay constant for removal of activity on leaf and plant surfaces by weathering (5.73×10^{-7} sec^{-1}, from NUREG-0133).
$(DFL_{oi})_a$	Ingestion dose conversion factor for nuclide i, organ o, and age group a, from Tables E-11 through E-14 of Regulatory Guide 1.109 (mrem/pCi).
F_{fi}	Stable element transfer coefficient for nuclide i, in days/kg, from Table E-1 of Regulatory Guide 1.109 for cow meat.
f_p	Fraction of year that the cow is on pasture (1.0, from RG 1.109).
f_s	Fraction of the cow feed that is pasture grass while the cow is on pasture (1.0, from Regulatory Guide 1.109).
t_f	Transport time from pasture to receptor (1.73E+06 seconds, from Regulatory Guide 1.109).
t_h	Transport time from crop field to receptor (7.78E+06 seconds, from Regulatory Guide 1.109).

Grass/Cow/Meat – Tritium

$$R_{oapi} = K' K''' F_{fi} Q_F U_{ap} (DFL_{oi})_a \left[0.75(0.5/H)\right]$$

Formula: from NUREG-0133, page 35.	
Where:	
R_{oapi}	Dose commitment factor for organ o, age group a, nuclide i, for grass/cow/meat pathway (mrem/yr per μCi/m^3). (See Appendices G through J for age group and pathway specific dose commitment factors).
K'	Units conversion factor pCi/μCi (10^6).
K'''	Units conversion factor gm/kg (10^3).
Q_F	Cow consumption rate (50 kg/day, from Regulatory Guide 1.109).
U_{ap}	Consumption rate of cow meat for age group a (kg/yr, from Regulatory Guide 1.109). Adult – 110 Teen – 65 Child – 41 Infant – 0
$(DFL_{oi})_a$	Ingestion dose conversion factor for nuclide i, organ o, and age group a, from Tables E-11 through E-14 of Regulatory Guide 1.109 (mrem/pCi).
F_{fi}	Stable element transfer coefficient for nuclide i, in days/liter, from Table E-1 of Regulatory Guide 1.109 for cow meat.
0.75	Fraction of total feed that is water (from NUREG-0133).
0.5	Ratio of specific activity of feed grass water to atmospheric water (from NUREG-0133).
H	Absolute humidity of the atmosphere (8 gm/m^3, from Regulatory Guide 1.109).

4.0.3 DIRECT RADIATION

Direct radiation is that radiation from confined sources, and does not include any external component from radioactive effluents. The point kernel method has been used to calculate offsite dose rates from radioactive materials stored in the refueling water storage tanks, reactor makeup water storage tanks, and temporary onsite radwaste storage tanks. Dose calculations using this method performed for McGuire Nuclear Station indicate direct radiation doses are much less than 0.01 mrem/yr and, therefore, make a negligible contribution to individual dose. Likewise, direct and air-scatter radiation dose contributions from the onsite Independent Spent Fuel Storage Installation (ISFSI) at McGuire have been calculated and documented in the "McGuire Nuclear Site 10CFR72.212 Written Evaluations" report. The maximum dose rate to the nearest resident from the McGuire ISFSI is calculated to be 5.32 mrem/yr. Direct radiation doses will not be calculated routinely.

4.0.4 EFFLUENT APPORTIONMENT

For the McGuire Nuclear Station the effluent releases are apportioned equally to each unit for each site as recommended by Section 3.1 of NUREG-0133, because the shared radwaste treatment systems at each site make it impractical to accurately ascribe releases to a specific reactor unit. For Annual Effluent Release Report purposes effluent releases are summed for each unit, and the maximum individual dose to the public is reported as a site total.

5.0 FUEL CYCLE CALCULATIONS

In accordance with the requirements of 40CFR190, the annual dose commitment to any member of the general public shall be calculated to assure that doses are limited to 25 millirems to the total body or any organ with the exception of the thyroid which is limited to 75 millirems. In accordance with the requirements of the Selected Licensee Commitments, the annual dose commitment shall also be calculated any time that one of the quarterly dose limits of the Selected Licensee Commitments is exceeded; these annual dose commitments may not just be calculated for the calendar year.

The "Uranium fuel cycle" is defined in 40CFR Part 190.02(b) as:

"Uranium fuel cycle means the operations of milling or uranium ore, chemical conversion of uranium, isotopic enrichment of uranium, fabrication of uranium fuel, generation of electricity by a light-water-cooled nuclear power plant using uranium fuel, and reprocessing of spent uranium fuel, to the extent that these directly support the production of electrical power for public use utilizing nuclear energy, but excludes mining operations, operations at waste disposal sites, transportation of any radioactive material in support of these operations, and the reuse of recovered non-uranium special nuclear and by-product materials from the cycle."

Based on this definition of the fuel cycle and the information in 10CFR51, Table S-3, and Wash-1248, the radiological impact of the following operations has been assessed for McGuire Nuclear Station:

5.0.1 MILLING

No milling operations occur within fifty miles of the McGuire Nuclear Station.

5.0.2 CONVERSION

No uranium hexafluoride production occurs within fifty miles of the McGuire Nuclear Station.

5.0.3 ENRICHMENT

No uranium enrichment operations occur within fifty miles of the McGuire Nuclear Station.

5.0.4 FUEL FABRICATION

No fuel fabrication operations occur within fifty miles of the McGuire Nuclear Station.

5.0.5 NUCLEAR POWER PRODUCTION

The production of electricity for public use using light-water-cooled nuclear power stations results in increments of dose to individuals within fifty miles of any station due to liquid and gaseous effluent releases and direct radiation or skyshine. The increments of dose resulting from liquid and gaseous effluent releases will be calculated using the ODCM methodology implemented in the RETDAS computer program. The dose from direct radiation, skyshine, and radiation from the station storage facilities has been estimated using conservative assumptions (see Section 4.0.3).

In certain situations more than one nuclear power station site may contribute to the doses to be considered in making fuel cycle dose assessments in accordance with 40CFR190. However, since the McGuire and Catawba nuclear stations are located approximately 30 miles apart the relative dose contribution from each site to the other is insignificant, and can be ignored in assessing compliance with 40CFR190.

5.0.6 FUEL REPROCESSING

No fuel reprocessing operations occur within fifty miles of the McGuire Nuclear Station.

5.0.7 40CFR190 TOTAL DOSE DETERMINATION

To summarize, only dose increments from nuclear power production operations (Section 5.0.5) need be considered in calculations to demonstrate compliance with the requirements of 40CFR190. The fuel cycle dose assessments for McGuire Nuclear Station only include liquid and gaseous dose contributions from McGuire and dose from McGuire's ISFSI since no other uranium fuel cycle facility contributes significantly to McGuire's maximum exposed individual. For this dose assessment, the total body and maximum organ dose contributions to the maximum exposed individual from McGuire's liquid and gaseous effluents are estimated using the following calculations:

$$D_{wb}(T) = D_{wb}(l) + D_{wb}(g)$$

$$D_{mo}(T) = D_{mo}(l) + D_{mo}(g)$$

where:

$D_{wb}(T)$ = Total estimated fuel cycle whole body dose commitment resulting from the combined liquid and gaseous effluents of McGuire during the calendar year of interest, in mrem.

$D_{mo}(T)$ = Total estimated fuel cycle maximum organ dose commitment resulting from the combined liquid and gaseous effluents of McGuire during the calendar year of interest, in mrem.

6.0 ENVIRONMENTAL LOCATIONS

6.0.1 SITE DESCRIPTION AND SAMPLE LOCATIONS

McGuire Nuclear Station is located geographically near the center of a highly industrialized region of the Carolinas. The land is predominantly rural non-farm with a small amount of land being used to support beef cattle and farming. Recreation in the area is confined mostly to the lake and shores of Lake Norman and Mountain Island reservoir. The McGuire site is in northwestern Mecklenburg County, North Carolina, 17 miles north-northwest of Charlotte, North Carolina. The site is bounded to the west by the Catawba River channel and to the north by 32,510 acre Lake Norman. Lake Norman is impounded by Duke Power Company's Cowans Ford Dam Hydroelectric Station, which is located immediately west of the site and on the Catawba River channel. The tailwater of Cowans Ford Dam is the upper limit of Mountain Island Reservoir. Mountain Island Dam is located 15 miles downstream from the site. Lookout Shoals Hydroelectric Station is at the upper reaches of Lake Norman. Marshall Steam Station is located on the western shore of Lake Norman, approximately 16 miles upstream from the site. The site exclusion radius is 2500 feet.

Table 6.0-1 and Table 6.0-2 define the sampling and TLD locations for the McGuire Radiological Monitoring Program. Figure 6.0-1 and Figure 6.0-2 illustrate these locations as compared to McGuire Nuclear Station.

6.0.2 LAND USE CENSUS DATA

The Annual Land Use Census, required by Selected Licensee Commitments, is performed to ensure that changes in the use of areas at or beyond the site boundary are identified, and that modifications to the Radiological Environmental Monitoring Program are made if required by changes in land use. This census satisfies the requirements of Section IV.B.3 of Appendix I to 10CFR50. Results are shown in Table 6.0-3 and Figure 6.0-3.

Air Monitoring at McGuire Nuclear Station

TABLE 6.0-1

MCGUIRE RADIOLOGICAL MONITORING PROGRAM SAMPLING LOCATIONS

Table 6.0-1 Codes			
W	Weekly	SM	Semimonthly
BW	BiWeekly	Q	Quarterly
M	Monthly	SA	Semiannually
C	Control		

Site #	Location Description	Air Rad. & Part.	Surface Water	Drinking Water	Shoreline Sediment	Food Products	Fish	Milk	Broad Leaf Veg.
101	North Mecklenburg Water Treatment Facility (3.31 mi E)			M					
119	Mt. Holly Municipal Water Supply (7.40 mi SSW)			M					
120	Site Boundary (0.46 mi NNE)	W							M (b)
121	Site Boundary (0.47 mi NE)	W							
125	Site Boundary (0.38 mi SW)	W							M (b)
128	Discharge Canal Bridge (0.45 mi NE)		M						
129	Discharge Canal Entrance to Lake Norman (0.51 mi ENE)				SA		SA		
130	Hwy 73 Bridge Downstream (0.52 mi SW)				SA				
131	Cowans Ford Dam (0.64 mi WNW)		M						
132	Charlotte Municipal Water Supply (11.1 mi SSE)			M					
133	Cornelius (6.23 mi ENE)	W							
134 C	East Lincoln Jr.High School (8.77 mi WNW)	W							M (b)
135 C	Plant Marshall Intake Canal (11.9 mi N)		M						
136 C	Mooresville Municipal Water Supply (12.7 mi NNE)			M					
137 C	Pinnacle Access Area (12.0 mi N)				SA		SA		
139	William Cook Dairy (2.49 mi E)							SM	
141 C	Lynch Dairy-Cows (14.8 mi WNW)							SM	
188	5 mile radius Gardens (2.79 mi NNE)					M (a)			
192	Peninsula (2.84 mi NNE)	W							
193	Site Boundary (0.19 mi N)								M (b)
194	East Lincoln County Water Supply (6.73 mi NNW)			M					
195	Fishing Access Road (0.19 mi N)	W							

(a) During Harvest Season
(b) When Available

* GPS data reflect approximate accuracy to within 2-5 meters. GPS field measurements were taken as close as possible to the item of interest.

TABLE 6.0-2

MCGUIRE RADIOLOGICAL MONITORING PROGRAM SAMPLING LOCATIONS (TLD SITES)

Site #	Location	Distance	Sector	Site #	Location	Distance	Sector
143	SITE BOUNDARY	0.27 miles	NW	164	HAMBRIGHT & BEATTIES FORD ROAD	4.64 miles	SSE
144	SITE BOUNDARY	0.46 miles	NNE	165	ARTHER AUTEN ROAD	4.57 miles	S
145	SITE BOUNDARY	0.47 miles	NE	166	NECK ROAD REFUGE BOUNDARY	4.44 miles	SSW
146	SITE BOUNDARY	0.42 miles	ENE	167	LUCIA RIVERBEND HWY/ OLD FIREHOUSE	4.87 miles	SW
147	SITE BOUNDARY	0.44 miles	E	168	OLD PLANK ROAD BRIDGE	4.60 miles	WSW
148	SITE BOUNDARY	0.46 miles	ESE	169	GLOVER LANE	4.03 miles	W
149	SITE BOUNDARY	0.50 miles	SE	170	LITTLE EGYPT ROAD	4.32 miles	WNW
151	SITE BOUNDARY	0.37 miles	S	171	TRIANGLE ACE HARDWARE	3.95 miles	NW
152	SITE BOUNDARY	0.44 miles	SSW	172	LAKESHORE SOUTH RD & ISLAND VIEW COURT	4.69 miles	NNW
153	SITE BOUNDARY	0.47 miles	SW	173 SI	KEISTLER STORE / GLENWOOD ROAD	8.39 miles	NNW
154	SITE BOUNDARY	0.45 miles	W	174 SI	EAST LINCOLN JR. HIGH SCHOOL	8.77 miles	WNW
156	SITE BOUNDARY	0.44 miles	WNW	175 C	BOGER CITY	15.5 miles	WNW
189	SITE BOUNDARY	0.43 miles	SSE	177 SI	BELMARROW ROAD / COULWOOD COMMUNITY	8.77 miles	S
190	SITE BOUNDARY	0.33 miles	WSW	178 SI	FLORIDA STEEL CORPORATION	9.32 miles	SE
157	THE POINTE/MOORESVILLE	4.69 miles	N	180 SI	MOORESVILLE WATER TREATMENT FACILITY	12.7 miles	NNE
158	BETHEL CHURCH ROAD	4.33 miles	NNE	181 SI	OLD DAVIDSON WATER TREATMENT FACILITY	7.02 miles	NE
159	HENDERSON ROAD & WEST CATAWBA AVENUE	4.73 miles	NE	182 SI	CORNELIUS / AIR SITE # 133	6.23 miles	ENE
160	ANCHORAGE MARINE SHOWROOM	4.89 miles	ENE	186 SI	MCGUIRE FISHING ACCESS ROAD ON PENINSULA	0.24 miles	NNW
161	SAM FURR ROAD & HWY 21	4.70 miles	E	187 SI	ENERGY EXPLORIUM / AIR SITE # 195	0.19 miles	N
162	RANSON ROAD	4.53 miles	ESE	191 SI	PENINSULA DEVELOPMENT / AIR SITE # 192	2.84 miles	NNE
163	MCCOY ROAD	4.94 miles	SE				

C = Control
SI = Special Interest

* GPS data reflect approximate accuracy to within 2-5 meters. GPS field measurements were taken as close as possible to the item of interest.

TABLE 6.0-3

McGuire 2006 Land Use Census Results*

Land Use Census Performed 5/23 - 5/24/2006

Sector		Distance (Miles)	Sector		Distance (Miles)
N	Nearest Residence	2.53	S	Nearest Residence	1.45
	Nearest Garden (irrigated)	2.79		Nearest Garden	3.19
	Nearest Milk Animal	-		Nearest Milk Animal	-
NNE	Nearest Residence	1.23	SSW	Nearest Residence	2.56
	Nearest Garden	2.53		Nearest Garden	2.94
	Nearest Milk Animal	-		Nearest Milk Animal	-
NE	Nearest Residence	1.21	SW	Nearest Residence	1.85
	Nearest Garden	2.18		Nearest Garden	1.89
	Nearest Milk Animal	-		Nearest Milk Animal	-
ENE	Nearest Residence	0.57	WSW	Nearest Residence	1.01
	Nearest Garden (irrigated)	2.54		Nearest Garden	1.16
	Nearest Milk Animal	-		Nearest Milk Animal	-
E	Nearest Residence	0.48	W	Nearest Residence	1.15
	Nearest Garden	1.86		Nearest Garden	1.15
	Nearest Milk Animal (COW)	2.48		Nearest Milk Animal	-
ESE	Nearest Residence	0.65	WNW	Nearest Residence	0.88
	Nearest Garden	1.31		Nearest Garden	2.14
	Nearest Milk Animal	-		Nearest Milk Animal	-
SE	Nearest Residence	0.67	NW	Nearest Residence	0.95
	Nearest Garden	1.18		Nearest Garden	1.68
	Nearest Milk Animal	-		Nearest Milk Animal	-
SSE	Nearest Residence	1.06	NNW	Nearest Residence	1.48
	Nearest Garden	2.18		Nearest Garden (irrigated)	1.69
	Nearest Milk Animal	-		Nearest Milk Animal	-

"-" indicates no occurrences within the 5 mile radius

* The land use census identifies nearest pathways to the exclusion area boundary (EAB, ~ 0.5 mile) for each of the 16 sectors. Locations beyond the nearest pathway for each sector are assumed to contain that pathway for dose calculation purposes. For the 4.5-5.0 mile sector all pathways, i.e., residence, garden, milk animal (goat), and meat animal (cow), are assumed to exist for dose calculation purposes.

** GPS data reflect approximate accuracy to within 2-5 meters. GPS field measurements were taken as close as possible to the item of interest.

Figure 6.0-1 Sampling Locations Map (Site Boundary)

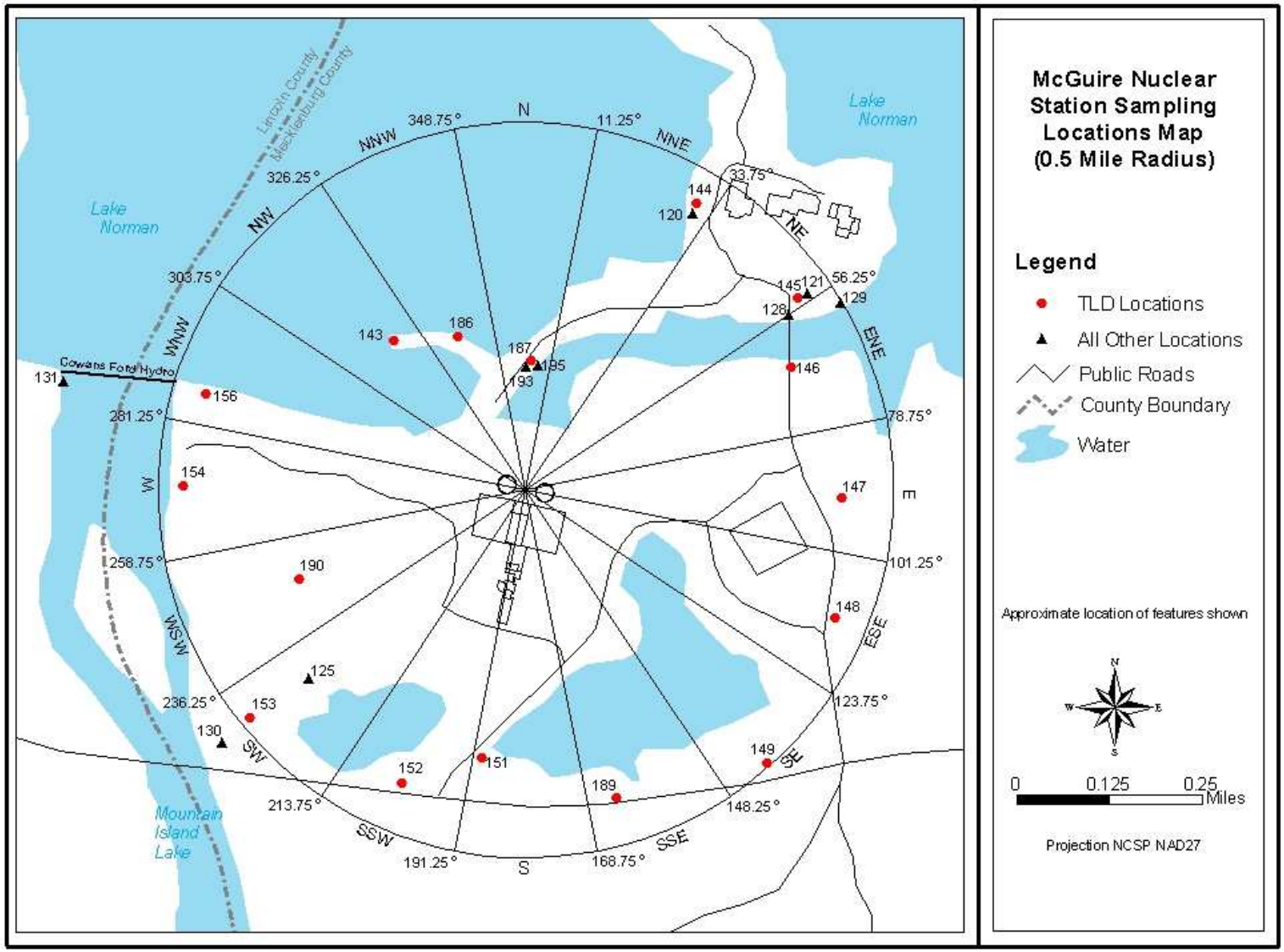

Figure 6.0-2 Sampling Locations Map (Ten Mile Radius)

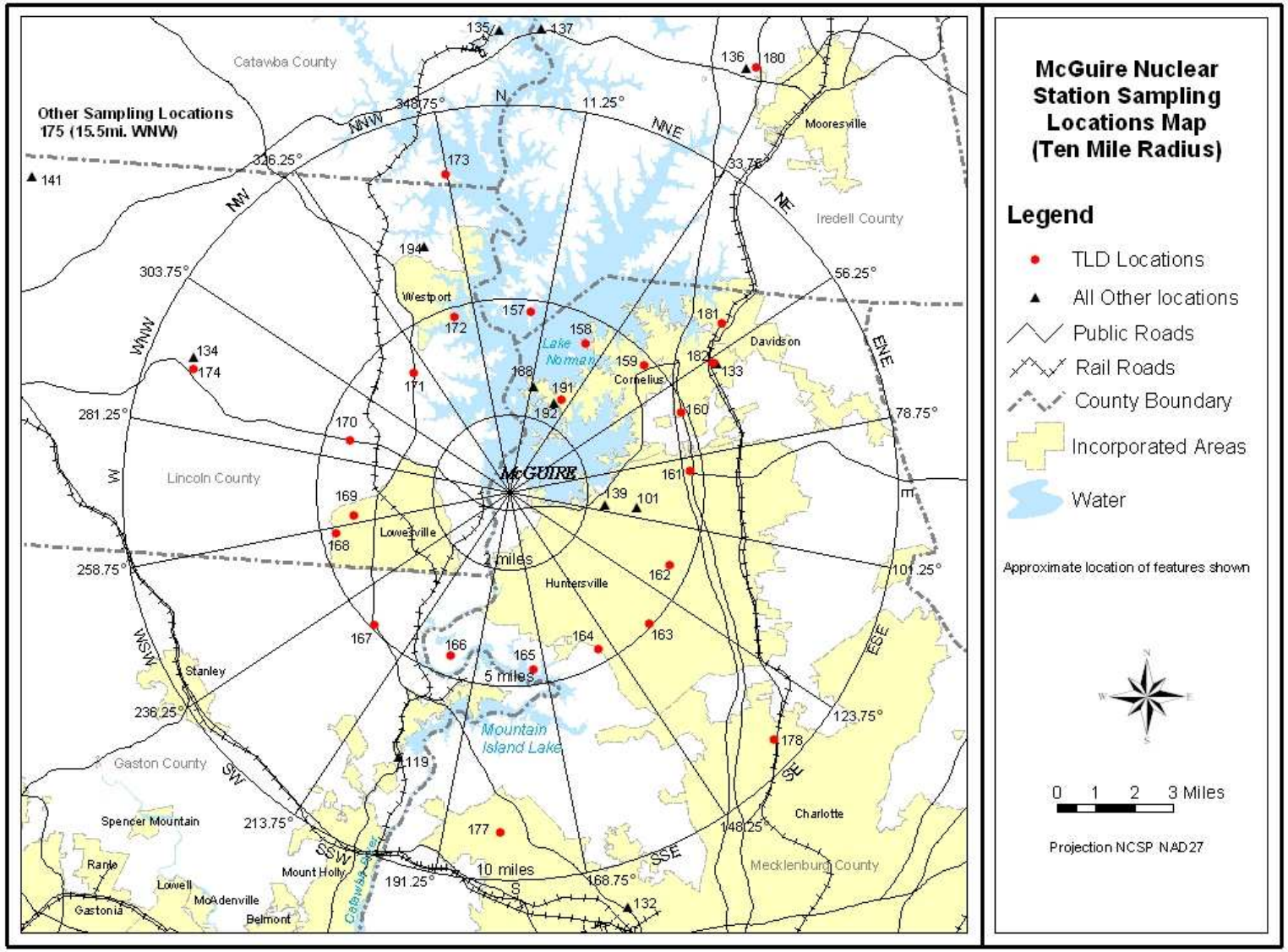

Figure 6.0-3 MNS 2006 Land Use Census Map

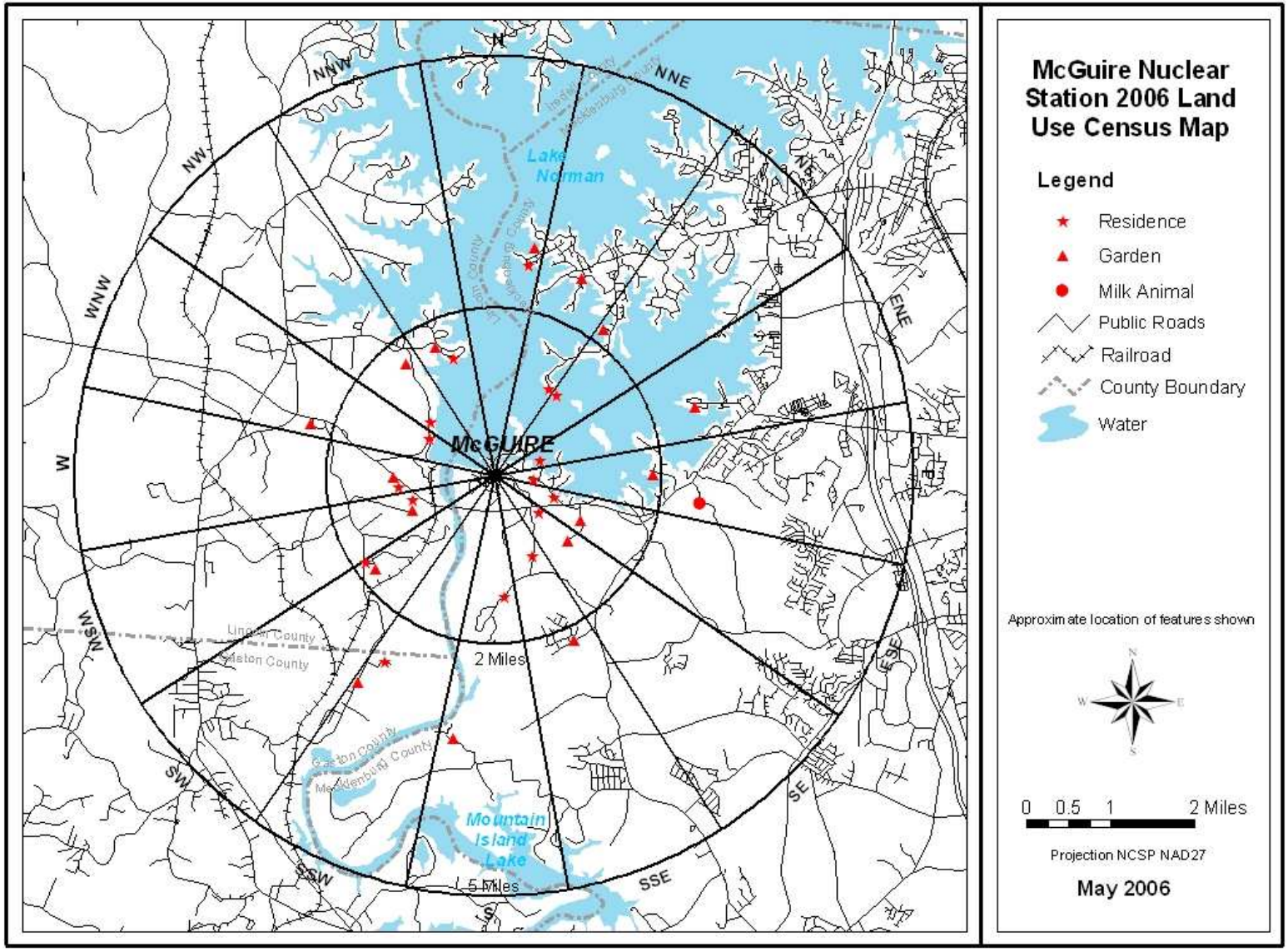

6.0.3 MCGUIRE METEOROLOGY: RELATIVE AIR CONCENTRATIONS AND DEPOSITION

Calculations of annually averaged air concentrations and deposition values from routine releases provide the air dispersion and deposition factors needed for dose assessment. The methodology is based upon Regulatory Guide 1.111, as implemented by the NRC's computer model "XOQDOQ: Computer Program for the Meteorological Evaluation of Routine Effluent Releases at Nuclear Power Stations," NUREG/CR-2919, PNL-4380, September 1982.

Five years of hourly meteorological data from the onsite instruments are processed into a representative joint frequency distribution of winds and atmospheric stability for input into the XOQDOQ model (Version 2.0). Thus, the air dispersion and deposition factors (χ/Q and D/Q) output by the model are based on a five-year climatology for the site.

6.0.3.1 XOQDOQ METHODOLOGY AND ASSUMPTIONS

A continuous, routine release (non-purge) is simulated from each unit vent. The release type is treated as "ground-level" in the model, for which surrounding terrain elevations are not input. The locale does consist of gently rolling terrain, so the default open terrain recirculation factor is applied in XOQDOQ [KOPT(8)=1]. This correction factor is recommended in RG 1.111 to adjust the straight-line airflow of the model for spatial and temporal variations that are produced by large scale weather patterns.

In order for XOQDOQ to treat the plume as a ground-level release, the exit velocity and the inside diameter of the unit vent must be input as zero. The heat emission rate of each vent is also assumed to be zero, as recommended by the model. The height of the vent (40.2 m) above plant grade elevation (760 ft msl) is then used to determine the plume centerline height. Using the building height (43.1 m) and minimum cross-sectional area of the containment building (1616 m^2), XOQDOQ applies a building wake correction to the relative air concentrations from the ground level release.

Calculations of relative air concentrations and deposition are made for grid receptor distances per sector. The model's default values for half-lives are used (i.e. no decay; 2.26 days for short-lived noble gases; and 8 days with depletion factors for all iodine radioisotopes ([DECAYS(I)= 101; 2.26; -8.0]).

6.0.3.2 METEOROLOGICAL DATA

Five years (1988-1992) of hourly, onsite meteorological data are used to produce the joint frequency distributions of wind speed and direction per stability class. The 10 m level winds are used. It is these joint frequency distributions which are input to the XOQDOQ model. Hours of calm winds are distributed by direction with the same frequency as the lowest "noncalm" wind speed class [KOPT(1)=1]. Thus, wind speed classes are established so that the lowest wind speed class is the starting threshold of the anemometer (i.e. the "calm" wind speed class). The largest wind speed class has the upper bound of

(5 m/s + max hourly wind speed). Stability classes (A-G) are based on the vertical temperature gradient, measured by the hourly averaged delta-T variable.

6.0.3.3 ANNUAL XOQDOQ COMPARISON TO THE ODCM

Each year, the prevailing winds and stability class frequencies for MNS are compared to the 5-year period (1988-1992) upon which the χ/Q and D/Q calculations have been made. The 5-year climatology is summarized in Table 6.0-4 and Table 6.0-5 below. Since the comparison is being made to a 5-year climatology, significant differences should not occur in the meteorological variables of concern (i.e. winds and delta-T). The meteorological comparison serves to verify this assumption.

Table 6.0-4

MNS Atmospheric Stability Frequency (1988-1992)

	A	B	C	D	E	F	G
Frequency (%)	13.8	4.7	6.1	**34**	**19.2**	8	14.2

Table 6.0-5

MNS Frequency of Wind Direction (From) and Speed (1988-1992)

Sector	Wind Direction Frequency (%)	Wind Speed Class (m/s)	Wind Speed Frequency (%)
N	5.6	CALM	1.3
NNE	8.9	0.45 - 0.74 m/s	5.5
NE	**10.9**	0.75 - 0.99 m/s	7.2
ENE	5.8	1.00 - 1.24 m/s	5.8
E	1.6	1.25 - 1.49 m/s	6.6
ESE	1.5	**1.50 - 1.99 m/s**	**12.8**
SE	2.3	**2.00 - 2.99 m/s**	**23.3**
SSE	3.2	**3.00 - 3.99 m/s**	**16.8**
S	**13**	4.00 - 4.99 m/s	10.8
SSW	**17.5**	5.00 - 5.99 m/s	5.5
SW	8.6	6.00 - 7.99 m/s	3.7
WSW	4.8	8.00 - 9.99 m/s	0.6
W	3.8	> 9.99 m/s	1.3
WNW	4.2		
NW	3.5		
NNW	3.6		

The joint frequency distributions of wind speed and direction versus atmospheric stability class are also determined from the annual data to provide input to the XOQDOQ model. Modeled χ/Q and D/Q values for the 0.5 mile Exclusion Area Boundary at MNS are compared to the maximum of the (1988-1992) χ/Q and D/Q values from all sectors. If the newly calculated annual dispersion and deposition values do not result in a significant increase in the calculated offsite dose relative to the 10CFR50, Appendix I dose objectives then the 5-year χ/Q and D/Q values used in the Annual Radiological Effluent Release Report (ARERR) are not revised. An increase in calculated offsite dose that is greater than five percent of the 10CFR50, Appendix I dose objectives would be considered significant enough to warrant a change in the χ/Q and D/Q values used in the ARERR. If an increasing trend in the annual χ/Q and D/Q values compared to the 5-year values is noted then a revised set of 5-year χ/Q and D/Q values will be generated. These limiting values are listed in Table 6.0-6. The entire χ/Q and D/Q list based on directional sector and distance is given in Table 6.0-8 and 6.0-9.

Table 6.0-6
MNS Limiting χ/Q and D/Q Values (1988-1992)

	(χ/Q,s/m^3) (D/Q,1/m^2)	**Distance**	**Sector**
Maximum χ/Q	7.611E-5	0.5 mile EAB	NNE
Maximum D/Q	1.403E-7	0.5 mile EAB	NNE

Note:
The McGuire 40 m tall meteorological tower was replaced with a new 60 m meteorological tower in August 1998 and relocated on site. The 60 m tower became operational at hour 0000 on September 1, 1998. Determination of atmospheric stability prior to this time uses the 30 m separation criteria shown in Table 6.0-7, while data after this time uses the 50 m separation criteria.

Table 6.0-7
MNS Delta-T Ranges per Vertical Separation Distances

Stability Class	**30 m separation Delta-T (between 40m-10m levels)**	**50 m separation Delta-T (between 60m-10m levels) Starting at hour 0000 on SEPT 1, 1998.**
A	$dT \leq -0.57$	$dT \leq -0.95$
B	$-0.57 \leq dT \leq -0.51$	$-0.95 \leq dT \leq -0.85$
C	$-0.51 \leq dT \leq -0.45$	$-0.85 \leq dT \leq -0.75$
D	$-0.45 \leq dT \leq -0.15$	$-0.75 \leq dT \leq -0.25$
E	$-0.15 \leq dT \leq 0.45$	$-0.25 \leq dT \leq 0.75$
F	$0.45 \leq dT \leq 1.2$	$0.75 \leq dT \leq 2.00$
G	$1.2 < dT$	$2.00 < dT$

Table 6.0-8

McGuire χ/Q Average Values (1988-1992) (sec/m^3)

Sector	0.5-1.0*	1.0-1.5	1.5-2.0	2.0-2.5	2.5-3.0	3.0-3.5	3.5-4.0	4.0-4.5	4.5-5.0
N	4.795E-05	1.220E-05	5.144E-06	2.879E-06	1.871E-06	1.333E-06	1.009E-06	7.985E-07	6.529E-07
NNE	7.611E-05	1.910E-05	8.103E-06	4.553E-06	2.968E-06	2.118E-06	1.607E-06	1.274E-06	1.043E-06
NE	5.330E-05	1.329E-05	5.662E-06	3.191E-06	2.084E-06	1.490E-06	1.132E-06	8.978E-07	7.357E-07
ENE	2.950E-05	7.487E-06	3.166E-06	1.776E-06	1.155E-06	8.237E-07	6.243E-07	4.943E-07	4.044E-07
E	1.742E-05	4.506E-06	1.884E-06	1.049E-06	6.787E-07	4.818E-07	3.638E-07	2.872E-07	2.344E-07
ESE	1.206E-05	3.143E-06	1.303E-06	7.209E-07	4.646E-07	3.288E-07	2.476E-07	1.951E-07	1.589E-07
SE	7.697E-06	2.011E-06	8.234E-07	4.521E-07	2.897E-07	2.040E-07	1.531E-07	1.202E-07	9.763E-08
SSE	6.179E-06	1.613E-06	6.504E-07	3.533E-07	2.246E-07	1.572E-07	1.173E-07	9.173E-08	7.421E-08
S	6.262E-06	1.581E-06	6.263E-07	3.363E-07	2.120E-07	1.475E-07	1.095E-07	8.525E-08	6.872E-08
SSW	7.346E-06	1.836E-06	7.234E-07	3.872E-07	2.435E-07	1.690E-07	1.253E-07	9.745E-08	7.847E-08
SW	8.606E-06	2.206E-06	8.483E-07	4.456E-07	2.759E-07	1.890E-07	1.386E-07	1.066E-07	8.508E-08
WSW	6.424E-06	1.671E-06	6.526E-07	3.466E-07	2.165E-07	1.493E-07	1.101E-07	8.519E-08	6.829E-08
W	3.523E-06	9.147E-07	3.697E-07	2.012E-07	1.281E-07	8.973E-08	6.705E-08	5.245E-08	4.247E-08
WNW	4.063E-06	1.071E-06	4.351E-07	2.376E-07	1.516E-07	1.064E-07	7.963E-08	6.238E-08	5.056E-08
NW	5.543E-06	1.448E-06	5.898E-07	3.226E-07	2.061E-07	1.448E-07	1.085E-07	8.504E-08	6.898E-08
NNW	1.053E-05	2.735E-06	1.131E-06	6.250E-07	4.024E-07	2.845E-07	2.141E-07	1.686E-07	1.372E-07

* Units are in miles from the station. Each χ/Q value is calculated at the closest location for the sector, e.g., 4.795E-05 sec/m^3 is the χ/Q value at 0.5 miles (N) from the station. The boundary for establishing gaseous effluent release limits is the Exclusion Area Boundary (EAB). As shown in McGuire UFSAR Figure 2-5, the EAB is defined as a 2500 foot (~0.5 mile) radius from the station center.

Table 6.0-9

McGuire D/Q Average Values (1988-1992)
(m^{-2})

Sector	0.5-1.0*	1.0-1.5	1.5-2.0	2.0-2.5	2.5-3.0	3.0-3.5	3.5-4.0	4.0-4.5	4.5-5.0
N	1.031E-07	2.516E-08	9.037E-09	4.482E-09	2.639E-09	1.728E-09	1.216E-09	9.011E-10	6.944E-10
NNE	1.403E-07	3.424E-08	1.230E-08	6.100E-09	3.592E-09	2.352E-09	1.655E-09	1.226E-09	9.451E-10
NE	7.027E-08	1.715E-08	6.161E-09	3.055E-09	1.799E-09	1.178E-09	8.289E-10	6.143E-10	4.734E-10
ENE	3.893E-08	9.504E-09	3.414E-09	1.693E-09	9.969E-10	6.527E-10	4.593E-10	3.404E-10	2.623E-10
E	3.024E-08	7.381E-09	2.651E-09	1.315E-09	7.742E-10	5.069E-10	3.567E-10	2.643E-10	2.037E-10
ESE	3.299E-08	8.052E-09	2.892E-09	1.434E-09	8.445E-10	5.530E-10	3.891E-10	2.884E-10	2.222E-10
SE	2.733E-08	6.673E-09	2.397E-09	1.189E-09	6.999E-10	4.583E-10	3.225E-10	2.390E-10	1.842E-10
SSE	2.765E-08	6.749E-09	2.424E-09	1.202E-09	7.079E-10	4.635E-10	3.262E-10	2.417E-10	1.863E-10
S	4.360E-08	1.064E-08	3.823E-09	1.896E-09	1.116E-09	7.309E-10	5.143E-10	3.811E-10	2.937E-10
SSW	6.929E-08	1.691E-08	6.075E-09	3.013E-09	1.774E-09	1.162E-09	8.174E-10	6.058E-10	4.668E-10
SW	8.605E-08	2.100E-08	7.545E-09	3.742E-09	2.203E-09	1.443E-09	1.015E-09	7.523E-10	5.797E-10
WSW	4.562E-08	1.114E-08	4.000E-09	1.984E-09	1.168E-09	7.648E-10	5.382E-10	3.988E-10	3.073E-10
W	1.268E-08	3.094E-09	1.112E-09	5.512E-10	3.246E-10	2.125E-10	1.495E-10	1.108E-10	8.541E-11
WNW	1.213E-08	2.962E-09	1.064E-09	5.276E-10	3.107E-10	2.034E-10	1.431E-10	1.061E-10	8.175E-11
NW	1.785E-08	4.358E-09	1.565E-09	7.763E-10	4.571E-10	2.993E-10	2.106E-10	1.561E-10	1.203E-10
NNW	2.520E-08	6.152E-09	2.210E-09	1.096E-09	6.453E-10	4.225E-10	2.973E-10	2.203E-10	1.698E-10

* Units are in miles from the station. Each D/Q value is calculated at the closest location for the sector, e.g., 1.031E-07 m^{-2} is the D/Q value at 0.5 miles (N) from the station. The boundary for establishing gaseous effluent release limits is the Exclusion Area Boundary (EAB). As shown in McGuire UFSAR Figure 2-5, the EAB is defined as a 2500 foot (~0.5 mile) radius from the station center.

7.0 LICENSEE INITIATED CHANGES

All changes made to the McGuire ODCM are reviewed by knowledgeable individual(s), and approved by the Station Manager and the General Office Radiation Protection Manager prior to implementation. The changes do not adversely impact the accuracy or reliability of effluent, dose, or setpoint calculations.

Table of Contents - Page i
Revised page numbers for Sections 4.0.2, 4.0.3, and 4.0.4 due to changes made in Section 4.0.

Section 2 - Page 1
Added system designation "WU" for the Condenser Unwatering System.

Section 2 - Page 2
Added detail to clarify WC (Conventional Waste Water System), WZ (Groundwater System), and WU (Condenser Unwatering System) release pathways.

Corrected the number of WC Settling Ponds from four to two.

Figure 2.0-3
Added detail to clarify WC (Conventional Waste Water System), WZ (Groundwater System), and WU (Condenser Unwatering System) release pathways.

Section 4 - Page 2
Added page break.

Provided detail on what value is assumed for the average dilution flow during the liquid release period of interest.

Section 6 – Page 4
Changed title of Table 6.0-3 to: "McGuire 2006 Land Use Census Results".

Land use census dates were changed to reflect 2006 census dates.

The distance (miles) for the N sector residence was changed from 2.54 to 2.53.
The distance (miles) for the NNE sector non-irrigated garden was changed from 2.35 to 2.53.
The distance (miles) for the E sector non-irrigated garden was changed from 0.48 to 1.86.
The distance (miles) for the S sector non-irrigated garden was changed from 3.12 to 3.19.

The descriptor of "(COW)" was added for the E sector nearest milk animal.

Section 6 - Page 7
Changed title of Figure 6.0-3 to "MNS 2006 Land Use Census Map".

Figure 6.0-3 regenerated to depict 2006 census data.

APPENDIX A

Dose Factors for Exposure to a Semi-Infinite Cloud of Noble Gases*

Nuclide	K_i Total Body mrem/yr µCi/m^3	L_i Skin mrem/yr µCi/m^3	M_i Gamma Air mrad/yr µCi/m^3	N_i Beta Air mrad/yr µCi/m^3
AR-41	8.840E+03	2.690E+03	9.300E+03	3.280E+03
KR-83M	7.560E-02	0.000E+00	1.930E+01	2.880E+02
KR-85M	1.170E+03	1.460E+03	1.230E+03	1.970E+03
KR-85	1.610E+01	1.340E+03	1.720E+01	1.950E+03
KR-87	5.920E+03	9.730E+03	6.170E+03	1.030E+04
KR-88	1.470E+04	2.370E+03	1.520E+04	2.930E+03
KR-89	1.660E+04	1.010E+04	1.730E+04	1.060E+04
KR-90	1.560E+04	7.290E+03	1.630E+04	7.830E+03
XE-131M	9.150E+01	4.760E+02	1.560E+02	1.110E+03
XE-133M	2.510E+02	9.940E+02	3.270E+02	1.480E+03
XE-133	2.940E+02	3.060E+02	3.530E+02	1.050E+03
XE-135M	3.120E+03	7.110E+02	3.360E+03	7.390E+02
XE-135	1.810E+03	1.860E+03	1.920E+03	2.460E+03
XE-137	1.420E+03	1.220E+04	1.510E+03	1.270E+04
XE-138	8.830E+03	4.130E+03	9.210E+03	4.750E+03

* Reference Regulatory Guide 1.109, Table B-1

APPENDIX B

P_i Dose Factors for use in the Gaseous Release Rate Limit Calculations

Agegroup:	CHILD	Pathway:	Inhalation (INHL)			Units:	mrem/yr / µCi/m^3	
Nuclide	**Bone**	**Liver**	**Thyroid**	**Kidney**	**Lung**	**Gilli**	**Skin**	**Total Body**
H-3	0.000E+00	1.120E+03	1.120E+03	1.120E+03	1.120E+03	1.120E+03	0.000E+00	1.120E+03
C-14	3.590E+04	6.730E+03	6.730E+03	6.730E+03	6.730E+03	6.730E+03	0.000E+00	6.730E+03
NA-24	1.610E+04	1.610E+04	1.610E+04	1.610E+04	1.610E+04	1.610E+04	0.000E+00	1.610E+04
P-32	2.600E+06	1.140E+05	0.000E+00	0.000E+00	0.000E+00	4.220E+04	0.000E+00	9.880E+04
CR-51	0.000E+00	0.000E+00	8.550E+01	2.430E+01	1.700E+04	1.080E+03	0.000E+00	1.540E+02
MN-54	0.000E+00	4.290E+04	0.000E+00	1.000E+04	1.580E+06	2.290E+04	0.000E+00	9.510E+03
MN-56	0.000E+00	1.660E+00	0.000E+00	1.670E+00	1.310E+04	1.230E+05	0.000E+00	3.120E-01
FE-55	4.740E+04	2.520E+04	0.000E+00	0.000E+00	1.110E+05	2.870E+03	0.000E+00	7.770E+03
FE-59	2.070E+04	3.340E+04	0.000E+00	0.000E+00	1.270E+06	7.070E+04	0.000E+00	1.670E+04
CO-58	0.000E+00	1.770E+03	0.000E+00	0.000E+00	1.110E+06	3.440E+04	0.000E+00	3.160E+03
CO-60	0.000E+00	1.310E+04	0.000E+00	0.000E+00	7.070E+06	9.620E+04	0.000E+00	2.260E+04
NI-63	8.210E+05	4.620E+04	0.000E+00	0.000E+00	2.750E+05	6.330E+03	0.000E+00	2.800E+04
NI-65	2.990E+00	2.960E-01	0.000E+00	0.000E+00	8.180E+03	8.400E+04	0.000E+00	1.640E-01
CU-64	0.000E+00	1.990E+00	0.000E+00	6.030E+00	9.580E+03	3.670E+04	0.000E+00	1.070E+00
ZN-65	4.260E+04	1.130E+05	0.000E+00	7.140E+04	9.950E+05	1.630E+04	0.000E+00	7.030E+04
ZN-69	6.700E-02	9.660E-02	0.000E+00	5.850E-02	1.420E+03	1.020E+04	0.000E+00	8.920E-03
BR-83	0.000E+00	0.000E+00	0.000E+00	0.000E+00	0.000E+00	0.000E+00	0.000E+00	4.740E+02
BR-84	0.000E+00	0.000E+00	0.000E+00	0.000E+00	0.000E+00	0.000E+00	0.000E+00	5.480E+02
BR-85	0.000E+00	0.000E+00	0.000E+00	0.000E+00	0.000E+00	0.000E+00	0.000E+00	2.530E+01
RB-86	0.000E+00	1.980E+05	0.000E+00	0.000E+00	0.000E+00	7.990E+03	0.000E+00	1.140E+05
RB-88	0.000E+00	5.620E+02	0.000E+00	0.000E+00	0.000E+00	1.720E+01	0.000E+00	3.660E+02
RB-89	0.000E+00	3.450E+02	0.000E+00	0.000E+00	0.000E+00	1.890E+00	0.000E+00	2.900E+02
SR-89	5.990E+05	0.000E+00	0.000E+00	0.000E+00	2.160E+06	1.670E+05	0.000E+00	1.720E+04
SR-90	1.010E+08	0.000E+00	0.000E+00	0.000E+00	1.480E+07	3.430E+05	0.000E+00	6.440E+06
SR-91	1.210E+02	0.000E+00	0.000E+00	0.000E+00	5.330E+04	1.740E+05	0.000E+00	4.590E+00

APPENDIX B

P_i Dose Factors for use in the Gaseous Release Rate Limit Calculations

Agegroup:	CHILD	Pathway:	Inhalation (INHL)			Units:	mrem/yr / µCi/m^3	
Nuclide	**Bone**	**Liver**	**Thyroid**	**Kidney**	**Lung**	**Gilli**	**Skin**	**Total Body**
SR-92	1.310E+01	0.000E+00	0.000E+00	0.000E+00	2.400E+04	2.420E+05	0.000E+00	5.250E-01
Y-90	4.110E+03	0.000E+00	0.000E+00	0.000E+00	2.620E+05	2.680E+05	0.000E+00	1.110E+02
Y-91	9.140E+05	0.000E+00	0.000E+00	0.000E+00	2.630E+06	1.840E+05	0.000E+00	2.440E+04
Y-91M	5.070E-01	0.000E+00	0.000E+00	0.000E+00	2.810E+03	1.720E+03	0.000E+00	1.840E-02
Y-92	2.030E+01	0.000E+00	0.000E+00	0.000E+00	2.390E+04	2.390E+05	0.000E+00	5.810E-01
Y-93	1.860E+02	0.000E+00	0.000E+00	0.000E+00	7.440E+04	3.880E+05	0.000E+00	5.110E+00
ZR-95	1.900E+05	4.180E+04	0.000E+00	5.960E+04	2.230E+06	6.110E+04	0.000E+00	3.700E+04
ZR-97	1.880E+02	2.720E+01	0.000E+00	3.880E+01	1.130E+05	3.510E+05	0.000E+00	1.600E+01
NB-95	2.350E+04	9.180E+03	0.000E+00	8.620E+03	6.140E+05	3.700E+04	0.000E+00	6.550E+03
MO-99	0.000E+00	1.720E+02	0.000E+00	3.920E+02	1.350E+05	1.270E+05	0.000E+00	4.260E+01
TC-99M	1.780E-03	3.480E-03	0.000E+00	5.070E-02	9.510E+02	4.810E+03	0.000E+00	5.770E-02
TC-101	8.100E-05	8.510E-05	0.000E+00	1.450E-03	5.850E+02	1.630E+01	0.000E+00	1.080E-03
RU-103	2.790E+03	0.000E+00	0.000E+00	7.030E+03	6.620E+05	4.480E+04	0.000E+00	1.070E+03
RU-105	1.530E+00	0.000E+00	0.000E+00	1.340E+00	1.590E+04	9.950E+04	0.000E+00	5.550E-01
RU-106	1.360E+05	0.000E+00	0.000E+00	1.840E+05	1.430E+07	4.290E+05	0.000E+00	1.690E+04
AG-110M	1.690E+04	1.140E+04	0.000E+00	2.120E+04	5.480E+06	1.000E+05	0.000E+00	9.140E+03
TE-125M	6.730E+03	2.330E+03	1.920E+03	0.000E+00	4.770E+05	3.380E+04	0.000E+00	9.140E+02
TE-127	2.770E+00	9.510E-01	1.960E+00	7.070E+00	1.000E+04	5.620E+04	0.000E+00	6.100E-01
TE-127M	2.490E+04	8.550E+03	6.070E+03	6.360E+04	1.480E+06	7.140E+04	0.000E+00	3.020E+03
TE-129	9.770E-02	3.500E-02	7.140E-02	2.570E-01	2.930E+03	2.550E+04	0.000E+00	2.380E-02
TE-129M	1.920E+04	6.840E+03	6.330E+03	5.030E+04	1.760E+06	1.820E+05	0.000E+00	3.040E+03
TE-131	2.170E-02	8.440E-03	1.700E-02	5.880E-02	2.050E+03	1.330E+03	0.000E+00	6.590E-03
TE-131M	1.340E+02	5.920E+01	9.770E+01	4.000E+02	2.060E+05	3.080E+05	0.000E+00	5.070E+01
TE-132	4.810E+02	2.720E+02	3.170E+02	1.770E+03	3.770E+05	1.380E+05	0.000E+00	2.630E+02
I-130	8.180E+03	1.640E+04	1.850E+06	2.450E+04	0.000E+00	5.110E+03	0.000E+00	8.440E+03

APPENDIX B

P_i Dose Factors for use in the Gaseous Release Rate Limit Calculations

Agegroup:	CHILD	Pathway:	Inhalation (INHL)			Units:	mrem/yr / µCi/m^3	
Nuclide	**Bone**	**Liver**	**Thyroid**	**Kidney**	**Lung**	**Gilli**	**Skin**	**Total Body**
I-131	4.810E+04	4.810E+04	1.620E+07	7.880E+04	0.000E+00	2.840E+03	0.000E+00	2.730E+04
I-132	2.120E+03	4.070E+03	1.940E+05	6.250E+03	0.000E+00	3.200E+03	0.000E+00	1.880E+03
I-133	1.660E+04	2.030E+04	3.850E+06	3.380E+04	0.000E+00	5.480E+03	0.000E+00	7.700E+03
I-134	1.170E+03	2.160E+03	5.070E+04	3.300E+03	0.000E+00	9.550E+02	0.000E+00	9.950E+02
I-135	4.920E+03	8.730E+03	7.920E+05	1.340E+04	0.000E+00	4.440E+03	0.000E+00	4.140E+03
CS-134	6.510E+05	1.010E+06	0.000E+00	3.300E+05	1.210E+05	3.850E+03	0.000E+00	2.250E+05
CS-136	6.510E+04	1.710E+05	0.000E+00	9.550E+04	1.450E+04	4.180E+03	0.000E+00	1.160E+05
CS-137	9.060E+05	8.250E+05	0.000E+00	2.820E+05	1.040E+05	3.620E+03	0.000E+00	1.280E+05
CS-138	6.330E+02	8.400E+02	0.000E+00	6.220E+02	6.810E+01	2.700E+02	0.000E+00	5.550E+02
BA-139	1.840E+00	9.840E-04	0.000E+00	8.620E-04	5.770E+03	5.770E+04	0.000E+00	5.360E-02
BA-140	7.400E+04	6.480E+01	0.000E+00	2.110E+01	1.740E+06	1.020E+05	0.000E+00	4.330E+03
BA-141	1.960E-01	1.090E-04	0.000E+00	9.470E-05	2.920E+03	2.750E+02	0.000E+00	6.360E-03
BA-142	5.000E-02	3.600E-05	0.000E+00	2.910E-05	1.640E+03	2.740E+00	0.000E+00	2.790E-03
LA-140	6.440E+02	2.250E+02	0.000E+00	0.000E+00	1.830E+05	2.260E+05	0.000E+00	7.550E+01
LA-142	1.300E+00	4.110E-01	0.000E+00	0.000E+00	8.700E+03	7.580E+04	0.000E+00	1.290E-01
CE-141	3.920E+04	1.950E+04	0.000E+00	8.550E+03	5.440E+05	5.660E+04	0.000E+00	2.900E+03
CE-143	3.660E+02	1.990E+02	0.000E+00	8.360E+01	1.150E+05	1.270E+05	0.000E+00	2.870E+01
CE-144	6.770E+06	2.120E+06	0.000E+00	1.170E+06	1.200E+07	3.880E+05	0.000E+00	3.610E+05
PR-143	1.850E+04	5.550E+03	0.000E+00	3.000E+03	4.330E+05	9.730E+04	0.000E+00	9.140E+02
PR-144	5.960E-02	1.850E-02	0.000E+00	9.770E-03	1.570E+03	1.970E+02	0.000E+00	3.000E-03
ND-147	1.080E+04	8.730E+03	0.000E+00	4.810E+03	3.280E+05	8.210E+04	0.000E+00	6.810E+02
W-187	1.630E+01	9.660E+00	0.000E+00	0.000E+00	4.110E+04	9.100E+04	0.000E+00	4.330E+00
NP-239	4.660E+02	3.340E+01	0.000E+00	9.730E+01	5.810E+04	6.400E+04	0.000E+00	2.350E+01

APPENDIX C

A_i Adult Dose Factors for use in the Liquid Dose Calculations

Agegroup:	ADULT	Pathway:	Potable Water (PWtr)			Units:	mrem/hr / µCi/ml	
Nuclide	**Bone**	**Liver**	**Thyroid**	**Kidney**	**Lung**	**Gilli**	**Skin**	**Total Body**
H-3	0.000E+00	8.740E+00	8.740E+00	8.740E+00	8.740E+00	8.740E+00	0.000E+00	8.740E+00
C-14	2.360E+02	4.730E+01	4.730E+01	4.730E+01	4.730E+01	4.730E+01	0.000E+00	4.730E+01
NA-24	8.140E+01	8.140E+01	8.140E+01	8.140E+01	8.140E+01	8.140E+01	0.000E+00	8.140E+01
P-32	1.570E+04	9.750E+02	0.000E+00	0.000E+00	0.000E+00	1.760E+03	0.000E+00	6.060E+02
CR-51	0.000E+00	0.000E+00	1.310E-01	4.820E-02	2.900E-01	5.500E+01	0.000E+00	2.190E-01
MN-54	0.000E+00	3.800E+02	0.000E+00	1.130E+02	0.000E+00	1.160E+03	0.000E+00	7.250E+01
MN-56	0.000E+00	3.800E-01	0.000E+00	4.820E-01	0.000E+00	1.210E+01	0.000E+00	6.740E-02
FE-55	2.290E+02	1.580E+02	0.000E+00	0.000E+00	8.820E+01	9.070E+01	0.000E+00	3.690E+01
FE-59	3.580E+02	8.420E+02	0.000E+00	0.000E+00	2.350E+02	2.810E+03	0.000E+00	3.230E+02
CO-58	0.000E+00	6.170E+01	0.000E+00	0.000E+00	0.000E+00	1.250E+03	0.000E+00	1.380E+02
CO-60	0.000E+00	1.780E+02	0.000E+00	0.000E+00	0.000E+00	3.340E+03	0.000E+00	3.930E+02
NI-63	1.080E+04	7.500E+02	0.000E+00	0.000E+00	0.000E+00	1.560E+02	0.000E+00	3.630E+02
NI-65	1.620E+00	2.100E-01	0.000E+00	0.000E+00	0.000E+00	5.340E+00	0.000E+00	9.600E-02
CU-64	0.000E+00	3.590E+00	0.000E+00	9.060E+00	0.000E+00	3.060E+02	0.000E+00	1.690E+00
ZN-65	4.020E+02	1.280E+03	0.000E+00	8.560E+02	0.000E+00	8.060E+02	0.000E+00	5.780E+02
ZN-69	1.070E-04	2.050E-04	0.000E+00	1.330E-04	0.000E+00	3.080E-05	0.000E+00	1.430E-05
BR-83	0.000E+00	0.000E+00	0.000E+00	0.000E+00	0.000E+00	1.480E-01	0.000E+00	1.030E-01
BR-84	0.000E+00	0.000E+00	0.000E+00	0.000E+00	0.000E+00	5.270E-12	0.000E+00	6.710E-07
BR-85	0.000E+00	0.000E+00	0.000E+00	0.000E+00	0.000E+00	0.000E+00	0.000E+00	4.380E-77
RB-86	0.000E+00	1.720E+03	0.000E+00	0.000E+00	0.000E+00	3.400E+02	0.000E+00	8.030E+02
RB-88	0.000E+00	3.360E-12	0.000E+00	0.000E+00	0.000E+00	4.640E-23	0.000E+00	1.780E-12
RB-89	0.000E+00	3.090E-14	0.000E+00	0.000E+00	0.000E+00	1.790E-27	0.000E+00	2.170E-14
SR-89	2.550E+04	0.000E+00	0.000E+00	0.000E+00	0.000E+00	4.080E+03	0.000E+00	7.310E+02
SR-90	6.310E+05	0.000E+00	0.000E+00	0.000E+00	0.000E+00	1.820E+04	0.000E+00	1.550E+05
SR-91	1.960E+02	0.000E+00	0.000E+00	0.000E+00	0.000E+00	9.350E+02	0.000E+00	7.930E+00

APPENDIX C

A_i Adult Dose Factors for use in the Liquid Dose Calculations

Agegroup:	ADULT	Pathway:	Potable Water (PWtr)			Units:	mrem/hr / µCi/ml	
Nuclide	**Bone**	**Liver**	**Thyroid**	**Kidney**	**Lung**	**Gilli**	**Skin**	**Total Body**
SR-92	8.290E+00	0.000E+00	0.000E+00	0.000E+00	0.000E+00	1.640E+02	0.000E+00	3.590E-01
Y-90	7.030E-01	0.000E+00	0.000E+00	0.000E+00	0.000E+00	7.460E+03	0.000E+00	1.890E-02
Y-91	1.170E+01	0.000E+00	0.000E+00	0.000E+00	0.000E+00	6.420E+03	0.000E+00	3.120E-01
Y-91M	3.360E-07	0.000E+00	0.000E+00	0.000E+00	0.000E+00	9.860E-07	0.000E+00	1.300E-08
Y-92	6.710E-03	0.000E+00	0.000E+00	0.000E+00	0.000E+00	1.170E+02	0.000E+00	1.960E-04
Y-93	9.770E-02	0.000E+00	0.000E+00	0.000E+00	0.000E+00	3.100E+03	0.000E+00	2.700E-03
ZR-95	2.520E+00	8.070E-01	0.000E+00	1.270E+00	0.000E+00	2.560E+03	0.000E+00	5.460E-01
ZR-97	8.540E-02	1.720E-02	0.000E+00	2.600E-02	0.000E+00	5.340E+03	0.000E+00	7.880E-03
NB-95	5.130E-01	2.850E-01	0.000E+00	2.820E-01	0.000E+00	1.730E+03	0.000E+00	1.530E-01
MO-99	0.000E+00	3.160E+02	0.000E+00	7.160E+02	0.000E+00	7.330E+02	0.000E+00	6.020E+01
TC-99M	5.160E-03	1.460E-02	0.000E+00	2.210E-01	7.140E-03	8.630E+00	0.000E+00	1.860E-01
TC-101	1.130E-17	1.630E-17	0.000E+00	2.930E-16	8.320E-18	4.890E-29	0.000E+00	1.600E-16
RU-103	1.530E+01	0.000E+00	0.000E+00	5.820E+01	0.000E+00	1.780E+03	0.000E+00	6.570E+00
RU-105	1.970E-01	0.000E+00	0.000E+00	2.540E+00	0.000E+00	1.200E+02	0.000E+00	7.760E-02
RU-106	2.290E+02	0.000E+00	0.000E+00	4.410E+02	0.000E+00	1.480E+04	0.000E+00	2.890E+01
AG-110M	1.330E+01	1.230E+01	0.000E+00	2.420E+01	0.000E+00	5.020E+03	0.000E+00	7.300E+00
TE-125M	2.220E+02	8.030E+01	6.670E+01	9.020E+02	0.000E+00	8.850E+02	0.000E+00	2.970E+01
TE-127	3.780E+00	1.360E+00	2.800E+00	1.540E+01	0.000E+00	2.980E+02	0.000E+00	8.170E-01
TE-127M	5.620E+02	2.010E+02	1.440E+02	2.280E+03	0.000E+00	1.880E+03	0.000E+00	6.840E+01
TE-129	1.920E-03	7.230E-04	1.480E-03	8.080E-03	0.000E+00	1.450E-03	0.000E+00	4.690E-04
TE-129M	9.470E+02	3.530E+02	3.250E+02	3.950E+03	0.000E+00	4.770E+03	0.000E+00	1.500E+02
TE-131	3.520E-09	1.470E-09	2.900E-09	1.540E-08	0.000E+00	4.990E-10	0.000E+00	1.110E-09
TE-131M	1.090E+02	5.340E+01	8.450E+01	5.400E+02	0.000E+00	5.300E+03	0.000E+00	4.450E+01
TE-132	1.880E+02	1.220E+02	1.350E+02	1.170E+03	0.000E+00	5.770E+03	0.000E+00	1.140E+02
I-130	3.210E+01	9.460E+01	8.020E+03	1.480E+02	0.000E+00	8.140E+01	0.000E+00	3.730E+01

APPENDIX C

A_i Adult Dose Factors for use in the Liquid Dose Calculations

Agegroup:	ADULT	Pathway:	Potable Water (PWtr)			Units:	mrem/hr / µCi/ml	
Nuclide	**Bone**	**Liver**	**Thyroid**	**Kidney**	**Lung**	**Gilli**	**Skin**	**Total Body**
I-131	3.320E+02	4.740E+02	1.550E+05	8.130E+02	0.000E+00	1.250E+02	0.000E+00	2.720E+02
I-132	4.540E-01	1.220E+00	4.250E+01	1.940E+00	0.000E+00	2.280E-01	0.000E+00	4.250E-01
I-133	7.920E+01	1.380E+02	2.020E+04	2.400E+02	0.000E+00	1.240E+02	0.000E+00	4.200E+01
I-134	6.580E-04	1.790E-03	3.100E-02	2.840E-03	0.000E+00	1.560E-06	0.000E+00	6.390E-04
I-135	1.050E+01	2.750E+01	1.810E+03	4.400E+01	0.000E+00	3.100E+01	0.000E+00	1.010E+01
CS-134	5.170E+03	1.230E+04	0.000E+00	3.980E+03	1.320E+03	2.150E+02	0.000E+00	1.010E+04
CS-136	5.280E+02	2.080E+03	0.000E+00	1.160E+03	1.590E+02	2.370E+02	0.000E+00	1.500E+03
CS-137	6.630E+03	9.070E+03	0.000E+00	3.080E+03	1.020E+03	1.760E+02	0.000E+00	5.940E+03
CS-138	8.450E-07	1.670E-06	0.000E+00	1.230E-06	1.210E-07	7.120E-12	0.000E+00	8.260E-07
BA-139	1.990E-02	1.420E-05	0.000E+00	1.330E-05	8.050E-06	3.530E-02	0.000E+00	5.830E-04
BA-140	1.640E+03	2.070E+00	0.000E+00	7.020E-01	1.180E+00	3.390E+03	0.000E+00	1.080E+02
BA-141	5.440E-12	4.120E-15	0.000E+00	3.830E-15	2.340E-15	2.570E-21	0.000E+00	1.840E-13
BA-142	6.290E-21	6.470E-24	0.000E+00	5.460E-24	3.660E-24	8.860E-39	0.000E+00	3.960E-22
LA-140	1.690E-01	8.530E-02	0.000E+00	0.000E+00	0.000E+00	6.260E+03	0.000E+00	2.250E-02
LA-142	5.720E-05	2.600E-05	0.000E+00	0.000E+00	0.000E+00	1.900E-01	0.000E+00	6.480E-06
CE-141	7.710E-01	5.210E-01	0.000E+00	2.420E-01	0.000E+00	1.990E+03	0.000E+00	5.910E-02
CE-143	1.070E-01	7.890E+01	0.000E+00	3.470E-02	0.000E+00	2.950E+03	0.000E+00	8.730E-03
CE-144	4.060E+01	1.700E+01	0.000E+00	1.010E+01	0.000E+00	1.370E+04	0.000E+00	2.180E+00
PR-143	7.460E-01	2.990E-01	0.000E+00	1.730E-01	0.000E+00	3.270E+03	0.000E+00	3.700E-02
PR-144	7.350E-16	3.050E-16	0.000E+00	1.720E-16	0.000E+00	1.060E-22	0.000E+00	3.730E-17
ND-147	5.070E-01	5.860E-01	0.000E+00	3.430E-01	0.000E+00	2.810E+03	0.000E+00	3.510E-02
W-187	6.050E+00	5.050E+00	0.000E+00	0.000E+00	0.000E+00	1.660E+03	0.000E+00	1.770E+00
NP-239	8.550E-02	8.400E-03	0.000E+00	2.620E-02	0.000E+00	1.720E+03	0.000E+00	4.630E-03

APPENDIX C

A_i Adult Dose Factors for use in the Liquid Dose Calculations

Agegroup:	ADULT	Pathway:	Fresh Water Fish - Sport (FFSP)			Units:	mrem/hr / µCi/ml	
Nuclide	**Bone**	**Liver**	**Thyroid**	**Kidney**	**Lung**	**Gilli**	**Skin**	**Total Body**
H-3	0.000E+00	2.260E-01	2.260E-01	2.260E-01	2.260E-01	2.260E-01	0.000E+00	2.260E-01
C-14	3.130E+04	6.260E+03	6.260E+03	6.260E+03	6.260E+03	6.260E+03	0.000E+00	6.260E+03
NA-24	1.350E+02	1.350E+02	1.350E+02	1.350E+02	1.350E+02	1.350E+02	0.000E+00	1.350E+02
P-32	1.320E+06	8.210E+04	0.000E+00	0.000E+00	0.000E+00	1.480E+05	0.000E+00	5.100E+04
CR-51	0.000E+00	0.000E+00	7.420E-01	2.740E-01	1.650E+00	3.120E+02	0.000E+00	1.240E+00
MN-54	0.000E+00	4.370E+03	0.000E+00	1.300E+03	0.000E+00	1.340E+04	0.000E+00	8.330E+02
MN-56	0.000E+00	1.730E-01	0.000E+00	2.200E-01	0.000E+00	5.530E+00	0.000E+00	3.070E-02
FE-55	6.580E+02	4.550E+02	0.000E+00	0.000E+00	2.540E+02	2.610E+02	0.000E+00	1.060E+02
FE-59	1.020E+03	2.400E+03	0.000E+00	0.000E+00	6.720E+02	8.010E+03	0.000E+00	9.220E+02
CO-58	0.000E+00	8.830E+01	0.000E+00	0.000E+00	0.000E+00	1.790E+03	0.000E+00	1.980E+02
CO-60	0.000E+00	2.560E+02	0.000E+00	0.000E+00	0.000E+00	4.810E+03	0.000E+00	5.650E+02
NI-63	3.110E+04	2.160E+03	0.000E+00	0.000E+00	0.000E+00	4.500E+02	0.000E+00	1.040E+03
NI-65	1.720E-01	2.230E-02	0.000E+00	0.000E+00	0.000E+00	5.660E-01	0.000E+00	1.020E-02
CU-64	0.000E+00	2.680E+00	0.000E+00	6.760E+00	0.000E+00	2.290E+02	0.000E+00	1.260E+00
ZN-65	2.310E+04	7.350E+04	0.000E+00	4.920E+04	0.000E+00	4.630E+04	0.000E+00	3.320E+04
ZN-69	7.730E-07	1.480E-06	0.000E+00	9.610E-07	0.000E+00	2.220E-07	0.000E+00	1.030E-07
BR-83	0.000E+00	0.000E+00	0.000E+00	0.000E+00	0.000E+00	5.500E-02	0.000E+00	3.820E-02
BR-84	0.000E+00	0.000E+00	0.000E+00	0.000E+00	0.000E+00	9.850E-18	0.000E+00	1.250E-12
BR-85	0.000E+00	0.000E+00	0.000E+00	0.000E+00	0.000E+00	0.000E+00	0.000E+00	0.000E+00
RB-86	0.000E+00	9.730E+04	0.000E+00	0.000E+00	0.000E+00	1.920E+04	0.000E+00	4.530E+04
RB-88	0.000E+00	1.290E-22	0.000E+00	0.000E+00	0.000E+00	1.780E-33	0.000E+00	6.830E-23
RB-89	0.000E+00	1.640E-26	0.000E+00	0.000E+00	0.000E+00	9.560E-40	0.000E+00	1.160E-26
SR-89	2.180E+04	0.000E+00	0.000E+00	0.000E+00	0.000E+00	3.500E+03	0.000E+00	6.260E+02
SR-90	5.440E+05	0.000E+00	0.000E+00	0.000E+00	0.000E+00	1.570E+04	0.000E+00	1.340E+05
SR-91	7.050E+01	0.000E+00	0.000E+00	0.000E+00	0.000E+00	3.360E+02	0.000E+00	2.850E+00

APPENDIX C

A_i Adult Dose Factors for use in the Liquid Dose Calculations

Agegroup:	ADULT	Pathway:	Fresh Water Fish - Sport (FFSP)			Units:	mrem/hr / µCi/ml	
Nuclide	**Bone**	**Liver**	**Thyroid**	**Kidney**	**Lung**	**Gilli**	**Skin**	**Total Body**
SR-92	3.320E-01	0.000E+00	0.000E+00	0.000E+00	0.000E+00	6.570E+00	0.000E+00	1.430E-02
Y-90	4.440E-01	0.000E+00	0.000E+00	0.000E+00	0.000E+00	4.710E+03	0.000E+00	1.190E-02
Y-91	8.340E+00	0.000E+00	0.000E+00	0.000E+00	0.000E+00	4.590E+03	0.000E+00	2.230E-01
Y-91M	1.070E-11	0.000E+00	0.000E+00	0.000E+00	0.000E+00	3.150E-11	0.000E+00	4.150E-13
Y-92	4.600E-04	0.000E+00	0.000E+00	0.000E+00	0.000E+00	8.060E+00	0.000E+00	1.340E-05
Y-93	3.080E-02	0.000E+00	0.000E+00	0.000E+00	0.000E+00	9.770E+02	0.000E+00	8.500E-04
ZR-95	2.380E-01	7.620E-02	0.000E+00	1.200E-01	0.000E+00	2.410E+02	0.000E+00	5.160E-02
ZR-97	4.960E-03	1.000E-03	0.000E+00	1.510E-03	0.000E+00	3.100E+02	0.000E+00	4.570E-04
NB-95	4.380E+02	2.440E+02	0.000E+00	2.410E+02	0.000E+00	1.480E+06	0.000E+00	1.310E+02
MO-99	0.000E+00	8.020E+01	0.000E+00	1.820E+02	0.000E+00	1.860E+02	0.000E+00	1.530E+01
TC-99M	5.590E-04	1.580E-03	0.000E+00	2.400E-02	7.740E-04	9.340E-01	0.000E+00	2.010E-02
TC-101	2.610E-33	3.760E-33	0.000E+00	6.770E-32	1.920E-33	1.130E-44	0.000E+00	3.690E-32
RU-103	4.350E+00	0.000E+00	0.000E+00	1.660E+01	0.000E+00	5.080E+02	0.000E+00	1.870E+00
RU-105	8.670E-03	0.000E+00	0.000E+00	1.120E-01	0.000E+00	5.300E+00	0.000E+00	3.420E-03
RU-106	6.570E+01	0.000E+00	0.000E+00	1.270E+02	0.000E+00	4.250E+03	0.000E+00	8.320E+00
AG-110M	8.790E-01	8.130E-01	0.000E+00	1.600E+00	0.000E+00	3.320E+02	0.000E+00	4.830E-01
TE-125M	2.540E+03	9.190E+02	7.630E+02	1.030E+04	0.000E+00	1.010E+04	0.000E+00	3.400E+02
TE-127	1.790E+01	6.440E+00	1.330E+01	7.300E+01	0.000E+00	1.410E+03	0.000E+00	3.880E+00
TE-127M	6.440E+03	2.300E+03	1.650E+03	2.620E+04	0.000E+00	2.160E+04	0.000E+00	7.850E+02
TE-129	1.630E-05	6.120E-06	1.250E-05	6.850E-05	0.000E+00	1.230E-05	0.000E+00	3.970E-06
TE-129M	1.080E+04	4.020E+03	3.710E+03	4.500E+04	0.000E+00	5.430E+04	0.000E+00	1.710E+03
TE-131	8.710E-17	3.640E-17	7.160E-17	3.820E-16	0.000E+00	1.230E-17	0.000E+00	2.750E-17
TE-131M	9.510E+02	4.650E+02	7.370E+02	4.710E+03	0.000E+00	4.620E+04	0.000E+00	3.880E+02
TE-132	1.950E+03	1.260E+03	1.390E+03	1.210E+04	0.000E+00	5.960E+04	0.000E+00	1.180E+03
I-130	7.050E+00	2.080E+01	1.760E+03	3.250E+01	0.000E+00	1.790E+01	0.000E+00	8.210E+00

APPENDIX C

A_i Adult Dose Factors for use in the Liquid Dose Calculations

Agegroup:	ADULT	Pathway:	Fresh Water Fish - Sport (FFSP)			Units:	mrem/hr / µCi/ml	
Nuclide	**Bone**	**Liver**	**Thyroid**	**Kidney**	**Lung**	**Gilli**	**Skin**	**Total Body**
I-131	1.370E+02	1.960E+02	6.420E+04	3.360E+02	0.000E+00	5.170E+01	0.000E+00	1.120E+02
I-132	5.270E-03	1.410E-02	4.940E-01	2.250E-02	0.000E+00	2.650E-03	0.000E+00	4.940E-03
I-133	2.290E+01	3.990E+01	5.860E+03	6.950E+01	0.000E+00	3.580E+01	0.000E+00	1.210E+01
I-134	2.120E-08	5.750E-08	9.960E-07	9.140E-08	0.000E+00	5.010E-11	0.000E+00	2.060E-08
I-135	1.290E+00	3.370E+00	2.220E+02	5.410E+00	0.000E+00	3.810E+00	0.000E+00	1.240E+00
CS-134	2.980E+05	7.080E+05	0.000E+00	2.290E+05	7.610E+04	1.240E+04	0.000E+00	5.790E+05
CS-136	2.960E+04	1.170E+05	0.000E+00	6.500E+04	8.900E+03	1.330E+04	0.000E+00	8.400E+04
CS-137	3.820E+05	5.220E+05	0.000E+00	1.770E+05	5.890E+04	1.010E+04	0.000E+00	3.420E+05
CS-138	8.940E-12	1.770E-11	0.000E+00	1.300E-11	1.280E-12	7.530E-17	0.000E+00	8.750E-12
BA-139	5.650E-06	4.030E-09	0.000E+00	3.760E-09	2.280E-09	1.000E-05	0.000E+00	1.660E-07
BA-140	1.840E+02	2.310E-01	0.000E+00	7.860E-02	1.320E-01	3.790E+02	0.000E+00	1.210E+01
BA-141	8.700E-25	6.580E-28	0.000E+00	6.120E-28	3.730E-28	4.100E-34	0.000E+00	2.940E-26
BA-142	2.570E-42	2.640E-45	0.000E+00	2.230E-45	1.490E-45	3.620E-60	0.000E+00	1.610E-43
LA-140	9.900E-02	4.990E-02	0.000E+00	0.000E+00	0.000E+00	3.660E+03	0.000E+00	1.320E-02
LA-142	2.210E-07	1.000E-07	0.000E+00	0.000E+00	0.000E+00	7.330E-04	0.000E+00	2.500E-08
CE-141	2.190E-02	1.480E-02	0.000E+00	6.890E-03	0.000E+00	5.670E+01	0.000E+00	1.680E-03
CE-143	2.380E-03	1.760E+00	0.000E+00	7.760E-04	0.000E+00	6.590E+01	0.000E+00	1.950E-04
CE-144	1.170E+00	4.870E-01	0.000E+00	2.890E-01	0.000E+00	3.940E+02	0.000E+00	6.260E-02
PR-143	5.230E-01	2.100E-01	0.000E+00	1.210E-01	0.000E+00	2.290E+03	0.000E+00	2.590E-02
PR-144	1.550E-28	6.440E-29	0.000E+00	3.630E-29	0.000E+00	2.230E-35	0.000E+00	7.880E-30
ND-147	3.530E-01	4.080E-01	0.000E+00	2.390E-01	0.000E+00	1.960E+03	0.000E+00	2.440E-02
W-187	1.470E+02	1.230E+02	0.000E+00	0.000E+00	0.000E+00	4.030E+04	0.000E+00	4.300E+01
NP-239	2.120E-02	2.090E-03	0.000E+00	6.510E-03	0.000E+00	4.280E+02	0.000E+00	1.150E-03

APPENDIX C

A_i Adult Dose Factors for use in the Liquid Dose Calculations

Agegroup:	ADULT	Pathway:	Shoreline Sediment (SHDp)			Units:	mrem/hr / µCi/ml	
Nuclide	**Bone**	**Liver**	**Thyroid**	**Kidney**	**Lung**	**Gilli**	**Skin**	**Total Body**
H-3	0.000E+00	0.000E+00	0.000E+00	0.000E+00	0.000E+00	0.000E+00	0.000E+00	0.000E+00
C-14	0.000E+00	0.000E+00	0.000E+00	0.000E+00	0.000E+00	0.000E+00	0.000E+00	0.000E+00
NA-24	6.410E-01	6.410E-01	6.410E-01	6.410E-01	6.410E-01	6.410E-01	7.440E-01	6.410E-01
P-32	0.000E+00	0.000E+00	0.000E+00	0.000E+00	0.000E+00	0.000E+00	0.000E+00	0.000E+00
CR-51	2.500E-01	2.500E-01	2.500E-01	2.500E-01	2.500E-01	2.500E-01	2.960E-01	2.500E-01
MN-54	7.440E+01	7.440E+01	7.440E+01	7.440E+01	7.440E+01	7.440E+01	8.720E+01	7.440E+01
MN-56	4.840E-02	4.840E-02	4.840E-02	4.840E-02	4.840E-02	4.840E-02	5.720E-02	4.840E-02
FE-55	0.000E+00	0.000E+00	0.000E+00	0.000E+00	0.000E+00	0.000E+00	0.000E+00	0.000E+00
FE-59	1.460E+01	1.460E+01	1.460E+01	1.460E+01	1.460E+01	1.460E+01	1.720E+01	1.460E+01
CO-58	2.030E+01	2.030E+01	2.030E+01	2.030E+01	2.030E+01	2.030E+01	2.380E+01	2.030E+01
CO-60	1.150E+03	1.150E+03	1.150E+03	1.150E+03	1.150E+03	1.150E+03	1.360E+03	1.150E+03
NI-63	0.000E+00	0.000E+00	0.000E+00	0.000E+00	0.000E+00	0.000E+00	0.000E+00	0.000E+00
NI-65	1.590E-02	1.590E-02	1.590E-02	1.590E-02	1.590E-02	1.590E-02	1.850E-02	1.590E-02
CU-64	3.260E-02	3.260E-02	3.260E-02	3.260E-02	3.260E-02	3.260E-02	3.690E-02	3.260E-02
ZN-65	4.010E+01	4.010E+01	4.010E+01	4.010E+01	4.010E+01	4.010E+01	4.610E+01	4.010E+01
ZN-69	0.000E+00	0.000E+00	0.000E+00	0.000E+00	0.000E+00	0.000E+00	0.000E+00	0.000E+00
BR-83	2.620E-04	2.620E-04	2.620E-04	2.620E-04	2.620E-04	2.620E-04	3.800E-04	2.620E-04
BR-84	1.090E-02	1.090E-02	1.090E-02	1.090E-02	1.090E-02	1.090E-02	1.270E-02	1.090E-02
BR-85	0.000E+00	0.000E+00	0.000E+00	0.000E+00	0.000E+00	0.000E+00	0.000E+00	0.000E+00
RB-86	4.820E-01	4.820E-01	4.820E-01	4.820E-01	4.820E-01	4.820E-01	5.510E-01	4.820E-01
RB-88	1.780E-03	1.780E-03	1.780E-03	1.780E-03	1.780E-03	1.780E-03	2.030E-03	1.780E-03
RB-89	6.600E-03	6.600E-03	6.600E-03	6.600E-03	6.600E-03	6.600E-03	7.920E-03	6.600E-03
SR-89	1.160E-03	1.160E-03	1.160E-03	1.160E-03	1.160E-03	1.160E-03	1.350E-03	1.160E-03
SR-90	0.000E+00	0.000E+00	0.000E+00	0.000E+00	0.000E+00	0.000E+00	0.000E+00	0.000E+00
SR-91	1.150E-01	1.150E-01	1.150E-01	1.150E-01	1.150E-01	1.150E-01	1.350E-01	1.150E-01

APPENDIX C

A_i Adult Dose Factors for use in the Liquid Dose Calculations

Agegroup:	ADULT	Pathway:	Shoreline Sediment (SHDp)			Units:	mrem/hr / µCi/ml	
Nuclide	**Bone**	**Liver**	**Thyroid**	**Kidney**	**Lung**	**Gilli**	**Skin**	**Total Body**
SR-92	4.170E-02	4.170E-02	4.170E-02	4.170E-02	4.170E-02	4.170E-02	4.630E-02	4.170E-02
Y-90	2.410E-04	2.410E-04	2.410E-04	2.410E-04	2.410E-04	2.410E-04	2.850E-04	2.410E-04
Y-91	5.760E-02	5.760E-02	5.760E-02	5.760E-02	5.760E-02	5.760E-02	6.480E-02	5.760E-02
Y-91M	5.380E-03	5.380E-03	5.380E-03	5.380E-03	5.380E-03	5.380E-03	6.230E-03	5.380E-03
Y-92	9.680E-03	9.680E-03	9.680E-03	9.680E-03	9.680E-03	9.680E-03	1.150E-02	9.680E-03
Y-93	9.840E-03	9.840E-03	9.840E-03	9.840E-03	9.840E-03	9.840E-03	1.350E-02	9.840E-03
ZR-95	1.310E+01	1.310E+01	1.310E+01	1.310E+01	1.310E+01	1.310E+01	1.520E+01	1.310E+01
ZR-97	1.590E-01	1.590E-01	1.590E-01	1.590E-01	1.590E-01	1.590E-01	1.850E-01	1.590E-01
NB-95	7.340E+00	7.340E+00	7.340E+00	7.340E+00	7.340E+00	7.340E+00	8.630E+00	7.340E+00
MO-99	2.140E-01	2.140E-01	2.140E-01	2.140E-01	2.140E-01	2.140E-01	2.480E-01	2.140E-01
TC-99M	9.880E-03	9.880E-03	9.880E-03	9.880E-03	9.880E-03	9.880E-03	1.130E-02	9.880E-03
TC-101	1.090E-03	1.090E-03	1.090E-03	1.090E-03	1.090E-03	1.090E-03	1.210E-03	1.090E-03
RU-103	5.810E+00	5.810E+00	5.810E+00	5.810E+00	5.810E+00	5.810E+00	6.780E+00	5.810E+00
RU-105	3.420E-02	3.420E-02	3.420E-02	3.420E-02	3.420E-02	3.420E-02	3.870E-02	3.420E-02
RU-106	2.270E+01	2.270E+01	2.270E+01	2.270E+01	2.270E+01	2.270E+01	2.720E+01	2.270E+01
AG-110M	1.850E+02	1.850E+02	1.850E+02	1.850E+02	1.850E+02	1.850E+02	2.150E+02	1.850E+02
TE-125M	8.330E-02	8.330E-02	8.330E-02	8.330E-02	8.330E-02	8.330E-02	1.140E-01	8.330E-02
TE-127	1.600E-04	1.600E-04	1.600E-04	1.600E-04	1.600E-04	1.600E-04	1.760E-04	1.600E-04
TE-127M	4.920E-03	4.920E-03	4.920E-03	4.920E-03	4.920E-03	4.920E-03	5.810E-03	4.920E-03
TE-129	1.410E-03	1.410E-03	1.410E-03	1.410E-03	1.410E-03	1.410E-03	1.670E-03	1.410E-03
TE-129M	1.060E+00	1.060E+00	1.060E+00	1.060E+00	1.060E+00	1.060E+00	1.240E+00	1.060E+00
TE-131	1.570E-03	1.570E-03	1.570E-03	1.570E-03	1.570E-03	1.570E-03	1.850E+00	1.570E-03
TE-131M	4.310E-01	4.310E-01	4.310E-01	4.310E-01	4.310E-01	4.310E-01	5.080E-01	4.310E-01
TE-132	2.270E-01	2.270E-01	2.270E-01	2.270E-01	2.270E-01	2.270E-01	2.670E-01	2.270E-01
I-130	2.960E-01	2.960E-01	2.960E-01	2.960E-01	2.960E-01	2.960E-01	3.590E-01	2.960E-01

APPENDIX C

A_i Adult Dose Factors for use in the Liquid Dose Calculations

Agegroup:	ADULT	Pathway:	Shoreline Sediment (SHDp)			Units:	mrem/hr / µCi/ml	
Nuclide	**Bone**	**Liver**	**Thyroid**	**Kidney**	**Lung**	**Gilli**	**Skin**	**Total Body**
I-131	9.240E-01	9.240E-01	9.240E-01	9.240E-01	9.240E-01	9.240E-01	1.120E+00	9.240E-01
I-132	6.680E-02	6.680E-02	6.680E-02	6.680E-02	6.680E-02	6.680E-02	7.860E-02	6.680E-02
I-133	1.320E-01	1.320E-01	1.320E-01	1.320E-01	1.320E-01	1.320E-01	1.600E-01	1.320E-01
I-134	2.400E-02	2.400E-02	2.400E-02	2.400E-02	2.400E-02	2.400E-02	2.850E-02	2.400E-02
I-135	1.360E-01	1.360E-01	1.360E-01	1.360E-01	1.360E-01	1.360E-01	1.580E-01	1.360E-01
CS-134	3.680E+02	3.680E+02	3.680E+02	3.680E+02	3.680E+02	3.680E+02	4.300E+02	3.680E+02
CS-136	8.100E+00	8.100E+00	8.100E+00	8.100E+00	8.100E+00	8.100E+00	9.180E+00	8.100E+00
CS-137	5.520E+02	5.520E+02	5.520E+02	5.520E+02	5.520E+02	5.520E+02	6.440E+02	5.520E+02
CS-138	1.930E-02	1.930E-02	1.930E-02	1.930E-02	1.930E-02	1.930E-02	2.200E-02	1.930E-02
BA-139	5.680E-03	5.680E-03	5.680E-03	5.680E-03	5.680E-03	5.680E-03	6.390E-03	5.680E-03
BA-140	1.100E+00	1.100E+00	1.100E+00	1.100E+00	1.100E+00	1.100E+00	1.260E+00	1.100E+00
BA-141	2.240E-03	2.240E-03	2.240E-03	2.240E-03	2.240E-03	2.240E-03	2.550E-03	2.240E-03
BA-142	2.410E-03	2.410E-03	2.410E-03	2.410E-03	2.410E-03	2.410E-03	2.740E-03	2.410E-03
LA-140	1.030E+00	1.030E+00	1.030E+00	1.030E+00	1.030E+00	1.030E+00	1.170E+00	1.030E+00
LA-142	4.080E-02	4.080E-02	4.080E-02	4.080E-02	4.080E-02	4.080E-02	4.890E-02	4.080E-02
CE-141	7.330E-01	7.330E-01	7.330E-01	7.330E-01	7.330E-01	7.330E-01	8.270E-01	7.330E-01
CE-143	1.240E-01	1.240E-01	1.240E-01	1.240E-01	1.240E-01	1.240E-01	1.410E-01	1.240E-01
CE-144	3.730E+00	3.730E+00	3.730E+00	3.730E+00	3.730E+00	3.730E+00	4.320E+00	3.730E+00
PR-143	0.000E+00	0.000E+00	0.000E+00	0.000E+00	0.000E+00	0.000E+00	0.000E+00	0.000E+00
PR-144	9.850E-05	9.850E-05	9.850E-05	9.850E-05	9.850E-05	9.850E-05	1.130E-04	9.850E-05
ND-147	4.510E-01	4.510E-01	4.510E-01	4.510E-01	4.510E-01	4.510E-01	5.410E-01	4.510E-01
W-187	1.260E-01	1.260E-01	1.260E-01	1.260E-01	1.260E-01	1.260E-01	1.470E-01	1.260E-01
NP-239	9.180E-02	9.180E-02	9.180E-02	9.180E-02	9.180E-02	9.180E-02	1.060E-01	9.180E-02

APPENDIX D

A_i Teen Factors for use in the Liquid Dose Calculations

Agegroup:	TEEN	Pathway:	Potable Water (PWtr)			Units:	mrem/hr / µCi/ml	
Nuclide	**Bone**	**Liver**	**Thyroid**	**Kidney**	**Lung**	**Gilli**	**Skin**	**Total Body**
H-3	0.000E+00	6.160E+00	6.160E+00	6.160E+00	6.160E+00	6.160E+00	0.000E+00	6.160E+00
C-14	2.360E+02	4.720E+01	4.720E+01	4.720E+01	4.720E+01	4.720E+01	0.000E+00	4.720E+01
NA-24	7.690E+01	7.690E+01	7.690E+01	7.690E+01	7.690E+01	7.690E+01	0.000E+00	7.690E+01
P-32	1.570E+04	9.700E+02	0.000E+00	0.000E+00	0.000E+00	1.320E+03	0.000E+00	6.070E+02
CR-51	0.000E+00	0.000E+00	1.150E-01	4.530E-02	2.950E-01	3.470E+01	0.000E+00	2.070E-01
MN-54	0.000E+00	3.430E+02	0.000E+00	1.020E+02	0.000E+00	7.030E+02	0.000E+00	6.790E+01
MN-56	0.000E+00	3.640E-01	0.000E+00	4.610E-01	0.000E+00	2.400E+01	0.000E+00	6.480E-02
FE-55	2.200E+02	1.560E+02	0.000E+00	0.000E+00	9.880E+01	6.740E+01	0.000E+00	3.630E+01
FE-59	3.390E+02	7.900E+02	0.000E+00	0.000E+00	2.490E+02	1.870E+03	0.000E+00	3.050E+02
CO-58	0.000E+00	5.620E+01	0.000E+00	0.000E+00	0.000E+00	7.750E+02	0.000E+00	1.300E+02
CO-60	0.000E+00	1.630E+02	0.000E+00	0.000E+00	0.000E+00	2.130E+03	0.000E+00	3.680E+02
NI-63	1.030E+04	7.270E+02	0.000E+00	0.000E+00	0.000E+00	1.160E+02	0.000E+00	3.490E+02
NI-65	1.610E+00	2.050E-01	0.000E+00	0.000E+00	0.000E+00	1.110E+01	0.000E+00	9.350E-02
CU-64	0.000E+00	3.470E+00	0.000E+00	8.770E+00	0.000E+00	2.690E+02	0.000E+00	1.630E+00
ZN-65	3.340E+02	1.160E+03	0.000E+00	7.430E+02	0.000E+00	4.920E+02	0.000E+00	5.420E+02
ZN-69	1.070E-04	2.040E-04	0.000E+00	1.330E-04	0.000E+00	3.760E-04	0.000E+00	1.430E-05
BR-83	0.000E+00	0.000E+00	0.000E+00	0.000E+00	0.000E+00	0.000E+00	0.000E+00	1.030E-01
BR-84	0.000E+00	0.000E+00	0.000E+00	0.000E+00	0.000E+00	0.000E+00	0.000E+00	6.500E-07
BR-85	0.000E+00	0.000E+00	0.000E+00	0.000E+00	0.000E+00	0.000E+00	0.000E+00	4.360E-77
RB-86	0.000E+00	1.700E+03	0.000E+00	0.000E+00	0.000E+00	2.520E+02	0.000E+00	7.990E+02
RB-88	0.000E+00	3.300E-12	0.000E+00	0.000E+00	0.000E+00	2.830E-19	0.000E+00	1.760E-12
RB-89	0.000E+00	2.960E-14	0.000E+00	0.000E+00	0.000E+00	4.540E-23	0.000E+00	2.090E-14
SR-89	2.540E+04	0.000E+00	0.000E+00	0.000E+00	0.000E+00	3.030E+03	0.000E+00	7.280E+02
SR-90	4.830E+05	0.000E+00	0.000E+00	0.000E+00	0.000E+00	1.350E+04	0.000E+00	1.190E+05
SR-91	1.950E+02	0.000E+00	0.000E+00	0.000E+00	0.000E+00	8.850E+02	0.000E+00	7.760E+00

APPENDIX D

A_i Teen Factors for use in the Liquid Dose Calculations

Agegroup:	TEEN	Pathway:	Potable Water (PWtr)			Units:	mrem/hr / µCi/ml	
Nuclide	**Bone**	**Liver**	**Thyroid**	**Kidney**	**Lung**	**Gilli**	**Skin**	**Total Body**
SR-92	8.220E+00	0.000E+00	0.000E+00	0.000E+00	0.000E+00	2.090E+02	0.000E+00	3.500E-01
Y-90	7.000E-01	0.000E+00	0.000E+00	0.000E+00	0.000E+00	5.770E+03	0.000E+00	1.880E-02
Y-91	1.160E+01	0.000E+00	0.000E+00	0.000E+00	0.000E+00	4.760E+03	0.000E+00	3.120E-01
Y-91M	3.330E-07	0.000E+00	0.000E+00	0.000E+00	0.000E+00	1.570E-05	0.000E+00	1.270E-08
Y-92	6.710E-03	0.000E+00	0.000E+00	0.000E+00	0.000E+00	1.840E+02	0.000E+00	1.940E-04
Y-93	9.760E-02	0.000E+00	0.000E+00	0.000E+00	0.000E+00	2.980E+03	0.000E+00	2.670E-03
ZR-95	2.380E+00	7.520E-01	0.000E+00	1.100E+00	0.000E+00	1.730E+03	0.000E+00	5.170E-01
ZR-97	8.420E-02	1.670E-02	0.000E+00	2.530E-02	0.000E+00	4.510E+03	0.000E+00	7.670E-03
NB-95	4.730E-01	2.630E-01	0.000E+00	2.540E-01	0.000E+00	1.120E+03	0.000E+00	1.440E-01
MO-99	0.000E+00	3.090E+02	0.000E+00	7.070E+02	0.000E+00	5.530E+02	0.000E+00	5.890E+01
TC-99M	4.840E-03	1.350E-02	0.000E+00	2.010E-01	7.500E-03	8.870E+00	0.000E+00	1.750E-01
TC-101	1.120E-17	1.590E-17	0.000E+00	2.880E-16	9.700E-18	2.720E-24	0.000E+00	1.560E-16
RU-103	1.470E+01	0.000E+00	0.000E+00	5.180E+01	0.000E+00	1.230E+03	0.000E+00	6.280E+00
RU-105	1.940E-01	0.000E+00	0.000E+00	2.450E+00	0.000E+00	1.570E+02	0.000E+00	7.540E-02
RU-106	2.280E+02	0.000E+00	0.000E+00	4.390E+02	0.000E+00	1.090E+04	0.000E+00	2.870E+01
AG-110M	1.190E+01	1.130E+01	0.000E+00	2.150E+01	0.000E+00	3.160E+03	0.000E+00	6.850E+00
TE-125M	2.210E+02	7.980E+01	6.180E+01	0.000E+00	0.000E+00	6.530E+02	0.000E+00	2.960E+01
TE-127	3.790E+00	1.340E+00	2.610E+00	1.530E+01	0.000E+00	2.930E+02	0.000E+00	8.150E-01
TE-127M	5.600E+02	1.990E+02	1.330E+02	2.270E+03	0.000E+00	1.400E+03	0.000E+00	6.660E+01
TE-129	1.920E-03	7.150E-04	1.370E-03	8.040E-03	0.000E+00	1.050E-02	0.000E+00	4.660E-04
TE-129M	9.380E+02	3.480E+02	3.030E+02	3.920E+03	0.000E+00	3.520E+03	0.000E+00	1.480E+02
TE-131	3.490E-09	1.440E-09	2.690E-09	1.520E-08	0.000E+00	2.860E-10	0.000E+00	1.090E-09
TE-131M	1.080E+02	5.150E+01	7.750E+01	5.380E+02	0.000E+00	4.140E+03	0.000E+00	4.300E+01
TE-132	1.820E+02	1.150E+02	1.220E+02	1.110E+03	0.000E+00	3.660E+03	0.000E+00	1.090E+02
I-130	3.050E+01	8.830E+01	7.200E+03	1.360E+02	0.000E+00	6.790E+01	0.000E+00	3.530E+01

APPENDIX D

A_i Teen Factors for use in the Liquid Dose Calculations

Agegroup:	TEEN	Pathway:	Potable Water (PWtr)			Units:	mrem/hr / µCi/ml	
Nuclide	**Bone**	**Liver**	**Thyroid**	**Kidney**	**Lung**	**Gilli**	**Skin**	**Total Body**
I-131	3.260E+02	4.560E+02	1.330E+05	7.850E+02	0.000E+00	9.020E+01	0.000E+00	2.450E+02
I-132	4.360E-01	1.140E+00	3.850E+01	1.800E+00	0.000E+00	4.970E-01	0.000E+00	4.100E-01
I-133	7.830E+01	1.330E+02	1.860E+04	2.330E+02	0.000E+00	1.010E+02	0.000E+00	4.050E+01
I-134	6.330E-04	1.680E-03	2.800E-02	2.640E-03	0.000E+00	2.210E-05	0.000E+00	6.020E-04
I-135	1.010E+01	2.600E+01	1.670E+03	4.100E+01	0.000E+00	2.880E+01	0.000E+00	9.630E+00
CS-134	4.860E+03	1.140E+04	0.000E+00	3.640E+03	1.390E+03	1.420E+02	0.000E+00	5.310E+03
CS-136	4.860E+02	1.910E+03	0.000E+00	1.040E+03	1.640E+02	1.540E+02	0.000E+00	1.290E+03
CS-137	6.510E+03	8.660E+03	0.000E+00	2.950E+03	1.150E+03	1.230E+02	0.000E+00	3.020E+03
CS-138	8.300E-07	1.590E-06	0.000E+00	1.180E-06	1.370E-07	7.230E-10	0.000E+00	7.970E-07
BA-139	1.990E-02	1.400E-05	0.000E+00	1.320E-05	9.670E-06	1.780E-01	0.000E+00	5.810E-04
BA-140	1.610E+03	1.970E+00	0.000E+00	6.680E-01	1.320E+00	2.480E+03	0.000E+00	1.040E+02
BA-141	5.420E-12	4.050E-15	0.000E+00	3.760E-15	2.770E-15	1.150E-17	0.000E+00	1.810E-13
BA-142	6.170E-21	6.170E-24	0.000E+00	5.220E-24	4.100E-24	1.890E-32	0.000E+00	3.800E-22
LA-140	1.650E-01	8.090E-02	0.000E+00	0.000E+00	0.000E+00	4.640E+03	0.000E+00	2.150E-02
LA-142	5.590E-05	2.480E-05	0.000E+00	0.000E+00	0.000E+00	7.550E-01	0.000E+00	6.180E-06
CE-141	7.650E-01	5.110E-01	0.000E+00	2.400E-01	0.000E+00	1.460E+03	0.000E+00	5.870E-02
CE-143	1.060E-01	7.730E+01	0.000E+00	3.460E-02	0.000E+00	2.320E+03	0.000E+00	8.630E-03
CE-144	4.040E+01	1.670E+01	0.000E+00	9.990E+00	0.000E+00	1.020E+04	0.000E+00	2.170E+00
PR-143	7.420E-01	2.960E-01	0.000E+00	1.720E-01	0.000E+00	2.440E+03	0.000E+00	3.700E-02
PR-144	7.330E-16	3.000E-16	0.000E+00	1.720E-16	0.000E+00	8.080E-19	0.000E+00	3.720E-17
ND-147	5.280E-01	5.750E-01	0.000E+00	3.370E-01	0.000E+00	2.070E+03	0.000E+00	3.440E-02
W-187	5.990E+00	4.880E+00	0.000E+00	0.000E+00	0.000E+00	1.320E+03	0.000E+00	1.710E+00
NP-239	8.830E-02	8.330E-03	0.000E+00	2.610E-02	0.000E+00	1.340E+03	0.000E+00	4.630E-03

APPENDIX D

A_i Teen Dose Factors for use in the Liquid Dose Calculations

Agegroup:	TEEN	Pathway:	Fresh Water Fish - Sport (FFSP)			Units:	mrem/hr / µCi/ml	
Nuclide	**Bone**	**Liver**	**Thyroid**	**Kidney**	**Lung**	**Gilli**	**Skin**	**Total Body**
H-3	0.000E+00	1.740E-01	1.740E-01	1.740E-01	1.740E-01	1.740E-01	0.000E+00	1.740E-01
C-14	3.410E+04	6.810E+03	6.810E+03	6.810E+03	6.810E+03	6.810E+03	0.000E+00	6.810E+03
NA-24	1.390E+02	1.390E+02	1.390E+02	1.390E+02	1.390E+02	1.390E+02	0.000E+00	1.390E+02
P-32	1.440E+06	8.910E+04	0.000E+00	0.000E+00	0.000E+00	1.210E+05	0.000E+00	5.580E+04
CR-51	0.000E+00	0.000E+00	7.120E-01	2.810E-01	1.830E+00	2.150E+02	0.000E+00	1.280E+00
MN-54	0.000E+00	4.300E+03	0.000E+00	1.280E+03	0.000E+00	8.810E+03	0.000E+00	8.520E+02
MN-56	0.000E+00	1.810E-01	0.000E+00	2.300E-01	0.000E+00	1.190E+01	0.000E+00	3.230E-02
FE-55	6.890E+02	4.880E+02	0.000E+00	0.000E+00	3.100E+02	2.110E+02	0.000E+00	1.140E+02
FE-59	1.050E+03	2.460E+03	0.000E+00	0.000E+00	7.760E+02	5.820E+03	0.000E+00	9.500E+02
CO-58	0.000E+00	8.780E+01	0.000E+00	0.000E+00	0.000E+00	1.210E+03	0.000E+00	2.020E+02
CO-60	0.000E+00	2.560E+02	0.000E+00	0.000E+00	0.000E+00	3.340E+03	0.000E+00	5.770E+02
NI-63	3.230E+04	2.280E+03	0.000E+00	0.000E+00	0.000E+00	3.630E+02	0.000E+00	1.090E+03
NI-65	1.860E-01	2.370E-02	0.000E+00	0.000E+00	0.000E+00	1.290E+00	0.000E+00	1.080E-02
CU-64	0.000E+00	2.820E+00	0.000E+00	7.140E+00	0.000E+00	2.190E+02	0.000E+00	1.330E+00
ZN-65	2.100E+04	7.280E+04	0.000E+00	4.660E+04	0.000E+00	3.080E+04	0.000E+00	3.390E+04
ZN-69	8.410E-07	1.600E-06	0.000E+00	1.050E-06	0.000E+00	2.950E-06	0.000E+00	1.120E-07
BR-83	0.000E+00	0.000E+00	0.000E+00	0.000E+00	0.000E+00	0.000E+00	0.000E+00	4.160E-02
BR-84	0.000E+00	0.000E+00	0.000E+00	0.000E+00	0.000E+00	0.000E+00	0.000E+00	1.320E-12
BR-85	0.000E+00	0.000E+00	0.000E+00	0.000E+00	0.000E+00	0.000E+00	0.000E+00	0.000E+00
RB-86	0.000E+00	1.050E+05	0.000E+00	0.000E+00	0.000E+00	1.550E+04	0.000E+00	4.920E+04
RB-88	0.000E+00	1.380E-22	0.000E+00	0.000E+00	0.000E+00	1.180E-29	0.000E+00	7.360E-23
RB-89	0.000E+00	1.720E-26	0.000E+00	0.000E+00	0.000E+00	2.630E-35	0.000E+00	1.220E-26
SR-89	2.370E+04	0.000E+00	0.000E+00	0.000E+00	0.000E+00	2.830E+03	0.000E+00	6.800E+02
SR-90	4.540E+05	0.000E+00	0.000E+00	0.000E+00	0.000E+00	1.270E+04	0.000E+00	1.120E+05
SR-91	7.640E+01	0.000E+00	0.000E+00	0.000E+00	0.000E+00	3.470E+02	0.000E+00	3.040E+00

APPENDIX D

A_i Teen Dose Factors for use in the Liquid Dose Calculations

Agegroup:	TEEN	Pathway:	Fresh Water Fish - Sport (FFSP)			Units:	mrem/hr / µCi/ml	
Nuclide	**Bone**	**Liver**	**Thyroid**	**Kidney**	**Lung**	**Gilli**	**Skin**	**Total Body**
SR-92	3.590E-01	0.000E+00	0.000E+00	0.000E+00	0.000E+00	9.130E+00	0.000E+00	1.530E-02
Y-90	4.820E-01	0.000E+00	0.000E+00	0.000E+00	0.000E+00	3.980E+03	0.000E+00	1.300E-02
Y-91	9.060E+00	0.000E+00	0.000E+00	0.000E+00	0.000E+00	3.710E+03	0.000E+00	2.430E-01
Y-91M	1.160E-11	0.000E+00	0.000E+00	0.000E+00	0.000E+00	5.470E-10	0.000E+00	4.430E-13
Y-92	5.020E-04	0.000E+00	0.000E+00	0.000E+00	0.000E+00	1.380E+01	0.000E+00	1.450E-05
Y-93	3.350E-02	0.000E+00	0.000E+00	0.000E+00	0.000E+00	1.020E+03	0.000E+00	9.190E-04
ZR-95	2.450E-01	7.740E-02	0.000E+00	1.140E-01	0.000E+00	1.790E+02	0.000E+00	5.320E-02
ZR-97	5.330E-03	1.050E-03	0.000E+00	1.600E-03	0.000E+00	2.850E+02	0.000E+00	4.860E-04
NB-95	4.410E+02	2.450E+02	0.000E+00	2.370E+02	0.000E+00	1.050E+06	0.000E+00	1.350E+02
MO-99	0.000E+00	8.550E+01	0.000E+00	1.960E+02	0.000E+00	1.530E+02	0.000E+00	1.630E+01
TC-99M	5.720E-04	1.600E-03	0.000E+00	2.380E-02	8.860E-04	1.050E+00	0.000E+00	2.070E-02
TC-101	2.820E-33	4.010E-33	0.000E+00	7.240E-32	2.440E-33	6.840E-40	0.000E+00	3.930E-32
RU-103	4.570E+00	0.000E+00	0.000E+00	1.610E+01	0.000E+00	3.820E+02	0.000E+00	1.950E+00
RU-105	9.350E-03	0.000E+00	0.000E+00	1.180E-01	0.000E+00	7.550E+00	0.000E+00	3.630E-03
RU-106	7.140E+01	0.000E+00	0.000E+00	1.380E+02	0.000E+00	3.420E+03	0.000E+00	8.990E+00
AG-110M	8.580E-01	8.120E-01	0.000E+00	1.550E+00	0.000E+00	2.280E+02	0.000E+00	4.940E-01
TE-125M	2.760E+03	9.950E+02	7.710E+02	0.000E+00	0.000E+00	8.150E+03	0.000E+00	3.690E+02
TE-127	1.960E+01	6.950E+00	1.350E+01	7.940E+01	0.000E+00	1.510E+03	0.000E+00	4.220E+00
TE-127M	7.010E+03	2.490E+03	1.670E+03	2.840E+04	0.000E+00	1.750E+04	0.000E+00	8.340E+02
TE-129	1.770E-05	6.600E-06	1.260E-05	7.430E-05	0.000E+00	9.680E-05	0.000E+00	4.310E-06
TE-129M	1.160E+04	4.320E+03	3.760E+03	4.870E+04	0.000E+00	4.370E+04	0.000E+00	1.840E+03
TE-131	9.400E-17	3.870E-17	7.240E-17	4.110E-16	0.000E+00	7.710E-18	0.000E+00	2.940E-17
TE-131M	1.020E+03	4.900E+02	7.370E+02	5.110E+03	0.000E+00	3.930E+04	0.000E+00	4.090E+02
TE-132	2.060E+03	1.300E+03	1.370E+03	1.250E+04	0.000E+00	4.130E+04	0.000E+00	1.230E+03
I-130	7.320E+00	2.120E+01	1.730E+03	3.260E+01	0.000E+00	1.630E+01	0.000E+00	8.460E+00

APPENDIX D

A_i Teen Dose Factors for use in the Liquid Dose Calculations

Agegroup:	TEEN	Pathway:	Fresh Water Fish - Sport (FFSP)			Units:	mrem/hr / µCi/ml	
Nuclide	**Bone**	**Liver**	**Thyroid**	**Kidney**	**Lung**	**Gilli**	**Skin**	**Total Body**
I-131	1.470E+02	2.060E+02	6.000E+04	3.540E+02	0.000E+00	4.070E+01	0.000E+00	1.100E+02
I-132	5.520E-03	1.440E-02	4.870E-01	2.280E-02	0.000E+00	6.290E-03	0.000E+00	5.180E-03
I-133	2.470E+01	4.190E+01	5.850E+03	7.350E+01	0.000E+00	3.170E+01	0.000E+00	1.280E+01
I-134	2.220E-08	5.890E-08	9.810E-07	9.280E-08	0.000E+00	7.760E-10	0.000E+00	2.110E-08
I-135	1.350E+00	3.480E+00	2.240E+02	5.490E+00	0.000E+00	3.850E+00	0.000E+00	1.290E+00
CS-134	3.050E+05	7.180E+05	0.000E+00	2.280E+05	8.710E+04	8.930E+03	0.000E+00	3.330E+05
CS-136	2.970E+04	1.170E+05	0.000E+00	6.370E+04	1.000E+04	9.410E+03	0.000E+00	7.860E+04
CS-137	4.090E+05	5.440E+05	0.000E+00	1.850E+05	7.190E+04	7.730E+03	0.000E+00	1.890E+05
CS-138	9.580E-12	1.840E-11	0.000E+00	1.360E-11	1.580E-12	8.340E-15	0.000E+00	9.190E-12
BA-139	6.170E-06	4.340E-09	0.000E+00	4.090E-09	2.990E-09	5.510E-05	0.000E+00	1.800E-07
BA-140	1.960E+02	2.410E-01	0.000E+00	8.160E-02	1.620E-01	3.030E+02	0.000E+00	1.260E+01
BA-141	9.450E-25	7.050E-28	0.000E+00	6.550E-28	4.830E-28	2.010E-30	0.000E+00	3.150E-26
BA-142	2.750E-42	2.750E-45	0.000E+00	2.320E-45	1.830E-45	8.430E-54	0.000E+00	1.690E-43
LA-140	1.050E-01	5.160E-02	0.000E+00	0.000E+00	0.000E+00	2.960E+03	0.000E+00	1.370E-02
LA-142	2.350E-07	1.040E-07	0.000E+00	0.000E+00	0.000E+00	3.180E-03	0.000E+00	2.600E-08
CE-141	2.370E-02	1.590E-02	0.000E+00	7.460E-03	0.000E+00	4.540E+01	0.000E+00	1.820E-03
CE-143	2.590E-03	1.880E+00	0.000E+00	8.450E-04	0.000E+00	5.660E+01	0.000E+00	2.100E-04
CE-144	1.270E+00	5.240E-01	0.000E+00	3.130E-01	0.000E+00	3.180E+02	0.000E+00	6.810E-02
PR-143	5.680E-01	2.270E-01	0.000E+00	1.320E-01	0.000E+00	1.870E+03	0.000E+00	2.830E-02
PR-144	1.690E-28	6.900E-29	0.000E+00	3.960E-29	0.000E+00	1.860E-31	0.000E+00	8.550E-30
ND-147	4.020E-01	4.370E-01	0.000E+00	2.560E-01	0.000E+00	1.580E+03	0.000E+00	2.620E-02
W-187	1.590E+02	1.300E+02	0.000E+00	0.000E+00	0.000E+00	3.510E+04	0.000E+00	4.540E+01
NP-239	2.390E-02	2.260E-03	0.000E+00	7.080E-03	0.000E+00	3.630E+02	0.000E+00	1.250E-03

APPENDIX D

A_i Teen Dose Factors for use in the Liquid Dose Calculations

Agegroup:	TEEN	Pathway:	Shoreline Sediment (SHDp)			Units:	mrem/hr / µCi/ml	
Nuclide	**Bone**	**Liver**	**Thyroid**	**Kidney**	**Lung**	**Gilli**	**Skin**	**Total Body**
H-3	0.000E+00	0.000E+00	0.000E+00	0.000E+00	0.000E+00	0.000E+00	0.000E+00	0.000E+00
C-14	0.000E+00	0.000E+00	0.000E+00	0.000E+00	0.000E+00	0.000E+00	0.000E+00	0.000E+00
NA-24	3.580E+00	3.580E+00	3.580E+00	3.580E+00	3.580E+00	3.580E+00	4.150E+00	3.580E+00
P-32	0.000E+00	0.000E+00	0.000E+00	0.000E+00	0.000E+00	0.000E+00	0.000E+00	0.000E+00
CR-51	1.400E+00	1.400E+00	1.400E+00	1.400E+00	1.400E+00	1.400E+00	1.650E+00	1.400E+00
MN-54	4.150E+02	4.150E+02	4.150E+02	4.150E+02	4.150E+02	4.150E+02	4.870E+02	4.150E+02
MN-56	2.700E-01	2.700E-01	2.700E-01	2.700E-01	2.700E-01	2.700E-01	3.200E-01	2.700E-01
FE-55	0.000E+00	0.000E+00	0.000E+00	0.000E+00	0.000E+00	0.000E+00	0.000E+00	0.000E+00
FE-59	8.180E+01	8.180E+01	8.180E+01	8.180E+01	8.180E+01	8.180E+01	9.610E+01	8.180E+01
CO-58	1.140E+02	1.140E+02	1.140E+02	1.140E+02	1.140E+02	1.140E+02	1.330E+02	1.140E+02
CO-60	6.440E+03	6.440E+03	6.440E+03	6.440E+03	6.440E+03	6.440E+03	7.580E+03	6.440E+03
NI-63	0.000E+00	0.000E+00	0.000E+00	0.000E+00	0.000E+00	0.000E+00	0.000E+00	0.000E+00
NI-65	8.900E-02	8.900E-02	8.900E-02	8.900E-02	8.900E-02	8.900E-02	1.030E-01	8.900E-02
CU-64	1.820E-01	1.820E-01	1.820E-01	1.820E-01	1.820E-01	1.820E-01	2.060E-01	1.820E-01
ZN-65	2.240E+02	2.240E+02	2.240E+02	2.240E+02	2.240E+02	2.240E+02	2.580E+02	2.240E+02
ZN-69	0.000E+00	0.000E+00	0.000E+00	0.000E+00	0.000E+00	0.000E+00	0.000E+00	0.000E+00
BR-83	1.460E-03	1.460E-03	1.460E-03	1.460E-03	1.460E-03	1.460E-03	2.120E-03	1.460E-03
BR-84	6.070E-02	6.070E-02	6.070E-02	6.070E-02	6.070E-02	6.070E-02	7.080E-02	6.070E-02
BR-85	0.000E+00	0.000E+00	0.000E+00	0.000E+00	0.000E+00	0.000E+00	0.000E+00	0.000E+00
RB-86	2.690E+00	2.690E+00	2.690E+00	2.690E+00	2.690E+00	2.690E+00	3.080E+00	2.690E+00
RB-88	9.910E-03	9.910E-03	9.910E-03	9.910E-03	9.910E-03	9.910E-03	1.130E-02	9.910E-03
RB-89	3.680E-02	3.680E-02	3.680E-02	3.680E-02	3.680E-02	3.680E-02	4.420E-02	3.680E-02
SR-89	6.490E-03	6.490E-03	6.490E-03	6.490E-03	6.490E-03	6.490E-03	7.530E-03	6.490E-03
SR-90	0.000E+00	0.000E+00	0.000E+00	0.000E+00	0.000E+00	0.000E+00	0.000E+00	0.000E+00
SR-91	6.440E-01	6.440E-01	6.440E-01	6.440E-01	6.440E-01	6.440E-01	7.530E-01	6.440E-01

APPENDIX D

A_i Teen Dose Factors for use in the Liquid Dose Calculations

Agegroup:	TEEN	Pathway:	Shoreline Sediment (SHDp)			Units:	mrem/hr / µCi/ml	
Nuclide	**Bone**	**Liver**	**Thyroid**	**Kidney**	**Lung**	**Gilli**	**Skin**	**Total Body**
SR-92	2.330E-01	2.330E-01	2.330E-01	2.330E-01	2.330E-01	2.330E-01	2.590E-01	2.330E-01
Y-90	1.350E-03	1.350E-03	1.350E-03	1.350E-03	1.350E-03	1.350E-03	1.590E-03	1.350E-03
Y-91	3.220E-01	3.220E-01	3.220E-01	3.220E-01	3.220E-01	3.220E-01	3.620E-01	3.220E-01
Y-91M	3.010E-02	3.010E-02	3.010E-02	3.010E-02	3.010E-02	3.010E-02	3.480E-02	3.010E-02
Y-92	5.410E-02	5.410E-02	5.410E-02	5.410E-02	5.410E-02	5.410E-02	6.420E-02	5.410E-02
Y-93	5.500E-02	5.500E-02	5.500E-02	5.500E-02	5.500E-02	5.500E-02	7.520E-02	5.500E-02
ZR-95	7.330E+01	7.330E+01	7.330E+01	7.330E+01	7.330E+01	7.330E+01	8.510E+01	7.330E+01
ZR-97	8.870E-01	8.870E-01	8.870E-01	8.870E-01	8.870E-01	8.870E-01	1.030E+00	8.870E-01
NB-95	4.100E+01	4.100E+01	4.100E+01	4.100E+01	4.100E+01	4.100E+01	4.820E+01	4.100E+01
MO-99	1.200E+00	1.200E+00	1.200E+00	1.200E+00	1.200E+00	1.200E+00	1.390E+00	1.200E+00
TC-99M	5.520E-02	5.520E-02	5.520E-02	5.520E-02	5.520E-02	5.520E-02	6.320E-02	5.520E-02
TC-101	6.100E-03	6.100E-03	6.100E-03	6.100E-03	6.100E-03	6.100E-03	6.780E-03	6.100E-03
RU-103	3.250E+01	3.250E+01	3.250E+01	3.250E+01	3.250E+01	3.250E+01	3.790E+01	3.250E+01
RU-105	1.910E-01	1.910E-01	1.910E-01	1.910E-01	1.910E-01	1.910E-01	2.160E-01	1.910E-01
RU-106	1.270E+02	1.270E+02	1.270E+02	1.270E+02	1.270E+02	1.270E+02	1.520E+02	1.270E+02
AG-110M	1.030E+03	1.030E+03	1.030E+03	1.030E+03	1.030E+03	1.030E+03	1.200E+03	1.030E+03
TE-125M	4.650E-01	4.650E-01	4.650E-01	4.650E-01	4.650E-01	4.650E-01	6.380E-01	4.650E-01
TE-127	8.920E-04	8.920E-04	8.920E-04	8.920E-04	8.920E-04	8.920E-04	9.820E-04	8.920E-04
TE-127M	2.750E-02	2.750E-02	2.750E-02	2.750E-02	2.750E-02	2.750E-02	3.250E-02	2.750E-02
TE-129	7.860E-03	7.860E-03	7.860E-03	7.860E-03	7.860E-03	7.860E-03	9.300E-03	7.860E-03
TE-129M	5.930E+00	5.930E+00	5.930E+00	5.930E+00	5.930E+00	5.930E+00	6.930E+00	5.930E+00
TE-131	8.750E-03	8.750E-03	8.750E-03	8.750E-03	8.750E-03	8.750E-03	1.030E+01	8.750E-03
TE-131M	2.410E+00	2.410E+00	2.410E+00	2.410E+00	2.410E+00	2.410E+00	2.840E+00	2.410E+00
TE-132	1.270E+00	1.270E+00	1.270E+00	1.270E+00	1.270E+00	1.270E+00	1.490E+00	1.270E+00
I-130	1.650E+00	1.650E+00	1.650E+00	1.650E+00	1.650E+00	1.650E+00	2.010E+00	1.650E+00

APPENDIX D

A_i Teen Dose Factors for use in the Liquid Dose Calculations

Agegroup:	TEEN	Pathway:	Shoreline Sediment (SHDp)			Units:	mrem/hr / µCi/ml	
Nuclide	**Bone**	**Liver**	**Thyroid**	**Kidney**	**Lung**	**Gilli**	**Skin**	**Total Body**
I-131	5.160E+00	5.160E+00	5.160E+00	5.160E+00	5.160E+00	5.160E+00	6.260E+00	5.160E+00
I-132	3.730E-01	3.730E-01	3.730E-01	3.730E-01	3.730E-01	3.730E-01	4.390E-01	3.730E-01
I-133	7.350E-01	7.350E-01	7.350E-01	7.350E-01	7.350E-01	7.350E-01	8.930E-01	7.350E-01
I-134	1.340E-01	1.340E-01	1.340E-01	1.340E-01	1.340E-01	1.340E-01	1.590E-01	1.340E-01
I-135	7.570E-01	7.570E-01	7.570E-01	7.570E-01	7.570E-01	7.570E-01	8.830E-01	7.570E-01
CS-134	2.060E+03	2.060E+03	2.060E+03	2.060E+03	2.060E+03	2.060E+03	2.400E+03	2.060E+03
CS-136	4.520E+01	4.520E+01	4.520E+01	4.520E+01	4.520E+01	4.520E+01	5.130E+01	4.520E+01
CS-137	3.080E+03	3.080E+03	3.080E+03	3.080E+03	3.080E+03	3.080E+03	3.590E+03	3.080E+03
CS-138	1.080E-01	1.080E-01	1.080E-01	1.080E-01	1.080E-01	1.080E-01	1.230E-01	1.080E-01
BA-139	3.170E-02	3.170E-02	3.170E-02	3.170E-02	3.170E-02	3.170E-02	3.570E-02	3.170E-02
BA-140	6.150E+00	6.150E+00	6.150E+00	6.150E+00	6.150E+00	6.150E+00	7.030E+00	6.150E+00
BA-141	1.250E-02	1.250E-02	1.250E-02	1.250E-02	1.250E-02	1.250E-02	1.420E-02	1.250E-02
BA-142	1.340E-02	1.340E-02	1.340E-02	1.340E-02	1.340E-02	1.340E-02	1.530E-02	1.340E-02
LA-140	5.760E+00	5.760E+00	5.760E+00	5.760E+00	5.760E+00	5.760E+00	6.530E+00	5.760E+00
LA-142	2.280E-01	2.280E-01	2.280E-01	2.280E-01	2.280E-01	2.280E-01	2.730E-01	2.280E-01
CE-141	4.090E+00	4.090E+00	4.090E+00	4.090E+00	4.090E+00	4.090E+00	4.620E+00	4.090E+00
CE-143	6.930E-01	6.930E-01	6.930E-01	6.930E-01	6.930E-01	6.930E-01	7.870E-01	6.930E-01
CE-144	2.080E+01	2.080E+01	2.080E+01	2.080E+01	2.080E+01	2.080E+01	2.410E+01	2.080E+01
PR-143	0.000E+00	0.000E+00	0.000E+00	0.000E+00	0.000E+00	0.000E+00	0.000E+00	0.000E+00
PR-144	5.500E-04	5.500E-04	5.500E-04	5.500E-04	5.500E-04	5.500E-04	6.320E-04	5.500E-04
ND-147	2.520E+00	2.520E+00	2.520E+00	2.520E+00	2.520E+00	2.520E+00	3.020E+00	2.520E+00
W-187	7.050E-01	7.050E-01	7.050E-01	7.050E-01	7.050E-01	7.050E-01	8.190E-01	7.050E-01
NP-239	5.130E-01	5.130E-01	5.130E-01	5.130E-01	5.130E-01	5.130E-01	5.930E-01	5.130E-01

APPENDIX E

A_i Child Dose Factors for use in the Liquid Dose Calculations

Agegroup:	CHILD	Pathway:	Potable Water (PWtr)			Units:	mrem/hr / µCi/ml	
Nuclide	**Bone**	**Liver**	**Thyroid**	**Kidney**	**Lung**	**Gilli**	**Skin**	**Total Body**
H-3	0.000E+00	1.180E+01	1.180E+01	1.180E+01	1.180E+01	1.180E+01	0.000E+00	1.180E+01
C-14	7.030E+02	1.410E+02	1.410E+02	1.410E+02	1.410E+02	1.410E+02	0.000E+00	1.410E+02
NA-24	1.940E+02	1.940E+02	1.940E+02	1.940E+02	1.940E+02	1.940E+02	0.000E+00	1.940E+02
P-32	4.680E+04	2.190E+03	0.000E+00	0.000E+00	0.000E+00	1.290E+03	0.000E+00	1.800E+03
CR-51	0.000E+00	0.000E+00	2.840E-01	7.750E-02	5.180E-01	2.710E+01	0.000E+00	5.110E-01
MN-54	0.000E+00	6.210E+02	0.000E+00	1.740E+02	0.000E+00	5.220E+02	0.000E+00	1.660E+02
MN-56	0.000E+00	7.700E-01	0.000E+00	9.320E-01	0.000E+00	1.120E+02	0.000E+00	1.740E-01
FE-55	6.680E+02	3.550E+02	0.000E+00	0.000E+00	2.010E+02	6.570E+01	0.000E+00	1.100E+02
FE-59	9.520E+02	1.540E+03	0.000E+00	0.000E+00	4.470E+02	1.600E+03	0.000E+00	7.670E+02
CO-58	0.000E+00	1.040E+02	0.000E+00	0.000E+00	0.000E+00	6.070E+02	0.000E+00	3.190E+02
CO-60	0.000E+00	3.080E+02	0.000E+00	0.000E+00	0.000E+00	1.700E+03	0.000E+00	9.070E+02
NI-63	3.130E+04	1.670E+03	0.000E+00	0.000E+00	0.000E+00	1.130E+02	0.000E+00	1.060E+03
NI-65	4.760E+00	4.480E-01	0.000E+00	0.000E+00	0.000E+00	5.490E+01	0.000E+00	2.610E-01
CU-64	0.000E+00	7.390E+00	0.000E+00	1.780E+01	0.000E+00	3.470E+02	0.000E+00	4.460E+00
ZN-65	7.950E+02	2.120E+03	0.000E+00	1.340E+03	0.000E+00	3.720E+02	0.000E+00	1.320E+03
ZN-69	3.190E-04	4.610E-04	0.000E+00	2.800E-04	0.000E+00	2.900E-02	0.000E+00	4.260E-05
BR-83	0.000E+00	0.000E+00	0.000E+00	0.000E+00	0.000E+00	0.000E+00	0.000E+00	3.060E-01
BR-84	0.000E+00	0.000E+00	0.000E+00	0.000E+00	0.000E+00	0.000E+00	0.000E+00	1.780E-06
BR-85	0.000E+00	0.000E+00	0.000E+00	0.000E+00	0.000E+00	0.000E+00	0.000E+00	1.300E-76
RB-86	0.000E+00	3.820E+03	0.000E+00	0.000E+00	0.000E+00	2.460E+02	0.000E+00	2.350E+03
RB-88	0.000E+00	7.360E-12	0.000E+00	0.000E+00	0.000E+00	3.610E-13	0.000E+00	5.110E-12
RB-89	0.000E+00	6.300E-14	0.000E+00	0.000E+00	0.000E+00	5.490E-16	0.000E+00	5.600E-14
SR-89	7.620E+04	0.000E+00	0.000E+00	0.000E+00	0.000E+00	2.950E+03	0.000E+00	2.180E+03
SR-90	9.880E+05	0.000E+00	0.000E+00	0.000E+00	0.000E+00	1.330E+04	0.000E+00	2.510E+05
SR-91	5.810E+02	0.000E+00	0.000E+00	0.000E+00	0.000E+00	1.280E+03	0.000E+00	2.190E+01

APPENDIX E

A_i Child Dose Factors for use in the Liquid Dose Calculations

Agegroup:	CHILD	Pathway:	Potable Water (PWtr)			Units:	mrem/hr / µCi/ml	
Nuclide	**Bone**	**Liver**	**Thyroid**	**Kidney**	**Lung**	**Gilli**	**Skin**	**Total Body**
SR-92	2.430E+01	0.000E+00	0.000E+00	0.000E+00	0.000E+00	4.610E+02	0.000E+00	9.760E-01
Y-90	2.100E+00	0.000E+00	0.000E+00	0.000E+00	0.000E+00	5.980E+03	0.000E+00	5.620E-02
Y-91	3.480E+01	0.000E+00	0.000E+00	0.000E+00	0.000E+00	4.640E+03	0.000E+00	9.310E-01
Y-91M	9.860E-07	0.000E+00	0.000E+00	0.000E+00	0.000E+00	1.930E-03	0.000E+00	3.590E-08
Y-92	2.000E-02	0.000E+00	0.000E+00	0.000E+00	0.000E+00	5.770E+02	0.000E+00	5.710E-04
Y-93	2.900E-01	0.000E+00	0.000E+00	0.000E+00	0.000E+00	4.330E+03	0.000E+00	7.970E-03
ZR-95	6.710E+00	1.470E+00	0.000E+00	2.110E+00	0.000E+00	1.540E+03	0.000E+00	1.310E+00
ZR-97	2.480E-01	3.590E-02	0.000E+00	5.150E-02	0.000E+00	5.440E+03	0.000E+00	2.120E-02
NB-95	1.300E+00	5.040E-01	0.000E+00	4.740E-01	0.000E+00	9.330E+02	0.000E+00	3.600E-01
MO-99	0.000E+00	6.820E+02	0.000E+00	1.460E+03	0.000E+00	5.640E+02	0.000E+00	1.690E+02
TC-99M	1.350E-02	2.640E-02	0.000E+00	3.840E-01	1.340E-02	1.500E+01	0.000E+00	4.380E-01
TC-101	3.330E-17	3.480E-17	0.000E+00	5.940E-16	1.840E-17	1.110E-16	0.000E+00	4.410E-16
RU-103	4.210E+01	0.000E+00	0.000E+00	1.060E+02	0.000E+00	1.090E+03	0.000E+00	1.620E+01
RU-105	5.750E-01	0.000E+00	0.000E+00	5.060E+00	0.000E+00	3.750E+02	0.000E+00	2.090E-01
RU-106	6.800E+02	0.000E+00	0.000E+00	9.180E+02	0.000E+00	1.060E+04	0.000E+00	8.480E+01
AG-110M	3.130E+01	2.110E+01	0.000E+00	3.940E+01	0.000E+00	2.510E+03	0.000E+00	1.690E+01
TE-125M	6.590E+02	1.790E+02	1.850E+02	0.000E+00	0.000E+00	6.360E+02	0.000E+00	8.780E+01
TE-127	1.130E+01	3.050E+00	7.820E+00	3.210E+01	0.000E+00	4.410E+02	0.000E+00	2.420E+00
TE-127M	1.670E+03	4.510E+02	4.000E+02	4.780E+03	0.000E+00	1.360E+03	0.000E+00	1.990E+02
TE-129	5.730E-03	1.600E-03	4.090E-03	1.680E-02	0.000E+00	3.570E-01	0.000E+00	1.360E-03
TE-129M	2.800E+03	7.830E+02	9.030E+02	8.230E+03	0.000E+00	3.420E+03	0.000E+00	4.350E+02
TE-131	1.040E-08	3.160E-09	7.930E-09	3.140E-08	0.000E+00	5.450E-08	0.000E+00	3.090E-09
TE-131M	3.170E+02	1.100E+02	2.260E+02	1.060E+03	0.000E+00	4.450E+03	0.000E+00	1.170E+02
TE-132	5.280E+02	2.340E+02	3.400E+02	2.170E+03	0.000E+00	2.350E+03	0.000E+00	2.820E+02
I-130	8.650E+01	1.750E+02	1.930E+04	2.610E+02	0.000E+00	8.180E+01	0.000E+00	9.010E+01

APPENDIX E

A_i Child Dose Factors for use in the Liquid Dose Calculations

Agegroup:	CHILD	Pathway:	Potable Water (PWtr)			Units:	mrem/hr / µCi/ml	
Nuclide	**Bone**	**Liver**	**Thyroid**	**Kidney**	**Lung**	**Gilli**	**Skin**	**Total Body**
I-131	9.580E+02	9.630E+02	3.190E+05	1.580E+03	0.000E+00	8.580E+01	0.000E+00	5.470E+02
I-132	1.250E+00	2.300E+00	1.070E+02	3.520E+00	0.000E+00	2.710E+00	0.000E+00	1.060E+00
I-133	2.310E+02	2.850E+02	5.300E+04	4.750E+02	0.000E+00	1.150E+02	0.000E+00	1.080E+02
I-134	1.820E-03	3.370E-03	7.760E-02	5.160E-03	0.000E+00	2.240E-03	0.000E+00	1.550E-03
I-135	2.890E+01	5.210E+01	4.610E+03	7.990E+01	0.000E+00	3.970E+01	0.000E+00	2.460E+01
CS-134	1.360E+04	2.230E+04	0.000E+00	6.920E+03	2.480E+03	1.200E+02	0.000E+00	4.710E+03
CS-136	1.330E+03	3.660E+03	0.000E+00	1.950E+03	2.910E+02	1.290E+02	0.000E+00	2.370E+03
CS-137	1.900E+04	1.820E+04	0.000E+00	5.930E+03	2.130E+03	1.140E+02	0.000E+00	2.690E+03
CS-138	2.440E-06	3.390E-06	0.000E+00	2.380E-06	2.570E-07	1.560E-06	0.000E+00	2.150E-06
BA-139	5.940E-02	3.170E-05	0.000E+00	2.770E-05	1.860E-05	3.430E+00	0.000E+00	1.720E-03
BA-140	4.700E+03	4.120E+00	0.000E+00	1.340E+00	2.460E+00	2.380E+03	0.000E+00	2.740E+02
BA-141	1.620E-11	9.050E-15	0.000E+00	7.830E-15	5.310E-14	9.210E-12	0.000E+00	5.260E-13
BA-142	1.800E-20	1.300E-23	0.000E+00	1.050E-23	7.630E-24	2.350E-22	0.000E+00	1.010E-21
LA-140	4.780E-01	1.670E-01	0.000E+00	0.000E+00	0.000E+00	4.650E+03	0.000E+00	5.630E-02
LA-142	1.640E-04	5.210E-05	0.000E+00	0.000E+00	0.000E+00	1.030E+01	0.000E+00	1.630E-05
CE-141	2.280E+00	1.140E+00	0.000E+00	4.990E-01	0.000E+00	1.420E+03	0.000E+00	1.690E-01
CE-143	3.160E-01	1.710E+02	0.000E+00	7.180E-02	0.000E+00	2.510E+03	0.000E+00	2.480E-02
CE-144	1.210E+02	3.790E+01	0.000E+00	2.100E+01	0.000E+00	9.870E+03	0.000E+00	6.450E+00
PR-143	2.230E+00	6.690E-01	0.000E+00	3.620E-01	0.000E+00	2.400E+03	0.000E+00	1.110E-01
PR-144	2.200E-15	6.800E-16	0.000E+00	3.600E-16	0.000E+00	1.460E-12	0.000E+00	1.110E-16
ND-147	1.570E+00	1.270E+00	0.000E+00	6.990E-01	0.000E+00	2.020E+03	0.000E+00	9.860E-02
W-187	1.760E+01	1.040E+01	0.000E+00	0.000E+00	0.000E+00	1.460E+03	0.000E+00	4.680E+00
NP-239	2.630E-01	1.890E-02	0.000E+00	5.470E-02	0.000E+00	1.400E+03	0.000E+00	1.330E-02

APPENDIX E

A_i Child Dose Factors for use in the Liquid Dose Calculations

Agegroup:	CHILD	Pathway:	Fresh Water Fish - Sport (FFSP)			Units:	mrem/hr / µCi/ml	
Nuclide	**Bone**	**Liver**	**Thyroid**	**Kidney**	**Lung**	**Gilli**	**Skin**	**Total Body**
H-3	0.000E+00	1.440E-01	1.440E-01	1.440E-01	1.440E-01	1.440E-01	0.000E+00	1.440E-01
C-14	4.380E+04	8.760E+03	8.760E+03	8.760E+03	8.760E+03	8.760E+03	0.000E+00	8.760E+03
NA-24	1.510E+02	1.510E+02	1.510E+02	1.510E+02	1.510E+02	1.510E+02	0.000E+00	1.510E+02
P-32	1.850E+06	8.680E+04	0.000E+00	0.000E+00	0.000E+00	5.130E+04	0.000E+00	7.150E+04
CR-51	0.000E+00	0.000E+00	7.580E-01	2.070E-01	1.380E+00	7.240E+01	0.000E+00	1.370E+00
MN-54	0.000E+00	3.360E+03	0.000E+00	9.420E+02	0.000E+00	2.820E+03	0.000E+00	8.950E+02
MN-56	0.000E+00	1.650E-01	0.000E+00	2.000E-01	0.000E+00	2.400E+01	0.000E+00	3.730E-02
FE-55	9.040E+02	4.790E+02	0.000E+00	0.000E+00	2.710E+02	8.880E+01	0.000E+00	1.490E+02
FE-59	1.280E+03	2.070E+03	0.000E+00	0.000E+00	5.990E+02	2.150E+03	0.000E+00	1.030E+03
CO-58	0.000E+00	7.010E+01	0.000E+00	0.000E+00	0.000E+00	4.090E+02	0.000E+00	2.150E+02
CO-60	0.000E+00	2.080E+02	0.000E+00	0.000E+00	0.000E+00	1.150E+03	0.000E+00	6.130E+02
NI-63	4.230E+04	2.270E+03	0.000E+00	0.000E+00	0.000E+00	1.530E+02	0.000E+00	1.440E+03
NI-65	2.370E-01	2.230E-02	0.000E+00	0.000E+00	0.000E+00	2.740E+00	0.000E+00	1.300E-02
CU-64	0.000E+00	2.590E+00	0.000E+00	6.260E+00	0.000E+00	1.220E+02	0.000E+00	1.570E+00
ZN-65	2.150E+04	5.730E+04	0.000E+00	3.610E+04	0.000E+00	1.010E+04	0.000E+00	3.560E+04
ZN-69	1.080E-06	1.560E-06	0.000E+00	9.470E-07	0.000E+00	9.840E-05	0.000E+00	1.440E-07
BR-83	0.000E+00	0.000E+00	0.000E+00	0.000E+00	0.000E+00	0.000E+00	0.000E+00	5.340E-02
BR-84	0.000E+00	0.000E+00	0.000E+00	0.000E+00	0.000E+00	0.000E+00	0.000E+00	1.570E-12
BR-85	0.000E+00	0.000E+00	0.000E+00	0.000E+00	0.000E+00	0.000E+00	0.000E+00	0.000E+00
RB-86	0.000E+00	1.020E+05	0.000E+00	0.000E+00	0.000E+00	6.530E+03	0.000E+00	6.250E+04
RB-88	0.000E+00	1.330E-22	0.000E+00	0.000E+00	0.000E+00	6.510E-24	0.000E+00	9.220E-23
RB-89	0.000E+00	1.580E-26	0.000E+00	0.000E+00	0.000E+00	1.370E-28	0.000E+00	1.400E-26
SR-89	3.070E+04	0.000E+00	0.000E+00	0.000E+00	0.000E+00	1.190E+03	0.000E+00	8.780E+02
SR-90	4.010E+05	0.000E+00	0.000E+00	0.000E+00	0.000E+00	5.400E+03	0.000E+00	1.020E+05
SR-91	9.800E+01	0.000E+00	0.000E+00	0.000E+00	0.000E+00	2.160E+02	0.000E+00	3.700E+00

APPENDIX E

A_i Child Dose Factors for use in the Liquid Dose Calculations

Agegroup:	CHILD	Pathway:	Fresh Water Fish - Sport (FFSP)			Units:	mrem/hr / µCi/ml	
Nuclide	**Bone**	**Liver**	**Thyroid**	**Kidney**	**Lung**	**Gilli**	**Skin**	**Total Body**
SR-92	4.580E-01	0.000E+00	0.000E+00	0.000E+00	0.000E+00	8.670E+00	0.000E+00	1.840E-02
Y-90	6.240E-01	0.000E+00	0.000E+00	0.000E+00	0.000E+00	1.780E+03	0.000E+00	1.670E-02
Y-91	1.170E+01	0.000E+00	0.000E+00	0.000E+00	0.000E+00	1.560E+03	0.000E+00	3.130E-01
Y-91M	1.480E-11	0.000E+00	0.000E+00	0.000E+00	0.000E+00	2.900E-08	0.000E+00	5.390E-13
Y-92	6.440E-04	0.000E+00	0.000E+00	0.000E+00	0.000E+00	1.860E+01	0.000E+00	1.840E-05
Y-93	4.300E-02	0.000E+00	0.000E+00	0.000E+00	0.000E+00	6.420E+02	0.000E+00	1.180E-03
ZR-95	2.980E-01	6.550E-02	0.000E+00	9.370E-02	0.000E+00	6.830E+01	0.000E+00	5.830E-02
ZR-97	6.780E-03	9.790E-04	0.000E+00	1.410E-03	0.000E+00	1.480E+02	0.000E+00	5.780E-04
NB-95	5.210E+02	2.030E+02	0.000E+00	1.900E+02	0.000E+00	3.750E+05	0.000E+00	1.450E+02
MO-99	0.000E+00	8.130E+01	0.000E+00	1.740E+02	0.000E+00	6.720E+01	0.000E+00	2.010E+01
TC-99M	6.860E-04	1.350E-03	0.000E+00	1.950E-02	6.830E-04	7.650E-01	0.000E+00	2.230E-02
TC-101	3.610E-33	3.780E-33	0.000E+00	6.440E-32	2.000E-33	1.200E-32	0.000E+00	4.790E-32
RU-103	5.650E+00	0.000E+00	0.000E+00	1.420E+01	0.000E+00	1.460E+02	0.000E+00	2.170E+00
RU-105	1.190E-02	0.000E+00	0.000E+00	1.050E-01	0.000E+00	7.790E+00	0.000E+00	4.330E-03
RU-106	9.190E+01	0.000E+00	0.000E+00	1.240E+02	0.000E+00	1.430E+03	0.000E+00	1.150E+01
AG-110M	9.720E-01	6.570E-01	0.000E+00	1.220E+00	0.000E+00	7.810E+01	0.000E+00	5.250E-01
TE-125M	3.540E+03	9.610E+02	9.950E+02	0.000E+00	0.000E+00	3.420E+03	0.000E+00	4.730E+02
TE-127	2.520E+01	6.800E+00	1.750E+01	7.170E+01	0.000E+00	9.850E+02	0.000E+00	5.410E+00
TE-127M	9.040E+03	2.430E+03	2.160E+03	2.580E+04	0.000E+00	7.320E+03	0.000E+00	1.070E+03
TE-129	2.280E-05	6.370E-06	1.630E-05	6.680E-05	0.000E+00	1.420E-03	0.000E+00	5.420E-06
TE-129M	1.500E+04	4.190E+03	4.840E+03	4.410E+04	0.000E+00	1.830E+04	0.000E+00	2.330E+03
TE-131	1.210E-16	3.680E-17	9.220E-17	3.650E-16	0.000E+00	6.330E-16	0.000E+00	3.590E-17
TE-131M	1.300E+03	4.500E+02	9.250E+02	4.350E+03	0.000E+00	1.820E+04	0.000E+00	4.790E+02
TE-132	2.570E+03	1.140E+03	1.650E+03	1.050E+04	0.000E+00	1.140E+04	0.000E+00	1.370E+03
I-130	8.950E+00	1.810E+01	1.990E+03	2.700E+01	0.000E+00	8.460E+00	0.000E+00	9.320E+00

APPENDIX E

A_i Child Dose Factors for use in the Liquid Dose Calculations

Agegroup:	CHILD	Pathway:	Fresh Water Fish - Sport (FFSP)			Units:	mrem/hr / µCi/ml	
Nuclide	**Bone**	**Liver**	**Thyroid**	**Kidney**	**Lung**	**Gilli**	**Skin**	**Total Body**
I-131	1.860E+02	1.870E+02	6.190E+04	3.070E+02	0.000E+00	1.670E+01	0.000E+00	1.060E+02
I-132	6.830E-03	1.250E-02	5.820E-01	1.920E-02	0.000E+00	1.480E-02	0.000E+00	5.770E-03
I-133	3.140E+01	3.880E+01	7.210E+03	6.470E+01	0.000E+00	1.560E+01	0.000E+00	1.470E+01
I-134	2.750E-08	5.100E-08	1.170E-06	7.800E-08	0.000E+00	3.380E-08	0.000E+00	2.350E-08
I-135	1.670E+00	3.010E+00	2.660E+02	4.610E+00	0.000E+00	2.290E+00	0.000E+00	1.420E+00
CS-134	3.680E+05	6.040E+05	0.000E+00	1.870E+05	6.710E+04	3.250E+03	0.000E+00	1.270E+05
CS-136	3.510E+04	9.640E+04	0.000E+00	5.130E+04	7.660E+03	3.390E+03	0.000E+00	6.240E+04
CS-137	5.140E+05	4.920E+05	0.000E+00	1.600E+05	5.770E+04	3.080E+03	0.000E+00	7.270E+04
CS-138	1.210E-11	1.690E-11	0.000E+00	1.190E-11	1.280E-12	7.770E-12	0.000E+00	1.070E-11
BA-139	7.930E-06	4.230E-09	0.000E+00	3.700E-09	2.490E-09	4.580E-04	0.000E+00	2.300E-07
BA-140	2.480E+02	2.170E-01	0.000E+00	7.060E-02	1.290E-01	1.250E+02	0.000E+00	1.450E+01
BA-141	1.210E-24	6.800E-28	0.000E+00	5.880E-28	3.990E-27	6.920E-25	0.000E+00	3.950E-26
BA-142	3.460E-42	2.490E-45	0.000E+00	2.020E-45	1.470E-45	4.510E-44	0.000E+00	1.930E-43
LA-140	1.310E-01	4.590E-02	0.000E+00	0.000E+00	0.000E+00	1.280E+03	0.000E+00	1.550E-02
LA-142	2.970E-07	9.470E-08	0.000E+00	0.000E+00	0.000E+00	1.880E-02	0.000E+00	2.960E-08
CE-141	3.060E-02	1.520E-02	0.000E+00	6.680E-03	0.000E+00	1.900E+01	0.000E+00	2.260E-03
CE-143	3.320E-03	1.800E+00	0.000E+00	7.550E-04	0.000E+00	2.640E+01	0.000E+00	2.610E-04
CE-144	1.630E+00	5.120E-01	0.000E+00	2.830E-01	0.000E+00	1.330E+02	0.000E+00	8.710E-02
PR-143	7.340E-01	2.200E-01	0.000E+00	1.190E-01	0.000E+00	7.920E+02	0.000E+00	3.640E-02
PR-144	2.180E-28	6.750E-29	0.000E+00	3.570E-29	0.000E+00	1.450E-25	0.000E+00	1.100E-29
ND-147	5.150E-01	4.170E-01	0.000E+00	2.290E-01	0.000E+00	6.610E+02	0.000E+00	3.230E-02
W-187	2.010E+02	1.190E+02	0.000E+00	0.000E+00	0.000E+00	1.680E+04	0.000E+00	5.350E+01
NP-239	3.080E-02	2.210E-03	0.000E+00	6.390E-03	0.000E+00	1.630E+02	0.000E+00	1.550E-03

APPENDIX E

A_i Child Dose Factors for use in the Liquid Dose Calculations

Agegroup:	CHILD	Pathway:	Shoreline Sediment (SHDp)			Units:	mrem/hr / µCi/ml	
Nuclide	**Bone**	**Liver**	**Thyroid**	**Kidney**	**Lung**	**Gilli**	**Skin**	**Total Body**
H-3	0.000E+00	0.000E+00	0.000E+00	0.000E+00	0.000E+00	0.000E+00	0.000E+00	0.000E+00
C-14	0.000E+00	0.000E+00	0.000E+00	0.000E+00	0.000E+00	0.000E+00	0.000E+00	0.000E+00
NA-24	7.480E-01	7.480E-01	7.480E-01	7.480E-01	7.480E-01	7.480E-01	8.680E-01	7.480E-01
P-32	0.000E+00	0.000E+00	0.000E+00	0.000E+00	0.000E+00	0.000E+00	0.000E+00	0.000E+00
CR-51	2.920E-01	2.920E-01	2.920E-01	2.920E-01	2.920E-01	2.920E-01	3.450E-01	2.920E-01
MN-54	8.680E+01	8.680E+01	8.680E+01	8.680E+01	8.680E+01	8.680E+01	1.020E+02	8.680E+01
MN-56	5.650E-02	5.650E-02	5.650E-02	5.650E-02	5.650E-02	5.650E-02	6.680E-02	5.650E-02
FE-55	0.000E+00	0.000E+00	0.000E+00	0.000E+00	0.000E+00	0.000E+00	0.000E+00	0.000E+00
FE-59	1.710E+01	1.710E+01	1.710E+01	1.710E+01	1.710E+01	1.710E+01	2.010E+01	1.710E+01
CO-58	2.370E+01	2.370E+01	2.370E+01	2.370E+01	2.370E+01	2.370E+01	2.780E+01	2.370E+01
CO-60	1.350E+03	1.350E+03	1.350E+03	1.350E+03	1.350E+03	1.350E+03	1.580E+03	1.350E+03
NI-63	0.000E+00	0.000E+00	0.000E+00	0.000E+00	0.000E+00	0.000E+00	0.000E+00	0.000E+00
NI-65	1.860E-02	1.860E-02	1.860E-02	1.860E-02	1.860E-02	1.860E-02	2.160E-02	1.860E-02
CU-64	3.800E-02	3.800E-02	3.800E-02	3.800E-02	3.800E-02	3.800E-02	4.310E-02	3.800E-02
ZN-65	4.680E+01	4.680E+01	4.680E+01	4.680E+01	4.680E+01	4.680E+01	5.380E+01	4.680E+01
ZN-69	0.000E+00	0.000E+00	0.000E+00	0.000E+00	0.000E+00	0.000E+00	0.000E+00	0.000E+00
BR-83	3.050E-04	3.050E-04	3.050E-04	3.050E-04	3.050E-04	3.050E-04	4.430E-04	3.050E-04
BR-84	1.270E-02	1.270E-02	1.270E-02	1.270E-02	1.270E-02	1.270E-02	1.480E-02	1.270E-02
BR-85	0.000E+00	0.000E+00	0.000E+00	0.000E+00	0.000E+00	0.000E+00	0.000E+00	0.000E+00
RB-86	5.630E-01	5.630E-01	5.630E-01	5.630E-01	5.630E-01	5.630E-01	6.430E-01	5.630E-01
RB-88	2.070E-03	2.070E-03	2.070E-03	2.070E-03	2.070E-03	2.070E-03	2.370E-03	2.070E-03
RB-89	7.700E-03	7.700E-03	7.700E-03	7.700E-03	7.700E-03	7.700E-03	9.240E-03	7.700E-03
SR-89	1.360E-03	1.360E-03	1.360E-03	1.360E-03	1.360E-03	1.360E-03	1.570E-03	1.360E-03
SR-90	0.000E+00	0.000E+00	0.000E+00	0.000E+00	0.000E+00	0.000E+00	0.000E+00	0.000E+00
SR-91	1.350E-01	1.350E-01	1.350E-01	1.350E-01	1.350E-01	1.350E-01	1.570E-01	1.350E-01

APPENDIX E

A_i Child Dose Factors for use in the Liquid Dose Calculations

Agegroup:	CHILD	Pathway:	Shoreline Sediment (SHDp)			Units:	mrem/hr / µCi/ml	
Nuclide	**Bone**	**Liver**	**Thyroid**	**Kidney**	**Lung**	**Gilli**	**Skin**	**Total Body**
SR-92	4.860E-02	4.860E-02	4.860E-02	4.860E-02	4.860E-02	4.860E-02	5.410E-02	4.860E-02
Y-90	2.810E-04	2.810E-04	2.810E-04	2.810E-04	2.810E-04	2.810E-04	3.320E-04	2.810E-04
Y-91	6.720E-02	6.720E-02	6.720E-02	6.720E-02	6.720E-02	6.720E-02	7.560E-02	6.720E-02
Y-91M	6.280E-03	6.280E-03	6.280E-03	6.280E-03	6.280E-03	6.280E-03	7.270E-03	6.280E-03
Y-92	1.130E-02	1.130E-02	1.130E-02	1.130E-02	1.130E-02	1.130E-02	1.340E-02	1.130E-02
Y-93	1.150E-02	1.150E-02	1.150E-02	1.150E-02	1.150E-02	1.150E-02	1.570E-02	1.150E-02
ZR-95	1.530E+01	1.530E+01	1.530E+01	1.530E+01	1.530E+01	1.530E+01	1.780E+01	1.530E+01
ZR-97	1.850E-01	1.850E-01	1.850E-01	1.850E-01	1.850E-01	1.850E-01	2.160E-01	1.850E-01
NB-95	8.560E+00	8.560E+00	8.560E+00	8.560E+00	8.560E+00	8.560E+00	1.010E+01	8.560E+00
MO-99	2.500E-01	2.500E-01	2.500E-01	2.500E-01	2.500E-01	2.500E-01	2.900E-01	2.500E-01
TC-99M	1.150E-02	1.150E-02	1.150E-02	1.150E-02	1.150E-02	1.150E-02	1.320E-02	1.150E-02
TC-101	1.270E-03	1.270E-03	1.270E-03	1.270E-03	1.270E-03	1.270E-03	1.420E-03	1.270E-03
RU-103	6.780E+00	6.780E+00	6.780E+00	6.780E+00	6.780E+00	6.780E+00	7.910E+00	6.780E+00
RU-105	3.990E-02	3.990E-02	3.990E-02	3.990E-02	3.990E-02	3.990E-02	4.520E-02	3.990E-02
RU-106	2.640E+01	2.640E+01	2.640E+01	2.640E+01	2.640E+01	2.640E+01	3.170E+01	2.640E+01
AG-110M	2.150E+02	2.150E+02	2.150E+02	2.150E+02	2.150E+02	2.150E+02	2.510E+02	2.150E+02
TE-125M	9.720E-02	9.720E-02	9.720E-02	9.720E-02	9.720E-02	9.720E-02	1.330E-01	9.720E-02
TE-127	1.860E-04	1.860E-04	1.860E-04	1.860E-04	1.860E-04	1.860E-04	2.050E-04	1.860E-04
TE-127M	5.740E-03	5.740E-03	5.740E-03	5.740E-03	5.740E-03	5.740E-03	6.780E-03	5.740E-03
TE-129	1.640E-03	1.640E-03	1.640E-03	1.640E-03	1.640E-03	1.640E-03	1.940E-03	1.640E-03
TE-129M	1.240E+00	1.240E+00	1.240E+00	1.240E+00	1.240E+00	1.240E+00	1.450E+00	1.240E+00
TE-131	1.830E-03	1.830E-03	1.830E-03	1.830E-03	1.830E-03	1.830E-03	2.160E+00	1.830E-03
TE-131M	5.030E-01	5.030E-01	5.030E-01	5.030E-01	5.030E-01	5.030E-01	5.920E-01	5.030E-01
TE-132	2.650E-01	2.650E-01	2.650E-01	2.650E-01	2.650E-01	2.650E-01	3.120E-01	2.650E-01
I-130	3.450E-01	3.450E-01	3.450E-01	3.450E-01	3.450E-01	3.450E-01	4.190E-01	3.450E-01

APPENDIX E

A_i Child Dose Factors for use in the Liquid Dose Calculations

Agegroup:	CHILD	Pathway:	Shoreline Sediment (SHDp)			Units:	mrem/hr / µCi/ml	
Nuclide	**Bone**	**Liver**	**Thyroid**	**Kidney**	**Lung**	**Gilli**	**Skin**	**Total Body**
I-131	1.080E+00	1.080E+00	1.080E+00	1.080E+00	1.080E+00	1.080E+00	1.310E+00	1.080E+00
I-132	7.800E-02	7.800E-02	7.800E-02	7.800E-02	7.800E-02	7.800E-02	9.180E-02	7.800E-02
I-133	1.540E-01	1.540E-01	1.540E-01	1.540E-01	1.540E-01	1.540E-01	1.870E-01	1.540E-01
I-134	2.800E-02	2.800E-02	2.800E-02	2.800E-02	2.800E-02	2.800E-02	3.320E-02	2.800E-02
I-135	1.580E-01	1.580E-01	1.580E-01	1.580E-01	1.580E-01	1.580E-01	1.850E-01	1.580E-01
CS-134	4.300E+02	4.300E+02	4.300E+02	4.300E+02	4.300E+02	4.300E+02	5.010E+02	4.300E+02
CS-136	9.450E+00	9.450E+00	9.450E+00	9.450E+00	9.450E+00	9.450E+00	1.070E+01	9.450E+00
CS-137	6.440E+02	6.440E+02	6.440E+02	6.440E+02	6.440E+02	6.440E+02	7.510E+02	6.440E+02
CS-138	2.250E-02	2.250E-02	2.250E-02	2.250E-02	2.250E-02	2.250E-02	2.570E-02	2.250E-02
BA-139	6.630E-03	6.630E-03	6.630E-03	6.630E-03	6.630E-03	6.630E-03	7.460E-03	6.630E-03
BA-140	1.290E+00	1.290E+00	1.290E+00	1.290E+00	1.290E+00	1.290E+00	1.470E+00	1.290E+00
BA-141	2.610E-03	2.610E-03	2.610E-03	2.610E-03	2.610E-03	2.610E-03	2.980E-03	2.610E-03
BA-142	2.810E-03	2.810E-03	2.810E-03	2.810E-03	2.810E-03	2.810E-03	3.200E-03	2.810E-03
LA-140	1.200E+00	1.200E+00	1.200E+00	1.200E+00	1.200E+00	1.200E+00	1.360E+00	1.200E+00
LA-142	4.760E-02	4.760E-02	4.760E-02	4.760E-02	4.760E-02	4.760E-02	5.710E-02	4.760E-02
CE-141	8.560E-01	8.560E-01	8.560E-01	8.560E-01	8.560E-01	8.560E-01	9.650E-01	8.560E-01
CE-143	1.450E-01	1.450E-01	1.450E-01	1.450E-01	1.450E-01	1.450E-01	1.650E-01	1.450E-01
CE-144	4.350E+00	4.350E+00	4.350E+00	4.350E+00	4.350E+00	4.350E+00	5.040E+00	4.350E+00
PR-143	0.000E+00	0.000E+00	0.000E+00	0.000E+00	0.000E+00	0.000E+00	0.000E+00	0.000E+00
PR-144	1.150E-04	1.150E-04	1.150E-04	1.150E-04	1.150E-04	1.150E-04	1.320E-04	1.150E-04
ND-147	5.260E-01	5.260E-01	5.260E-01	5.260E-01	5.260E-01	5.260E-01	6.310E-01	5.260E-01
W-187	1.470E-01	1.470E-01	1.470E-01	1.470E-01	1.470E-01	1.470E-01	1.710E-01	1.470E-01
NP-239	1.070E-01	1.070E-01	1.070E-01	1.070E-01	1.070E-01	1.070E-01	1.240E-01	1.070E-01

APPENDIX F

A_i Infant Dose Factors for use in the Liquid Dose Calculations

Agegroup:	INFANT	Pathway:	Potable Water (PWtr)			Units:	mrem/hr / µCi/ml	
Nuclide	**Bone**	**Liver**	**Thyroid**	**Kidney**	**Lung**	**Gilli**	**Skin**	**Total Body**
H-3	0.000E+00	1.160E+01	1.160E+01	1.160E+01	1.160E+01	1.160E+01	0.000E+00	1.160E+01
C-14	8.920E+02	1.900E+02	1.900E+02	1.900E+02	1.900E+02	1.900E+02	0.000E+00	1.900E+02
NA-24	2.190E+02	2.190E+02	2.190E+02	2.190E+02	2.190E+02	2.190E+02	0.000E+00	2.190E+02
P-32	6.240E+04	3.670E+03	0.000E+00	0.000E+00	0.000E+00	8.450E+02	0.000E+00	2.420E+03
CR-51	0.000E+00	0.000E+00	3.420E-01	7.470E-02	6.650E-01	1.530E+01	0.000E+00	5.240E-01
MN-54	0.000E+00	7.480E+02	0.000E+00	1.660E+02	0.000E+00	2.750E+02	0.000E+00	1.690E+02
MN-56	0.000E+00	1.220E+00	0.000E+00	1.050E+00	0.000E+00	1.110E+02	0.000E+00	2.100E-01
FE-55	5.230E+02	3.380E+02	0.000E+00	0.000E+00	1.650E+02	4.290E+01	0.000E+00	9.030E+01
FE-59	1.150E+03	2.010E+03	0.000E+00	0.000E+00	5.940E+02	9.590E+02	0.000E+00	7.910E+02
CO-58	0.000E+00	1.350E+02	0.000E+00	0.000E+00	0.000E+00	3.360E+02	0.000E+00	3.360E+02
CO-60	0.000E+00	4.060E+02	0.000E+00	0.000E+00	0.000E+00	9.670E+02	0.000E+00	9.590E+02
NI-63	2.390E+04	1.470E+03	0.000E+00	0.000E+00	0.000E+00	7.340E+01	0.000E+00	8.280E+02
NI-65	6.520E+00	7.380E-01	0.000E+00	0.000E+00	0.000E+00	5.620E+01	0.000E+00	3.360E-01
CU-64	0.000E+00	1.190E+01	0.000E+00	2.010E+01	0.000E+00	2.440E+02	0.000E+00	5.500E+00
ZN-65	6.910E+02	2.370E+03	0.000E+00	1.150E+03	0.000E+00	2.000E+03	0.000E+00	1.090E+03
ZN-69	4.390E-04	7.910E-04	0.000E+00	3.290E-04	0.000E+00	6.450E-02	0.000E+00	5.890E-05
BR-83	0.000E+00	0.000E+00	0.000E+00	0.000E+00	0.000E+00	0.000E+00	0.000E+00	4.200E-01
BR-84	0.000E+00	0.000E+00	0.000E+00	0.000E+00	0.000E+00	0.000E+00	0.000E+00	2.220E-06
BR-85	0.000E+00	0.000E+00	0.000E+00	0.000E+00	0.000E+00	0.000E+00	0.000E+00	1.800E-76
RB-86	0.000E+00	6.280E+03	0.000E+00	0.000E+00	0.000E+00	1.610E+02	0.000E+00	3.100E+03
RB-88	0.000E+00	1.250E-11	0.000E+00	0.000E+00	0.000E+00	1.220E-11	0.000E+00	6.840E-12
RB-89	0.000E+00	9.960E-14	0.000E+00	0.000E+00	0.000E+00	3.390E-14	0.000E+00	6.860E-14
SR-89	9.380E+04	0.000E+00	0.000E+00	0.000E+00	0.000E+00	1.930E+03	0.000E+00	2.690E+03
SR-90	6.960E+05	0.000E+00	0.000E+00	0.000E+00	0.000E+00	8.690E+03	0.000E+00	1.770E+05
SR-91	7.830E+02	0.000E+00	0.000E+00	0.000E+00	0.000E+00	9.270E+02	0.000E+00	2.830E+01

APPENDIX F

A_i Infant Dose Factors for use in the Liquid Dose Calculations

Agegroup:	INFANT	Pathway:	Potable Water (PWtr)			Units:	mrem/hr / µCi/ml	
Nuclide	**Bone**	**Liver**	**Thyroid**	**Kidney**	**Lung**	**Gilli**	**Skin**	**Total Body**
SR-92	3.350E+01	0.000E+00	0.000E+00	0.000E+00	0.000E+00	3.610E+02	0.000E+00	1.240E+00
Y-90	2.870E+00	0.000E+00	0.000E+00	0.000E+00	0.000E+00	3.970E+03	0.000E+00	7.700E-02
Y-91	4.230E+01	0.000E+00	0.000E+00	0.000E+00	0.000E+00	3.030E+03	0.000E+00	1.130E+00
Y-91M	1.350E-06	0.000E+00	0.000E+00	0.000E+00	0.000E+00	4.510E-03	0.000E+00	4.610E-08
Y-92	2.740E-02	0.000E+00	0.000E+00	0.000E+00	0.000E+00	5.240E+02	0.000E+00	7.710E-04
Y-93	4.010E-01	0.000E+00	0.000E+00	0.000E+00	0.000E+00	3.170E+03	0.000E+00	1.090E-02
ZR-95	7.710E+00	1.880E+00	0.000E+00	2.020E+00	0.000E+00	9.350E+02	0.000E+00	1.330E+00
ZR-97	3.400E-01	5.840E-02	0.000E+00	5.890E-02	0.000E+00	3.720E+03	0.000E+00	2.670E-02
NB-95	1.560E+00	6.440E-01	0.000E+00	4.620E-01	0.000E+00	5.440E+02	0.000E+00	3.720E-01
MO-99	0.000E+00	1.130E+03	0.000E+00	1.680E+03	0.000E+00	3.710E+02	0.000E+00	2.200E+02
TC-99M	1.810E-02	3.740E-02	0.000E+00	4.020E-01	1.950E-02	1.090E+01	0.000E+00	4.820E-01
TC-101	4.570E-17	5.750E-17	0.000E+00	6.840E-16	3.140E-17	9.780E-15	0.000E+00	5.690E-16
RU-103	5.520E+01	0.000E+00	0.000E+00	1.150E+02	0.000E+00	6.710E+02	0.000E+00	1.850E+01
RU-105	7.850E-01	0.000E+00	0.000E+00	5.770E+00	0.000E+00	3.120E+02	0.000E+00	2.640E-01
RU-106	9.060E+02	0.000E+00	0.000E+00	1.070E+03	0.000E+00	6.880E+03	0.000E+00	1.130E+02
AG-110M	3.740E+01	2.730E+01	0.000E+00	3.910E+01	0.000E+00	1.420E+03	0.000E+00	1.810E+01
TE-125M	8.710E+02	2.910E+02	2.930E+02	0.000E+00	0.000E+00	4.150E+02	0.000E+00	1.180E+02
TE-127	1.550E+01	5.200E+00	1.260E+01	3.790E+01	0.000E+00	3.260E+02	0.000E+00	3.340E+00
TE-127M	2.190E+03	7.280E+02	6.340E+02	5.400E+03	0.000E+00	8.850E+02	0.000E+00	2.660E+02
TE-129	7.860E-03	2.710E-03	6.590E-03	1.960E-02	0.000E+00	6.280E-01	0.000E+00	1.840E-03
TE-129M	3.720E+03	1.280E+03	1.430E+03	9.310E+03	0.000E+00	2.220E+03	0.000E+00	5.730E+02
TE-131	1.420E-08	5.250E-09	1.270E-08	3.640E-08	0.000E+00	5.750E-07	0.000E+00	3.990E-09
TE-131M	4.330E+02	1.740E+02	3.540E+02	1.200E+03	0.000E+00	2.940E+03	0.000E+00	1.440E+02
TE-132	7.030E+02	3.480E+02	5.140E+02	2.180E+03	0.000E+00	1.290E+03	0.000E+00	3.250E+02
I-130	1.150E+02	2.530E+02	2.840E+04	2.780E+02	0.000E+00	5.430E+01	0.000E+00	1.020E+02

APPENDIX F

A_i Infant Dose Factors for use in the Liquid Dose Calculations

Agegroup:	INFANT	Pathway:	Potable Water (PWtr)			Units:	mrem/hr / µCi/ml	
Nuclide	**Bone**	**Liver**	**Thyroid**	**Kidney**	**Lung**	**Gilli**	**Skin**	**Total Body**
I-131	1.290E+03	1.520E+03	5.010E+05	1.780E+03	0.000E+00	5.440E+01	0.000E+00	6.700E+02
I-132	1.680E+00	3.410E+00	1.600E+02	3.800E+00	0.000E+00	2.760E+00	0.000E+00	1.210E+00
I-133	3.150E+02	4.590E+02	8.350E+04	5.400E+02	0.000E+00	7.770E+01	0.000E+00	1.340E+02
I-134	2.440E-03	4.990E-03	1.160E-01	5.580E-03	0.000E+00	5.160E-03	0.000E+00	1.780E-03
I-135	3.900E+01	7.750E+01	6.950E+03	8.640E+01	0.000E+00	2.800E+01	0.000E+00	2.830E+01
CS-134	1.420E+04	2.640E+04	0.000E+00	6.810E+03	2.790E+03	7.180E+01	0.000E+00	2.670E+03
CS-136	1.680E+03	4.950E+03	0.000E+00	1.970E+03	4.030E+02	7.510E+01	0.000E+00	1.850E+03
CS-137	1.960E+04	2.300E+04	0.000E+00	6.170E+03	2.500E+03	7.190E+01	0.000E+00	1.630E+03
CS-138	3.330E-06	5.410E-06	0.000E+00	2.700E-06	4.210E-07	8.650E-06	0.000E+00	2.620E-06
BA-139	8.180E-02	5.420E-05	0.000E+00	3.260E-05	3.290E-05	5.180E+00	0.000E+00	2.370E-03
BA-140	6.260E+03	6.260E+00	0.000E+00	1.490E+00	3.840E+00	1.540E+03	0.000E+00	3.230E+02
BA-141	2.220E-11	1.520E-14	0.000E+00	9.140E-15	9.250E-15	2.710E-10	0.000E+00	7.000E-13
BA-142	2.460E-20	2.040E-23	0.000E+00	1.180E-23	1.240E-23	1.010E-19	0.000E+00	1.210E-21
LA-140	6.460E-01	2.550E-01	0.000E+00	0.000E+00	0.000E+00	2.990E+03	0.000E+00	6.550E-02
LA-142	2.220E-04	8.160E-05	0.000E+00	0.000E+00	0.000E+00	1.390E+01	0.000E+00	1.950E-05
CE-141	2.930E+00	1.790E+00	0.000E+00	5.510E-01	0.000E+00	9.230E+02	0.000E+00	2.100E-01
CE-143	4.330E-01	2.870E+02	0.000E+00	8.360E-02	0.000E+00	1.670E+03	0.000E+00	3.270E-02
CE-144	1.120E+02	4.580E+01	0.000E+00	1.850E+01	0.000E+00	6.430E+03	0.000E+00	6.270E+00
PR-143	2.980E+00	1.110E+00	0.000E+00	4.140E-01	0.000E+00	1.570E+03	0.000E+00	1.480E-01
PR-144	3.020E-15	1.170E-15	0.000E+00	4.240E-16	0.000E+00	5.440E-11	0.000E+00	1.520E-16
ND-147	2.020E+00	2.070E+00	0.000E+00	7.980E-01	0.000E+00	1.310E+03	0.000E+00	1.270E-01
W-187	2.400E+01	1.670E+01	0.000E+00	0.000E+00	0.000E+00	9.790E+02	0.000E+00	5.760E+00
NP-239	3.600E-01	3.220E-02	0.000E+00	6.430E-02	0.000E+00	9.320E+02	0.000E+00	1.820E-02

APPENDIX G

R_i Adult Dose Factors for use in the Gaseous Dose Calculations

Agegroup:	ADULT	Pathway:	Grs/Cow/Milk (CMILK)			Units:	m^2·mrem/yr / µCi/sec; mrem/yr / µCi/m^3 (H-3)	
Nuclide	**Bone**	**Liver**	**Thyroid**	**Kidney**	**Lung**	**Gilli**	**Skin**	**Total Body**
H-3	0.000E+00	7.630E+02	7.630E+02	7.630E+02	7.630E+02	7.630E+02	0.000E+00	7.630E+02
C-14	2.630E+08	5.270E+07	5.270E+07	5.270E+07	5.270E+07	5.270E+07	0.000E+00	5.270E+07
NA-24	2.440E+06	2.440E+06	2.440E+06	2.440E+06	2.440E+06	2.440E+06	0.000E+00	2.440E+06
P-32	1.710E+10	1.060E+09	0.000E+00	0.000E+00	0.000E+00	1.920E+09	0.000E+00	6.610E+08
CR-51	0.000E+00	0.000E+00	1.710E+04	6.300E+03	3.790E+04	7.190E+06	0.000E+00	2.860E+04
MN-54	0.000E+00	8.410E+06	0.000E+00	2.500E+06	0.000E+00	2.580E+07	0.000E+00	1.610E+06
MN-56	0.000E+00	4.090E-03	0.000E+00	5.190E-03	0.000E+00	1.310E-01	0.000E+00	7.260E-04
FE-55	2.510E+07	1.740E+07	0.000E+00	0.000E+00	9.680E+06	9.950E+06	0.000E+00	4.050E+06
FE-59	2.970E+07	6.980E+07	0.000E+00	0.000E+00	1.950E+07	2.330E+08	0.000E+00	2.680E+07
CO-58	0.000E+00	4.710E+06	0.000E+00	0.000E+00	0.000E+00	9.550E+07	0.000E+00	1.060E+07
CO-60	0.000E+00	1.640E+07	0.000E+00	0.000E+00	0.000E+00	3.080E+08	0.000E+00	3.620E+07
NI-63	6.730E+09	4.660E+08	0.000E+00	0.000E+00	0.000E+00	9.730E+07	0.000E+00	2.260E+08
NI-65	3.700E-01	4.810E-02	0.000E+00	0.000E+00	0.000E+00	1.220E+00	0.000E+00	2.190E-02
CU-64	0.000E+00	2.380E+04	0.000E+00	6.010E+04	0.000E+00	2.030E+06	0.000E+00	1.120E+04
ZN-65	1.370E+09	4.370E+09	0.000E+00	2.920E+09	0.000E+00	2.750E+09	0.000E+00	1.970E+09
ZN-69	2.090E-12	4.000E-12	0.000E+00	2.600E-12	0.000E+00	6.010E-13	0.000E+00	2.780E-13
BR-83	0.000E+00	0.000E+00	0.000E+00	0.000E+00	0.000E+00	1.400E-01	0.000E+00	9.720E-02
BR-84	0.000E+00	0.000E+00	0.000E+00	0.000E+00	0.000E+00	1.260E-28	0.000E+00	1.610E-23
BR-85	0.000E+00	0.000E+00	0.000E+00	0.000E+00	0.000E+00	0.000E+00	0.000E+00	0.000E+00
RB-86	0.000E+00	2.590E+09	0.000E+00	0.000E+00	0.000E+00	5.120E+08	0.000E+00	1.210E+09
RB-88	0.000E+00	2.140E-45	0.000E+00	0.000E+00	0.000E+00	2.960E-56	0.000E+00	1.140E-45
RB-89	0.000E+00	4.330E-53	0.000E+00	0.000E+00	0.000E+00	2.510E-66	0.000E+00	3.040E-53
SR-89	1.450E+09	0.000E+00	0.000E+00	0.000E+00	0.000E+00	2.330E+08	0.000E+00	4.160E+07
SR-90	4.680E+10	0.000E+00	0.000E+00	0.000E+00	0.000E+00	1.350E+09	0.000E+00	1.150E+10
SR-91	2.890E+04	0.000E+00	0.000E+00	0.000E+00	0.000E+00	1.380E+05	0.000E+00	1.170E+03

APPENDIX G

R_i Adult Dose Factors for use in the Gaseous Dose Calculations

Agegroup:	ADULT	Pathway:	Grs/Cow/Milk (CMILK)			Units:	m^2·mrem/yr / µCi/sec; mrem/yr / µCi/m^3 (H-3)	
Nuclide	**Bone**	**Liver**	**Thyroid**	**Kidney**	**Lung**	**Gilli**	**Skin**	**Total Body**
SR-92	4.880E-01	0.000E+00	0.000E+00	0.000E+00	0.000E+00	9.680E+00	0.000E+00	2.110E-02
Y-90	7.080E+01	0.000E+00	0.000E+00	0.000E+00	0.000E+00	7.510E+05	0.000E+00	1.900E+00
Y-91	8.590E+03	0.000E+00	0.000E+00	0.000E+00	0.000E+00	4.730E+06	0.000E+00	2.300E+02
Y-91M	5.980E-20	0.000E+00	0.000E+00	0.000E+00	0.000E+00	1.760E-19	0.000E+00	2.320E-21
Y-92	5.580E-05	0.000E+00	0.000E+00	0.000E+00	0.000E+00	9.770E-01	0.000E+00	1.630E-06
Y-93	2.230E-01	0.000E+00	0.000E+00	0.000E+00	0.000E+00	7.090E+03	0.000E+00	6.170E-03
ZR-95	9.430E+02	3.030E+02	0.000E+00	4.750E+02	0.000E+00	9.590E+05	0.000E+00	2.050E+02
ZR-97	4.330E-01	8.740E-02	0.000E+00	1.320E-01	0.000E+00	2.710E+04	0.000E+00	4.000E-02
NB-95	8.260E+04	4.590E+04	0.000E+00	4.540E+04	0.000E+00	2.790E+08	0.000E+00	2.470E+04
MO-99	0.000E+00	2.480E+07	0.000E+00	5.610E+07	0.000E+00	5.740E+07	0.000E+00	4.710E+06
TC-99M	3.320E+00	9.380E+00	0.000E+00	1.420E+02	4.600E+00	5.550E+03	0.000E+00	1.200E+02
TC-101	2.590E-60	3.740E-60	0.000E+00	6.730E-59	1.910E-60	1.120E-71	0.000E+00	3.670E-59
RU-103	1.020E+03	0.000E+00	0.000E+00	3.890E+03	0.000E+00	1.190E+05	0.000E+00	4.390E+02
RU-105	8.570E-04	0.000E+00	0.000E+00	1.110E-02	0.000E+00	5.240E-01	0.000E+00	3.380E-04
RU-106	2.040E+04	0.000E+00	0.000E+00	3.940E+04	0.000E+00	1.320E+06	0.000E+00	2.580E+03
AG-110M	5.820E+07	5.390E+07	0.000E+00	1.060E+08	0.000E+00	2.200E+10	0.000E+00	3.200E+07
TE-125M	1.630E+07	5.900E+06	4.900E+06	6.630E+07	0.000E+00	6.500E+07	0.000E+00	2.180E+06
TE-127	6.530E+02	2.340E+02	4.840E+02	2.660E+03	0.000E+00	5.150E+04	0.000E+00	1.410E+02
TE-127M	4.580E+07	1.640E+07	1.170E+07	1.860E+08	0.000E+00	1.540E+08	0.000E+00	5.580E+06
TE-129	2.830E-10	1.060E-10	2.170E-10	1.190E-09	0.000E+00	2.130E-10	0.000E+00	6.880E-11
TE-129M	6.020E+07	2.250E+07	2.070E+07	2.510E+08	0.000E+00	3.030E+08	0.000E+00	9.530E+06
TE-131	3.600E-33	1.500E-33	2.960E-33	1.580E-32	0.000E+00	5.100E-34	0.000E+00	1.140E-33
TE-131M	3.610E+05	1.770E+05	2.800E+05	1.790E+06	0.000E+00	1.750E+07	0.000E+00	1.470E+05
TE-132	2.400E+06	1.550E+06	1.720E+06	1.500E+07	0.000E+00	7.350E+07	0.000E+00	1.460E+06
I-130	4.200E+05	1.240E+06	1.050E+08	1.930E+06	0.000E+00	1.070E+06	0.000E+00	4.890E+05

APPENDIX G

R_i Adult Dose Factors for use in the Gaseous Dose Calculations

Agegroup:	ADULT	Pathway:	Grs/Cow/Milk (CMILK)			Units:	m^2·mrem/yr / µCi/sec; mrem/yr / µCi/m^3 (H-3)	
Nuclide	**Bone**	**Liver**	**Thyroid**	**Kidney**	**Lung**	**Gilli**	**Skin**	**Total Body**
I-131	2.960E+08	4.230E+08	1.390E+11	7.260E+08	0.000E+00	1.120E+08	0.000E+00	2.430E+08
I-132	1.640E-01	4.390E-01	1.540E+01	7.000E-01	0.000E+00	8.250E-02	0.000E+00	1.540E-01
I-133	3.870E+06	6.730E+06	9.890E+08	1.170E+07	0.000E+00	6.050E+06	0.000E+00	2.050E+06
I-134	2.020E-12	5.480E-12	9.490E-11	8.710E-12	0.000E+00	4.770E-15	0.000E+00	1.960E-12
I-135	1.280E+04	3.360E+04	2.220E+06	5.390E+04	0.000E+00	3.800E+04	0.000E+00	1.240E+04
CS-134	5.650E+09	1.350E+10	0.000E+00	4.350E+09	1.450E+09	2.350E+08	0.000E+00	1.100E+10
CS-136	2.630E+08	1.040E+09	0.000E+00	5.780E+08	7.930E+07	1.180E+08	0.000E+00	7.480E+08
CS-137	7.380E+09	1.010E+10	0.000E+00	3.430E+09	1.140E+09	1.950E+08	0.000E+00	6.610E+09
CS-138	9.050E-24	1.790E-23	0.000E+00	1.310E-23	1.300E-24	7.620E-29	0.000E+00	8.850E-24
BA-139	4.420E-08	3.150E-11	0.000E+00	2.940E-11	1.790E-11	7.830E-08	0.000E+00	1.290E-09
BA-140	2.690E+07	3.380E+04	0.000E+00	1.150E+04	1.930E+04	5.530E+07	0.000E+00	1.760E+06
BA-141	4.090E-46	3.090E-49	0.000E+00	2.880E-49	1.760E-49	1.930E-55	0.000E+00	1.380E-47
BA-142	2.640E-80	2.720E-83	0.000E+00	2.300E-83	1.540E-83	3.720E-98	0.000E+00	1.660E-81
LA-140	4.510E+00	2.270E+00	0.000E+00	0.000E+00	0.000E+00	1.670E+05	0.000E+00	6.010E-01
LA-142	1.860E-11	8.460E-12	0.000E+00	0.000E+00	0.000E+00	6.170E-08	0.000E+00	2.110E-12
CE-141	4.840E+03	3.280E+03	0.000E+00	1.520E+03	0.000E+00	1.250E+07	0.000E+00	3.720E+02
CE-143	4.160E+01	3.070E+04	0.000E+00	1.350E+01	0.000E+00	1.150E+06	0.000E+00	3.400E+00
CE-144	3.580E+05	1.500E+05	0.000E+00	8.870E+04	0.000E+00	1.210E+08	0.000E+00	1.920E+04
PR-143	1.580E+02	6.330E+01	0.000E+00	3.660E+01	0.000E+00	6.920E+05	0.000E+00	7.830E+00
PR-144	5.870E-54	2.440E-54	0.000E+00	1.380E-54	0.000E+00	8.450E-61	0.000E+00	2.990E-55
ND-147	9.420E+01	1.090E+02	0.000E+00	6.360E+01	0.000E+00	5.220E+05	0.000E+00	6.510E+00
W-187	6.510E+03	5.450E+03	0.000E+00	0.000E+00	0.000E+00	1.780E+06	0.000E+00	1.900E+03
NP-239	3.670E+00	3.610E-01	0.000E+00	1.130E+00	0.000E+00	7.410E+04	0.000E+00	1.990E-01

APPENDIX G

R_i Adult Dose Factors for use in the Gaseous Dose Calculations

Agegroup:	ADULT	Pathway:	Grs/Goat/Milk (GMILK)			Units:	m^2·mrem/yr / µCi/sec; mrem/yr / µCi/m^3 (H-3)	
Nuclide	**Bone**	**Liver**	**Thyroid**	**Kidney**	**Lung**	**Gilli**	**Skin**	**Total Body**
H-3	0.000E+00	1.560E+03	1.560E+03	1.560E+03	1.560E+03	1.560E+03	0.000E+00	1.560E+03
C-14	2.630E+08	5.270E+07	5.270E+07	5.270E+07	5.270E+07	5.270E+07	0.000E+00	5.270E+07
NA-24	2.930E+05	2.930E+05	2.930E+05	2.930E+05	2.930E+05	2.930E+05	0.000E+00	2.930E+05
P-32	2.050E+10	1.280E+09	0.000E+00	0.000E+00	0.000E+00	2.310E+09	0.000E+00	7.930E+08
CR-51	0.000E+00	0.000E+00	2.050E+03	7.550E+02	4.550E+03	8.620E+05	0.000E+00	3.430E+03
MN-54	0.000E+00	1.010E+06	0.000E+00	3.000E+05	0.000E+00	3.090E+06	0.000E+00	1.930E+05
MN-56	0.000E+00	4.910E-04	0.000E+00	6.230E-04	0.000E+00	1.570E-02	0.000E+00	8.710E-05
FE-55	3.260E+05	2.260E+05	0.000E+00	0.000E+00	1.260E+05	1.290E+05	0.000E+00	5.260E+04
FE-59	3.860E+05	9.070E+05	0.000E+00	0.000E+00	2.540E+05	3.020E+06	0.000E+00	3.480E+05
CO-58	0.000E+00	5.660E+05	0.000E+00	0.000E+00	0.000E+00	1.150E+07	0.000E+00	1.270E+06
CO-60	0.000E+00	1.970E+06	0.000E+00	0.000E+00	0.000E+00	3.700E+07	0.000E+00	4.340E+06
NI-63	8.070E+08	5.600E+07	0.000E+00	0.000E+00	0.000E+00	1.170E+07	0.000E+00	2.710E+07
NI-65	4.440E-02	5.770E-03	0.000E+00	0.000E+00	0.000E+00	1.460E-01	0.000E+00	2.630E-03
CU-64	0.000E+00	2.660E+03	0.000E+00	6.700E+03	0.000E+00	2.260E+05	0.000E+00	1.250E+03
ZN-65	1.650E+08	5.240E+08	0.000E+00	3.500E+08	0.000E+00	3.300E+08	0.000E+00	2.370E+08
ZN-69	2.510E-13	4.800E-13	0.000E+00	3.120E-13	0.000E+00	7.210E-14	0.000E+00	3.340E-14
BR-83	0.000E+00	0.000E+00	0.000E+00	0.000E+00	0.000E+00	1.680E-02	0.000E+00	1.170E-02
BR-84	0.000E+00	0.000E+00	0.000E+00	0.000E+00	0.000E+00	1.520E-29	0.000E+00	1.930E-24
BR-85	0.000E+00	0.000E+00	0.000E+00	0.000E+00	0.000E+00	0.000E+00	0.000E+00	0.000E+00
RB-86	0.000E+00	3.110E+08	0.000E+00	0.000E+00	0.000E+00	6.140E+07	0.000E+00	1.450E+08
RB-88	0.000E+00	2.570E-46	0.000E+00	0.000E+00	0.000E+00	3.550E-57	0.000E+00	1.360E-46
RB-89	0.000E+00	5.190E-54	0.000E+00	0.000E+00	0.000E+00	3.020E-67	0.000E+00	3.650E-54
SR-89	3.050E+09	0.000E+00	0.000E+00	0.000E+00	0.000E+00	4.890E+08	0.000E+00	8.750E+07
SR-90	9.830E+10	0.000E+00	0.000E+00	0.000E+00	0.000E+00	2.840E+09	0.000E+00	2.410E+10
SR-91	6.070E+04	0.000E+00	0.000E+00	0.000E+00	0.000E+00	2.890E+05	0.000E+00	2.450E+03

APPENDIX G

R_i Adult Dose Factors for use in the Gaseous Dose Calculations

Agegroup:	ADULT	Pathway:	Grs/Goat/Milk (GMILK)			Units:	m^2·mrem/yr / µCi/sec; mrem/yr / µCi/m^3 (H-3)	
Nuclide	**Bone**	**Liver**	**Thyroid**	**Kidney**	**Lung**	**Gilli**	**Skin**	**Total Body**
SR-92	1.030E+00	0.000E+00	0.000E+00	0.000E+00	0.000E+00	2.030E+01	0.000E+00	4.440E-02
Y-90	8.500E+00	0.000E+00	0.000E+00	0.000E+00	0.000E+00	9.010E+04	0.000E+00	2.280E-01
Y-91	1.030E+03	0.000E+00	0.000E+00	0.000E+00	0.000E+00	5.670E+05	0.000E+00	2.760E+01
Y-91M	7.170E-21	0.000E+00	0.000E+00	0.000E+00	0.000E+00	2.110E-20	0.000E+00	2.780E-22
Y-92	6.690E-06	0.000E+00	0.000E+00	0.000E+00	0.000E+00	1.170E-01	0.000E+00	1.960E-07
Y-93	2.680E-02	0.000E+00	0.000E+00	0.000E+00	0.000E+00	8.500E+02	0.000E+00	7.400E-04
ZR-95	1.130E+02	3.630E+01	0.000E+00	5.700E+01	0.000E+00	1.150E+05	0.000E+00	2.460E+01
ZR-97	5.200E-02	1.050E-02	0.000E+00	1.580E-02	0.000E+00	3.250E+03	0.000E+00	4.800E-03
NB-95	9.910E+03	5.510E+03	0.000E+00	5.450E+03	0.000E+00	3.340E+07	0.000E+00	2.960E+03
MO-99	0.000E+00	2.970E+06	0.000E+00	6.730E+06	0.000E+00	6.890E+06	0.000E+00	5.660E+05
TC-99M	3.980E-01	1.130E+00	0.000E+00	1.710E+01	5.520E-01	6.660E+02	0.000E+00	1.430E+01
TC-101	3.110E-61	4.490E-61	0.000E+00	8.080E-60	2.290E-61	1.350E-72	0.000E+00	4.400E-60
RU-103	1.220E+02	0.000E+00	0.000E+00	4.660E+02	0.000E+00	1.430E+04	0.000E+00	5.260E+01
RU-105	1.030E-04	0.000E+00	0.000E+00	1.330E-03	0.000E+00	6.290E-02	0.000E+00	4.060E-05
RU-106	2.450E+03	0.000E+00	0.000E+00	4.730E+03	0.000E+00	1.580E+05	0.000E+00	3.100E+02
AG-110M	6.990E+06	6.460E+06	0.000E+00	1.270E+07	0.000E+00	2.640E+09	0.000E+00	3.840E+06
TE-125M	1.950E+06	7.080E+05	5.880E+05	7.950E+06	0.000E+00	7.800E+06	0.000E+00	2.620E+05
TE-127	7.830E+01	2.810E+01	5.800E+01	3.190E+02	0.000E+00	6.180E+03	0.000E+00	1.700E+01
TE-127M	5.490E+06	1.960E+06	1.400E+06	2.230E+07	0.000E+00	1.840E+07	0.000E+00	6.690E+05
TE-129	3.390E-11	1.270E-11	2.600E-11	1.430E-10	0.000E+00	2.560E-11	0.000E+00	8.260E-12
TE-129M	7.220E+06	2.690E+06	2.480E+06	3.020E+07	0.000E+00	3.640E+07	0.000E+00	1.140E+06
TE-131	4.320E-34	1.810E-34	3.550E-34	1.890E-33	0.000E+00	6.120E-35	0.000E+00	1.360E-34
TE-131M	4.330E+04	2.120E+04	3.360E+04	2.150E+05	0.000E+00	2.100E+06	0.000E+00	1.770E+04
TE-132	2.880E+05	1.860E+05	2.060E+05	1.800E+06	0.000E+00	8.820E+06	0.000E+00	1.750E+05
I-130	5.040E+05	1.490E+06	1.260E+08	2.320E+06	0.000E+00	1.280E+06	0.000E+00	5.870E+05

APPENDIX G

R_i Adult Dose Factors for use in the Gaseous Dose Calculations

Agegroup:	ADULT	Pathway:	Grs/Goat/Milk (GMILK)			Units:	m^2·mrem/yr / µCi/sec; mrem/yr / µCi/m^3 (H-3)	
Nuclide	**Bone**	**Liver**	**Thyroid**	**Kidney**	**Lung**	**Gilli**	**Skin**	**Total Body**
I-131	3.550E+08	5.080E+08	1.670E+11	8.710E+08	0.000E+00	1.340E+08	0.000E+00	2.910E+08
I-132	1.970E-01	5.270E-01	1.840E+01	8.400E-01	0.000E+00	9.900E-02	0.000E+00	1.840E-01
I-133	4.640E+06	8.080E+06	1.190E+09	1.410E+07	0.000E+00	7.260E+06	0.000E+00	2.460E+06
I-134	2.420E-12	6.570E-12	1.140E-10	1.050E-11	0.000E+00	5.730E-15	0.000E+00	2.350E-12
I-135	1.540E+04	4.030E+04	2.660E+06	6.470E+04	0.000E+00	4.560E+04	0.000E+00	1.490E+04
CS-134	1.700E+10	4.040E+10	0.000E+00	1.310E+10	4.340E+09	7.060E+08	0.000E+00	3.300E+10
CS-136	7.900E+08	3.120E+09	0.000E+00	1.730E+09	2.380E+08	3.540E+08	0.000E+00	2.240E+09
CS-137	2.210E+10	3.030E+10	0.000E+00	1.030E+10	3.420E+09	5.860E+08	0.000E+00	1.980E+10
CS-138	2.710E-23	5.360E-23	0.000E+00	3.940E-23	3.890E-24	2.290E-28	0.000E+00	2.650E-23
BA-139	5.300E-09	3.780E-12	0.000E+00	3.530E-12	2.140E-12	9.400E-09	0.000E+00	1.550E-10
BA-140	3.230E+06	4.050E+03	0.000E+00	1.380E+03	2.320E+03	6.640E+06	0.000E+00	2.110E+05
BA-141	4.910E-47	3.710E-50	0.000E+00	3.450E-50	2.110E-50	2.310E-56	0.000E+00	1.660E-48
BA-142	3.170E-81	3.260E-84	0.000E+00	2.750E-84	1.850E-84	0.000E+00	0.000E+00	2.000E-82
LA-140	5.410E-01	2.730E-01	0.000E+00	0.000E+00	0.000E+00	2.000E+04	0.000E+00	7.210E-02
LA-142	2.230E-12	1.010E-12	0.000E+00	0.000E+00	0.000E+00	7.410E-09	0.000E+00	2.530E-13
CE-141	5.810E+02	3.930E+02	0.000E+00	1.830E+02	0.000E+00	1.500E+06	0.000E+00	4.460E+01
CE-143	4.990E+00	3.690E+03	0.000E+00	1.620E+00	0.000E+00	1.380E+05	0.000E+00	4.080E-01
CE-144	4.290E+04	1.790E+04	0.000E+00	1.060E+04	0.000E+00	1.450E+07	0.000E+00	2.300E+03
PR-143	1.890E+01	7.600E+00	0.000E+00	4.390E+00	0.000E+00	8.300E+04	0.000E+00	9.390E-01
PR-144	7.050E-55	2.930E-55	0.000E+00	1.650E-55	0.000E+00	1.010E-61	0.000E+00	3.580E-56
ND-147	1.130E+01	1.310E+01	0.000E+00	7.630E+00	0.000E+00	6.270E+04	0.000E+00	7.810E-01
W-187	7.820E+02	6.530E+02	0.000E+00	0.000E+00	0.000E+00	2.140E+05	0.000E+00	2.280E+02
NP-239	4.410E-01	4.330E-02	0.000E+00	1.350E-01	0.000E+00	8.890E+03	0.000E+00	2.390E-02

APPENDIX G

R_i Adult Dose Factors for use in the Gaseous Dose Calculations

Agegroup:	ADULT	Pathway:	Grs/Cow/Meat (CMEAT)			Units:	m^2·mrem/yr / µCi/sec; mrem/yr / µCi/m^3 (H-3)	
Nuclide	**Bone**	**Liver**	**Thyroid**	**Kidney**	**Lung**	**Gilli**	**Skin**	**Total Body**
H-3	0.000E+00	3.250E+02	3.250E+02	3.250E+02	3.250E+02	3.250E+02	0.000E+00	3.250E+02
C-14	2.410E+08	4.830E+07	4.830E+07	4.830E+07	4.830E+07	4.830E+07	0.000E+00	4.830E+07
NA-24	1.360E-03	1.360E-03	1.360E-03	1.360E-03	1.360E-03	1.360E-03	0.000E+00	1.360E-03
P-32	4.660E+09	2.900E+08	0.000E+00	0.000E+00	0.000E+00	5.240E+08	0.000E+00	1.800E+08
CR-51	0.000E+00	0.000E+00	4.210E+03	1.550E+03	9.350E+03	1.770E+06	0.000E+00	7.050E+03
MN-54	0.000E+00	9.180E+06	0.000E+00	2.730E+06	0.000E+00	2.810E+07	0.000E+00	1.750E+06
MN-56	0.000E+00	1.320E-53	0.000E+00	1.680E-53	0.000E+00	4.220E-52	0.000E+00	2.350E-54
FE-55	2.930E+08	2.030E+08	0.000E+00	0.000E+00	1.130E+08	1.160E+08	0.000E+00	4.720E+07
FE-59	2.660E+08	6.240E+08	0.000E+00	0.000E+00	1.740E+08	2.080E+09	0.000E+00	2.390E+08
CO-58	0.000E+00	1.820E+07	0.000E+00	0.000E+00	0.000E+00	3.690E+08	0.000E+00	4.090E+07
CO-60	0.000E+00	7.520E+07	0.000E+00	0.000E+00	0.000E+00	1.410E+09	0.000E+00	1.660E+08
NI-63	1.890E+10	1.310E+09	0.000E+00	0.000E+00	0.000E+00	2.730E+08	0.000E+00	6.330E+08
NI-65	2.250E-52	2.920E-53	0.000E+00	0.000E+00	0.000E+00	7.400E-52	0.000E+00	1.330E-53
CU-64	0.000E+00	2.710E-07	0.000E+00	6.830E-07	0.000E+00	2.310E-05	0.000E+00	1.270E-07
ZN-65	3.560E+08	1.130E+09	0.000E+00	7.570E+08	0.000E+00	7.130E+08	0.000E+00	5.120E+08
ZN-69	0.000E+00	0.000E+00	0.000E+00	0.000E+00	0.000E+00	0.000E+00	0.000E+00	0.000E+00
BR-83	0.000E+00	0.000E+00	0.000E+00	0.000E+00	0.000E+00	8.650E-57	0.000E+00	6.000E-57
BR-84	0.000E+00	0.000E+00	0.000E+00	0.000E+00	0.000E+00	0.000E+00	0.000E+00	0.000E+00
BR-85	0.000E+00	0.000E+00	0.000E+00	0.000E+00	0.000E+00	0.000E+00	0.000E+00	0.000E+00
RB-86	0.000E+00	4.870E+08	0.000E+00	0.000E+00	0.000E+00	9.600E+07	0.000E+00	2.270E+08
RB-88	0.000E+00	0.000E+00	0.000E+00	0.000E+00	0.000E+00	0.000E+00	0.000E+00	0.000E+00
RB-89	0.000E+00	0.000E+00	0.000E+00	0.000E+00	0.000E+00	0.000E+00	0.000E+00	0.000E+00
SR-89	3.020E+08	0.000E+00	0.000E+00	0.000E+00	0.000E+00	4.840E+07	0.000E+00	8.660E+06
SR-90	1.240E+10	0.000E+00	0.000E+00	0.000E+00	0.000E+00	3.590E+08	0.000E+00	3.050E+09
SR-91	1.520E-10	0.000E+00	0.000E+00	0.000E+00	0.000E+00	7.240E-10	0.000E+00	6.140E-12

APPENDIX G

R_i Adult Dose Factors for use in the Gaseous Dose Calculations

Agegroup:	ADULT	Pathway:	Grs/Cow/Meat (CMEAT)			Units:	m^2·mrem/yr / µCi/sec; mrem/yr / µCi/m^3 (H-3)	
Nuclide	**Bone**	**Liver**	**Thyroid**	**Kidney**	**Lung**	**Gilli**	**Skin**	**Total Body**
SR-92	1.180E-49	0.000E+00	0.000E+00	0.000E+00	0.000E+00	2.340E-48	0.000E+00	5.100E-51
Y-90	1.080E+02	0.000E+00	0.000E+00	0.000E+00	0.000E+00	1.140E+06	0.000E+00	2.890E+00
Y-91	1.130E+06	0.000E+00	0.000E+00	0.000E+00	0.000E+00	6.230E+08	0.000E+00	3.030E+04
Y-91M	0.000E+00	0.000E+00	0.000E+00	0.000E+00	0.000E+00	0.000E+00	0.000E+00	0.000E+00
Y-92	1.520E-39	0.000E+00	0.000E+00	0.000E+00	0.000E+00	2.660E-35	0.000E+00	4.430E-41
Y-93	4.690E-12	0.000E+00	0.000E+00	0.000E+00	0.000E+00	1.490E-07	0.000E+00	1.300E-13
ZR-95	1.870E+06	6.010E+05	0.000E+00	9.420E+05	0.000E+00	1.900E+09	0.000E+00	4.070E+05
ZR-97	2.070E-05	4.170E-06	0.000E+00	6.300E-06	0.000E+00	1.290E+00	0.000E+00	1.910E-06
NB-95	2.300E+06	1.280E+06	0.000E+00	1.260E+06	0.000E+00	7.760E+09	0.000E+00	6.870E+05
MO-99	0.000E+00	1.000E+05	0.000E+00	2.260E+05	0.000E+00	2.320E+05	0.000E+00	1.900E+04
TC-99M	4.450E-21	1.260E-20	0.000E+00	1.910E-19	6.150E-21	7.430E-18	0.000E+00	1.600E-19
TC-101	0.000E+00	0.000E+00	0.000E+00	0.000E+00	0.000E+00	0.000E+00	0.000E+00	0.000E+00
RU-103	1.050E+08	0.000E+00	0.000E+00	4.010E+08	0.000E+00	1.230E+10	0.000E+00	4.530E+07
RU-105	5.780E-28	0.000E+00	0.000E+00	7.460E-27	0.000E+00	3.530E-25	0.000E+00	2.280E-28
RU-106	2.800E+09	0.000E+00	0.000E+00	5.400E+09	0.000E+00	1.810E+11	0.000E+00	3.540E+08
AG-110M	6.680E+06	6.180E+06	0.000E+00	1.220E+07	0.000E+00	2.520E+09	0.000E+00	3.670E+06
TE-125M	3.590E+08	1.300E+08	1.080E+08	1.460E+09	0.000E+00	1.430E+09	0.000E+00	4.810E+07
TE-127	2.120E-10	7.610E-11	1.570E-10	8.640E-10	0.000E+00	1.670E-08	0.000E+00	4.590E-11
TE-127M	1.120E+09	3.990E+08	2.850E+08	4.530E+09	0.000E+00	3.740E+09	0.000E+00	1.360E+08
TE-129	0.000E+00	0.000E+00	0.000E+00	0.000E+00	0.000E+00	0.000E+00	0.000E+00	0.000E+00
TE-129M	1.130E+09	4.230E+08	3.900E+08	4.730E+09	0.000E+00	5.710E+09	0.000E+00	1.790E+08
TE-131	0.000E+00	0.000E+00	0.000E+00	0.000E+00	0.000E+00	0.000E+00	0.000E+00	0.000E+00
TE-131M	4.510E+02	2.210E+02	3.490E+02	2.230E+03	0.000E+00	2.190E+04	0.000E+00	1.840E+02
TE-132	1.420E+06	9.180E+05	1.010E+06	8.840E+06	0.000E+00	4.340E+07	0.000E+00	8.620E+05
I-130	2.110E-06	6.220E-06	5.270E-04	9.700E-06	0.000E+00	5.350E-06	0.000E+00	2.450E-06

APPENDIX G

R_i Adult Dose Factors for use in the Gaseous Dose Calculations

Agegroup:	ADULT	Pathway:	Grs/Cow/Meat (CMEAT)			Units:	m^2·mrem/yr / µCi/sec; mrem/yr / µCi/m^3 (H-3)	
Nuclide	**Bone**	**Liver**	**Thyroid**	**Kidney**	**Lung**	**Gilli**	**Skin**	**Total Body**
I-131	1.070E+07	1.540E+07	5.030E+09	2.630E+07	0.000E+00	4.050E+06	0.000E+00	8.800E+06
I-132	6.970E-59	1.860E-58	6.530E-57	2.970E-58	0.000E+00	3.500E-59	0.000E+00	6.530E-59
I-133	3.650E-01	6.350E-01	9.340E+01	1.110E+00	0.000E+00	5.710E-01	0.000E+00	1.940E-01
I-134	0.000E+00	0.000E+00	0.000E+00	0.000E+00	0.000E+00	0.000E+00	0.000E+00	0.000E+00
I-135	4.420E-17	1.160E-16	7.640E-15	1.860E-16	0.000E+00	1.310E-16	0.000E+00	4.270E-17
CS-134	6.580E+08	1.560E+09	0.000E+00	5.060E+08	1.680E+08	2.740E+07	0.000E+00	1.280E+09
CS-136	1.210E+07	4.760E+07	0.000E+00	2.650E+07	3.630E+06	5.410E+06	0.000E+00	3.420E+07
CS-137	8.720E+08	1.190E+09	0.000E+00	4.050E+08	1.350E+08	2.310E+07	0.000E+00	7.810E+08
CS-138	0.000E+00	0.000E+00	0.000E+00	0.000E+00	0.000E+00	0.000E+00	0.000E+00	0.000E+00
BA-139	0.000E+00	0.000E+00	0.000E+00	0.000E+00	0.000E+00	0.000E+00	0.000E+00	0.000E+00
BA-140	2.870E+07	3.610E+04	0.000E+00	1.230E+04	2.070E+04	5.920E+07	0.000E+00	1.880E+06
BA-141	0.000E+00	0.000E+00	0.000E+00	0.000E+00	0.000E+00	0.000E+00	0.000E+00	0.000E+00
BA-142	0.000E+00	0.000E+00	0.000E+00	0.000E+00	0.000E+00	0.000E+00	0.000E+00	0.000E+00
LA-140	3.710E-02	1.870E-02	0.000E+00	0.000E+00	0.000E+00	1.370E+03	0.000E+00	4.940E-03
LA-142	3.470E-92	1.580E-92	0.000E+00	0.000E+00	0.000E+00	1.150E-88	0.000E+00	3.940E-93
CE-141	1.400E+04	9.500E+03	0.000E+00	4.410E+03	0.000E+00	3.630E+07	0.000E+00	1.080E+03
CE-143	2.010E-02	1.480E+01	0.000E+00	6.530E-03	0.000E+00	5.550E+02	0.000E+00	1.640E-03
CE-144	1.460E+06	6.090E+05	0.000E+00	3.610E+05	0.000E+00	4.930E+08	0.000E+00	7.830E+04
PR-143	2.100E+04	8.410E+03	0.000E+00	4.850E+03	0.000E+00	9.180E+07	0.000E+00	1.040E+03
PR-144	0.000E+00	0.000E+00	0.000E+00	0.000E+00	0.000E+00	0.000E+00	0.000E+00	0.000E+00
ND-147	7.070E+03	8.170E+03	0.000E+00	4.780E+03	0.000E+00	3.920E+07	0.000E+00	4.890E+02
W-187	2.070E-02	1.730E-02	0.000E+00	0.000E+00	0.000E+00	5.660E+00	0.000E+00	6.040E-03
NP-239	2.590E-01	2.550E-02	0.000E+00	7.950E-02	0.000E+00	5.230E+03	0.000E+00	1.400E-02

APPENDIX G

R_i Adult Dose Factors for use in the Gaseous Dose Calculations

Agegroup:	ADULT	Pathway:	Vegetation (VEG)			Units:	m^2·mrem/yr / µCi/sec; mrem/yr / µCi/m^3 (H-3)	
Nuclide	**Bone**	**Liver**	**Thyroid**	**Kidney**	**Lung**	**Gilli**	**Skin**	**Total Body**
H-3	0.000E+00	2.260E+03	2.260E+03	2.260E+03	2.260E+03	2.260E+03	0.000E+00	2.260E+03
C-14	2.280E+08	4.550E+07	4.550E+07	4.550E+07	4.550E+07	4.550E+07	0.000E+00	4.550E+07
NA-24	2.690E+05	2.690E+05	2.690E+05	2.690E+05	2.690E+05	2.690E+05	0.000E+00	2.690E+05
P-32	1.400E+09	8.730E+07	0.000E+00	0.000E+00	0.000E+00	1.580E+08	0.000E+00	5.430E+07
CR-51	0.000E+00	0.000E+00	2.780E+04	1.020E+04	6.160E+04	1.170E+07	0.000E+00	4.640E+04
MN-54	0.000E+00	3.130E+08	0.000E+00	9.310E+07	0.000E+00	9.590E+08	0.000E+00	5.970E+07
MN-56	0.000E+00	1.580E+01	0.000E+00	2.000E+01	0.000E+00	5.040E+02	0.000E+00	2.800E+00
FE-55	2.100E+08	1.450E+08	0.000E+00	0.000E+00	8.080E+07	8.310E+07	0.000E+00	3.380E+07
FE-59	1.260E+08	2.960E+08	0.000E+00	0.000E+00	8.280E+07	9.880E+08	0.000E+00	1.140E+08
CO-58	0.000E+00	3.070E+07	0.000E+00	0.000E+00	0.000E+00	6.230E+08	0.000E+00	6.890E+07
CO-60	0.000E+00	1.670E+08	0.000E+00	0.000E+00	0.000E+00	3.140E+09	0.000E+00	3.690E+08
NI-63	1.040E+10	7.210E+08	0.000E+00	0.000E+00	0.000E+00	1.500E+08	0.000E+00	3.490E+08
NI-65	6.150E+01	7.990E+00	0.000E+00	0.000E+00	0.000E+00	2.030E+02	0.000E+00	3.640E+00
CU-64	0.000E+00	9.200E+03	0.000E+00	2.320E+04	0.000E+00	7.840E+05	0.000E+00	4.320E+03
ZN-65	3.170E+08	1.010E+09	0.000E+00	6.750E+08	0.000E+00	6.360E+08	0.000E+00	4.560E+08
ZN-69	5.490E-06	1.050E-05	0.000E+00	6.830E-06	0.000E+00	1.580E-06	0.000E+00	7.310E-07
BR-83	0.000E+00	0.000E+00	0.000E+00	0.000E+00	0.000E+00	4.470E+00	0.000E+00	3.110E+00
BR-84	0.000E+00	0.000E+00	0.000E+00	0.000E+00	0.000E+00	1.940E-16	0.000E+00	2.480E-11
BR-85	0.000E+00	0.000E+00	0.000E+00	0.000E+00	0.000E+00	0.000E+00	0.000E+00	0.000E+00
RB-86	0.000E+00	2.190E+08	0.000E+00	0.000E+00	0.000E+00	4.330E+07	0.000E+00	1.020E+08
RB-88	0.000E+00	3.430E-22	0.000E+00	0.000E+00	0.000E+00	4.740E-33	0.000E+00	1.820E-22
RB-89	0.000E+00	3.890E-26	0.000E+00	0.000E+00	0.000E+00	2.260E-39	0.000E+00	2.730E-26
SR-89	9.970E+09	0.000E+00	0.000E+00	0.000E+00	0.000E+00	1.600E+09	0.000E+00	2.860E+08
SR-90	6.050E+11	0.000E+00	0.000E+00	0.000E+00	0.000E+00	1.750E+10	0.000E+00	1.480E+11
SR-91	3.050E+05	0.000E+00	0.000E+00	0.000E+00	0.000E+00	1.450E+06	0.000E+00	1.230E+04

APPENDIX G

R_i Adult Dose Factors for use in the Gaseous Dose Calculations

Agegroup:	ADULT	Pathway:	Vegetation (VEG)			Units:	m^2·mrem/yr / µCi/sec; mrem/yr / µCi/m^3 (H-3)	
Nuclide	**Bone**	**Liver**	**Thyroid**	**Kidney**	**Lung**	**Gilli**	**Skin**	**Total Body**
SR-92	4.270E+02	0.000E+00	0.000E+00	0.000E+00	0.000E+00	8.450E+03	0.000E+00	1.850E+01
Y-90	1.330E+04	0.000E+00	0.000E+00	0.000E+00	0.000E+00	1.410E+08	0.000E+00	3.570E+02
Y-91	5.110E+06	0.000E+00	0.000E+00	0.000E+00	0.000E+00	2.810E+09	0.000E+00	1.370E+05
Y-91M	5.220E-09	0.000E+00	0.000E+00	0.000E+00	0.000E+00	1.530E-08	0.000E+00	2.020E-10
Y-92	9.150E-01	0.000E+00	0.000E+00	0.000E+00	0.000E+00	1.600E+04	0.000E+00	2.680E-02
Y-93	1.700E+02	0.000E+00	0.000E+00	0.000E+00	0.000E+00	5.380E+06	0.000E+00	4.680E+00
ZR-95	1.170E+06	3.770E+05	0.000E+00	5.910E+05	0.000E+00	1.190E+09	0.000E+00	2.550E+05
ZR-97	3.370E+02	6.810E+01	0.000E+00	1.030E+02	0.000E+00	2.110E+07	0.000E+00	3.110E+01
NB-95	1.420E+05	7.920E+04	0.000E+00	7.830E+04	0.000E+00	4.810E+08	0.000E+00	4.260E+04
MO-99	0.000E+00	6.150E+06	0.000E+00	1.390E+07	0.000E+00	1.430E+07	0.000E+00	1.170E+06
TC-99M	3.100E+00	8.770E+00	0.000E+00	1.330E+02	4.300E+00	5.190E+03	0.000E+00	1.120E+02
TC-101	8.220E-31	1.180E-30	0.000E+00	2.130E-29	6.050E-31	3.560E-42	0.000E+00	1.160E-29
RU-103	4.770E+06	0.000E+00	0.000E+00	1.820E+07	0.000E+00	5.570E+08	0.000E+00	2.060E+06
RU-105	5.390E+01	0.000E+00	0.000E+00	6.960E+02	0.000E+00	3.290E+04	0.000E+00	2.130E+01
RU-106	1.930E+08	0.000E+00	0.000E+00	3.720E+08	0.000E+00	1.250E+10	0.000E+00	2.440E+07
AG-110M	1.050E+07	9.750E+06	0.000E+00	1.920E+07	0.000E+00	3.980E+09	0.000E+00	5.790E+06
TE-125M	9.660E+07	3.500E+07	2.900E+07	3.930E+08	0.000E+00	3.860E+08	0.000E+00	1.290E+07
TE-127	5.660E+03	2.030E+03	4.190E+03	2.310E+04	0.000E+00	4.470E+05	0.000E+00	1.220E+03
TE-127M	3.490E+08	1.250E+08	8.920E+07	1.420E+09	0.000E+00	1.170E+09	0.000E+00	4.260E+07
TE-129	7.630E-04	2.870E-04	5.850E-04	3.210E-03	0.000E+00	5.760E-04	0.000E+00	1.860E-04
TE-129M	2.510E+08	9.380E+07	8.630E+07	1.050E+09	0.000E+00	1.270E+09	0.000E+00	3.980E+07
TE-131	1.500E-15	6.270E-16	1.230E-15	6.570E-15	0.000E+00	2.130E-16	0.000E+00	4.740E-16
TE-131M	9.120E+05	4.460E+05	7.060E+05	4.520E+06	0.000E+00	4.430E+07	0.000E+00	3.720E+05
TE-132	4.300E+06	2.780E+06	3.070E+06	2.680E+07	0.000E+00	1.320E+08	0.000E+00	2.610E+06
I-130	3.920E+05	1.160E+06	9.810E+07	1.810E+06	0.000E+00	9.960E+05	0.000E+00	4.570E+05

APPENDIX G

R_i Adult Dose Factors for use in the Gaseous Dose Calculations

Agegroup:	ADULT	Pathway:	Vegetation (VEG)			Units:	m^2·mrem/yr / µCi/sec; mrem/yr / µCi/m^3 (H-3)	
Nuclide	**Bone**	**Liver**	**Thyroid**	**Kidney**	**Lung**	**Gilli**	**Skin**	**Total Body**
I-131	8.080E+07	1.160E+08	3.790E+10	1.980E+08	0.000E+00	3.050E+07	0.000E+00	6.620E+07
I-132	5.760E+01	1.540E+02	5.390E+03	2.450E+02	0.000E+00	2.890E+01	0.000E+00	5.390E+01
I-133	2.090E+06	3.630E+06	5.330E+08	6.330E+06	0.000E+00	3.260E+06	0.000E+00	1.110E+06
I-134	9.650E-05	2.620E-04	4.540E-03	4.170E-04	0.000E+00	2.290E-07	0.000E+00	9.380E-05
I-135	3.900E+04	1.020E+05	6.730E+06	1.640E+05	0.000E+00	1.150E+05	0.000E+00	3.770E+04
CS-134	4.670E+09	1.110E+10	0.000E+00	3.590E+09	1.190E+09	1.940E+08	0.000E+00	9.080E+09
CS-136	4.270E+07	1.680E+08	0.000E+00	9.380E+07	1.290E+07	1.910E+07	0.000E+00	1.210E+08
CS-137	6.360E+09	8.700E+09	0.000E+00	2.950E+09	9.810E+08	1.680E+08	0.000E+00	5.700E+09
CS-138	3.920E-11	7.730E-11	0.000E+00	5.680E-11	5.610E-12	3.300E-16	0.000E+00	3.830E-11
BA-139	2.860E-02	2.030E-05	0.000E+00	1.900E-05	1.150E-05	5.060E-02	0.000E+00	8.360E-04
BA-140	1.280E+08	1.610E+05	0.000E+00	5.490E+04	9.240E+04	2.650E+08	0.000E+00	8.420E+06
BA-141	1.150E-21	8.700E-25	0.000E+00	8.090E-25	4.940E-25	5.430E-31	0.000E+00	3.890E-23
BA-142	5.960E-39	6.120E-42	0.000E+00	5.170E-42	3.470E-42	8.390E-57	0.000E+00	3.750E-40
LA-140	1.980E+03	9.970E+02	0.000E+00	0.000E+00	0.000E+00	7.320E+07	0.000E+00	2.630E+02
LA-142	2.020E-04	9.190E-05	0.000E+00	0.000E+00	0.000E+00	6.710E-01	0.000E+00	2.290E-05
CE-141	1.970E+05	1.330E+05	0.000E+00	6.190E+04	0.000E+00	5.100E+08	0.000E+00	1.510E+04
CE-143	9.980E+02	7.380E+05	0.000E+00	3.250E+02	0.000E+00	2.760E+07	0.000E+00	8.160E+01
CE-144	3.290E+07	1.380E+07	0.000E+00	8.160E+06	0.000E+00	1.110E+10	0.000E+00	1.770E+06
PR-143	6.260E+04	2.510E+04	0.000E+00	1.450E+04	0.000E+00	2.740E+08	0.000E+00	3.100E+03
PR-144	3.090E-26	1.280E-26	0.000E+00	7.230E-27	0.000E+00	4.440E-33	0.000E+00	1.570E-27
ND-147	3.330E+04	3.850E+04	0.000E+00	2.250E+04	0.000E+00	1.850E+08	0.000E+00	2.310E+03
W-187	3.800E+04	3.180E+04	0.000E+00	0.000E+00	0.000E+00	1.040E+07	0.000E+00	1.110E+04
NP-239	1.430E+03	1.400E+02	0.000E+00	4.380E+02	0.000E+00	2.880E+07	0.000E+00	7.740E+01

APPENDIX G

R_i Adult Dose Factors for use in the Gaseous Dose Calculations

Agegroup:	ADULT	Pathway:	Inhalation (INHL)			Units:	mrem/yr / µCi/m^3	
Nuclide	**Bone**	**Liver**	**Thyroid**	**Kidney**	**Lung**	**Gilli**	**Skin**	**Total Body**
H-3	0.000E+00	1.260E+03	1.260E+03	1.260E+03	1.260E+03	1.260E+03	0.000E+00	1.260E+03
C-14	1.820E+04	3.410E+03	3.410E+03	3.410E+03	3.410E+03	3.410E+03	0.000E+00	3.410E+03
NA-24	1.020E+04	1.020E+04	1.020E+04	1.020E+04	1.020E+04	1.020E+04	0.000E+00	1.020E+04
P-32	1.320E+06	7.710E+04	0.000E+00	0.000E+00	0.000E+00	8.640E+04	0.000E+00	5.010E+04
CR-51	0.000E+00	0.000E+00	5.950E+01	2.280E+01	1.440E+04	3.320E+03	0.000E+00	1.000E+02
MN-54	0.000E+00	3.960E+04	0.000E+00	9.840E+03	1.400E+06	7.740E+04	0.000E+00	6.300E+03
MN-56	0.000E+00	1.240E+00	0.000E+00	1.300E+00	9.440E+03	2.020E+04	0.000E+00	1.830E-01
FE-55	2.460E+04	1.700E+04	0.000E+00	0.000E+00	7.210E+04	6.030E+03	0.000E+00	3.940E+03
FE-59	1.180E+04	2.780E+04	0.000E+00	0.000E+00	1.020E+06	1.880E+05	0.000E+00	1.060E+04
CO-58	0.000E+00	1.580E+03	0.000E+00	0.000E+00	9.280E+05	1.060E+05	0.000E+00	2.070E+03
CO-60	0.000E+00	1.150E+04	0.000E+00	0.000E+00	5.970E+06	2.850E+05	0.000E+00	1.480E+04
NI-63	4.320E+05	3.140E+04	0.000E+00	0.000E+00	1.780E+05	1.340E+04	0.000E+00	1.450E+04
NI-65	1.540E+00	2.100E-01	0.000E+00	0.000E+00	5.600E+03	1.230E+04	0.000E+00	9.120E-02
CU-64	0.000E+00	1.460E+00	0.000E+00	4.620E+00	6.780E+03	4.900E+04	0.000E+00	6.150E-01
ZN-65	3.240E+04	1.030E+05	0.000E+00	6.900E+04	8.640E+05	5.340E+04	0.000E+00	4.660E+04
ZN-69	3.380E-02	6.510E-02	0.000E+00	4.220E-02	9.200E+02	1.630E+01	0.000E+00	4.520E-03
BR-83	0.000E+00	0.000E+00	0.000E+00	0.000E+00	0.000E+00	2.320E+02	0.000E+00	2.410E+02
BR-84	0.000E+00	0.000E+00	0.000E+00	0.000E+00	0.000E+00	1.640E-03	0.000E+00	3.130E+02
BR-85	0.000E+00	0.000E+00	0.000E+00	0.000E+00	0.000E+00	0.000E+00	0.000E+00	1.280E+01
RB-86	0.000E+00	1.350E+05	0.000E+00	0.000E+00	0.000E+00	1.660E+04	0.000E+00	5.900E+04
RB-88	0.000E+00	3.870E+02	0.000E+00	0.000E+00	0.000E+00	3.340E-09	0.000E+00	1.930E+02
RB-89	0.000E+00	2.560E+02	0.000E+00	0.000E+00	0.000E+00	9.280E-12	0.000E+00	1.700E+02
SR-89	3.040E+05	0.000E+00	0.000E+00	0.000E+00	1.400E+06	3.500E+05	0.000E+00	8.720E+03
SR-90	9.920E+07	0.000E+00	0.000E+00	0.000E+00	9.600E+06	7.220E+05	0.000E+00	6.100E+06
SR-91	6.190E+01	0.000E+00	0.000E+00	0.000E+00	3.650E+04	1.910E+05	0.000E+00	2.500E+00

APPENDIX G

R_i Adult Dose Factors for use in the Gaseous Dose Calculations

Agegroup:	ADULT	Pathway:	Inhalation (INHL)			Units:	mrem/yr / µCi/m^3	
Nuclide	**Bone**	**Liver**	**Thyroid**	**Kidney**	**Lung**	**Gilli**	**Skin**	**Total Body**
SR-92	6.740E+00	0.000E+00	0.000E+00	0.000E+00	1.650E+04	4.300E+04	0.000E+00	2.910E-01
Y-90	2.090E+03	0.000E+00	0.000E+00	0.000E+00	1.700E+05	5.060E+05	0.000E+00	5.610E+01
Y-91	4.620E+05	0.000E+00	0.000E+00	0.000E+00	1.700E+06	3.850E+05	0.000E+00	1.240E+04
Y-91M	2.610E-01	0.000E+00	0.000E+00	0.000E+00	1.920E+03	1.330E+00	0.000E+00	1.020E-02
Y-92	1.030E+01	0.000E+00	0.000E+00	0.000E+00	1.570E+04	7.350E+04	0.000E+00	3.020E-01
Y-93	9.440E+01	0.000E+00	0.000E+00	0.000E+00	4.850E+04	4.220E+05	0.000E+00	2.610E+00
ZR-95	1.070E+05	3.440E+04	0.000E+00	5.420E+04	1.770E+06	1.500E+05	0.000E+00	2.330E+04
ZR-97	9.680E+01	1.960E+01	0.000E+00	2.970E+01	7.870E+04	5.230E+05	0.000E+00	9.040E+00
NB-95	1.410E+04	7.820E+03	0.000E+00	7.740E+03	5.050E+05	1.040E+05	0.000E+00	4.210E+03
MO-99	0.000E+00	1.210E+02	0.000E+00	2.910E+02	9.120E+04	2.480E+05	0.000E+00	2.300E+01
TC-99M	1.030E-03	2.910E-03	0.000E+00	4.420E-02	7.640E+02	4.160E+03	0.000E+00	3.700E-02
TC-101	4.180E-05	6.020E-05	0.000E+00	1.080E-03	3.990E+02	1.090E-11	0.000E+00	5.900E-04
RU-103	1.530E+03	0.000E+00	0.000E+00	5.830E+03	5.050E+05	1.100E+05	0.000E+00	6.580E+02
RU-105	7.900E-01	0.000E+00	0.000E+00	1.020E+00	1.100E+04	4.820E+04	0.000E+00	3.110E-01
RU-106	6.910E+04	0.000E+00	0.000E+00	1.340E+05	9.360E+06	9.120E+05	0.000E+00	8.720E+03
AG-110M	1.080E+04	1.000E+04	0.000E+00	1.970E+04	4.630E+06	3.020E+05	0.000E+00	5.940E+03
TE-125M	3.420E+03	1.580E+03	1.050E+03	1.240E+04	3.140E+05	7.060E+04	0.000E+00	4.670E+02
TE-127	1.400E+00	6.420E-01	1.060E+00	5.100E+00	6.510E+03	5.740E+04	0.000E+00	3.100E-01
TE-127M	1.260E+04	5.770E+03	3.290E+03	4.580E+04	9.600E+05	1.500E+05	0.000E+00	1.570E+03
TE-129	4.980E-02	2.390E-02	3.900E-02	1.870E-01	1.940E+03	1.570E+02	0.000E+00	1.240E-02
TE-129M	9.760E+03	4.670E+03	3.440E+03	3.660E+04	1.160E+06	3.830E+05	0.000E+00	1.580E+03
TE-131	1.110E-02	5.950E-03	9.360E-03	4.370E-02	1.390E+03	1.840E+01	0.000E+00	3.590E-03
TE-131M	6.990E+01	4.360E+01	5.500E+01	3.090E+02	1.460E+05	5.560E+05	0.000E+00	2.900E+01
TE-132	2.600E+02	2.150E+02	1.900E+02	1.460E+03	2.880E+05	5.100E+05	0.000E+00	1.620E+02
I-130	4.580E+03	1.340E+04	1.140E+06	2.090E+04	0.000E+00	7.690E+03	0.000E+00	5.280E+03

APPENDIX G

R_i Adult Dose Factors for use in the Gaseous Dose Calculations

Agegroup:	ADULT	Pathway:	Inhalation (INHL)			Units:	mrem/yr / µCi/m^3	
Nuclide	**Bone**	**Liver**	**Thyroid**	**Kidney**	**Lung**	**Gilli**	**Skin**	**Total Body**
I-131	2.520E+04	3.580E+04	1.190E+07	6.130E+04	0.000E+00	6.280E+03	0.000E+00	2.050E+04
I-132	1.160E+03	3.260E+03	1.140E+05	5.180E+03	0.000E+00	4.060E+02	0.000E+00	1.160E+03
I-133	8.640E+03	1.480E+04	2.150E+06	2.580E+04	0.000E+00	8.880E+03	0.000E+00	4.520E+03
I-134	6.440E+02	1.730E+03	2.980E+04	2.750E+03	0.000E+00	1.010E+00	0.000E+00	6.150E+02
I-135	2.680E+03	6.980E+03	4.480E+05	1.110E+04	0.000E+00	5.250E+03	0.000E+00	2.570E+03
CS-134	3.730E+05	8.480E+05	0.000E+00	2.870E+05	9.760E+04	1.040E+04	0.000E+00	7.280E+05
CS-136	3.900E+04	1.460E+05	0.000E+00	8.560E+04	1.200E+04	1.170E+04	0.000E+00	1.100E+05
CS-137	4.780E+05	6.210E+05	0.000E+00	2.220E+05	7.520E+04	8.400E+03	0.000E+00	4.280E+05
CS-138	3.310E+02	6.210E+02	0.000E+00	4.800E+02	4.860E+01	1.860E-03	0.000E+00	3.240E+02
BA-139	9.360E-01	6.660E-04	0.000E+00	6.220E-04	3.760E+03	8.960E+02	0.000E+00	2.740E-02
BA-140	3.900E+04	4.900E+01	0.000E+00	1.670E+01	1.270E+06	2.180E+05	0.000E+00	2.570E+03
BA-141	1.000E-01	7.530E-05	0.000E+00	7.000E-05	1.940E+03	1.160E-07	0.000E+00	3.360E-03
BA-142	2.630E-02	2.700E-05	0.000E+00	2.290E-05	1.190E+03	1.570E-16	0.000E+00	1.660E-03
LA-140	3.440E+02	1.740E+02	0.000E+00	0.000E+00	1.360E+05	4.580E+05	0.000E+00	4.580E+01
LA-142	6.830E-01	3.100E-01	0.000E+00	0.000E+00	6.330E+03	2.110E+03	0.000E+00	7.720E-02
CE-141	1.990E+04	1.350E+04	0.000E+00	6.260E+03	3.620E+05	1.200E+05	0.000E+00	1.530E+03
CE-143	1.860E+02	1.380E+02	0.000E+00	6.080E+01	7.980E+04	2.260E+05	0.000E+00	1.530E+01
CE-144	3.430E+06	1.430E+06	0.000E+00	8.480E+05	7.780E+06	8.160E+05	0.000E+00	1.840E+05
PR-143	9.360E+03	3.750E+03	0.000E+00	2.160E+03	2.810E+05	2.000E+05	0.000E+00	4.640E+02
PR-144	3.010E-02	1.250E-02	0.000E+00	7.050E-03	1.020E+03	2.150E-08	0.000E+00	1.530E-03
ND-147	5.270E+03	6.100E+03	0.000E+00	3.560E+03	2.210E+05	1.730E+05	0.000E+00	3.650E+02
W-187	8.480E+00	7.080E+00	0.000E+00	0.000E+00	2.900E+04	1.550E+05	0.000E+00	2.480E+00
NP-239	2.300E+02	2.260E+01	0.000E+00	7.000E+01	3.760E+04	1.190E+05	0.000E+00	1.240E+01

APPENDIX G

R_i Adult Dose Factors for use in the Gaseous Dose Calculations

Agegroup:	ADULT	Pathway:	Ground Plane Deposition (GPD)			Units:	m^2·mrem/yr / µCi/sec	
Nuclide	**Bone**	**Liver**	**Thyroid**	**Kidney**	**Lung**	**Gilli**	**Skin**	**Total Body**
H-3	0.000E+00	0.000E+00	0.000E+00	0.000E+00	0.000E+00	0.000E+00	0.000E+00	0.000E+00
C-14	0.000E+00	0.000E+00	0.000E+00	0.000E+00	0.000E+00	0.000E+00	0.000E+00	0.000E+00
NA-24	1.190E+07	1.190E+07	1.190E+07	1.190E+07	1.190E+07	1.190E+07	1.390E+07	1.190E+07
P-32	0.000E+00	0.000E+00	0.000E+00	0.000E+00	0.000E+00	0.000E+00	0.000E+00	0.000E+00
CR-51	4.660E+06	4.660E+06	4.660E+06	4.660E+06	4.660E+06	4.660E+06	5.510E+06	4.660E+06
MN-54	1.390E+09	1.390E+09	1.390E+09	1.390E+09	1.390E+09	1.390E+09	1.630E+09	1.390E+09
MN-56	9.020E+05	9.020E+05	9.020E+05	9.020E+05	9.020E+05	9.020E+05	1.070E+06	9.020E+05
FE-55	0.000E+00	0.000E+00	0.000E+00	0.000E+00	0.000E+00	0.000E+00	0.000E+00	0.000E+00
FE-59	2.730E+08	2.730E+08	2.730E+08	2.730E+08	2.730E+08	2.730E+08	3.210E+08	2.730E+08
CO-58	3.790E+08	3.790E+08	3.790E+08	3.790E+08	3.790E+08	3.790E+08	4.440E+08	3.790E+08
CO-60	2.150E+10	2.150E+10	2.150E+10	2.150E+10	2.150E+10	2.150E+10	2.530E+10	2.150E+10
NI-63	0.000E+00	0.000E+00	0.000E+00	0.000E+00	0.000E+00	0.000E+00	0.000E+00	0.000E+00
NI-65	2.970E+05	2.970E+05	2.970E+05	2.970E+05	2.970E+05	2.970E+05	3.450E+05	2.970E+05
CU-64	6.070E+05	6.070E+05	6.070E+05	6.070E+05	6.070E+05	6.070E+05	6.880E+05	6.070E+05
ZN-65	7.470E+08	7.470E+08	7.470E+08	7.470E+08	7.470E+08	7.470E+08	8.590E+08	7.470E+08
ZN-69	0.000E+00	0.000E+00	0.000E+00	0.000E+00	0.000E+00	0.000E+00	0.000E+00	0.000E+00
BR-83	4.870E+03	4.870E+03	4.870E+03	4.870E+03	4.870E+03	4.870E+03	7.080E+03	4.870E+03
BR-84	2.030E+05	2.030E+05	2.030E+05	2.030E+05	2.030E+05	2.030E+05	2.360E+05	2.030E+05
BR-85	0.000E+00	0.000E+00	0.000E+00	0.000E+00	0.000E+00	0.000E+00	0.000E+00	0.000E+00
RB-86	8.990E+06	8.990E+06	8.990E+06	8.990E+06	8.990E+06	8.990E+06	1.030E+07	8.990E+06
RB-88	3.310E+04	3.310E+04	3.310E+04	3.310E+04	3.310E+04	3.310E+04	3.780E+04	3.310E+04
RB-89	1.230E+05	1.230E+05	1.230E+05	1.230E+05	1.230E+05	1.230E+05	1.480E+05	1.230E+05
SR-89	2.160E+04	2.160E+04	2.160E+04	2.160E+04	2.160E+04	2.160E+04	2.510E+04	2.160E+04
SR-90	0.000E+00	0.000E+00	0.000E+00	0.000E+00	0.000E+00	0.000E+00	0.000E+00	0.000E+00
SR-91	2.150E+06	2.150E+06	2.150E+06	2.150E+06	2.150E+06	2.150E+06	2.510E+06	2.150E+06

APPENDIX G

R_i Adult Dose Factors for use in the Gaseous Dose Calculations

Agegroup:	ADULT	Pathway:	Ground Plane Deposition (GPD)			Units:	m^2·mrem/yr / µCi/sec	
Nuclide	**Bone**	**Liver**	**Thyroid**	**Kidney**	**Lung**	**Gilli**	**Skin**	**Total Body**
SR-92	7.770E+05	7.770E+05	7.770E+05	7.770E+05	7.770E+05	7.770E+05	8.630E+05	7.770E+05
Y-90	4.490E+03	4.490E+03	4.490E+03	4.490E+03	4.490E+03	4.490E+03	5.310E+03	4.490E+03
Y-91	1.070E+06	1.070E+06	1.070E+06	1.070E+06	1.070E+06	1.070E+06	1.210E+06	1.070E+06
Y-91M	1.000E+05	1.000E+05	1.000E+05	1.000E+05	1.000E+05	1.000E+05	1.160E+05	1.000E+05
Y-92	1.800E+05	1.800E+05	1.800E+05	1.800E+05	1.800E+05	1.800E+05	2.140E+05	1.800E+05
Y-93	1.830E+05	1.830E+05	1.830E+05	1.830E+05	1.830E+05	1.830E+05	2.510E+05	1.830E+05
ZR-95	2.450E+08	2.450E+08	2.450E+08	2.450E+08	2.450E+08	2.450E+08	2.840E+08	2.450E+08
ZR-97	2.960E+06	2.960E+06	2.960E+06	2.960E+06	2.960E+06	2.960E+06	3.440E+06	2.960E+06
NB-95	1.370E+08	1.370E+08	1.370E+08	1.370E+08	1.370E+08	1.370E+08	1.610E+08	1.370E+08
MO-99	3.990E+06	3.990E+06	3.990E+06	3.990E+06	3.990E+06	3.990E+06	4.630E+06	3.990E+06
TC-99M	1.840E+05	1.840E+05	1.840E+05	1.840E+05	1.840E+05	1.840E+05	2.110E+05	1.840E+05
TC-101	2.040E+04	2.040E+04	2.040E+04	2.040E+04	2.040E+04	2.040E+04	2.260E+04	2.040E+04
RU-103	1.080E+08	1.080E+08	1.080E+08	1.080E+08	1.080E+08	1.080E+08	1.260E+08	1.080E+08
RU-105	6.360E+05	6.360E+05	6.360E+05	6.360E+05	6.360E+05	6.360E+05	7.210E+05	6.360E+05
RU-106	4.220E+08	4.220E+08	4.220E+08	4.220E+08	4.220E+08	4.220E+08	5.070E+08	4.220E+08
AG-110M	3.440E+09	3.440E+09	3.440E+09	3.440E+09	3.440E+09	3.440E+09	4.010E+09	3.440E+09
TE-125M	1.550E+06	1.550E+06	1.550E+06	1.550E+06	1.550E+06	1.550E+06	2.130E+06	1.550E+06
TE-127	2.980E+03	2.980E+03	2.980E+03	2.980E+03	2.980E+03	2.980E+03	3.280E+03	2.980E+03
TE-127M	9.160E+04	9.160E+04	9.160E+04	9.160E+04	9.160E+04	9.160E+04	1.080E+05	9.160E+04
TE-129	2.620E+04	2.620E+04	2.620E+04	2.620E+04	2.620E+04	2.620E+04	3.100E+04	2.620E+04
TE-129M	1.980E+07	1.980E+07	1.980E+07	1.980E+07	1.980E+07	1.980E+07	2.310E+07	1.980E+07
TE-131	2.920E+04	2.920E+04	2.920E+04	2.920E+04	2.920E+04	2.920E+04	3.450E+07	2.920E+04
TE-131M	8.030E+06	8.030E+06	8.030E+06	8.030E+06	8.030E+06	8.030E+06	9.460E+06	8.030E+06
TE-132	4.230E+06	4.230E+06	4.230E+06	4.230E+06	4.230E+06	4.230E+06	4.980E+06	4.230E+06
I-130	5.510E+06	5.510E+06	5.510E+06	5.510E+06	5.510E+06	5.510E+06	6.690E+06	5.510E+06

APPENDIX G

R_i Adult Dose Factors for use in the Gaseous Dose Calculations

Agegroup:	ADULT	Pathway:	Ground Plane Deposition (GPD)			Units:	m^2·mrem/yr / µCi/sec	
Nuclide	**Bone**	**Liver**	**Thyroid**	**Kidney**	**Lung**	**Gilli**	**Skin**	**Total Body**
I-131	1.720E+07	1.720E+07	1.720E+07	1.720E+07	1.720E+07	1.720E+07	2.090E+07	1.720E+07
I-132	1.250E+06	1.250E+06	1.250E+06	1.250E+06	1.250E+06	1.250E+06	1.470E+06	1.250E+06
I-133	2.450E+06	2.450E+06	2.450E+06	2.450E+06	2.450E+06	2.450E+06	2.980E+06	2.450E+06
I-134	4.470E+05	4.470E+05	4.470E+05	4.470E+05	4.470E+05	4.470E+05	5.300E+05	4.470E+05
I-135	2.530E+06	2.530E+06	2.530E+06	2.530E+06	2.530E+06	2.530E+06	2.950E+06	2.530E+06
CS-134	6.860E+09	6.860E+09	6.860E+09	6.860E+09	6.860E+09	6.860E+09	8.000E+09	6.860E+09
CS-136	1.510E+08	1.510E+08	1.510E+08	1.510E+08	1.510E+08	1.510E+08	1.710E+08	1.510E+08
CS-137	1.030E+10	1.030E+10	1.030E+10	1.030E+10	1.030E+10	1.030E+10	1.200E+10	1.030E+10
CS-138	3.590E+05	3.590E+05	3.590E+05	3.590E+05	3.590E+05	3.590E+05	4.100E+05	3.590E+05
BA-139	1.060E+05	1.060E+05	1.060E+05	1.060E+05	1.060E+05	1.060E+05	1.190E+05	1.060E+05
BA-140	2.050E+07	2.050E+07	2.050E+07	2.050E+07	2.050E+07	2.050E+07	2.350E+07	2.050E+07
BA-141	4.170E+04	4.170E+04	4.170E+04	4.170E+04	4.170E+04	4.170E+04	4.750E+04	4.170E+04
BA-142	4.490E+04	4.490E+04	4.490E+04	4.490E+04	4.490E+04	4.490E+04	5.110E+04	4.490E+04
LA-140	1.920E+07	1.920E+07	1.920E+07	1.920E+07	1.920E+07	1.920E+07	2.180E+07	1.920E+07
LA-142	7.600E+05	7.600E+05	7.600E+05	7.600E+05	7.600E+05	7.600E+05	9.120E+05	7.600E+05
CE-141	1.370E+07	1.370E+07	1.370E+07	1.370E+07	1.370E+07	1.370E+07	1.540E+07	1.370E+07
CE-143	2.310E+06	2.310E+06	2.310E+06	2.310E+06	2.310E+06	2.310E+06	2.630E+06	2.310E+06
CE-144	6.950E+07	6.950E+07	6.950E+07	6.950E+07	6.950E+07	6.950E+07	8.040E+07	6.950E+07
PR-143	0.000E+00	0.000E+00	0.000E+00	0.000E+00	0.000E+00	0.000E+00	0.000E+00	0.000E+00
PR-144	1.830E+03	1.830E+03	1.830E+03	1.830E+03	1.830E+03	1.830E+03	2.110E+03	1.830E+03
ND-147	8.390E+06	8.390E+06	8.390E+06	8.390E+06	8.390E+06	8.390E+06	1.010E+07	8.390E+06
W-187	2.350E+06	2.350E+06	2.350E+06	2.350E+06	2.350E+06	2.350E+06	2.730E+06	2.350E+06
NP-239	1.710E+06	1.710E+06	1.710E+06	1.710E+06	1.710E+06	1.710E+06	1.980E+06	1.710E+06

APPENDIX H

R_i Teen Dose Factors for use in the Gaseous Dose Calculations

Agegroup:	TEEN	Pathway:	Grs/Cow/Milk (CMILK)			Units:	m^2·mrem/yr / µCi/sec; mrem/yr / µCi/m^3 (H-3)	
Nuclide	**Bone**	**Liver**	**Thyroid**	**Kidney**	**Lung**	**Gilli**	**Skin**	**Total Body**
H-3	0.000E+00	9.940E+02	9.940E+02	9.940E+02	9.940E+02	9.940E+02	0.000E+00	9.940E+02
C-14	4.860E+08	9.720E+07	9.720E+07	9.720E+07	9.720E+07	9.720E+07	0.000E+00	9.720E+07
NA-24	4.260E+06	4.260E+06	4.260E+06	4.260E+06	4.260E+06	4.260E+06	0.000E+00	4.260E+06
P-32	3.150E+10	1.950E+09	0.000E+00	0.000E+00	0.000E+00	2.650E+09	0.000E+00	1.220E+09
CR-51	0.000E+00	0.000E+00	2.770E+04	1.090E+04	7.130E+04	8.390E+06	0.000E+00	4.990E+04
MN-54	0.000E+00	1.400E+07	0.000E+00	4.180E+06	0.000E+00	2.870E+07	0.000E+00	2.780E+06
MN-56	0.000E+00	7.250E-03	0.000E+00	9.180E-03	0.000E+00	4.770E-01	0.000E+00	1.290E-03
FE-55	4.450E+07	3.160E+07	0.000E+00	0.000E+00	2.000E+07	1.370E+07	0.000E+00	7.360E+06
FE-59	5.180E+07	1.210E+08	0.000E+00	0.000E+00	3.810E+07	2.860E+08	0.000E+00	4.670E+07
CO-58	0.000E+00	7.940E+06	0.000E+00	0.000E+00	0.000E+00	1.090E+08	0.000E+00	1.830E+07
CO-60	0.000E+00	2.780E+07	0.000E+00	0.000E+00	0.000E+00	3.620E+08	0.000E+00	6.260E+07
NI-63	1.180E+10	8.350E+08	0.000E+00	0.000E+00	0.000E+00	1.330E+08	0.000E+00	4.010E+08
NI-65	6.770E-01	8.650E-02	0.000E+00	0.000E+00	0.000E+00	4.690E+00	0.000E+00	3.940E-02
CU-64	0.000E+00	4.250E+04	0.000E+00	1.070E+05	0.000E+00	3.290E+06	0.000E+00	2.000E+04
ZN-65	2.110E+09	7.320E+09	0.000E+00	4.680E+09	0.000E+00	3.100E+09	0.000E+00	3.410E+09
ZN-69	3.850E-12	7.330E-12	0.000E+00	4.790E-12	0.000E+00	1.350E-11	0.000E+00	5.130E-13
BR-83	0.000E+00	0.000E+00	0.000E+00	0.000E+00	0.000E+00	0.000E+00	0.000E+00	1.790E-01
BR-84	0.000E+00	0.000E+00	0.000E+00	0.000E+00	0.000E+00	0.000E+00	0.000E+00	2.880E-23
BR-85	0.000E+00	0.000E+00	0.000E+00	0.000E+00	0.000E+00	0.000E+00	0.000E+00	0.000E+00
RB-86	0.000E+00	4.730E+09	0.000E+00	0.000E+00	0.000E+00	7.000E+08	0.000E+00	2.220E+09
RB-88	0.000E+00	3.890E-45	0.000E+00	0.000E+00	0.000E+00	3.330E-52	0.000E+00	2.070E-45
RB-89	0.000E+00	7.660E-53	0.000E+00	0.000E+00	0.000E+00	1.170E-61	0.000E+00	5.420E-53
SR-89	2.670E+09	0.000E+00	0.000E+00	0.000E+00	0.000E+00	3.190E+08	0.000E+00	7.660E+07
SR-90	6.610E+10	0.000E+00	0.000E+00	0.000E+00	0.000E+00	1.860E+09	0.000E+00	1.630E+10
SR-91	5.310E+04	0.000E+00	0.000E+00	0.000E+00	0.000E+00	2.410E+05	0.000E+00	2.110E+03

APPENDIX H

R_i Teen Dose Factors for use in the Gaseous Dose Calculations

Agegroup:	TEEN	Pathway:	Grs/Cow/Milk (CMILK)			Units:	m^2·mrem/yr / µCi/sec; mrem/yr / µCi/m^3 (H-3)	
Nuclide	**Bone**	**Liver**	**Thyroid**	**Kidney**	**Lung**	**Gilli**	**Skin**	**Total Body**
SR-92	8.940E-01	0.000E+00	0.000E+00	0.000E+00	0.000E+00	2.280E+01	0.000E+00	3.810E-02
Y-90	1.300E+02	0.000E+00	0.000E+00	0.000E+00	0.000E+00	1.070E+06	0.000E+00	3.510E+00
Y-91	1.580E+04	0.000E+00	0.000E+00	0.000E+00	0.000E+00	6.480E+06	0.000E+00	4.240E+02
Y-91M	1.090E-19	0.000E+00	0.000E+00	0.000E+00	0.000E+00	5.170E-18	0.000E+00	4.180E-21
Y-92	1.030E-04	0.000E+00	0.000E+00	0.000E+00	0.000E+00	2.830E+00	0.000E+00	2.980E-06
Y-93	4.120E-01	0.000E+00	0.000E+00	0.000E+00	0.000E+00	1.260E+04	0.000E+00	1.130E-02
ZR-95	1.650E+03	5.200E+02	0.000E+00	7.650E+02	0.000E+00	1.200E+06	0.000E+00	3.580E+02
ZR-97	7.880E-01	1.560E-01	0.000E+00	2.370E-01	0.000E+00	4.220E+04	0.000E+00	7.190E-02
NB-95	1.410E+05	7.810E+04	0.000E+00	7.570E+04	0.000E+00	3.340E+08	0.000E+00	4.300E+04
MO-99	0.000E+00	4.470E+07	0.000E+00	1.020E+08	0.000E+00	8.010E+07	0.000E+00	8.530E+06
TC-99M	5.760E+00	1.610E+01	0.000E+00	2.390E+02	8.920E+00	1.050E+04	0.000E+00	2.080E+02
TC-101	4.740E-60	6.750E-60	0.000E+00	1.220E-58	4.110E-60	1.150E-66	0.000E+00	6.630E-59
RU-103	1.810E+03	0.000E+00	0.000E+00	6.380E+03	0.000E+00	1.510E+05	0.000E+00	7.740E+02
RU-105	1.560E-03	0.000E+00	0.000E+00	1.970E-02	0.000E+00	1.260E+00	0.000E+00	6.070E-04
RU-106	3.750E+04	0.000E+00	0.000E+00	7.240E+04	0.000E+00	1.800E+06	0.000E+00	4.730E+03
AG-110M	9.630E+07	9.110E+07	0.000E+00	1.740E+08	0.000E+00	2.560E+10	0.000E+00	5.540E+07
TE-125M	3.000E+07	1.080E+07	8.390E+06	0.000E+00	0.000E+00	8.860E+07	0.000E+00	4.020E+06
TE-127	1.210E+03	4.290E+02	8.350E+02	4.900E+03	0.000E+00	9.340E+04	0.000E+00	2.600E+02
TE-127M	8.440E+07	2.990E+07	2.010E+07	3.420E+08	0.000E+00	2.100E+08	0.000E+00	1.000E+07
TE-129	5.200E-10	1.940E-10	3.720E-10	2.180E-09	0.000E+00	2.840E-09	0.000E+00	1.270E-10
TE-129M	1.100E+08	4.090E+07	3.550E+07	4.610E+08	0.000E+00	4.130E+08	0.000E+00	1.740E+07
TE-131	6.580E-33	2.710E-33	5.070E-33	2.880E-32	0.000E+00	5.400E-34	0.000E+00	2.060E-33
TE-131M	6.570E+05	3.150E+05	4.740E+05	3.290E+06	0.000E+00	2.530E+07	0.000E+00	2.630E+05
TE-132	4.290E+06	2.720E+06	2.870E+06	2.610E+07	0.000E+00	8.610E+07	0.000E+00	2.560E+06
I-130	7.380E+05	2.140E+06	1.740E+08	3.290E+06	0.000E+00	1.640E+06	0.000E+00	8.530E+05

APPENDIX H

R_i Teen Dose Factors for use in the Gaseous Dose Calculations

Agegroup:	TEEN	Pathway:	Grs/Cow/Milk (CMILK)			Units:	m^2·mrem/yr / µCi/sec; mrem/yr / µCi/m^3 (H-3)	
Nuclide	**Bone**	**Liver**	**Thyroid**	**Kidney**	**Lung**	**Gilli**	**Skin**	**Total Body**
I-131	5.370E+08	7.520E+08	2.190E+11	1.290E+09	0.000E+00	1.490E+08	0.000E+00	4.040E+08
I-132	2.910E-01	7.620E-01	2.570E+01	1.200E+00	0.000E+00	3.320E-01	0.000E+00	2.740E-01
I-133	7.070E+06	1.200E+07	1.670E+09	2.100E+07	0.000E+00	9.070E+06	0.000E+00	3.660E+06
I-134	3.580E-12	9.500E-12	1.580E-10	1.500E-11	0.000E+00	1.250E-13	0.000E+00	3.410E-12
I-135	2.280E+04	5.870E+04	3.780E+06	9.270E+04	0.000E+00	6.510E+04	0.000E+00	2.180E+04
CS-134	9.820E+09	2.310E+10	0.000E+00	7.340E+09	2.800E+09	2.870E+08	0.000E+00	1.070E+10
CS-136	4.480E+08	1.760E+09	0.000E+00	9.600E+08	1.510E+08	1.420E+08	0.000E+00	1.180E+09
CS-137	1.340E+10	1.780E+10	0.000E+00	6.060E+09	2.350E+09	2.530E+08	0.000E+00	6.200E+09
CS-138	1.640E-23	3.150E-23	0.000E+00	2.330E-23	2.710E-24	1.430E-26	0.000E+00	1.580E-23
BA-139	8.170E-08	5.750E-11	0.000E+00	5.420E-11	3.960E-11	7.290E-07	0.000E+00	2.380E-09
BA-140	4.850E+07	5.950E+04	0.000E+00	2.020E+04	4.000E+04	7.480E+07	0.000E+00	3.130E+06
BA-141	7.520E-46	5.620E-49	0.000E+00	5.210E-49	3.850E-49	1.600E-51	0.000E+00	2.510E-47
BA-142	4.790E-80	4.790E-83	0.000E+00	4.050E-83	3.190E-83	1.470E-91	0.000E+00	2.950E-81
LA-140	8.100E+00	3.980E+00	0.000E+00	0.000E+00	0.000E+00	2.290E+05	0.000E+00	1.060E+00
LA-142	3.360E-11	1.490E-11	0.000E+00	0.000E+00	0.000E+00	4.540E-07	0.000E+00	3.710E-12
CE-141	8.880E+03	5.930E+03	0.000E+00	2.790E+03	0.000E+00	1.700E+07	0.000E+00	6.810E+02
CE-143	7.640E+01	5.560E+04	0.000E+00	2.490E+01	0.000E+00	1.670E+06	0.000E+00	6.210E+00
CE-144	6.580E+05	2.720E+05	0.000E+00	1.630E+05	0.000E+00	1.660E+08	0.000E+00	3.540E+04
PR-143	2.900E+02	1.160E+02	0.000E+00	6.730E+01	0.000E+00	9.540E+05	0.000E+00	1.440E+01
PR-144	1.080E-53	4.430E-54	0.000E+00	2.540E-54	0.000E+00	1.190E-56	0.000E+00	5.490E-55
ND-147	1.810E+02	1.970E+02	0.000E+00	1.160E+02	0.000E+00	7.110E+05	0.000E+00	1.180E+01
W-187	1.190E+04	9.710E+03	0.000E+00	0.000E+00	0.000E+00	2.630E+06	0.000E+00	3.400E+03
NP-239	7.010E+00	6.610E-01	0.000E+00	2.070E+00	0.000E+00	1.060E+05	0.000E+00	3.670E-01

APPENDIX H

R_i Teen Dose Factors for use in the Gaseous Dose Calculations

Agegroup:	TEEN	Pathway:	Grs/Goat/Milk (GMILK)			Units:	m^2·mrem/yr / µCi/sec; mrem/yr / µCi/m^3 (H-3)	
Nuclide	**Bone**	**Liver**	**Thyroid**	**Kidney**	**Lung**	**Gilli**	**Skin**	**Total Body**
H-3	0.000E+00	2.030E+03	2.030E+03	2.030E+03	2.030E+03	2.030E+03	0.000E+00	2.030E+03
C-14	4.860E+08	9.720E+07	9.720E+07	9.720E+07	9.720E+07	9.720E+07	0.000E+00	9.720E+07
NA-24	5.110E+05	5.110E+05	5.110E+05	5.110E+05	5.110E+05	5.110E+05	0.000E+00	5.110E+05
P-32	3.780E+10	2.340E+09	0.000E+00	0.000E+00	0.000E+00	3.180E+09	0.000E+00	1.470E+09
CR-51	0.000E+00	0.000E+00	3.330E+03	1.310E+03	8.550E+03	1.010E+06	0.000E+00	5.990E+03
MN-54	0.000E+00	1.680E+06	0.000E+00	5.020E+05	0.000E+00	3.450E+06	0.000E+00	3.340E+05
MN-56	0.000E+00	8.700E-04	0.000E+00	1.100E-03	0.000E+00	5.730E-02	0.000E+00	1.550E-04
FE-55	5.790E+05	4.110E+05	0.000E+00	0.000E+00	2.600E+05	1.780E+05	0.000E+00	9.570E+04
FE-59	6.740E+05	1.570E+06	0.000E+00	0.000E+00	4.960E+05	3.720E+06	0.000E+00	6.070E+05
CO-58	0.000E+00	9.520E+05	0.000E+00	0.000E+00	0.000E+00	1.310E+07	0.000E+00	2.190E+06
CO-60	0.000E+00	3.340E+06	0.000E+00	0.000E+00	0.000E+00	4.350E+07	0.000E+00	7.520E+06
NI-63	1.420E+09	1.000E+08	0.000E+00	0.000E+00	0.000E+00	1.590E+07	0.000E+00	4.810E+07
NI-65	8.120E-02	1.040E-02	0.000E+00	0.000E+00	0.000E+00	5.630E-01	0.000E+00	4.730E-03
CU-64	0.000E+00	4.730E+03	0.000E+00	1.200E+04	0.000E+00	3.670E+05	0.000E+00	2.230E+03
ZN-65	2.530E+08	8.780E+08	0.000E+00	5.620E+08	0.000E+00	3.720E+08	0.000E+00	4.100E+08
ZN-69	4.620E-13	8.800E-13	0.000E+00	5.750E-13	0.000E+00	1.620E-12	0.000E+00	6.160E-14
BR-83	0.000E+00	0.000E+00	0.000E+00	0.000E+00	0.000E+00	0.000E+00	0.000E+00	2.150E-02
BR-84	0.000E+00	0.000E+00	0.000E+00	0.000E+00	0.000E+00	0.000E+00	0.000E+00	3.450E-24
BR-85	0.000E+00	0.000E+00	0.000E+00	0.000E+00	0.000E+00	0.000E+00	0.000E+00	0.000E+00
RB-86	0.000E+00	5.670E+08	0.000E+00	0.000E+00	0.000E+00	8.400E+07	0.000E+00	2.670E+08
RB-88	0.000E+00	4.670E-46	0.000E+00	0.000E+00	0.000E+00	4.000E-53	0.000E+00	2.490E-46
RB-89	0.000E+00	9.190E-54	0.000E+00	0.000E+00	0.000E+00	1.410E-62	0.000E+00	6.500E-54
SR-89	5.620E+09	0.000E+00	0.000E+00	0.000E+00	0.000E+00	6.690E+08	0.000E+00	1.610E+08
SR-90	1.390E+11	0.000E+00	0.000E+00	0.000E+00	0.000E+00	3.900E+09	0.000E+00	3.430E+10
SR-91	1.120E+05	0.000E+00	0.000E+00	0.000E+00	0.000E+00	5.060E+05	0.000E+00	4.440E+03

APPENDIX H

R_i Teen Dose Factors for use in the Gaseous Dose Calculations

Agegroup:	TEEN	Pathway:	Grs/Goat/Milk (GMILK)			Units:	m^2·mrem/yr / µCi/sec; mrem/yr / µCi/m^3 (H-3)	
Nuclide	**Bone**	**Liver**	**Thyroid**	**Kidney**	**Lung**	**Gilli**	**Skin**	**Total Body**
SR-92	1.880E+00	0.000E+00	0.000E+00	0.000E+00	0.000E+00	4.780E+01	0.000E+00	8.000E-02
Y-90	1.560E+01	0.000E+00	0.000E+00	0.000E+00	0.000E+00	1.290E+05	0.000E+00	4.210E-01
Y-91	1.900E+03	0.000E+00	0.000E+00	0.000E+00	0.000E+00	7.770E+05	0.000E+00	5.080E+01
Y-91M	1.310E-20	0.000E+00	0.000E+00	0.000E+00	0.000E+00	6.200E-19	0.000E+00	5.020E-22
Y-92	1.240E-05	0.000E+00	0.000E+00	0.000E+00	0.000E+00	3.390E-01	0.000E+00	3.580E-07
Y-93	4.940E-02	0.000E+00	0.000E+00	0.000E+00	0.000E+00	1.510E+03	0.000E+00	1.360E-03
ZR-95	1.980E+02	6.250E+01	0.000E+00	9.180E+01	0.000E+00	1.440E+05	0.000E+00	4.300E+01
ZR-97	9.460E-02	1.870E-02	0.000E+00	2.840E-02	0.000E+00	5.070E+03	0.000E+00	8.620E-03
NB-95	1.690E+04	9.370E+03	0.000E+00	9.080E+03	0.000E+00	4.010E+07	0.000E+00	5.160E+03
MO-99	0.000E+00	5.370E+06	0.000E+00	1.230E+07	0.000E+00	9.610E+06	0.000E+00	1.020E+06
TC-99M	6.910E-01	1.930E+00	0.000E+00	2.870E+01	1.070E+00	1.270E+03	0.000E+00	2.500E+01
TC-101	5.690E-61	8.100E-61	0.000E+00	1.460E-59	4.930E-61	1.380E-67	0.000E+00	7.950E-60
RU-103	2.170E+02	0.000E+00	0.000E+00	7.660E+02	0.000E+00	1.810E+04	0.000E+00	9.290E+01
RU-105	1.880E-04	0.000E+00	0.000E+00	2.370E-03	0.000E+00	1.520E-01	0.000E+00	7.290E-05
RU-106	4.500E+03	0.000E+00	0.000E+00	8.680E+03	0.000E+00	2.160E+05	0.000E+00	5.670E+02
AG-110M	1.160E+07	1.090E+07	0.000E+00	2.080E+07	0.000E+00	3.070E+09	0.000E+00	6.650E+06
TE-125M	3.600E+06	1.300E+06	1.010E+06	0.000E+00	0.000E+00	1.060E+07	0.000E+00	4.820E+05
TE-127	1.450E+02	5.150E+01	1.000E+02	5.880E+02	0.000E+00	1.120E+04	0.000E+00	3.120E+01
TE-127M	1.010E+07	3.590E+06	2.410E+06	4.100E+07	0.000E+00	2.520E+07	0.000E+00	1.200E+06
TE-129	6.240E-11	2.330E-11	4.460E-11	2.620E-10	0.000E+00	3.410E-10	0.000E+00	1.520E-11
TE-129M	1.320E+07	4.900E+06	4.260E+06	5.530E+07	0.000E+00	4.960E+07	0.000E+00	2.090E+06
TE-131	7.900E-34	3.260E-34	6.090E-34	3.450E-33	0.000E+00	6.480E-35	0.000E+00	2.470E-34
TE-131M	7.880E+04	3.780E+04	5.690E+04	3.940E+05	0.000E+00	3.030E+06	0.000E+00	3.150E+04
TE-132	5.150E+05	3.260E+05	3.440E+05	3.130E+06	0.000E+00	1.030E+07	0.000E+00	3.070E+05
I-130	8.860E+05	2.560E+06	2.090E+08	3.950E+06	0.000E+00	1.970E+06	0.000E+00	1.020E+06

APPENDIX H

R_i Teen Dose Factors for use in the Gaseous Dose Calculations

Agegroup:	TEEN	Pathway:	Grs/Goat/Milk (GMILK)			Units:	m^2·mrem/yr / µCi/sec; mrem/yr / µCi/m^3 (H-3)	
Nuclide	**Bone**	**Liver**	**Thyroid**	**Kidney**	**Lung**	**Gilli**	**Skin**	**Total Body**
I-131	6.450E+08	9.030E+08	2.630E+11	1.550E+09	0.000E+00	1.790E+08	0.000E+00	4.850E+08
I-132	3.500E-01	9.150E-01	3.080E+01	1.440E+00	0.000E+00	3.980E-01	0.000E+00	3.280E-01
I-133	8.480E+06	1.440E+07	2.010E+09	2.520E+07	0.000E+00	1.090E+07	0.000E+00	4.390E+06
I-134	4.300E-12	1.140E-11	1.900E-10	1.800E-11	0.000E+00	1.500E-13	0.000E+00	4.090E-12
I-135	2.740E+04	7.040E+04	4.530E+06	1.110E+05	0.000E+00	7.810E+04	0.000E+00	2.610E+04
CS-134	2.940E+10	6.930E+10	0.000E+00	2.200E+10	8.410E+09	8.620E+08	0.000E+00	3.220E+10
CS-136	1.340E+09	5.290E+09	0.000E+00	2.880E+09	4.540E+08	4.260E+08	0.000E+00	3.550E+09
CS-137	4.020E+10	5.340E+10	0.000E+00	1.820E+10	7.060E+09	7.600E+08	0.000E+00	1.860E+10
CS-138	4.920E-23	9.450E-23	0.000E+00	6.980E-23	8.120E-24	4.290E-26	0.000E+00	4.730E-23
BA-139	9.800E-09	6.900E-12	0.000E+00	6.500E-12	4.750E-12	8.750E-08	0.000E+00	2.860E-10
BA-140	5.820E+06	7.130E+03	0.000E+00	2.420E+03	4.800E+03	8.980E+06	0.000E+00	3.750E+05
BA-141	9.030E-47	6.740E-50	0.000E+00	6.260E-50	4.610E-50	1.920E-52	0.000E+00	3.010E-48
BA-142	5.750E-81	5.750E-84	0.000E+00	4.860E-84	3.820E-84	1.760E-92	0.000E+00	3.540E-82
LA-140	9.720E-01	4.780E-01	0.000E+00	0.000E+00	0.000E+00	2.740E+04	0.000E+00	1.270E-01
LA-142	4.030E-12	1.790E-12	0.000E+00	0.000E+00	0.000E+00	5.440E-08	0.000E+00	4.450E-13
CE-141	1.070E+03	7.120E+02	0.000E+00	3.350E+02	0.000E+00	2.040E+06	0.000E+00	8.170E+01
CE-143	9.170E+00	6.670E+03	0.000E+00	2.990E+00	0.000E+00	2.000E+05	0.000E+00	7.450E-01
CE-144	7.900E+04	3.270E+04	0.000E+00	1.950E+04	0.000E+00	1.990E+07	0.000E+00	4.240E+03
PR-143	3.480E+01	1.390E+01	0.000E+00	8.080E+00	0.000E+00	1.150E+05	0.000E+00	1.730E+00
PR-144	1.300E-54	5.320E-55	0.000E+00	3.050E-55	0.000E+00	1.430E-57	0.000E+00	6.590E-56
ND-147	2.170E+01	2.360E+01	0.000E+00	1.390E+01	0.000E+00	8.530E+04	0.000E+00	1.420E+00
W-187	1.430E+03	1.170E+03	0.000E+00	0.000E+00	0.000E+00	3.150E+05	0.000E+00	4.080E+02
NP-239	8.410E-01	7.930E-02	0.000E+00	2.490E-01	0.000E+00	1.280E+04	0.000E+00	4.410E-02

APPENDIX H

R_i Teen Dose Factors for use in the Gaseous Dose Calculations

Agegroup:	TEEN	Pathway:	Grs/Cow/Meat (CMEAT)			Units:	m^2·mrem/yr / µCi/sec; mrem/yr / µCi/m^3 (H-3)	
Nuclide	**Bone**	**Liver**	**Thyroid**	**Kidney**	**Lung**	**Gilli**	**Skin**	**Total Body**
H-3	0.000E+00	1.940E+02	1.940E+02	1.940E+02	1.940E+02	1.940E+02	0.000E+00	1.940E+02
C-14	2.040E+08	4.080E+07	4.080E+07	4.080E+07	4.080E+07	4.080E+07	0.000E+00	4.080E+07
NA-24	1.080E-03	1.080E-03	1.080E-03	1.080E-03	1.080E-03	1.080E-03	0.000E+00	1.080E-03
P-32	3.930E+09	2.440E+08	0.000E+00	0.000E+00	0.000E+00	3.310E+08	0.000E+00	1.530E+08
CR-51	0.000E+00	0.000E+00	3.130E+03	1.240E+03	8.050E+03	9.470E+05	0.000E+00	5.640E+03
MN-54	0.000E+00	7.000E+06	0.000E+00	2.090E+06	0.000E+00	1.440E+07	0.000E+00	1.390E+06
MN-56	0.000E+00	1.070E-53	0.000E+00	1.360E-53	0.000E+00	7.070E-52	0.000E+00	1.910E-54
FE-55	2.380E+08	1.690E+08	0.000E+00	0.000E+00	1.070E+08	7.310E+07	0.000E+00	3.940E+07
FE-59	2.120E+08	4.950E+08	0.000E+00	0.000E+00	1.560E+08	1.170E+09	0.000E+00	1.910E+08
CO-58	0.000E+00	1.410E+07	0.000E+00	0.000E+00	0.000E+00	1.940E+08	0.000E+00	3.240E+07
CO-60	0.000E+00	5.830E+07	0.000E+00	0.000E+00	0.000E+00	7.600E+08	0.000E+00	1.310E+08
NI-63	1.520E+10	1.070E+09	0.000E+00	0.000E+00	0.000E+00	1.710E+08	0.000E+00	5.150E+08
NI-65	1.880E-52	2.410E-53	0.000E+00	0.000E+00	0.000E+00	1.300E-51	0.000E+00	1.100E-53
CU-64	0.000E+00	2.210E-07	0.000E+00	5.600E-07	0.000E+00	1.720E-05	0.000E+00	1.040E-07
ZN-65	2.500E+08	8.690E+08	0.000E+00	5.560E+08	0.000E+00	3.680E+08	0.000E+00	4.050E+08
ZN-69	0.000E+00	0.000E+00	0.000E+00	0.000E+00	0.000E+00	0.000E+00	0.000E+00	0.000E+00
BR-83	0.000E+00	0.000E+00	0.000E+00	0.000E+00	0.000E+00	0.000E+00	0.000E+00	5.070E-57
BR-84	0.000E+00	0.000E+00	0.000E+00	0.000E+00	0.000E+00	0.000E+00	0.000E+00	0.000E+00
BR-85	0.000E+00	0.000E+00	0.000E+00	0.000E+00	0.000E+00	0.000E+00	0.000E+00	0.000E+00
RB-86	0.000E+00	4.070E+08	0.000E+00	0.000E+00	0.000E+00	6.020E+07	0.000E+00	1.910E+08
RB-88	0.000E+00	0.000E+00	0.000E+00	0.000E+00	0.000E+00	0.000E+00	0.000E+00	0.000E+00
RB-89	0.000E+00	0.000E+00	0.000E+00	0.000E+00	0.000E+00	0.000E+00	0.000E+00	0.000E+00
SR-89	2.550E+08	0.000E+00	0.000E+00	0.000E+00	0.000E+00	3.030E+07	0.000E+00	7.290E+06
SR-90	8.050E+09	0.000E+00	0.000E+00	0.000E+00	0.000E+00	2.260E+08	0.000E+00	1.990E+09
SR-91	1.280E-10	0.000E+00	0.000E+00	0.000E+00	0.000E+00	5.800E-10	0.000E+00	5.090E-12

APPENDIX H

R_i Teen Dose Factors for use in the Gaseous Dose Calculations

Agegroup:	TEEN	Pathway:	Grs/Cow/Meat (CMEAT)			Units:	m^2·mrem/yr / µCi/sec; mrem/yr / µCi/m^3 (H-3)	
Nuclide	**Bone**	**Liver**	**Thyroid**	**Kidney**	**Lung**	**Gilli**	**Skin**	**Total Body**
SR-92	9.880E-50	0.000E+00	0.000E+00	0.000E+00	0.000E+00	2.520E-48	0.000E+00	4.210E-51
Y-90	9.060E+01	0.000E+00	0.000E+00	0.000E+00	0.000E+00	7.470E+05	0.000E+00	2.440E+00
Y-91	9.540E+05	0.000E+00	0.000E+00	0.000E+00	0.000E+00	3.910E+08	0.000E+00	2.560E+04
Y-91M	0.000E+00	0.000E+00	0.000E+00	0.000E+00	0.000E+00	0.000E+00	0.000E+00	0.000E+00
Y-92	1.280E-39	0.000E+00	0.000E+00	0.000E+00	0.000E+00	3.520E-35	0.000E+00	3.710E-41
Y-93	3.960E-12	0.000E+00	0.000E+00	0.000E+00	0.000E+00	1.210E-07	0.000E+00	1.090E-13
ZR-95	1.500E+06	4.730E+05	0.000E+00	6.950E+05	0.000E+00	1.090E+09	0.000E+00	3.250E+05
ZR-97	1.720E-05	3.410E-06	0.000E+00	5.170E-06	0.000E+00	9.230E-01	0.000E+00	1.570E-06
NB-95	1.790E+06	9.950E+05	0.000E+00	9.650E+05	0.000E+00	4.260E+09	0.000E+00	5.480E+05
MO-99	0.000E+00	8.270E+04	0.000E+00	1.890E+05	0.000E+00	1.480E+05	0.000E+00	1.580E+04
TC-99M	3.530E-21	9.850E-21	0.000E+00	1.470E-19	5.470E-21	6.470E-18	0.000E+00	1.280E-19
TC-101	0.000E+00	0.000E+00	0.000E+00	0.000E+00	0.000E+00	0.000E+00	0.000E+00	0.000E+00
RU-103	8.570E+07	0.000E+00	0.000E+00	3.020E+08	0.000E+00	7.160E+09	0.000E+00	3.660E+07
RU-105	4.830E-28	0.000E+00	0.000E+00	6.090E-27	0.000E+00	3.900E-25	0.000E+00	1.880E-28
RU-106	2.360E+09	0.000E+00	0.000E+00	4.550E+09	0.000E+00	1.130E+11	0.000E+00	2.970E+08
AG-110M	5.060E+06	4.790E+06	0.000E+00	9.130E+06	0.000E+00	1.340E+09	0.000E+00	2.910E+06
TE-125M	3.030E+08	1.090E+08	8.470E+07	0.000E+00	0.000E+00	8.940E+08	0.000E+00	4.050E+07
TE-127	1.800E-10	6.380E-11	1.240E-10	7.290E-10	0.000E+00	1.390E-08	0.000E+00	3.870E-11
TE-127M	9.410E+08	3.340E+08	2.240E+08	3.820E+09	0.000E+00	2.350E+09	0.000E+00	1.120E+08
TE-129	0.000E+00	0.000E+00	0.000E+00	0.000E+00	0.000E+00	0.000E+00	0.000E+00	0.000E+00
TE-129M	9.500E+08	3.530E+08	3.070E+08	3.970E+09	0.000E+00	3.570E+09	0.000E+00	1.500E+08
TE-131	0.000E+00	0.000E+00	0.000E+00	0.000E+00	0.000E+00	0.000E+00	0.000E+00	0.000E+00
TE-131M	3.760E+02	1.800E+02	2.710E+02	1.880E+03	0.000E+00	1.450E+04	0.000E+00	1.500E+02
TE-132	1.160E+06	7.360E+05	7.750E+05	7.060E+06	0.000E+00	2.330E+07	0.000E+00	6.920E+05
I-130	1.700E-06	4.910E-06	4.000E-04	7.560E-06	0.000E+00	3.770E-06	0.000E+00	1.960E-06

APPENDIX H

R_i Teen Dose Factors for use in the Gaseous Dose Calculations

Agegroup:	TEEN	Pathway:	Grs/Cow/Meat (CMEAT)			Units:	m^2·mrem/yr / µCi/sec; mrem/yr / µCi/m^3 (H-3)	
Nuclide	**Bone**	**Liver**	**Thyroid**	**Kidney**	**Lung**	**Gilli**	**Skin**	**Total Body**
I-131	8.920E+06	1.250E+07	3.650E+09	2.150E+07	0.000E+00	2.470E+06	0.000E+00	6.710E+06
I-132	5.660E-59	1.480E-58	4.990E-57	2.330E-58	0.000E+00	6.450E-59	0.000E+00	5.320E-59
I-133	3.050E-01	5.180E-01	7.230E+01	9.090E-01	0.000E+00	3.920E-01	0.000E+00	1.580E-01
I-134	0.000E+00	0.000E+00	0.000E+00	0.000E+00	0.000E+00	0.000E+00	0.000E+00	0.000E+00
I-135	3.600E-17	9.260E-17	5.960E-15	1.460E-16	0.000E+00	1.030E-16	0.000E+00	3.430E-17
CS-134	5.230E+08	1.230E+09	0.000E+00	3.910E+08	1.490E+08	1.530E+07	0.000E+00	5.710E+08
CS-136	9.400E+06	3.700E+07	0.000E+00	2.010E+07	3.170E+06	2.980E+06	0.000E+00	2.480E+07
CS-137	7.240E+08	9.630E+08	0.000E+00	3.280E+08	1.270E+08	1.370E+07	0.000E+00	3.360E+08
CS-138	0.000E+00	0.000E+00	0.000E+00	0.000E+00	0.000E+00	0.000E+00	0.000E+00	0.000E+00
BA-139	0.000E+00	0.000E+00	0.000E+00	0.000E+00	0.000E+00	0.000E+00	0.000E+00	0.000E+00
BA-140	2.380E+07	2.910E+04	0.000E+00	9.870E+03	1.960E+04	3.660E+07	0.000E+00	1.530E+06
BA-141	0.000E+00	0.000E+00	0.000E+00	0.000E+00	0.000E+00	0.000E+00	0.000E+00	0.000E+00
BA-142	0.000E+00	0.000E+00	0.000E+00	0.000E+00	0.000E+00	0.000E+00	0.000E+00	0.000E+00
LA-140	3.050E-02	1.500E-02	0.000E+00	0.000E+00	0.000E+00	8.610E+02	0.000E+00	3.990E-03
LA-142	2.870E-92	1.280E-92	0.000E+00	0.000E+00	0.000E+00	3.880E-88	0.000E+00	3.180E-93
CE-141	1.180E+04	7.870E+03	0.000E+00	3.710E+03	0.000E+00	2.250E+07	0.000E+00	9.040E+02
CE-143	1.690E-02	1.230E+01	0.000E+00	5.510E-03	0.000E+00	3.690E+02	0.000E+00	1.370E-03
CE-144	1.230E+06	5.080E+05	0.000E+00	3.040E+05	0.000E+00	3.090E+08	0.000E+00	6.600E+04
PR-143	1.760E+04	7.040E+03	0.000E+00	4.090E+03	0.000E+00	5.800E+07	0.000E+00	8.780E+02
PR-144	0.000E+00	0.000E+00	0.000E+00	0.000E+00	0.000E+00	0.000E+00	0.000E+00	0.000E+00
ND-147	6.230E+03	6.770E+03	0.000E+00	3.980E+03	0.000E+00	2.440E+07	0.000E+00	4.060E+02
W-187	1.730E-02	1.410E-02	0.000E+00	0.000E+00	0.000E+00	3.820E+00	0.000E+00	4.940E-03
NP-239	2.260E-01	2.140E-02	0.000E+00	6.700E-02	0.000E+00	3.440E+03	0.000E+00	1.190E-02

APPENDIX H

R_i Teen Dose Factors for use in the Gaseous Dose Calculations

Agegroup:	TEEN	Pathway:	Vegetation (VEG)			Units:	m^2·mrem/yr / µCi/sec; mrem/yr / µCi/m^3 (H-3)	
Nuclide	**Bone**	**Liver**	**Thyroid**	**Kidney**	**Lung**	**Gilli**	**Skin**	**Total Body**
H-3	0.000E+00	2.590E+03	2.590E+03	2.590E+03	2.590E+03	2.590E+03	0.000E+00	2.590E+03
C-14	3.690E+08	7.380E+07	7.380E+07	7.380E+07	7.380E+07	7.380E+07	0.000E+00	7.380E+07
NA-24	2.390E+05	2.390E+05	2.390E+05	2.390E+05	2.390E+05	2.390E+05	0.000E+00	2.390E+05
P-32	1.610E+09	9.970E+07	0.000E+00	0.000E+00	0.000E+00	1.350E+08	0.000E+00	6.240E+07
CR-51	0.000E+00	0.000E+00	3.430E+04	1.350E+04	8.810E+04	1.040E+07	0.000E+00	6.170E+04
MN-54	0.000E+00	4.540E+08	0.000E+00	1.360E+08	0.000E+00	9.320E+08	0.000E+00	9.010E+07
MN-56	0.000E+00	1.420E+01	0.000E+00	1.800E+01	0.000E+00	9.360E+02	0.000E+00	2.530E+00
FE-55	3.260E+08	2.310E+08	0.000E+00	0.000E+00	1.470E+08	1.000E+08	0.000E+00	5.390E+07
FE-59	1.790E+08	4.190E+08	0.000E+00	0.000E+00	1.320E+08	9.900E+08	0.000E+00	1.620E+08
CO-58	0.000E+00	4.360E+07	0.000E+00	0.000E+00	0.000E+00	6.010E+08	0.000E+00	1.000E+08
CO-60	0.000E+00	2.490E+08	0.000E+00	0.000E+00	0.000E+00	3.240E+09	0.000E+00	5.600E+08
NI-63	1.610E+10	1.130E+09	0.000E+00	0.000E+00	0.000E+00	1.810E+08	0.000E+00	5.450E+08
NI-65	5.720E+01	7.310E+00	0.000E+00	0.000E+00	0.000E+00	3.970E+02	0.000E+00	3.330E+00
CU-64	0.000E+00	8.340E+03	0.000E+00	2.110E+04	0.000E+00	6.470E+05	0.000E+00	3.920E+03
ZN-65	4.240E+08	1.470E+09	0.000E+00	9.420E+08	0.000E+00	6.230E+08	0.000E+00	6.870E+08
ZN-69	5.140E-06	9.800E-06	0.000E+00	6.400E-06	0.000E+00	1.810E-05	0.000E+00	6.860E-07
BR-83	0.000E+00	0.000E+00	0.000E+00	0.000E+00	0.000E+00	0.000E+00	0.000E+00	2.910E+00
BR-84	0.000E+00	0.000E+00	0.000E+00	0.000E+00	0.000E+00	0.000E+00	0.000E+00	2.250E-11
BR-85	0.000E+00	0.000E+00	0.000E+00	0.000E+00	0.000E+00	0.000E+00	0.000E+00	0.000E+00
RB-86	0.000E+00	2.740E+08	0.000E+00	0.000E+00	0.000E+00	4.050E+07	0.000E+00	1.290E+08
RB-88	0.000E+00	3.170E-22	0.000E+00	0.000E+00	0.000E+00	2.720E-29	0.000E+00	1.690E-22
RB-89	0.000E+00	3.500E-26	0.000E+00	0.000E+00	0.000E+00	5.360E-35	0.000E+00	2.470E-26
SR-89	1.510E+10	0.000E+00	0.000E+00	0.000E+00	0.000E+00	1.800E+09	0.000E+00	4.340E+08
SR-90	7.510E+11	0.000E+00	0.000E+00	0.000E+00	0.000E+00	2.110E+10	0.000E+00	1.850E+11
SR-91	2.850E+05	0.000E+00	0.000E+00	0.000E+00	0.000E+00	1.290E+06	0.000E+00	1.130E+04

APPENDIX H

R_i Teen Dose Factors for use in the Gaseous Dose Calculations

Agegroup:	TEEN	Pathway:	Vegetation (VEG)			Units:	m^2·mrem/yr / µCi/sec; mrem/yr / µCi/m^3 (H-3)	
Nuclide	**Bone**	**Liver**	**Thyroid**	**Kidney**	**Lung**	**Gilli**	**Skin**	**Total Body**
SR-92	3.970E+02	0.000E+00	0.000E+00	0.000E+00	0.000E+00	1.010E+04	0.000E+00	1.690E+01
Y-90	1.240E+04	0.000E+00	0.000E+00	0.000E+00	0.000E+00	1.020E+08	0.000E+00	3.350E+02
Y-91	7.840E+06	0.000E+00	0.000E+00	0.000E+00	0.000E+00	3.210E+09	0.000E+00	2.100E+05
Y-91M	4.860E-09	0.000E+00	0.000E+00	0.000E+00	0.000E+00	2.290E-07	0.000E+00	1.860E-10
Y-92	8.600E-01	0.000E+00	0.000E+00	0.000E+00	0.000E+00	2.360E+04	0.000E+00	2.490E-02
Y-93	1.590E+02	0.000E+00	0.000E+00	0.000E+00	0.000E+00	4.860E+06	0.000E+00	4.360E+00
ZR-95	1.720E+06	5.430E+05	0.000E+00	7.980E+05	0.000E+00	1.250E+09	0.000E+00	3.730E+05
ZR-97	3.120E+02	6.180E+01	0.000E+00	9.370E+01	0.000E+00	1.670E+07	0.000E+00	2.850E+01
NB-95	1.920E+05	1.070E+05	0.000E+00	1.030E+05	0.000E+00	4.560E+08	0.000E+00	5.870E+04
MO-99	0.000E+00	5.650E+06	0.000E+00	1.290E+07	0.000E+00	1.010E+07	0.000E+00	1.080E+06
TC-99M	2.740E+00	7.630E+00	0.000E+00	1.140E+02	4.240E+00	5.010E+03	0.000E+00	9.890E+01
TC-101	7.640E-31	1.090E-30	0.000E+00	1.970E-29	6.620E-31	1.860E-37	0.000E+00	1.070E-29
RU-103	6.820E+06	0.000E+00	0.000E+00	2.400E+07	0.000E+00	5.700E+08	0.000E+00	2.920E+06
RU-105	5.000E+01	0.000E+00	0.000E+00	6.310E+02	0.000E+00	4.040E+04	0.000E+00	1.940E+01
RU-106	3.100E+08	0.000E+00	0.000E+00	5.970E+08	0.000E+00	1.480E+10	0.000E+00	3.900E+07
AG-110M	1.520E+07	1.430E+07	0.000E+00	2.740E+07	0.000E+00	4.030E+09	0.000E+00	8.720E+06
TE-125M	1.480E+08	5.340E+07	4.140E+07	0.000E+00	0.000E+00	4.370E+08	0.000E+00	1.980E+07
TE-127	5.330E+03	1.890E+03	3.680E+03	2.160E+04	0.000E+00	4.120E+05	0.000E+00	1.150E+03
TE-127M	5.510E+08	1.960E+08	1.310E+08	2.240E+09	0.000E+00	1.370E+09	0.000E+00	6.560E+07
TE-129	7.140E-04	2.660E-04	5.100E-04	3.000E-03	0.000E+00	3.910E-03	0.000E+00	1.740E-04
TE-129M	3.620E+08	1.340E+08	1.170E+08	1.510E+09	0.000E+00	1.360E+09	0.000E+00	5.730E+07
TE-131	1.390E-15	5.750E-16	1.070E-15	6.100E-15	0.000E+00	1.140E-16	0.000E+00	4.360E-16
TE-131M	8.440E+05	4.050E+05	6.090E+05	4.220E+06	0.000E+00	3.250E+07	0.000E+00	3.380E+05
TE-132	3.910E+06	2.470E+06	2.610E+06	2.370E+07	0.000E+00	7.840E+07	0.000E+00	2.330E+06
I-130	3.510E+05	1.010E+06	8.280E+07	1.560E+06	0.000E+00	7.800E+05	0.000E+00	4.050E+05

APPENDIX H

R_i Teen Dose Factors for use in the Gaseous Dose Calculations

Agegroup:	TEEN	Pathway:	Vegetation (VEG)			Units:	m^2·mrem/yr / µCi/sec; mrem/yr / µCi/m^3 (H-3)	
Nuclide	**Bone**	**Liver**	**Thyroid**	**Kidney**	**Lung**	**Gilli**	**Skin**	**Total Body**
I-131	7.690E+07	1.080E+08	3.140E+10	1.850E+08	0.000E+00	2.130E+07	0.000E+00	5.780E+07
I-132	5.190E+01	1.360E+02	4.580E+03	2.140E+02	0.000E+00	5.920E+01	0.000E+00	4.880E+01
I-133	1.940E+06	3.290E+06	4.590E+08	5.760E+06	0.000E+00	2.490E+06	0.000E+00	1.000E+06
I-134	8.720E-05	2.310E-04	3.850E-03	3.640E-04	0.000E+00	3.050E-06	0.000E+00	8.310E-05
I-135	3.520E+04	9.070E+04	5.830E+06	1.430E+05	0.000E+00	1.000E+05	0.000E+00	3.360E+04
CS-134	7.100E+09	1.670E+10	0.000E+00	5.310E+09	2.030E+09	2.080E+08	0.000E+00	7.750E+09
CS-136	4.370E+07	1.720E+08	0.000E+00	9.370E+07	1.480E+07	1.380E+07	0.000E+00	1.160E+08
CS-137	1.010E+10	1.350E+10	0.000E+00	4.590E+09	1.780E+09	1.920E+08	0.000E+00	4.690E+09
CS-138	3.610E-11	6.940E-11	0.000E+00	5.120E-11	5.960E-12	3.150E-14	0.000E+00	3.470E-11
BA-139	2.690E-02	1.890E-05	0.000E+00	1.780E-05	1.300E-05	2.400E-01	0.000E+00	7.830E-04
BA-140	1.380E+08	1.690E+05	0.000E+00	5.740E+04	1.140E+05	2.130E+08	0.000E+00	8.900E+06
BA-141	1.080E-21	8.040E-25	0.000E+00	7.460E-25	5.500E-25	2.290E-27	0.000E+00	3.590E-23
BA-142	5.490E-39	5.490E-42	0.000E+00	4.640E-42	3.650E-42	1.680E-50	0.000E+00	3.380E-40
LA-140	1.810E+03	8.880E+02	0.000E+00	0.000E+00	0.000E+00	5.100E+07	0.000E+00	2.360E+02
LA-142	1.850E-04	8.240E-05	0.000E+00	0.000E+00	0.000E+00	2.510E+00	0.000E+00	2.050E-05
CE-141	2.830E+05	1.890E+05	0.000E+00	8.890E+04	0.000E+00	5.400E+08	0.000E+00	2.170E+04
CE-143	9.330E+02	6.790E+05	0.000E+00	3.040E+02	0.000E+00	2.040E+07	0.000E+00	7.580E+01
CE-144	5.270E+07	2.180E+07	0.000E+00	1.300E+07	0.000E+00	1.330E+10	0.000E+00	2.830E+06
PR-143	7.000E+04	2.800E+04	0.000E+00	1.630E+04	0.000E+00	2.300E+08	0.000E+00	3.490E+03
PR-144	2.900E-26	1.190E-26	0.000E+00	6.800E-27	0.000E+00	3.190E-29	0.000E+00	1.470E-27
ND-147	3.620E+04	3.940E+04	0.000E+00	2.310E+04	0.000E+00	1.420E+08	0.000E+00	2.360E+03
W-187	3.540E+04	2.880E+04	0.000E+00	0.000E+00	0.000E+00	7.800E+06	0.000E+00	1.010E+04
NP-239	1.390E+03	1.310E+02	0.000E+00	4.100E+02	0.000E+00	2.100E+07	0.000E+00	7.260E+01

APPENDIX H

R_i Teen Dose Factors for use in the Gaseous Dose Calculations

Agegroup:	TEEN	Pathway:	Inhalation (INHL)			Units:	mrem/yr / µCi/m^3	
Nuclide	**Bone**	**Liver**	**Thyroid**	**Kidney**	**Lung**	**Gilli**	**Skin**	**Total Body**
H-3	0.000E+00	1.270E+03	1.270E+03	1.270E+03	1.270E+03	1.270E+03	0.000E+00	1.270E+03
C-14	2.600E+04	4.870E+03	4.870E+03	4.870E+03	4.870E+03	4.870E+03	0.000E+00	4.870E+03
NA-24	1.380E+04	1.380E+04	1.380E+04	1.380E+04	1.380E+04	1.380E+04	0.000E+00	1.380E+04
P-32	1.890E+06	1.100E+05	0.000E+00	0.000E+00	0.000E+00	9.280E+04	0.000E+00	7.160E+04
CR-51	0.000E+00	0.000E+00	7.500E+01	3.070E+01	2.100E+04	3.000E+03	0.000E+00	1.350E+02
MN-54	0.000E+00	5.110E+04	0.000E+00	1.270E+04	1.980E+06	6.680E+04	0.000E+00	8.400E+03
MN-56	0.000E+00	1.700E+00	0.000E+00	1.790E+00	1.520E+04	5.740E+04	0.000E+00	2.520E-01
FE-55	3.340E+04	2.380E+04	0.000E+00	0.000E+00	1.240E+05	6.390E+03	0.000E+00	5.540E+03
FE-59	1.590E+04	3.700E+04	0.000E+00	0.000E+00	1.530E+06	1.780E+05	0.000E+00	1.430E+04
CO-58	0.000E+00	2.070E+03	0.000E+00	0.000E+00	1.340E+06	9.520E+04	0.000E+00	2.780E+03
CO-60	0.000E+00	1.510E+04	0.000E+00	0.000E+00	8.720E+06	2.590E+05	0.000E+00	1.980E+04
NI-63	5.800E+05	4.340E+04	0.000E+00	0.000E+00	3.070E+05	1.420E+04	0.000E+00	1.980E+04
NI-65	2.180E+00	2.930E-01	0.000E+00	0.000E+00	9.360E+03	3.670E+04	0.000E+00	1.270E-01
CU-64	0.000E+00	2.030E+00	0.000E+00	6.410E+00	1.110E+04	6.140E+04	0.000E+00	8.480E-01
ZN-65	3.860E+04	1.340E+05	0.000E+00	8.640E+04	1.240E+06	4.660E+04	0.000E+00	6.240E+04
ZN-69	4.830E-02	9.200E-02	0.000E+00	6.020E-02	1.580E+03	2.850E+02	0.000E+00	6.460E-03
BR-83	0.000E+00	0.000E+00	0.000E+00	0.000E+00	0.000E+00	0.000E+00	0.000E+00	3.440E+02
BR-84	0.000E+00	0.000E+00	0.000E+00	0.000E+00	0.000E+00	0.000E+00	0.000E+00	4.330E+02
BR-85	0.000E+00	0.000E+00	0.000E+00	0.000E+00	0.000E+00	0.000E+00	0.000E+00	1.830E+01
RB-86	0.000E+00	1.900E+05	0.000E+00	0.000E+00	0.000E+00	1.770E+04	0.000E+00	8.400E+04
RB-88	0.000E+00	5.460E+02	0.000E+00	0.000E+00	0.000E+00	2.920E-05	0.000E+00	2.720E+02
RB-89	0.000E+00	3.520E+02	0.000E+00	0.000E+00	0.000E+00	3.380E-07	0.000E+00	2.330E+02
SR-89	4.340E+05	0.000E+00	0.000E+00	0.000E+00	2.420E+06	3.710E+05	0.000E+00	1.250E+04
SR-90	1.080E+08	0.000E+00	0.000E+00	0.000E+00	1.650E+07	7.650E+05	0.000E+00	6.680E+06
SR-91	8.800E+01	0.000E+00	0.000E+00	0.000E+00	6.070E+04	2.590E+05	0.000E+00	3.510E+00

APPENDIX H

R_i Teen Dose Factors for use in the Gaseous Dose Calculations

Agegroup:	TEEN	Pathway:	Inhalation (INHL)			Units:	mrem/yr / µCi/m^3	
Nuclide	**Bone**	**Liver**	**Thyroid**	**Kidney**	**Lung**	**Gilli**	**Skin**	**Total Body**
SR-92	9.520E+00	0.000E+00	0.000E+00	0.000E+00	2.740E+04	1.190E+05	0.000E+00	4.060E-01
Y-90	2.980E+03	0.000E+00	0.000E+00	0.000E+00	2.930E+05	5.590E+05	0.000E+00	8.000E+01
Y-91	6.610E+05	0.000E+00	0.000E+00	0.000E+00	2.940E+06	4.090E+05	0.000E+00	1.770E+04
Y-91M	3.700E-01	0.000E+00	0.000E+00	0.000E+00	3.200E+03	3.020E+01	0.000E+00	1.420E-02
Y-92	1.470E+01	0.000E+00	0.000E+00	0.000E+00	2.680E+04	1.650E+05	0.000E+00	4.290E-01
Y-93	1.350E+02	0.000E+00	0.000E+00	0.000E+00	8.320E+04	5.790E+05	0.000E+00	3.720E+00
ZR-95	1.460E+05	4.580E+04	0.000E+00	6.740E+04	2.690E+06	1.490E+05	0.000E+00	3.150E+04
ZR-97	1.380E+02	2.720E+01	0.000E+00	4.120E+01	1.300E+05	6.300E+05	0.000E+00	1.260E+01
NB-95	1.860E+04	1.030E+04	0.000E+00	1.000E+04	7.510E+05	9.680E+04	0.000E+00	5.660E+03
MO-99	0.000E+00	1.690E+02	0.000E+00	4.110E+02	1.540E+05	2.690E+05	0.000E+00	3.220E+01
TC-99M	1.380E-03	3.860E-03	0.000E+00	5.760E-02	1.150E+03	6.130E+03	0.000E+00	4.990E-02
TC-101	5.920E-05	8.400E-05	0.000E+00	1.520E-03	6.670E+02	8.720E-07	0.000E+00	8.240E-04
RU-103	2.100E+03	0.000E+00	0.000E+00	7.430E+03	7.830E+05	1.090E+05	0.000E+00	8.960E+02
RU-105	1.120E+00	0.000E+00	0.000E+00	1.410E+00	1.820E+04	9.040E+04	0.000E+00	4.340E-01
RU-106	9.840E+04	0.000E+00	0.000E+00	1.900E+05	1.610E+07	9.600E+05	0.000E+00	1.240E+04
AG-110M	1.380E+04	1.310E+04	0.000E+00	2.500E+04	6.750E+06	2.730E+05	0.000E+00	7.990E+03
TE-125M	4.880E+03	2.240E+03	1.400E+03	0.000E+00	5.360E+05	7.500E+04	0.000E+00	6.670E+02
TE-127	2.010E+00	9.120E-01	1.420E+00	7.280E+00	1.120E+04	8.080E+04	0.000E+00	4.420E-01
TE-127M	1.800E+04	8.160E+03	4.380E+03	6.540E+04	1.660E+06	1.590E+05	0.000E+00	2.180E+03
TE-129	7.100E-02	3.380E-02	5.180E-02	2.660E-01	3.300E+03	1.620E+03	0.000E+00	1.760E-02
TE-129M	1.390E+04	6.580E+03	4.580E+03	5.190E+04	1.980E+06	4.050E+05	0.000E+00	2.250E+03
TE-131	1.580E-02	8.320E-03	1.240E-02	6.180E-02	2.340E+03	1.510E+01	0.000E+00	5.040E-03
TE-131M	9.840E+01	6.010E+01	7.250E+01	4.390E+02	2.380E+05	6.210E+05	0.000E+00	4.020E+01
TE-132	3.600E+02	2.900E+02	2.460E+02	1.950E+03	4.490E+05	4.630E+05	0.000E+00	2.190E+02
I-130	6.240E+03	1.790E+04	1.490E+06	2.750E+04	0.000E+00	9.120E+03	0.000E+00	7.170E+03

APPENDIX H

R_i Teen Dose Factors for use in the Gaseous Dose Calculations

Agegroup:	TEEN	Pathway:	Inhalation (INHL)			Units:	mrem/yr / µCi/m^3	
Nuclide	**Bone**	**Liver**	**Thyroid**	**Kidney**	**Lung**	**Gilli**	**Skin**	**Total Body**
I-131	3.540E+04	4.910E+04	1.460E+07	8.400E+04	0.000E+00	6.490E+03	0.000E+00	2.640E+04
I-132	1.590E+03	4.380E+03	1.510E+05	6.920E+03	0.000E+00	1.270E+03	0.000E+00	1.580E+03
I-133	1.220E+04	2.050E+04	2.920E+06	3.590E+04	0.000E+00	1.030E+04	0.000E+00	6.220E+03
I-134	8.880E+02	2.320E+03	3.950E+04	3.660E+03	0.000E+00	2.040E+01	0.000E+00	8.400E+02
I-135	3.700E+03	9.440E+03	6.210E+05	1.490E+04	0.000E+00	6.950E+03	0.000E+00	3.490E+03
CS-134	5.020E+05	1.130E+06	0.000E+00	3.750E+05	1.460E+05	9.760E+03	0.000E+00	5.490E+05
CS-136	5.150E+04	1.940E+05	0.000E+00	1.100E+05	1.780E+04	1.090E+04	0.000E+00	1.370E+05
CS-137	6.700E+05	8.480E+05	0.000E+00	3.040E+05	1.210E+05	8.480E+03	0.000E+00	3.110E+05
CS-138	4.660E+02	8.560E+02	0.000E+00	6.620E+02	7.870E+01	2.700E-01	0.000E+00	4.460E+02
BA-139	1.340E+00	9.440E-04	0.000E+00	8.880E-04	6.460E+03	6.450E+03	0.000E+00	3.900E-02
BA-140	5.470E+04	6.700E+01	0.000E+00	2.280E+01	2.030E+06	2.290E+05	0.000E+00	3.520E+03
BA-141	1.420E-01	1.060E-04	0.000E+00	9.840E-05	3.290E+03	7.460E-04	0.000E+00	4.740E-03
BA-142	3.700E-02	3.700E-05	0.000E+00	3.140E-05	1.910E+03	4.790E-10	0.000E+00	2.270E-03
LA-140	4.790E+02	2.360E+02	0.000E+00	0.000E+00	2.140E+05	4.870E+05	0.000E+00	6.260E+01
LA-142	9.600E-01	4.250E-01	0.000E+00	0.000E+00	1.020E+04	1.200E+04	0.000E+00	1.060E-01
CE-141	2.840E+04	1.900E+04	0.000E+00	8.880E+03	6.140E+05	1.260E+05	0.000E+00	2.170E+03
CE-143	2.660E+02	1.940E+02	0.000E+00	8.640E+01	1.300E+05	2.550E+05	0.000E+00	2.160E+01
CE-144	4.890E+06	2.020E+06	0.000E+00	1.210E+06	1.340E+07	8.640E+05	0.000E+00	2.620E+05
PR-143	1.340E+04	5.310E+03	0.000E+00	3.090E+03	4.830E+05	2.140E+05	0.000E+00	6.620E+02
PR-144	4.300E-02	1.760E-02	0.000E+00	1.010E-02	1.750E+03	2.350E-04	0.000E+00	2.180E-03
ND-147	7.860E+03	8.560E+03	0.000E+00	5.020E+03	3.720E+05	1.820E+05	0.000E+00	5.130E+02
W-187	1.200E+01	9.760E+00	0.000E+00	0.000E+00	4.740E+04	1.770E+05	0.000E+00	3.430E+00
NP-239	3.380E+02	3.190E+01	0.000E+00	1.000E+02	6.490E+04	1.320E+05	0.000E+00	1.770E+01

APPENDIX H

R_i Teen Dose Factors for use in the Gaseous Dose Calculations

Agegroup:	TEEN	Pathway:	Ground Plane Deposition (GPD)			Units:	m^2·mrem/yr / µCi/sec	
Nuclide	**Bone**	**Liver**	**Thyroid**	**Kidney**	**Lung**	**Gilli**	**Skin**	**Total Body**
H-3	0.000E+00	0.000E+00	0.000E+00	0.000E+00	0.000E+00	0.000E+00	0.000E+00	0.000E+00
C-14	0.000E+00	0.000E+00	0.000E+00	0.000E+00	0.000E+00	0.000E+00	0.000E+00	0.000E+00
NA-24	1.190E+07	1.190E+07	1.190E+07	1.190E+07	1.190E+07	1.190E+07	1.390E+07	1.190E+07
P-32	0.000E+00	0.000E+00	0.000E+00	0.000E+00	0.000E+00	0.000E+00	0.000E+00	0.000E+00
CR-51	4.660E+06	4.660E+06	4.660E+06	4.660E+06	4.660E+06	4.660E+06	5.510E+06	4.660E+06
MN-54	1.390E+09	1.390E+09	1.390E+09	1.390E+09	1.390E+09	1.390E+09	1.630E+09	1.390E+09
MN-56	9.020E+05	9.020E+05	9.020E+05	9.020E+05	9.020E+05	9.020E+05	1.070E+06	9.020E+05
FE-55	0.000E+00	0.000E+00	0.000E+00	0.000E+00	0.000E+00	0.000E+00	0.000E+00	0.000E+00
FE-59	2.730E+08	2.730E+08	2.730E+08	2.730E+08	2.730E+08	2.730E+08	3.210E+08	2.730E+08
CO-58	3.790E+08	3.790E+08	3.790E+08	3.790E+08	3.790E+08	3.790E+08	4.440E+08	3.790E+08
CO-60	2.150E+10	2.150E+10	2.150E+10	2.150E+10	2.150E+10	2.150E+10	2.530E+10	2.150E+10
NI-63	0.000E+00	0.000E+00	0.000E+00	0.000E+00	0.000E+00	0.000E+00	0.000E+00	0.000E+00
NI-65	2.970E+05	2.970E+05	2.970E+05	2.970E+05	2.970E+05	2.970E+05	3.450E+05	2.970E+05
CU-64	6.070E+05	6.070E+05	6.070E+05	6.070E+05	6.070E+05	6.070E+05	6.880E+05	6.070E+05
ZN-65	7.470E+08	7.470E+08	7.470E+08	7.470E+08	7.470E+08	7.470E+08	8.590E+08	7.470E+08
ZN-69	0.000E+00	0.000E+00	0.000E+00	0.000E+00	0.000E+00	0.000E+00	0.000E+00	0.000E+00
BR-83	4.870E+03	4.870E+03	4.870E+03	4.870E+03	4.870E+03	4.870E+03	7.080E+03	4.870E+03
BR-84	2.030E+05	2.030E+05	2.030E+05	2.030E+05	2.030E+05	2.030E+05	2.360E+05	2.030E+05
BR-85	0.000E+00	0.000E+00	0.000E+00	0.000E+00	0.000E+00	0.000E+00	0.000E+00	0.000E+00
RB-86	8.990E+06	8.990E+06	8.990E+06	8.990E+06	8.990E+06	8.990E+06	1.030E+07	8.990E+06
RB-88	3.310E+04	3.310E+04	3.310E+04	3.310E+04	3.310E+04	3.310E+04	3.780E+04	3.310E+04
RB-89	1.230E+05	1.230E+05	1.230E+05	1.230E+05	1.230E+05	1.230E+05	1.480E+05	1.230E+05
SR-89	2.160E+04	2.160E+04	2.160E+04	2.160E+04	2.160E+04	2.160E+04	2.510E+04	2.160E+04
SR-90	0.000E+00	0.000E+00	0.000E+00	0.000E+00	0.000E+00	0.000E+00	0.000E+00	0.000E+00
SR-91	2.150E+06	2.150E+06	2.150E+06	2.150E+06	2.150E+06	2.150E+06	2.510E+06	2.150E+06

APPENDIX H

R_i Teen Dose Factors for use in the Gaseous Dose Calculations

Agegroup:	TEEN	Pathway:	Ground Plane Deposition (GPD)			Units:	m^2·mrem/yr / µCi/sec	
Nuclide	**Bone**	**Liver**	**Thyroid**	**Kidney**	**Lung**	**Gilli**	**Skin**	**Total Body**
SR-92	7.770E+05	7.770E+05	7.770E+05	7.770E+05	7.770E+05	7.770E+05	8.630E+05	7.770E+05
Y-90	4.490E+03	4.490E+03	4.490E+03	4.490E+03	4.490E+03	4.490E+03	5.310E+03	4.490E+03
Y-91	1.070E+06	1.070E+06	1.070E+06	1.070E+06	1.070E+06	1.070E+06	1.210E+06	1.070E+06
Y-91M	1.000E+05	1.000E+05	1.000E+05	1.000E+05	1.000E+05	1.000E+05	1.160E+05	1.000E+05
Y-92	1.800E+05	1.800E+05	1.800E+05	1.800E+05	1.800E+05	1.800E+05	2.140E+05	1.800E+05
Y-93	1.830E+05	1.830E+05	1.830E+05	1.830E+05	1.830E+05	1.830E+05	2.510E+05	1.830E+05
ZR-95	2.450E+08	2.450E+08	2.450E+08	2.450E+08	2.450E+08	2.450E+08	2.840E+08	2.450E+08
ZR-97	2.960E+06	2.960E+06	2.960E+06	2.960E+06	2.960E+06	2.960E+06	3.440E+06	2.960E+06
NB-95	1.370E+08	1.370E+08	1.370E+08	1.370E+08	1.370E+08	1.370E+08	1.610E+08	1.370E+08
MO-99	3.990E+06	3.990E+06	3.990E+06	3.990E+06	3.990E+06	3.990E+06	4.630E+06	3.990E+06
TC-99M	1.840E+05	1.840E+05	1.840E+05	1.840E+05	1.840E+05	1.840E+05	2.110E+05	1.840E+05
TC-101	2.040E+04	2.040E+04	2.040E+04	2.040E+04	2.040E+04	2.040E+04	2.260E+04	2.040E+04
RU-103	1.080E+08	1.080E+08	1.080E+08	1.080E+08	1.080E+08	1.080E+08	1.260E+08	1.080E+08
RU-105	6.360E+05	6.360E+05	6.360E+05	6.360E+05	6.360E+05	6.360E+05	7.210E+05	6.360E+05
RU-106	4.220E+08	4.220E+08	4.220E+08	4.220E+08	4.220E+08	4.220E+08	5.070E+08	4.220E+08
AG-110M	3.440E+09	3.440E+09	3.440E+09	3.440E+09	3.440E+09	3.440E+09	4.010E+09	3.440E+09
TE-125M	1.550E+06	1.550E+06	1.550E+06	1.550E+06	1.550E+06	1.550E+06	2.130E+06	1.550E+06
TE-127	2.980E+03	2.980E+03	2.980E+03	2.980E+03	2.980E+03	2.980E+03	3.280E+03	2.980E+03
TE-127M	9.160E+04	9.160E+04	9.160E+04	9.160E+04	9.160E+04	9.160E+04	1.080E+05	9.160E+04
TE-129	2.620E+04	2.620E+04	2.620E+04	2.620E+04	2.620E+04	2.620E+04	3.100E+04	2.620E+04
TE-129M	1.980E+07	1.980E+07	1.980E+07	1.980E+07	1.980E+07	1.980E+07	2.310E+07	1.980E+07
TE-131	2.920E+04	2.920E+04	2.920E+04	2.920E+04	2.920E+04	2.920E+04	3.450E+07	2.920E+04
TE-131M	8.030E+06	8.030E+06	8.030E+06	8.030E+06	8.030E+06	8.030E+06	9.460E+06	8.030E+06
TE-132	4.230E+06	4.230E+06	4.230E+06	4.230E+06	4.230E+06	4.230E+06	4.980E+06	4.230E+06
I-130	5.510E+06	5.510E+06	5.510E+06	5.510E+06	5.510E+06	5.510E+06	6.690E+06	5.510E+06

APPENDIX H

R_i Teen Dose Factors for use in the Gaseous Dose Calculations

Agegroup:	TEEN	Pathway:	Ground Plane Deposition (GPD)			Units:	m^2·mrem/yr / µCi/sec	
Nuclide	**Bone**	**Liver**	**Thyroid**	**Kidney**	**Lung**	**Gilli**	**Skin**	**Total Body**
I-131	1.720E+07	1.720E+07	1.720E+07	1.720E+07	1.720E+07	1.720E+07	2.090E+07	1.720E+07
I-132	1.250E+06	1.250E+06	1.250E+06	1.250E+06	1.250E+06	1.250E+06	1.470E+06	1.250E+06
I-133	2.450E+06	2.450E+06	2.450E+06	2.450E+06	2.450E+06	2.450E+06	2.980E+06	2.450E+06
I-134	4.470E+05	4.470E+05	4.470E+05	4.470E+05	4.470E+05	4.470E+05	5.300E+05	4.470E+05
I-135	2.530E+06	2.530E+06	2.530E+06	2.530E+06	2.530E+06	2.530E+06	2.950E+06	2.530E+06
CS-134	6.860E+09	6.860E+09	6.860E+09	6.860E+09	6.860E+09	6.860E+09	8.000E+09	6.860E+09
CS-136	1.510E+08	1.510E+08	1.510E+08	1.510E+08	1.510E+08	1.510E+08	1.710E+08	1.510E+08
CS-137	1.030E+10	1.030E+10	1.030E+10	1.030E+10	1.030E+10	1.030E+10	1.200E+10	1.030E+10
CS-138	3.590E+05	3.590E+05	3.590E+05	3.590E+05	3.590E+05	3.590E+05	4.100E+05	3.590E+05
BA-139	1.060E+05	1.060E+05	1.060E+05	1.060E+05	1.060E+05	1.060E+05	1.190E+05	1.060E+05
BA-140	2.050E+07	2.050E+07	2.050E+07	2.050E+07	2.050E+07	2.050E+07	2.350E+07	2.050E+07
BA-141	4.170E+04	4.170E+04	4.170E+04	4.170E+04	4.170E+04	4.170E+04	4.750E+04	4.170E+04
BA-142	4.490E+04	4.490E+04	4.490E+04	4.490E+04	4.490E+04	4.490E+04	5.110E+04	4.490E+04
LA-140	1.920E+07	1.920E+07	1.920E+07	1.920E+07	1.920E+07	1.920E+07	2.180E+07	1.920E+07
LA-142	7.600E+05	7.600E+05	7.600E+05	7.600E+05	7.600E+05	7.600E+05	9.120E+05	7.600E+05
CE-141	1.370E+07	1.370E+07	1.370E+07	1.370E+07	1.370E+07	1.370E+07	1.540E+07	1.370E+07
CE-143	2.310E+06	2.310E+06	2.310E+06	2.310E+06	2.310E+06	2.310E+06	2.630E+06	2.310E+06
CE-144	6.950E+07	6.950E+07	6.950E+07	6.950E+07	6.950E+07	6.950E+07	8.040E+07	6.950E+07
PR-143	0.000E+00	0.000E+00	0.000E+00	0.000E+00	0.000E+00	0.000E+00	0.000E+00	0.000E+00
PR-144	1.830E+03	1.830E+03	1.830E+03	1.830E+03	1.830E+03	1.830E+03	2.110E+03	1.830E+03
ND-147	8.390E+06	8.390E+06	8.390E+06	8.390E+06	8.390E+06	8.390E+06	1.010E+07	8.390E+06
W-187	2.350E+06	2.350E+06	2.350E+06	2.350E+06	2.350E+06	2.350E+06	2.730E+06	2.350E+06
NP-239	1.710E+06	1.710E+06	1.710E+06	1.710E+06	1.710E+06	1.710E+06	1.980E+06	1.710E+06

APPENDIX I

R_i Child Dose Factors for use in the Gaseous Dose Calculations

Agegroup:	CHILD	Pathway:	Grs/Cow/Milk (CMILK)			Units:	m^2·mrem/yr / µCi/sec; mrem/yr / µCi/m^3 (H-3)	
Nuclide	**Bone**	**Liver**	**Thyroid**	**Kidney**	**Lung**	**Gilli**	**Skin**	**Total Body**
H-3	0.000E+00	1.570E+03	1.570E+03	1.570E+03	1.570E+03	1.570E+03	0.000E+00	1.570E+03
C-14	1.190E+09	2.390E+08	2.390E+08	2.390E+08	2.390E+08	2.390E+08	0.000E+00	2.390E+08
NA-24	8.850E+06	8.850E+06	8.850E+06	8.850E+06	8.850E+06	8.850E+06	0.000E+00	8.850E+06
P-32	7.780E+10	3.640E+09	0.000E+00	0.000E+00	0.000E+00	2.150E+09	0.000E+00	3.000E+09
CR-51	0.000E+00	0.000E+00	5.650E+04	1.540E+04	1.030E+05	5.400E+06	0.000E+00	1.020E+05
MN-54	0.000E+00	2.100E+07	0.000E+00	5.880E+06	0.000E+00	1.760E+07	0.000E+00	5.590E+06
MN-56	0.000E+00	1.260E-02	0.000E+00	1.530E-02	0.000E+00	1.830E+00	0.000E+00	2.860E-03
FE-55	1.120E+08	5.930E+07	0.000E+00	0.000E+00	3.350E+07	1.100E+07	0.000E+00	1.840E+07
FE-59	1.200E+08	1.950E+08	0.000E+00	0.000E+00	5.640E+07	2.030E+08	0.000E+00	9.690E+07
CO-58	0.000E+00	1.210E+07	0.000E+00	0.000E+00	0.000E+00	7.070E+07	0.000E+00	3.710E+07
CO-60	0.000E+00	4.320E+07	0.000E+00	0.000E+00	0.000E+00	2.390E+08	0.000E+00	1.270E+08
NI-63	2.960E+10	1.590E+09	0.000E+00	0.000E+00	0.000E+00	1.070E+08	0.000E+00	1.010E+09
NI-65	1.660E+00	1.560E-01	0.000E+00	0.000E+00	0.000E+00	1.910E+01	0.000E+00	9.100E-02
CU-64	0.000E+00	7.460E+04	0.000E+00	1.800E+05	0.000E+00	3.500E+06	0.000E+00	4.510E+04
ZN-65	4.130E+09	1.100E+10	0.000E+00	6.940E+09	0.000E+00	1.930E+09	0.000E+00	6.850E+09
ZN-69	9.460E-12	1.370E-11	0.000E+00	8.300E-12	0.000E+00	8.620E-10	0.000E+00	1.260E-12
BR-83	0.000E+00	0.000E+00	0.000E+00	0.000E+00	0.000E+00	0.000E+00	0.000E+00	4.400E-01
BR-84	0.000E+00	0.000E+00	0.000E+00	0.000E+00	0.000E+00	0.000E+00	0.000E+00	6.510E-23
BR-85	0.000E+00	0.000E+00	0.000E+00	0.000E+00	0.000E+00	0.000E+00	0.000E+00	0.000E+00
RB-86	0.000E+00	8.770E+09	0.000E+00	0.000E+00	0.000E+00	5.640E+08	0.000E+00	5.390E+09
RB-88	0.000E+00	7.160E-45	0.000E+00	0.000E+00	0.000E+00	3.510E-46	0.000E+00	4.970E-45
RB-89	0.000E+00	1.340E-52	0.000E+00	0.000E+00	0.000E+00	1.170E-54	0.000E+00	1.190E-52
SR-89	6.620E+09	0.000E+00	0.000E+00	0.000E+00	0.000E+00	2.560E+08	0.000E+00	1.890E+08
SR-90	1.120E+11	0.000E+00	0.000E+00	0.000E+00	0.000E+00	1.510E+09	0.000E+00	2.830E+10
SR-91	1.300E+05	0.000E+00	0.000E+00	0.000E+00	0.000E+00	2.880E+05	0.000E+00	4.920E+03

APPENDIX I

R_i Child Dose Factors for use in the Gaseous Dose Calculations

Agegroup:	CHILD	Pathway:	Grs/Cow/Milk (CMILK)			Units:	m^2·mrem/yr / µCi/sec; mrem/yr / µCi/m^3 (H-3)	
Nuclide	**Bone**	**Liver**	**Thyroid**	**Kidney**	**Lung**	**Gilli**	**Skin**	**Total Body**
SR-92	2.180E+00	0.000E+00	0.000E+00	0.000E+00	0.000E+00	4.130E+01	0.000E+00	8.750E-02
Y-90	3.220E+02	0.000E+00	0.000E+00	0.000E+00	0.000E+00	9.170E+05	0.000E+00	8.620E+00
Y-91	3.900E+04	0.000E+00	0.000E+00	0.000E+00	0.000E+00	5.200E+06	0.000E+00	1.040E+03
Y-91M	2.670E-19	0.000E+00	0.000E+00	0.000E+00	0.000E+00	5.240E-16	0.000E+00	9.730E-21
Y-92	2.530E-04	0.000E+00	0.000E+00	0.000E+00	0.000E+00	7.310E+00	0.000E+00	7.240E-06
Y-93	1.010E+00	0.000E+00	0.000E+00	0.000E+00	0.000E+00	1.510E+04	0.000E+00	2.780E-02
ZR-95	3.830E+03	8.420E+02	0.000E+00	1.210E+03	0.000E+00	8.790E+05	0.000E+00	7.500E+02
ZR-97	1.920E+00	2.770E-01	0.000E+00	3.980E-01	0.000E+00	4.200E+04	0.000E+00	1.640E-01
NB-95	3.180E+05	1.240E+05	0.000E+00	1.160E+05	0.000E+00	2.290E+08	0.000E+00	8.840E+04
MO-99	0.000E+00	8.140E+07	0.000E+00	1.740E+08	0.000E+00	6.730E+07	0.000E+00	2.010E+07
TC-99M	1.320E+01	2.590E+01	0.000E+00	3.760E+02	1.320E+01	1.470E+04	0.000E+00	4.290E+02
TC-101	1.160E-59	1.220E-59	0.000E+00	2.080E-58	6.440E-60	3.870E-59	0.000E+00	1.540E-58
RU-103	4.280E+03	0.000E+00	0.000E+00	1.080E+04	0.000E+00	1.110E+05	0.000E+00	1.650E+03
RU-105	3.820E-03	0.000E+00	0.000E+00	3.360E-02	0.000E+00	2.490E+00	0.000E+00	1.390E-03
RU-106	9.240E+04	0.000E+00	0.000E+00	1.250E+05	0.000E+00	1.440E+06	0.000E+00	1.150E+04
AG-110M	2.090E+08	1.410E+08	0.000E+00	2.630E+08	0.000E+00	1.680E+10	0.000E+00	1.130E+08
TE-125M	7.380E+07	2.000E+07	2.070E+07	0.000E+00	0.000E+00	7.120E+07	0.000E+00	9.840E+06
TE-127	2.980E+03	8.020E+02	2.060E+03	8.470E+03	0.000E+00	1.160E+05	0.000E+00	6.380E+02
TE-127M	2.080E+08	5.600E+07	4.970E+07	5.930E+08	0.000E+00	1.680E+08	0.000E+00	2.470E+07
TE-129	1.280E-09	3.580E-10	9.160E-10	3.750E-09	0.000E+00	7.990E-08	0.000E+00	3.050E-10
TE-129M	2.710E+08	7.580E+07	8.750E+07	7.970E+08	0.000E+00	3.310E+08	0.000E+00	4.210E+07
TE-131	1.620E-32	4.920E-33	1.240E-32	4.890E-32	0.000E+00	8.490E-32	0.000E+00	4.810E-33
TE-131M	1.600E+06	5.530E+05	1.140E+06	5.350E+06	0.000E+00	2.240E+07	0.000E+00	5.890E+05
TE-132	1.020E+07	4.530E+06	6.600E+06	4.210E+07	0.000E+00	4.570E+07	0.000E+00	5.480E+06
I-130	1.730E+06	3.490E+06	3.840E+08	5.220E+06	0.000E+00	1.630E+06	0.000E+00	1.800E+06

APPENDIX I

R_i Child Dose Factors for use in the Gaseous Dose Calculations

Agegroup:	CHILD	Pathway:	Grs/Cow/Milk (CMILK)			Units:	m^2·mrem/yr / µCi/sec; mrem/yr / µCi/m^3 (H-3)	
Nuclide	**Bone**	**Liver**	**Thyroid**	**Kidney**	**Lung**	**Gilli**	**Skin**	**Total Body**
I-131	1.300E+09	1.310E+09	4.330E+11	2.150E+09	0.000E+00	1.170E+08	0.000E+00	7.450E+08
I-132	6.890E-01	1.270E+00	5.870E+01	1.940E+00	0.000E+00	1.490E+00	0.000E+00	5.820E-01
I-133	1.720E+07	2.120E+07	3.940E+09	3.540E+07	0.000E+00	8.560E+06	0.000E+00	8.030E+06
I-134	8.480E-12	1.570E-11	3.620E-10	2.410E-11	0.000E+00	1.040E-11	0.000E+00	7.250E-12
I-135	5.400E+04	9.720E+04	8.610E+06	1.490E+05	0.000E+00	7.400E+04	0.000E+00	4.600E+04
CS-134	2.260E+10	3.720E+10	0.000E+00	1.150E+10	4.130E+09	2.000E+08	0.000E+00	7.840E+09
CS-136	1.010E+09	2.780E+09	0.000E+00	1.480E+09	2.210E+08	9.770E+07	0.000E+00	1.800E+09
CS-137	3.220E+10	3.090E+10	0.000E+00	1.010E+10	3.620E+09	1.930E+08	0.000E+00	4.550E+09
CS-138	3.980E-23	5.530E-23	0.000E+00	3.890E-23	4.190E-24	2.550E-23	0.000E+00	3.510E-23
BA-139	2.010E-07	1.070E-10	0.000E+00	9.360E-11	6.300E-11	1.160E-05	0.000E+00	5.820E-09
BA-140	1.170E+08	1.030E+05	0.000E+00	3.340E+04	6.120E+04	5.930E+07	0.000E+00	6.840E+06
BA-141	1.850E-45	1.040E-48	0.000E+00	8.960E-49	6.090E-48	1.050E-45	0.000E+00	6.020E-47
BA-142	1.150E-79	8.310E-83	0.000E+00	6.720E-83	4.890E-83	1.510E-81	0.000E+00	6.450E-81
LA-140	1.940E+01	6.780E+00	0.000E+00	0.000E+00	0.000E+00	1.890E+05	0.000E+00	2.290E+00
LA-142	8.100E-11	2.580E-11	0.000E+00	0.000E+00	0.000E+00	5.120E-06	0.000E+00	8.090E-12
CE-141	2.190E+04	1.090E+04	0.000E+00	4.780E+03	0.000E+00	1.360E+07	0.000E+00	1.620E+03
CE-143	1.870E+02	1.020E+05	0.000E+00	4.260E+01	0.000E+00	1.490E+06	0.000E+00	1.470E+01
CE-144	1.620E+06	5.090E+05	0.000E+00	2.820E+05	0.000E+00	1.330E+08	0.000E+00	8.660E+04
PR-143	7.180E+02	2.160E+02	0.000E+00	1.170E+02	0.000E+00	7.750E+05	0.000E+00	3.560E+01
PR-144	2.680E-53	8.290E-54	0.000E+00	4.380E-54	0.000E+00	1.780E-50	0.000E+00	1.350E-54
ND-147	4.450E+02	3.600E+02	0.000E+00	1.980E+02	0.000E+00	5.700E+05	0.000E+00	2.790E+01
W-187	2.890E+04	1.710E+04	0.000E+00	0.000E+00	0.000E+00	2.400E+06	0.000E+00	7.670E+03
NP-239	1.720E+01	1.240E+00	0.000E+00	3.580E+00	0.000E+00	9.170E+04	0.000E+00	8.710E-01

APPENDIX I

R_i Child Dose Factors for use in the Gaseous Dose Calculations

Agegroup:	CHILD	Pathway:	Grs/Goat/Milk (GMILK)			Units:	m^2·mrem/yr / µCi/sec; mrem/yr / µCi/m^3 (H-3)	
Nuclide	**Bone**	**Liver**	**Thyroid**	**Kidney**	**Lung**	**Gilli**	**Skin**	**Total Body**
H-3	0.000E+00	3.200E+03	3.200E+03	3.200E+03	3.200E+03	3.200E+03	0.000E+00	3.200E+03
C-14	1.190E+09	2.390E+08	2.390E+08	2.390E+08	2.390E+08	2.390E+08	0.000E+00	2.390E+08
NA-24	1.060E+06	1.060E+06	1.060E+06	1.060E+06	1.060E+06	1.060E+06	0.000E+00	1.060E+06
P-32	9.330E+10	4.370E+09	0.000E+00	0.000E+00	0.000E+00	2.580E+09	0.000E+00	3.600E+09
CR-51	0.000E+00	0.000E+00	6.780E+03	1.850E+03	1.240E+04	6.480E+05	0.000E+00	1.220E+04
MN-54	0.000E+00	2.520E+06	0.000E+00	7.060E+05	0.000E+00	2.110E+06	0.000E+00	6.700E+05
MN-56	0.000E+00	1.520E-03	0.000E+00	1.840E-03	0.000E+00	2.200E-01	0.000E+00	3.430E-04
FE-55	1.450E+06	7.710E+05	0.000E+00	0.000E+00	4.360E+05	1.430E+05	0.000E+00	2.390E+05
FE-59	1.560E+06	2.530E+06	0.000E+00	0.000E+00	7.330E+05	2.630E+06	0.000E+00	1.260E+06
CO-58	0.000E+00	1.450E+06	0.000E+00	0.000E+00	0.000E+00	8.490E+06	0.000E+00	4.450E+06
CO-60	0.000E+00	5.180E+06	0.000E+00	0.000E+00	0.000E+00	2.870E+07	0.000E+00	1.530E+07
NI-63	3.560E+09	1.900E+08	0.000E+00	0.000E+00	0.000E+00	1.280E+07	0.000E+00	1.210E+08
NI-65	1.990E-01	1.870E-02	0.000E+00	0.000E+00	0.000E+00	2.290E+00	0.000E+00	1.090E-02
CU-64	0.000E+00	8.320E+03	0.000E+00	2.010E+04	0.000E+00	3.900E+05	0.000E+00	5.020E+03
ZN-65	4.960E+08	1.320E+09	0.000E+00	8.330E+08	0.000E+00	2.320E+08	0.000E+00	8.220E+08
ZN-69	1.140E-12	1.640E-12	0.000E+00	9.960E-13	0.000E+00	1.030E-10	0.000E+00	1.520E-13
BR-83	0.000E+00	0.000E+00	0.000E+00	0.000E+00	0.000E+00	0.000E+00	0.000E+00	5.280E-02
BR-84	0.000E+00	0.000E+00	0.000E+00	0.000E+00	0.000E+00	0.000E+00	0.000E+00	7.820E-24
BR-85	0.000E+00	0.000E+00	0.000E+00	0.000E+00	0.000E+00	0.000E+00	0.000E+00	0.000E+00
RB-86	0.000E+00	1.050E+09	0.000E+00	0.000E+00	0.000E+00	6.770E+07	0.000E+00	6.470E+08
RB-88	0.000E+00	8.590E-46	0.000E+00	0.000E+00	0.000E+00	4.210E-47	0.000E+00	5.970E-46
RB-89	0.000E+00	1.610E-53	0.000E+00	0.000E+00	0.000E+00	1.410E-55	0.000E+00	1.430E-53
SR-89	1.390E+10	0.000E+00	0.000E+00	0.000E+00	0.000E+00	5.380E+08	0.000E+00	3.970E+08
SR-90	2.350E+11	0.000E+00	0.000E+00	0.000E+00	0.000E+00	3.160E+09	0.000E+00	5.950E+10
SR-91	2.740E+05	0.000E+00	0.000E+00	0.000E+00	0.000E+00	6.040E+05	0.000E+00	1.030E+04

APPENDIX I

R_i Child Dose Factors for use in the Gaseous Dose Calculations

Agegroup:	CHILD	Pathway:	Grs/Goat/Milk (GMILK)			Units:	m^2·mrem/yr / µCi/sec; mrem/yr / µCi/m^3 (H-3)	
Nuclide	**Bone**	**Liver**	**Thyroid**	**Kidney**	**Lung**	**Gilli**	**Skin**	**Total Body**
SR-92	4.580E+00	0.000E+00	0.000E+00	0.000E+00	0.000E+00	8.680E+01	0.000E+00	1.840E-01
Y-90	3.870E+01	0.000E+00	0.000E+00	0.000E+00	0.000E+00	1.100E+05	0.000E+00	1.030E+00
Y-91	4.680E+03	0.000E+00	0.000E+00	0.000E+00	0.000E+00	6.240E+05	0.000E+00	1.250E+02
Y-91M	3.210E-20	0.000E+00	0.000E+00	0.000E+00	0.000E+00	6.280E-17	0.000E+00	1.170E-21
Y-92	3.040E-05	0.000E+00	0.000E+00	0.000E+00	0.000E+00	8.770E-01	0.000E+00	8.690E-07
Y-93	1.210E-01	0.000E+00	0.000E+00	0.000E+00	0.000E+00	1.810E+03	0.000E+00	3.330E-03
ZR-95	4.600E+02	1.010E+02	0.000E+00	1.450E+02	0.000E+00	1.050E+05	0.000E+00	9.000E+01
ZR-97	2.300E-01	3.330E-02	0.000E+00	4.780E-02	0.000E+00	5.040E+03	0.000E+00	1.960E-02
NB-95	3.810E+04	1.490E+04	0.000E+00	1.400E+04	0.000E+00	2.750E+07	0.000E+00	1.060E+04
MO-99	0.000E+00	9.760E+06	0.000E+00	2.090E+07	0.000E+00	8.080E+06	0.000E+00	2.420E+06
TC-99M	1.590E+00	3.110E+00	0.000E+00	4.520E+01	1.580E+00	1.770E+03	0.000E+00	5.150E+01
TC-101	1.400E-60	1.460E-60	0.000E+00	2.490E-59	7.720E-61	4.640E-60	0.000E+00	1.850E-59
RU-103	5.140E+02	0.000E+00	0.000E+00	1.290E+03	0.000E+00	1.330E+04	0.000E+00	1.980E+02
RU-105	4.580E-04	0.000E+00	0.000E+00	4.030E-03	0.000E+00	2.990E-01	0.000E+00	1.660E-04
RU-106	1.110E+04	0.000E+00	0.000E+00	1.500E+04	0.000E+00	1.720E+05	0.000E+00	1.380E+03
AG-110M	2.510E+07	1.690E+07	0.000E+00	3.150E+07	0.000E+00	2.010E+09	0.000E+00	1.350E+07
TE-125M	8.850E+06	2.400E+06	2.480E+06	0.000E+00	0.000E+00	8.540E+06	0.000E+00	1.180E+06
TE-127	3.570E+02	9.630E+01	2.470E+02	1.020E+03	0.000E+00	1.390E+04	0.000E+00	7.660E+01
TE-127M	2.500E+07	6.720E+06	5.970E+06	7.120E+07	0.000E+00	2.020E+07	0.000E+00	2.960E+06
TE-129	1.540E-10	4.300E-11	1.100E-10	4.510E-10	0.000E+00	9.590E-09	0.000E+00	3.660E-11
TE-129M	3.260E+07	9.090E+06	1.050E+07	9.560E+07	0.000E+00	3.970E+07	0.000E+00	5.060E+06
TE-131	1.940E-33	5.910E-34	1.480E-33	5.860E-33	0.000E+00	1.020E-32	0.000E+00	5.770E-34
TE-131M	1.920E+05	6.640E+04	1.360E+05	6.420E+05	0.000E+00	2.690E+06	0.000E+00	7.060E+04
TE-132	1.230E+06	5.440E+05	7.920E+05	5.050E+06	0.000E+00	5.480E+06	0.000E+00	6.570E+05
I-130	2.070E+06	4.190E+06	4.610E+08	6.260E+06	0.000E+00	1.960E+06	0.000E+00	2.160E+06

APPENDIX I

R_i Child Dose Factors for use in the Gaseous Dose Calculations

Agegroup:	CHILD	Pathway:	Grs/Goat/Milk (GMILK)			Units:	m^2·mrem/yr / µCi/sec; mrem/yr / µCi/m^3 (H-3)	
Nuclide	**Bone**	**Liver**	**Thyroid**	**Kidney**	**Lung**	**Gilli**	**Skin**	**Total Body**
I-131	1.560E+09	1.570E+09	5.200E+11	2.580E+09	0.000E+00	1.400E+08	0.000E+00	8.940E+08
I-132	8.270E-01	1.520E+00	7.050E+01	2.330E+00	0.000E+00	1.790E+00	0.000E+00	6.990E-01
I-133	2.060E+07	2.550E+07	4.730E+09	4.250E+07	0.000E+00	1.030E+07	0.000E+00	9.640E+06
I-134	1.020E-11	1.890E-11	4.350E-10	2.890E-11	0.000E+00	1.250E-11	0.000E+00	8.700E-12
I-135	6.480E+04	1.170E+05	1.030E+07	1.790E+05	0.000E+00	8.880E+04	0.000E+00	5.520E+04
CS-134	6.790E+10	1.110E+11	0.000E+00	3.450E+10	1.240E+10	6.010E+08	0.000E+00	2.350E+10
CS-136	3.030E+09	8.340E+09	0.000E+00	4.440E+09	6.630E+08	2.930E+08	0.000E+00	5.400E+09
CS-137	9.670E+10	9.260E+10	0.000E+00	3.020E+10	1.090E+10	5.800E+08	0.000E+00	1.370E+10
CS-138	1.190E-22	1.660E-22	0.000E+00	1.170E-22	1.260E-23	7.640E-23	0.000E+00	1.050E-22
BA-139	2.410E-08	1.290E-11	0.000E+00	1.120E-11	7.560E-12	1.390E-06	0.000E+00	6.980E-10
BA-140	1.410E+07	1.230E+04	0.000E+00	4.010E+03	7.340E+03	7.120E+06	0.000E+00	8.200E+05
BA-141	2.220E-46	1.240E-49	0.000E+00	1.080E-49	7.300E-49	1.270E-46	0.000E+00	7.230E-48
BA-142	1.390E-80	9.970E-84	0.000E+00	8.070E-84	5.870E-84	1.810E-82	0.000E+00	7.740E-82
LA-140	2.330E+00	8.140E-01	0.000E+00	0.000E+00	0.000E+00	2.270E+04	0.000E+00	2.740E-01
LA-142	9.730E-12	3.100E-12	0.000E+00	0.000E+00	0.000E+00	6.140E-07	0.000E+00	9.710E-13
CE-141	2.620E+03	1.310E+03	0.000E+00	5.740E+02	0.000E+00	1.630E+06	0.000E+00	1.940E+02
CE-143	2.250E+01	1.220E+04	0.000E+00	5.120E+00	0.000E+00	1.790E+05	0.000E+00	1.770E+00
CE-144	1.950E+05	6.110E+04	0.000E+00	3.380E+04	0.000E+00	1.590E+07	0.000E+00	1.040E+04
PR-143	8.620E+01	2.590E+01	0.000E+00	1.400E+01	0.000E+00	9.300E+04	0.000E+00	4.280E+00
PR-144	3.220E-54	9.950E-55	0.000E+00	5.260E-55	0.000E+00	2.140E-51	0.000E+00	1.620E-55
ND-147	5.330E+01	4.320E+01	0.000E+00	2.370E+01	0.000E+00	6.850E+04	0.000E+00	3.350E+00
W-187	3.470E+03	2.050E+03	0.000E+00	0.000E+00	0.000E+00	2.880E+05	0.000E+00	9.210E+02
NP-239	2.070E+00	1.490E-01	0.000E+00	4.300E-01	0.000E+00	1.100E+04	0.000E+00	1.040E-01

APPENDIX I

R_i Child Dose Factors for use in the Gaseous Dose Calculations

Agegroup:	CHILD	Pathway:	Grs/Cow/Meat (CMEAT)			Units:	m^2·mrem/yr / µCi/sec; mrem/yr / µCi/m^3 (H-3)	
Nuclide	**Bone**	**Liver**	**Thyroid**	**Kidney**	**Lung**	**Gilli**	**Skin**	**Total Body**
H-3	0.000E+00	2.340E+02	2.340E+02	2.340E+02	2.340E+02	2.340E+02	0.000E+00	2.340E+02
C-14	3.830E+08	7.670E+07	7.670E+07	7.670E+07	7.670E+07	7.670E+07	0.000E+00	7.670E+07
NA-24	1.720E-03	1.720E-03	1.720E-03	1.720E-03	1.720E-03	1.720E-03	0.000E+00	1.720E-03
P-32	7.420E+09	3.470E+08	0.000E+00	0.000E+00	0.000E+00	2.050E+08	0.000E+00	2.860E+08
CR-51	0.000E+00	0.000E+00	4.880E+03	1.330E+03	8.910E+03	4.660E+05	0.000E+00	8.790E+03
MN-54	0.000E+00	8.010E+06	0.000E+00	2.250E+06	0.000E+00	6.720E+06	0.000E+00	2.130E+06
MN-56	0.000E+00	1.430E-53	0.000E+00	1.730E-53	0.000E+00	2.070E-51	0.000E+00	3.230E-54
FE-55	4.570E+08	2.420E+08	0.000E+00	0.000E+00	1.370E+08	4.490E+07	0.000E+00	7.510E+07
FE-59	3.760E+08	6.090E+08	0.000E+00	0.000E+00	1.770E+08	6.340E+08	0.000E+00	3.030E+08
CO-58	0.000E+00	1.640E+07	0.000E+00	0.000E+00	0.000E+00	9.580E+07	0.000E+00	5.020E+07
CO-60	0.000E+00	6.930E+07	0.000E+00	0.000E+00	0.000E+00	3.840E+08	0.000E+00	2.040E+08
NI-63	2.910E+10	1.560E+09	0.000E+00	0.000E+00	0.000E+00	1.050E+08	0.000E+00	9.910E+08
NI-65	3.520E-52	3.310E-53	0.000E+00	0.000E+00	0.000E+00	4.060E-51	0.000E+00	1.930E-53
CU-64	0.000E+00	2.970E-07	0.000E+00	7.180E-07	0.000E+00	1.390E-05	0.000E+00	1.800E-07
ZN-65	3.750E+08	1.000E+09	0.000E+00	6.300E+08	0.000E+00	1.760E+08	0.000E+00	6.220E+08
ZN-69	0.000E+00	0.000E+00	0.000E+00	0.000E+00	0.000E+00	0.000E+00	0.000E+00	0.000E+00
BR-83	0.000E+00	0.000E+00	0.000E+00	0.000E+00	0.000E+00	0.000E+00	0.000E+00	9.520E-57
BR-84	0.000E+00	0.000E+00	0.000E+00	0.000E+00	0.000E+00	0.000E+00	0.000E+00	0.000E+00
BR-85	0.000E+00	0.000E+00	0.000E+00	0.000E+00	0.000E+00	0.000E+00	0.000E+00	0.000E+00
RB-86	0.000E+00	5.770E+08	0.000E+00	0.000E+00	0.000E+00	3.710E+07	0.000E+00	3.550E+08
RB-88	0.000E+00	0.000E+00	0.000E+00	0.000E+00	0.000E+00	0.000E+00	0.000E+00	0.000E+00
RB-89	0.000E+00	0.000E+00	0.000E+00	0.000E+00	0.000E+00	0.000E+00	0.000E+00	0.000E+00
SR-89	4.820E+08	0.000E+00	0.000E+00	0.000E+00	0.000E+00	1.870E+07	0.000E+00	1.380E+07
SR-90	1.040E+10	0.000E+00	0.000E+00	0.000E+00	0.000E+00	1.400E+08	0.000E+00	2.640E+09
SR-91	2.400E-10	0.000E+00	0.000E+00	0.000E+00	0.000E+00	5.300E-10	0.000E+00	9.050E-12

APPENDIX I

R_i Child Dose Factors for use in the Gaseous Dose Calculations

Agegroup:	CHILD	Pathway:	Grs/Cow/Meat (CMEAT)			Units:	m^2·mrem/yr / µCi/sec; mrem/yr / µCi/m^3 (H-3)	
Nuclide	**Bone**	**Liver**	**Thyroid**	**Kidney**	**Lung**	**Gilli**	**Skin**	**Total Body**
SR-92	1.850E-49	0.000E+00	0.000E+00	0.000E+00	0.000E+00	3.490E-48	0.000E+00	7.400E-51
Y-90	1.710E+02	0.000E+00	0.000E+00	0.000E+00	0.000E+00	4.880E+05	0.000E+00	4.590E+00
Y-91	1.800E+06	0.000E+00	0.000E+00	0.000E+00	0.000E+00	2.400E+08	0.000E+00	4.820E+04
Y-91M	0.000E+00	0.000E+00	0.000E+00	0.000E+00	0.000E+00	0.000E+00	0.000E+00	0.000E+00
Y-92	2.410E-39	0.000E+00	0.000E+00	0.000E+00	0.000E+00	6.960E-35	0.000E+00	6.890E-41
Y-93	7.440E-12	0.000E+00	0.000E+00	0.000E+00	0.000E+00	1.110E-07	0.000E+00	2.040E-13
ZR-95	2.660E+06	5.850E+05	0.000E+00	8.380E+05	0.000E+00	6.110E+08	0.000E+00	5.210E+05
ZR-97	3.200E-05	4.630E-06	0.000E+00	6.650E-06	0.000E+00	7.010E-01	0.000E+00	2.730E-06
NB-95	3.100E+06	1.210E+06	0.000E+00	1.130E+06	0.000E+00	2.230E+09	0.000E+00	8.620E+05
MO-99	0.000E+00	1.150E+05	0.000E+00	2.460E+05	0.000E+00	9.510E+04	0.000E+00	2.840E+04
TC-99M	6.190E-21	1.210E-20	0.000E+00	1.760E-19	6.160E-21	6.910E-18	0.000E+00	2.010E-19
TC-101	0.000E+00	0.000E+00	0.000E+00	0.000E+00	0.000E+00	0.000E+00	0.000E+00	0.000E+00
RU-103	1.550E+08	0.000E+00	0.000E+00	3.900E+08	0.000E+00	4.010E+09	0.000E+00	5.960E+07
RU-105	9.020E-28	0.000E+00	0.000E+00	7.930E-27	0.000E+00	5.890E-25	0.000E+00	3.270E-28
RU-106	4.440E+09	0.000E+00	0.000E+00	5.990E+09	0.000E+00	6.900E+10	0.000E+00	5.540E+08
AG-110M	8.390E+06	5.670E+06	0.000E+00	1.060E+07	0.000E+00	6.740E+08	0.000E+00	4.530E+06
TE-125M	5.690E+08	1.540E+08	1.600E+08	0.000E+00	0.000E+00	5.490E+08	0.000E+00	7.590E+07
TE-127	3.380E-10	9.120E-11	2.340E-10	9.630E-10	0.000E+00	1.320E-08	0.000E+00	7.260E-11
TE-127M	1.770E+09	4.780E+08	4.240E+08	5.060E+09	0.000E+00	1.440E+09	0.000E+00	2.110E+08
TE-129	0.000E+00	0.000E+00	0.000E+00	0.000E+00	0.000E+00	0.000E+00	0.000E+00	0.000E+00
TE-129M	1.790E+09	5.000E+08	5.770E+08	5.260E+09	0.000E+00	2.180E+09	0.000E+00	2.780E+08
TE-131	0.000E+00	0.000E+00	0.000E+00	0.000E+00	0.000E+00	0.000E+00	0.000E+00	0.000E+00
TE-131M	7.000E+02	2.420E+02	4.980E+02	2.340E+03	0.000E+00	9.820E+03	0.000E+00	2.580E+02
TE-132	2.120E+06	9.380E+05	1.370E+06	8.710E+06	0.000E+00	9.450E+06	0.000E+00	1.130E+06
I-130	3.030E-06	6.130E-06	6.750E-04	9.160E-06	0.000E+00	2.870E-06	0.000E+00	3.160E-06

APPENDIX I

R_i Child Dose Factors for use in the Gaseous Dose Calculations

Agegroup:	CHILD	Pathway:	Grs/Cow/Meat (CMEAT)			Units:	m^2·mrem/yr / µCi/sec; mrem/yr / µCi/m^3 (H-3)	
Nuclide	**Bone**	**Liver**	**Thyroid**	**Kidney**	**Lung**	**Gilli**	**Skin**	**Total Body**
I-131	1.650E+07	1.660E+07	5.500E+09	2.730E+07	0.000E+00	1.480E+06	0.000E+00	9.460E+06
I-132	1.020E-58	1.880E-58	8.730E-57	2.880E-58	0.000E+00	2.210E-58	0.000E+00	8.650E-59
I-133	5.670E-01	7.020E-01	1.300E+02	1.170E+00	0.000E+00	2.830E-01	0.000E+00	2.660E-01
I-134	0.000E+00	0.000E+00	0.000E+00	0.000E+00	0.000E+00	0.000E+00	0.000E+00	0.000E+00
I-135	6.510E-17	1.170E-16	1.040E-14	1.800E-16	0.000E+00	8.930E-17	0.000E+00	5.550E-17
CS-134	9.220E+08	1.510E+09	0.000E+00	4.690E+08	1.680E+08	8.160E+06	0.000E+00	3.190E+08
CS-136	1.620E+07	4.460E+07	0.000E+00	2.370E+07	3.540E+06	1.570E+06	0.000E+00	2.880E+07
CS-137	1.330E+09	1.280E+09	0.000E+00	4.160E+08	1.500E+08	7.990E+06	0.000E+00	1.880E+08
CS-138	0.000E+00	0.000E+00	0.000E+00	0.000E+00	0.000E+00	0.000E+00	0.000E+00	0.000E+00
BA-139	0.000E+00	0.000E+00	0.000E+00	0.000E+00	0.000E+00	0.000E+00	0.000E+00	0.000E+00
BA-140	4.380E+07	3.840E+04	0.000E+00	1.250E+04	2.290E+04	2.220E+07	0.000E+00	2.560E+06
BA-141	0.000E+00	0.000E+00	0.000E+00	0.000E+00	0.000E+00	0.000E+00	0.000E+00	0.000E+00
BA-142	0.000E+00	0.000E+00	0.000E+00	0.000E+00	0.000E+00	0.000E+00	0.000E+00	0.000E+00
LA-140	5.590E-02	1.950E-02	0.000E+00	0.000E+00	0.000E+00	5.440E+02	0.000E+00	6.580E-03
LA-142	5.300E-92	1.690E-92	0.000E+00	0.000E+00	0.000E+00	3.350E-87	0.000E+00	5.290E-93
CE-141	2.220E+04	1.110E+04	0.000E+00	4.850E+03	0.000E+00	1.380E+07	0.000E+00	1.640E+03
CE-143	3.170E-02	1.720E+01	0.000E+00	7.210E-03	0.000E+00	2.520E+02	0.000E+00	2.490E-03
CE-144	2.320E+06	7.260E+05	0.000E+00	4.020E+05	0.000E+00	1.890E+08	0.000E+00	1.240E+05
PR-143	3.340E+04	1.000E+04	0.000E+00	5.430E+03	0.000E+00	3.600E+07	0.000E+00	1.660E+03
PR-144	0.000E+00	0.000E+00	0.000E+00	0.000E+00	0.000E+00	0.000E+00	0.000E+00	0.000E+00
ND-147	1.170E+04	9.470E+03	0.000E+00	5.190E+03	0.000E+00	1.500E+07	0.000E+00	7.330E+02
W-187	3.210E-02	1.900E-02	0.000E+00	0.000E+00	0.000E+00	2.670E+00	0.000E+00	8.530E-03
NP-239	4.260E-01	3.060E-02	0.000E+00	8.850E-02	0.000E+00	2.260E+03	0.000E+00	2.150E-02

APPENDIX I

R_i Child Dose Factors for use in the Gaseous Dose Calculations

Agegroup:	CHILD	Pathway:	Vegetation (VEG)			Units:	m^2·mrem/yr / µCi/sec; mrem/yr / µCi/m^3 (H-3)	
Nuclide	**Bone**	**Liver**	**Thyroid**	**Kidney**	**Lung**	**Gilli**	**Skin**	**Total Body**
H-3	0.000E+00	4.010E+03	4.010E+03	4.010E+03	4.010E+03	4.010E+03	0.000E+00	4.010E+03
C-14	8.890E+08	1.780E+08	1.780E+08	1.780E+08	1.780E+08	1.780E+08	0.000E+00	1.780E+08
NA-24	3.730E+05	3.730E+05	3.730E+05	3.730E+05	3.730E+05	3.730E+05	0.000E+00	3.730E+05
P-32	3.370E+09	1.580E+08	0.000E+00	0.000E+00	0.000E+00	9.310E+07	0.000E+00	1.300E+08
CR-51	0.000E+00	0.000E+00	6.500E+04	1.780E+04	1.190E+05	6.210E+06	0.000E+00	1.170E+05
MN-54	0.000E+00	6.650E+08	0.000E+00	1.860E+08	0.000E+00	5.580E+08	0.000E+00	1.770E+08
MN-56	0.000E+00	1.860E+01	0.000E+00	2.250E+01	0.000E+00	2.700E+03	0.000E+00	4.200E+00
FE-55	8.010E+08	4.250E+08	0.000E+00	0.000E+00	2.400E+08	7.870E+07	0.000E+00	1.320E+08
FE-59	3.980E+08	6.430E+08	0.000E+00	0.000E+00	1.860E+08	6.700E+08	0.000E+00	3.200E+08
CO-58	0.000E+00	6.440E+07	0.000E+00	0.000E+00	0.000E+00	3.760E+08	0.000E+00	1.970E+08
CO-60	0.000E+00	3.780E+08	0.000E+00	0.000E+00	0.000E+00	2.100E+09	0.000E+00	1.120E+09
NI-63	3.950E+10	2.110E+09	0.000E+00	0.000E+00	0.000E+00	1.420E+08	0.000E+00	1.340E+09
NI-65	1.050E+02	9.890E+00	0.000E+00	0.000E+00	0.000E+00	1.210E+03	0.000E+00	5.770E+00
CU-64	0.000E+00	1.100E+04	0.000E+00	2.660E+04	0.000E+00	5.160E+05	0.000E+00	6.640E+03
ZN-65	8.130E+08	2.160E+09	0.000E+00	1.360E+09	0.000E+00	3.800E+08	0.000E+00	1.350E+09
ZN-69	9.490E-06	1.370E-05	0.000E+00	8.320E-06	0.000E+00	8.640E-04	0.000E+00	1.270E-06
BR-83	0.000E+00	0.000E+00	0.000E+00	0.000E+00	0.000E+00	0.000E+00	0.000E+00	5.370E+00
BR-84	0.000E+00	0.000E+00	0.000E+00	0.000E+00	0.000E+00	0.000E+00	0.000E+00	3.820E-11
BR-85	0.000E+00	0.000E+00	0.000E+00	0.000E+00	0.000E+00	0.000E+00	0.000E+00	0.000E+00
RB-86	0.000E+00	4.520E+08	0.000E+00	0.000E+00	0.000E+00	2.910E+07	0.000E+00	2.780E+08
RB-88	0.000E+00	4.380E-22	0.000E+00	0.000E+00	0.000E+00	2.150E-23	0.000E+00	3.040E-22
RB-89	0.000E+00	4.610E-26	0.000E+00	0.000E+00	0.000E+00	4.020E-28	0.000E+00	4.090E-26
SR-89	3.600E+10	0.000E+00	0.000E+00	0.000E+00	0.000E+00	1.390E+09	0.000E+00	1.030E+09
SR-90	1.240E+12	0.000E+00	0.000E+00	0.000E+00	0.000E+00	1.670E+10	0.000E+00	3.150E+11
SR-91	5.240E+05	0.000E+00	0.000E+00	0.000E+00	0.000E+00	1.160E+06	0.000E+00	1.980E+04

APPENDIX I

R_i Child Dose Factors for use in the Gaseous Dose Calculations

Agegroup:	CHILD	Pathway:	Vegetation (VEG)			Units:	m^2·mrem/yr / µCi/sec; mrem/yr / µCi/m^3 (H-3)	
Nuclide	**Bone**	**Liver**	**Thyroid**	**Kidney**	**Lung**	**Gilli**	**Skin**	**Total Body**
SR-92	7.280E+02	0.000E+00	0.000E+00	0.000E+00	0.000E+00	1.380E+04	0.000E+00	2.920E+01
Y-90	2.310E+04	0.000E+00	0.000E+00	0.000E+00	0.000E+00	6.570E+07	0.000E+00	6.180E+02
Y-91	1.860E+07	0.000E+00	0.000E+00	0.000E+00	0.000E+00	2.480E+09	0.000E+00	4.990E+05
Y-91M	8.910E-09	0.000E+00	0.000E+00	0.000E+00	0.000E+00	1.740E-05	0.000E+00	3.240E-10
Y-92	1.580E+00	0.000E+00	0.000E+00	0.000E+00	0.000E+00	4.580E+04	0.000E+00	4.530E-02
Y-93	2.930E+02	0.000E+00	0.000E+00	0.000E+00	0.000E+00	4.370E+06	0.000E+00	8.040E+00
ZR-95	3.860E+06	8.480E+05	0.000E+00	1.210E+06	0.000E+00	8.850E+08	0.000E+00	7.550E+05
ZR-97	5.700E+02	8.240E+01	0.000E+00	1.180E+02	0.000E+00	1.250E+07	0.000E+00	4.860E+01
NB-95	4.110E+05	1.600E+05	0.000E+00	1.500E+05	0.000E+00	2.960E+08	0.000E+00	1.140E+05
MO-99	0.000E+00	7.710E+06	0.000E+00	1.650E+07	0.000E+00	6.380E+06	0.000E+00	1.910E+06
TC-99M	4.710E+00	9.230E+00	0.000E+00	1.340E+02	4.690E+00	5.260E+03	0.000E+00	1.530E+02
TC-101	1.410E-30	1.470E-30	0.000E+00	2.510E-29	7.780E-31	4.680E-30	0.000E+00	1.870E-29
RU-103	1.530E+07	0.000E+00	0.000E+00	3.860E+07	0.000E+00	3.970E+08	0.000E+00	5.900E+06
RU-105	9.160E+01	0.000E+00	0.000E+00	8.050E+02	0.000E+00	5.980E+04	0.000E+00	3.320E+01
RU-106	7.450E+08	0.000E+00	0.000E+00	1.010E+09	0.000E+00	1.160E+10	0.000E+00	9.300E+07
AG-110M	3.210E+07	2.170E+07	0.000E+00	4.040E+07	0.000E+00	2.580E+09	0.000E+00	1.730E+07
TE-125M	3.510E+08	9.500E+07	9.840E+07	0.000E+00	0.000E+00	3.380E+08	0.000E+00	4.670E+07
TE-127	9.850E+03	2.650E+03	6.810E+03	2.800E+04	0.000E+00	3.850E+05	0.000E+00	2.110E+03
TE-127M	1.320E+09	3.560E+08	3.160E+08	3.770E+09	0.000E+00	1.070E+09	0.000E+00	1.570E+08
TE-129	1.320E-03	3.690E-04	9.430E-04	3.870E-03	0.000E+00	8.230E-02	0.000E+00	3.140E-04
TE-129M	8.410E+08	2.350E+08	2.710E+08	2.470E+09	0.000E+00	1.030E+09	0.000E+00	1.310E+08
TE-131	2.570E-15	7.830E-16	1.960E-15	7.770E-15	0.000E+00	1.350E-14	0.000E+00	7.640E-16
TE-131M	1.540E+06	5.330E+05	1.100E+06	5.160E+06	0.000E+00	2.160E+07	0.000E+00	5.680E+05
TE-132	7.000E+06	3.100E+06	4.510E+06	2.880E+07	0.000E+00	3.120E+07	0.000E+00	3.740E+06
I-130	6.160E+05	1.240E+06	1.370E+08	1.860E+06	0.000E+00	5.820E+05	0.000E+00	6.410E+05

APPENDIX I

R_i Child Dose Factors for use in the Gaseous Dose Calculations

Agegroup:	CHILD	Pathway:	Vegetation (VEG)			Units:	m^2·mrem/yr / µCi/sec; mrem/yr / µCi/m^3 (H-3)	
Nuclide	**Bone**	**Liver**	**Thyroid**	**Kidney**	**Lung**	**Gilli**	**Skin**	**Total Body**
I-131	1.430E+08	1.440E+08	4.750E+10	2.360E+08	0.000E+00	1.280E+07	0.000E+00	8.170E+07
I-132	9.220E+01	1.690E+02	7.860E+03	2.590E+02	0.000E+00	1.990E+02	0.000E+00	7.790E+01
I-133	3.530E+06	4.370E+06	8.110E+08	7.280E+06	0.000E+00	1.760E+06	0.000E+00	1.650E+06
I-134	1.550E-04	2.880E-04	6.620E-03	4.400E-04	0.000E+00	1.910E-04	0.000E+00	1.320E-04
I-135	6.260E+04	1.130E+05	9.970E+06	1.730E+05	0.000E+00	8.580E+04	0.000E+00	5.330E+04
CS-134	1.600E+10	2.630E+10	0.000E+00	8.150E+09	2.930E+09	1.420E+08	0.000E+00	5.550E+09
CS-136	8.240E+07	2.270E+08	0.000E+00	1.210E+08	1.800E+07	7.960E+06	0.000E+00	1.470E+08
CS-137	2.390E+10	2.290E+10	0.000E+00	7.460E+09	2.680E+09	1.430E+08	0.000E+00	3.380E+09
CS-138	6.570E-11	9.130E-11	0.000E+00	6.430E-11	6.920E-12	4.210E-11	0.000E+00	5.790E-11
BA-139	4.950E-02	2.640E-05	0.000E+00	2.310E-05	1.560E-05	2.860E+00	0.000E+00	1.440E-03
BA-140	2.770E+08	2.420E+05	0.000E+00	7.890E+04	1.450E+05	1.400E+08	0.000E+00	1.610E+07
BA-141	1.990E-21	1.110E-24	0.000E+00	9.620E-25	6.530E-24	1.130E-21	0.000E+00	6.460E-23
BA-142	9.930E-39	7.150E-42	0.000E+00	5.780E-42	4.200E-42	1.300E-40	0.000E+00	5.540E-40
LA-140	3.250E+03	1.130E+03	0.000E+00	0.000E+00	0.000E+00	3.160E+07	0.000E+00	3.820E+02
LA-142	3.360E-04	1.070E-04	0.000E+00	0.000E+00	0.000E+00	2.120E+01	0.000E+00	3.350E-05
CE-141	6.560E+05	3.270E+05	0.000E+00	1.430E+05	0.000E+00	4.080E+08	0.000E+00	4.860E+04
CE-143	1.720E+03	9.310E+05	0.000E+00	3.910E+02	0.000E+00	1.360E+07	0.000E+00	1.350E+02
CE-144	1.270E+08	3.980E+07	0.000E+00	2.210E+07	0.000E+00	1.040E+10	0.000E+00	6.780E+06
PR-143	1.460E+05	4.370E+04	0.000E+00	2.370E+04	0.000E+00	1.570E+08	0.000E+00	7.230E+03
PR-144	5.380E-26	1.660E-26	0.000E+00	8.800E-27	0.000E+00	3.580E-23	0.000E+00	2.710E-27
ND-147	7.150E+04	5.790E+04	0.000E+00	3.180E+04	0.000E+00	9.170E+07	0.000E+00	4.480E+03
W-187	6.430E+04	3.810E+04	0.000E+00	0.000E+00	0.000E+00	5.350E+06	0.000E+00	1.710E+04
NP-239	2.560E+03	1.840E+02	0.000E+00	5.310E+02	0.000E+00	1.360E+07	0.000E+00	1.290E+02

APPENDIX I

R_i Child Dose Factors for use in the Gaseous Dose Calculations

Agegroup:	CHILD	Pathway:	Inhalation (INHL)			Units:	mrem/yr / µCi/m^3	
Nuclide	**Bone**	**Liver**	**Thyroid**	**Kidney**	**Lung**	**Gilli**	**Skin**	**Total Body**
H-3	0.000E+00	1.120E+03	1.120E+03	1.120E+03	1.120E+03	1.120E+03	0.000E+00	1.120E+03
C-14	3.590E+04	6.730E+03	6.730E+03	6.730E+03	6.730E+03	6.730E+03	0.000E+00	6.730E+03
NA-24	1.610E+04	1.610E+04	1.610E+04	1.610E+04	1.610E+04	1.610E+04	0.000E+00	1.610E+04
P-32	2.600E+06	1.140E+05	0.000E+00	0.000E+00	0.000E+00	4.220E+04	0.000E+00	9.880E+04
CR-51	0.000E+00	0.000E+00	8.550E+01	2.430E+01	1.700E+04	1.080E+03	0.000E+00	1.540E+02
MN-54	0.000E+00	4.290E+04	0.000E+00	1.000E+04	1.580E+06	2.290E+04	0.000E+00	9.510E+03
MN-56	0.000E+00	1.660E+00	0.000E+00	1.670E+00	1.310E+04	1.230E+05	0.000E+00	3.120E-01
FE-55	4.740E+04	2.520E+04	0.000E+00	0.000E+00	1.110E+05	2.870E+03	0.000E+00	7.770E+03
FE-59	2.070E+04	3.340E+04	0.000E+00	0.000E+00	1.270E+06	7.070E+04	0.000E+00	1.670E+04
CO-58	0.000E+00	1.770E+03	0.000E+00	0.000E+00	1.110E+06	3.440E+04	0.000E+00	3.160E+03
CO-60	0.000E+00	1.310E+04	0.000E+00	0.000E+00	7.070E+06	9.620E+04	0.000E+00	2.260E+04
NI-63	8.210E+05	4.620E+04	0.000E+00	0.000E+00	2.750E+05	6.330E+03	0.000E+00	2.800E+04
NI-65	2.990E+00	2.960E-01	0.000E+00	0.000E+00	8.180E+03	8.400E+04	0.000E+00	1.640E-01
CU-64	0.000E+00	1.990E+00	0.000E+00	6.030E+00	9.580E+03	3.670E+04	0.000E+00	1.070E+00
ZN-65	4.260E+04	1.130E+05	0.000E+00	7.140E+04	9.950E+05	1.630E+04	0.000E+00	7.030E+04
ZN-69	6.700E-02	9.660E-02	0.000E+00	5.850E-02	1.420E+03	1.020E+04	0.000E+00	8.920E-03
BR-83	0.000E+00	0.000E+00	0.000E+00	0.000E+00	0.000E+00	0.000E+00	0.000E+00	4.740E+02
BR-84	0.000E+00	0.000E+00	0.000E+00	0.000E+00	0.000E+00	0.000E+00	0.000E+00	5.480E+02
BR-85	0.000E+00	0.000E+00	0.000E+00	0.000E+00	0.000E+00	0.000E+00	0.000E+00	2.530E+01
RB-86	0.000E+00	1.980E+05	0.000E+00	0.000E+00	0.000E+00	7.990E+03	0.000E+00	1.140E+05
RB-88	0.000E+00	5.620E+02	0.000E+00	0.000E+00	0.000E+00	1.720E+01	0.000E+00	3.660E+02
RB-89	0.000E+00	3.450E+02	0.000E+00	0.000E+00	0.000E+00	1.890E+00	0.000E+00	2.900E+02
SR-89	5.990E+05	0.000E+00	0.000E+00	0.000E+00	2.160E+06	1.670E+05	0.000E+00	1.720E+04
SR-90	1.010E+08	0.000E+00	0.000E+00	0.000E+00	1.480E+07	3.430E+05	0.000E+00	6.440E+06
SR-91	1.210E+02	0.000E+00	0.000E+00	0.000E+00	5.330E+04	1.740E+05	0.000E+00	4.590E+00

APPENDIX I

R_i Child Dose Factors for use in the Gaseous Dose Calculations

Agegroup:	CHILD	Pathway:	Inhalation (INHL)			Units:	mrem/yr / µCi/m^3	
Nuclide	**Bone**	**Liver**	**Thyroid**	**Kidney**	**Lung**	**Gilli**	**Skin**	**Total Body**
SR-92	1.310E+01	0.000E+00	0.000E+00	0.000E+00	2.400E+04	2.420E+05	0.000E+00	5.250E-01
Y-90	4.110E+03	0.000E+00	0.000E+00	0.000E+00	2.620E+05	2.680E+05	0.000E+00	1.110E+02
Y-91	9.140E+05	0.000E+00	0.000E+00	0.000E+00	2.630E+06	1.840E+05	0.000E+00	2.440E+04
Y-91M	5.070E-01	0.000E+00	0.000E+00	0.000E+00	2.810E+03	1.720E+03	0.000E+00	1.840E-02
Y-92	2.030E+01	0.000E+00	0.000E+00	0.000E+00	2.390E+04	2.390E+05	0.000E+00	5.810E-01
Y-93	1.860E+02	0.000E+00	0.000E+00	0.000E+00	7.440E+04	3.880E+05	0.000E+00	5.110E+00
ZR-95	1.900E+05	4.180E+04	0.000E+00	5.960E+04	2.230E+06	6.110E+04	0.000E+00	3.700E+04
ZR-97	1.880E+02	2.720E+01	0.000E+00	3.880E+01	1.130E+05	3.510E+05	0.000E+00	1.600E+01
NB-95	2.350E+04	9.180E+03	0.000E+00	8.620E+03	6.140E+05	3.700E+04	0.000E+00	6.550E+03
MO-99	0.000E+00	1.720E+02	0.000E+00	3.920E+02	1.350E+05	1.270E+05	0.000E+00	4.260E+01
TC-99M	1.780E-03	3.480E-03	0.000E+00	5.070E-02	9.510E+02	4.810E+03	0.000E+00	5.770E-02
TC-101	8.100E-05	8.510E-05	0.000E+00	1.450E-03	5.850E+02	1.630E+01	0.000E+00	1.080E-03
RU-103	2.790E+03	0.000E+00	0.000E+00	7.030E+03	6.620E+05	4.480E+04	0.000E+00	1.070E+03
RU-105	1.530E+00	0.000E+00	0.000E+00	1.340E+00	1.590E+04	9.950E+04	0.000E+00	5.550E-01
RU-106	1.360E+05	0.000E+00	0.000E+00	1.840E+05	1.430E+07	4.290E+05	0.000E+00	1.690E+04
AG-110M	1.690E+04	1.140E+04	0.000E+00	2.120E+04	5.480E+06	1.000E+05	0.000E+00	9.140E+03
TE-125M	6.730E+03	2.330E+03	1.920E+03	0.000E+00	4.770E+05	3.380E+04	0.000E+00	9.140E+02
TE-127	2.770E+00	9.510E-01	1.960E+00	7.070E+00	1.000E+04	5.620E+04	0.000E+00	6.100E-01
TE-127M	2.490E+04	8.550E+03	6.070E+03	6.360E+04	1.480E+06	7.140E+04	0.000E+00	3.020E+03
TE-129	9.770E-02	3.500E-02	7.140E-02	2.570E-01	2.930E+03	2.550E+04	0.000E+00	2.380E-02
TE-129M	1.920E+04	6.840E+03	6.330E+03	5.030E+04	1.760E+06	1.820E+05	0.000E+00	3.040E+03
TE-131	2.170E-02	8.440E-03	1.700E-02	5.880E-02	2.050E+03	1.330E+03	0.000E+00	6.590E-03
TE-131M	1.340E+02	5.920E+01	9.770E+01	4.000E+02	2.060E+05	3.080E+05	0.000E+00	5.070E+01
TE-132	4.810E+02	2.720E+02	3.170E+02	1.770E+03	3.770E+05	1.380E+05	0.000E+00	2.630E+02
I-130	8.180E+03	1.640E+04	1.850E+06	2.450E+04	0.000E+00	5.110E+03	0.000E+00	8.440E+03

APPENDIX I

R_i Child Dose Factors for use in the Gaseous Dose Calculations

Agegroup:	CHILD	Pathway:	Inhalation (INHL)			Units:	mrem/yr / µCi/m^3	
Nuclide	**Bone**	**Liver**	**Thyroid**	**Kidney**	**Lung**	**Gilli**	**Skin**	**Total Body**
I-131	4.810E+04	4.810E+04	1.620E+07	7.880E+04	0.000E+00	2.840E+03	0.000E+00	2.730E+04
I-132	2.120E+03	4.070E+03	1.940E+05	6.250E+03	0.000E+00	3.200E+03	0.000E+00	1.880E+03
I-133	1.660E+04	2.030E+04	3.850E+06	3.380E+04	0.000E+00	5.480E+03	0.000E+00	7.700E+03
I-134	1.170E+03	2.160E+03	5.070E+04	3.300E+03	0.000E+00	9.550E+02	0.000E+00	9.950E+02
I-135	4.920E+03	8.730E+03	7.920E+05	1.340E+04	0.000E+00	4.440E+03	0.000E+00	4.140E+03
CS-134	6.510E+05	1.010E+06	0.000E+00	3.300E+05	1.210E+05	3.850E+03	0.000E+00	2.250E+05
CS-136	6.510E+04	1.710E+05	0.000E+00	9.550E+04	1.450E+04	4.180E+03	0.000E+00	1.160E+05
CS-137	9.060E+05	8.250E+05	0.000E+00	2.820E+05	1.040E+05	3.620E+03	0.000E+00	1.280E+05
CS-138	6.330E+02	8.400E+02	0.000E+00	6.220E+02	6.810E+01	2.700E+02	0.000E+00	5.550E+02
BA-139	1.840E+00	9.840E-04	0.000E+00	8.620E-04	5.770E+03	5.770E+04	0.000E+00	5.360E-02
BA-140	7.400E+04	6.480E+01	0.000E+00	2.110E+01	1.740E+06	1.020E+05	0.000E+00	4.330E+03
BA-141	1.960E-01	1.090E-04	0.000E+00	9.470E-05	2.920E+03	2.750E+02	0.000E+00	6.360E-03
BA-142	5.000E-02	3.600E-05	0.000E+00	2.910E-05	1.640E+03	2.740E+00	0.000E+00	2.790E-03
LA-140	6.440E+02	2.250E+02	0.000E+00	0.000E+00	1.830E+05	2.260E+05	0.000E+00	7.550E+01
LA-142	1.300E+00	4.110E-01	0.000E+00	0.000E+00	8.700E+03	7.580E+04	0.000E+00	1.290E-01
CE-141	3.920E+04	1.950E+04	0.000E+00	8.550E+03	5.440E+05	5.660E+04	0.000E+00	2.900E+03
CE-143	3.660E+02	1.990E+02	0.000E+00	8.360E+01	1.150E+05	1.270E+05	0.000E+00	2.870E+01
CE-144	6.770E+06	2.120E+06	0.000E+00	1.170E+06	1.200E+07	3.880E+05	0.000E+00	3.610E+05
PR-143	1.850E+04	5.550E+03	0.000E+00	3.000E+03	4.330E+05	9.730E+04	0.000E+00	9.140E+02
PR-144	5.960E-02	1.850E-02	0.000E+00	9.770E-03	1.570E+03	1.970E+02	0.000E+00	3.000E-03
ND-147	1.080E+04	8.730E+03	0.000E+00	4.810E+03	3.280E+05	8.210E+04	0.000E+00	6.810E+02
W-187	1.630E+01	9.660E+00	0.000E+00	0.000E+00	4.110E+04	9.100E+04	0.000E+00	4.330E+00
NP-239	4.660E+02	3.340E+01	0.000E+00	9.730E+01	5.810E+04	6.400E+04	0.000E+00	2.350E+01

APPENDIX I

R_i Child Dose Factors for use in the Gaseous Dose Calculations

Agegroup:	CHILD	Pathway:	Ground Plane Deposition (GPD)			Units:	m^2·mrem/yr / µCi/sec	
Nuclide	**Bone**	**Liver**	**Thyroid**	**Kidney**	**Lung**	**Gilli**	**Skin**	**Total Body**
H-3	0.000E+00	0.000E+00	0.000E+00	0.000E+00	0.000E+00	0.000E+00	0.000E+00	0.000E+00
C-14	0.000E+00	0.000E+00	0.000E+00	0.000E+00	0.000E+00	0.000E+00	0.000E+00	0.000E+00
NA-24	1.190E+07	1.190E+07	1.190E+07	1.190E+07	1.190E+07	1.190E+07	1.390E+07	1.190E+07
P-32	0.000E+00	0.000E+00	0.000E+00	0.000E+00	0.000E+00	0.000E+00	0.000E+00	0.000E+00
CR-51	4.660E+06	4.660E+06	4.660E+06	4.660E+06	4.660E+06	4.660E+06	5.510E+06	4.660E+06
MN-54	1.390E+09	1.390E+09	1.390E+09	1.390E+09	1.390E+09	1.390E+09	1.630E+09	1.390E+09
MN-56	9.020E+05	9.020E+05	9.020E+05	9.020E+05	9.020E+05	9.020E+05	1.070E+06	9.020E+05
FE-55	0.000E+00	0.000E+00	0.000E+00	0.000E+00	0.000E+00	0.000E+00	0.000E+00	0.000E+00
FE-59	2.730E+08	2.730E+08	2.730E+08	2.730E+08	2.730E+08	2.730E+08	3.210E+08	2.730E+08
CO-58	3.790E+08	3.790E+08	3.790E+08	3.790E+08	3.790E+08	3.790E+08	4.440E+08	3.790E+08
CO-60	2.150E+10	2.150E+10	2.150E+10	2.150E+10	2.150E+10	2.150E+10	2.530E+10	2.150E+10
NI-63	0.000E+00	0.000E+00	0.000E+00	0.000E+00	0.000E+00	0.000E+00	0.000E+00	0.000E+00
NI-65	2.970E+05	2.970E+05	2.970E+05	2.970E+05	2.970E+05	2.970E+05	3.450E+05	2.970E+05
CU-64	6.070E+05	6.070E+05	6.070E+05	6.070E+05	6.070E+05	6.070E+05	6.880E+05	6.070E+05
ZN-65	7.470E+08	7.470E+08	7.470E+08	7.470E+08	7.470E+08	7.470E+08	8.590E+08	7.470E+08
ZN-69	0.000E+00	0.000E+00	0.000E+00	0.000E+00	0.000E+00	0.000E+00	0.000E+00	0.000E+00
BR-83	4.870E+03	4.870E+03	4.870E+03	4.870E+03	4.870E+03	4.870E+03	7.080E+03	4.870E+03
BR-84	2.030E+05	2.030E+05	2.030E+05	2.030E+05	2.030E+05	2.030E+05	2.360E+05	2.030E+05
BR-85	0.000E+00	0.000E+00	0.000E+00	0.000E+00	0.000E+00	0.000E+00	0.000E+00	0.000E+00
RB-86	8.990E+06	8.990E+06	8.990E+06	8.990E+06	8.990E+06	8.990E+06	1.030E+07	8.990E+06
RB-88	3.310E+04	3.310E+04	3.310E+04	3.310E+04	3.310E+04	3.310E+04	3.780E+04	3.310E+04
RB-89	1.230E+05	1.230E+05	1.230E+05	1.230E+05	1.230E+05	1.230E+05	1.480E+05	1.230E+05
SR-89	2.160E+04	2.160E+04	2.160E+04	2.160E+04	2.160E+04	2.160E+04	2.510E+04	2.160E+04
SR-90	0.000E+00	0.000E+00	0.000E+00	0.000E+00	0.000E+00	0.000E+00	0.000E+00	0.000E+00
SR-91	2.150E+06	2.150E+06	2.150E+06	2.150E+06	2.150E+06	2.150E+06	2.510E+06	2.150E+06

APPENDIX I

R_i Child Dose Factors for use in the Gaseous Dose Calculations

Agegroup:	CHILD	Pathway:	Ground Plane Deposition (GPD)			Units:	m^2·mrem/yr / µCi/sec	
Nuclide	**Bone**	**Liver**	**Thyroid**	**Kidney**	**Lung**	**Gilli**	**Skin**	**Total Body**
SR-92	7.770E+05	7.770E+05	7.770E+05	7.770E+05	7.770E+05	7.770E+05	8.630E+05	7.770E+05
Y-90	4.490E+03	4.490E+03	4.490E+03	4.490E+03	4.490E+03	4.490E+03	5.310E+03	4.490E+03
Y-91	1.070E+06	1.070E+06	1.070E+06	1.070E+06	1.070E+06	1.070E+06	1.210E+06	1.070E+06
Y-91M	1.000E+05	1.000E+05	1.000E+05	1.000E+05	1.000E+05	1.000E+05	1.160E+05	1.000E+05
Y-92	1.800E+05	1.800E+05	1.800E+05	1.800E+05	1.800E+05	1.800E+05	2.140E+05	1.800E+05
Y-93	1.830E+05	1.830E+05	1.830E+05	1.830E+05	1.830E+05	1.830E+05	2.510E+05	1.830E+05
ZR-95	2.450E+08	2.450E+08	2.450E+08	2.450E+08	2.450E+08	2.450E+08	2.840E+08	2.450E+08
ZR-97	2.960E+06	2.960E+06	2.960E+06	2.960E+06	2.960E+06	2.960E+06	3.440E+06	2.960E+06
NB-95	1.370E+08	1.370E+08	1.370E+08	1.370E+08	1.370E+08	1.370E+08	1.610E+08	1.370E+08
MO-99	3.990E+06	3.990E+06	3.990E+06	3.990E+06	3.990E+06	3.990E+06	4.630E+06	3.990E+06
TC-99M	1.840E+05	1.840E+05	1.840E+05	1.840E+05	1.840E+05	1.840E+05	2.110E+05	1.840E+05
TC-101	2.040E+04	2.040E+04	2.040E+04	2.040E+04	2.040E+04	2.040E+04	2.260E+04	2.040E+04
RU-103	1.080E+08	1.080E+08	1.080E+08	1.080E+08	1.080E+08	1.080E+08	1.260E+08	1.080E+08
RU-105	6.360E+05	6.360E+05	6.360E+05	6.360E+05	6.360E+05	6.360E+05	7.210E+05	6.360E+05
RU-106	4.220E+08	4.220E+08	4.220E+08	4.220E+08	4.220E+08	4.220E+08	5.070E+08	4.220E+08
AG-110M	3.440E+09	3.440E+09	3.440E+09	3.440E+09	3.440E+09	3.440E+09	4.010E+09	3.440E+09
TE-125M	1.550E+06	1.550E+06	1.550E+06	1.550E+06	1.550E+06	1.550E+06	2.130E+06	1.550E+06
TE-127	2.980E+03	2.980E+03	2.980E+03	2.980E+03	2.980E+03	2.980E+03	3.280E+03	2.980E+03
TE-127M	9.160E+04	9.160E+04	9.160E+04	9.160E+04	9.160E+04	9.160E+04	1.080E+05	9.160E+04
TE-129	2.620E+04	2.620E+04	2.620E+04	2.620E+04	2.620E+04	2.620E+04	3.100E+04	2.620E+04
TE-129M	1.980E+07	1.980E+07	1.980E+07	1.980E+07	1.980E+07	1.980E+07	2.310E+07	1.980E+07
TE-131	2.920E+04	2.920E+04	2.920E+04	2.920E+04	2.920E+04	2.920E+04	3.450E+07	2.920E+04
TE-131M	8.030E+06	8.030E+06	8.030E+06	8.030E+06	8.030E+06	8.030E+06	9.460E+06	8.030E+06
TE-132	4.230E+06	4.230E+06	4.230E+06	4.230E+06	4.230E+06	4.230E+06	4.980E+06	4.230E+06
I-130	5.510E+06	5.510E+06	5.510E+06	5.510E+06	5.510E+06	5.510E+06	6.690E+06	5.510E+06

APPENDIX I

R_i Child Dose Factors for use in the Gaseous Dose Calculations

Agegroup:	CHILD	Pathway:	Ground Plane Deposition (GPD)			Units:	m^2·mrem/yr / µCi/sec	
Nuclide	**Bone**	**Liver**	**Thyroid**	**Kidney**	**Lung**	**Gilli**	**Skin**	**Total Body**
I-131	1.720E+07	1.720E+07	1.720E+07	1.720E+07	1.720E+07	1.720E+07	2.090E+07	1.720E+07
I-132	1.250E+06	1.250E+06	1.250E+06	1.250E+06	1.250E+06	1.250E+06	1.470E+06	1.250E+06
I-133	2.450E+06	2.450E+06	2.450E+06	2.450E+06	2.450E+06	2.450E+06	2.980E+06	2.450E+06
I-134	4.470E+05	4.470E+05	4.470E+05	4.470E+05	4.470E+05	4.470E+05	5.300E+05	4.470E+05
I-135	2.530E+06	2.530E+06	2.530E+06	2.530E+06	2.530E+06	2.530E+06	2.950E+06	2.530E+06
CS-134	6.860E+09	6.860E+09	6.860E+09	6.860E+09	6.860E+09	6.860E+09	8.000E+09	6.860E+09
CS-136	1.510E+08	1.510E+08	1.510E+08	1.510E+08	1.510E+08	1.510E+08	1.710E+08	1.510E+08
CS-137	1.030E+10	1.030E+10	1.030E+10	1.030E+10	1.030E+10	1.030E+10	1.200E+10	1.030E+10
CS-138	3.590E+05	3.590E+05	3.590E+05	3.590E+05	3.590E+05	3.590E+05	4.100E+05	3.590E+05
BA-139	1.060E+05	1.060E+05	1.060E+05	1.060E+05	1.060E+05	1.060E+05	1.190E+05	1.060E+05
BA-140	2.050E+07	2.050E+07	2.050E+07	2.050E+07	2.050E+07	2.050E+07	2.350E+07	2.050E+07
BA-141	4.170E+04	4.170E+04	4.170E+04	4.170E+04	4.170E+04	4.170E+04	4.750E+04	4.170E+04
BA-142	4.490E+04	4.490E+04	4.490E+04	4.490E+04	4.490E+04	4.490E+04	5.110E+04	4.490E+04
LA-140	1.920E+07	1.920E+07	1.920E+07	1.920E+07	1.920E+07	1.920E+07	2.180E+07	1.920E+07
LA-142	7.600E+05	7.600E+05	7.600E+05	7.600E+05	7.600E+05	7.600E+05	9.120E+05	7.600E+05
CE-141	1.370E+07	1.370E+07	1.370E+07	1.370E+07	1.370E+07	1.370E+07	1.540E+07	1.370E+07
CE-143	2.310E+06	2.310E+06	2.310E+06	2.310E+06	2.310E+06	2.310E+06	2.630E+06	2.310E+06
CE-144	6.950E+07	6.950E+07	6.950E+07	6.950E+07	6.950E+07	6.950E+07	8.040E+07	6.950E+07
PR-143	0.000E+00	0.000E+00	0.000E+00	0.000E+00	0.000E+00	0.000E+00	0.000E+00	0.000E+00
PR-144	1.830E+03	1.830E+03	1.830E+03	1.830E+03	1.830E+03	1.830E+03	2.110E+03	1.830E+03
ND-147	8.390E+06	8.390E+06	8.390E+06	8.390E+06	8.390E+06	8.390E+06	1.010E+07	8.390E+06
W-187	2.350E+06	2.350E+06	2.350E+06	2.350E+06	2.350E+06	2.350E+06	2.730E+06	2.350E+06
NP-239	1.710E+06	1.710E+06	1.710E+06	1.710E+06	1.710E+06	1.710E+06	1.980E+06	1.710E+06

APPENDIX J

R_i Infant Dose Factors for use in the Gaseous Dose Calculations

Agegroup:	INFANT	Pathway:	Grs/Cow/Milk (CMILK)			Units:	m^2·mrem/yr / µCi/sec; mrem/yr / µCi/m^3 (H-3)	
Nuclide	**Bone**	**Liver**	**Thyroid**	**Kidney**	**Lung**	**Gilli**	**Skin**	**Total Body**
H-3	0.000E+00	2.380E+03	2.380E+03	2.380E+03	2.380E+03	2.380E+03	0.000E+00	2.380E+03
C-14	2.340E+09	5.000E+08	5.000E+08	5.000E+08	5.000E+08	5.000E+08	0.000E+00	5.000E+08
NA-24	1.540E+07	1.540E+07	1.540E+07	1.540E+07	1.540E+07	1.540E+07	0.000E+00	1.540E+07
P-32	1.600E+11	9.430E+09	0.000E+00	0.000E+00	0.000E+00	2.170E+09	0.000E+00	6.210E+09
CR-51	0.000E+00	0.000E+00	1.050E+05	2.300E+04	2.050E+05	4.700E+06	0.000E+00	1.610E+05
MN-54	0.000E+00	3.900E+07	0.000E+00	8.640E+06	0.000E+00	1.430E+07	0.000E+00	8.840E+06
MN-56	0.000E+00	3.100E-02	0.000E+00	2.660E-02	0.000E+00	2.810E+00	0.000E+00	5.340E-03
FE-55	1.350E+08	8.730E+07	0.000E+00	0.000E+00	4.270E+07	1.110E+07	0.000E+00	2.330E+07
FE-59	2.240E+08	3.920E+08	0.000E+00	0.000E+00	1.160E+08	1.870E+08	0.000E+00	1.540E+08
CO-58	0.000E+00	2.420E+07	0.000E+00	0.000E+00	0.000E+00	6.040E+07	0.000E+00	6.050E+07
CO-60	0.000E+00	8.820E+07	0.000E+00	0.000E+00	0.000E+00	2.100E+08	0.000E+00	2.080E+08
NI-63	3.490E+10	2.160E+09	0.000E+00	0.000E+00	0.000E+00	1.070E+08	0.000E+00	1.210E+09
NI-65	3.510E+00	3.970E-01	0.000E+00	0.000E+00	0.000E+00	3.020E+01	0.000E+00	1.800E-01
CU-64	0.000E+00	1.850E+05	0.000E+00	3.140E+05	0.000E+00	3.810E+06	0.000E+00	8.590E+04
ZN-65	5.550E+09	1.900E+10	0.000E+00	9.230E+09	0.000E+00	1.610E+10	0.000E+00	8.780E+09
ZN-69	2.020E-11	3.630E-11	0.000E+00	1.510E-11	0.000E+00	2.960E-09	0.000E+00	2.700E-12
BR-83	0.000E+00	0.000E+00	0.000E+00	0.000E+00	0.000E+00	0.000E+00	0.000E+00	9.340E-01
BR-84	0.000E+00	0.000E+00	0.000E+00	0.000E+00	0.000E+00	0.000E+00	0.000E+00	1.260E-22
BR-85	0.000E+00	0.000E+00	0.000E+00	0.000E+00	0.000E+00	0.000E+00	0.000E+00	0.000E+00
RB-86	0.000E+00	2.230E+10	0.000E+00	0.000E+00	0.000E+00	5.690E+08	0.000E+00	1.100E+10
RB-88	0.000E+00	1.880E-44	0.000E+00	0.000E+00	0.000E+00	1.830E-44	0.000E+00	1.030E-44
RB-89	0.000E+00	3.290E-52	0.000E+00	0.000E+00	0.000E+00	1.120E-52	0.000E+00	2.260E-52
SR-89	1.260E+10	0.000E+00	0.000E+00	0.000E+00	0.000E+00	2.590E+08	0.000E+00	3.610E+08
SR-90	1.220E+11	0.000E+00	0.000E+00	0.000E+00	0.000E+00	1.520E+09	0.000E+00	3.100E+10
SR-91	2.720E+05	0.000E+00	0.000E+00	0.000E+00	0.000E+00	3.220E+05	0.000E+00	9.830E+03

APPENDIX J

R_i Infant Dose Factors for use in the Gaseous Dose Calculations

Agegroup:	INFANT	Pathway:	Grs/Cow/Milk (CMILK)			Units:	m^2·mrem/yr / µCi/sec; mrem/yr / µCi/m^3 (H-3)	
Nuclide	**Bone**	**Liver**	**Thyroid**	**Kidney**	**Lung**	**Gilli**	**Skin**	**Total Body**
SR-92	4.640E+00	0.000E+00	0.000E+00	0.000E+00	0.000E+00	5.000E+01	0.000E+00	1.720E-01
Y-90	6.810E+02	0.000E+00	0.000E+00	0.000E+00	0.000E+00	9.410E+05	0.000E+00	1.830E+01
Y-91	7.330E+04	0.000E+00	0.000E+00	0.000E+00	0.000E+00	5.250E+06	0.000E+00	1.950E+03
Y-91M	5.670E-19	0.000E+00	0.000E+00	0.000E+00	0.000E+00	1.890E-15	0.000E+00	1.930E-20
Y-92	5.380E-04	0.000E+00	0.000E+00	0.000E+00	0.000E+00	1.030E+01	0.000E+00	1.510E-05
Y-93	2.160E+00	0.000E+00	0.000E+00	0.000E+00	0.000E+00	1.700E+04	0.000E+00	5.870E-02
ZR-95	6.800E+03	1.660E+03	0.000E+00	1.790E+03	0.000E+00	8.260E+05	0.000E+00	1.180E+03
ZR-97	4.060E+00	6.970E-01	0.000E+00	7.030E-01	0.000E+00	4.450E+04	0.000E+00	3.180E-01
NB-95	5.930E+05	2.440E+05	0.000E+00	1.750E+05	0.000E+00	2.060E+08	0.000E+00	1.410E+05
MO-99	0.000E+00	2.080E+08	0.000E+00	3.110E+08	0.000E+00	6.850E+07	0.000E+00	4.060E+07
TC-99M	2.750E+01	5.670E+01	0.000E+00	6.100E+02	2.960E+01	1.650E+04	0.000E+00	7.300E+02
TC-101	2.470E-59	3.110E-59	0.000E+00	3.700E-58	1.700E-59	5.280E-57	0.000E+00	3.080E-58
RU-103	8.670E+03	0.000E+00	0.000E+00	1.800E+04	0.000E+00	1.050E+05	0.000E+00	2.900E+03
RU-105	8.050E-03	0.000E+00	0.000E+00	5.920E-02	0.000E+00	3.200E+00	0.000E+00	2.710E-03
RU-106	1.900E+05	0.000E+00	0.000E+00	2.250E+05	0.000E+00	1.440E+06	0.000E+00	2.380E+04
AG-110M	3.860E+08	2.820E+08	0.000E+00	4.030E+08	0.000E+00	1.460E+10	0.000E+00	1.860E+08
TE-125M	1.510E+08	5.040E+07	5.070E+07	0.000E+00	0.000E+00	7.180E+07	0.000E+00	2.040E+07
TE-127	6.320E+03	2.120E+03	5.140E+03	1.540E+04	0.000E+00	1.330E+05	0.000E+00	1.360E+03
TE-127M	4.210E+08	1.400E+08	1.220E+08	1.040E+09	0.000E+00	1.700E+08	0.000E+00	5.100E+07
TE-129	2.720E-09	9.380E-10	2.280E-09	6.770E-09	0.000E+00	2.170E-07	0.000E+00	6.350E-10
TE-129M	5.570E+08	1.910E+08	2.140E+08	1.390E+09	0.000E+00	3.330E+08	0.000E+00	8.580E+07
TE-131	3.430E-32	1.270E-32	3.060E-32	8.760E-32	0.000E+00	1.380E-30	0.000E+00	9.610E-33
TE-131M	3.380E+06	1.360E+06	2.750E+06	9.350E+06	0.000E+00	2.290E+07	0.000E+00	1.120E+06
TE-132	2.110E+07	1.040E+07	1.540E+07	6.530E+07	0.000E+00	3.870E+07	0.000E+00	9.750E+06
I-130	3.550E+06	7.810E+06	8.750E+08	8.580E+06	0.000E+00	1.670E+06	0.000E+00	3.130E+06

APPENDIX J

R_i Infant Dose Factors for use in the Gaseous Dose Calculations

Agegroup:	INFANT	Pathway:	Grs/Cow/Milk (CMILK)			Units:	m^2·mrem/yr / µCi/sec; mrem/yr / µCi/m^3 (H-3)	
Nuclide	**Bone**	**Liver**	**Thyroid**	**Kidney**	**Lung**	**Gilli**	**Skin**	**Total Body**
I-131	2.720E+09	3.200E+09	1.050E+12	3.740E+09	0.000E+00	1.140E+08	0.000E+00	1.410E+09
I-132	1.430E+00	2.900E+00	1.360E+02	3.240E+00	0.000E+00	2.350E+00	0.000E+00	1.030E+00
I-133	3.630E+07	5.280E+07	9.600E+09	6.210E+07	0.000E+00	8.930E+06	0.000E+00	1.550E+07
I-134	1.760E-11	3.600E-11	8.400E-10	4.030E-11	0.000E+00	3.720E-11	0.000E+00	1.280E-11
I-135	1.120E+05	2.230E+05	2.000E+07	2.490E+05	0.000E+00	8.080E+04	0.000E+00	8.140E+04
CS-134	3.650E+10	6.800E+10	0.000E+00	1.750E+10	7.180E+09	1.850E+08	0.000E+00	6.870E+09
CS-136	1.980E+09	5.810E+09	0.000E+00	2.320E+09	4.740E+08	8.820E+07	0.000E+00	2.170E+09
CS-137	5.150E+10	6.020E+10	0.000E+00	1.620E+10	6.550E+09	1.880E+08	0.000E+00	4.270E+09
CS-138	8.390E-23	1.360E-22	0.000E+00	6.800E-23	1.060E-23	2.180E-22	0.000E+00	6.610E-23
BA-139	4.270E-07	2.830E-10	0.000E+00	1.700E-10	1.720E-10	2.710E-05	0.000E+00	1.240E-08
BA-140	2.410E+08	2.410E+05	0.000E+00	5.720E+04	1.480E+05	5.920E+07	0.000E+00	1.240E+07
BA-141	3.930E-45	2.690E-48	0.000E+00	1.620E-48	1.640E-48	4.800E-44	0.000E+00	1.240E-46
BA-142	2.430E-79	2.020E-82	0.000E+00	1.160E-82	1.220E-82	1.000E-78	0.000E+00	1.200E-80
LA-140	4.050E+01	1.600E+01	0.000E+00	0.000E+00	0.000E+00	1.880E+05	0.000E+00	4.110E+00
LA-142	1.700E-10	6.250E-11	0.000E+00	0.000E+00	0.000E+00	1.060E-05	0.000E+00	1.500E-11
CE-141	4.340E+04	2.640E+04	0.000E+00	8.150E+03	0.000E+00	1.370E+07	0.000E+00	3.110E+03
CE-143	3.970E+02	2.630E+05	0.000E+00	7.670E+01	0.000E+00	1.540E+06	0.000E+00	3.000E+01
CE-144	2.330E+06	9.520E+05	0.000E+00	3.850E+05	0.000E+00	1.330E+08	0.000E+00	1.300E+05
PR-143	1.490E+03	5.550E+02	0.000E+00	2.060E+02	0.000E+00	7.840E+05	0.000E+00	7.360E+01
PR-144	5.690E-53	2.200E-53	0.000E+00	7.980E-54	0.000E+00	1.020E-48	0.000E+00	2.870E-54
ND-147	8.810E+02	9.050E+02	0.000E+00	3.490E+02	0.000E+00	5.740E+05	0.000E+00	5.550E+01
W-187	6.080E+04	4.230E+04	0.000E+00	0.000E+00	0.000E+00	2.480E+06	0.000E+00	1.460E+04
NP-239	3.650E+01	3.260E+00	0.000E+00	6.510E+00	0.000E+00	9.430E+04	0.000E+00	1.840E+00

APPENDIX J

R_i Infant Dose Factors for use in the Gaseous Dose Calculations

Agegroup:	INFANT	Pathway:	Grs/Goat/Milk (GMILK)			Units:	m^2·mrem/yr / µCi/sec; mrem/yr / µCi/m^3 (H-3)	
Nuclide	**Bone**	**Liver**	**Thyroid**	**Kidney**	**Lung**	**Gilli**	**Skin**	**Total Body**
H-3	0.000E+00	4.860E+03	4.860E+03	4.860E+03	4.860E+03	4.860E+03	0.000E+00	4.860E+03
C-14	2.340E+09	5.000E+08	5.000E+08	5.000E+08	5.000E+08	5.000E+08	0.000E+00	5.000E+08
NA-24	1.850E+06	1.850E+06	1.850E+06	1.850E+06	1.850E+06	1.850E+06	0.000E+00	1.850E+06
P-32	1.920E+11	1.130E+10	0.000E+00	0.000E+00	0.000E+00	2.600E+09	0.000E+00	7.460E+09
CR-51	0.000E+00	0.000E+00	1.260E+04	2.760E+03	2.460E+04	5.640E+05	0.000E+00	1.940E+04
MN-54	0.000E+00	4.680E+06	0.000E+00	1.040E+06	0.000E+00	1.720E+06	0.000E+00	1.060E+06
MN-56	0.000E+00	3.720E-03	0.000E+00	3.190E-03	0.000E+00	3.380E-01	0.000E+00	6.410E-04
FE-55	1.760E+06	1.130E+06	0.000E+00	0.000E+00	5.550E+05	1.440E+05	0.000E+00	3.030E+05
FE-59	2.920E+06	5.100E+06	0.000E+00	0.000E+00	1.510E+06	2.430E+06	0.000E+00	2.010E+06
CO-58	0.000E+00	2.910E+06	0.000E+00	0.000E+00	0.000E+00	7.250E+06	0.000E+00	7.260E+06
CO-60	0.000E+00	1.060E+07	0.000E+00	0.000E+00	0.000E+00	2.520E+07	0.000E+00	2.500E+07
NI-63	4.190E+09	2.590E+08	0.000E+00	0.000E+00	0.000E+00	1.290E+07	0.000E+00	1.450E+08
NI-65	4.210E-01	4.760E-02	0.000E+00	0.000E+00	0.000E+00	3.620E+00	0.000E+00	2.170E-02
CU-64	0.000E+00	2.070E+04	0.000E+00	3.500E+04	0.000E+00	4.240E+05	0.000E+00	9.570E+03
ZN-65	6.660E+08	2.280E+09	0.000E+00	1.110E+09	0.000E+00	1.930E+09	0.000E+00	1.050E+09
ZN-69	2.420E-12	4.360E-12	0.000E+00	1.810E-12	0.000E+00	3.550E-10	0.000E+00	3.240E-13
BR-83	0.000E+00	0.000E+00	0.000E+00	0.000E+00	0.000E+00	0.000E+00	0.000E+00	1.120E-01
BR-84	0.000E+00	0.000E+00	0.000E+00	0.000E+00	0.000E+00	0.000E+00	0.000E+00	1.510E-23
BR-85	0.000E+00	0.000E+00	0.000E+00	0.000E+00	0.000E+00	0.000E+00	0.000E+00	0.000E+00
RB-86	0.000E+00	2.670E+09	0.000E+00	0.000E+00	0.000E+00	6.830E+07	0.000E+00	1.320E+09
RB-88	0.000E+00	2.250E-45	0.000E+00	0.000E+00	0.000E+00	2.190E-45	0.000E+00	1.230E-45
RB-89	0.000E+00	3.940E-53	0.000E+00	0.000E+00	0.000E+00	1.340E-53	0.000E+00	2.720E-53
SR-89	2.640E+10	0.000E+00	0.000E+00	0.000E+00	0.000E+00	5.430E+08	0.000E+00	7.580E+08
SR-90	2.550E+11	0.000E+00	0.000E+00	0.000E+00	0.000E+00	3.190E+09	0.000E+00	6.500E+10
SR-91	5.700E+05	0.000E+00	0.000E+00	0.000E+00	0.000E+00	6.750E+05	0.000E+00	2.060E+04

APPENDIX J

R_i Infant Dose Factors for use in the Gaseous Dose Calculations

Agegroup:	INFANT	Pathway:	Grs/Goat/Milk (GMILK)			Units:	m^2·mrem/yr / µCi/sec; mrem/yr / µCi/m^3 (H-3)	
Nuclide	**Bone**	**Liver**	**Thyroid**	**Kidney**	**Lung**	**Gilli**	**Skin**	**Total Body**
SR-92	9.750E+00	0.000E+00	0.000E+00	0.000E+00	0.000E+00	1.050E+02	0.000E+00	3.620E-01
Y-90	8.170E+01	0.000E+00	0.000E+00	0.000E+00	0.000E+00	1.130E+05	0.000E+00	2.190E+00
Y-91	8.790E+03	0.000E+00	0.000E+00	0.000E+00	0.000E+00	6.300E+05	0.000E+00	2.340E+02
Y-91M	6.810E-20	0.000E+00	0.000E+00	0.000E+00	0.000E+00	2.270E-16	0.000E+00	2.320E-21
Y-92	6.450E-05	0.000E+00	0.000E+00	0.000E+00	0.000E+00	1.230E+00	0.000E+00	1.810E-06
Y-93	2.590E-01	0.000E+00	0.000E+00	0.000E+00	0.000E+00	2.040E+03	0.000E+00	7.050E-03
ZR-95	8.170E+02	1.990E+02	0.000E+00	2.140E+02	0.000E+00	9.910E+04	0.000E+00	1.410E+02
ZR-97	4.870E-01	8.360E-02	0.000E+00	8.430E-02	0.000E+00	5.340E+03	0.000E+00	3.820E-02
NB-95	7.120E+04	2.930E+04	0.000E+00	2.100E+04	0.000E+00	2.480E+07	0.000E+00	1.700E+04
MO-99	0.000E+00	2.500E+07	0.000E+00	3.730E+07	0.000E+00	8.220E+06	0.000E+00	4.870E+06
TC-99M	3.300E+00	6.800E+00	0.000E+00	7.320E+01	3.550E+00	1.970E+03	0.000E+00	8.760E+01
TC-101	2.960E-60	3.730E-60	0.000E+00	4.440E-59	2.030E-60	6.340E-58	0.000E+00	3.690E-59
RU-103	1.040E+03	0.000E+00	0.000E+00	2.170E+03	0.000E+00	1.270E+04	0.000E+00	3.480E+02
RU-105	9.660E-04	0.000E+00	0.000E+00	7.110E-03	0.000E+00	3.840E-01	0.000E+00	3.250E-04
RU-106	2.280E+04	0.000E+00	0.000E+00	2.700E+04	0.000E+00	1.730E+05	0.000E+00	2.850E+03
AG-110M	4.630E+07	3.380E+07	0.000E+00	4.830E+07	0.000E+00	1.750E+09	0.000E+00	2.240E+07
TE-125M	1.810E+07	6.050E+06	6.090E+06	0.000E+00	0.000E+00	8.620E+06	0.000E+00	2.450E+06
TE-127	7.580E+02	2.540E+02	6.170E+02	1.850E+03	0.000E+00	1.590E+04	0.000E+00	1.630E+02
TE-127M	5.050E+07	1.680E+07	1.460E+07	1.240E+08	0.000E+00	2.040E+07	0.000E+00	6.120E+06
TE-129	3.260E-10	1.130E-10	2.740E-10	8.130E-10	0.000E+00	2.610E-08	0.000E+00	7.620E-11
TE-129M	6.690E+07	2.290E+07	2.570E+07	1.670E+08	0.000E+00	3.990E+07	0.000E+00	1.030E+07
TE-131	4.110E-33	1.520E-33	3.670E-33	1.050E-32	0.000E+00	1.660E-31	0.000E+00	1.150E-33
TE-131M	4.050E+05	1.630E+05	3.310E+05	1.120E+06	0.000E+00	2.750E+06	0.000E+00	1.350E+05
TE-132	2.530E+06	1.250E+06	1.850E+06	7.840E+06	0.000E+00	4.640E+06	0.000E+00	1.170E+06
I-130	4.260E+06	9.370E+06	1.050E+09	1.030E+07	0.000E+00	2.010E+06	0.000E+00	3.760E+06

APPENDIX J

R_i Infant Dose Factors for use in the Gaseous Dose Calculations

Agegroup:	INFANT	Pathway:	Grs/Goat/Milk (GMILK)			Units:	m^2·mrem/yr / µCi/sec; mrem/yr / µCi/m^3 (H-3)	
Nuclide	**Bone**	**Liver**	**Thyroid**	**Kidney**	**Lung**	**Gilli**	**Skin**	**Total Body**
I-131	3.260E+09	3.850E+09	1.260E+12	4.490E+09	0.000E+00	1.370E+08	0.000E+00	1.690E+09
I-132	1.720E+00	3.480E+00	1.630E+02	3.890E+00	0.000E+00	2.820E+00	0.000E+00	1.240E+00
I-133	4.350E+07	6.340E+07	1.150E+10	7.450E+07	0.000E+00	1.070E+07	0.000E+00	1.860E+07
I-134	2.110E-11	4.320E-11	1.010E-09	4.830E-11	0.000E+00	4.470E-11	0.000E+00	1.540E-11
I-135	1.350E+05	2.680E+05	2.400E+07	2.990E+05	0.000E+00	9.700E+04	0.000E+00	9.770E+04
CS-134	1.090E+11	2.040E+11	0.000E+00	5.250E+10	2.150E+10	5.540E+08	0.000E+00	2.060E+10
CS-136	5.930E+09	1.740E+10	0.000E+00	6.950E+09	1.420E+09	2.650E+08	0.000E+00	6.510E+09
CS-137	1.540E+11	1.810E+11	0.000E+00	4.850E+10	1.960E+10	5.650E+08	0.000E+00	1.280E+10
CS-138	2.520E-22	4.090E-22	0.000E+00	2.040E-22	3.190E-23	6.540E-22	0.000E+00	1.980E-22
BA-139	5.130E-08	3.400E-11	0.000E+00	2.040E-11	2.060E-11	3.250E-06	0.000E+00	1.480E-09
BA-140	2.890E+07	2.890E+04	0.000E+00	6.870E+03	1.780E+04	7.100E+06	0.000E+00	1.490E+06
BA-141	4.720E-46	3.230E-49	0.000E+00	1.940E-49	1.960E-49	5.760E-45	0.000E+00	1.490E-47
BA-142	2.920E-80	2.430E-83	0.000E+00	1.400E-83	1.470E-83	1.200E-79	0.000E+00	1.440E-81
LA-140	4.860E+00	1.920E+00	0.000E+00	0.000E+00	0.000E+00	2.250E+04	0.000E+00	4.930E-01
LA-142	2.040E-11	7.500E-12	0.000E+00	0.000E+00	0.000E+00	1.270E-06	0.000E+00	1.790E-12
CE-141	5.200E+03	3.170E+03	0.000E+00	9.790E+02	0.000E+00	1.640E+06	0.000E+00	3.740E+02
CE-143	4.760E+01	3.160E+04	0.000E+00	9.200E+00	0.000E+00	1.840E+05	0.000E+00	3.600E+00
CE-144	2.790E+05	1.140E+05	0.000E+00	4.620E+04	0.000E+00	1.600E+07	0.000E+00	1.560E+04
PR-143	1.780E+02	6.670E+01	0.000E+00	2.480E+01	0.000E+00	9.410E+04	0.000E+00	8.840E+00
PR-144	6.830E-54	2.640E-54	0.000E+00	9.570E-55	0.000E+00	1.230E-49	0.000E+00	3.440E-55
ND-147	1.060E+02	1.090E+02	0.000E+00	4.190E+01	0.000E+00	6.880E+04	0.000E+00	6.650E+00
W-187	7.300E+03	5.070E+03	0.000E+00	0.000E+00	0.000E+00	2.980E+05	0.000E+00	1.750E+03
NP-239	4.380E+00	3.910E-01	0.000E+00	7.810E-01	0.000E+00	1.130E+04	0.000E+00	2.210E-01

APPENDIX J

R_i Infant Dose Factors for use in the Gaseous Dose Calculations

Agegroup:	INFANT	Pathway:	Inhalation (INHL)			Units:	mrem/yr / µCi/m^3	
Nuclide	**Bone**	**Liver**	**Thyroid**	**Kidney**	**Lung**	**Gilli**	**Skin**	**Total Body**
H-3	0.000E+00	6.470E+02	6.470E+02	6.470E+02	6.470E+02	6.470E+02	0.000E+00	6.470E+02
C-14	2.650E+04	5.310E+03	5.310E+03	5.310E+03	5.310E+03	5.310E+03	0.000E+00	5.310E+03
NA-24	1.060E+04	1.060E+04	1.060E+04	1.060E+04	1.060E+04	1.060E+04	0.000E+00	1.060E+04
P-32	2.030E+06	1.120E+05	0.000E+00	0.000E+00	0.000E+00	1.610E+04	0.000E+00	7.740E+04
CR-51	0.000E+00	0.000E+00	5.750E+01	1.320E+01	1.280E+04	3.570E+02	0.000E+00	8.950E+01
MN-54	0.000E+00	2.530E+04	0.000E+00	4.980E+03	1.000E+06	7.060E+03	0.000E+00	4.980E+03
MN-56	0.000E+00	1.540E+00	0.000E+00	1.100E+00	1.250E+04	7.170E+04	0.000E+00	2.210E-01
FE-55	1.970E+04	1.170E+04	0.000E+00	0.000E+00	8.690E+04	1.090E+03	0.000E+00	3.330E+03
FE-59	1.360E+04	2.350E+04	0.000E+00	0.000E+00	1.010E+06	2.480E+04	0.000E+00	9.480E+03
CO-58	0.000E+00	1.220E+03	0.000E+00	0.000E+00	7.770E+05	1.110E+04	0.000E+00	1.820E+03
CO-60	0.000E+00	8.020E+03	0.000E+00	0.000E+00	4.510E+06	3.190E+04	0.000E+00	1.180E+04
NI-63	3.390E+05	2.040E+04	0.000E+00	0.000E+00	2.090E+05	2.420E+03	0.000E+00	1.160E+04
NI-65	2.390E+00	2.840E-01	0.000E+00	0.000E+00	8.120E+03	5.010E+04	0.000E+00	1.230E-01
CU-64	0.000E+00	1.880E+00	0.000E+00	3.980E+00	9.300E+03	1.500E+04	0.000E+00	7.740E-01
ZN-65	1.930E+04	6.260E+04	0.000E+00	3.250E+04	6.470E+05	5.140E+04	0.000E+00	3.110E+04
ZN-69	5.390E-02	9.670E-02	0.000E+00	4.020E-02	1.470E+03	1.320E+04	0.000E+00	7.180E-03
BR-83	0.000E+00	0.000E+00	0.000E+00	0.000E+00	0.000E+00	0.000E+00	0.000E+00	3.810E+02
BR-84	0.000E+00	0.000E+00	0.000E+00	0.000E+00	0.000E+00	0.000E+00	0.000E+00	4.000E+02
BR-85	0.000E+00	0.000E+00	0.000E+00	0.000E+00	0.000E+00	0.000E+00	0.000E+00	2.040E+01
RB-86	0.000E+00	1.900E+05	0.000E+00	0.000E+00	0.000E+00	3.040E+03	0.000E+00	8.820E+04
RB-88	0.000E+00	5.570E+02	0.000E+00	0.000E+00	0.000E+00	3.390E+02	0.000E+00	2.870E+02
RB-89	0.000E+00	3.210E+02	0.000E+00	0.000E+00	0.000E+00	6.820E+01	0.000E+00	2.060E+02
SR-89	3.980E+05	0.000E+00	0.000E+00	0.000E+00	2.030E+06	6.400E+04	0.000E+00	1.140E+04
SR-90	4.090E+07	0.000E+00	0.000E+00	0.000E+00	1.120E+07	1.310E+05	0.000E+00	2.590E+06
SR-91	9.560E+01	0.000E+00	0.000E+00	0.000E+00	5.260E+04	7.340E+04	0.000E+00	3.460E+00

APPENDIX J

R_i Infant Dose Factors for use in the Gaseous Dose Calculations

Agegroup:	INFANT	Pathway:	Inhalation (INHL)			Units:	mrem/yr / µCi/m^3	
Nuclide	**Bone**	**Liver**	**Thyroid**	**Kidney**	**Lung**	**Gilli**	**Skin**	**Total Body**
SR-92	1.050E+01	0.000E+00	0.000E+00	0.000E+00	2.380E+04	1.400E+05	0.000E+00	3.910E-01
Y-90	3.290E+03	0.000E+00	0.000E+00	0.000E+00	2.690E+05	1.040E+05	0.000E+00	8.820E+01
Y-91	5.880E+05	0.000E+00	0.000E+00	0.000E+00	2.450E+06	7.030E+04	0.000E+00	1.570E+04
Y-91M	4.070E-01	0.000E+00	0.000E+00	0.000E+00	2.790E+03	2.350E+03	0.000E+00	1.390E-02
Y-92	1.640E+01	0.000E+00	0.000E+00	0.000E+00	2.450E+04	1.270E+05	0.000E+00	4.610E-01
Y-93	1.500E+02	0.000E+00	0.000E+00	0.000E+00	7.640E+04	1.670E+05	0.000E+00	4.070E+00
ZR-95	1.150E+05	2.790E+04	0.000E+00	3.110E+04	1.750E+06	2.170E+04	0.000E+00	2.030E+04
ZR-97	1.500E+02	2.560E+01	0.000E+00	2.590E+01	1.100E+05	1.400E+05	0.000E+00	1.170E+01
NB-95	1.570E+04	6.430E+03	0.000E+00	4.720E+03	4.790E+05	1.270E+04	0.000E+00	3.780E+03
MO-99	0.000E+00	1.650E+02	0.000E+00	2.650E+02	1.350E+05	4.870E+04	0.000E+00	3.230E+01
TC-99M	1.400E-03	2.880E-03	0.000E+00	3.110E-02	8.110E+02	2.030E+03	0.000E+00	3.720E-02
TC-101	6.510E-05	8.230E-05	0.000E+00	9.790E-04	5.840E+02	8.440E+02	0.000E+00	8.120E-04
RU-103	2.020E+03	0.000E+00	0.000E+00	4.240E+03	5.520E+05	1.610E+04	0.000E+00	6.790E+02
RU-105	1.220E+00	0.000E+00	0.000E+00	8.990E-01	1.570E+04	4.840E+04	0.000E+00	4.100E-01
RU-106	8.680E+04	0.000E+00	0.000E+00	1.070E+05	1.160E+07	1.640E+05	0.000E+00	1.090E+04
AG-110M	9.980E+03	7.220E+03	0.000E+00	1.090E+04	3.670E+06	3.300E+04	0.000E+00	5.000E+03
TE-125M	4.760E+03	1.990E+03	1.620E+03	0.000E+00	4.470E+05	1.290E+04	0.000E+00	6.580E+02
TE-127	2.230E+00	9.530E-01	1.850E+00	4.860E+00	1.030E+04	2.440E+04	0.000E+00	4.890E-01
TE-127M	1.670E+04	6.900E+03	4.870E+03	3.750E+04	1.310E+06	2.730E+04	0.000E+00	2.070E+03
TE-129	7.880E-02	3.470E-02	6.750E-02	1.750E-01	3.000E+03	2.630E+04	0.000E+00	1.880E-02
TE-129M	1.410E+04	6.090E+03	5.470E+03	3.180E+04	1.680E+06	6.900E+04	0.000E+00	2.230E+03
TE-131	1.740E-02	8.220E-03	1.580E-02	3.990E-02	2.060E+03	8.220E+03	0.000E+00	5.000E-03
TE-131M	1.070E+02	5.500E+01	8.930E+01	2.650E+02	1.990E+05	1.190E+05	0.000E+00	3.630E+01
TE-132	3.720E+02	2.370E+02	2.790E+02	1.030E+03	3.400E+05	4.410E+04	0.000E+00	1.760E+02
I-130	6.360E+03	1.390E+04	1.600E+06	1.530E+04	0.000E+00	1.990E+03	0.000E+00	5.570E+03

APPENDIX J

R_i Infant Dose Factors for use in the Gaseous Dose Calculations

Agegroup:	INFANT	Pathway:	Inhalation (INHL)			Units:	mrem/yr / µCi/m^3	
Nuclide	**Bone**	**Liver**	**Thyroid**	**Kidney**	**Lung**	**Gilli**	**Skin**	**Total Body**
I-131	3.790E+04	4.440E+04	1.480E+07	5.180E+04	0.000E+00	1.060E+03	0.000E+00	1.960E+04
I-132	1.690E+03	3.540E+03	1.690E+05	3.950E+03	0.000E+00	1.900E+03	0.000E+00	1.260E+03
I-133	1.320E+04	1.920E+04	3.560E+06	2.240E+04	0.000E+00	2.160E+03	0.000E+00	5.600E+03
I-134	9.210E+02	1.880E+03	4.450E+04	2.090E+03	0.000E+00	1.290E+03	0.000E+00	6.650E+02
I-135	3.860E+03	7.600E+03	6.960E+05	8.470E+03	0.000E+00	1.830E+03	0.000E+00	2.770E+03
CS-134	3.960E+05	7.030E+05	0.000E+00	1.900E+05	7.970E+04	1.330E+03	0.000E+00	7.450E+04
CS-136	4.830E+04	1.350E+05	0.000E+00	5.640E+04	1.180E+04	1.430E+03	0.000E+00	5.290E+04
CS-137	5.490E+05	6.120E+05	0.000E+00	1.720E+05	7.130E+04	1.330E+03	0.000E+00	4.550E+04
CS-138	5.050E+02	7.810E+02	0.000E+00	4.100E+02	6.540E+01	8.760E+02	0.000E+00	3.980E+02
BA-139	1.480E+00	9.840E-04	0.000E+00	5.920E-04	5.950E+03	5.100E+04	0.000E+00	4.300E-02
BA-140	5.600E+04	5.600E+01	0.000E+00	1.340E+01	1.600E+06	3.840E+04	0.000E+00	2.900E+03
BA-141	1.570E-01	1.080E-04	0.000E+00	6.500E-05	2.970E+03	4.750E+03	0.000E+00	4.970E-03
BA-142	3.980E-02	3.300E-05	0.000E+00	1.900E-05	1.550E+03	6.930E+02	0.000E+00	1.960E-03
LA-140	5.050E+02	2.000E+02	0.000E+00	0.000E+00	1.680E+05	8.480E+04	0.000E+00	5.150E+01
LA-142	1.030E+00	3.770E-01	0.000E+00	0.000E+00	8.220E+03	5.950E+04	0.000E+00	9.040E-02
CE-141	2.770E+04	1.670E+04	0.000E+00	5.250E+03	5.170E+05	2.160E+04	0.000E+00	1.990E+03
CE-143	2.930E+02	1.930E+02	0.000E+00	5.640E+01	1.160E+05	4.970E+04	0.000E+00	2.210E+01
CE-144	3.190E+06	1.210E+06	0.000E+00	5.380E+05	9.840E+06	1.480E+05	0.000E+00	1.760E+05
PR-143	1.400E+04	5.240E+03	0.000E+00	1.970E+03	4.330E+05	3.720E+04	0.000E+00	6.990E+02
PR-144	4.790E-02	1.850E-02	0.000E+00	6.720E-03	1.610E+03	4.280E+03	0.000E+00	2.410E-03
ND-147	7.940E+03	8.130E+03	0.000E+00	3.150E+03	3.220E+05	3.120E+04	0.000E+00	5.000E+02
W-187	1.300E+01	9.020E+00	0.000E+00	0.000E+00	3.960E+04	3.560E+04	0.000E+00	3.120E+00
NP-239	3.710E+02	3.320E+01	0.000E+00	6.620E+01	5.950E+04	2.490E+04	0.000E+00	1.880E+01

APPENDIX J

R_i Infant Dose Factors for use in the Gaseous Dose Calculations

Agegroup:	INFANT	Pathway:	Ground Plane Deposition (GPD)			Units:	m^2·mrem/yr / µCi/sec	
Nuclide	**Bone**	**Liver**	**Thyroid**	**Kidney**	**Lung**	**Gilli**	**Skin**	**Total Body**
H-3	0.000E+00	0.000E+00	0.000E+00	0.000E+00	0.000E+00	0.000E+00	0.000E+00	0.000E+00
C-14	0.000E+00	0.000E+00	0.000E+00	0.000E+00	0.000E+00	0.000E+00	0.000E+00	0.000E+00
NA-24	1.190E+07	1.190E+07	1.190E+07	1.190E+07	1.190E+07	1.190E+07	1.390E+07	1.190E+07
P-32	0.000E+00	0.000E+00	0.000E+00	0.000E+00	0.000E+00	0.000E+00	0.000E+00	0.000E+00
CR-51	4.660E+06	4.660E+06	4.660E+06	4.660E+06	4.660E+06	4.660E+06	5.510E+06	4.660E+06
MN-54	1.390E+09	1.390E+09	1.390E+09	1.390E+09	1.390E+09	1.390E+09	1.630E+09	1.390E+09
MN-56	9.020E+05	9.020E+05	9.020E+05	9.020E+05	9.020E+05	9.020E+05	1.070E+06	9.020E+05
FE-55	0.000E+00	0.000E+00	0.000E+00	0.000E+00	0.000E+00	0.000E+00	0.000E+00	0.000E+00
FE-59	2.730E+08	2.730E+08	2.730E+08	2.730E+08	2.730E+08	2.730E+08	3.210E+08	2.730E+08
CO-58	3.790E+08	3.790E+08	3.790E+08	3.790E+08	3.790E+08	3.790E+08	4.440E+08	3.790E+08
CO-60	2.150E+10	2.150E+10	2.150E+10	2.150E+10	2.150E+10	2.150E+10	2.530E+10	2.150E+10
NI-63	0.000E+00	0.000E+00	0.000E+00	0.000E+00	0.000E+00	0.000E+00	0.000E+00	0.000E+00
NI-65	2.970E+05	2.970E+05	2.970E+05	2.970E+05	2.970E+05	2.970E+05	3.450E+05	2.970E+05
CU-64	6.070E+05	6.070E+05	6.070E+05	6.070E+05	6.070E+05	6.070E+05	6.880E+05	6.070E+05
ZN-65	7.470E+08	7.470E+08	7.470E+08	7.470E+08	7.470E+08	7.470E+08	8.590E+08	7.470E+08
ZN-69	0.000E+00	0.000E+00	0.000E+00	0.000E+00	0.000E+00	0.000E+00	0.000E+00	0.000E+00
BR-83	4.870E+03	4.870E+03	4.870E+03	4.870E+03	4.870E+03	4.870E+03	7.080E+03	4.870E+03
BR-84	2.030E+05	2.030E+05	2.030E+05	2.030E+05	2.030E+05	2.030E+05	2.360E+05	2.030E+05
BR-85	0.000E+00	0.000E+00	0.000E+00	0.000E+00	0.000E+00	0.000E+00	0.000E+00	0.000E+00
RB-86	8.990E+06	8.990E+06	8.990E+06	8.990E+06	8.990E+06	8.990E+06	1.030E+07	8.990E+06
RB-88	3.310E+04	3.310E+04	3.310E+04	3.310E+04	3.310E+04	3.310E+04	3.780E+04	3.310E+04
RB-89	1.230E+05	1.230E+05	1.230E+05	1.230E+05	1.230E+05	1.230E+05	1.480E+05	1.230E+05
SR-89	2.160E+04	2.160E+04	2.160E+04	2.160E+04	2.160E+04	2.160E+04	2.510E+04	2.160E+04
SR-90	0.000E+00	0.000E+00	0.000E+00	0.000E+00	0.000E+00	0.000E+00	0.000E+00	0.000E+00
SR-91	2.150E+06	2.150E+06	2.150E+06	2.150E+06	2.150E+06	2.150E+06	2.510E+06	2.150E+06

APPENDIX J

R_i Infant Dose Factors for use in the Gaseous Dose Calculations

Agegroup:	INFANT	Pathway:	Ground Plane Deposition (GPD)			Units:	m^2·mrem/yr / µCi/sec	
Nuclide	**Bone**	**Liver**	**Thyroid**	**Kidney**	**Lung**	**Gilli**	**Skin**	**Total Body**
SR-92	7.770E+05	7.770E+05	7.770E+05	7.770E+05	7.770E+05	7.770E+05	8.630E+05	7.770E+05
Y-90	4.490E+03	4.490E+03	4.490E+03	4.490E+03	4.490E+03	4.490E+03	5.310E+03	4.490E+03
Y-91	1.070E+06	1.070E+06	1.070E+06	1.070E+06	1.070E+06	1.070E+06	1.210E+06	1.070E+06
Y-91M	1.000E+05	1.000E+05	1.000E+05	1.000E+05	1.000E+05	1.000E+05	1.160E+05	1.000E+05
Y-92	1.800E+05	1.800E+05	1.800E+05	1.800E+05	1.800E+05	1.800E+05	2.140E+05	1.800E+05
Y-93	1.830E+05	1.830E+05	1.830E+05	1.830E+05	1.830E+05	1.830E+05	2.510E+05	1.830E+05
ZR-95	2.450E+08	2.450E+08	2.450E+08	2.450E+08	2.450E+08	2.450E+08	2.840E+08	2.450E+08
ZR-97	2.960E+06	2.960E+06	2.960E+06	2.960E+06	2.960E+06	2.960E+06	3.440E+06	2.960E+06
NB-95	1.370E+08	1.370E+08	1.370E+08	1.370E+08	1.370E+08	1.370E+08	1.610E+08	1.370E+08
MO-99	3.990E+06	3.990E+06	3.990E+06	3.990E+06	3.990E+06	3.990E+06	4.630E+06	3.990E+06
TC-99M	1.840E+05	1.840E+05	1.840E+05	1.840E+05	1.840E+05	1.840E+05	2.110E+05	1.840E+05
TC-101	2.040E+04	2.040E+04	2.040E+04	2.040E+04	2.040E+04	2.040E+04	2.260E+04	2.040E+04
RU-103	1.080E+08	1.080E+08	1.080E+08	1.080E+08	1.080E+08	1.080E+08	1.260E+08	1.080E+08
RU-105	6.360E+05	6.360E+05	6.360E+05	6.360E+05	6.360E+05	6.360E+05	7.210E+05	6.360E+05
RU-106	4.220E+08	4.220E+08	4.220E+08	4.220E+08	4.220E+08	4.220E+08	5.070E+08	4.220E+08
AG-110M	3.440E+09	3.440E+09	3.440E+09	3.440E+09	3.440E+09	3.440E+09	4.010E+09	3.440E+09
TE-125M	1.550E+06	1.550E+06	1.550E+06	1.550E+06	1.550E+06	1.550E+06	2.130E+06	1.550E+06
TE-127	2.980E+03	2.980E+03	2.980E+03	2.980E+03	2.980E+03	2.980E+03	3.280E+03	2.980E+03
TE-127M	9.160E+04	9.160E+04	9.160E+04	9.160E+04	9.160E+04	9.160E+04	1.080E+05	9.160E+04
TE-129	2.620E+04	2.620E+04	2.620E+04	2.620E+04	2.620E+04	2.620E+04	3.100E+04	2.620E+04
TE-129M	1.980E+07	1.980E+07	1.980E+07	1.980E+07	1.980E+07	1.980E+07	2.310E+07	1.980E+07
TE-131	2.920E+04	2.920E+04	2.920E+04	2.920E+04	2.920E+04	2.920E+04	3.450E+07	2.920E+04
TE-131M	8.030E+06	8.030E+06	8.030E+06	8.030E+06	8.030E+06	8.030E+06	9.460E+06	8.030E+06
TE-132	4.230E+06	4.230E+06	4.230E+06	4.230E+06	4.230E+06	4.230E+06	4.980E+06	4.230E+06
I-130	5.510E+06	5.510E+06	5.510E+06	5.510E+06	5.510E+06	5.510E+06	6.690E+06	5.510E+06

APPENDIX J

R_i Infant Dose Factors for use in the Gaseous Dose Calculations

Agegroup:	INFANT	Pathway:	Ground Plane Deposition (GPD)			Units:	m^2·mrem/yr / µCi/sec	
Nuclide	**Bone**	**Liver**	**Thyroid**	**Kidney**	**Lung**	**Gilli**	**Skin**	**Total Body**
I-131	1.720E+07	1.720E+07	1.720E+07	1.720E+07	1.720E+07	1.720E+07	2.090E+07	1.720E+07
I-132	1.250E+06	1.250E+06	1.250E+06	1.250E+06	1.250E+06	1.250E+06	1.470E+06	1.250E+06
I-133	2.450E+06	2.450E+06	2.450E+06	2.450E+06	2.450E+06	2.450E+06	2.980E+06	2.450E+06
I-134	4.470E+05	4.470E+05	4.470E+05	4.470E+05	4.470E+05	4.470E+05	5.300E+05	4.470E+05
I-135	2.530E+06	2.530E+06	2.530E+06	2.530E+06	2.530E+06	2.530E+06	2.950E+06	2.530E+06
CS-134	6.860E+09	6.860E+09	6.860E+09	6.860E+09	6.860E+09	6.860E+09	8.000E+09	6.860E+09
CS-136	1.510E+08	1.510E+08	1.510E+08	1.510E+08	1.510E+08	1.510E+08	1.710E+08	1.510E+08
CS-137	1.030E+10	1.030E+10	1.030E+10	1.030E+10	1.030E+10	1.030E+10	1.200E+10	1.030E+10
CS-138	3.590E+05	3.590E+05	3.590E+05	3.590E+05	3.590E+05	3.590E+05	4.100E+05	3.590E+05
BA-139	1.060E+05	1.060E+05	1.060E+05	1.060E+05	1.060E+05	1.060E+05	1.190E+05	1.060E+05
BA-140	2.050E+07	2.050E+07	2.050E+07	2.050E+07	2.050E+07	2.050E+07	2.350E+07	2.050E+07
BA-141	4.170E+04	4.170E+04	4.170E+04	4.170E+04	4.170E+04	4.170E+04	4.750E+04	4.170E+04
BA-142	4.490E+04	4.490E+04	4.490E+04	4.490E+04	4.490E+04	4.490E+04	5.110E+04	4.490E+04
LA-140	1.920E+07	1.920E+07	1.920E+07	1.920E+07	1.920E+07	1.920E+07	2.180E+07	1.920E+07
LA-142	7.600E+05	7.600E+05	7.600E+05	7.600E+05	7.600E+05	7.600E+05	9.120E+05	7.600E+05
CE-141	1.370E+07	1.370E+07	1.370E+07	1.370E+07	1.370E+07	1.370E+07	1.540E+07	1.370E+07
CE-143	2.310E+06	2.310E+06	2.310E+06	2.310E+06	2.310E+06	2.310E+06	2.630E+06	2.310E+06
CE-144	6.950E+07	6.950E+07	6.950E+07	6.950E+07	6.950E+07	6.950E+07	8.040E+07	6.950E+07
PR-143	0.000E+00	0.000E+00	0.000E+00	0.000E+00	0.000E+00	0.000E+00	0.000E+00	0.000E+00
PR-144	1.830E+03	1.830E+03	1.830E+03	1.830E+03	1.830E+03	1.830E+03	2.110E+03	1.830E+03
ND-147	8.390E+06	8.390E+06	8.390E+06	8.390E+06	8.390E+06	8.390E+06	1.010E+07	8.390E+06
W-187	2.350E+06	2.350E+06	2.350E+06	2.350E+06	2.350E+06	2.350E+06	2.730E+06	2.350E+06
NP-239	1.710E+06	1.710E+06	1.710E+06	1.710E+06	1.710E+06	1.710E+06	1.980E+06	1.710E+06