Incyte Corporation
Experimental Station
Rt. 141 & Henry Clay Road
Wilmington, Delaware 19880
Tel 302.498.6776
Fax 302.425.2760
Web www.incyte.com

NMSB2

May 29, 2007

License No. 07-30728-01
Docket No. 030-35986

RECEIVED
REGION 1
2007 JUN -4 PM 12: 20

U.S. Nuclear Regulatory Commission
Nuclear Materials Safety Branch 2
Division of Nuclear Materials Safety
475 Allendale Road
King of Prussia, PA 19406-1415

Subject: Amendment to License No. 07-30728-01
Reference Control Number: ~~139485~~ 140592

Dear Mr. Lawyer:

Incyte Corporation, located at DuPont Experimental Station, buildings E336 and E400, Route 141 & Henry Clay Road, Wilmington, Delaware would like to remove the facilities located at 1090 Elkton Road, buildings 112 and 115, Newark, Delaware from our NRC license 07-30728-01. Incyte no longer leases or operates in these facilities. The facilities have been decommissioned by RSO, Inc. and are returned to the E.I. du Pont de Nemours and Company. A copy for the decommissioning report is enclosed.

Also, Incyte Corporation would like to amend our NRC license 07-30728-01 limit for Carbon 14 from the current 50 millicurie limit to 300 millicuries. As the company prepares for potential future FDA submissions we would like to be in position to prepare for additional research studies as potential drug candidates progress in the approval process. The increase in license limit requested does not exceed the limits set forth in 10 CFR 30.35 requiring Financial Assurance and Recordkeeping for Decommissioning.

140592

NMSS/RGN1 MATERIALS-002

If you require additional information please contact me at 302-498-6827 or by e-mail at mczerwinski@incyte.com .

Sincerely,

Mark Czerwinski, CHMM, CSP
RSO/Environmental Health & Safety Engineer
Incyte Corporation
Experimental Station
Rt. 141 & Henry Clay Road
Wilmington, Delaware 19880

Incyte Genomics
Newark, De.

Decommissioning Report

Prepared By:

RSO, Inc.

Laurel, MD

On Site Work: **August and September 2003**

Report Date:

For:

Incyte Genomics

Newark, De

this page blank

TABLE OF CONTENTS

Section Page

1.0 INTRODUCTION AND BACKGROUND 1

1.1 Introduction and Site Specific Information 1

1.2 Purpose and Scope 1

2.0 BUILDING DESCRIPTION AND EQUIPMENT 1

2.1 Historical Use of Radioactive Material 1

2.2 Laboratories That Used Radioactive Material 2

3.0 RADIOLOGICAL SURVEYS 2

3.1 Acceptable Decontamination Level 2

3.2 Classification of Survey Areas and Planned Surveys 2

3.3 Survey Discussion 3

3.4 Survey Methods 4
Survey Results (Wipe Number, Grid Loc., Surface, Location) 4
Wipe Tests for Removable Contamination 4
Direct Measurements 4
Scan Survey 5
Exposure Rate Measurements 5

3.5 Background Radiation Level Determination 5

3.6 Quality Assurance 5

4.0 SURVEY INSTRUMENTATION 5

4.1 Description of Survey Instrumentation 5

Wipe Test Sample Analysis 6

4.2 Minimum Detectable Concentration for Scanning Technique 7

4.3 Minimum Detectable Activity (Concentration) for Direct Measurements 8

5.0 SURVEY RESULTS 8

5.1 Exposure Rate Measurements 9

5.2 Radioactive Waste 9

6.0 REFERENCES 9

7.0 ATTACHMENTS 10

1.0 INTRODUCTION AND BACKGROUND

1.1 Introduction and Site Specific Information

Incyte Genomics is a drug discovery company applying its expertise in genomics, medicinal chemistry and molecular, cellular and in-vivo biology to the discovery and development of novel small molecule and protein therapeutics. Incyte Genomics controlled 2 buildings in which radioactive materials were used or stored at the Stine Haskell Research Center in Newark, DE. Incyte is moving their operations out of these buildings to facilities at the Dupont Experimental Station in Wilmington, DE. The vacated buildings will be returned to Dupont control after the completion of the decommissioning.

The licensee terminated waste operations with tenant activities effective August 2003 and completed the last shipment, under routine operations, of radioactive waste from Building 115 in September 2003.

The decommissioning will require the removal of radioactive waste and sources, the removal of contaminated equipment (either decontaminated to free release or package for off-site disposal as radioactive waste), and decontamination of residual contamination above the selected release limits of facility surfaces.

The decommissioning of the Incyte portion of the Stine Haskell Facility was performed in several phases with radiological surveys performed to meet the requirements of each phase:

Equipment Surveys

Radiological surveys were performed to designate equipment and items for disposition, as radioactive waste, contaminated equipment to be transferred to another facility, or for unrestricted release.

Final Status Surveys

The survey included the minimum required wipes as per MARSSIM 5.5.2 and then concentrated on surfaces considered to have a reasonable probability of having residual surface contamination with levels above the selected allowable contamination levels.

This survey was conducted such that it could be used as the Final Radiological Survey based on the levels of contamination found and the extent of remediation activities.

1.2 Purpose and Scope

This survey report was prepared to provide a summary of decommissioning activity and the results of the

2.0 BUILDING DESCRIPTION AND EQUIPMENT

2.1 Historical Use of Radioactive Material

Table 1. List of Licensed Isotopes

Radionuclide	Symbol/Mass Number	Half-Life	Decay Mode	Primary Radiation Emitted	Energy
Hydrogen- 3 (Tritium)	H-3	12.3 y	Beta	Beta	18.6 keV (max)
Carbon-14	C-14	5730 y	Beta	Beta	156 keV (max)
Phosphorus-32	P-32	14.3 d	Beta	Beta	1710 keV (max)
Phosphorus-33	P-33	25.3 d	Beta	Beta	249 keV (max)
Sulfur-35	S-35	87.5 d	Beta	Beta	167 keV (max)
Iodine-125	I-125	59.4 d	Electron Capture	X-Rays and Gamma	~27 keV @ ~~73~~140% Abundance

Biomedical research (add information from license)

2.2 Laboratories That Used Radioactive Material

Building S112 Laboratories 2, 28, 37

Building S115 Laboratories 8, 84, 85, 86, 87

3.0 RADIOLOGICAL SURVEYS

3.1 Acceptable Decontamination Level

The release values for the Final Status Surveys were the DCGL's, calculated using DandD vers 2.1.0 along with an ALARA (As Low As Reasonably Achievable) level for the release of buildings and equipment. If the level of total surface contamination (removable and non-removable) for beta-gamma emitters is greater than the release criteria, averaged over a 1 m^2 area, Incyte will initiate corrective action, which could include decontamination or disposal as radioactive waste.

3.2 Classification of Survey Areas and Planned Surveys

Based on the routine periodic surveys of the laboratories that used radioactive material and interviews with the Radiation Safety Officer no areas of widespread contamination were expected.

Areas or rooms in each survey unit were categorized by RSO, Inc. according to the probability of contamination and assigned a level of survey (survey Class) for the purpose of establishing the sampling and measurement frequency. The rooms in which radioactive materials appeared to have a high probability to have been used were designated as Class I survey units. Lower potential use areas were classified as Class II Survey Units. Other rooms/areas with little or no potential for contamination were designated as Class III survey units.

Table 2. Proposed classification and measurement frequencies for the Post Remediation Survey.

Survey Type	Sample Interval	Survey Points (Wipes and Direct Measurements)	Scan Area Floor	Surface Scans	Scan Area Walls (up to 2 m)	Scan Area Ceiling
I	Per MARSSIM	12 Major equipment	100% of accessible area	Benches, hoods and major equipment	10%	10%
II	Per MARSSIM	12	100% of accessible area	Benches, hoods and major equipment	10%	10%
III	N/A	Selected 1 to 10 per laboratory or area	10% of accessible area	—	—	—

Additional survey points were selected to support assumptions made about lack of contamination and to meet the potential future uses of each building.

Class I areas – None

Class II Areas – Laboratories, Waste Storage, etc.

Class III Areas – Offices, Hallways, etc.

3.3 Survey Discussion

The Surveys included scans, direct and gamma exposure-rate measurements, and wipe tests for removable radioactive contamination.

Hydrogen-3 (^{3}H - 12 y $t_{1/2}$), Carbon-14 (^{14}C - 5730 y $t_{1/2}$), and Iodine-125 (125I – 59.4 d $t_{1/2}$) were identified as the primary radionuclides of interest. This was based on the use and half-life. It should be noted that contamination from other licensed radionuclides would also be detected by the survey techniques used.

Hydrogen-3 and Carbon-14 emit low energy beta radiation. Beta sensitive survey meters (large area gas flow proportional detectors with nominal efficiency of ~10% cpm per dpm) were chosen for the surface scans (Scan) and direct measurements (Direct) to provide the greatest sensitivity for the radionuclides, and this type of detector has good sensitivity most other radionuclides, except ^{3}H.

Iodine-125 is a gamma/x-ray emitter and while gas proportional detectors will respond to gamma radiation, a survey meter with a NaI probe was used for more effective surface scanning.

Tritium contamination was evaluated through the collection and analysis of wipe tests. Wipe test were analyzed on-site using liquid scintillation counting techniques.

Exposure rates (X-Rates) were measured using survey meters that display in uR/h (microRoentgen per hour) to provide results in conventional units for gamma radiation levels.

3.4 Survey Methods

Three methods were used to assess residual radioactivity:

wipe tests to evaluate removable radioactive contamination, including ^{3}H

surface scans to access the presence of small areas of contamination

and direct measurements using survey meters to access the total radioactive contamination on a surface.

Exposure rate measurements were also made to support the assertion that there was no residual contamination from gamma emitters (other than ^{125}I). The results of these surveys are reported on the data sheets for each area surveyed.

Survey maps were used for floor and wall surfaces for the purpose of referencing the location of wipes, direct radiation measurements, and other survey activities. All grids used for Class I and II areas were established using MARSSIM guidelines in 5.5.2.4.

Table 3. Method for calculating the number of samples per MARSSIM.

Radionuclide	1 mRem DCGL (dpm/100cm^2) per DandD vers 2.1.0	Z(1-α) And Z(1-β)	σ	Relative Shift Δ/σ	Sign P	Sample Number	Sample Number + 10%
Hydrogen- 3 (Tritium)	4.55E+06	1.645	12.8	3.0	0.998650	10.9	12.0
Carbon-14	1.35E+05	1.645	4.6	3.0	0.998650	10.9	12.0
Phosphorus-32	4.55E+05	1.645	4.6	3.0	0.998650	10.9	12.0
Phosphorus-33	3.47E+05	1.645	4.6	3.0	0.998650	10.9	12.0
Sulfur-35	1.50E+06	1.645	4.6	3.0	0.998650	10.9	12.0
Iodine-125	2.65E+04	1.645	4.6	3.0	0.998650	10.9	12.0

Survey Results (Wipe Number, Grid Loc., Surface, Location)

The Wipe Number, Surface (type), (drywall, concrete, etc.), Location (wall, floor, ceiling, etc.), were recorded, the wipe location marked on the survey map, and the surface was numbered during the survey for reference at each survey locations for direct measurements and wipe tests.

Wipe Tests for Removable Contamination

The amount of removable radioactive material was determined by wiping approximately 100 cm^2 of the surface with a dry paper, using moderate pressure, and assessing the amount of radioactive material on the wipe area using liquid scintillation counting (3-window "dpm" analysis). The results are reported for the ^{3}H window and the ^{14}C window in units of dpm/100 cm^2.

Direct Measurements

Direct radiation measurements for beta and or beta/gamma surface activity were performed at select locations using the same survey meters as used for scans but in a static mode. Measurements were conducted by integrating counts over a 1-minute count

time and represent the total activity on the surface except for ^3H ("fixed and removable contamination") . The results are reported in units of dpm/100 cm^2 for comparison to the Acceptable Contamination Level.

Scan Survey

Scan surveys were performed using large area alpha and beta sensitive proportional detectors (100 cm^2 or 425 cm^2) detectors coupled to an analog/digital rate-meters with an audio output. Surface scanning speeds were one detector width per second. To optimize detection of elevated radiation levels during scanning, audible indicators were used. The results are reported for the highest count rate observed during the scan and the average count rate as estimated by the surveyor. The average count rate was corrected for the probe size and converted to units of dpm/100 cm^2 for comparison to the Acceptable Contamination Level.

Exposure Rate Measurements

Gamma exposure rates were scanned, at 1 m above surfaces and measurements made and documented at contact with the subject surfaces, using a Bicron microRem survey ("plastic" gamma scintillation detector). The results are reported in units of uR/h. Exposure rates above 10 uR/h were investigated.

3.5 Background Radiation Level Determination

Background exposure rates were collected from various surface types in offices and labs in the same building, at locations near the use areas, with the same construction but with no indication of radioactive material contamination.

Daily backgrounds were performed and recorded for each instrument before starting survey work each day.

It should be noted that the subject radionuclides are not present in normal background at concentrations that impact on contamination surveys. Any determination of residual radioactivity must be made in the context of the extent to which such residual radioactivity is statistically distinguishable from background radiation. All survey meters respond to the natural levels of background radiation. Background radiation varies under different conditions and an average instrument response must be used to correct the "gross" response of the instrument.

3.6 Quality Assurance

Survey meters used to perform the Scoping Survey had been calibrated using radioactive standards traceable to the National Institute of Standards and Technology (NIST) within 6 months of their use on this project. Performance checks were completed on each survey meter at the beginning of each day.

The liquid scintillation counter used by to analyze the wipe tests and was serviced and calibrated (quench curve re-determined) by the manufacturer prior to use. Daily quality control counts of a background and standard sample were performed.

4.0 SURVEY INSTRUMENTATION

4.1 Description of Survey Instrumentation

The survey instruments that were used to perform the radiological surveys are shown in Table 4. The calibration and efficiency data for the survey meters that were used for Post

Remediation Surveys are shown on the Meter Information Sheets (See Attachment 2). See Attachment 1 for copies of the calibration certificates.

Table 4. Survey instruments used to conduct Post Remediation Surveys.

Survey Meter	Probe Model	Probe Type	Probe Area/Size	Description
Ludlum Model 2221 Scaler/Ratemeter	Ludlum 43-68	Gas Flow Proportional Detector	100 cm^2	Scans and Direct Measurements of Surfaces
Ludlum Floor Monitor Ludlum Model 2221 Scaler/Ratemeter	Ludlum 43-37	Gas Flow Proportional Detector	425 cm^2	Scans and Direct Measurements of Surfaces
Ludlum Model 2360 Scaler/Ratemeter	Ludlum 44-3	NaI Crystal	15 cm^2	Scans and Direct Measurements of Surfaces
Bicron "MicroRem"	N/A	Internal Plastic Scintillation Detector	1" x 1"	Assessment of Low Level Gamma Exposure Rates

Wipe Test Sample Analysis

Determinations of the removable surface activity were based on analyses of wipe samples collected over areas of approximately 100 cm^2. The wipe tests were analyzed using a liquid scintillation counter (LSC).

Table 5. Liquid Scintillation Counter used to analyze wipe tests for Post Remediation Surveys.

LSC	Model	Analysis Program	Vial Sizes	Beta Sensitivity	Alpha Sensitivity
Beckman	LS6500	3-Window DPM	20-mL 7 mL	MDA ~ 30 dpm	N/A
Packard	Tri-carb	3-Window DPM	7 mL 20 mL	MDA ~ 30 dpm	N/A

For each analysis, gross counts were converted into activity per sample by the LSC analysis software (operated in a 3 window (channel) dpm mode), using quench correction (loss of detection efficiency due to individual sample characteristics) and the following method of data reduction:

$$WipeTest\ MDC = \frac{4.65\sqrt{R_b * t} + 2.71}{E * \left(\frac{wipe\ area}{100cm^2}\right) * t}$$

Where:

A	=	net removable activity (dpm/100 cm^2),
C	=	integrated gross counts (counts),
t	=	sample counting time (min),
R_b	=	instrument background count rate (cpm),
E_H	=	efficiency (c/d), as a function of quench, and
a	=	wipe collection area (normally assumed to be 100 cm^2).

Using Equation 1, the minimum detectable activity/concentration (MDA or MDC) of a wipe test was estimated to be less than 50 dpm for a 1-minute count time. MDA/MDC is an estimate of the "sensitivity" of a radiation measurement. The "sensitivity" is improved or lowered by decreases in the background count (or count-rate, R_b), efficiency, and/or count time.

4.2 Minimum Detectable Concentration for Scanning Technique

The minimum detectable concentration for the scan technique (Scan MDC) was estimated using the suggested method provided in MARSSIM. The MDA for a surface scan for ^{14}C was estimated to be less than 5,000 dpm for both instruments used for scanning using assumptions made about the minimum detectable count rate, and surface-instrument-surveyor efficiency.

$$SCAN\,MDC = \frac{MDCR}{\sqrt{E_{hf} * \epsilon_i * \epsilon_s * A * C}}$$

MDCR = minimum detectable count rate of the ideal Poisson observer

E_{hf} = human factors efficiency

e_i = instrument efficiency

e_s = source efficiency

A = probe area

C = other constants and factors when needed (e.g., chemical recovery, time conversion factor, etc.)

Table 6. Scan MDA for large area proportional detectors used in the Post Remediation Surveys.

Survey Meter Manufacturer	Model	Window	Probe Size	Efficiency (relative cpm/dpm)	Sensitivity Scan MDA
Ludlum Instruments, Inc.	2221 w/ "hand-held" probe	Single Channel Gross Alpha/Beta	100 cm^2	13% to 19% for source at contact with	~ 3,500 dpm/100 cm^2

		Alpha/Beta		probe	
Ludlum Instruments, Inc.	2221 coupled to "floor monitor"	Single Channel Gross Alpha/Beta	425 cm^2	13% to 19% for source at contact with probe	~ 2,500 dpm/100 cm^2
Ludlum Instruments, Inc.	2221 w/Ludlum 44-3	Single Channel Gamma	15 cm^2	21% for source at contact with probe	~ 21,000 dpm/100 cm^2

4.3 Minimum Detectable Activity (Concentration) for Direct Measurements

The minimum detectable activity for the direct measurement technique (Direct MDA) was estimated using the suggested method provided in MARSSIM. The MDA for a direct measurement for ^{14}C was estimated to be less than 1,000 dpm/100 cm^2 for a 1-minute count time.

$$MDC = \frac{3 + 4.65\sqrt{C_b}}{T * \varepsilon_T * A * C}$$

C_b = background counts b

T = counting time in minutes

E_T= total detector efficiency in counts/disintegration

A = physical probe area in cm^2

C = other constants and factors when needed (e.g., chemical recovery, time conversion factor, etc.)

Table 7. Direct Measurement MDA for large area proportional detectors (100 cm^2) used in the Radiological Surveys.

Survey Meter Manufacturer	Model	Window	Probe Size	Efficiency (relative cpm/dpm)	Direct Measurement MDA
Ludlum Instruments, Inc.	2221 w/ "hand-held" probe	Single Channel Gross Alpha/Beta	100 cm^2	19% for source at contact with probe	~500 dpm/100 cm^2
Ludlum Instruments, Inc.	2221 w/Ludlum 44-3	Single Channel Gamma	15 cm^2	21% for source at contact with probe	~ 4,000 dpm/100 cm^2

5.0 SURVEY RESULTS

Attachment 1 contains the survey meter daily checks and calibration certificates.

Attachment 2 contains the survey results.

A survey data sheet (survey meter information: make, model, S/N, cal. date, surface material for background, sensitivity as MDA, MDCR, and efficiency), and a diagram/picture (if appropriate) is provided for each room or area.

During the survey, background levels varied according to the material surveyed, however for the data reduction for the direct measurements the background used was with the detector held in open air unless a more suitable background was available.

In all of the surveyed laboratories either no detectable contamination was found, or areas were decontaminated to undetectable levels of contamination.

5.1 Exposure Rate Measurements

The exposure rates, expressed in units of microRoentgen per hour (μR/h), in various areas of the facility were consistent with normal background. Surveys showed no areas of that varied from normal background. Exposure rates at contact with the "glazed surface of the small concrete block in the Work Area showed slightly elevated exposure rates. This was consistent with the higher background for this building material as compared to other concrete, metal or dry wall surfaces.

Table 8. Representative (gamma dose rates) exposure rates for indoor areas.

Location Description	Exposure Rate at 1 m (μR/h)	Exposure Rate at Contact (μR/h)
Laboratories / Waste Storage	5	5 to 10
Offices	5	5 to 10
Equipment	5	5 to 10
Hallways	5	5 to 10

5.2 Radioactive Waste

All radioactive waste generated under the decommissioning was packaged for disposal to meet the requirements of the Incyte Genomics waste program.

6.0 REFERENCES

6.1 U.S. Nuclear Regulatory Commission Regulatory Guide 1.86.

6.2 NUREG-1575, Rev. 1, EPA 402-R-97-016, Multi-Agency Radiation Survey and Site Investigation Manual (MARSSIM), August 2000.

7.0 ATTACHMENTS

Attachment 1	Survey Meter Calibration Certificates and Daily Checks
Attachment 2	Surveys

Attachment 1

Survey Meter Calibration Certificates and Daily Checks

Instrument

Instrument Make - Ludlum Model - 2221 S/N - 174947 **Probe** Make - Ludlum Model - 4368 S/N - 118629

Next Calibration Date 24-Jan-04 Min Net Source Check: 36317 Using 95% Confidence Level Check Source Isotope C-14

Max Net Source Check: 37068 Check Source Activity .149 uCi

Date	T_b	Background	T_s	Background Material	β Eff C-14	PA	Gross Source Check		β MDC	β Scan MDC	β MDCR	5000 dpm
28-Jul-03	10 min	4774 cpm	1 min	Air	20.0%	100 cm2	59458	BAD	523 dpm	5027 dpm	711 cpm	1477 cpm
31-Jul-03	10 min	4122 cpm	1 min	Air Using Jig	20.0%	100 cm2	37105	OK	487 dpm	4449 dpm	629 cpm	1412 cpm
1-Aug-03	10 min	4266 cpm	1 min	air	20.0%	100 cm2	37062	OK	495 dpm	4578 dpm	647 cpm	1427 cpm
1-Aug-03	10 min	4266 cpm	1 min	Air	20.0%	100 cm2	37348	OK	495 dpm	4578 dpm	647 cpm	1427 cpm
1-Aug-03	10 min	4178 cpm	1 min	Air	20.0%	100 cm2	37700	OK	490 dpm	4499 dpm	636 cpm	1418 cpm
5-Aug-03	10 min	4753 cpm	1 min	Air	20.0%	100 cm2	36799	OK	522 dpm	5009 dpm	708 cpm	1475 cpm
5-Aug-03	10 min	3435 cpm	1 min	Air	20.0%	100 cm2	36799	OK	446 dpm	3830 dpm	542 cpm	1344 cpm
6-Aug-03	10 min	3361 cpm	1 min	Air	20.0%	100 cm2	37041	OK	441 dpm	3762 dpm	532 cpm	1336 cpm
7-Aug-03	10 min	3182 cpm	1 min	Air	20.0%	100 cm2	37074	OK	430 dpm	3598 dpm	509 cpm	1318 cpm
20-Aug-03	10 min	3696 cpm	1 min	Air	20.0%	100 cm2	37278	OK	462 dpm	4067 dpm	575 cpm	1370 cpm
20-Aug-03	10 min	3834 cpm	1 min	Corian	20.0%	100 cm2	37278	OK	470 dpm	4191 dpm	593 cpm	1383 cpm
20-Aug-03	10 min	4083 cpm	1 min	floor tile	20.0%	100 cm2	37278	OK	485 dpm	4414 dpm	624 cpm	1408 cpm
20-Aug-03	10 min	4130 cpm	1 min	metal	20.0%	100 cm2	37278	OK	487 dpm	4456 dpm	630 cpm	1413 cpm
22-Aug-03	10 min	3096 cpm	1 min	Air	20.0%	100 cm2	37368	OK	424 dpm	3519 dpm	498 cpm	1310 cpm
22-Aug-03	10 min	4290 cpm	1 min	ceiling tile	20.0%	100 cm2	37368	OK	497 dpm	4599 dpm	650 cpm	1429 cpm
25-Aug-03	10 min	3050 cpm	1 min	Air	20.0%	100 cm2	37349	OK	421 dpm	3477 dpm	492 cpm	1305 cpm
25-Aug-03	10 min	4250 cpm	1 min	ceiling tile	20.0%	100 cm2	37349	OK	494 dpm	4563 dpm	645 cpm	1425 cpm
26-Aug-03	10 min	3380 cpm	1 min	Air	20.0%	100 cm2	36971	OK	442 dpm	3780 dpm	535 cpm	1338 cpm
27-Aug-03	10 min	3814 cpm	1 min	Air	20.0%	100 cm2	36893	OK	469 dpm	4173 dpm	590 cpm	1381 cpm
27-Aug-03	10 min	5174 cpm	1 min	Linoleum	20.0%	100 cm2	36893	OK	544 dpm	5378 dpm	761 cpm	1517 cpm
28-Aug-03	10 min	3768 cpm	1 min	Air	20.0%	100 cm2	36881	OK	466 dpm	4132 dpm	584 cpm	1377 cpm
28-Aug-03	10 min	3964 cpm	1 min	carpet	20.0%	100 cm2	36881	OK	478 dpm	4308 dpm	609 cpm	1396 cpm
29-Aug-03	10 min	3794 cpm	1 min	Air	20.0%	100 cm2	36851	OK	468 dpm	4155 dpm	588 cpm	1379 cpm
2-Sep-03	10 min	4185 cpm	1 min	Air	20.0%	100 cm2	37104	OK	491 dpm	4506 dpm	637 cpm	1419 cpm
2-Sep-03	10 min	5923 cpm	1 min	Linoleum	20.0%	100 cm2	37104	OK	581 dpm	6028 dpm	852 cpm	1592 cpm
2-Sep-03	10 min	5364 cpm	1 min	carpet	20.0%	100 cm2	37104	OK	553 dpm	5544 dpm	784 cpm	1536 cpm
3-Sep-03	10 min	4610 cpm	1 min	Air	20.0%	100 cm2	37112	OK	514 dpm	4883 dpm	691 cpm	1461 cpm
3-Sep-03	10 min	5355 cpm	1 min	Linoleum	20.0%	100 cm2	37112	OK	553 dpm	5536 dpm	783 cpm	1536 cpm
3-Sep-03	10 min	5870 cpm	1 min	Concrete	20.0%	100 cm2	37112	OK	578 dpm	11964 dpm	846 cpm	1587 cpm
4-Sep-03	10 min	4406 cpm	1 min	Air	20.0%	100 cm2	37053	OK	503 dpm	4702 dpm	665 cpm	1441 cpm
4-Sep-03	10 min	4892 cpm	1 min	carpet	20.0%	100 cm2	37053	OK	529 dpm	5131 dpm	726 cpm	1489 cpm
5-Sep-03	10 min	3400 cpm	1 min	Air	20.0%	100 cm2	37402	OK	444 dpm	3798 dpm	537 cpm	1340 cpm
8-Sep-03	10 min	2672 cpm	1 min	Air	20.0%	100 cm2	37332	OK	395 dpm	3125 dpm	442 cpm	1267 cpm
8-Sep-03	10 min	5405 cpm	1 min	Tar paper	20.0%	100 cm2	37332	OK	556 dpm	5579 dpm	789 cpm	1541 cpm
9-Sep-03	10 min	3401 cpm	1 min	Air	20.0%	100 cm2	37131	OK	444 dpm	3799 dpm	537 cpm	1340 cpm
9-Sep-03	10 min	3503 cpm	1 min	Tile	20.0%	100 cm2	37131	OK	450 dpm	3892 dpm	550 cpm	1291 cpm
9-Sep-03	10 min	4277 cpm	1 min	Linoleum	20.0%	100 cm2	37131	OK	496 dpm	4587 dpm	649 cpm	1428 cpm
9-Sep-03	10 min	3828 cpm	1 min	carpet	20.0%	100 cm2	37131	OK	470 dpm	4186 dpm	592 cpm	1383 cpm

T_b -	Background counting time (min)	PA -	Probe Area	cpm -	Counts per minute
R_b -	Background counting rate (cpm)	MDA -	Minimum Detectable Activity	dpm -	Disintegration's per minute
T_s -	Sample counting time (min)	MDCR -	Minimum Detectable Count Rate	min -	Minute
Eff -	Efficiency	cm^2 -	Area in square centimeters	uCi -	microCuries

Instrument

Instrument Make - Ludlum Model - 2221 S/N - 174947 **Probe** Make - Ludlum Model - 4368 S/N - 118629

Next Calibration Date 24-Jan-04 Min Net Source Check: 36317 Using 95% Confidence Level Check Source Isotope C-14

Max Net Source Check: 37068 Check Source Activity .149 uCi

Date	T_b	Background	T_s	Background Material	β Eff C-14	PA	Gross Source Check	β MDC	β Scan MDC	β MDCR	5000 dpm
10-Sep-03	10 min	2778 cpm	1 min	Air 102	20.0%	100 cm2	37098 OK	403 dpm	3224 dpm	456 cpm	1278 cpm
10-Sep-03	10 min	4475 cpm	1 min	Concrete 102	20.0%	100 cm2	37098 OK	507 dpm	4763 dpm	674 cpm	1448 cpm
10-Sep-03	10 min	2997 cpm	1 min	Air 115	20.0%	100 cm2	37098 OK	418 dpm	3428 dpm	485 cpm	1300 cpm
10-Sep-03	10 min	3409 cpm	1 min	Linoleum 115	20.0%	100 cm2	37098 OK	444 dpm	3806 dpm	538 cpm	1341 cpm
11-Sep-03	10 min	3181 cpm	1 min	Air morning	20.0%	100 cm2	36956 OK	430 dpm	3597 dpm	509 cpm	1318 cpm
11-Sep-03	10 min	5278 cpm	1 min	Air afternoon	20.0%	100 cm2	36956 OK	549 dpm	5469 dpm	773 cpm	1528 cpm
12-Sep-03	10 min	3324 cpm	1 min	Air	20.0%	100 cm2	37049 OK	439 dpm	3728 dpm	527 cpm	1332 cpm
12-Sep-03	10 min	4223 cpm	1 min	Concrete / Block	20.0%	100 cm2	37049 OK	493 dpm	4539 dpm	642 cpm	1422 cpm
16-Sep-03	10 min	3336 cpm	1 min	Air	20.0%	100 cm2	37039 OK	440 dpm	3739 dpm	529 cpm	1334 cpm
16-Sep-03	10 min	5046 cpm	1 min	Concrete	20.0%	100 cm2	37039 OK	537 dpm	10532 dpm	745 cpm	1505 cpm
17-Sep-03	10 min	3240 cpm	1 min	115 (Roof) Air	20.0%	100 cm2	37286 OK	434 dpm	3652 dpm	516 cpm	1324 cpm
17-Sep-03	10 min	3730 cpm	1 min	115 (Roof) Cement	20.0%	100 cm2	37286 OK	464 dpm	4097 dpm	579 cpm	1373 cpm
17-Sep-03	10 min	5760 cpm	1 min	115 (Roof) Rock	20.0%	100 cm2	37286 OK	573 dpm	5887 dpm	833 cpm	1576 cpm
17-Sep-03	10 min	4130 cpm	1 min	115 (Roof) Rubber/Plastic	20.0%	100 cm2	37286 OK	487 dpm	4456 dpm	630 cpm	1413 cpm
17-Sep-03	10 min	3641 cpm	1 min	115 Air	20.0%	100 cm2	37286 OK	459 dpm	4017 dpm	568 cpm	1364 cpm
17-Sep-03	10 min	4639 cpm	1 min	115 Linoleum	20.0%	100 cm2	37285 OK	516 dpm	4908 dpm	694 cpm	1464 cpm
17-Sep-03	10 min	3725 cpm	1 min	115Carpet	20.0%	100 cm2	37285 OK	464 dpm	4093 dpm	579 cpm	1373 cpm
18-Sep-03	10 min	3498 cpm	1 min	Air	20.0%	100 cm2	37376 OK	450 dpm	3887 dpm	550 cpm	1350 cpm
18-Sep-03	10 min	4650 cpm	1 min	Linoleum 115	20.0%	100 cm2	37376 OK	516 dpm	4918 dpm	696 cpm	1465 cpm

T_b - Background counting time (min)
R_b - Background counting rate (cpm)
T_s - Sample counting time (min)
Eff - Efficiency
PA - Probe Area
MDA - Minimum Detectable Activity
MDCR - Minimum Detectable Count Rate
cm^2 - Area in square centimeters
cpm - Counts per minute
dpm - Disintegration's per minute
min - Minute
uCi - microCuries

Instrument

Instrument Make - Ludlum Model - 2360 S/N - 170576 **Probe** Make - Ludlum Model - 44-3 S/N - 23387

Next Calibration Date 29-Jan-04 Min Net Source Check: 1207 Using 95% Confidence Level Check Source Isotope Sr-90

Max Net Source Check: 1351 Check Source Activity 0.013

Date	T_b	Background	T_s	Background Material	γ Eff C-14	PA	Gross Source Check	γ MDC	γ Scan MDC	γ MDCR	5000 dpm
31-Jul-03	10 min	794 cpm	1 min	Air	21.0%	5 cm2	1197	4,232 dpm	23523 dpm	175 cpm	1129 cpm
1-Aug-03	10 min	683 cpm	1 min	Air	21.0%	5 cm2	1347 OK	3,946 dpm	21098 dpm	157 cpm	1118 cpm
1-Aug-03	10 min	786 cpm	1 min	Air	21.0%	5 cm2	1385 OK	4,212 dpm	23351 dpm	173 cpm	1129 cpm
1-Aug-03	10 min	712 cpm	1 min	Air	21.0%	5 cm2	1315 OK	4,023 dpm	21738 dpm	161 cpm	1121 cpm

T_b	-	Background counting time (min)	PA	-	Probe Area	cpm	-	Counts per minute
R_b	-	Background counting rate (cpm)	MDA	-	Minimum Detectable Activity	dpm	-	Disintegration's per minute
T_s	-	Sample counting time (min)	MDCR	-	Minimum Detectable Count Rate	min	-	Minute
Eff	-	Efficiency	cm^2	-	Area in square centimeters	uCi	-	microCuries

Instrument

Instrument Make - Ludlum Model - 2360 S/N - 170576 **Probe** Make - Ludlum Model - 44-3 S/N - 23387

Next Calibration Date 29-Jan-04 Min Net Source Check: 198488 Using 95% Confidence Level Check Source Isotope Cs-137

Max Net Source Check: 200238 Check Source Activity 0.125

Date	T_b	Background	T_s	Background Material	γ Eff C-14	PA	Gross Source Check	γ MDC	γ Scan MDC	γ MDCR	5000 dpm
5-Aug-03	10 min	789 cpm	1 min	Air	21.0%	5 cm2	199442 OK	4,219 dpm	23415 dpm	174 cpm	1129 cpm
5-Aug-03	10 min	659 cpm	1 min	Air	21.0%	5 cm2	200193 OK	3,881 dpm	20563 dpm	153 cpm	1116 cpm
26-Aug-02	10 min	470 cpm	1 min	Air	21.0%	5 cm2	199445 OK	3,322 dpm	16201 dpm	120 cpm	1097 cpm
28-Aug-03	10 min	444 cpm	1 min	Air	21.0%	5 cm2	199953 OK	3,237 dpm	15573 dpm	116 cpm	1094 cpm
2-Sep-03	10 min	593 cpm	1 min	Air	21.0%	5 cm2	199967 OK	3,696 dpm	19074 dpm	142 cpm	1109 cpm
3-Aug-03	10 min	791 cpm	1 min	Air	21.0%	5 cm2	199641 OK	4,224 dpm	23458 dpm	174 cpm	1129 cpm
4-Aug-03	10 min	878 cpm	1 min	Air	21.0%	5 cm2	199665 OK	4,435 dpm	25316 dpm	188 cpm	1138 cpm
8-Sep-03	10 min	428 cpm	1 min	Air	21.0%	5 cm2	199532 OK	3,183 dpm	15184 dpm	113 cpm	1093 cpm
9-Sep-03	10 min	919 cpm	1 min	Air	21.0%	5 cm2	199851 OK	4,531 dpm	26180 dpm	194 cpm	1142 cpm
10-Sep-03	10 min	789 cpm	1 min	Air	21.0%	5 cm2	199108 OK	4,219 dpm	23415 dpm	174 cpm	1129 cpm
11-Sep-03	10 min	844 cpm	1 min	Air	21.0%	5 cm2	199882 OK	4,354 dpm	24594 dpm	183 cpm	1134 cpm
16-Sep-03	10 min	617 cpm	1 min	Air	21.0%	5 cm2	199731 OK	3,764 dpm	19619 dpm	146 cpm	1112 cpm

T_b - Background counting time (min)
R_b - Background counting rate (cpm)
T_s - Sample counting time (min)
Eff - Efficiency

PA - Probe Area
MDA - Minimum Detectable Activity
MDCR - Minimum Detectable Count Rate
cm^2 - Area in square centimeters

cpm - Counts per minute
dpm - Disintegration's per minute
min - Minute
uCi - microCuries

Instrument

Instrument Make - Ludlum Model - 2221 S/N - 108857 **Probe** Make - Ludlum Model - 4337 S/N - 74969

Next Calibration Date 24-Jan-04 Min Net Source Check: 21629 Using 95% Confidence Level Check Source Isotope C-14

Max Net Source Check: 22227 Check Source Activity .149 uCi

Date	T_b	Background	T_s	Background Material	β Eff C-14	PA	Gross Source Check		β MDC	β Scan MDC	β MDCR	5000 dpm
28-Jul-03	10 min	11479 cpm	1 min	Air	16.0%	425 cm2	60740	BAD	236 dpm	3141 dpm	1,510 cpm	1948 cpm
31-Jul-03	10 min	13860 cpm	1 min	Air Using Jig	16.0%	425 cm2	23314	OK	259 dpm	3710 dpm	1,784 cpm	2186 cpm
20-Aug-03	10 min	11100 cpm	1 min	linoleum	16.0%	425 cm2	23243	OK	232 dpm	3049 dpm	1,466 cpm	1910 cpm
22-Aug-03	10 min	7708 cpm	1 min	floor tile	16.0%	425 cm2	22554	OK	194 dpm	2220 dpm	1,068 cpm	1571 cpm
25-Aug-03	10 min	7637 cpm	1 min	floor tile	16.0%	425 cm2	22427	OK	193 dpm	2203 dpm	1,059 cpm	1564 cpm
27-Aug-03	10 min	7464 cpm	1 min	floor tile	16.0%	425 cm2	22776	OK	191 dpm	2160 dpm	1,038 cpm	1546 cpm
27-Aug-03	10 min	11122 cpm	1 min	linoleum	16.0%	425 cm2	22776	OK	232 dpm	3054 dpm	1,469 cpm	1912 cpm
28-Aug-03	10 min	8539 cpm	1 min	tile / carpet	16.0%	425 cm2	22804	OK	204 dpm	2426 dpm	1,166 cpm	1654 cpm
2-Sep-03	10 min	12808 cpm	1 min	linoleum	16.0%	425 cm2	23064	OK	249 dpm	3459 dpm	1,663 cpm	2081 cpm
2-Sep-03	10 min	9951 cpm	1 min	CARPET	16.0%	425 cm2	23064	OK	220 dpm	2771 dpm	1,332 cpm	1795 cpm
3-Sep-03	10 min	13091 cpm	1 min	linoleum	16.0%	425 cm2	23094	OK	252 dpm	3527 dpm	1,696 cpm	2109 cpm
3-Sep-03	10 min	14382 cpm	1 min	Concrete	16.0%	425 cm2	23094	OK	264 dpm	7668 dpm	1,844 cpm	2238 cpm
4-Sep-03	10 min	8899 cpm	1 min	Tile	16.0%	425 cm2	23039	OK	208 dpm	2514 dpm	1,209 cpm	1690 cpm
4-Sep-03	10 min	8123 cpm	1 min	Carpet	16.0%	425 cm2	23039	OK	199 dpm	2323 dpm	1,117 cpm	1612 cpm
8-Sep-03	10 min	14355 cpm	1 min	Tar paper	16.0%	425 cm2	23079	OK	263 dpm	3828 dpm	1,841 cpm	2236 cpm
9-Sep-03	10 min	12451 cpm	1 min	linoleum	16.0%	425 cm2	23156	OK	246 dpm	3374 dpm	1,622 cpm	2045 cpm
9-Sep-03	10 min	10511 cpm	1 min	Tile	16.0%	425 cm2	23156	OK	226 dpm	2907 dpm	1,398 cpm	1851 cpm
9-Sep-03	10 min	10774 cpm	1 min	CARPET	16.0%	425 cm2	23156	OK	229 dpm	2970 dpm	1,428 cpm	1877 cpm
10-Sep-03	10 min	14082 cpm	1 min	Concrete	16.0%	425 cm2	23046	OK	261 dpm	7526 dpm	1,809 cpm	2208 cpm
12-Sep-03	10 min	14148 cpm	1 min	Concrete	16.0%	425 cm2	23072	OK	262 dpm	7557 dpm	1,817 cpm	2215 cpm
16-Sep-03	10 min	13358 cpm	1 min	Concrete	16.0%	425 cm2	23254	OK	254 dpm	7181 dpm	1,726 cpm	2136 cpm
17-Sep-03	10 min	12336 cpm	1 min	linoleum	16.0%	425 cm2	22879	OK	245 dpm	3346 dpm	1,609 cpm	2034 cpm
17-Sep-03	10 min	9614 cpm	1 min	CARPET	16.0%	425 cm2	22879	OK	216 dpm	2689 dpm	1,293 cpm	1761 cpm
18-Sep-03	10 min	13223 cpm	1 min	linoleum	16.0%	425 cm2	22959	OK	253 dpm	3558 dpm	1,711 cpm	2122 cpm

T_b	-	Background counting time (min)	PA	-	Probe Area	cpm	-	Counts per minute
R_b	-	Background counting rate (cpm)	MDA	-	Minimum Detectable Activity	dpm	-	Disintegration's per minute
T_s	-	Sample counting time (min)	MDCR	-	Minimum Detectable Count Rate	min	-	Minute
Eff	-	Efficiency	cm^2	-	Area in square centimeters	uCi	-	microCuries

Instrument

Instrument Make - Ludlum Model - 2221 S/N - 157013 **Probe** Make - Ludlum Model - 4368 S/N - 120557

Next Calibration Date 24-Jan-04 Min Net Source Check: 39892 Using 95% Confidence Level Check Source Isotope C-14

Max Net Source Check: 40679 Check Source Activity .149 uCi

Date	T_b	Background	T_s	Background Material	β Eff C-14	PA	Gross Source Check	β MDC	β Scan MDC	β MDCR	5000 dpm
28-Jul-03	10 min	2458 cpm	1 min	Air	20.0%	100 cm2	55411 OK	380 dpm	2923 dpm	413 cpm	1246 cpm
31-Jul-03	10 min	2422 cpm	1 min	Air Using Jig	20.0%	100 cm2	40528 OK	377 dpm	2889 dpm	409 cpm	1242 cpm
1-Aug-03	10 min	2460 cpm	1 min	Air	20.0%	100 cm2	39900 OK	380 dpm	2925 dpm	414 cpm	1246 cpm
4-Aug-03	10 min	2344 cpm	1 min	Air	20.0%	100 cm2	40419 OK	371 dpm	2815 dpm	398 cpm	1234 cpm
5-Aug-03	10 min	2447 cpm	1 min	Air	20.0%	100 cm2	40269 OK	379 dpm	2913 dpm	412 cpm	1245 cpm
5-Aug-03	10 min	1946 cpm	1 min	Air	20.0%	100 cm2	40269 OK	339 dpm	2430 dpm	344 cpm	1195 cpm
6-Aug-03	10 min	1875 cpm	1 min	Air	20.0%	100 cm2	40126 OK	333 dpm	2361 dpm	334 cpm	1188 cpm
7-Aug-03	10 min	2250 cpm	1 min	Air	20.0%	100 cm2	40361 OK	364 dpm	2725 dpm	385 cpm	1225 cpm

T_b - Background counting time (min)
R_b - Background counting rate (cpm)
T_s - Sample counting time (min)
Eff - Efficiency
PA - Probe Area
MDA - Minimum Detectable Activity
MDCR - Minimum Detectable Count Rate
cm^2 - Area in square centimeters
cpm - Counts per minute
dpm - Disintegration's per minute
min - Minute
uCi - microCuries

RSO, Inc.
P.O. Box 1450
Laurel, MD 20725
(301) 953-2482

Certificate of Calibration

RSO Job No. **R4369**

ISSUED TO: RSO, Inc.
5204 Minnick Road
Laurel, MD 20707

CONTACT: Jim Dean, Sr.
PHONE: (301) 953-2482

PO NO: Contract 370

INSTRUMENT: LUDLUM
MODEL: 2221
TYPE: SCALER/RATE MET
SN: 174947

RSO, Inc. certifies that on 07/24/2003 the above described instrument was calibrated using a radioactive source to determine the efficiency for a specific radionuclide(s) and using electronically generated pulse for the linearity. Pulsed using Ludlum 500-2, S/N 159110.

The results are tabulated below. Calibration is traceable to NIST.

Calibration Data

	RANGE	EXPECTED	OBSERVED		C.F.
X	1	100	99	cpm	1.01
		400	399	cpm	1.00
X	10	1000	992	cpm	1.01
		4000	3987	cpm	1.00
X	100	10000	9917	cpm	1.01
		40000	39909	cpm	1.00
X	1000	100000	99150	cpm	1.01
		400000	399188	cpm	1.00
				C.F. AVERAGE	1.01

Probe type(s) **Probe1:** PROPORTIONAL **Probe2:** **Probe3:**

MODEL	SER#	WINDOW	GEOMETRY	VOLT	ISOTOPE 1	EFF.(%)	ISOTOPE 2	EFF.(%)	ISOTOPE 3	EFF.(%)	ISOTOPE 4	EFF.(%)
43-68	PR118629	FIXED	CONTACT	1769	14C	21	99Tc	22	Sr90	29		

Setting: High Voltage = 1765 dial; Threshold = 62 dial.

INSTRUMENT CHECKS

1 mR/hr CHECK: N/A
BATTERY CHECK: NORMAL
CHECK SOURCE 1: N/A READING:
CHECK SOURCE 2: N/A READING:

ENVIRONMENTAL

TEMP: 24°C
PRESS: 757 mmHg
HUMID: 52 %

THE SUGGESTED RECALIBRATION DATE FOR THIS INSTRUMENT IS **01/24/2004**

Calibrated By: _____ Dorsey Austin
Reviewed By: _____
Cal Date: 07/24/2003

Maryland License MD-33-021-01

8264

COPY

RSO, Inc.
P.O. Box 1450
Laurel, MD 20725
(301) 953-2482

Certificate of Calibration

RSO Job No. **R4376**

ISSUED TO: RSO, Inc.
5204 Minnick Road
Laurel, MD 20707

CONTACT: Jim Dean, Sr.
PHONE: (301) 953-2482

PO NO: Contract 370

INSTRUMENT: LUDLUM
MODEL: 2360
TYPE: DATA LOGGER
SN: 170576

RSO, Inc. certifies that on 07/29/2003 the above described instrument was calibrated using a radioactive source to determine the efficiency for a specific radionuclide(s) and using electronically generated pulse for the linearity. Pulsed using Ludlum 500-2, S/N 159110.

The results are tabulated below. Calibration is traceable to NIST.

Calibration Data

	RANGE	EXPECTED	OBSERVED		C.F.
X	1	100	100	cpm	1.00
		400	399	cpm	1.00
X	10	1000	997	cpm	1.00
		4000	3988	cpm	1.00
X	100	10000	9961	cpm	1.00
		40000	39880	cpm	1.00
X	1000	100000	99594	cpm	1.00
		400000	398785	cpm	1.00
				C.F. AVERAGE	1.00

Probe type(s) **Probe1:** SCINTILLATOR **Probe2:** **Probe3:**

MODEL	SER#	WINDOW	GEOMETRY	VOLT	ISOTOPE 1	EFF.(%)	ISOTOPE 2	EFF.(%)	ISOTOPE 3	EFF.(%)	ISOTOPE 4	EFF.(%)
44-3	PR023384	FIXED	CONTACT	795	125I*	21						

* Simulated using 129I with source at contact with probe. Note:Meter calibrated in the Beta mode only.

INSTRUMENT CHECKS

1 mR/hr CHECK: N/A
BATTERY CHECK: NORMAL
CHECK SOURCE 1: N/A READING:
CHECK SOURCE 2: N/A READING:

ENVIRONMENTAL

TEMP: 23°C
PRESS: 758 mmHg
HUMID: 54 %

THE SUGGESTED RECALIBRATION DATE FOR THIS INSTRUMENT IS **01/29/2004**

Calibrated By: _____ Ray Richard
Reviewed By: _____
Cal Date: 07/29/2003

Maryland License MD-33-021-01

8286

COPY

RSO, Inc.
P.O. Box 1450
Laurel, MD 20725
(301) 953-2482

Certificate of Calibration

RSO Job No. **R4369**

ISSUED TO: RSO, Inc.
5204 Minnick Road
Laurel, MD 20707

CONTACT: Jim Dean, Sr.
PHONE: (301) 953-2482

PO NO: Contract 370

INSTRUMENT: LUDLUM
MODEL: 2221
TYPE: SCALER/RATE MET
SN: 108857

RSO, Inc. certifies that on 07/24/2003 the above described instrument was calibrated using a radioactive source to determine the efficiency for a specific radionuclide(s) and using electronically generated pulse for the linearity. Pulsed using Ludlum 500-2, S/N 159110.

The results are tabulated below. Calibration is traceable to NIST.

Calibration Data

	RANGE	EXPECTED	OBSERVED		C.F.
X	1	100	99	cpm	1.01
		400	401	cpm	1.00
X	10	1000	996	cpm	1.00
		4000	3993	cpm	1.00
X	100	10000	9943	cpm	1.01
		40000	39900	cpm	1.00
X	1000	100000	99419	cpm	1.01
		400000	399284	cpm	1.00
				C.F. AVERAGE	1.00

Probe type(s) **Probe1:** PROPORTIONAL **Probe2:** **Probe3:**

MODEL	SER#	WINDOW	GEOMETRY	VOLT	ISOTOPE 1	EFF.(%)	ISOTOPE 2	EFF.(%)	ISOTOPE 3	EFF.(%)	ISOTOPE 4	EFF.(%)
43-37	RSO000504	FIXED	CONTACT	1860	14C	16	Tc99	15	Sr90	24		

Setting: High Voltage = 1860 dial; Threshold = 38 dial.

INSTRUMENT CHECKS

1 mR/hr CHECK: N/A
BATTERY CHECK: NORMAL
CHECK SOURCE 1: N/A READING:
CHECK SOURCE 2: N/A READING:

ENVIRONMENTAL

TEMP: 24°C
PRESS: 757 mmHg
HUMID: 52 %

THE SUGGESTED RECALIBRATION DATE FOR THIS INSTRUMENT IS **01/24/2004**

Calibrated By: _____ Dorsey Austin
Reviewed By: _____
Cal Date: 07/24/2003

Maryland License MD-33-021-01

8265

COPY

RSO, Inc.
P.O. Box 1450
Laurel, MD 20725
(301) 953-2482

Certificate of Calibration

RSO Job No. **R4369**

ISSUED TO: RSO, Inc.
5204 Minnick Road
Laurel, MD 20707

INSTRUMENT: LUDLUM
MODEL: 2221
TYPE: SCALER/RATE MET
SN: 157013

CONTACT: Jim Dean, Sr.
PHONE: (301) 953-2482

PO NO: Contract 370

RSO, Inc. certifies that on 07/24/2003 the above described instrument was calibrated using a radioactive source to determine the efficiency for a specific radionuclide(s) and using electronically generated pulse for the linearity. Pulsed using Ludlum 500-2, S/N 159110.

The results are tabulated below. Calibration is traceable to NIST.

Calibration Data

	RANGE	EXPECTED	OBSERVED		C.F.
X	1	100	99	cpm	1.01
		400	400	cpm	1.00
X	10	1000	989	cpm	1.01
		4000	3986	cpm	1.00
X	100	10000	9882	cpm	1.01
		40000	39885	cpm	1.00
X	1000	100000	98838	cpm	1.01
		400000	398897	cpm	1.00
				C.F. AVERAGE	1.01

Probe type(s) **Probe1:** PROPORTIONAL **Probe2:** **Probe3:**

MODEL	SER#	WINDOW	GEOMETRY	VOLT	ISOTOPE 1	EFF.(%)	ISOTOPE 2	EFF.(%)	ISOTOPE 3	EFF.(%)	ISOTOPE 4	EFF.(%)
43-68	PR120557	FIXED	CONTACT	1764	14C	20	99Tc	21	Sr90	29		

Setting: High Voltage = 1762 dial; Threshold = 26 dial.

INSTRUMENT CHECKS

1 mR/hr CHECK: N/A
BATTERY CHECK: NORMAL
CHECK SOURCE 1: N/A READING:
CHECK SOURCE 2: N/A READING:

ENVIRONMENTAL

TEMP: 24°C
PRESS: 757 mmHg
HUMID: 52 %

THE SUGGESTED RECALIBRATION DATE FOR THIS INSTRUMENT IS **01/24/2004**

Calibrated By: _____ Dorsey Austin
Reviewed By: _____
Cal Date: 07/24/2003

Maryland License MD-33-021-01

8262

COPY

Site: Incyte Genomics Building: 112 Lab/Room: 2

Start Date: 08/06/03 Finish Date: 08/07/03

Surveyor: Walter Wiencek Surveyor: Paul Madairy

Area Survey Results			*Wipe Test*		*β Direct*			*β Scan*					*γ Scan*				x-Rate
Wipe Number	Surface	Location	β dpm/100 cm^2	I-125 dpm/100 cm^2	Survey Meter #	Gross cpm/100 cm^2	dpm/100 cm^2 C-14	Survey Meter #	Grid No.	High cpm/100 cm^2	Average cpm/100 cm^2	Average dpm/100 cm^2 C-14	Survey Meter #	High cpm	Avg cpm	Average dpm/100 cm^2 I-125	Gross µRem/hr
1	Linoleum	Floor	<100	<100	6	597	<MDCR	7		1278	1162	<MDCR	2	100	60	<MDCR	3
2	Linoleum	Floor	<100	<100	6	652	<MDCR	7		1257	1131	<MDCR	2	100	60	<MDCR	
3	Linoleum	Floor	<100	<100	6	553	<MDCR	7		1242	1104	<MDCR	2	100	60	<MDCR	
4	Linoleum	Floor	<100	<100	6	604	<MDCR	7		1464	1226	<MDCR	2	100	60	<MDCR	
5	Drywall	Wall	<100	<100	4	394	<MDCR	4		499	413	<MDCR	2	100	60	<MDCR	
6	Metal	Hood	<100	<100	4	387	<MDCR	4		429	412	<MDCR	2	100	60	<MDCR	
7	Drywall	Wall	<100	<100	4	402	<MDCR	4		441	414	<MDCR	2	100	60	<MDCR	3
8	Drywall	Wall	<100	<100	4	449	<MDCR	4		507	451	<MDCR	2	100	60	<MDCR	
9	Metal	Door	<100	<100	4	500	<MDCR	4		544	513	<MDCR	2	100	60	<MDCR	
10	Drywall	Wall	<100	<100	4	448	<MDCR	4		541	471	<MDCR	2	100	60	<MDCR	
11	Metal	Hood	<100	<100	4	478	<MDCR	4		483	446	<MDCR	2	100	60	<MDCR	3
12	Drywall	Wall	<100	<100	4	418	<MDCR	4		437	399	<MDCR	2	100	60	<MDCR	
13	Linoleum	Floor	<100	<100	6	592	<MDCR	7		1505	1206	<MDCR	2	100	60	<MDCR	
14	Linoleum	Floor	<100	<100	6	571	<MDCR	7		1361	1145	<MDCR	2	100	60	<MDCR	
15	Linoleum	Floor	<100	<100	6	666	<MDCR	7		1409	1242	<MDCR	2	100	60	<MDCR	
16	Linoleum	Floor	<100	<100	6	623	<MDCR	7		1365	1209	<MDCR	2	100	60	<MDCR	3
17	Linoleum	Floor	<100	<100	6	552	<MDCR	7		1362	1155	<MDCR	2	100	60	<MDCR	
18	Linoleum	Floor	<100	<100	6	530	<MDCR	7		1533	1223	<MDCR	2	100	60	<MDCR	
19	Linoleum	Floor	<100	<100	6	631	<MDCR	7		1294	1149	<MDCR	2	100	60	<MDCR	
20	Linoleum	Floor	<100	<100	6	580	<MDCR	7		1266	1138	<MDCR	2	100	60	<MDCR	
21	Linoleum	Floor	<100	<100	6	593	<MDCR	7		1205	1172	<MDCR	2	100	60	<MDCR	3
22	Linoleum	Floor	<100	<100	6	582	<MDCR	7		1435	1218	<MDCR	2	100	60	<MDCR	
23	Linoleum	Floor	<100	<100	6	576	<MDCR	7		1318	1116	<MDCR	2	100	60	<MDCR	
24	Linoleum	Floor	<100	<100	6	618	<MDCR	7		1378	1287	<MDCR	2	100	60	<MDCR	3
25	Corian	Benchtop	<100	<100	4	502	<MDCR	4		532	482	<MDCR	2	100	60	<MDCR	3
26	Corian	Benchtop	<100	<100	4	521	<MDCR	4		602	536	<MDCR	2	100	60	<MDCR	
27	Corian	Benchtop	<100	<100	4	434	<MDCR	4		501	442	<MDCR	2	100	60	<MDCR	4
28	Corian	Benchtop	<100	<100	4	431	<MDCR	4		438	402	<MDCR	2	100	60	<MDCR	
29	Corian	Benchtop	123	<100	4	410	<MDCR	4		460	416	<MDCR	2	100	60	<MDCR	
30	Corian	Benchtop	<100	<100	4	496	<MDCR	4		519	479	<MDCR	2	100	60	<MDCR	4

Site: Incyte Genomics Building: 112 Lab/Room: 2

Start Date: 08/06/03 Finish Date: 08/07/03

Surveyor: Walter Wiencek Surveyor: Paul Madairy

Area Survey Results			*Wipe Test*		*β Direct*			*β Scan*					*γ Scan*				x-Rate
Wipe Number	Surface	Location	β dpm/100 cm^2	I-125 dpm/100 cm^2	Survey Meter #	Gross cpm/100 cm^2	dpm/100 cm^2 C-14	Survey Meter #	Grid No.	High cpm/100 cm^2	Average cpm/100 cm^2	Average dpm/100 cm^2 C-14	Survey Meter #	High cpm	Avg cpm	Average dpm/100 cm^2 I-125	Gross µRem/hr
31	Corian	Benchtop	<100	<100	4	438	<MDCR	4		537	475	<MDCR	2	100	60	<MDCR	3
32	Corian	Benchtop	<100	<100	4	552	<MDCR	4		564	538	<MDCR	2	100	60	<MDCR	
33	Metal	Drawers	<100	<100	4	431	<MDCR	4		448	421	<MDCR	2	100	60	<MDCR	
34	Metal	Drawers	<100	<100	4	414	<MDCR	4		433	416	<MDCR	2	100	60	<MDCR	
35	Metal	Drawers	<100	<100	4	404	<MDCR	4		417	405	<MDCR	2	100	60	<MDCR	
36	Corian	Drawers	<100	<100	4	398	<MDCR	4		428	407	<MDCR	2	100	60	<MDCR	3
37	Metal	Drawers	<100	<100	4	451	<MDCR	4		480	442	<MDCR	2	100	60	<MDCR	
38	Metal	Drawers	<100	<100	4	442	<MDCR	4		467	423	<MDCR	2	100	60	<MDCR	
39	Metal	Drawers	<100	<100	4	415	<MDCR	4		497	452	<MDCR	2	100	60	<MDCR	
40	Metal	Drawers	<100	<100	4	402	<MDCR	4		474	420	<MDCR	2	100	60	<MDCR	
41	Metal	Drawers	<100	<100	4	458	<MDCR	4		497	462	<MDCR	2	100	60	<MDCR	3
42	Metal	Drawers	<100	<100	4	381	<MDCR	4		459	405	<MDCR	2	100	60	<MDCR	
43	Metal	Drawers	<100	<100	4	494	<MDCR	4		580	525	<MDCR	2	100	60	<MDCR	
44	Metal	Drawers	<100	<100	4	510	<MDCR	4		599	520	<MDCR	2	100	60	<MDCR	
45	Metal	Drawers	<100	<100	4	552	<MDCR	4		563	515	<MDCR	2	100	60	<MDCR	
46	Metal	Drawers	<100	<100	4	469	<MDCR	4		481	442	<MDCR	2	100	60	<MDCR	
47	Rock Board	Drawers	<100	<100	4	538	<MDCR	4		623	552	<MDCR	2	100	60	<MDCR	
48	Corian	Drawers	<100	<100	4	439	<MDCR	4		505	473	<MDCR	2	100	60	<MDCR	
49	Metal	Drawers	<100	<100	4	485	<MDCR	4		504	461	<MDCR	2	100	60	<MDCR	
50	Metal	Drawers	<100	<100	4	474	<MDCR	4		470	424	<MDCR	2	100	60	<MDCR	
51	Metal	Drawers	<100	<100	4	488	<MDCR	4		517	493	<MDCR	2	100	60	<MDCR	3
52	Metal	Drawers	<100	<100	4	514	<MDCR	4		607	523	<MDCR	2	100	60	<MDCR	
53	Metal	Drawers	<100	<100	4	567	<MDCR	4		581	528	<MDCR	2	100	60	<MDCR	
54	Metal	Drawers	<100	<100	4	463	<MDCR	4		525	476	<MDCR	2	100	60	<MDCR	
55	Rock Board	Drawers	<100	<100	4	570	<MDCR	4		591	542	<MDCR	2	100	60	<MDCR	
56	Metal	Drawers	<100	<100	4	562	<MDCR	4		592	534	<MDCR	2	100	60	<MDCR	
57	Metal	Cabinet	<100	<100	4	440	<MDCR	4		508	473	<MDCR	2	100	60	<MDCR	
58	Metal	Cabinet	<100	<100	4	459	<MDCR	4		508	464	<MDCR	2	100	60	<MDCR	
59	Metal	Cabinet	<100	<100	4	500	<MDCR	4		533	502	<MDCR	2	100	60	<MDCR	
60	Metal	Cabinet	<100	<100	4	464	<MDCR	4		502	464	<MDCR	2	100	60	<MDCR	

Site: Incyte Genomics Building: 112 Lab/Room: 2

Start Date: 08/06/03 Finish Date: 08/07/03

Surveyor: Walter Wiencek Surveyor: Paul Madairy

Area Survey Results			*Wipe Test*		*β Direct*			*β Scan*					*γ Scan*				x-Rate
Wipe Number	Surface	Location	β dpm/100 cm²	I-125 dpm/100 cm²	Survey Meter #	Gross cpm/100 cm²	dpm/100 cm² C-14	Survey Meter #	Grid No.	High cpm/100 cm²	Average cpm/100 cm²	Average dpm/100 cm² C-14	Survey Meter #	High cpm	Avg cpm	Average dpm/100 cm² I-125	Gross µRem/hr
61	Metal	Cabinet	<100	<100	4	501	<MDCR	4		607	546	<MDCR	2	100	60	<MDCR	4
62	Metal	Cabinet	<100	<100	4	443	<MDCR	4		523	492	NA	2	100	60	<MDCR	
63	Metal	Cabinet	<100	<100	4	440	<MDCR	4		498	443	<MDCR	2	100	60	<MDCR	
64	Corian	Shelf	<100	<100	4	450	<MDCR	4		499	437	<MDCR	2	100	60	<MDCR	4
65	Metal	Door	<100	<100	4	399	<MDCR	4		451	401	<MDCR	2	100	60	<MDCR	
66	Metal	Electirical Panel	<100	<100	4	425	<MDCR	4		582	434	<MDCR	2	100	60	<MDCR	
67	Metal	Ceiling Vents	<100	<100	4	471	<MDCR	4		537	499	NA	2	100	60	<MDCR	
68	Metal	Ceiling Vents	<100	<100	4	559	<MDCR	4		598	546	<MDCR	2	100	60	<MDCR	3
69	Metal	Ceiling Vents	<100	<100	4	500	<MDCR	4		588	521	<MDCR	2	100	60	<MDCR	
70	Metal	Ceiling Vents	<100	<100	4	540	<MDCR	4		587	522	<MDCR	2	100	60	<MDCR	
71	Metal	Ceiling Vents	<100	<100	4	529	<MDCR	4		585	538	<MDCR	2	100	60	<MDCR	3
72	Metal	Sink	<100	<100	4	397	<MDCR	4		440	405	<MDCR	2	100	60	<MDCR	
73	Metal	Drain Swab	<100	<100	4	476	<MDCR	4				1044	2	100	60	<MDCR	4
74	PVC	Drain Swab	<100	<100	4	528	<MDCR	4				1044	2	100	60	<MDCR	3
75	PVC	PVC Drain	<100	<100	4	543	<MDCR	4		567	520	<MDCR	2	100	60	<MDCR	
76	Plastic	Water System	<100	<100	4	465	<MDCR	4		553	473	<MDCR	2	100	60	<MDCR	

Survey Meter Information

Site: Incyte Genomics Building: 112 Lab/Room: 2

	Meter 1		Meter 2		Meter 3		Meter 4		Meter 5	
Date:	8/26/2003		8/26/2003		8/27/2003		8/27/2003		8/26/2003	
Make:	Ludlum		Ludlum		Ludlum		Ludlum		Bicron	
Model:	2221		2360		2221		2221		MicroRem	
SN:	174947		170576		108857		174947		B694G	
Probe Make:	Ludlum		Ludlum		Ludlum		Ludlum		NA	
Probe Model:	43-68		44-3		43-37		43-68		NA	
Probe SN:	118629		023384		074969		118629		NA	
Probe Area (cm^2):	100		5		425		100		NA	
Next Cal. Date:	1/24/2004		1/29/2004		1/24/2004		1/24/2004		1/25/2004	
Background Surface Material	Air		Air		Floor Tile		Air		Air	
Background(c)-Time(Min):	3380	10	470	10	7464	10	3814	10	3	NA
CS Isotope - Activity(μCi):	C-14		Sr-90		C-14		C-14		NA	NA
CS Source(cpm) - 2σ Check	36971	Yes	199445	Yes	22776	Yes	36893	Yes	NA	NA
L_c, L_d (Counts)	43	88	16	35	64	130	46	94	NA	NA
Direct MDC C-14, Scan MDC C-14 (dpm/100cm^2)	442	3780	3488	17011	191	2160	469	4173	NA	NA
MDCR (With Background; cpm/100cm^2):	535		120		1038		590		NA	
Efficiency, Isotope:	20.0%	C-14	20.0%	I-125	16.0%	C-14	20.0%	C-14	NA	NA

Please See MARSSIM Chapter 6 for a more detailed explanation of equations.

Lc= Critical Detection Level
Ld= a priori Detection limit
MDC= Minimum Detectable Concentration
MDCR= Minimum Detectable Count Rate

$$\text{Direct MDC} = \frac{3+4.65*SQRT(B)}{T*\varepsilon_t*A*C}$$

$$\text{Scan MDC} = \frac{MDCR}{SQRT(E_{hf})*\varepsilon_t*\varepsilon_s*A*C}$$

$$MDCR = 1.38*(SQRT(B/(T*60)))*60+(B/T)$$

B = Background Counts
T = Counting Time In Minutes
ε_t = Total Detector Efficiency in Counts/Disintegration
A = Physical Probe Area in cm^2
C = Other Constants and Factors When Needed
E_{hf} = Human Factor Efficiency
ε_s = Source Efficiency

Survey Meter Information

Site: Incyte Genomics Building: 112 Lab/Room: 2

	Meter 6		Meter 7		Meter 8	Meter 9	Meter 10
Date:	8/27/2003		8/27/2003				
Make:	Ludlum		Ludlum				
Model:	2221		2221				
SN:	174947		108857				
Probe Make:	Ludlum		Ludlum				
Probe Model:	43-68		43-37				
Probe SN:	118629		074969				
Probe Area (cm^2):	100		425				
Next Cal. Date:	1/24/2004		1/24/2004				
Background Surface Material	Linoleum		Linoleum				
Background(c)-Time(Min):	5170	10	11120	10			
Isotope - Activity(μCi):	C-14		C-14				
Source(cpm) - 2σ Check	36893	Yes	22776	Yes			
L_c, L_d (Counts)	53	109	78	158			
Direct MDC C-14, Scan MDC C-14 (dpm/100cm^2)	544	5374	232	3054			
MDCR (With Background; cpm/100cm^2):	760		1468				
Efficiency, Isotope:	20.0%	C-14	16.0%	C-14			

Please See MARSSIM Chapter 6 for a more detailed explanation of equations.

Lc= Critical Detection Level
Ld= a priori Detection limit
MDC= Minimum Detectable Concentration
MDCR= Minimum Detectable Count Rate

Direct MDC= $\frac{3+4.65*SQRT(B)}{T*\varepsilon_t*A*C}$

Scan MDC= $\frac{MDCR}{SQRT(E_{hf})*\varepsilon_t*\varepsilon_s*A*C}$

MDCR= 1.38*(SQRT(B/(T*60)))*60+(B/T)

B = Background Counts
T = Counting Time In Minutes
ε_t = Total Detector Efficiency in Counts/Disintegration
A = Physical Probe Area in cm^2
C = Other Constants and Factors When Needed
E_{hf} = Human Factor Efficiency
ε_s = Source Efficiency

Radiological Decommissioning Survey	Incyte Genomics 1090 Elkton Rd	RSO, Inc. Building: 112 / Room: 2 / Lab Type:

Surveyors	Name: Walter Wiencek	Name: Paul Madairy	Date: 8/6/2003
Contact	Name: John Nicholson	Phone No.: 1-302-275-2550	

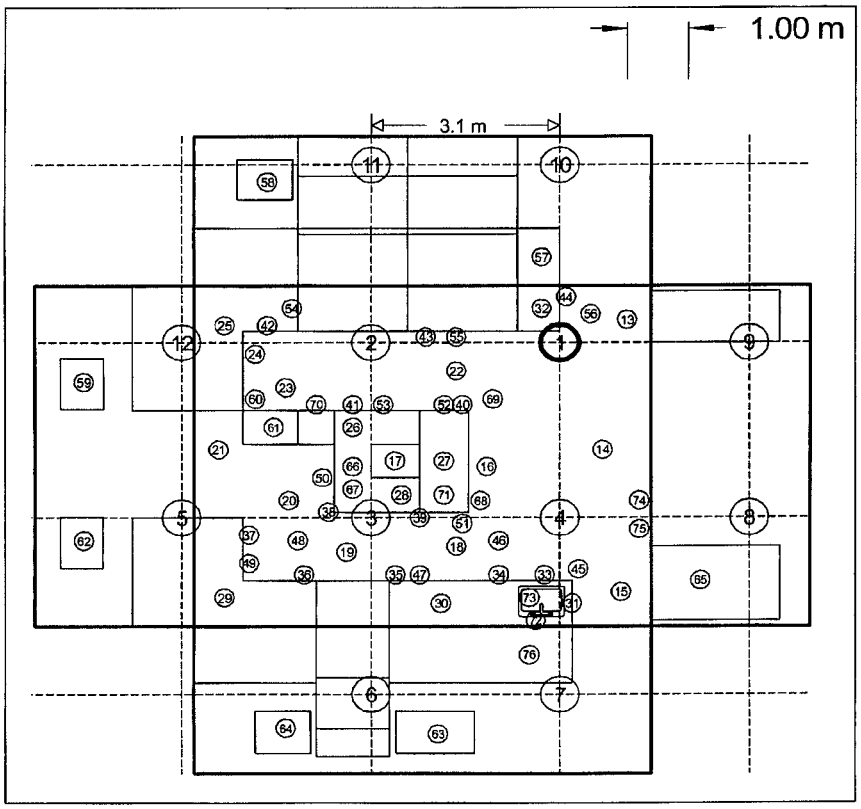

Isotopes And Wipe Results				
3-H	x		125-I	x
14-C	x		Other	
35-S			Other	
32-P			Other	
33-P	x		Other	

Total Wipes: 62

Wipe Results All <200 dpm/ 100 cm^2?

Yes	X	No	

If No

Wipe No.	Result in dpm / 100 cm^2

Please mark "x" when completed.

x	1. Data sheet is completed with all appropriate data.
x	2. The meter sheet contains all of the meters used for this survey with all of their efficiencies, MDC's, & MDCR's.
x	3. The above map is clear and accurate with all wipe locations marked with a circled number.
x	4. The wipe results are attached with all results less than release criteria. If no please explain in the remarks section.
x	5. All direct measurements are less than the MDCR or less than the release criteria (If above MDCR).
x	6. Exposure is measured using an appropriate meter and the result is less than the release criteria with the location clearly marked on the map.

Signature: Paul Madairy

Remarks:

Site: Incyte Genomics Building: 112 Lab/Room: 2

Start Date: 08/06/03 Finish Date: 08/07/03

Surveyor: Walter Wiencek Surveyor: Paul Madairy

Fume Hood Survey Results			*Wipe Test*		*β Direct*			*β Scan*					*γ Scan*				x-Rate
Wipe Number	Surface	Location	β dpm/100 cm²	I-125 dpm/100 cm²	Survey Meter #	Gross cpm/100 cm²	dpm/100 cm² C-14	Survey Meter #	Grid No.	High cpm/100 cm²	Average cpm/100 cm²	Average dpm/100 cm² C-14	Survey Meter #	High cpm	Avg cpm	Average dpm/100 cm² I-125	Gross µRem/hr
1	Corian	Inside Bottom	<100	<100	1	435	<MDCR	1		487	451	<MDCR	2	100	60	<MDCR	6
2	Corian	Inside Bottom	<100	<100	1	437	<MDCR	1		505	478	<MDCR	2	100	60	<MDCR	
3	Corian	Inside Left	<100	<100	1	394	<MDCR	1		468	413	<MDCR	2	100	60	<MDCR	
4	Corian	Inside Right	<100	<100	1	422	<MDCR	1		476	418	<MDCR	2	100	60	<MDCR	
5	Corian	Top / Vent L	<100	<100	1	462	<MDCR	1		510	457	<MDCR	2	100	60	<MDCR	4
6	Corian	Top / Vent R	<100	<100	1	559	983	1		630	532	<MDCR	2	100	60	<MDCR	
7	Corian	Back	<100	<100	1	367	<MDCR	1		488	412	<MDCR	2	100	60	<MDCR	
8	Metal	Lip	<100	<100	1	418	<MDCR	1		459	413	<MDCR	2	100	60	<MDCR	
9	Glass	Sashe	<100	<100	1	436	<MDCR	1		520	476	<MDCR	2	100	60	<MDCR	
10	Metal	Top Outside	<100	<100	1	429	<MDCR	1		489	437	<MDCR	2	100	60	<MDCR	
11	Corian	Drain Swab	<100	<100	1	498	<MDCR						2	100	60	<MDCR	4
6	Post Decon	Top / Vent R	<100	<100	1	443	<MDCR	1		487	423	<MDCR	2	100	60	<MDCR	

Radiological Decommissioning Survey	Incyte Genomics 1090 Elkton Rd	RSO, Inc.		
		Building 112	Room 2	Lab Type

Surveyors	Name: Walter Wiencek	Name Paul Madairy	Date 8/6/2003
Contact	Name: John Nicholson	Phone No. 1-302-275-2550	

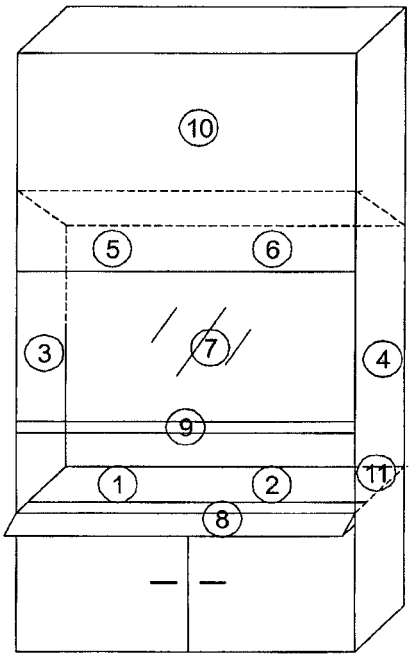

Total Wipes: 11			
Wipe Results All <300 dpm/ 100 cm^2?			
Yes	X	No	

If No Wipe No.	Result in dpm / 100 cm^2

Please use an "x" for completed.

X	1. Data sheet is completed with all appropriate data.
X	2. The meter sheet contains all of the meters used for this survey with all of their efficiencies, MDC's, & MDCR's.
X	3. The above map is clear and accurate with all wipe locations marked with a circled number.
X	4. The wipe results are attached with all results less than release criteria. If no please explain in the remarks section.
X	5. All direct measurements are less than the MDCR or less than the release criteria (If above MDCR).
X	6. Exposure is measured using an appropriate meter and the result is less than the release criteria with the location clearly marked on the map.

Signature: Paul Madairy

Remarks:

Site: Incyte Genomics Building: 112 Lab/Room: 2

Start Date: 08/06/03 Finish Date: 08/07/03

Surveyor: Walter Wiencek Surveyor: Paul Madairy

Bio Hood Survey Results			*Wipe Test*		*β Direct*			*β Scan*					*γ Scan*				x-Rate
Wipe Number	Surface	Location	β dpm/100 cm²	I-125 dpm/100 cm²	Survey Meter #	Gross cpm/100 cm²	dpm/100 cm² C-14	Survey Meter #	Grid No.	High cpm/100 cm²	Average cpm/100 cm²	Average dpm/100 cm² C-14	Survey Meter #	High cpm	Avg cpm	Average dpm/100 cm² I-125	Gross µRem/ hr
FMS 2																	
1	Metal	Inside Bottom	<100	<100	1	474	<MDCR	1		520	457	<MDCR	2	100	80	<MDCR	4
2	Metal	Inside Bottom	<100	<100	1	436	<MDCR	1		478	445	<MDCR	2	100	80	<MDCR	
3	Metal	Inside Left	<100	<100	1	427	<MDCR	1		496	432	<MDCR	2	100	80	<MDCR	
4	Metal	Inside Right	<100	<100	1	373	<MDCR	1		512	382	<MDCR	2	100	80	<MDCR	
5	Metal	Inside Top	<100	<100	1	458	<MDCR	1		516	447	<MDCR	2	100	80	<MDCR	3
6	Metal	Inside Top	<100	<100	1	394	<MDCR	1		470	404	<MDCR	2	100	80	<MDCR	
7	Metal	Inside Back	<100	<100	1	430	<MDCR	1		484	430	<MDCR	2	100	80	<MDCR	
8	Metal	Apron	<100	<100	1	429	<MDCR	1		495	448	<MDCR	2	100	80	<MDCR	
9	Glass	Sashe	<100	<100	1	394	<MDCR	1		451	418	<MDCR	2	100	80	<MDCR	
10	Metal	Outside Front	<100	<100	1	374	<MDCR	1		405	382	<MDCR	2	100	80	<MDCR	
11	Metal	Swab	<100	<100	1	448	<MDCR						2	100	80	<MDCR	3
FMS 3																	
1	Metal	Inside Bottom	<100	<100	1	458	<MDCR	1		548	467	<MDCR	2	100	80	<MDCR	4
2	Metal	Inside Bottom	<100	<100	1	421	<MDCR	1		542	432	<MDCR	2	100	80	<MDCR	
3	Metal	Inside Left	<100	<100	1	382	<MDCR	1		407	381	<MDCR	2	100	80	<MDCR	
4	Metal	Inside Right	<100	<100	1	414	<MDCR	1		447	431	<MDCR	2	100	80	<MDCR	
5	Metal	Inside Top	<100	<100	1	500	<MDCR	1		532	468	<MDCR	2	100	80	<MDCR	4
6	Metal	Inside Top	<100	<100	1	468	<MDCR	1		573	497	<MDCR	2	100	80	<MDCR	
7	Metal	Inside Back	<100	<100	1	367	<MDCR	1		406	389	<MDCR	2	100	80	<MDCR	
8	Metal	Apron	<100	<100	1	435	<MDCR	1		528	447	<MDCR	2	100	80	<MDCR	
9	Glass	Sashe	<100	<100	1	383	<MDCR	1		407	375	<MDCR	2	100	80	<MDCR	
10	Metal	Outside Front	<100	<100	1	356	<MDCR	1		448	393	<MDCR	2	100	80	<MDCR	
11	Metal	Swab	<100	<100	1	370	<MDCR						2	100	80	<MDCR	4

Radiological Decommissioning Survey	Incyte Genomics 1090 Elkton Rd	RSO, Inc.		
		Building 112	Room 2	Lab Type

Surveyors	Name: Walter Wiencek	Name Paul Madairy	Date 8/6/2003
Contact	Name: John Nicholson	Phone No. 1-302-275-2550	Bio Hood 1

FMS 24

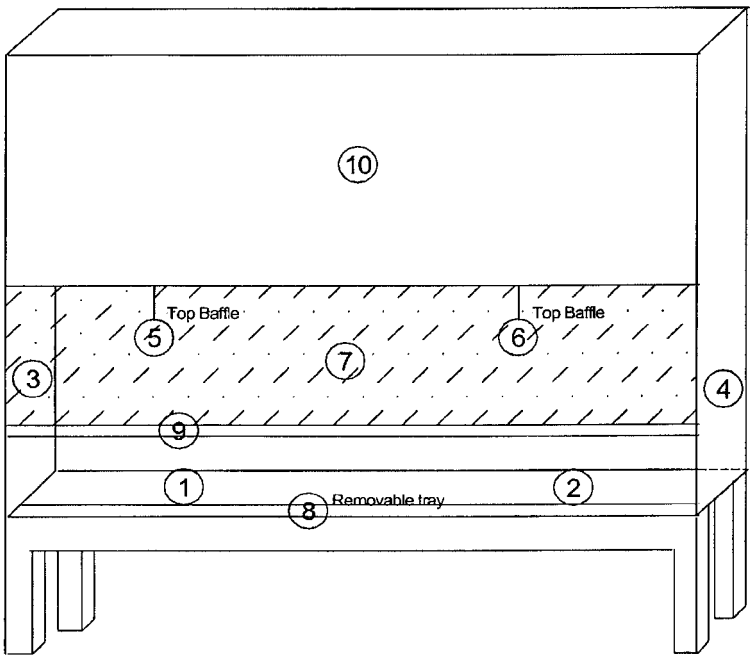

Total Wipes: 11			
Wipe Results All <300 dpm/ 100 cm²?			
Yes	X	No	
If No			
Wipe No.	Result in dpm / 100 cm²		

Please use an "x" for completed.

x	1. Data sheet is completed with all appropriate data.
x	2. The meter sheet contains all of the meters used for this survey with all of their efficiencies, MDC's, & MDCR's.
x	3. The above map is clear and accurate with all wipe locations marked with a circled number.
x	4. The wipe results are attached with all results less than release criteria. If no please explain in the remarks section.
x	5. All direct measurements are less than the MDCR or less than the release criteria (If above MDCR).
x	6. Exposure is measured using an appropriate meter and the result is less than the release criteria with the location clearly marked on the map.

Signature: Paul Madairy

Remarks:

Radiological Decommissioning Survey	Incyte Genomics 1090 Elkton Rd	RSO, Inc.		
		Building 112	Room 2	Lab Type

Surveyors	Name: Walter Wiencek	Name Paul Madairy	Date 8/6/2003
Contact	Name: John Nicholson	Phone No. 1-302-275-2550	Bio Hood 2

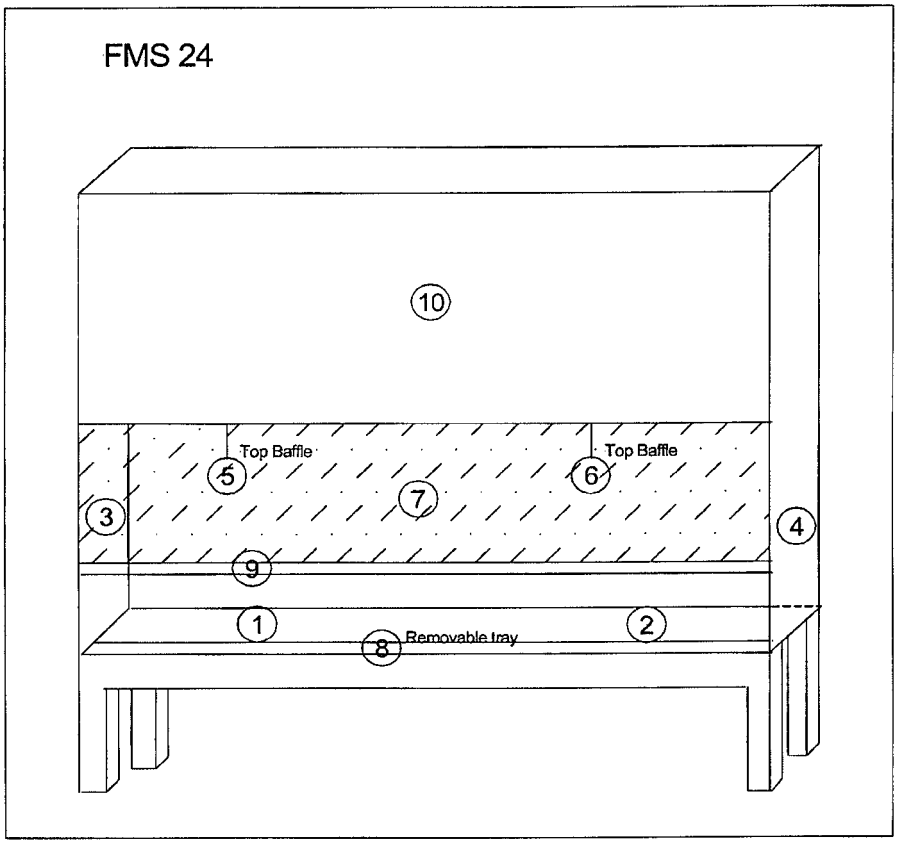

Total Wipes: 11			
Wipe Results All <300 dpm/ 100 cm^2?			
Yes	X	No	
If No			
Wipe No.	Result in dpm / 100 cm^2		

Please use an "x" for completed.

x	1. Data sheet is completed with all appropriate data.
x	2. The meter sheet contains all of the meters used for this survey with all of their efficiencies, MDC's, & MDCR's.
x	3. The above map is clear and accurate with all wipe locations marked with a circled number.
x	4. The wipe results are attached with all results less than release criteria. If no please explain in the remarks section.
x	5. All direct measurements are less than the MDCR or less than the release criteria (If above MDCR).
x	6. Exposure is measured using an appropriate meter and the result is less than the release criteria with the location clearly marked on the map.

Signature: Paul Madairy

Remarks:

Site: Incyte Genomics Building: 112 Lab/Room: 28

Start Date: 09/04/03 Finish Date: 09/05/03

Surveyor: Walter Wiencek Surveyor: Paul Madairy

Area Survey Results			*Wipe Test*		*β Direct*			*β Scan*					*γ Scan*				x-Rate
Wipe Number	Surface	Location	β dpm/100 cm^2	I-125 dpm/100 cm^2	Survey Meter #	Gross cpm/100 cm^2	dpm/100 cm^2 C-14	Survey Meter #	Grid No.	High cpm/100 cm^2	Average cpm/100 cm^2	Average dpm/100 cm^2 C-14	Survey Meter #	High cpm	Avg cpm	Average dpm/100 cm^2 I-125	Gross µRem/hr
1	Tile	Floor	<100	<100	6	358	<MDCR	3		1047	993	<MDCR					4
2	Tile	Floor	<100	<100	6	415	<MDCR	3		1129	1087	<MDCR					
3	Tile	Floor	<100	<100	6	372	<MDCR	3		1096	1007	<MDCR					
4	Tile	Floor	<100	<100	6	347	<MDCR	3		1034	929	<MDCR					
5	Metal	Hood	<100	<100	6	351	<MDCR	6		371	345	<MDCR					3
6	Drywall	Wall	<100	<100	6	288	<MDCR	6		328	287	<MDCR					
7	Drywall	Wall	<100	<100	6	342	<MDCR	6		373	340	<MDCR					
8	Metal	Door	<100	<100	6	364	<MDCR	6		397	358	<MDCR					
9	Drywall	Wall	<100	<100	6	319	<MDCR	6		355	326	<MDCR					
10	Metal	Hood	<100	<100	6	302	<MDCR	6		344	307	<MDCR					3
11	Drywall	Wall	<100	<100	6	339	<MDCR	6		401	349	<MDCR					
12	Drywall	Wall	<100	<100	6	350	<MDCR	3		403	537	<MDCR					
13	Tile	Floor	<100	<100	6	388	<MDCR	3		1064	989	<MDCR					
14	Tile	Floor	<100	<100	6	417	<MDCR	3		1124	1061	<MDCR					
15	Tile	Floor	<100	<100	6	392	<MDCR	3		1281	1061	<MDCR					4
16	Tile	Floor	<100	<100	6	416	<MDCR	3		1193	1101	<MDCR					
17	Tile	Floor	<100	<100	6	386	<MDCR	3		1307	1097	<MDCR					
18	Tile	Floor	<100	<100	6	386	<MDCR	3		1199	1002	<MDCR					4
19	Tile	Floor	<100	<100	6	348	<MDCR	3		1087	943	<MDCR					
20	Tile	Floor	<100	<100	6	403	<MDCR	3		1099	1006	<MDCR					
21	Tile	Floor	<100	<100	6	334	<MDCR	3		*999	879	<MDCR					
22	Tile	Floor	<100	<100	6	398	<MDCR	3		1009	963	<MDCR					4
23	Corian	Benchtop	<100	<100	6	389	<MDCR	6		437	378	<MDCR					
24	Corian	Benchtop	<100	<100	6	415	<MDCR	6		487	361	<MDCR					
25	Corian	Benchtop	<100	<100	6	358	<MDCR	6		373	331	<MDCR					
26	Corian	Benchtop	<100	<100	6	346	<MDCR	6		462	355	<MDCR					
27	Corian	Benchtop	<100	<100	6	349	<MDCR	6		454	375	<MDCR					
28	Corian	Benchtop	<100	<100	6	398	<MDCR	6		400	358	<MDCR					
29	Corian	Benchtop	<100	<100	6	394	<MDCR	6		432	408	<MDCR					3
30	Metal	Outside Drawers	<100	<100	6	295	<MDCR	6		345	305	<MDCR					

Site: Incyte Genomics Building: 112 Lab/Room: 28

Start Date: 09/04/03 Finish Date: 09/05/03

Surveyor: Walter Wiencek Surveyor: Paul Madairy

Area Survey Results			*Wipe Test*		*β Direct*			*β Scan*					*γ Scan*				x-Rate
Wipe Number	Surface	Location	β dpm/100 cm^2	I-125 dpm/100 cm^2	Survey Meter #	Gross cpm/100 cm^2	dpm/100 cm^2 C-14	Survey Meter #	Grid No.	High cpm/100 cm^2	Average cpm/100 cm^2	Average dpm/100 cm^2 C-14	Survey Meter #	High cpm	Avg cpm	Average dpm/100 cm^2 I-125	Gross µRem/ hr
31	Metal	Outside Drawers	<100	<100	6	303	<MDCR	6		354	299	<MDCR					4
32	Metal	Outside Drawers	<100	<100	6	312	<MDCR	6		331	297	<MDCR					
33	Metal	Outside Drawers	<100	<100	6	302	<MDCR	6		376	332	<MDCR					
34	Metal	Outside Drawers	<100	<100	6	300	<MDCR	6		328	303	<MDCR					
35	Metal	Outside Drawers	<100	<100	6	350	<MDCR	6		377	346	<MDCR					
36	Metal	Outside Drawers	<100	<100	6	288	<MDCR	6		312	289	<MDCR					3
37	Metal	Outside Drawers	<100	<100	6	305	<MDCR	6		364	304	<MDCR					
38	Metal	Outside Drawers	<100	<100	6	290	<MDCR	6		354	307	<MDCR					
39	Metal	Outside Drawers	<100	<100	6	351	<MDCR	6		393	329	<MDCR					
40	Metal	Cabinet	<100	<100	6	267	<MDCR	6		345	301	<MDCR					
41	Metal	Inside Drawers	<100	<100	6	350	<MDCR	6		383	329	<MDCR					3
42	Metal	Inside Drawers	<100	<100	6	366	<MDCR	6		395	359	<MDCR					
43	Metal	Inside Drawers	<100	<100	6	365	<MDCR	6		399	348	<MDCR					
44	Metal	Inside Drawers	<100	<100	6	394	<MDCR	6		398	343	<MDCR					
45	Metal	Inside Drawers	<100	<100	6	344	<MDCR	6		375	336	<MDCR					
46	Metal	Inside Drawers	<100	<100	6	388	<MDCR	6		439	387	<MDCR					
47	Metal	Inside Drawers	<100	<100	6	333	<MDCR	6		366	318	<MDCR					4
48	Metal	Inside Drawers	<100	<100	6	398	<MDCR	6		399	391	<MDCR					
49	Rock Board	Inside Drawers	<100	<100	6	368	<MDCR	6		414	356	<MDCR					
50	Rock Board	Inside Drawers	<100	<100	6	427	<MDCR	6		528	472	<MDCR					
51	Metal	Inside Drawers	<100	<100	6	387	<MDCR	6		402	376	<MDCR					
52	Metal	Cabinet	<100	<100	6	434	<MDCR	6		479	437	<MDCR					3
53	Metal	Cabinet	<100	<100	6	350	<MDCR	6		398	341	<MDCR					
54	Metal	Cabinet	<100	<100	6	393	<MDCR	6		403	361	<MDCR					
55	Metal	Cabinet	<100	<100	6	396	<MDCR	6		415	389	<MDCR					
56	Metal	Cabinet	<100	<100	6	344	<MDCR	6		414	339	<MDCR					
57	Metal	Cabinet	<100	<100	6	352	<MDCR	6		379	340	<MDCR					3
58	Corian	Shelves	<100	<100	6	352	<MDCR	6		412	363	<MDCR					
59	Corian	Shelves	<100	<100	6	345	<MDCR	6		360	324	<MDCR					
60	Metal	Door	<100	<100	6	312	<MDCR	6		371	325	<MDCR					

Site: Incyte Genomics Building: 112 Lab/Room: 28

Start Date: 09/04/03 Finish Date: 09/05/03

Surveyor: Walter Wiencek Surveyor: Paul Madairy

Area Survey Results			*Wipe Test*		*β Direct*			*β Scan*					*γ Scan*				x-Rate
Wipe Number	Surface	Location	β dpm/100 cm^2	I-125 dpm/100 cm^2	Survey Meter #	Gross cpm/100 cm^2	dpm/100 cm^2 C-14	Survey Meter #	Grid No.	High cpm/100 cm^2	Average cpm/100 cm^2	Average dpm/100 cm^2 C-14	Survey Meter #	High cpm	Avg cpm	Average dpm/100 cm^2 I-125	Gross µRem/ hr
61	Metal	Sink	<100	<100	6	354	<MDCR	6		405	363	<MDCR					
62	Metal	Sink	<100	<100	6	361	<MDCR	6		NA	NA	NA					4
63	Metal	Ceiling Vents	<100	<100	6	412	<MDCR	6		451	403	<MDCR					
64	Metal	Ceiling Vents	<100	<100	6	418	<MDCR	6		435	402	<MDCR					4
65	Metal	Ceiling Vents	<100	<100	6	424	<MDCR	6		438	407	<MDCR					
66	Metal	Ceiling Vents	<100	<100	6	337	<MDCR	6		355	330	<MDCR					
67	PVC	Ceiling Vents	<100	<100	6	324	<MDCR	6		NA	NA	NA					3
68	Metal	Ceiling Pipe	<100	<100	6	390	<MDCR	6		391	413	<MDCR					
69	Metal	Pipe	<100	<100	6	384	<MDCR	6		372	422	<MDCR					

Survey Meter Information

Site: Incyte Genomics Building: 112 Lab/Room: 28

	Meter 1		Meter 2		Meter 3		Meter 4		Meter 5	
Date:	9/4/2003		9/4/2003		9/4/2003		9/4/2003		9/4/2003	
Make:	Ludlum		Ludlum		Ludlum		Ludlum		Bicron	
Model:	2221		2221		2221		2221		MicroRem	
SN:	174947		174947		108857		108857		B694G	
Probe Make:	Ludlum		Ludlum		Ludlum		Ludlum		NA	
Probe Model:	43-68		43-68		43-37		43-37		NA	
Probe SN:	118629		118629		074969		074969		NA	
Probe Area (cm^2):	100		100		425		425		NA	
Next Cal. Date:	1/24/2004		1/24/2004		1/24/2004		1/24/2004		1/25/2004	
Background Surface Material	Air		Carpet		Tile		Carpet		Air	
Background(c)-Time(Min):	4406	10	4892	10	8899	10	8123	10	3 uRem/hr	NA
CS Isotope - Activity(μCi):	C-14	NA	C-14	NA	C-14	NA	C-14	NA	NA	NA
CS Source(cpm) - 2σ Check	37053	Yes	37053	Yes	23039	Yes	37053	Yes	NA	NA
L_c, L_d (Counts)	49	101	52	106	70	142	66	136	NA	NA
Direct MDC C-14, Scan MDC C-14 (dpm/100cm^2)	503	4702	529	12827	167	2011	159	4646	NA	NA
MDCR (With Background; cpm/100cm^2):	665		726		1209		1117		NA	
Efficiency, Isotope:	20.0%	C-14	20.0%	C-14	20.0%	C-14	20.0%	C-14	NA	NA

Please See MARSSIM Chapter 6 for a more detailed explanation of equations.

Lc= Critical Detection Level
Ld= a priori Detection limit
MDC= Minimum Detectable Concentration
MDCR= Minimum Detectable Count Rate

$$\text{Direct MDC} = \frac{3+4.65*SQRT(B)}{T*\varepsilon_t*A*C}$$

$$\text{Scan MDC} = \frac{MDCR}{SQRT(E_{hf})*\varepsilon_t*\varepsilon_s*A*C}$$

$$MDCR = 1.38*(SQRT(B/(T*60)))*60+(B/T)$$

B = Background Counts
T = Counting Time In Minutes
ε_t = Total Detector Efficiency in Counts/Disintegration
A = Physical Probe Area in cm^2
C = Other Constants and Factors When Needed
E_{hf} = Human Factor Efficiency
ε_s = Source Efficiency

Survey Meter Information

Site: Incyte Genomics Building: 112 Lab/Room: 28

	Meter 6		Meter 7	Meter 8	Meter 9	Meter 10
Date:	9/5/2003					
Make:	Ludlum					
Model:	2221					
SN:	174947					
Probe Make:	Ludlum					
Probe Model:	43-68					
Probe SN:	118629					
Probe Area (cm^2):	100					
Next Cal. Date:	1/24/2004					
Background Surface Material	Air					
Background(c)-Time(Min):	3400	10				
Isotope - Activity(µCi):	C-14	NA				
Source(cpm) - 2σ Check	37402	Yes				
L_c, L_d (Counts)	43	89				
Direct MDC C-14, Scan MDC C-14 (dpm/100cm^2)	444	3798				
MDCR (With Background; cpm/100cm^2):	537					
Efficiency, Isotope:	20.0%	C-14				

Please See MARSSIM Chapter 6 for a more detailed explanation of equations.

Lc= Critical Detection Level
Ld= a priori Detection limit
MDC= Minimum Detectable Concentration
MDCR= Minimum Detectable Count Rate

Direct MDC= $\frac{3+4.65*SQRT(B)}{T*\varepsilon_t*A*C}$

Scan MDC= $\frac{MDCR}{SQRT(E_{hf})*\varepsilon_t*\varepsilon_s*A*C}$

MDCR= 1.38*(SQRT(B/(T*60)))*60+(B/T)

B = Background Counts
T = Counting Time In Minutes
ε_t = Total Detector Efficiency in Counts/Disintegration
A = Physical Probe Area in cm^2
C = Other Constants and Factors When Needed
E_{hf} = Human Factor Efficiency
ε_s = Source Efficiency

Radiological Decommissioning Survey	Incyte Genomics 1090 Elkton Rd	RSO, Inc. Building: 112 / Room: 28 / Lab Type:

Surveyors	Name: Walter Wiencek	Name: Paul Madairy	Date: 9/4/2003
Contact	Name: John Nicholson	Phone No.: 1-302-275-2550	

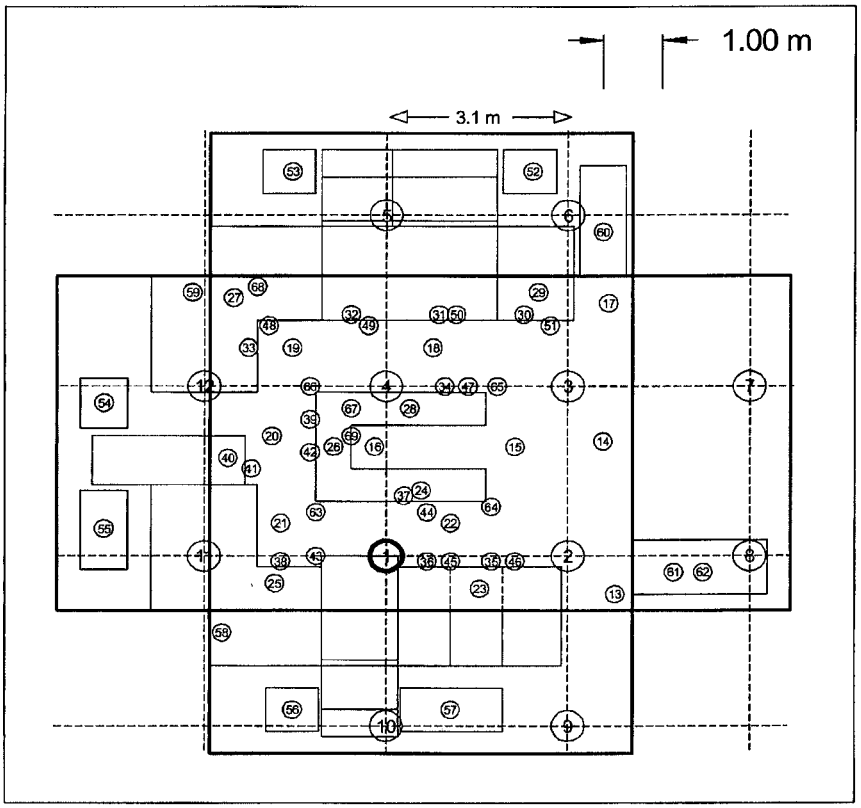

Isotopes And Wipe Results				
3-H	X		125-I	
14-C	X		Other	
35-S			Other	
32-P			Other	
33-P	X		Other	

Total Wipes: 69

Wipe Results All <200 dpm/ 100 cm^2?

Yes	X	No	

If No

Wipe No.	Result in dpm / 100 cm^2

Please mark "x" when completed.

x	1. Data sheet is completed with all appropriate data.
x	2. The meter sheet contains all of the meters used for this survey with all of their efficiencies, MDC's, & MDCR's.
x	3. The above map is clear and accurate with all wipe locations marked with a circled number.
x	4. The wipe results are attached with all results less than release criteria. If no please explain in the remarks section.
x	5. All direct measurements are less than the MDCR or less than the release criteria (If above MDCR).
x	6. Exposure is measured using an appropriate meter and the result is less than the release criteria with the location clearly marked on the map.

Signature: Paul Madairy

Remarks:

Site: Incyte Genomics Building: 112 Lab/Room: 28

Start Date: 09/04/03 Finish Date: 09/05/03

Surveyor: Walter Wiencek Surveyor: Paul Madairy

Fume Hood Survey Results			*Wipe Test*		*β Direct*			*β Scan*					*γ Scan*				x-Rate
Wipe Number	Surface	Location	β dpm/100 cm²	I-125 dpm/100 cm²	Survey Meter #	Gross cpm/100 cm²	dpm/100 cm² C-14	Survey Meter #	Grid No.	High cpm/100 cm²	Average cpm/100 cm²	Average dpm/100 cm² C-14	Survey Meter #	High cpm	Avg cpm	Average dpm/100 cm² I-125	Gross µRem/hr
FMS 35																	
1	Corian	Inside Bottom	<100	<100	6	368	<MDCR	6		395	355	<MDCR					3
2	Corian	Inside Bottom	<100	<100	6	444	<MDCR	6		469	428	<MDCR					
3	Corian	Inside Left	<100	<100	6	353	<MDCR	6		425	341	<MDCR					
4	Corian	Inside Right	<100	<100	6	364	<MDCR	6		407	363	<MDCR					
5	Corian	Inside Top	<100	<100	6	371	<MDCR	6		429	359	<MDCR					
6	Corian	Inside Top	<100	<100	6	401	<MDCR	6		506	420	<MDCR					
7	Corian	Inside Back	<100	<100	6	323	<MDCR	6		429	330	<MDCR					
8	Metal	Aprin	<100	<100	6	329	<MDCR	6		411	344	<MDCR					
9	Glass	Sashe	<100	<100	6	307	<MDCR	6		332	302	<MDCR					
10	Metal	Outside Front	<100	<100	6	348	<MDCR	6		369	342	<MDCR					
11	Corian	Swab	<100	<100	6	392	<MDCR	6		NA	NA	NA					4
FMS 36																	
1	Corian	Inside Bottom	<100	<100	6	356	<MDCR	6		408	341	<MDCR					4
2	Corian	Inside Bottom	<100	<100	6	399	<MDCR	6		430	404	<MDCR					
3	Corian	Inside Left	<100	<100	6	285	<MDCR	6		380	303	<MDCR					
4	Corian	Inside Right	<100	<100	6	272	<MDCR	6		338	288	<MDCR					
5	Corian	Inside Top	<100	<100	6	327	<MDCR	6		342	312	<MDCR					
6	Corian	Inside Top	<100	<100	6	400	<MDCR	6		454	365	<MDCR					
7	Corian	Inside Back	<100	<100	6	410	<MDCR	6		450	413	<MDCR					
8	Metal	Aprin	<100	<100	6	338	<MDCR	6		435	335	<MDCR					
9	Glass	Sashe	<100	<100	6	310	<MDCR	6		325	301	<MDCR					
10	Metal	Outside Front	<100	<100	6	293	<MDCR	6		361	318	<MDCR					
11	Corian	Swab	<100	<100	6	372	<MDCR	6		NA	NA	NA					4

Radiological Decommissioning Survey	Incyte Genomics 1090 Elkton Rd	RSO, Inc. Building: 112 / Room: 28 / Lab Type:

Surveyors	Name: Walter Wiencek	Name: Paul Madairy	Date: 9/4/2003
Contact	Name: John Nicholson	Phone No.: 1-302-275-2550	

FMS 25

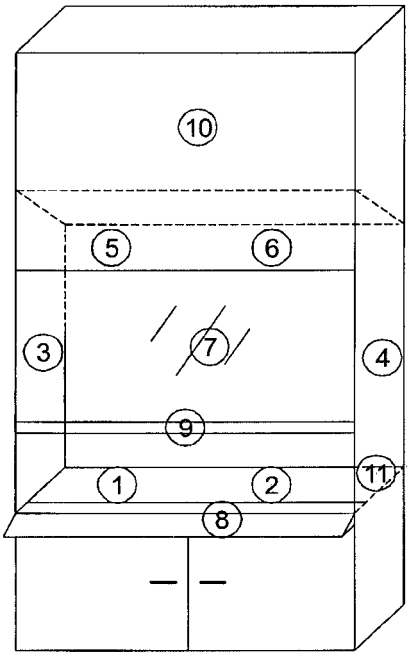

Total Wipes: 10

Wipe Results All <300 dpm/ 100 cm²?

Yes	X	No	

If No

Wipe No.	Result in dpm / 100 cm²

Please use an "x" for completed.

X	1. Data sheet is completed with all appropriate data.
X	2. The meter sheet contains all of the meters used for this survey with all of their efficiencies, MDC's, & MDCR's.
X	3. The above map is clear and accurate with all wipe locations marked with a circled number.
X	4. The wipe results are attached with all results less than release criteria. If no please explain in the remarks section.
X	5. All direct measurements are less than the MDCR or less than the release criteria (If above MDCR).
X	6. Exposure is measured using an appropriate meter and the result is less than the release criteria with the location clearly marked on the map.

Signature: Paul Madairy

Remarks:

Radiological Decommissioning Survey	Incyte Genomics 1090 Elkton Rd	RSO, Inc. Building: 112 / Room: 28 / Lab Type:

Surveyors	Name: Walter Wiencek	Name: Paul Madairy	Date: 9/4/2003
Contact	Name: John Nicholson	Phone No.: 1-302-275-2550	

FMS 26

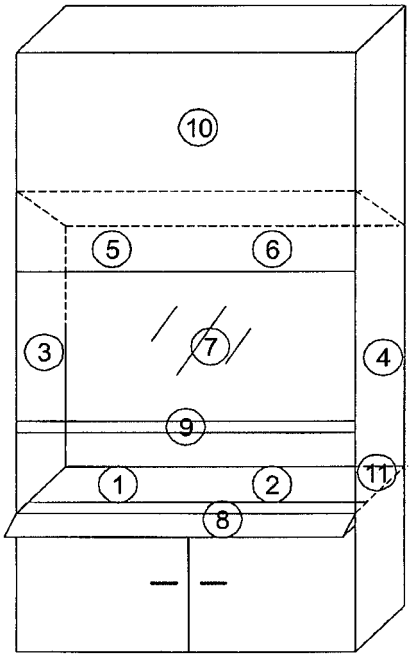

Total Wipes: 10

Wipe Results All <300 dpm/ 100 cm^2?

Yes	X	No	

If No

Wipe No.	Result in dpm / 100 cm^2

Please use an "x" for completed.

X	1. Data sheet is completed with all appropriate data.
X	2. The meter sheet contains all of the meters used for this survey with all of their efficiencies, MDC's, & MDCR's.
X	3. The above map is clear and accurate with all wipe locations marked with a circled number.
X	4. The wipe results are attached with all results less than release criteria. If no please explain in the remarks section.
X	5. All direct measurements are less than the MDCR or less than the release criteria (If above MDCR).
X	6. Exposure is measured using an appropriate meter and the result is less than the release criteria with the location clearly marked on the map.

Signature: Paul Madairy

Remarks:

Site: Incyte Genomics Building: 112 Lab/Room: 28

Start Date: 09/04/03 Finish Date: 09/05/03

Surveyor: Walter Wiencek Surveyor: Paul Madairy

Bio Hood Survey Results			*Wipe Test*		*β Direct*			*β Scan*					*γ Scan*				x-Rate
Wipe Number	Surface	Location	β dpm/100 cm^2	I-125 dpm/100 cm^2	Survey Meter #	Gross cpm/100 cm^2	dpm/100 cm^2 C-14	Survey Meter #	Grid No.	High cpm/100 cm^2	Average cpm/100 cm^2	Average dpm/100 cm^2 C-14	Survey Meter #	High cpm	Avg cpm	Average dpm/100 cm^2 I-125	Gross µRem/ hr
1	Metal	Inside Bottom	<100	<100	6	334	<MDCR	6		360	321	<MDCR					3
2	Metal	Inside Bottom	<100	<100	6	343	<MDCR	6		378	328	<MDCR					
3	Metal	Inside Left	<100	<100	6	298	<MDCR	6		359	310	<MDCR					
4	Metal	Inside Right	<100	<100	6	266	<MDCR	6		350	285	<MDCR					
5	Metal	Inside Top	<100	<100	6	348	<MDCR	6		369	238	<MDCR					
6	Metal	Inside Top	<100	<100	6	353	<MDCR	6		373	349	<MDCR					
7	Metal	Inside Back	<100	<100	6	325	<MDCR	6		360	328	<MDCR					
8	Metal	Aprin	<100	<100	6	362	<MDCR	6		405	353	<MDCR					
9	Glass	Sashe	<100	<100	6	309	<MDCR	6		390	314	<MDCR					
10	Metal	Outside Front	<100	<100	6	302	<MDCR	6		344	307	<MDCR					
11	Metal	Swab	<100	<100	6	350	<MDCR	6		NA	NA	NA					4

Radiological Decommissioning Survey	Incyte Genomics 1090 Elkton Rd	RSO, Inc.		
		Building 112	Room 28	Lab Type

Surveyors	Name: Walter Wiencek	Name Paul Madairy	Date 9/4/2003
Contact	Name: John Nicholson	Phone No. 1-302-275-2550	

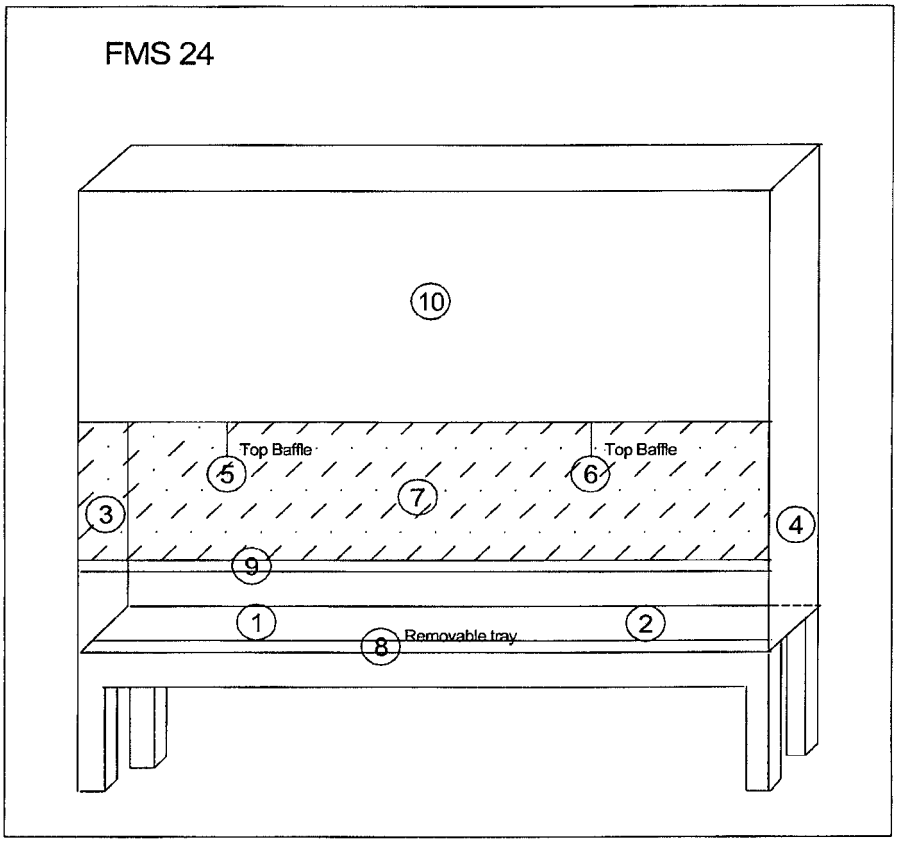

Total Wipes: 10			
Wipe Results All <300 dpm/ 100 cm^2?			
Yes	X	No	
If No			
Wipe No.	Result in dpm / 100 cm^2		

Please use an "x" for completed.

x	1. Data sheet is completed with all appropriate data.
x	2. The meter sheet contains all of the meters used for this survey with all of their efficiencies, MDC's, & MDCR's.
x	3. The above map is clear and accurate with all wipe locations marked with a circled number.
x	4. The wipe results are attached with all results less than release criteria. If no please explain in the remarks section.
x	5. All direct measurements are less than the MDCR or less than the release criteria (If above MDCR).
x	6. Exposure is measured using an appropriate meter and the result is less than the release criteria with the location clearly marked on the map.

Signature: Paul Madairy

Remarks:

Site: Incyte Genomics Building: 112 Lab/Room: 28

Start Date: 09/04/03 Finish Date: 09/05/03

Surveyor: Walter Wiencek Surveyor: Paul Madairy

Equipment Survey Results			*Wipe Test*		*β Direct*			*β Scan*					*γ Scan*				x-Rate
Wipe Number	Surface	Location	β dpm/100 cm^2	I-125 dpm/100 cm^2	Survey Meter #	Gross cpm/100 cm^2	dpm/100 cm^2 C-14	Survey Meter #	Grid No.	High cpm/100 cm^2	Average cpm/100 cm^2	Average dpm/100 cm^2 C-14	Survey Meter #	High cpm	Avg cpm	Average dpm/100 cm^2 I-125	Gross µRem/hr

Site: Incyte Grnomics Building: 112 Lab/Room: 37

Start Date: 08/22/03 Finish Date: 08/25/03

Surveyor: Walter Wiencek Surveyor: Paul Madairy

Area Survey Results			*Wipe Test*		*β Direct*			*β Scan*					*γ Scan*				x-Rate
Wipe Number	Surface	Location	β dpm/100 cm²	I-125 dpm/100 cm²	Survey Meter #	Gross cpm/100 cm²	dpm/100 cm² C-14	Survey Meter #	Grid No.	High cpm/100 cm²	Average cpm/100 cm²	Average dpm/100 cm² C-14	Survey Meter #	High cpm	Avg cpm	Average dpm/100 cm² I-125	Gross µRem/hr
1	Floor Tile	Floor	<100	<100	1	310	<MDCR	3		1087	837	<MDCR					3
2	Floor Tile	Floor	<100	<100	1	347	<MDCR	3		1148	883	<MDCR					
3	Floor Tile	Floor	<100	<100	1	334	<MDCR	3		1002	809	<MDCR					2
4	Floor Tile	Floor	<100	<100	1	303	<MDCR	3		808	675	<MDCR					
5	Drywall	Wall	<100	<100	1	306	<MDCR	1		384	302	<MDCR					
6	Metal	Hood	<100	<100	1	256	<MDCR	1		355	285	<MDCR					
7	Drywall	Wall	<100	<100	1	291	<MDCR	1		347	307	<MDCR					
8	Drywall	Wall	<100	<100	1	326	<MDCR	1		370	317	<MDCR					
9	Glass	Hood	<100	<100	1	287	<MDCR	1		342	289	<MDCR					
10	Drywall	Wall	<100	<100	1	270	<MDCR	1		328	302	<MDCR					
11	Drywall	Wall	<100	<100	1	276	<MDCR	1		365	316	<MDCR					3
12	Drywall	Wall	<100	<100	1	347	<MDCR	1		368	311	<MDCR					
13	Floor Tile	Floor	<100	<100	1	364	<MDCR	3		1068	735	<MDCR					2
14	Floor Tile	Floor	<100	<100	1	307	<MDCR	3		1001	723	<MDCR					
15	Floor Tile	Floor	<100	<100	1	348	<MDCR	3		914	837	<MDCR					
16	Floor Tile	Floor	<100	<100	1	323	<MDCR	3		944	722	<MDCR					2
17	Floor Tile	Floor	<100	<100	1	362	<MDCR	3		924	854	<MDCR					
18	Floor Tile	Floor	<100	<100	1	385	<MDCR	3		997	772	<MDCR					3
19	Floor Tile	Floor	<100	<100	1	356	<MDCR	3		967	730	<MDCR					
20	Floor Tile	Floor	<100	<100	1	331	<MDCR	3		972	736	<MDCR					2
21	Corian	Benchtop	<100	<100	1	323	<MDCR	1		366	288	<MDCR					4
22	Corian	Benchtop	<100	<100	1	292	<MDCR	1		374	330	<MDCR					
23	Corian	Benchtop	<100	<100	1	320	<MDCR	1		379	308	<MDCR					
24	Corian	Benchtop	<100	<100	1	308	<MDCR	1		412	351	<MDCR					4
25	Corian	Benchtop	<100	<100	1	344	<MDCR	1		366	311	<MDCR					
26	Corian	Benchtop	<100	<100	1	349	<MDCR	1		363	321	<MDCR					3
27	Corian	Benchtop	<100	<100	1	363	<MDCR	1		366	324	<MDCR					
28	Corian	Benchtop	<100	<100	1	340	<MDCR	1		426	377	<MDCR					
29	Metal	Drawers	<100	<100	1	274	<MDCR	1		303	290	<MDCR					
30	Metal	Drawers	<100	<100	1	397	<MDCR	1		399	346	<MDCR					

Site: Incyte Grnomics Building: 112 Lab/Room: 37

Start Date: 08/22/03 Finish Date: 08/25/03

Surveyor: Walter Wiencek Surveyor: Paul Madairy

Area Survey Results			Wipe Test		β Direct			β Scan					γ Scan				x-Rate
Wipe Number	Surface	Location	β dpm/100 cm²	I-125 dpm/100 cm²	Survey Meter #	Gross cpm/100 cm²	dpm/100 cm² C-14	Survey Meter #	Grid No.	High cpm/100 cm²	Average cpm/100 cm²	Average dpm/100 cm² C-14	Survey Meter #	High cpm	Avg cpm	Average dpm/100 cm² I-125	Gross µRem/hr
31	Metal	Drawers	<100	<100	1	347	<MDCR	1		364	303	<MDCR					2
32	Metal	Drawers	<100	<100	1	342	<MDCR	1		343	301	<MDCR					
33	Metal	Drawers	<100	<100	1	272	<MDCR	1		338	287	<MDCR					
34	Metal	Drawers	<100	<100	1	305	<MDCR	1		313	273	<MDCR					
35	Metal	Drawers	<100	<100	1	258	<MDCR	1		304	279	<MDCR					
36	Metal	Drawers	<100	<100	1	314	<MDCR	1		315	277	<MDCR					
37	Metal	Drawers	<100	<100	1	359	<MDCR	1		368	327	<MDCR					
38	Metal	Drawers	<100	<100	1	368	<MDCR	1		390	342	<MDCR					
39	Metal	Drawers	<100	<100	1	284	<MDCR	1		391	296	<MDCR					3
40	Metal	Drawers	<100	<100	1	267	<MDCR	1		333	298	<MDCR					
41	Rock Board	Drawers	<100	<100	1	328	<MDCR	1		440	416	<MDCR					4
42	Rock Board	Drawers	<100	<100	1	348	<MDCR	1		452	386	<MDCR					
43	Metal	Drawers	<100	<100	1	309	<MDCR	1		391	311	<MDCR					
44	Metal	Drawers	<100	<100	1	311	<MDCR	1		452	361	<MDCR					
45	Metal	Cabinets	<100	<100	1	320	<MDCR	1		352	317	<MDCR					
46	Metal	Cabinets	<100	<100	1	330	<MDCR	1		357	288	<MDCR					
47	Metal	Cabinets	<100	<100	1	335	<MDCR	1		343	313	<MDCR					
48	Metal	Cabinets	<100	<100	1	330	<MDCR	1		366	337	<MDCR					
49	Metal	Cabinets	<100	<100	1	336	<MDCR	1		356	326	<MDCR					
50	Corian	Shelf	<100	<100	1	303	<MDCR	1		324	303	<MDCR					
51	Metal	Door	<100	<100	1	292	<MDCR	1		352	321	<MDCR					2
52	Metal	Ceiling Vents	<100	<100	1	358	<MDCR	1		503	423	<MDCR					3
53	Metal	Ceiling Vents	<100	<100	1	338	<MDCR	1		377	314	<MDCR					
54	Metal	Ceiling Vents	<100	<100	1	359	<MDCR	1		390	348	<MDCR					
55	Metal	Ceiling Vents	<100	<100	1	346	<MDCR	1		366	330	<MDCR					
56	Metal	Ceiling Exhaust	<100	<100	1	327	<MDCR	1		374	315	<MDCR					
57	Metal	Ceiling Exhaust	<100	<100	1	392	<MDCR	1		399	347	<MDCR					
58	Plexiglass	Shelf	<100	<100	1	335	<MDCR	1		386	322	<MDCR					
59	Metal	Sink	<100	<100	1	363	<MDCR	1		383	313	<MDCR					
60	Metal	Sink Swab	<100	<100	1	350	<MDCR			NA	NA						4

Site: Incyte Grnomics Building: 112 Lab/Room: 37

Start Date: 08/22/03 Finish Date: 08/25/03

Surveyor: Walter Wiencek Surveyor: Paul Madairy

Area Survey Results			*Wipe Test*		*β Direct*			*β Scan*					*γ Scan*				x-Rate
Wipe Number	Surface	Location	β dpm/100 cm^2	I-125 dpm/100 cm^2	Survey Meter #	Gross cpm/100 cm^2	dpm/100 cm^2 C-14	Survey Meter #	Grid No.	High cpm/100 cm^2	Average cpm/100 cm^2	Average dpm/100 cm^2 C-14	Survey Meter #	High cpm	Avg cpm	Average dpm/100 cm^2 I-125	Gross µRem/hr
61	Corian	Shelf	<100	<100	1	386	<MDCR	1		392	327	<MDCR					2
62	Metal	Drawers	<100	<100	1	331	<MDCR	1		344	314	<MDCR					
63	Metal	Drawers	<100	<100	1	300	<MDCR	1		384	309	<MDCR					

Survey Meter Information

Site: Incyte Grnomics Building: 112 Lab/Room: 37

	Meter 1		Meter 2		Meter 3		Meter 4		Meter 5	
Date:	8/25/2003		8/25/2003		8/25/2003		8/25/2003		8/25/2003	
Make:	Ludlum		Ludlum		Ludlum		Ludlum		Bicron	
Model:	2221		2221		2221		2221		Microrem	
SN:	174947		174947		108857		108857		B694G	
Probe Make:	Ludlum		Ludlum		Ludlum		Ludlum		NA	
Probe Model:	43-68		43-68		43-37		43-37		NA	
Probe SN:	118629		118629		074969		074969		NA	
Probe Area (cm^2):	100		100		425		425		NA	
Next Cal. Date:	1/24/2004		1/24/2004		1/24/2004		1/24/2004		1/25/2004	
Background Surface Material	Air		Ceiling Tile		Floor Tile		Floor Tile		Air	
Background(c)-Time(Min):	3050	10	4250	10	7637	10	7637	10	2 uRem/hr	
CS Isotope - Activity(μCi):	C-14		C-14		C-14		C-14		NA	NA
CS Source(cpm) - 2σ Check	37349	Yes	37349	Yes	22427	Yes	22427	Yes	NA	NA
L_c, L_d (Counts)	41	84	48	99	64	132	64	132	NA	NA
Direct MDC C-14, Scan MDC C 14 (dpm/100cm^2)	421	3477	494	4563	193	2203	193	2203	NA	NA
MDCR (With Background; cpm/100cm^2):	492		645		1059		1059		NA	
Efficiency, Isotope:	20.0%	C-14	20.0%	C-14	16.0%	C-14	16.0%	C-14	NA	NA

Please See MARSSIM Chapter 6 for a more detailed explanation of equations.

Lc= Critical Detection Level
Ld= a priori Detection limit
MDC= Minimum Detectable Concentration
MDCR= Minimum Detectable Count Rate

Direct MDC= $\frac{3+4.65*SQRT(B)}{T*\varepsilon_t*A*C}$

Scan MDC= $\frac{MDCR}{SQRT(E_{hf})*\varepsilon_t*\varepsilon_s*A*C}$

MDCR= 1.38*(SQRT(B/(T*60)))*60+(B/T)

B = Background Counts
T = Counting Time In Minutes
ε_t = Total Detector Efficiency in Counts/Disintegration
A = Physical Probe Area in cm^2
C = Other Constants and Factors When Needed
E_{hf} = Human Factor Efficiency
ε_s = Source Efficiency

Radiological Decommissioning Survey	Incyte Grnomics 1090 Elkton Rd	RSO, Inc.		
		Building 112	Room 37	Lab Type

Surveyors	Name: Walter Wiencek	Name Paul Madairy	Date 8/22/2003
Contact	Name: John Nicholson	Phone No. 1-302-275-2550	

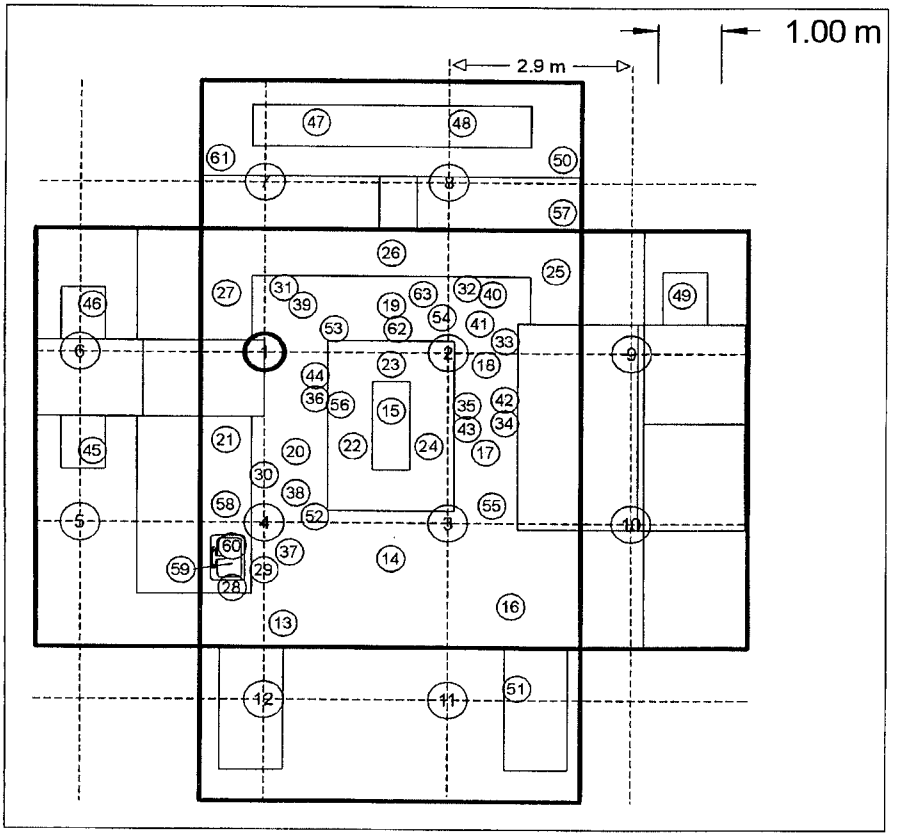

Isotopes And Wipe Results				
3-H	X		125-I	
14-C	X		Other	
35-S			Other	
32-P	X		Other	
33-P	X		Other	

Total Wipes: 63

Wipe Results All <200 dpm/ 100 cm^2?

Yes	X	No	

If No

Wipe No.	Result in dpm / 100 cm^2

Please mark "x" when completed.

x	1. Data sheet is completed with all appropriate data.
x	2. The meter sheet contains all of the meters used for this survey with all of their efficiencies, MDC's, & MDCR's.
x	3. The above map is clear and accurate with all wipe locations marked with a circled number.
x	4. The wipe results are attached with all results less than release criteria. If no please explain in the remarks section.
x	5. All direct measurements are less than the MDCR or less than the release criteria (If above MDCR).
x	6. Exposure is measured using an appropriate meter and the result is less than the release criteria with the location clearly marked on the map.

Signature:

Remarks:

Site: Incyte Grnomics Building: 112 Lab/Room: 37

Start Date: 08/22/03 Finish Date: 08/25/03

Surveyor: Walter Wiencek Surveyor: Paul Madairy

Fume Hood Survey Results			*Wipe Test*		*β Direct*			*β Scan*					*γ Scan*				x-Rate
Wipe Number	Surface	Location	β dpm/100 cm²	I-125 dpm/100 cm²	Survey Meter #	Gross cpm/100 cm²	dpm/100 cm² C-14	Survey Meter #	Grid No.	High cpm/100 cm²	Average cpm/100 cm²	Average dpm/100 cm² C-14	Survey Meter #	High cpm	Avg cpm	Average dpm/100 cm² I-125	Gross µRem/ hr
FMS 25																	
1	Corian	Inside Bottom	<100	<100	1	380	<MDCR	1		415	353	<MDCR					4
2	Corian	Inside Bottom	<100	<100	1	401	<MDCR	1		449	357	<MDCR					
3	Corian	Inside Left	<100	<100	1	293	<MDCR	1		432	307	<MDCR					
4	Corian	Inside Right	<100	<100	1	332	<MDCR	1		350	320	<MDCR					
5	Corian	Inside Top	<100	<100	1	356	<MDCR	1		411	366	<MDCR					3
6	Corian	Inside Top	<100	<100	1	313	<MDCR	1		390	343	<MDCR					
7	Corian	Inside Back	<100	<100	1	324	<MDCR	1		361	301	<MDCR					
8	Metal	Aprin	<100	<100	1	334	<MDCR	1		343	308	<MDCR					
9	Glass	Sashe	<100	<100	1	257	<MDCR	1		277	230	<MDCR					
10	Metal	Outside Front	<100	<100	1	294	<MDCR	1		321	267	<MDCR					
11	Corian	Swab	<100	<100	1	360	<MDCR			NA	NA	NA					3
FMS 26																	
1	Corian	Inside Bottom	<100	<100	1	376	<MDCR	1		404	342	<MDCR					3
2	Corian	Inside Bottom	<100	<100	1	386	<MDCR	1		415	339	<MDCR					
3	Corian	Inside Left	<100	<100	1	279	<MDCR	1		381	338	<MDCR					
4	Corian	Inside Right	<100	<100	1	277	<MDCR	1		382	306	<MDCR					
5	Corian	Inside Top	<100	<100	1	408	<MDCR	1		452	357	<MDCR					4
6	Corian	Inside Top	<100	<100	1	353	<MDCR	1		435	378	<MDCR					
7	Corian	Inside Back	<100	<100	1	262	<MDCR	1		385	337	<MDCR					
8	Metal	Aprin	<100	<100	1	326	<MDCR	1		431	365	<MDCR					
9	Glass	Sashe	<100	<100	1	297	<MDCR	1		334	273	<MDCR					
10	Metal	Outside Front	<100	<100	1	242	<MDCR	1		384	319	<MDCR					
11	Corian	Swab	<100	<100	1	382	<MDCR			NA	NA	NA					4

Radiological Decommissioning Survey	Incyte Grnomics 1090 Elkton Rd	RSO, Inc. Building: 112 / Room: 37 / Lab Type:

Surveyors	Name: Walter Wiencek	Name: Paul Madairy	Date: 8/22/2003
Contact	Name: John Nicholson	Phone No.: 1-302-275-2550	

FMS 25

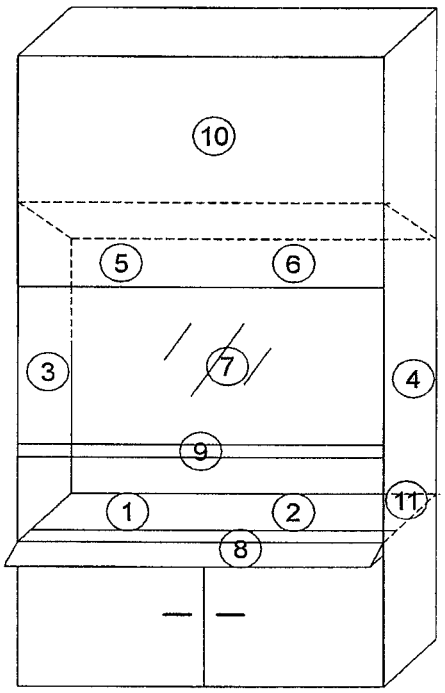

Total Wipes: 10			
Wipe Results All <300 dpm/ 100 cm²			
Yes	X	No	

If No

Wipe No.	Result in dpm / 100 cm²

Please use an "x" for completed.

X	1. Data sheet is completed with all appropriate data.
X	2. The meter sheet contains all of the meters used for this survey with all of their efficiencies, MDC's, & MDCR's.
X	3. The above map is clear and accurate with all wipe locations marked with a circled number.
X	4. The wipe results are attached with all results less than release criteria. If no please explain in the remarks section.
X	5. All direct measurements are less than the MDCR or less than the release criteria (If above MDCR).
X	6. Exposure is measured using an appropriate meter and the result is less than the release criteria with the location clearly marked on the map.

Signature:

Remarks:

Radiological Decommissioning Survey	Incyte Grnomics 1090 Elkton Rd	RSO, Inc.		
		Building 112	Room 37	Lab Type

Surveyors	Name: Walter Wiencek	Name Paul Madairy	Date 8/22/2003
Contact	Name: John Nicholson	Phone No. 1-302-275-2550	

FMS 26

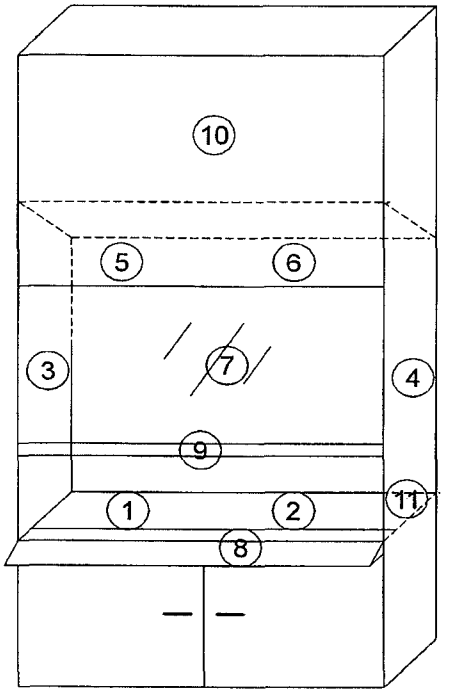

Total Wipes: 10			
Wipe Results All <300 dpm/ 100 cm^2			
Yes	X	No	

If No Wipe No.	Result in dpm / 100 cm^2

Please use an "x" for completed.

X	1. Data sheet is completed with all appropriate data.
X	2. The meter sheet contains all of the meters used for this survey with all of their efficiencies, MDC's, & MDCR's.
X	3. The above map is clear and accurate with all wipe locations marked with a circled number.
X	4. The wipe results are attached with all results less than release criteria. If no please explain in the remarks section.
X	5. All direct measurements are less than the MDCR or less than the release criteria (If above MDCR).
X	6. Exposure is measured using an appropriate meter and the result is less than the release criteria with the location clearly marked on the map.

Signature:

Remarks:

Site: Incyte Grnomics Building: 112 Lab/Room: 37

Start Date: 08/22/03 Finish Date: 08/25/03

Surveyor: Walter Wiencek Surveyor: Paul Madairy

Bio Hood Survey Results			*Wipe Test*		*β Direct*			*β Scan*					*γ Scan*				x-Rate
Wipe Number	Surface	Location	β dpm/100 cm^2	I-125 dpm/100 cm^2	Survey Meter #	Gross cpm/100 cm^2	dpm/100 cm^2 C-14	Survey Meter #	Grid No.	High cpm/100 cm^2	Average cpm/100 cm^2	Average dpm/100 cm^2 C-14	Survey Meter #	High cpm	Avg cpm	Average dpm/100 cm^2 I-125	Gross µRem/hr
FMS 24																	
1	Metal	Inside Bottom	<100	<100	1	376	<MDCR	1		385	354	<MDCR					2
2	Metal	Under Screen	<100	<100	1	386	<MDCR	1		412	375	<MDCR					
3	Metal	Inside Left	<100	<100	1	279	<MDCR	1		307	285	<MDCR					
4	Metal	Inside Right	<100	<100	1	277	<MDCR	1		350	287	<MDCR					
5	Metal	Inside Top	<100	<100	1	408	<MDCR	1		431	379	<MDCR					3
6	Metal	Inside Top	<100	<100	1	353	<MDCR	1		392	347	<MDCR					
7	Metal	Inside Back	<100	<100	1	262	<MDCR	1		307	255	<MDCR					
8	Metal	Aprin	<100	<100	1	326	<MDCR	1		342	310	<MDCR					
9	Glass	Sashe	<100	<100	1	297	<MDCR	1		327	294	<MDCR					
10	Metal	Outside Front	<100	<100	1	242	<MDCR	1		301	254	<MDCR					
11	Metal	Swab Drain	<100	<100	1	382	<MDCR			NA	NA						2

Radiological Decommissioning Survey	Incyte Grnomics 1090 Elkton Rd	RSO, Inc.		
		Building 112	Room 37	Lab Type

Surveyors	Name: Walter Wiencek	Name Paul Madairy	Date 8/22/2003
Contact	Name: John Nicholson	Phone No. 1-302-275-2550	

FMS 24

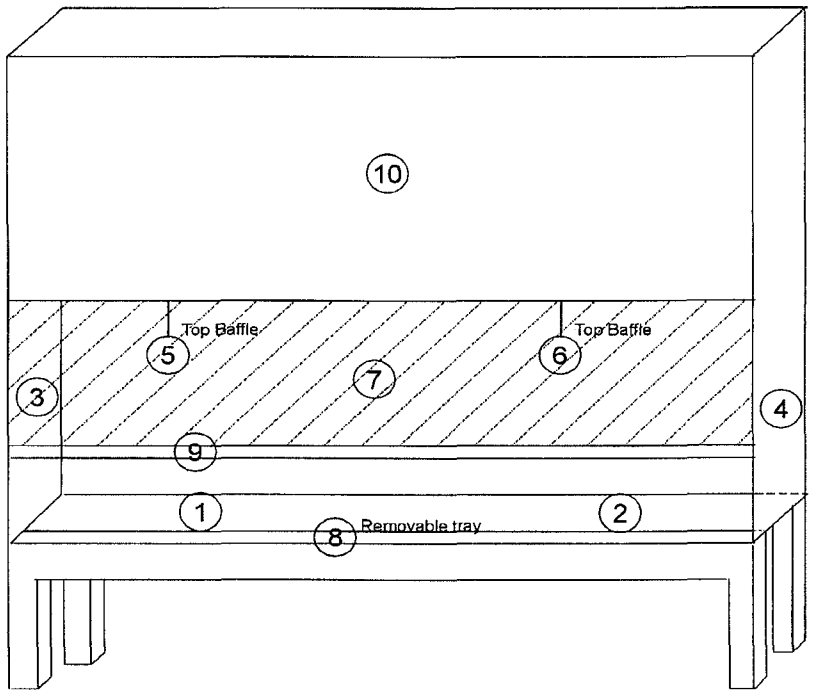

Total Wipes: 11			
Wipe Results All <300 dpm/ 100 cm^2?			
Yes	X	No	
If No			
Wipe No.	Result in dpm / 100 cm^2		

Please use an "x" for completed.

x	1. Data sheet is completed with all appropriate data.
x	2. The meter sheet contains all of the meters used for this survey with all of their efficiencies, MDC's, & MDCR's.
x	3. The above map is clear and accurate with all wipe locations marked with a circled number.
x	4. The wipe results are attached with all results less than release criteria. If no please explain in the remarks section.
x	5. All direct measurements are less than the MDCR or less than the release criteria (If above MDCR).
x	6. Exposure is measured using an appropriate meter and the result is less than the release criteria with the location clearly marked on the map.

Signature:

Remarks:

Site: Incyte Genomics Building: 112 Lab/Room: Penthouse

Start Date: 09/08/03 Finish Date: 09/08/03

Surveyor: Walter Wiencek Surveyor: Paul Madairy

Area Survey Results			*Wipe Test*		*β Direct*			*β Scan*					*γ Scan*				x-Rate
Wipe Number	Surface	Location	β dpm/100 cm^2	I-125 dpm/100 cm^2	Survey Meter #	Gross cpm/100 cm^2	dpm/100 cm^2 C-14	Survey Meter #	Grid No.	High cpm/100 cm^2	Average cpm/100 cm^2	Average dpm/100 cm^2 C-14	Survey Meter #	High cpm	Avg cpm	Average dpm/100 cm^2 I-125	Gross µRem/hr
1	Tar Paper	Floor	<100	<100	2	624	<MDCR	3		1683	1592	<MDCR	4	80	60	<MDCR	4
2	Tar Paper	Floor	<100	<100	2	639	<MDCR	3		1821	1492	<MDCR	4	80	60	<MDCR	
3	Tar Paper	Floor	<100	<100	2	628	<MDCR	3		1608	1545	<MDCR	4	80	60	<MDCR	
4	Tar Paper	Floor	<100	<100	2	708	<MDCR	3		1751	1487	<MDCR	4	80	60	<MDCR	
5	Tar Paper	Floor	<100	<100	2	723	<MDCR	3		1886	1506	<MDCR	4	80	60	<MDCR	
6	Tar Paper	Floor	<100	<100	2	688	<MDCR	3		1755	1521	<MDCR	4	80	60	<MDCR	4
7	Tar Paper	Floor	<100	<100	2	691	<MDCR	3		1804	1520	<MDCR	4	80	60	<MDCR	
8	Tar Paper	Floor	<100	<100	2	710	<MDCR	3		1893	1487	<MDCR	4	80	60	<MDCR	
9	Tar Paper	Floor	<100	<100	2	716	<MDCR	3		1743	1433	<MDCR	4	80	60	<MDCR	
10	Tar Paper	Floor	<100	<100	2	699	<MDCR	3		1851	1503	<MDCR	4	80	60	<MDCR	
11	Tar Paper	Floor	<100	<100	2	700	<MDCR	3		1791	1523	<MDCR	4	80	60	<MDCR	
12	Metal	Hood Vent Lab 2	<100	<100	1	423	<MDCR	1		453	403	<MDCR	4	80	60	<MDCR	3
13	Metal	Hood Vent Lab 2	<100	<100	1	408	<MDCR						4	80	60	<MDCR	
14	Metal	Hood Vent Lab 2	<100	<100	1	421	<MDCR	1		440	409	<MDCR	4	80	60	<MDCR	
15	Metal	Hood Vent Lab 2	<100	<100	1	389	<MDCR						4	80	60	<MDCR	
16	Metal	Hood Vent Lab 2	<100	<100	1	420	<MDCR	1		486	433	<MDCR	4	80	60	<MDCR	
17	Metal	Hood Vent Lab 2	<100	<100	1	399	<MDCR						4	80	60	<MDCR	
18	Metal	Hood Vent Lab 37	<100	<100	1	406	<MDCR	1		431	410	<MDCR	4	80	60	<MDCR	4
19	Metal	Hood Vent Lab 37	<100	<100	1	436	<MDCR						4	80	60	<MDCR	
20	Metal	Hood Vent Lab 37	<100	<100	1	381	<MDCR	1		403	390	<MDCR	4	80	60	<MDCR	
21	Metal	Hood Vent Lab 37	<100	<100	1	421	<MDCR						4	80	60	<MDCR	
22	Metal	Hood Vent Lab 37	<100	<100	1	432	<MDCR	1		461	423	<MDCR	4	80	60	<MDCR	
23	Metal	Hood Vent Lab 37	<100	<100	1	378	<MDCR						4	80	60	<MDCR	3
24	Metal	Hood Vent Lab 28	<100	<100	1	397	<MDCR	1		421	400	<MDCR	4	80	60	<MDCR	
25	Metal	Hood Vent Lab 28	<100	<100	1	416	<MDCR						4	80	60	<MDCR	
26	Metal	Hood Vent Lab 28	<100	<100	1	431	<MDCR	1		451	423	<MDCR	4	80	60	<MDCR	
27	Metal	Hood Vent Lab 28	<100	<100	1	429	<MDCR						4	80	60	<MDCR	4
28	Metal	Hood Vent Lab 28	<100	<100	1	420	<MDCR	1		463	431	<MDCR	4	80	60	<MDCR	
29	Metal	Hood Vent Lab 28	<100	<100	1	388	<MDCR						4	80	60	<MDCR	
30	Metal	Hood Vent Lab 26	<100	<100	1	393	<MDCR	1		423	403	<MDCR	4	80	60	<MDCR	3

Site: Incyte Genomics Building: 112 Lab/Room: Penthouse

Start Date: 09/08/03 Finish Date: 09/08/03

Surveyor: Walter Wiencek Surveyor: Paul Madairy

Area Survey Results			*Wipe Test*		*β Direct*			*β Scan*					*γ Scan*				x-Rate
Wipe Number	Surface	Location	β dpm/100 cm^2	I-125 dpm/100 cm^2	Survey Meter #	Gross cpm/100 cm^2	dpm/100 cm^2 C-14	Survey Meter #	Grid No.	High cpm/100 cm^2	Average cpm/100 cm^2	Average dpm/100 cm^2 C-14	Survey Meter #	High cpm	Avg cpm	Average dpm/100 cm^2 I-125	Gross µRem/hr
31	Metal	Hood Vent Lab 26	<100	<100	1	376	<MDCR	1		398	381	<MDCR	4	80	60	<MDCR	3
32	Metal	Hood Vent Lab 26	<100	<100	1	423	<MDCR	1		461	430	<MDCR	4	80	60	<MDCR	
33	Metal	Hood Vent Lab 26	<100	<100	1	406	<MDCR	1		423	401	<MDCR	4	80	60	<MDCR	
34	Metal	Hood Vent Lab 26	<100	<100	1	420	<MDCR	1		451	423	<MDCR	4	80	60	<MDCR	3
35	Metal	Hood Vent Lab 26	<100	<100	1	399	<MDCR	1		410	387	<MDCR	4	80	60	<MDCR	
36	Metal	Main Air Unit	<100	<100	1	423	<MDCR	1		440	430	<MDCR	4	80	60	<MDCR	
37	Metal	Main Air Unit	<100	<100	1	401	<MDCR	1		430	410	<MDCR	4	80	60	<MDCR	4
38	Metal	Main Air Unit	<100	<100	1	410	<MDCR	1		429	416	<MDCR	4	80	60	<MDCR	
39	Metal	Main Air Unit	<100	<100	1	388	<MDCR	1		411	403	<MDCR	4	80	60	<MDCR	3

Survey Meter Information

Site: Incyte Genomics Building: 112 Lab/Room: Penthouse

	Meter 1		Meter 2		Meter 3		Meter 4		Meter 5	
Date:	9/8/2003		9/8/2003		9/8/2003		9/8/2003		9/8/2003	
Make:	Ludlum		Ludlum		Ludlum		Ludlum		Bicron	
Model:	2221		2221		2221		2360		MicroRem	
SN:	174947		174947		108857		170576+		B694G	
Probe Make:	Ludlum		Ludlum		Ludlum		Ludlum		NA	
Probe Model:	43-68		43-68		43-37		44-3		NA	
Probe SN:	118629		118629		074969		118629		NA	
Probe Area (cm^2):	100		100		425		5		NA	
Next Cal. Date:	1/24/2004		1/24/2004		1/24/2004		1/29/2004		1/25/2004	
Background Surface Material	Air		Tar Paper		Tar Paper		Air		NA	
Background(c)-Time(Min):	2672	10	5405	10	14353	10	428	10	3	
CS Isotope - Activity(μCi):	C-14		C-14		C-14		Sr-90		NA	NA
CS Source(cpm) - 2σ Check	37332	Yes	37332	Yes	23079	Yes	199532	Yes	NA	NA
L_c, L_d (Counts)	38	79	54	111	88	179	15	33	NA	NA
Direct MDC C-14, Scan MDC C-14 (dpm/100cm^2)	395	3125	556	5579	263	3827	3183	15184	NA	NA
MDCR (With Background; cpm/100cm^2):	442		789		1840		113		NA	
Efficiency, Isotope:	20.0%	C-14	20.0%	C-14	16.0%	C-14	21.0%	I-125	NA	NA

Please See MARSSIM Chapter 6 for a more detailed explanation of equations.

Lc= Critical Detection Level
Ld= a priori Detection limit
MDC= Minimum Detectable Concentration
MDCR= Minimum Detectable Count Rate

Direct MDC= $\frac{3+4.65*SQRT(B)}{T*\varepsilon_t*A*C}$

Scan MDC= $\frac{MDCR}{SQRT(E_{hf})*\varepsilon_t*\varepsilon_s*A*C}$

MDCR= 1.38*(SQRT(B/(T*60)))*60+(B/T)

B = Background Counts
T = Counting Time In Minutes
ε_t = Total Detector Efficiency in Counts/Disintegration
A = Physical Probe Area in cm^2
C = Other Constants and Factors When Needed
E_{hf} = Human Factor Efficiency
ε_s = Source Efficiency

Radiological Decommissioning Survey	Incyte Genomics 1090 Elkton Rd	RSO, Inc.		
		Building: 112	Room: Penthouse	Lab Type:

Surveyors	Name: Walter Wiencek	Name: Paul Madairy	Date: 9/8/2003
Contact	Name: John Nicholson	Phone No.: 1-302-275-2550	

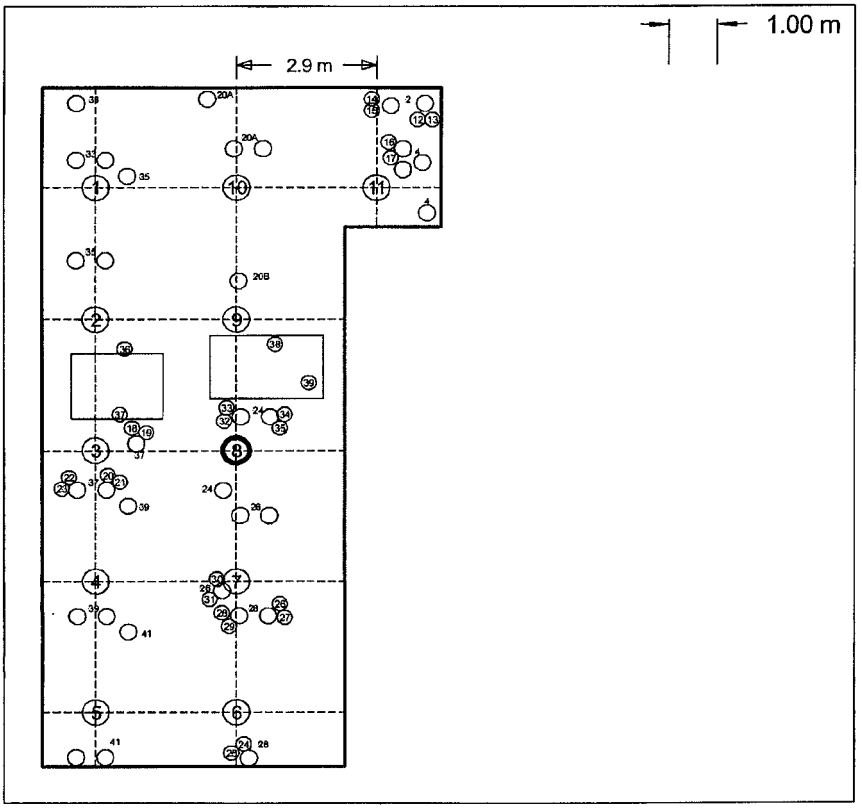

Isotopes And Wipe Results				
3-H	X		125-I	
14-C	X		Other	
35-S			Other	
32-P			Other	
33-P	X		Other	

Total Wipes: 39

Wipe Results All <200 dpm/ 100 cm^2?

Yes	X	No	

If No

Wipe No.	Result in dpm / 100 cm^2

Please mark "x" when completed.

x	1. Data sheet is completed with all appropriate data.
x	2. The meter sheet contains all of the meters used for this survey with all of their efficiencies, MDC's, & MDCR's.
x	3. The above map is clear and accurate with all wipe locations marked with a circled number.
x	4. The wipe results are attached with all results less than release criteria. If no please explain in the remarks section.
x	5. All direct measurements are less than the MDCR or less than the release criteria (If above MDCR).
x	6. Exposure is measured using an appropriate meter and the result is less than the release criteria with the location clearly marked on the map.

Signature: Paul Madairy

Remarks:

Site: Incyte Building: 112 Lab/Room: Roof

Start Date: 09/08/03 Finish Date: 09/08/03

Surveyor: Walter Wiencek Surveyor: Paul Madairy

Area Survey Results			*Wipe Test*		*β Direct*			*β Scan*					*γ Scan*				x-Rate
Wipe Number	Surface	Location	β dpm/100 cm^2	I-125 dpm/100 cm^2	Survey Meter #	Gross cpm/100 cm^2	dpm/100 cm^2 C-14	Survey Meter #	Grid No.	High cpm/100 cm^2	Average cpm/100 cm^2	Average dpm/100 cm^2 C-14	Survey Meter #	High cpm	Avg cpm	Average dpm/100 cm^2 I-125	Gross µRem/ hr
1	Tar Paper	Roof	<100	<100	2	650	<MDCR	3		1871	1520	<MDCR	4	80	60	<MDCR	
2	Tar Paper	Roof	<100	<100	2	683	<MDCR	3		1793	1517	<MDCR	4	80	60	<MDCR	
3	Tar Paper	Roof	<100	<100	2	735	<MDCR	3		1831	1601	<MDCR	4	80	60	<MDCR	4
4	Tar Paper	Roof	<100	<100	2	691	<MDCR	3		1803	1631	<MDCR	4	80	60	<MDCR	
5	Tar Paper	Roof	<100	<100	2	699	<MDCR	2		739	702	<MDCR	4	80	60	<MDCR	3
6	Metal / Tar Paper	Vent Stack	<100	<100	2	703	<MDCR	2		741	709	<MDCR	4	80	60	<MDCR	
7	Tar Paper	Roof	<100	<100	2	748	<MDCR	2		802	743	<MDCR	4	80	60	<MDCR	
8	Tar Paper	Roof	<100	<100	2	688	<MDCR	2		723	702	<MDCR	4	80	60	<MDCR	4
9	Tar Paper	Roof	<100	<100	2	703	<MDCR	3		1891	1563	<MDCR	4	80	60	<MDCR	
10	Tar Paper	Roof	<100	<100	2	739	<MDCR	3		1788	1509	<MDCR	4	80	60	<MDCR	
11	Tar Paper	Roof	<100	<100	2	721	<MDCR	3		1833	1525	<MDCR	4	80	60	<MDCR	
12	Tar Paper	Roof	<100	<100	2	699	<MDCR	3		1798	1539	<MDCR	4	80	60	<MDCR	
13	Metal / Tar Paper	Roof Drains	<100	<100	2	731	<MDCR	2		801	723	<MDCR	4	80	60	<MDCR	
14	Metal / Tar Paper	Roof Drains	<100	<100	2	702	<MDCR	2		721	701	<MDCR	4	80	60	<MDCR	5
15	Metal / Tar Paper	Roof Drains	<100	<100	2	640	<MDCR	2		688	653	<MDCR	4	80	60	<MDCR	
16	Metal / Tar Paper	Roof Drains	<100	<100	2	688	<MDCR	2		793	721	<MDCR	4	80	60	<MDCR	
17	Metal / Tar Paper	Roof Drains	<100	<100	2	654	<MDCR	2		682	653	<MDCR	4	80	60	<MDCR	
18	Metal / Tar Paper	Roof Drains	<100	<100	2	687	<MDCR	2		720	691	<MDCR	4	80	60	<MDCR	
19	Metal / Tar Paper	Roof Drains	<100	<100	2	709	<MDCR	2		740	723	<MDCR	4	80	60	<MDCR	4
20	Metal / Tar Paper	Roof Drains	<100	<100	2	731	<MDCR	2		799	738	<MDCR	4	80	60	<MDCR	
21	Metal / Tar Paper	Roof Drains	<100	<100	2	698	<MDCR	2		821	718	<MDCR	4	80	60	<MDCR	
22	Metal / Tar Paper	Roof Drains	<100	<100	2	699	<MDCR	2		743	702	<MDCR	4	80	60	<MDCR	
23	Metal / Tar Paper	Roof Drains	<100	<100	2	719	<MDCR	2		743	721	<MDCR	4	80	60	<MDCR	3
24	Metal / Tar Paper	Roof Drains	<100	<100	2	732	<MDCR	2		760	741	<MDCR	4	80	60	<MDCR	
25	Metal / Tar Paper	Roof Drains	<100	<100	2	721	<MDCR	2		753	731	<MDCR	4	80	60	<MDCR	
26	Metal / Tar Paper	Roof Drains	<100	<100	2	782	<MDCR	2		799	760	<MDCR	4	80	60	<MDCR	
27	Metal / Tar Paper	Roof Drains	<100	<100	2	699	<MDCR	2		721	683	<MDCR	4	80	60	<MDCR	
28	Metal / Tar Paper	Roof Drains	<100	<100	2	722	<MDCR	2		741	728	<MDCR	4	80	60	<MDCR	3
29	Metal / Tar Paper	Roof Drains	<100	<100	2	704	<MDCR	2		739	708	<MDCR	4	80	60	<MDCR	
30	Metal / Tar Paper	Roof Drains	<100	<100	2	683	<MDCR	2		721	699	<MDCR	4	80	60	<MDCR	

Site: Incyte Building: 112 Lab/Room: Roof

Start Date: 09/08/03 Finish Date: 09/08/03

Surveyor: Walter Wiencek Surveyor: Paul Madairy

Area Survey Results			*Wipe Test*		*β Direct*			*β Scan*					*γ Scan*				x-Rate
Wipe Number	Surface	Location	β dpm/100 cm^2	I-125 dpm/100 cm^2	Survey Meter #	Gross cpm/100 cm^2	dpm/100 cm^2 C-14	Survey Meter #	Grid No.	High cpm/100 cm^2	Average cpm/100 cm^2	Average dpm/100 cm^2 C-14	Survey Meter #	High cpm	Avg cpm	Average dpm/100 cm^2 I-125	Gross µRem/hr
31	Metal / Tar Paper	Roof Drains	<100	<100	2	687	<MDCR	2		731	715	<MDCR	4	80	60	<MDCR	
32	Metal / Tar Paper	Roof Drains	<100	<100	6	763	<MDCR	2		821	761	<MDCR	4	80	60	<MDCR	3
33	Metal / Tar Paper	Roof Drains	<100	<100	1	430	<MDCR	1		456	427	<MDCR	4	80	60	<MDCR	
34	Metal / Tar Paper	Roof Drains	<100	<100	1	402	<MDCR	1		431	409	<MDCR	4	80	60	<MDCR	
35	Metal / Tar Paper	Roof Drains	<100	<100	1	419	<MDCR	1		448	417	<MDCR	4	80	60	<MDCR	
36	Metal / Tar Paper	Roof Drains	<100	<100	1	423	<MDCR	1		439	428	<MDCR	4	80	60	<MDCR	4
37	Metal / Tar Paper	Roof Drains	<100	<100	1	418	<MDCR	1		431	413	<MDCR	4	80	60	<MDCR	
38	Metal / Tar Paper	Roof Drains	<100	<100	1	409	<MDCR	1		422	413	<MDCR	4	80	60	<MDCR	
39	Plastic	Roof Drains	<100	<100	1	440	<MDCR	1		473	438	<MDCR	4	80	60	<MDCR	
40	PVC	Roof Drains	<100	<100	1	399	<MDCR	1		721	406	<MDCR	4	80	60	<MDCR	3
41	Metal / Tar Paper	Roof Drains	<100	<100	1	420	<MDCR	1		443	416	<MDCR	4	80	60	<MDCR	
42	Plastic	Roof Drains	<100	<100	1	431	<MDCR	1		463	439	<MDCR	4	80	60	<MDCR	
43	Metal / Tar Paper	Roof Drains	<100	<100	2	723	<MDCR	2		764	731	<MDCR	4	80	60	<MDCR	
44	Metal / Tar Paper	Roof Drains	<100	<100	2	688	<MDCR	2		723	701	<MDCR	4	80	60	<MDCR	
45	Metal / Tar Paper	Roof Drains	<100	<100	2	703	<MDCR	2		741	716	<MDCR	4	80	60	<MDCR	
46	Plastic	Roof Drains	<100	<100	1	426	<MDCR	1		449	433	<MDCR	4	80	60	<MDCR	
47	Metal / Tar Paper	Roof Drains	<100	<100	2	722	<MDCR	2		733	711	<MDCR	4	80	60	<MDCR	
48	Metal / Tar Paper	Roof Drains	<100	<100	6	718	<MDCR	2		743	729	<MDCR	4	80	60	<MDCR	
49	Plastic	Roof Drains	<100	<100	1	429	<MDCR	1		453	422	<MDCR	4	80	60	<MDCR	4
50	Metal / Tar Paper	Roof Drains	<100	<100	2	704	<MDCR	2		739	716	<MDCR	4	80	60	<MDCR	
51	Metal / Tar Paper	Roof Drains	<100	<100	2	709	<MDCR	2		721	701	<MDCR	4	80	60	<MDCR	
52	Metal / Tar Paper	Roof Drains	<100	<100	2	698	<MDCR	2		733	716	<MDCR	4	80	60	<MDCR	
53	Metal / Tar Paper	Roof Drains	<100	<100	2	683	<MDCR	2		723	710	<MDCR	4	80	60	<MDCR	
54	Plastic	Roof Drains	<100	<100	1	403	<MDCR	1		421	409	<MDCR	4	80	60	<MDCR	3

Survey Meter Information

Site: Incyte Building: 112 Lab/Room: Roof

	Meter 1		Meter 2		Meter 3		Meter 4		Meter 5	
Date:	9/8/2003		9/8/2003		9/8/2003		9/8/2003		9/8/2003	
Make:	Ludlum		Ludlum		Ludlum		Ludlum		Bicron	
Model:	2221		2221		2221		2360		MicroRem	
SN:	174947		174947		108857		170576		B694G	
Probe Make:	Ludlum		Ludlum		Ludlum		Ludlum		NA	
Probe Model:	43-68		43-68		43-37		44-3		NA	
Probe SN:	118629		118629		118629		023384		NA	
Probe Area (cm^2):	100		100		425		5		NA	
Next Cal. Date:	1/24/2004		1/24/2004		1/24/2004		1/29/2004		1/25/2004	
Background Surface Material	Air		Tar Paper		Tar Paper		Air		NA	
Background(c)-Time(Min):	2672	10	5405	10	14353	10	428	10	3	
CS Isotope - Activity(μCi):	C-14		C-14		C-14		Sr-90		NA	NA
CS Source(cpm) - 2σ Check	37332	Yes	37332	Yes	23079	Yes	199532	Yes	NA	NA
L_c, L_d (Counts)	38	79	54	111	88	179	15	33	NA	NA
Direct MDC C-14, Scan MDC C-14 (dpm/100cm^2)	395	3125	556	5579	263	3827	3183	15184	NA	NA
MDCR (With Background; cpm/100cm^2):	442		789		1840		113		NA	
Efficiency, Isotope:	20.0%	C-14	20.0%	C-14	16.0%	C-14	21.0%	I-125	NA	NA

Please See MARSSIM Chapter 6 for a more detailed explanation of equations.

Lc= Critical Detection Level
Ld= a priori Detection limit
MDC= Minimum Detectable Concentration
MDCR= Minimum Detectable Count Rate

$$\text{Direct MDC} = \frac{3+4.65*SQRT(B)}{T*\varepsilon_t*A*C}$$

$$\text{Scan MDC} = \frac{MDCR}{SQRT(E_{hf})*\varepsilon_t*\varepsilon_s*A*C}$$

$$MDCR = 1.38*(SQRT(B/(T*60)))*60+(B/T)$$

B = Background Counts
T = Counting Time In Minutes
ε_t = Total Detector Efficiency in Counts/Disintegration
A = Physical Probe Area in cm^2
C = Other Constants and Factors When Needed
E_{hf} = Human Factor Efficiency
ε_s = Source Efficiency

Radiological Decommissioning Survey	Incyte 1090 Elkton Rd	RSO, Inc.		
		Building 112	Room Roof	Lab Type

Surveyors	Name: Walter Wiencek	Name Paul Madairy	Date 9/8/2003
Contact	Name: John Nicholson	Phone No. 1-302-275-2550	

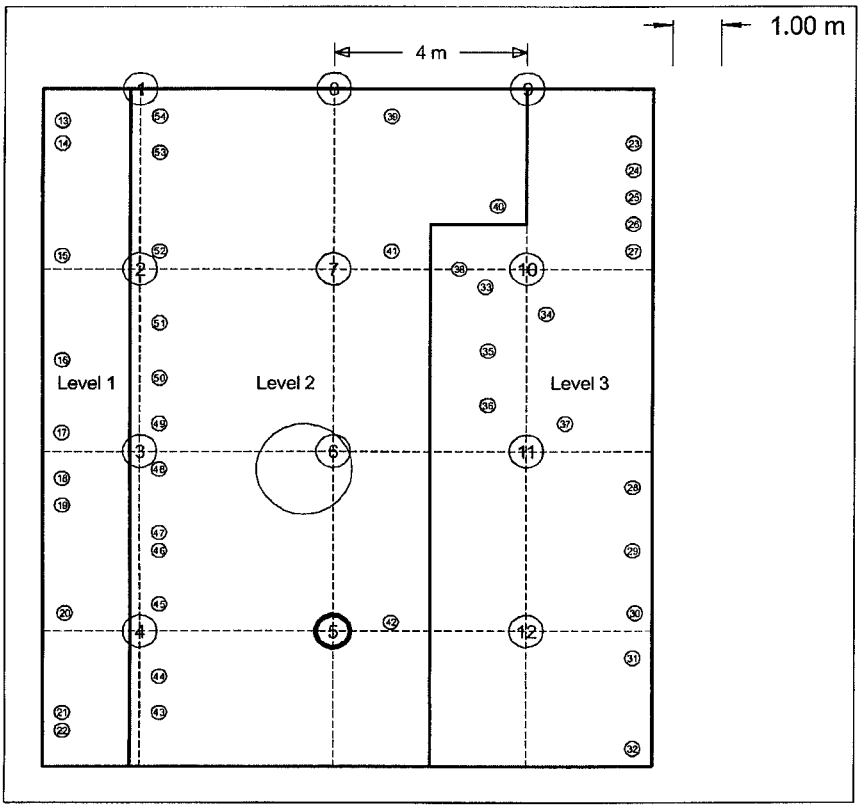

Isotopes And Wipe Results				
3-H	X		125-I	
14-C	X		Other	
35-S			Other	
32-P			Other	
33-P	X		Other	

Total Wipes: 54

Wipe Results All <200 dpm/ 100 cm^2?

Yes	X	No	

If No

Wipe No.	Result in dpm / 100 cm^2

Please mark "x" when completed.

x	1. Data sheet is completed with all appropriate data.
x	2. The meter sheet contains all of the meters used for this survey with all of their efficiencies, MDC's, & MDCR's.
x	3. The above map is clear and accurate with all wipe locations marked with a circled number.
x	4. The wipe results are attached with all results less than release criteria. If no please explain in the remarks section.
x	5. All direct measurements are less than the MDCR or less than the release criteria (If above MDCR).
x	6. Exposure is measured using an appropriate meter and the result is less than the release criteria with the location clearly marked on the map.

Signature: Paul Madairy

Remarks:

Site: Incyte Genomics Building: 115 Lab/Room: 77

Start Date: 09/18/03 Finish Date: 09/18/03

Surveyor: Walter Wiencek Surveyor: Paul Madairy

Area Survey Results			*Wipe Test*		*β Direct*			*β Scan*					*γ Scan*				x-Rate
Wipe Number	Surface	Location	β dpm/100 cm^2	I-125 dpm/100 cm^2	Survey Meter #	Gross cpm/100 cm^2	dpm/100 cm^2 C-14	Survey Meter #	Grid No.	High cpm/100 cm^2	Average cpm/100 cm^2	Average dpm/100 cm^2 C-14	Survey Meter #	High cpm	Avg cpm	Average dpm/100 cm^2 I-125	Gross µRem/hr
1	Metal	Washer	<100	<100	1	470	<MDCR	1		496	448	<MDCR					
2	Linoleum	Floor	<100	<100	2	522	<MDCR	3		1565	1399	<MDCR					3
3	Linoleum	Floor	<100	<100	2	480	<MDCR	3		1496	1302	<MDCR					
4	Linoleum	Floor	<100	<100	2	541	<MDCR	3		1435	1307	<MDCR					3
5	Metal	Door	<100	<100	1	358	<MDCR	1		382	363	<MDCR					
6	Drywall	Wall	<100	<100	1	342	<MDCR	1		442	365	<MDCR					
7	Plastic	Nanopure	<100	<100	1	353	<MDCR	1		375	329	<MDCR					
8	Drywall	Wall	<100	<100	1	382	<MDCR	1		404	378	<MDCR					
9	Drywall	Wall	<100	<100	1	371	<MDCR	1		391	355	<MDCR					
10	Drywall	Wall	<100	<100	1	426	<MDCR	1		475	431	<MDCR					
11	Drywall	Wall	<100	<100	1	348	<MDCR	1		381	343	<MDCR					
12	Corian	Poster Board	<100	<100	1	419	<MDCR	1		476	416	<MDCR					
13	Metal	Drain	118	<100	1	377	<MDCR										
14	Metal	Drain Swab	<100	<100	1	366	<MDCR										4
15	Metal	Eyewasher	<100	<100	1	414	<MDCR	1		452	432	<MDCR					3
16	Corian	Benchtop	<100	<100	1	378	<MDCR	1		403	367	<MDCR					3
17	Metal	Drawers	<100	<100	1	386	<MDCR	1		411	369	<MDCR					
18	Metal	Sink	<100	<100	1	377	<MDCR	1		417	368	<MDCR					
19	Metal	Sink Swab	<100	<100	1	344	<MDCR										
20	Metal	Washer	<100	<100	1	487	<MDCR	1		522	474	<MDCR					3
21	Metal	Washer	<100	<100	1	422	<MDCR	1		454	399	<MDCR					
22	Metal	Washer	<100	<100	1	405	<MDCR	1		424	389	<MDCR					
23	Metal	Hood	<100	<100	1	374	<MDCR	1		435	387	<MDCR					4
24	Metal	Ceiling Vent	<100	<100	1	487	<MDCR	1		504	475	<MDCR					3
25	Metal	Cabinet	<100	<100	1	356	<MDCR	1		401	370	<MDCR					

Survey Meter Information

Site: Incyte Genomics Building: 115 Lab/Room: 77

	Meter 1		Meter 2		Meter 3		Meter 4		Meter 5	
Date:	9/18/2003		9/18/2003		9/18/2003		9/18/2003		9/18/2003	
Make:	Ludlum		Ludlum		Ludlum		Ludlum		Bicron	
Model:	2221		2221		2221		2221		MicroRem	
SN:	174947		174947		108857		174947		B694G	
Probe Make:	Ludlum		Ludlum		Ludlum		Ludlum		NA	
Probe Model:	43-68		43-68		43-37		43-68		NA	
Probe SN:	118629		118629		074969		118629		NA	
Probe Area (cm^2):	100		100		425		100		NA	
Next Cal. Date:	1/24/2004		1/24/2004		1/24/2004		1/24/2004		1/25/2004	
Background Surface Material	Air		Linoleum		Linoleum		Linoleum		Air	
Background(c)-Time(Min):	3498	10	4650	10	13223	10	4650	10	3	
CS Isotope - Activity(μCi):	C-14		C-14		C-14		C-14		NA	NA
CS Source(cpm) - 2σ Check	37104	Yes	37104	Yes	37104	Yes	37104	Yes	NA	NA
L_c, L_d (Counts)	44	90	50	103	85	172	50	103	NA	NA
Direct MDC C-14, Scan MDC C-14 (dpm/100cm^2)	450	3887	516	4918	253	3558	516	4918	NA	NA
MDCR (With Background; cpm/100cm^2):	550		696		1711		696		NA	
Efficiency, Isotope:	20.0%	C-14	20.0%	C-14	16.0%	C-14	20.0%	C-14	NA	NA

Please See MARSSIM Chapter 6 for a more detailed explanation of equations.

Lc= Critical Detection Level
Ld= a priori Detection limit
MDC= Minimum Detectable Concentration
MDCR= Minimum Detectable Count Rate

Direct MDC= $\frac{3+4.65*SQRT(B)}{T*\varepsilon_t*A*C}$

Scan MDC= $\frac{MDCR}{SQRT(E_{hf})*\varepsilon_t*\varepsilon_s*A*C}$

MDCR= 1.38*(SQRT(B/(T*60)))*60+(B/T)

B = Background Counts
T = Counting Time In Minutes
ε_t = Total Detector Efficiency in Counts/Disintegration
A = Physical Probe Area in cm^2
C = Other Constants and Factors When Needed
E_{hf} = Human Factor Efficiency
ε_s = Source Efficiency

Radiological Decommissioning Survey	Incyte Genomics 1090 Elkton Rd	RSO, Inc.		
		Building	Room	Lab Type
		115	77	

Surveyors	Name: Walter Wiencek	Name Paul Madairy	Date 9/18/2003
Contact	Name: John Nicholson	Phone No. 1-302-275-2550	

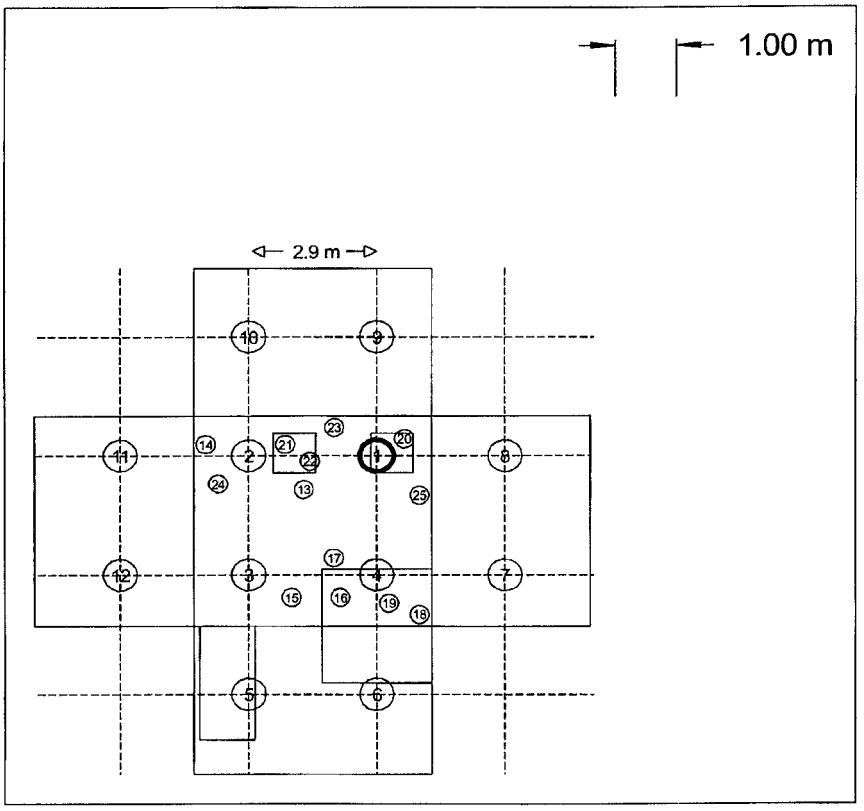

Isotopes And Wipe Results				
3-H	x		125-I	x
14-C	x		Other	
35-S			Other	
32-P	x		Other	
33-P	x		Other	

Total Wipes: 25

Wipe Results All <200 dpm/ 100 cm^2?

Yes	X	No	

If No

Wipe No.	Result in dpm / 100 cm^2

Please mark "x" when completed.

x	1. Data sheet is completed with all appropriate data.
x	2. The meter sheet contains all of the meters used for this survey with all of their efficiencies, MDC's, & MDCR's.
x	3. The above map is clear and accurate with all wipe locations marked with a circled number.
x	4. The wipe results are attached with all results less than release criteria. If no please explain in the remarks section.
x	5. All direct measurements are less than the MDCR or less than the release criteria (If above MDCR).
x	6. Exposure is measured using an appropriate meter and the result is less than the release criteria with the location clearly marked on the map.

Signature: Paul Madairy

Remarks:

Site: Incyte Genomics Building: 115 Lab/Room: 83

Start Date: 09/02/03 Finish Date: 09/02/03

Surveyor: Walter Wiencek Surveyor: Paul Madairy

Area Survey Results			*Wipe Test*		*β Direct*			*β Scan*					*γ Scan*				x-Rate
Wipe Number	Surface	Location	β dpm/100 cm^2	I-125 dpm/100 cm^2	Survey Meter #	Gross cpm/100 cm^2	dpm/100 cm^2 C-14	Survey Meter #	Grid No.	High cpm/100 cm^2	Average cpm/100 cm^2	Average dpm/100 cm^2 C-14	Survey Meter #	High cpm	Avg cpm	Average dpm/100 cm^2 I-125	Gross μRem/hr
1	Linoleum	Floor	<100	<100	6	560	<MDCR	7		1420	1248	<MDCR	4	140	80	<MDCR	3
2	Linoleum	Floor	<100	<100	6	565	<MDCR	7		1401	1302	<MDCR	4	140	80	<MDCR	
3	Linoleum	Floor	<100	<100	6	573	<MDCR	7		1543	1330	<MDCR	4	140	80	<MDCR	3
4	Linoleum	Floor	<100	<100	6	538	<MDCR	7		1643	1387	<MDCR	4	140	80	<MDCR	
5	Linoleum	Floor	<100	<100	6	581	<MDCR	7		1599	1329	<MDCR	4	140	80	<MDCR	
6	Linoleum	Floor	<100	<100	6	532	<MDCR	7		1481	1371	<MDCR	4	140	80	<MDCR	
7	Metal	Hood	<100	<100	1	440	<MDCR	1		489	420	<MDCR	4	140	80	<MDCR	
8	Drywall	Wall	<100	<100	1	443	<MDCR	1		490	458	<MDCR	4	140	80	<MDCR	3
9	Drywall	Wall	<100	<100	1	450	<MDCR	1		498	444	<MDCR	4	140	80	<MDCR	
10	Glass	Glass	<100	<100	1	431	<MDCR	1		444	417	<MDCR	4	140	80	<MDCR	
11	Drywall	Wall	<100	<100	1	450	<MDCR	1		511	434	<MDCR	4	140	80	<MDCR	
12	Metal	Hood	<100	<100	1	443	<MDCR	1		477	431	<MDCR	4	140	80	<MDCR	

Survey Meter Information

Site: Incyte Genomics Building: 115 Lab/Room: 83

	Meter 1		Meter 2		Meter 3		Meter 4		Meter 5	
Date:	9/2/2003		9/2/2003		9/2/2003		9/2/2003		9/2/2003	
Make:	Ludlum		Ludlum		Ludlum		Ludlum		Bicron	
Model:	2221		2221		2221		2360		MicroRem	
SN:	174947		174947		108857		170576		B694G	
Probe Make:	Ludlum		Ludlum		Ludlum		Ludlum		NA	
Probe Model:	43-68		43-68		43-37		44-3		NA	
Probe SN:	118629		118629		074969		023384		NA	
Probe Area (cm^2):	100		100		425		5		NA	
Next Cal. Date:	1/24/2004		1/24/2004		1/24/2004		1/29/2004		1/25/2004	
Background Surface Material	Air		Carpet		Carpet		Air		Air	
Background(c)-Time(Min):	4185	10	5364	10	9951	10	593	10	5	
CS Isotope - Activity(µCi):	C-14		C-14		C-14		Sr-90		NA	NA
CS Source(cpm) - 2σ Check	37104	Yes	37104	Yes	37104	Yes	199967	Yes	NA	NA
L_c, L_d (Counts)	48	98	54	111	74	150	18	39	NA	NA
Direct MDC C-14, Scan MDC C-14 (dpm/100cm^2)	491	4506	553	13859	220	6927	3696	19074	NA	NA
MDCR (With Background; cpm/100cm^2):	637		784		1332		142		NA	
Efficiency, Isotope:	20.0%	C-14	20.0%	C-14	16.0%	C-14	21.0%	I-125	NA	NA

Please See MARSSIM Chapter 6 for a more detailed explanation of equations.

Lc= Critical Detection Level
Ld= a priori Detection limit
MDC= Minimum Detectable Concentration
MDCR= Minimum Detectable Count Rate

Direct MDC= $\frac{3+4.65*SQRT(B)}{T*\varepsilon_t*A*C}$

Scan MDC= $\frac{MDCR}{SQRT(E_{hf})*\varepsilon_t*\varepsilon_s*A*C}$

MDCR= 1.38*(SQRT(B/(T*60)))*60+(B/T)

B = Background Counts
T = Counting Time In Minutes
ε_t = Total Detector Efficiency in Counts/Disintegration
A = Physical Probe Area in cm^2
C = Other Constants and Factors When Needed
E_{hf} = Human Factor Efficiency
ε_s = Source Efficiency

Survey Meter Information

Site: Incyte Genomics Building: 115 Lab/Room: 83

	Meter 6		Meter 7		Meter 8	Meter 9	Meter 10
Date:	9/2/2003		9/2/2003				
Make:	Ludlum		Ludlum				
Model:	2221		2221				
SN:	174947		108857				
Probe Make:	Ludlum		Ludlum				
Probe Model:	43-68		43-37				
Probe SN:	118629		074969				
Probe Area (cm^2):	100		425				
Next Cal. Date:	1/24/2004		1/24/2004				
Background Surface Material	Linoleum		Linoleum				
Background(c)-Time(Min):	5923	10	12808	10			
Isotope - Activity(μCi):	C-14		C-14				
Source(cpm) - 2σ Check	37104	Yes	37104	Yes			
L_c, L_d (Counts)	57	116	83	169			
Direct MDC C-14, Scan MDC C-14 (dpm/100cm^2)	581	6028	249	3459			
MDCR (With Background; cpm/100cm^2):	852		1663				
Efficiency, Isotope:	20.0%	C-14	16.0%	C-14			

Please See MARSSIM Chapter 6 for a more detailed explanation of equations.

Lc= Critical Detection Level
Ld= a priori Detection limit
MDC= Minimum Detectable Concentration
MDCR= Minimum Detectable Count Rate

Direct MDC= $\frac{3+4.65*SQRT(B)}{T*\varepsilon_t*A*C}$

Scan MDC= $\frac{MDCR}{SQRT(E_{hf})*\varepsilon_t*\varepsilon_s*A*C}$

MDCR= 1.38*(SQRT(B/(T*60)))*60+(B/T)

B = Background Counts
T = Counting Time In Minutes
ε_t = Total Detector Efficiency in Counts/Disintegration
A = Physical Probe Area in cm^2
C = Other Constants and Factors When Needed
E_{hf} = Human Factor Efficiency
ε_s = Source Efficiency

Radiological Decommissioning Survey	Incyte Genomics 1090 Elkton Rd	RSO, Inc.		
		Building 115	Room 83	Lab Type

Surveyors	Name: Walter Wiencek	Name Paul Madairy	Date 9/2/2003
Contact	Name: John Nicholson	Phone No. 1-302-275-2550	

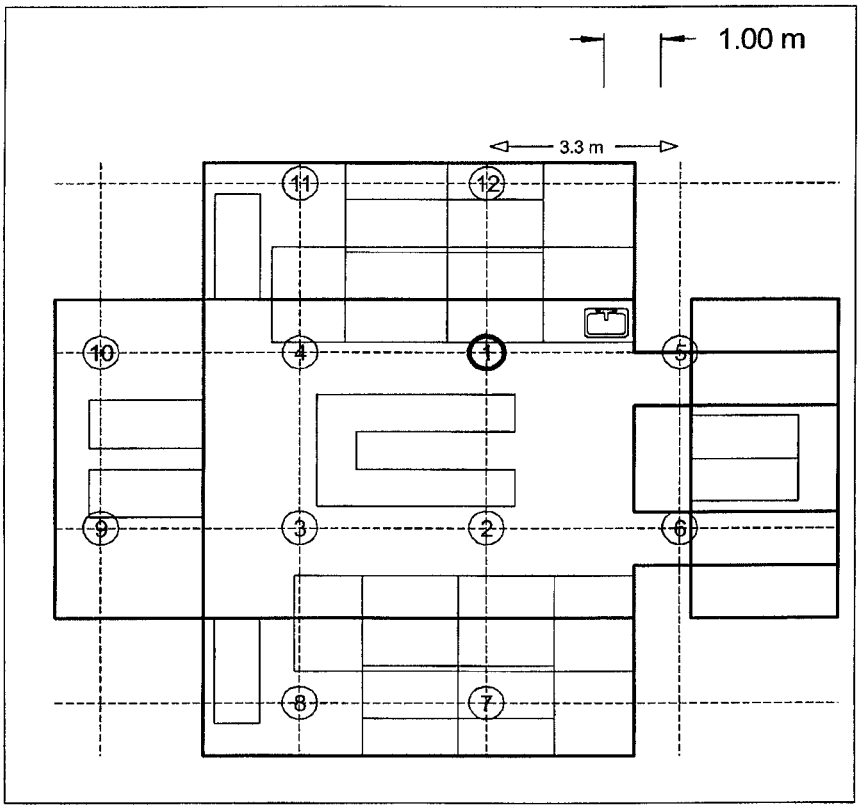

Isotopes And Wipe Results				
3-H			125-I	
14-C			Other	
35-S			Other	
32-P			Other	
33-P			Other	

Total Wipes: 12

Wipe Results All <200 dpm/ 100 cm^2?

Yes	X	No	

If No

Wipe No.	Result in dpm / 100 cm^2

Please mark "x" when completed.

x	1. Data sheet is completed with all appropriate data.
x	2. The meter sheet contains all of the meters used for this survey with all of their efficiencies, MDC's, & MDCR's.
x	3. The above map is clear and accurate with all wipe locations marked with a circled number.
x	4. The wipe results are attached with all results less than release criteria. If no please explain in the remarks section.
x	5. All direct measurements are less than the MDCR or less than the release criteria (If above MDCR).
x	6. Exposure is measured using an appropriate meter and the result is less than the release criteria with the location clearly marked on the map.

Signature: Paul Madairy

Remarks:

Site: Incyte Genomics Building: 115 Lab/Room: 84

Start Date: 09/03/03 Finish Date: 09/03/03

Surveyor: Walter Wiencek Surveyor: Paul Madairy

Area Survey Results			*Wipe Test*		*β Direct*			*β Scan*					*γ Scan*				x-Rate
Wipe Number	Surface	Location	β dpm/100 cm^2	I-125 dpm/100 cm^2	Survey Meter #	Gross cpm/100 cm^2	dpm/100 cm^2 C-14	Survey Meter #	Grid No.	High cpm/100 cm^2	Average cpm/100 cm^2	Average dpm/100 cm^2 C-14	Survey Meter #	High cpm	Avg cpm	Average dpm/100 cm^2 I-125	Gross µRem/hr
1	Linoleum	Floor	<100	<100	2	565	<MDCR	4		1722	1412	<MDCR	6	160	100	<MDCR	5
2	Linoleum	Floor	<100	<100	2	572	<MDCR	4		1566	1340	<MDCR	6	160	140	<MDCR	
3	Linoleum	Floor	<100	<100	2	564	<MDCR	4		1528	1322	<MDCR	6	160	140	<MDCR	
4	Linoleum	Floor	<100	<100	2	522	<MDCR	4		1526	1278	<MDCR	6	140	100	<MDCR	
5	Linoleum	Floor	<100	<100	2	552	<MDCR	4		2050	1566	<MDCR	6	140	100	<MDCR	5
6	Linoleum	Floor	<100	<100	2	591	<MDCR	4		1508	1273	<MDCR	6	160	100	<MDCR	
7	Drywall	Wall	<100	<100	1	438	<MDCR	1		472	420	<MDCR	6	100	60	<MDCR	
8	Drywall	Wall	<100	<100	1	408	<MDCR	1		468	423	<MDCR	6	100	60	<MDCR	
9	Drywall	Wall	<100	<100	1	439	<MDCR	1		509	460	<MDCR	6	100	60	<MDCR	
10	Drywall	Wall	<100	<100	1	438	<MDCR	1		477	433	<MDCR	6	100	60	<MDCR	
11	Drywall	Wall	<100	<100	1	437	<MDCR	1		486	450	<MDCR	6	100	60	<MDCR	4
12	Drywall	Wall	<100	<100	1	444	<MDCR	1		496	451	<MDCR	6	100	60	<MDCR	
13	Drywall	Wall	<100	<100	1	546	<MDCR	1		608	541	<MDCR	6	100	60	<MDCR	
14	Metal	Door	<100	<100	1	511	<MDCR	1		555	526	<MDCR	6	100	60	<MDCR	
15	Lglass	Glass	<100	<100	1	456	<MDCR	1		483	446	<MDCR	6	100	60	<MDCR	
16	Drywall	Wall	<100	<100	1	376	<MDCR	1		423	384	<MDCR	6	100	60	<MDCR	
17	Corian	Benchtop	<100	<100	1	521	<MDCR	1		556	531	<MDCR	6	100	60	<MDCR	
18	Corian	Benchtop	<100	<100	1	550	<MDCR	1		618	566	<MDCR	6	100	60	<MDCR	
19	Corian	Benchtop	<100	<100	1	486	<MDCR	1		498	451	<MDCR	6	100	60	<MDCR	
20	Corian	Benchtop	<100	<100	1	528	<MDCR	1		540	523	<MDCR	6	100	60	<MDCR	
21	Corian	Benchtop	<100	<100	1	417	<MDCR	1		480	439	<MDCR	6	100	60	<MDCR	4
22	Corian	Benchtop	<100	<100	1	462	<MDCR	1		489	423	<MDCR	6	100	60	<MDCR	
23	Corian	Benchtop	<100	<100	1	636	<MDCR	1		650	601	<MDCR	6	100	60	<MDCR	
24	Corian	Benchtop	<100	<100	1	450	<MDCR	1		487	437	<MDCR	6	100	60	<MDCR	
25	Metal	Cabinet	<100	<100	1	524	<MDCR	1		615	528	<MDCR	6	100	60	<MDCR	
26	Corian	Shelves	<100	<100	1	473	<MDCR	1		494	463	<MDCR	6	100	60	<MDCR	
27	Corian	Shelves	<100	<100	1	480	<MDCR	1		532	501	<MDCR	6	100	60	<MDCR	
28	Corian	Shelves	<100	<100	1	500	<MDCR	1		550	521	<MDCR	6	100	60	<MDCR	
29	Corian	Shelves	<100	<100	1	535	<MDCR	1		553	525	<MDCR	6	100	60	<MDCR	
30	Wood	Cabinet	<100	<100	1	524	<MDCR	1		551	498	<MDCR	6	100	60	<MDCR	

Site: Incyte Genomics Building: 115 Lab/Room: 84

Start Date: 09/03/03 Finish Date: 09/03/03

Surveyor: Walter Wiencek Surveyor: Paul Madairy

Area Survey Results			*Wipe Test*		*β Direct*			*β Scan*					*γ Scan*				x-Rate
Wipe Number	Surface	Location	β dpm/100 cm^2	I-125 dpm/100 cm^2	Survey Meter #	Gross cpm/100 cm^2	dpm/100 cm^2 C-14	Survey Meter #	Grid No.	High cpm/100 cm^2	Average cpm/100 cm^2	Average dpm/100 cm^2 C-14	Survey Meter #	High cpm	Avg cpm	Average dpm/100 cm^2 I-125	Gross µRem/hr
31	Metal	Cabinet	<100	<100	1	444	<MDCR	1		467	419	<MDCR	6	100	60	<MDCR	3
32	Metal	Bench Drawer	<100	<100	1	449	<MDCR	1		513	471	<MDCR	6	100	60	<MDCR	
33	Metal	Bench Drawer	<100	<100	1	443	<MDCR	1		485	437	<MDCR	6	100	60	<MDCR	
34	Metal	Bench Drawer	<100	<100	1	402	<MDCR	1		441	406	<MDCR	6	100	60	<MDCR	
35	Metal	Bench Drawer	<100	<100	1	501	<MDCR	1		517	486	<MDCR	6	100	60	<MDCR	
36	Metal	Bench Drawer	<100	<100	1	436	<MDCR	1		483	442	<MDCR	6	100	60	<MDCR	
37	Metal	Bench Drawer	<100	<100	1	485	<MDCR	1		499	446	<MDCR	6	100	60	<MDCR	
38	Metal	Bench Drawer	<100	<100	1	416	<MDCR	1		458	420	<MDCR	6	100	60	<MDCR	
39	Metal	Bench Drawer	<100	<100	1	393	<MDCR	1		472	401	<MDCR	6	100	60	<MDCR	
40	Metal	Bench Drawer	<100	<100	1	476	<MDCR	1		510	481	<MDCR	6	100	60	<MDCR	
41	Metal	Bench Drawer	<100	<100	1	408	<MDCR	1		477	423	<MDCR	6	100	60	<MDCR	3
42	Metal	Bench Drawer	<100	<100	1	434	<MDCR	1		461	422	<MDCR	6	100	60	<MDCR	
43	Metal	Bench Drawer	<100	<100	1	458	<MDCR	1		480	449	<MDCR	6	100	60	<MDCR	
44	Metal	Bench Drawer	<100	<100	1	409	<MDCR	1		472	421	<MDCR	6	100	60	<MDCR	
45	Metal	Bench Drawer	<100	<100	1	474	<MDCR	1		509	461	<MDCR	6	100	60	<MDCR	
46	Metal	Bench Drawer	<100	<100	1	471	<MDCR	1		506	459	<MDCR	6	100	60	<MDCR	
47	Metal	Bench Drawer	<100	<100	1	440	<MDCR	1		553	471	<MDCR	6	100	60	<MDCR	
48	Metal	Bench Drawer	<100	<100	1	480	<MDCR	1		505	475	<MDCR	6	100	60	<MDCR	
49	Metal	Bench Drawer	<100	<100	1	512	<MDCR	1		531	492	<MDCR	6	100	60	<MDCR	
50	Metal	Bench Drawer	<100	<100	1	468	<MDCR	1		502	450	<MDCR	6	100	60	<MDCR	
51	Metal	Bench Drawer	<100	<100	1	527	<MDCR	1		549	516	<MDCR	6	100	60	<MDCR	6
52	Metal	Bench Drawer	<100	<100	1	505	<MDCR	1		528	481	<MDCR	6	100	60	<MDCR	
53	Metal	Bench Drawer	<100	<100	1	502	<MDCR	1		540	496	<MDCR	6	100	60	<MDCR	5
54	Metal	Bench Drawer	<100	<100	1	508	<MDCR	1		552	502	<MDCR	6	100	60	<MDCR	
55	Metal	Bench Drawer	<100	<100	1	480	<MDCR	1		536	480	<MDCR	6	100	60	<MDCR	
56	Metal	Bench Drawer	<100	<100	1	503	<MDCR	1		538	486	<MDCR	6	100	60	<MDCR	3
57	Metal	Bench Drawer	<100	<100	1	468	<MDCR	1		513	425	<MDCR	6	100	60	<MDCR	
58	Metal	Door	<100	<100	1	425	<MDCR	1		448	417	<MDCR	6	100	60	<MDCR	
59	Metal	Door	<100	<100	1	380	<MDCR	1		452	415	<MDCR	6	100	60	<MDCR	
60	Metal	Door	<100	<100	1	413	<MDCR	1		471	412	<MDCR	6	100	60	<MDCR	

Site: Incyte Genomics Building: 115 Lab/Room: 84

Start Date: 09/03/03 Finish Date: 09/03/03

Surveyor: Walter Wiencek Surveyor: Paul Madairy

Area Survey Results			*Wipe Test*		*β Direct*			*β Scan*					*γ Scan*				x-Rate
Wipe Number	Surface	Location	β dpm/100 cm²	I-125 dpm/100 cm²	Survey Meter #	Gross cpm/100 cm²	dpm/100 cm² C-14	Survey Meter #	Grid No.	High cpm/100 cm²	Average cpm/100 cm²	Average dpm/100 cm² C-14	Survey Meter #	High cpm	Avg cpm	Average dpm/100 cm² I-125	Gross µRem/hr
61	Metal	Sink	<100	<100	1	469	<MDCR	1		512	466	<MDCR	6	100	60	<MDCR	
62	Metal	Sink Drain Swab	<100	<100	1	432	<MDCR						6	100	60	<MDCR	4
63	Metal	Piping	<100	<100	1	392	<MDCR	1		417	393	<MDCR	6	100	60	<MDCR	
64	Metal	Ceiling Vent	<100	<100	1	492	<MDCR	1		547	478	<MDCR	6	100	60	<MDCR	
65	Metal	Ceiling Vent	<100	<100	1	496	<MDCR	1		509	497	<MDCR	6	100	60	<MDCR	4
66	Metal	Ceiling Vent	<100	<100	1	527	<MDCR	1		561	528	<MDCR	6	100	60	<MDCR	
67	Metal	Ceiling Vent	<100	<100	1	501	<MDCR	1		533	484	<MDCR	6	100	60	<MDCR	
68	Metal	Ceiling Vent	<100	<100	1	494	<MDCR	1		562	497	<MDCR	6	100	60	<MDCR	
69	Metal	Ceiling Vent	<100	<100	1	469	<MDCR	1		500	452	<MDCR	6	100	60	<MDCR	
70	Linoleum	Floor	<100	<100	2	574	<MDCR	4		1482	1395	<MDCR	6	160	100	<MDCR	3
71	Linoleum	Floor	<100	<100	2	626	<MDCR	4		1503	1297	<MDCR	6	140	100	<MDCR	
72	Linoleum	Floor	<100	<100	2	531	<MDCR	4		1397	1252	<MDCR	6	160	140	<MDCR	
73	Linoleum	Floor	<100	<100	2	620	<MDCR	4		1412	1286	<MDCR	6	160	140	<MDCR	
74	Linoleum	Floor	<100	<100	2	625	<MDCR	4		1673	1315	<MDCR	6	160	140	<MDCR	
75	Linoleum	Floor	<100	<100	2	572	<MDCR	4		1635	1368	<MDCR	6	140	100	<MDCR	
76	Linoleum	Floor	<100	<100	2	547	<MDCR	4		1539	1286	<MDCR	6	180	140	<MDCR	
77	Linoleum	Floor	<100	<100	2	4984	22243	4		3137	2122	5081	6	140	100	<MDCR	4
78	Linoleum	Floor	<100	<100	2	2113	7888	4		3712	2029	4499	6	140	100	<MDCR	4
79	Linoleum	Floor	<100	<100	2	2728	10963	4		3450	1893	3649	6	140	100	<MDCR	5
80	Linoleum	Floor	<100	<100	2	596	<MDCR	4		1649	1376	<MDCR	6	140	100	<MDCR	

Linoleum tile for wipe and direct numbers 77, 78, and 79 was removed and disposed of as radioactive waste.

Survey Meter Information

Site: Incyte Genomics Building: 115 Lab/Room: 84

	Meter 1		Meter 2		Meter 3		Meter 4		Meter 5	
Date:	9/3/2003		9/3/2003		9/3/2003		9/3/2003		9/3/2003	
Make:	Ludlum		Ludlum		Ludlum		Ludlum		Bicron	
Model:	2221		2221		2221		2221		MicroRem	
SN:	174947		174947		174947		108857		B694G	
Probe Make:	Ludlum		Ludlum		Ludlum		Ludlum		NA	
Probe Model:	43-68		43-68		43-68		43-37		NA	
Probe SN:	118629		118629		118629		074969		NA	
Probe Area (cm^2):	100		100		100		425		NA	
Next Cal. Date:	1/24/2004		1/24/2004		1/24/2004		1/24/2004		1/25/2004	
Background Surface Material	Air		Linoleum		Concrete		Linoleum		Air	
Background(c)-Time(Min):	4610	10	5355	10	5870	10	13091	10	4	
CS Isotope - Activity(µCi):	C-14		C-14		C-14		C-14		NA	NA
CS Source(cpm) - 2σ Check	37112	Yes	37112	Yes	37112	Yes	23094	Yes	NA	NA
L_c, L_d (Counts)	50	103	54	111	56	116	84	171	NA	NA
Direct MDC C-14, Scan MDC C-14 (dpm/100cm^2)	514	4883	553	5536	578	11964	252	3527	NA	NA
MDCR (With Background; cpm/100cm^2):	691		783		846		1696		NA	
Efficiency, Isotope:	20.0%	C-14	20.0%	C-14	20.0%	C-14	16.0%	C-14	NA	NA

Please See MARSSIM Chapter 6 for a more detailed explanation of equations.

Lc= Critical Detection Level
Ld= a priori Detection limit
MDC= Minimum Detectable Concentration
MDCR= Minimum Detectable Count Rate

$$\text{Direct MDC} = \frac{3+4.65*SQRT(B)}{T*\varepsilon_t*A*C}$$

$$\text{Scan MDC} = \frac{MDCR}{SQRT(E_{hf})*\varepsilon_t*\varepsilon_s*A*C}$$

$$MDCR = 1.38*(SQRT(B/(T*60)))*60+(B/T)$$

B = Background Counts
T = Counting Time In Minutes
ε_t = Total Detector Efficiency in Counts/Disintegration
A = Physical Probe Area in cm^2
C = Other Constants and Factors When Needed
E_{hf} = Human Factor Efficiency
ε_s = Source Efficiency

Survey Meter Information

Site: Incyte Genomics Building: 115 Lab/Room: 84

	Meter 6		Meter 7		Meter 8	Meter 9	Meter 10
Date:	9/3/2003		9/3/2003				
Make:	Ludlum		Ludlum				
Model:	2360		2221				
SN:	170576		108857				
Probe Make:	Ludlum		Ludlum				
Probe Model:	44-3		43-37				
Probe SN:	023384		074969				
Probe Area (cm^2):	5		425				
Next Cal. Date:	1/29/2004		1/24/2004				
Background Surface Material	Air		Concrete				
Background(c)-Time(Min):	791	10	14382	10			
Isotope - Activity(µCi):	Sr-90		C-14				
Source(cpm) - 2σ Check	199445	Yes	23094	Yes			
L_c, L_d (Counts)	21	44	88	179			
Direct MDC C-14, Scan MDC C-14 (dpm/100cm^2)	4436	24631	264	7668			
MDCR (With Background; cpm/100cm^2):	174		1844				
Efficiency, Isotope:	20.0%	I-125	16.0%	I-125			

Please See MARSSIM Chapter 6 for a more detailed explanation of equations.

Lc= Critical Detection Level
Ld= a priori Detection limit
MDC= Minimum Detectable Concentration
MDCR= Minimum Detectable Count Rate

$$\text{Direct MDC} = \frac{3+4.65*SQRT(B)}{T*\varepsilon_t*A*C}$$

$$\text{Scan MDC} = \frac{MDCR}{SQRT(E_{hf})*\varepsilon_t*\varepsilon_s*A*C}$$

$$MDCR = 1.38*(SQRT(B/(T*60)))*60+(B/T)$$

B = Background Counts
T = Counting Time In Minutes
ε_t = Total Detector Efficiency in Counts/Disintegration
A = Physical Probe Area in cm^2
C = Other Constants and Factors When Needed
E_{hf} = Human Factor Efficiency
ε_s = Source Efficiency

Radiological Decommissioning Survey	Incyte Genomics 1090 Elkton Rd	RSO, Inc.		
		Building 115	Room 84	Lab Type

Surveyors	Name: Walter Wiencek	Name Paul Madairy	Date 9/3/2003
Contact	Name: John Nicholson	Phone No. 1-302-275-2550	

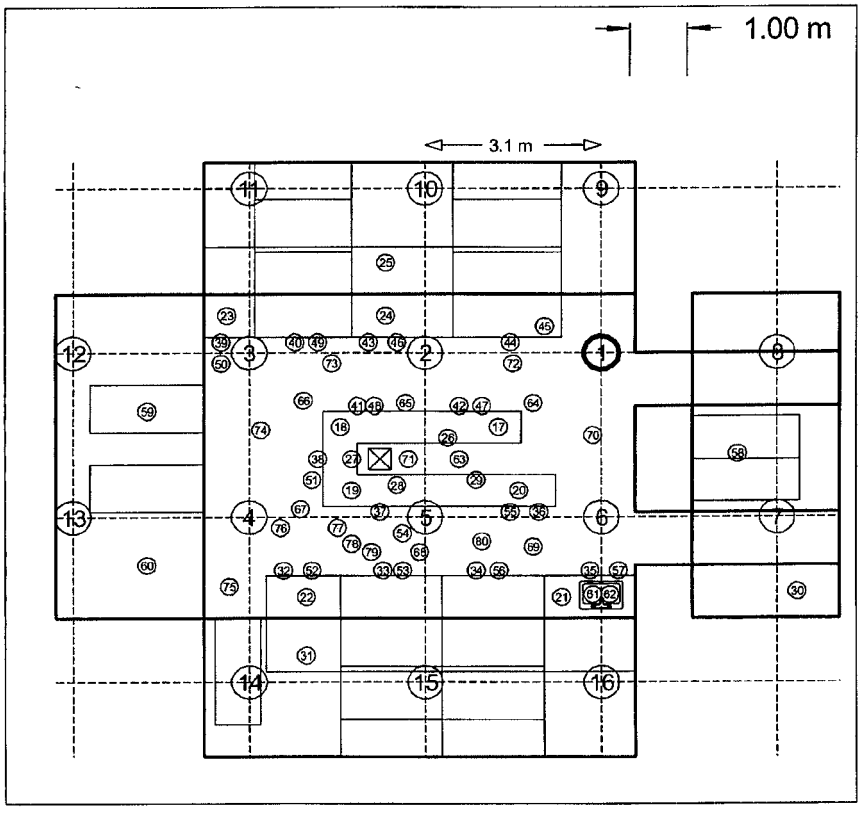

Isotopes And Wipe Results

3-H	x		125-I	x
14-C	x		Other	
35-S			Other	
32-P			Other	
33-P			Other	

Total Wipes: 80

Wipe Results All <200 dpm/ 100 cm^2?

Yes	X	No	

If No

Wipe No.	Result in dpm / 100 cm^2

Please mark "x" when completed.

x	1. Data sheet is completed with all appropriate data.
x	2. The meter sheet contains all of the meters used for this survey with all of their efficiencies, MDC's, & MDCR's.
x	3. The above map is clear and accurate with all wipe locations marked with a circled number.
x	4. The wipe results are attached with all results less than release criteria. If no please explain in the remarks section.
x	5. All direct measurements are less than the MDCR or less than the release criteria (If above MDCR).
x	6. Exposure is measured using an appropriate meter and the result is less than the release criteria with the location clearly marked on the map.

Signature: Paul Madairy

Remarks:

Linoleum tile for wipe and direct numbers 77, 78, and 79 was removed and disposed of as radioactive waste.

Site: Incyte Genomics Building: 115 Lab/Room: 84

Start Date: 09/03/03 Finish Date: 09/03/03

Surveyor: Walter Wiencek Surveyor: Paul Madairy

Fume Hood Survey Results			*Wipe Test*		*β Direct*			*β Scan*					*γ Scan*				x-Rate
Wipe Number	Surface	Location	β dpm/100 cm²	I-125 dpm/100 cm²	Survey Meter #	Gross cpm/100 cm²	dpm/100 cm² C-14	Survey Meter #	Grid No.	High cpm/100 cm²	Average cpm/100 cm²	Average dpm/100 cm² C-14	Survey Meter #	High cpm	Avg cpm	Average dpm/100 cm² I-125	Gross µRem/hr
FH 84 L1																	
1	Corian	Inside Bottom	<100	<100	1	543	<MDCR	1		572	532	<MDCR	4	80	40	<MDCR	4
2	Corian	Inside Bottom	<100	<100	1	486	<MDCR	1		571	531	<MDCR	4	80	40	<MDCR	
3	Corian	Inside Left	<100	<100	1	460	<MDCR	1		534	485	<MDCR	4	80	40	<MDCR	
4	Corian	Inside Right	<100	<100	1	481	<MDCR	1		503	452	<MDCR	4	80	40	<MDCR	
5	Corian	Top / Vent L	<100	<100	1	495	<MDCR	1		550	509	<MDCR	4	80	40	<MDCR	
6	Corian	Top / Vent R	<100	<100	1	560	<MDCR	1		622	579	<MDCR	4	80	40	<MDCR	
7	Corian	Back	<100	<100	1	510	<MDCR	1		602	532	<MDCR	4	80	40	<MDCR	
8	Metal	Lip	<100	<100	1	568	<MDCR	1		613	582	<MDCR	4	80	40	<MDCR	
9	Glass	Sashe	<100	<100	1	535	<MDCR	1		580	543	<MDCR	4	80	40	<MDCR	
10	Metal	Top Outside	<100	<100	1	542	<MDCR	1		623	544	<MDCR	4	80	40	<MDCR	
11	Corian	Drain Swab	<100	<100	1	574	<MDCR						4	80	40	<MDCR	4
1	Corian	Inside Bottom	<100	<100	1	620	<MDCR	1		633	595	<MDCR	4	80	40	<MDCR	4
2	Corian	Inside Bottom	<100	<100	1	617	<MDCR	1		650	606	<MDCR	4	80	40	<MDCR	
3	Corian	Inside Left	<100	<100	1	583	<MDCR	1		600	553	<MDCR	4	80	40	<MDCR	
4	Corian	Inside Right	<100	<100	1	500	<MDCR	1		531	500	<MDCR	4	80	40	<MDCR	
5	Corian	Top / Vent L	<100	<100	1	577	<MDCR	1		624	578	<MDCR	4	80	40	<MDCR	
6	Corian	Top / Vent R	<100	<100	1	594	<MDCR	1		637	592	<MDCR	4	80	40	<MDCR	
7	Corian	Back	<100	<100	1	495	<MDCR	1		561	502	<MDCR	4	80	40	<MDCR	
8	Metal	Lip	<100	<100	1	610	<MDCR	1		631	554	<MDCR	4	80	40	<MDCR	
9	Glass	Sashe	<100	<100	1	552	<MDCR	1		584	531	<MDCR	4	80	40	<MDCR	
10	Metal	Top Outside	<100	<100	1	567	<MDCR	1		604	576	<MDCR	4	80	40	<MDCR	
11	Corian	Drain Swab	<100	<100	1	575	<MDCR						4	80	40	<MDCR	4

Radiological Decommissioning Survey	Incyte Genomics 1090 Elkton Rd	RSO, Inc. Building: 115 / Room: 84 / Lab Type:

Surveyors	Name: Walter Wiencek	Name: Paul Madairy	Date: 9/3/2003
Contact	Name: John Nicholson	Phone No.: 1-302-275-2550	Fume Hood 84 L1

FMS 25

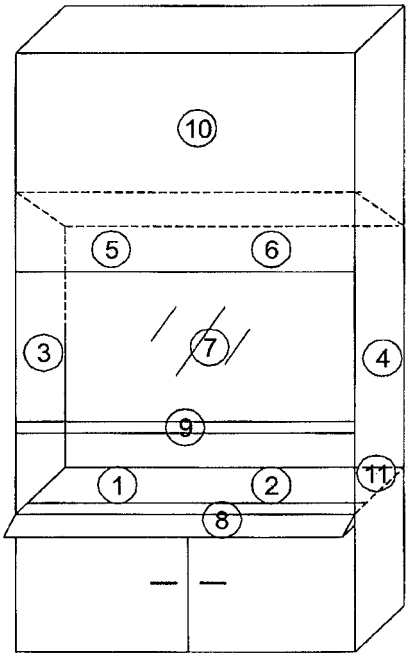

Total Wipes: 11

Wipe Results All <300 dpm/ 100 cm²?

Yes	X	No	

If No

Wipe No.	Result in dpm / 100 cm²

Please use an "x" for completed.

X	1. Data sheet is completed with all appropriate data.
X	2. The meter sheet contains all of the meters used for this survey with all of their efficiencies, MDC's, & MDCR's.
X	3. The above map is clear and accurate with all wipe locations marked with a circled number.
X	4. The wipe results are attached with all results less than release criteria. If no please explain in the remarks section.
X	5. All direct measurements are less than the MDCR or less than the release criteria (If above MDCR).
X	6. Exposure is measured using an appropriate meter and the result is less than the release criteria with the location clearly marked on the map.

Signature: Paul Madairy

Remarks:

Radiological Decommissioning Survey	Incyte Genomics 1090 Elkton Rd	RSO, Inc. Building: 115 / Room: 84 / Lab Type:

Surveyors	Name: Walter Wiencek	Name: Paul Madairy	Date: 9/3/2003
Contact	Name: John Nicholson	Phone No.: 1-302-275-2550	Fume Hood 84 L2

FMS 26

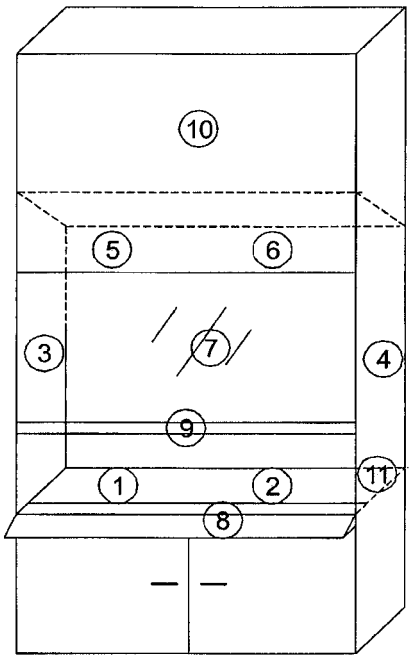

Total Wipes: 11

Wipe Results All <300 dpm/ 100 cm²?

Yes	X	No	

If No

Wipe No.	Result in dpm / 100 cm²

Please use an "x" for completed.

X	1. Data sheet is completed with all appropriate data.
X	2. The meter sheet contains all of the meters used for this survey with all of their efficiencies, MDC's, & MDCR's.
X	3. The above map is clear and accurate with all wipe locations marked with a circled number.
X	4. The wipe results are attached with all results less than release criteria. If no please explain in the remarks section.
X	5. All direct measurements are less than the MDCR or less than the release criteria (If above MDCR).
X	6. Exposure is measured using an appropriate meter and the result is less than the release criteria with the location clearly marked on the map.

Signature: Paul Madairy

Remarks:

Site: Incyte Genomics Building: 115 Lab/Room: 84

Start Date: 09/03/03 Finish Date: 09/03/03

Surveyor: Walter Wiencek Surveyor: Paul Madairy

Bio Hood Survey Results			*Wipe Test*		*β Direct*			*β Scan*					*γ Scan*				x-Rate
Wipe Number	Surface	Location	β dpm/100 cm²	I-125 dpm/100 cm²	Survey Meter #	Gross cpm/100 cm²	dpm/100 cm² C-14	Survey Meter #	Grid No.	High cpm/100 cm²	Average cpm/100 cm²	Average dpm/100 cm² C-14	Survey Meter #	High cpm	Avg cpm	Average dpm/100 cm² I-125	Gross µRem/hr
FMS 27																	
1	Metal	Inside Bottom	<100	<100	1	598	<MDCR	1		615	574	<MDCR	4	80	60	<MDCR	7
2	Metal	Inside Bottom	<100	<100	1	565	<MDCR	1		622	579	<MDCR	4	80	60	<MDCR	
3	Metal	Inside Left	<100	<100	1	522	<MDCR	1		556	507	<MDCR	4	80	60	<MDCR	
4	Metal	Inside Right	<100	<100	1	559	<MDCR	1		640	543	<MDCR	4	80	60	<MDCR	
5	Metal	Inside Top	<100	<100	1	588	<MDCR	1		652	603	<MDCR	4	80	60	<MDCR	
6	Metal	Inside Top	<100	<100	1	603	<MDCR	1		644	617	<MDCR	4	80	60	<MDCR	
7	Metal	Inside Back	<100	<100	1	578	<MDCR	1		623	568	<MDCR	4	80	60	<MDCR	
8	Metal	Apron	<100	<100	1	580	<MDCR	1		637	582	<MDCR	4	80	60	<MDCR	
9	Glass	Sashe	<100	<100	1	572	<MDCR	1		653	581	<MDCR	4	80	60	<MDCR	
10	Metal	Outside Front	<100	<100	1	587	<MDCR	1		655	580	<MDCR	4	80	60	<MDCR	7
11	Metal	Swab	<100	<100	1	581	<MDCR										
FMS 28																	
1	Metal	Inside Bottom	<100	<100	1	476	<MDCR	1		481	410	<MDCR	4	80	60	<MDCR	5
2	Metal	Inside Bottom	<100	<100	1	421	<MDCR	1		459	423	<MDCR	4	80	60	<MDCR	
3	Metal	Inside Left	<100	<100	1	429	<MDCR	1		501	449	<MDCR	4	80	60	<MDCR	
4	Metal	Inside Right	<100	<100	1	434	<MDCR	1		486	443	<MDCR	4	80	60	<MDCR	
5	Metal	Inside Top	<100	<100	1	471	<MDCR	1		505	456	<MDCR	4	80	60	<MDCR	
6	Metal	Inside Top	<100	<100	1	443	<MDCR	1		477	432	<MDCR	4	80	60	<MDCR	
7	Metal	Inside Back	<100	<100	1	420	<MDCR	1		509	438	<MDCR	4	80	60	<MDCR	
8	Metal	Apron	<100	<100	1	510	<MDCR	1		538	493	<MDCR	4	80	60	<MDCR	
9	Glass	Sashe	<100	<100	1	497	<MDCR	1		552	478	<MDCR	4	80	60	<MDCR	
10	Metal	Outside Front	<100	<100	1	564	<MDCR	1		623	579	<MDCR	4	80	60	<MDCR	
11	Metal	Swab	<100	<100	1	496	<MDCR										4

Radiological Decommissioning Survey	Incyte Genomics 1090 Elkton Rd	RSO, Inc.		
		Building 115	Room 84	Lab Type

Surveyors	Name: Walter Wiencek	Name Paul Madairy	Date 9/3/2003
Contact	Name: John Nicholson	Phone No. 1-302-275-2550	Bio Hood C2 FMS 27

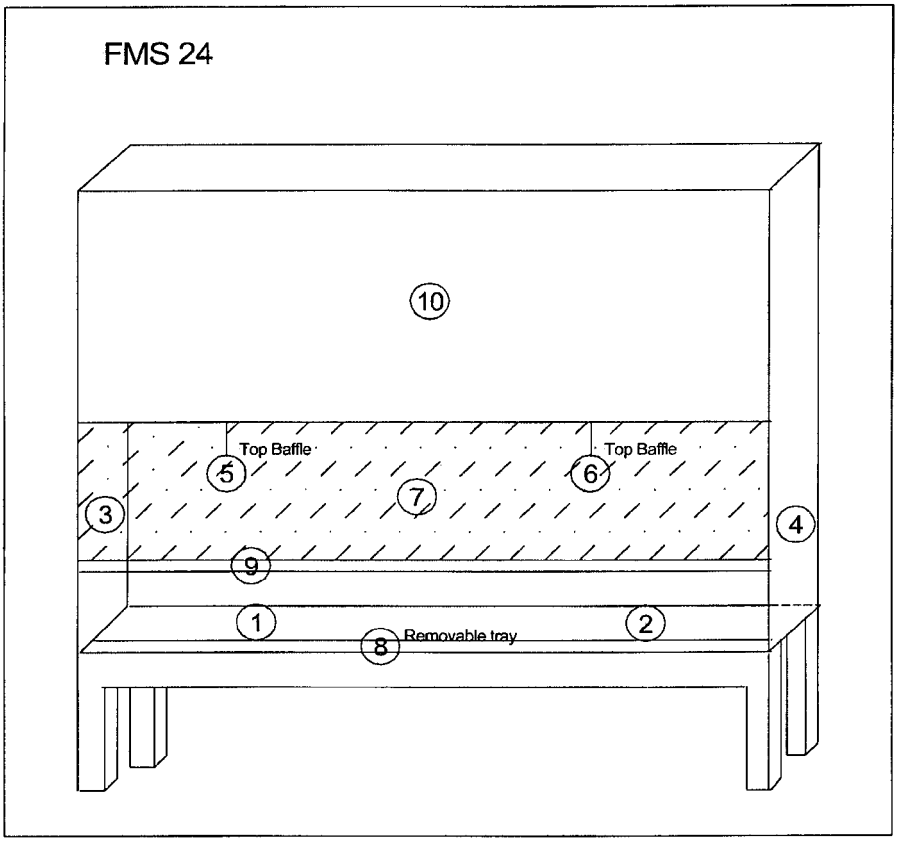

Total Wipes: 11			
Wipe Results All <300 dpm/ 100 cm²?			
Yes	X	No	
If No			
Wipe No.	Result in dpm / 100 cm²		

Please use an "x" for completed.

x	1. Data sheet is completed with all appropriate data.
x	2. The meter sheet contains all of the meters used for this survey with all of their efficiencies, MDC's, & MDCR's.
x	3. The above map is clear and accurate with all wipe locations marked with a circled number.
x	4. The wipe results are attached with all results less than release criteria. If no please explain in the remarks section.
x	5. All direct measurements are less than the MDCR or less than the release criteria (If above MDCR).
x	6. Exposure is measured using an appropriate meter and the result is less than the release criteria with the location clearly marked on the map.

Signature: Paul Madairy

Remarks:

Radiological Decommissioning Survey	Incyte Genomics 1090 Elkton Rd	RSO, Inc. Building: 115 / Room: 84 / Lab Type:

Surveyors	Name: Walter Wiencek	Name: Paul Madairy	Date: 9/3/2003
Contact	Name: John Nicholson	Phone No. 1-302-275-2550	Bio Hood C3 FMS 28

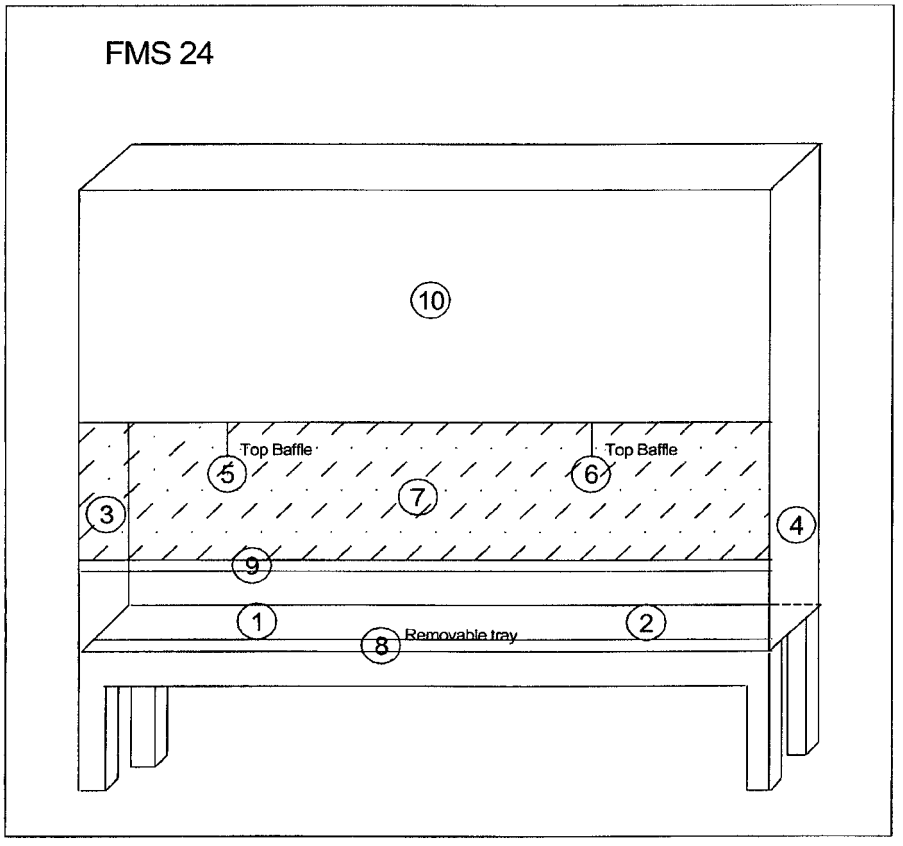

Total Wipes: 11

Wipe Results All <300 dpm/ 100 cm²?

Yes	X	No	

If No

Wipe No.	Result in dpm / 100 cm²

Please use an "x" for completed.

x	1. Data sheet is completed with all appropriate data.
x	2. The meter sheet contains all of the meters used for this survey with all of their efficiencies, MDC's, & MDCR's.
x	3. The above map is clear and accurate with all wipe locations marked with a circled number.
x	4. The wipe results are attached with all results less than release criteria. If no please explain in the remarks section.
x	5. All direct measurements are less than the MDCR or less than the release criteria (If above MDCR).
x	6. Exposure is measured using an appropriate meter and the result is less than the release criteria with the location clearly marked on the map.

Signature: Paul Madairy

Remarks:

Site: Incyte Genomics Building: 115 Lab/Room: 85

Start Date: 09/09/03 Finish Date: 09/10/03

Surveyor: Walter Wiencek Surveyor: Paul Madairy

Area Survey Results			*Wipe Test*		*β Direct*			*β Scan*					*γ Scan*				x-Rate
Wipe Number	Surface	Location	β dpm/100 cm^2	I-125 dpm/100 cm^2	Survey Meter #	Gross cpm/100 cm^2	dpm/100 cm^2 C-14	Survey Meter #	Grid No.	High cpm/100 cm^2	Average cpm/100 cm^2	Average dpm/100 cm^2 C-14	Survey Meter #	High cpm	Avg cpm	Average dpm/100 cm^2 I-125	Gross µRem/hr
1	Linoleum	Floor	<100	<100	3	340	<MDCR	1		1247	1091	<MDCR	6	120	80	<MDCR	4
2	Corian	Benchtop	<100	<100	4	388	<MDCR	4		437	404	<MDCR	6	120	80	<MDCR	
3	Corian	Benchtop	<100	<100	4	383	<MDCR	4		416	390	<MDCR	6	120	80	<MDCR	
4	Corian	Benchtop	<100	<100	4	422	<MDCR	4		461	421	<MDCR	6	120	80	<MDCR	
5	Corian	Benchtop	<100	<100	4	428	<MDCR	4		461	427	<MDCR	6	120	80	<MDCR	4
6	Corian	Benchtop	<100	<100	4	426	<MDCR	4		439	406	<MDCR	6	120	80	<MDCR	
7	Linoleum	Floor	<100	<100	3	399	<MDCR	1		1248	1082	<MDCR	6	120	80	<MDCR	
8	Drywall	Wall	<100	<100	4	392	<MDCR	4		437	399	<MDCR	6	120	80	<MDCR	
9	Metal	Hood	<100	<100	4	422	<MDCR	4		472	418	<MDCR	6	120	80	<MDCR	3
10	Drywall	Wall	<100	<100	4	433	<MDCR	4		439	416	<MDCR	6	120	80	<MDCR	
11	Metal	Hood	<100	<100	4	377	<MDCR	4		437	397	<MDCR	6	120	80	<MDCR	
12	Drywall	Wall	<100	<100	4	428	<MDCR	4		442	410	<MDCR	6	120	80	<MDCR	
13	Linoleum	Floor	<100	<100	3	379	<MDCR	1		1096	929	<MDCR	6	120	80	<MDCR	
14	Linoleum	Floor	<100	<100	3	338	<MDCR	1		1187	1060	<MDCR	6	120	80	<MDCR	4
15	Metal	Door	<100	<100	4	382	<MDCR	4		415	383	<MDCR	6	120	80	<MDCR	

Survey Meter Information

Site: Incyte Genomics Building: 115 Lab/Room: 85

	Meter 1		Meter 2		Meter 3		Meter 4		Meter 5	
Date:	9/9/2003		9/9/2003		9/9/2003		9/10/2003		9/9/2003	
Make:	Ludlum		Ludlum		Ludlum		Ludlum		Bicron	
Model:	2221		2221		2221		2221		MicroRem	
SN:	108857		174947		174947		174947		B694G	
Probe Make:	Ludlum		Ludlum		Ludlum		Ludlum		NA	
Probe Model:	43-37		43-68		43-68		43-68		NA	
Probe SN:	074969		118629		118629		118629		NA	
Probe Area (cm^2):	425		100		100		100		NA	
Next Cal. Date:	1/24/2004		1/24/2004		1/24/2004		1/24/2004		1/25/2004	
Background Surface Material	Linoleum		Air		Linoleum		Air		Air	
Background(c)-Time(Min):	12451	10	3401	10	4277	10	2997	10	3	
CS Isotope - Activity(μCi):	C-14		C-14		C-14		C-14		NA	NA
CS Source(cpm) - 2σ Check	23156	Yes	37131	Yes	37131	Yes	37098	Yes	NA	NA
L_c, L_d (Counts)	82	167	43	89	48	99	40	84	NA	NA
Direct MDC C-14, Scan MDC C-14 (dpm/100cm^2)	246	3374	444	3799	496	4587	418	3428	NA	NA
MDCR (With Background; cpm/100cm^2):	1622		537		649		485		NA	
Efficiency, Isotope:	16.0%	C-14	20.0%	C-14	20.0%	C-14	20.0%	C-14	NA	NA

Please See MARSSIM Chapter 6 for a more detailed explanation of equations.

Lc= Critical Detection Level
Ld= a priori Detection limit
MDC= Minimum Detectable Concentration
MDCR= Minimum Detectable Count Rate

Direct MDC= $\frac{3+4.65*SQRT(B)}{T*\varepsilon_t*A*C}$

Scan MDC= $\frac{MDCR}{SQRT(E_{hf})*\varepsilon_t*\varepsilon_s*A*C}$

MDCR= 1.38*(SQRT(B/(T*60)))*60+(B/T)

B = Background Counts
T = Counting Time In Minutes
ε_t = Total Detector Efficiency in Counts/Disintegration
A = Physical Probe Area in cm^2
C = Other Constants and Factors When Needed
E_{hf} = Human Factor Efficiency
ε_s = Source Efficiency

Survey Meter Information

Site: Incyte Genomics Building: 115 Lab/Room: 85

	Meter 6		Meter 7	Meter 8	Meter 9	Meter 10
Date:	9/3/2003					
Make:	Ludlum					
Model:	2360					
SN:	170576					
Probe Make:	Ludlum					
Probe Model:	44-3					
Probe SN:	023384					
Probe Area (cm^2):	5					
Next Cal. Date:	1/29/2004					
Background Surface Material	Air					
Background(c)-Time(Min):	919	10				
Isotope - Activity(μCi):	Sr-90					
Source(cpm) - 2σ Check	199851	Yes				
L_c, L_d (Counts)	22	48				
Direct MDC C-14, Scan MDC C-14 (dpm/100cm^2)	4758	27489				
MDCR (With Background; cpm/100cm^2):	194					
Efficiency, Isotope:	20.0%	I-125				

Please See MARSSIM Chapter 6 for a more detailed explanation of equations.

Lc= Critical Detection Level
Ld= a priori Detection limit
MDC= Minimum Detectable Concentration
MDCR= Minimum Detectable Count Rate

Direct MDC= $\frac{3+4.65*SQRT(B)}{T*\varepsilon_t*A*C}$

Scan MDC= $\frac{MDCR}{SQRT(E_{hf})*\varepsilon_t*\varepsilon_s*A*C}$

MDCR= 1.38*(SQRT(B/(T*60)))*60+(B/T)

B = Background Counts
T = Counting Time In Minutes
ε_t = Total Detector Efficiency in Counts/Disintegration
A = Physical Probe Area in cm^2
C = Other Constants and Factors When Needed
E_{hf} = Human Factor Efficiency
ε_s = Source Efficiency

Radiological Decommissioning Survey	Incyte Genomics 1090 Elkton Rd	RSO, Inc.		
		Building 115	Room 85	Lab Type

Surveyors	Name: Walter Wiencek	Name Paul Madairy	Date 9/9/2003
Contact	Name: John Nicholson	Phone No. 1-302-275-2550	

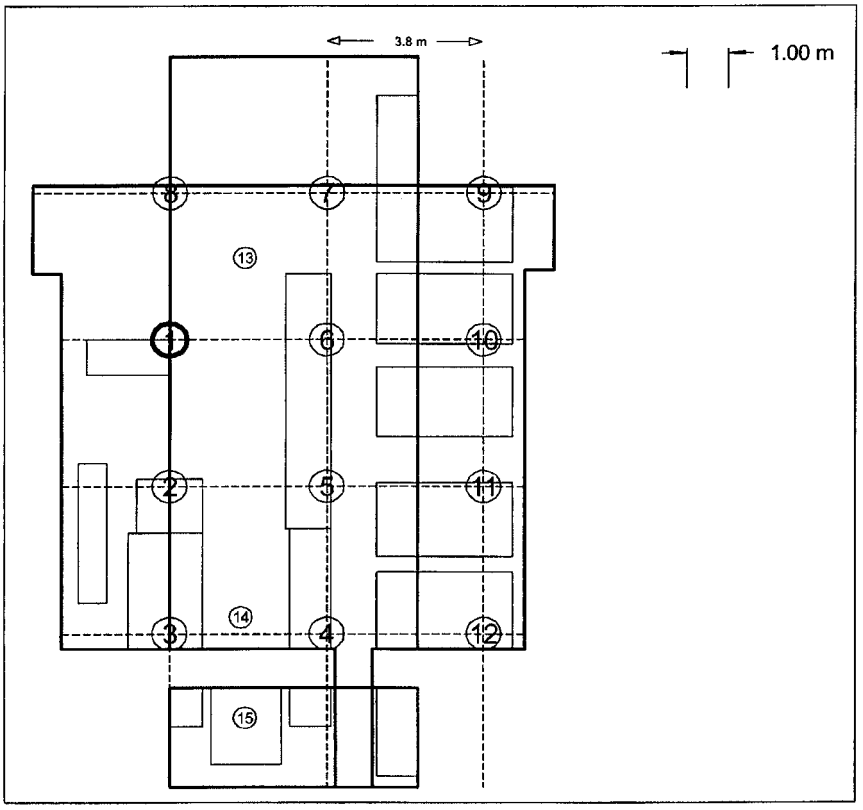

Isotopes And Wipe Results				
3-H			125-I	
14-C			Other	
35-S			Other	
32-P			Other	
33-P			Other	

Total Wipes: 15

Wipe Results All <200 dpm/ 100 cm^2?

Yes	X	No	

If No

Wipe No.	Result in dpm / 100 cm^2

Please mark "x" when completed.

x	1. Data sheet is completed with all appropriate data.
x	2. The meter sheet contains all of the meters used for this survey with all of their efficiencies, MDC's, & MDCR's.
x	3. The above map is clear and accurate with all wipe locations marked with a circled number.
x	4. The wipe results are attached with all results less than release criteria. If no please explain in the remarks section.
x	5. All direct measurements are less than the MDCR or less than the release criteria (If above MDCR).
x	6. Exposure is measured using an appropriate meter and the result is less than the release criteria with the location clearly marked on the map.

Signature: Paul Madairy

Remarks:

Site: Incyte Genomics Building: 115 Lab/Room: 86 / 87

Start Date: 09/09/03 Finish Date: 09/11/03

Surveyor: Walter Wiencek Surveyor: Paul Madairy

Area Survey Results			*Wipe Test*		*β Direct*			*β Scan*					*γ Scan*				x-Rate
Wipe Number	Surface	Location	β dpm/100 cm²	I-125 dpm/100 cm²	Survey Meter #	Gross cpm/100 cm²	dpm/100 cm² C-14	Survey Meter #	Grid No.	High cpm/100 cm²	Average cpm/100 cm²	Average dpm/100 cm² C-14	Survey Meter #	High cpm	Avg cpm	Average dpm/100 cm² I-125	Gross μRem/hr
1	Tile	Floor	<100	<100	7	434	<MDCR	2		937	912	<MDCR	4	140	80	<MDCR	4
2	Tile	Floor	<100	<100	7	298	<MDCR	2		953	902	<MDCR	4	140	80	<MDCR	
3	Tile	Floor	<100	<100	7	352	<MDCR	2		1068	936	<MDCR	4	140	80	<MDCR	
4	Tile	Floor	<100	<100	7	375	<MDCR	2		1002	918	<MDCR	4	140	80	<MDCR	
5	Tile	Floor	<100	<100	7	346	<MDCR	2		993	841	<MDCR	4	140	80	<MDCR	5
6	Tile	Floor	155	<100	7	333	<MDCR	2		1046	923	<MDCR	4	140	80	<MDCR	
7	Metal	Cabinet	<100	<100	12	282	<MDCR	12		344	288	<MDCR	4	140	80	<MDCR	
8	Metal	Cabinet	<100	<100	12	243	<MDCR	12		381	261	<MDCR	4	140	80	<MDCR	
9	Glass	Window	<100	<100	12	318	<MDCR	12		408	337	<MDCR	4	140	80	<MDCR	3
10	Glass	Window	<100	<100	12	472	<MDCR	12		496	420	<MDCR	4	140	80	<MDCR	
11	Metal	Door	<100	<100	12	426	<MDCR	12		521	453	<MDCR	4	140	80	<MDCR	
12	Drywall	Wall	<100	<100	12	456	<MDCR	12		528	448	<MDCR	4	140	80	<MDCR	
13	Tile	Floor	<100	<100	7	370	<MDCR	2		952	918	<MDCR	4	140	80	<MDCR	
14	Tile	Floor	<100	<100	7	355	<MDCR	2		966	911	<MDCR	4	140	80	<MDCR	4
15	Tile	Floor	<100	<100	7	340	<MDCR	2		1043	902	<MDCR	4	140	80	<MDCR	
16	Tile	Floor	<100	<100	7	309	<MDCR	2		989	845	<MDCR	4	140	80	<MDCR	
17	Tile	Floor	<100	<100	7	356	<MDCR	2		1058	938	<MDCR	4	140	80	<MDCR	
18	Tile	Floor	<100	<100	7	349	<MDCR	2		913	841	<MDCR	4	140	80	<MDCR	
19	Tile	Floor	<100	<100	7	346	<MDCR	2		976	862	<MDCR	4	140	80	<MDCR	5
20	Tile	Floor	<100	<100	7	398	<MDCR	2		994	883	<MDCR	4	140	80	<MDCR	
21	Tile	Floor	<100	<100	7	381	<MDCR	2		1165	1031	<MDCR	4	140	80	<MDCR	
22	Tile	Floor	<100	<100	7	358	<MDCR	2		1223	929	<MDCR	4	140	80	<MDCR	
23	Tile	Floor	<100	<100	7	349	<MDCR	2		1162	1021	<MDCR	4	140	80	<MDCR	
24	Tile	Floor	<100	<100	7	412	<MDCR	2		993	902	<MDCR	4	140	80	<MDCR	5
25	Tile	Floor	<100	<100	7	141	<MDCR	2		1115	1039	<MDCR	4	140	80	<MDCR	
26	Tile	Floor	<100	<100	7	325	<MDCR	2		1103	1000	<MDCR	4	140	80	<MDCR	
27	Tile	Floor	<100	<100	7	332	<MDCR	2		1147	997	<MDCR	4	140	80	<MDCR	
28	Tile	Floor	<100	<100	7	333	<MDCR	2		1067	942	<MDCR	4	140	80	<MDCR	
29	Tile	Floor	<100	<100	7	344	<MDCR	2		991	855	<MDCR	4	140	80	<MDCR	4
30	Corian	Benchtop	<100	<100	12	355	<MDCR	12		423	341	<MDCR	4	140	80	<MDCR	

Site: Incyte Genomics Building: 115 Lab/Room: 86 / 87

Start Date: 09/09/03 Finish Date: 09/11/03

Surveyor: Walter Wiencek Surveyor: Paul Madairy

Area Survey Results			*Wipe Test*		*β Direct*			*β Scan*					*γ Scan*				x-Rate
Wipe Number	Surface	Location	β dpm/100 cm²	I-125 dpm/100 cm²	Survey Meter #	Gross cpm/100 cm²	dpm/100 cm² C-14	Survey Meter #	Grid No.	High cpm/100 cm²	Average cpm/100 cm²	Average dpm/100 cm² C-14	Survey Meter #	High cpm	Avg cpm	Average dpm/100 cm² I-125	Gross μRem/hr
31	Corian	Benchtop	<100	<100	12	361	<MDCR	12		369	322	<MDCR	4	140	80	<MDCR	3
32	Corian	Benchtop	<100	<100	12	288	<MDCR	12		340	289	<MDCR	4	140	80	<MDCR	
33	Corian	Benchtop	<100	<100	12	387	<MDCR	12		462	380	<MDCR	4	140	80	<MDCR	
34	Corian	Benchtop	<100	<100	12	388	<MDCR	12		460	373	<MDCR	4	140	80	<MDCR	
35	Corian	Benchtop	<100	<100	12	451	<MDCR	12		505	443	<MDCR	4	140	80	<MDCR	4
36	Corian	Benchtop	<100	<100	12	468	<MDCR	12		515	456	<MDCR	4	140	80	<MDCR	
37	Corian	Benchtop	<100	<100	12	447	<MDCR	12		500	457	<MDCR	4	140	80	<MDCR	
38	Corian	Benchtop	<100	<100	12	467	<MDCR	12		491	451	<MDCR	4	140	80	<MDCR	
39	Corian	Benchtop	<100	<100	12	486	<MDCR	12		506	488	<MDCR	4	140	80	<MDCR	
40	Corian	Benchtop	<100	<100	12	471	<MDCR	12		476	443	<MDCR	4	140	80	<MDCR	3
41	Corian	Benchtop	<100	<100	15	499	<MDCR	15		540	516	<MDCR	4	140	80	<MDCR	
42	Corian	Benchtop	<100	<100	15	540	<MDCR	15		553	528	<MDCR	4	140	80	<MDCR	
43	Corian	Benchtop	<100	<100	15	544	<MDCR	15		614	558	<MDCR	4	140	80	<MDCR	
44	Corian	Benchtop	<100	<100	15	510	<MDCR	15		543	518	<MDCR	4	140	80	<MDCR	
45	Corian	Benchtop	<100	<100	15	528	<MDCR	15		561	531	<MDCR	4	140	80	<MDCR	4
46	Metal	Drawers	<100	<100	15	484	<MDCR	15		543	504	<MDCR	4	140	80	<MDCR	
47	Metal	Drawers	<100	<100	15	483	<MDCR	15		499	479	<MDCR	4	140	80	<MDCR	
48	Metal	Drawers	<100	<100	15	531	<MDCR	15		587	541	<MDCR	4	140	80	<MDCR	
49	Metal	Drawers	<100	<100	15	526	<MDCR	15		549	524	<MDCR	4	140	80	<MDCR	4
50	Metal	Drawers	<100	<100	15	518	<MDCR	15		547	527	<MDCR	4	140	80	<MDCR	
51	Metal	Drawers	<100	<100	12	443	<MDCR	12		491	422	<MDCR	4	140	80	<MDCR	
52	Metal	Drawers	<100	<100	12	409	<MDCR	12		478	421	<MDCR	4	140	80	<MDCR	
53	Metal	Drawers	<100	<100	12	406	<MDCR	12		478	410	<MDCR	4	140	80	<MDCR	
54	Metal	Drawers	<100	<100	12	411	<MDCR	12		468	396	<MDCR	4	140	80	<MDCR	3
55	Metal	Drawers	<100	<100	12	415	<MDCR	12		434	418	<MDCR	4	140	80	<MDCR	
56	Metal	Drawers	<100	<100	12	377	<MDCR	12		412	369	<MDCR	4	140	80	<MDCR	
57	Metal	Drawers	<100	<100	12	400	<MDCR	12		434	394	<MDCR	4	140	80	<MDCR	
58	Metal	Drawers	<100	<100	12	342	<MDCR	12		377	327	<MDCR	4	140	80	<MDCR	
59	Metal	Drawers	<100	<100	12	354	<MDCR	12		420	350	<MDCR	4	140	80	<MDCR	3
60	Metal	Drawers	<100	<100	12	415	<MDCR	12		458	406	<MDCR	4	140	80	<MDCR	

Site: Incyte Genomics Building: 115 Lab/Room: 86 / 87

Start Date: 09/09/03 Finish Date: 09/11/03

Surveyor: Walter Wiencek Surveyor: Paul Madairy

Area Survey Results			*Wipe Test*		*β Direct*			*β Scan*					*γ Scan*				x-Rate
Wipe Number	Surface	Location	β dpm/100 cm²	I-125 dpm/100 cm²	Survey Meter #	Gross cpm/100 cm²	dpm/100 cm² C-14	Survey Meter #	Grid No.	High cpm/100 cm²	Average cpm/100 cm²	Average dpm/100 cm² C-14	Survey Meter #	High cpm	Avg cpm	Average dpm/100 cm² I-125	Gross µRem/hr
61	Metal	Drawers	<100	<100	12	288	<MDCR	12		307	274	<MDCR	4	140	80	<MDCR	4
62	Metal	Drawers	<100	<100	12	331	<MDCR	12		352	305	<MDCR	4	140	80	<MDCR	
63	Metal	Drawers	<100	<100	12	344	<MDCR	12		445	390	<MDCR	4	140	80	<MDCR	
64	Metal	Drawers	<100	<100	12	392	<MDCR	12		428	381	<MDCR	4	140	80	<MDCR	
65	Metal	Drawers	<100	<100	12	420	<MDCR	12		471	421	<MDCR	4	140	80	<MDCR	3
66	Metal	Drawers	<100	<100	12	396	<MDCR	12		459	418	<MDCR	4	140	80	<MDCR	
67	Metal	Drawers	<100	<100	12	387	<MDCR	12		404	367	<MDCR	4	140	80	<MDCR	
68	Metal	Drawers	<100	<100	12	423	<MDCR	12		497	459	<MDCR	4	140	80	<MDCR	
69	Metal	Drawers	<100	<100	12	430	<MDCR	12		473	434	<MDCR	4	140	80	<MDCR	4
70	Metal	Drawers	<100	<100	12	384	<MDCR	12		443	382	<MDCR	4	140	80	<MDCR	
71	Metal	Drawers	<100	<100	15	439	<MDCR	15		513	425	<MDCR	4	140	80	<MDCR	
72	Metal	Drawers	<100	<100	15	412	<MDCR	15		512	429	<MDCR	4	140	80	<MDCR	
73	Metal	Drawers	<100	<100	15	445	<MDCR	15		502	449	<MDCR	4	140	80	<MDCR	
74	Metal	Drawers	<100	<100	15	499	<MDCR	15		524	468	<MDCR	4	140	80	<MDCR	4
75	Metal	Drawers	<100	<100	15	568	<MDCR	15		584	504	<MDCR	4	140	80	<MDCR	
76	Metal	Drawers	<100	<100	15	536	<MDCR	15		548	518	<MDCR	4	140	80	<MDCR	
77	Metal	Drawers	<100	<100	15	509	<MDCR	15		547	503	<MDCR	4	140	80	<MDCR	
78	Metal	Drawers	<100	<100	15	528	<MDCR	15		582	546	<MDCR	4	140	80	<MDCR	
79	Metal	Drawers	<100	<100	15	522	<MDCR	15		530	504	<MDCR	4	140	80	<MDCR	
80	Corian	Cabinet	<100	<100	15	553	<MDCR	15		587	550	<MDCR	4	140	80	<MDCR	3
81	Metal	Cabinet	<100	<100	15	540	<MDCR	15		581	549	<MDCR	4	140	80	<MDCR	
82	Metal	Cabinet	<100	<100	15	529	<MDCR	15		562	542	<MDCR	4	140	80	<MDCR	
83	Metal	Cabinet	<100	<100	12	434	<MDCR	12		526	452	<MDCR	4	140	80	<MDCR	
84	Corian	Cabinet	<100	<100	12	444	<MDCR	12		503	479	<MDCR	4	140	80	<MDCR	
85	Corian	Cabinet	<100	<100	12	445	<MDCR	12		487	435	<MDCR	4	140	80	<MDCR	
86	Corian	Cabinet	<100	<100	12	450	<MDCR	12		502	440	<MDCR	4	140	80	<MDCR	4
87	Metal	Cabinet	<100	<100	12	350	<MDCR	12		390	348	<MDCR	4	140	80	<MDCR	
88	Metal	Cabinet	<100	<100	12	327	<MDCR	12		411	332	<MDCR	4	140	80	<MDCR	
89	Metal	Door	<100	<100	12	305	<MDCR	12		357	318	<MDCR	4	140	80	<MDCR	
90	Metal	Door	<100	<100	12	438	<MDCR	12		476	435	<MDCR	4	140	80	<MDCR	

Survey Meter Information

Site: Incyte Genomics Building: 115 Lab/Room: 86 / 87

	Meter 1		Meter 2		Meter 3		Meter 4		Meter 5	
Date:	9/9/2003		9/9/2003		9/9/2003		9/9/2003		9/9/2003	
Make:	Ludlum		Ludlum		Ludlum		Ludlum		Bicron	
Model:	2221		2221		2221		2360		MicroRem	
SN:	108857		108857		108857		170576		B694G	
Probe Make:	Ludlum		Ludlum		Ludlum		Ludlum		NA	
Probe Model:	43-37		43-37		43-37		44-3		NA	
Probe SN:	074969		074969		074969		023384		NA	
Probe Area (cm^2):	425		425		425		5		NA	
Next Cal. Date:	1/24/2004		1/24/2004		1/24/2004		1/29/2004		1/25/2004	
Background Surface Material	Linoleum		Tile		Carpet		Air		Air	
Background(c)-Time(Min):	12451	10	10511	10	10774	10	919	10	3	
CS Isotope - Activity(μCi):	C-14		C-14		C-14		Sr-90		NA	NA
CS Source(cpm) - 2σ Check	23156	Yes	23156	Yes	23156	Yes	199851	Yes	NA	NA
L_c, L_d (Counts)	82	167	76	154	76	156	22	48	NA	NA
Direct MDC C-14, Scan MDC C-14 (dpm/100cm^2)	246	3374	226	2907	229	7426	4758	27489	NA	NA
MDCR (With Background; cpm/100cm^2):	1622		1398		1428		194		NA	
Efficiency, Isotope:	16.0%	C-14	16.0%	C-14	16.0%	C-14	20.0%	I-125	NA	NA

Please See MARSSIM Chapter 6 for a more detailed explanation of equations.

Lc= Critical Detection Level
Ld= a priori Detection limit
MDC= Minimum Detectable Concentration
MDCR= Minimum Detectable Count Rate

$$\text{Direct MDC} = \frac{3+4.65*SQRT(B)}{T*\varepsilon_t*A*C}$$

$$\text{Scan MDC} = \frac{MDCR}{SQRT(E_{hf})*\varepsilon_t*\varepsilon_s*A*C}$$

$$MDCR = 1.38*(SQRT(B/(T*60)))*60+(B/T)$$

B = Background Counts
T = Counting Time In Minutes
ε_t = Total Detector Efficiency in Counts/Disintegration
A = Physical Probe Area in cm^2
C = Other Constants and Factors When Needed
E_{hf} = Human Factor Efficiency
ε_s = Source Efficiency

Survey Meter Information

Site: Incyte Genomics Building: 115 Lab/Room: 86 / 87

	Meter 6		Meter 7		Meter 8		Meter 9		Meter 10	
Date:	9/9/2003		9/9/2003		9/9/2003		9/9/2003		9/10/2003	
Make:	Ludlum		Ludlum		Ludlum		Ludlum		Ludlum	
Model:	2221		2221		2221		2221		2221	
SN:	174947		174947		174947		174947		174947	
Probe Make:	Ludlum		Ludlum		Ludlum		Ludlum		Ludlum	
Probe Model:	43-68		43-68		43-68		43-68		43-68	
Probe SN:	118629		118629		118629		118629		118629	
Probe Area (cm^2):	100		100		100		100		100	
Next Cal. Date:	1/24/2004		1/24/2004		1/24/2004		1/24/2004		1/24/2004	
Background Surface Material	Air		Tile		Linoleum		Carpet		Air	
Background(c)-Time(Min):	3401	10	3503	10	4277	10	3828	10	2997	10
Isotope - Activity(μCi):	C-14		C-14		C-14		C-14		C-14	C-14
Source(cpm) - 2σ Check	37131	Yes	37131	Yes	37131	Yes	37131	Yes	37098	Yes
L_c, L_d (Counts)	43	89	44	90	48	99	46	94	40	84
Direct MDC C-14, Scan MDC C-14 (dpm/100cm^2)	444	3799	450	3892	496	4587	470	10464	418	3428
MDCR (With Background; cpm/100cm^2):	537		550		649		592		485	
Efficiency, Isotope:	20.0%	C-14	20.0%	C-14	20.0%	C-14	20.0%	C-14	20.0%	C-14

Please See MARSSIM Chapter 6 for a more detailed explanation of equations.

Lc= Critical Detection Level
Ld= a priori Detection limit
MDC= Minimum Detectable Concentration
MDCR= Minimum Detectable Count Rate

Direct MDC= $\frac{3+4.65*SQRT(B)}{T*\varepsilon_t*A*C}$

Scan MDC= $\frac{MDCR}{SQRT(E_{hf})*\varepsilon_t*\varepsilon_s*A*C}$

MDCR= 1.38*(SQRT(B/(T*60)))*60+(B/T)

B = Background Counts
T = Counting Time In Minutes
ε_t = Total Detector Efficiency in Counts/Disintegration
A = Physical Probe Area in cm^2
C = Other Constants and Factors When Needed
E_{hf} = Human Factor Efficiency
ε_s = Source Efficiency

Survey Meter Information

Site: Incyte Genomics Building: 115 Lab/Room: 86 / 87

	Meter 11		Meter 12		Meter 13		Meter 14		Meter 15	
Date:	9/10/2003		9/11/2003		9/11/2003		9/11/2003		9/11/2003	
Make:	Ludlum		Ludlum		Ludlum		Bicron		Ludlum	
Model:	2221		2221		2360		MicroRem		2221	
SN:	174947		174947		170576		B694G		174947	
Probe Make:	Ludlum		Ludlum		Ludlum		NA		Ludlum	
Probe Model:	43-68		43-68		44-3		NA		43-68	
Probe SN:	118629		118629		023384		NA		118629	
Probe Area (cm^2):	100		100		5		NA		100	
Next Cal. Date:	1/24/2004		1/24/2004		1/29/2004		1/25/2004		1/24/2004	
Background Surface Material	Linoleum		Air		Air		Air		Air	
Background(c)-Time(Min):	3409	10	3181	10	844	10	3	NA	5278	10
Isotope - Activity(μCi):	C-14		C-14		Sr-90		NA		C-14	C-14
Source(cpm) - 2σ Check	37098	Yes	36956	Yes	199882	Yes	NA	Yes	36956	Yes
L_c, L_d (Counts)	43	89	42	86	21	46	NA	NA	54	110
Direct MDC C-14, Scan MDC C 14 (dpm/100cm^2)	444	3806	430	3597	4572	25824	NA	NA	549	5469
MDCR (With Background; cpm/100cm^2):	538		509		183		NA		773	
Efficiency, Isotope:	20.0%	C-14	20.0%	C-14	20.0%	I-125	NA	NA	20.0%	C-14

Please See MARSSIM Chapter 6 for a more detailed explanation of equations.

Lc= Critical Detection Level
Ld= a priori Detection limit
MDC= Minimum Detectable Concentration
MDCR= Minimum Detectable Count Rate

Direct MDC= $\frac{3+4.65*SQRT(B)}{T*\varepsilon_t*A*C}$

Scan MDC= $\frac{MDCR}{SQRT(E_{hf})*\varepsilon_t*\varepsilon_s*A*C}$

MDCR= 1.38*(SQRT(B/(T*60)))*60+(B/T)

B = Background Counts
T = Counting Time In Minutes
ε_t = Total Detector Efficiency in Counts/Disintegration
A = Physical Probe Area in cm^2
C = Other Constants and Factors When Needed
E_{hf} = Human Factor Efficiency
ε_s = Source Efficiency

Radiological Decommissioning Survey	Incyte Genomics 1090 Elkton Rd	RSO, Inc.		
		Building 115	Room 86 / 87	Lab Type

Surveyors	Name: Walter Wiencek	Name Paul Madairy	Date 9/9/2003
Contact	Name: John Nicholson	Phone No. 1-302-275-2550	

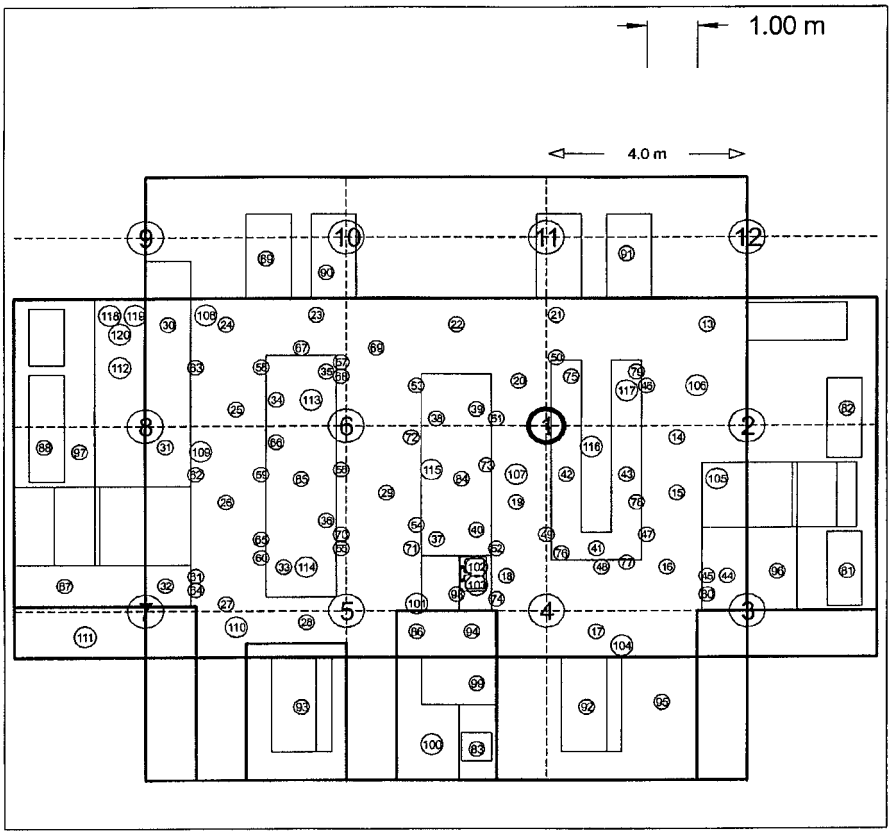

Isotopes And Wipe Results				
3-H	x		125-I	x
14-C	x		Other	
35-S			Other	
32-P			Other	
33-P	x		Other	

Total Wipes: 80

Wipe Results All <200 dpm/ 100 cm^2?

Yes	X	No	

If No

Wipe No.	Result in dpm / 100 cm^2

Please mark "x" when completed.

x	1. Data sheet is completed with all appropriate data.
x	2. The meter sheet contains all of the meters used for this survey with all of their efficiencies, MDC's, & MDCR's.
x	3. The above map is clear and accurate with all wipe locations marked with a circled number.
x	4. The wipe results are attached with all results less than release criteria. If no please explain in the remarks section.
x	5. All direct measurements are less than the MDCR or less than the release criteria (If above MDCR).
x	6. Exposure is measured using an appropriate meter and the result is less than the release criteria with the location clearly marked on the map.

Signature: Paul Madairy

Remarks:

Site: Incyte Genomics Building: 115 Lab/Room: 86 / 87

Start Date: 09/09/03 Finish Date: 09/11/03

Surveyor: Walter Wiencek Surveyor: Paul Madairy

Fume Hood Survey Results			*Wipe Test*		*β Direct*			*β Scan*					*γ Scan*				x-Rate
Wipe Number	Surface	Location	β dpm/100 cm²	I-125 dpm/100 cm²	Survey Meter #	Gross cpm/100 cm²	dpm/100 cm² C-14	Survey Meter #	Grid No.	High cpm/100 cm²	Average cpm/100 cm²	Average dpm/100 cm² C-14	Survey Meter #	High cpm	Avg cpm	Average dpm/100 cm² I-125	Gross µRem/hr
F2-FMS-1-17 L1																	
1	Corian	Inside Bottom	<100	<100	10	428	<MDCR	10		464	427	<MDCR	4	80	40	<MDCR	4
2	Corian	Inside Bottom	<100	<100	10	415	<MDCR	10		494	431	<MDCR	4	80	40	<MDCR	
3	Corian	Inside Left	<100	<100	10	286	<MDCR	10		322	298	<MDCR	4	80	40	<MDCR	
4	Corian	Inside Right	<100	<100	10	322	<MDCR	10		387	337	<MDCR	4	80	40	<MDCR	
5	Corian	Top / Vent L	<100	<100	10	405	<MDCR	10		414	398	<MDCR	4	80	40	<MDCR	
6	Corian	Top / Vent R	<100	<100	10	433	<MDCR	10		443	429	<MDCR	4	80	40	<MDCR	
7	Corian	Back	<100	<100	10	359	<MDCR	10		377	349	<MDCR	4	80	40	<MDCR	
8	Metal	Lip	<100	<100	10	434	<MDCR	10		441	423	<MDCR	4	80	40	<MDCR	
9	Glass	Sashe	<100	<100	10	330	<MDCR	10		470	351	<MDCR	4	80	40	<MDCR	
10	Metal	Top Outside	<100	<100	10	359	<MDCR	10		407	369	<MDCR	4	80	40	<MDCR	
11	Corian	Drain Swab	<100	<100	10	462	<MDCR										4

Radiological Decommissioning Survey	Incyte Genomics 1090 Elkton Rd	RSO, Inc. Building: 115 / Room: 86 / 87 / Lab Type:

Surveyors	Name: Walter Wiencek	Name: Paul Madairy	Date: 9/9/2003
Contact	Name: John Nicholson	Phone No. 1-302-275-2550	

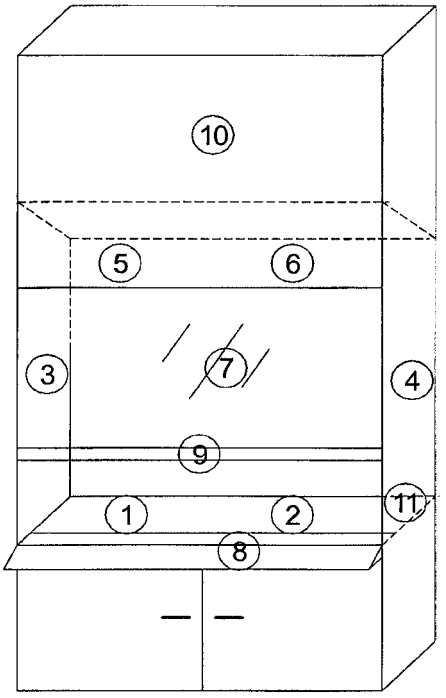

Total Wipes: 10

Wipe Results All <300 dpm/ 100 cm²?

Yes	X	No	

If No

Wipe No.	Result in dpm / 100 cm²

Please use an "x" for completed.

X	1. Data sheet is completed with all appropriate data.
X	2. The meter sheet contains all of the meters used for this survey with all of their efficiencies, MDC's, & MDCR's.
X	3. The above map is clear and accurate with all wipe locations marked with a circled number.
X	4. The wipe results are attached with all results less than release criteria. If no please explain in the remarks section.
X	5. All direct measurements are less than the MDCR or less than the release criteria (If above MDCR).
X	6. Exposure is measured using an appropriate meter and the result is less than the release criteria with the location clearly marked on the map.

Signature: Paul Madairy

Remarks:

Site: Incyte Building: 115 Lab/Room: Waste Storage

Start Date: 09/11/03 Finish Date: 09/12/03

Surveyor: Walter Wiencek Surveyor: Paul Madairy

Area Survey Results			*Wipe Test*		*β Direct*			*β Scan*					*γ Scan*				x-Rate
Wipe Number	Surface	Location	β dpm/100 cm^2	I-125 dpm/100 cm^2	Survey Meter #	Gross cpm/100 cm^2	dpm/100 cm^2 C-14	Survey Meter #	Grid No.	High cpm/100 cm^2	Average cpm/100 cm^2	Average dpm/100 cm^2 C-14	Survey Meter #	High cpm	Avg cpm	Average dpm/100 cm^2 I-125	Gross µRem/hr
1	Concrete	Floor	<100	<100	4	456	<MDCR	2		1611	1267	<MDCR	1	200	140	<MDCR	
2	Drywall	Wall	<100	<100	3	402	<MDCR	3		439	417	<MDCR	1	200	140	<MDCR	
3	Drywall	Wall	<100	<100	3	409	<MDCR	3		483	422	<MDCR	1	200	140	<MDCR	
4	Drywall	Wall	<100	<100	3	408	<MDCR	3		462	399	<MDCR	1	200	140	<MDCR	
5	Drywall	Wall	<100	<100	4	400	<MDCR	4		465	414	<MDCR	1	200	140	<MDCR	
6	Block	Wall	<100	<100	4	450	<MDCR	4		461	450	<MDCR	1	200	140	<MDCR	
7	Block	Wall	<100	<100	3	444	<MDCR	3		497	436	<MDCR	1	200	140	<MDCR	
8	Metal	Cage	<100	<100	3	364	<MDCR	3		457	385	<MDCR	1	200	140	<MDCR	
9	Metal	Cage	<100	<100	3	361	<MDCR	3		389	344	<MDCR	1	200	140	<MDCR	
10	Metal	Cage	<100	<100	3	410	<MDCR	3		440	403	<MDCR	1	200	140	<MDCR	
11	Metal	Cage	<100	<100	3	346	<MDCR	3		407	371	<MDCR	1	200	140	<MDCR	
12	Drywall	Wall	<100	<100	3	396	<MDCR	3		412	393	<MDCR	1	200	140	<MDCR	
13	Drywall	Wall	<100	<100	3	403	<MDCR	3		461	397	<MDCR	1	200	140	<MDCR	
14	Wood	Shelf	<100	<100	3	359	<MDCR	3		453	403	<MDCR	1	200	140	<MDCR	
15	Corian	Bench	<100	<100	3	420	<MDCR	3		448	404	<MDCR	1	200	140	<MDCR	
16	Plexiglass	Scale Box	<100	<100	3	441	<MDCR	3		481	433	<MDCR	1	200	140	<MDCR	
17	Plexiglass	Scale Box	<100	<100	3	388	<MDCR	3		406	365	<MDCR	1	200	140	<MDCR	
18	Concrete	Floor	<100	<100	4	467	<MDCR	2		1398	1221	<MDCR	1	200	140	<MDCR	
19	concrete	Floor	<100	<100	4	346	<MDCR	2		1576	1355	<MDCR	1	200	140	<MDCR	
20	Concrete	Floor	<100	<100	4	458	<MDCR	2		1402	1199	<MDCR	1	200	140	<MDCR	
21	Concrete	Floor	<100	<100	4	448	<MDCR	2		1537	1264	<MDCR	1	200	140	<MDCR	
22	Metal	Ceiling Vent	<100	<100	3	442	<MDCR	3		487	459	<MDCR	1	200	140	<MDCR	

Survey Meter Information

Site: Incyte Building: 115 Lab/Room: Waste Storage

	Meter 1		Meter 2		Meter 3		Meter 4		Meter 5	
Date:	9/11/2003		9/12/2003		9/12/2003		9/12/2003		9/11/2003	
Make:	Ludlum		Ludlum		Ludlum		Ludlum		Bicron	
Model:	2360		2221		2221		2221		MicroRem	
SN:	170576		108857		174947		174947		B694G	
Probe Make:	Ludlum		Ludlum		Ludlum		Ludlum		NA	
Probe Model:	44-3		43-37		43-68		43-68		NA	
Probe SN:	023384		023384		118629		118629		NA	
Probe Area (cm^2):	5		425		100		100		NA	
Next Cal. Date:	1/29/2004		1/24/2003	Not Cal	1/24/2003	Not Cal	1/24/2003	Not Cal	1/25/2004	
Background Surface Material	Air		Cocrete		Air		Concrete		Air	
Background(c)-Time(Min):	844	10	14148	10	3324	10	4223	10	3	
CS Isotope - Activity(μCi):	Sr-90		C-14		C-14		C-14		NA	NA
CS Source(cpm) - 2σ Check	199882	Yes	23072	Yes	37049	Yes	37049	Yes	NA	NA
L_c, L_d (Counts)	21	46	88	178	42	88	48	99	NA	NA
Direct MDC C-14, Scan MDC C-14 (dpm/100cm^2)	4354	24594	262	3779	439	3728	493	9079	NA	NA
MDCR (With Background; cpm/100cm^2):	183		1817		527		642		NA	
Efficiency, Isotope:	21.0%	I-125	16.0%	C-14	20.0%	C-14	20.0%	C-14	NA	NA

Please See MARSSIM Chapter 6 for a more detailed explanation of equations.

Lc= Critical Detection Level
Ld= a priori Detection limit
MDC= Minimum Detectable Concentration
MDCR= Minimum Detectable Count Rate

Direct MDC= $\frac{3+4.65*SQRT(B)}{T*\varepsilon_t*A*C}$

Scan MDC= $\frac{MDCR}{SQRT(E_{hf})*\varepsilon_t*\varepsilon_s*A*C}$

MDCR= 1.38*(SQRT(B/(T*60)))*60+(B/T)

B = Background Counts
T = Counting Time In Minutes
ε_t = Total Detector Efficiency in Counts/Disintegration
A = Physical Probe Area in cm^2
C = Other Constants and Factors When Needed
E_{hf} = Human Factor Efficiency
ε_s = Source Efficiency

Radiological Decommissioning Survey	Incyte 1090 Elkton Rd	RSO, Inc. Building: 115 / Room: Waste Storage / Lab Type:

Surveyors	Name: Walter Wiencek	Name: Paul Madairy	Date: 9/11/2003
Contact	Name: John Nicholson	Phone No.: 1-302-275-2550	

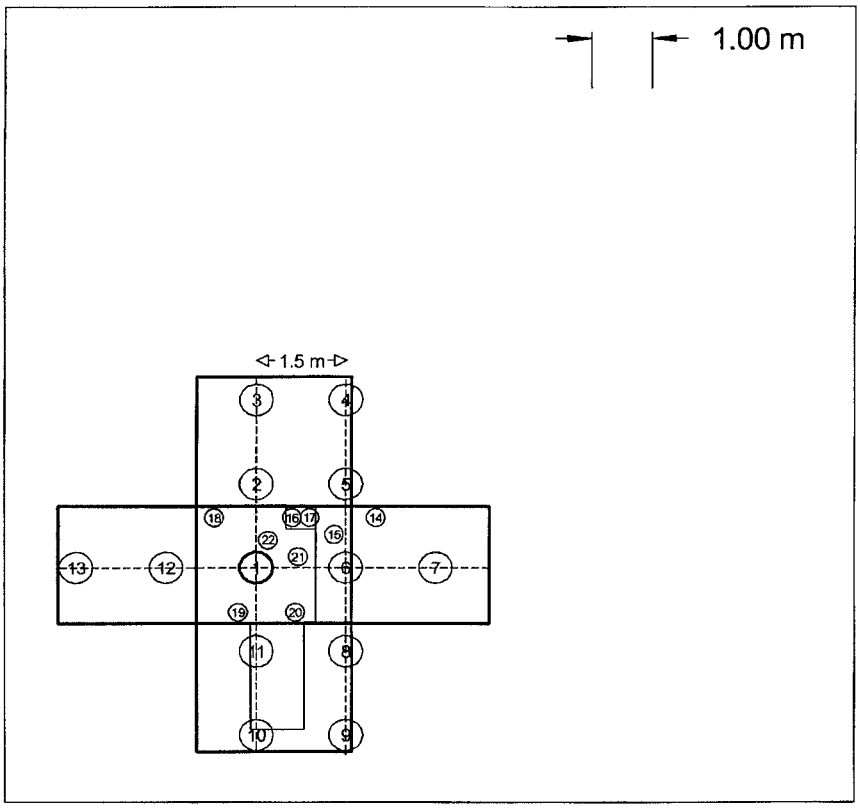

Isotopes And Wipe Results				
3-H	x		125-I	x
14-C	x		Other	
35-S			Other	
32-P			Other	
33-P	x		Other	

Total Wipes: 22

Wipe Results All <200 dpm/ 100 cm^2?

Yes	X	No	

If No

Wipe No.	Result in dpm / 100 cm^2

Please mark "x" when completed.

x	1. Data sheet is completed with all appropriate data.
x	2. The meter sheet contains all of the meters used for this survey with all of their efficiencies, MDC's, & MDCR's.
x	3. The above map is clear and accurate with all wipe locations marked with a circled number.
x	4. The wipe results are attached with all results less than release criteria. If no please explain in the remarks section.
x	5. All direct measurements are less than the MDCR or less than the release criteria (If above MDCR).
x	6. Exposure is measured using an appropriate meter and the result is less than the release criteria with the location clearly marked on the map.

Signature: Paul Madairy

Remarks:

Site: Incyte Building: 115 Lab/Room: Penthouse

Start Date: 09/16/03 Finish Date: 09/16/03

Surveyor: Walter Wiencek Surveyor: Paul Madairy

Area Survey Results			*Wipe Test*		*β Direct*			*β Scan*					*γ Scan*				x-Rate
Wipe Number	Surface	Location	β dpm/100 cm²	I-125 dpm/100 cm²	Survey Meter #	Gross cpm/100 cm²	dpm/100 cm² C-14	Survey Meter #	Grid No.	High cpm/100 cm²	Average cpm/100 cm²	Average dpm/100 cm² C-14	Survey Meter #	High cpm	Avg cpm	Average dpm/100 cm² I-125	Gross µRem/hr
1	Concrete	Floor	<100	<100	2	552	<MDCR	3		1643	1401	<MDCR	4	100	60	<MDCR	5
2	Concrete	Floor	<100	<100	2	685	<MDCR	3		1661	1445	<MDCR	4	100	60	<MDCR	
3	Concrete	Floor	<100	<100	2	605	<MDCR	3		1786	1491	<MDCR	4	100	60	<MDCR	
4	Concrete	Floor	<100	<100	2	486	<MDCR	3		1777	1451	<MDCR	4	100	60	<MDCR	
5	Concrete	Floor	<100	<100	2	536	<MDCR	3		1747	1503	<MDCR	4	100	60	<MDCR	
6	Concrete	Floor	<100	<100	2	607	<MDCR	3		1753	1521	<MDCR	4	100	60	<MDCR	
7	Concrete	Floor	<100	<100	2	529	<MDCR	3		1676	1503	<MDCR	4	100	60	<MDCR	
8	Concrete	Floor	<100	<100	2	494	<MDCR	3		1548	1375	<MDCR	4	100	60	<MDCR	
9	Concrete	Floor	<100	<100	2	490	<MDCR	3		1717	1333	<MDCR	4	100	60	<MDCR	
10	Concrete	Floor	<100	<100	2	558	<MDCR	3		1554	1421	<MDCR	4	100	60	<MDCR	
11	Concrete	Floor	<100	<100	2	549	<MDCR	3		1762	1439	<MDCR	4	100	60	<MDCR	5
12	Concrete	Floor	<100	<100	2	504	<MDCR	3		1796	1486	<MDCR	4	100	60	<MDCR	
13	Metal	Main Air Unit	<100	<100	1	392	<MDCR	1		403	378	<MDCR	4	100	60	<MDCR	
14	Metal	Main Air Unit	<100	<100	1	447	<MDCR	1		485	432	<MDCR	4	100	60	<MDCR	5
15	Metal	Main Air Unit	<100	<100	1	326	<MDCR	1		366	338	<MDCR	4	100	60	<MDCR	
16	Metal	Main Air Unit	<100	<100	1	363	<MDCR	1		392	362	<MDCR	4	100	60	<MDCR	
17	Metal	Main Air Unit	<100	<100	1	372	<MDCR	1		401	367	<MDCR	4	100	60	<MDCR	
18	Metal	Main Air Unit	<100	<100	1	402	<MDCR	1		457	400	<MDCR	4	100	60	<MDCR	
19	Metal	Main Air Unit	<100	<100	1	228	<MDCR	1		267	223	<MDCR	4	100	60	<MDCR	
20	Metal	Main Air Unit	<100	<100	1	265	<MDCR	1		332	282	<MDCR	4	100	60	<MDCR	
21	Metal	Main Air Unit	<100	<100	1	412	<MDCR	1		435	405	<MDCR	4	100	60	<MDCR	
22	Metal	Main Air Unit	<100	<100	1	350	<MDCR	1		404	379	<MDCR	4	100	60	<MDCR	5
23	Metal	Main Air Unit	<100	<100	1	416	<MDCR	1		466	422	<MDCR	4	100	60	<MDCR	
24	Metal	Main Air Unit	<100	<100	1	427	<MDCR	1		455	430	<MDCR	4	100	60	<MDCR	
25	Metal	Main Air Unit	<100	<100	1	422	<MDCR	1		493	413	<MDCR	4	100	60	<MDCR	
26	Metal	Main Air Unit	<100	<100	1	351	<MDCR	1		382	348	<MDCR	4	100	60	<MDCR	
27	Metal	Main Air Unit	<100	<100	1	414	<MDCR	1		460	379	<MDCR	4	100	60	<MDCR	
28	Metal	Main Air Unit	<100	<100	1	436	<MDCR	1		481	442	<MDCR	4	100	60	<MDCR	4
29	Metal	Hood Vent Lab 85	<100	<100	1	420	<MDCR						4	100	60	<MDCR	
30	Metal	Hood Vent Lab 85	<100	<100	1	413	<MDCR	1		486	422	<MDCR	4	100	60	<MDCR	4

Site: Incyte Building: 115 Lab/Room: Penthouse

Start Date: 09/16/03 Finish Date: 09/16/03

Surveyor: Walter Wiencek Surveyor: Paul Madairy

Area Survey Results			*Wipe Test*		*β Direct*			*β Scan*					*γ Scan*				x-Rate
Wipe Number	Surface	Location	β dpm/100 cm²	I-125 dpm/100 cm²	Survey Meter #	Gross cpm/100 cm²	dpm/100 cm² C-14	Survey Meter #	Grid No.	High cpm/100 cm²	Average cpm/100 cm²	Average dpm/100 cm² C-14	Survey Meter #	High cpm	Avg cpm	Average dpm/100 cm² I-125	Gross µRem/hr
31	Metal	Hood Vent Lab 85	<100	<100	1	414	<MDCR						4	100	60	<MDCR	
32	Metal	Hood Vent Lab 85	<100	<100	1	399	<MDCR	1		440	398	<MDCR	4	100	60	<MDCR	
33	Metal	Hood Vent Lab 87	<100	<100	1	431	<MDCR						4	100	60	<MDCR	4
34	Metal	Hood Vent Lab 87	<100	<100	1	400	<MDCR	1		403	383	<MDCR	4	100	60	<MDCR	
35	Metal	Hood Vent Lab 86	<100	<100	1	363	<MDCR						4	100	60	<MDCR	
36	Metal	Hood Vent Lab 86	<100	<100	1	341	<MDCR	1		402	335	<MDCR	4	100	60	<MDCR	
37	Metal	Hood Vent Lab 83	<100	<100	1	380	<MDCR						4	100	60	<MDCR	
38	Metal	Hood Vent Lab 83	<100	<100	1	388	<MDCR	1		411	377	<MDCR	4	100	60	<MDCR	4
39	Metal	Hood Vent Lab 84	<100	<100	1	466	<MDCR						4	100	60	<MDCR	
40	Metal	Hood Vent Lab 84	<100	<100	1	461	<MDCR	1		483	455	<MDCR	4	100	60	<MDCR	
41	Metal	Hood Vent Lab 84	<100	<100	1	424	<MDCR						4	100	60	<MDCR	
42	Metal	Hood Vent Lab 84	<100	<100	1	413	<MDCR	1		427	385	<MDCR	4	100	60	<MDCR	4
43	Metal	Hood Vent Lab 84	<100	<100	1	398	<MDCR						4	100	60	<MDCR	
44	Metal	Hood Vent Lab 84	<100	<100	1	379	<MDCR	1		432	390	<MDCR	4	100	60	<MDCR	
45	Metal	Hood Vent Lab 84	<100	<100	1	443	<MDCR						4	100	60	<MDCR	
46	Metal	Hood Vent Lab 84	<100	<100	1	448	<MDCR	1		490	442	<MDCR	4	100	60	<MDCR	
47	Concrete	Floor	<100	<100	1	447	<MDCR	2		1721	1504	1201	4	100	60	<MDCR	
48	Drain	Swab Inside	<100	<100	1	461	<MDCR						4	100	60	<MDCR	5
49	Drain	Swab Inside	<100	<100	1	527	<MDCR	2		1738	1462	1201	4	100	60	<MDCR	
50	Drain	Swab Inside	<100	<100	1	454	<MDCR						4	100	60	<MDCR	5
51	Drain	Swab Inside	<100	<100	1	504	<MDCR	2		1746	1393	1201	4	100	60	<MDCR	
52	Drain	Swab Inside	<100	<100	1	454	<MDCR						4	100	60	<MDCR	5
53	Drain	Swab Inside	<100	<100	1	446	<MDCR	2		1578	1422	1201	4	100	60	<MDCR	
54	Drain	Swab Inside	<100	<100	1	445	<MDCR						4	100	60	<MDCR	5

Survey Meter Information

Site: Incyte Building: 115 Lab/Room: Penthouse

	Meter 1		Meter 2		Meter 3		Meter 4		Meter 5	
Date:	9/16/2003		9/16/2003		9/16/2003		9/16/2003		9/16/2003	
Make:	Ludlum		Ludlum		Ludlum		Ludlum		Bicron	
Model:	2221		2221		2221		2360		MicroRem	
SN:	174947		174947		108857		170576		B694G	
Probe Make:	Ludlum		Ludlum		Ludlum		Ludlum		NA	
Probe Model:	43-68		43-68		43-37		44-3		NA	
Probe SN:	118629		118629		074969		023384		NA	
Probe Area (cm^2):	100		100		425		5		NA	
Next Cal. Date:	1/24/2003	Not Cal	1/24/2003	Not Cal	1/24/2003	Not Cal	1/29/2004		1/25/2004	
Background Surface Material	Air		Concrete		Air		Air		Air	
Background(c)-Time(Min):	3336	10	5046	10	13358	10	617	10	5	NA
CS Isotope - Activity(μCi):	C-14		C-14		C-14		Sr-90		NA	NA
CS Source(cpm) - 2σ Check	37039	Yes	37039	Yes	23254	Yes	199731	Yes	NA	NA
L_c, L_d (Counts)	43	88	52	107	85	173	18	40	NA	NA
Direct MDC C-14, Scan MDC C-14 (dpm/100cm^2)	440	3739	537	10532	254	3591	3764	19619	NA	NA
MDCR (With Background; cpm/100cm^2):	529		745		1726		146		NA	
Efficiency, Isotope:	20.0%	C-14	20.0%	C-14	16.0%	C-14	21.0%	I-125	NA	NA

Please See MARSSIM Chapter 6 for a more detailed explanation of equations.

Lc= Critical Detection Level
Ld= a priori Detection limit
MDC= Minimum Detectable Concentration
MDCR= Minimum Detectable Count Rate

Direct MDC= $\frac{3+4.65*SQRT(B)}{T*\varepsilon_t*A*C}$

Scan MDC= $\frac{MDCR}{SQRT(E_{hf})*\varepsilon_t*\varepsilon_s*A*C}$

MDCR= 1.38*(SQRT(B/(T*60)))*60+(B/T)

B = Background Counts
T = Counting Time In Minutes
ε_t = Total Detector Efficiency in Counts/Disintegration
A = Physical Probe Area in cm^2
C = Other Constants and Factors When Needed
E_{hf} = Human Factor Efficiency
ε_s = Source Efficiency

Radiological Decommissioning Survey	Incyte 1090 Elkton Rd	RSO, Inc.		
		Building 115	Room Penthouse	Lab Type

Surveyors	Name: Walter Wiencek	Name Paul Madairy	Date 9/16/2003
Contact	Name: John Nicholson	Phone No. 1-302-275-2550	

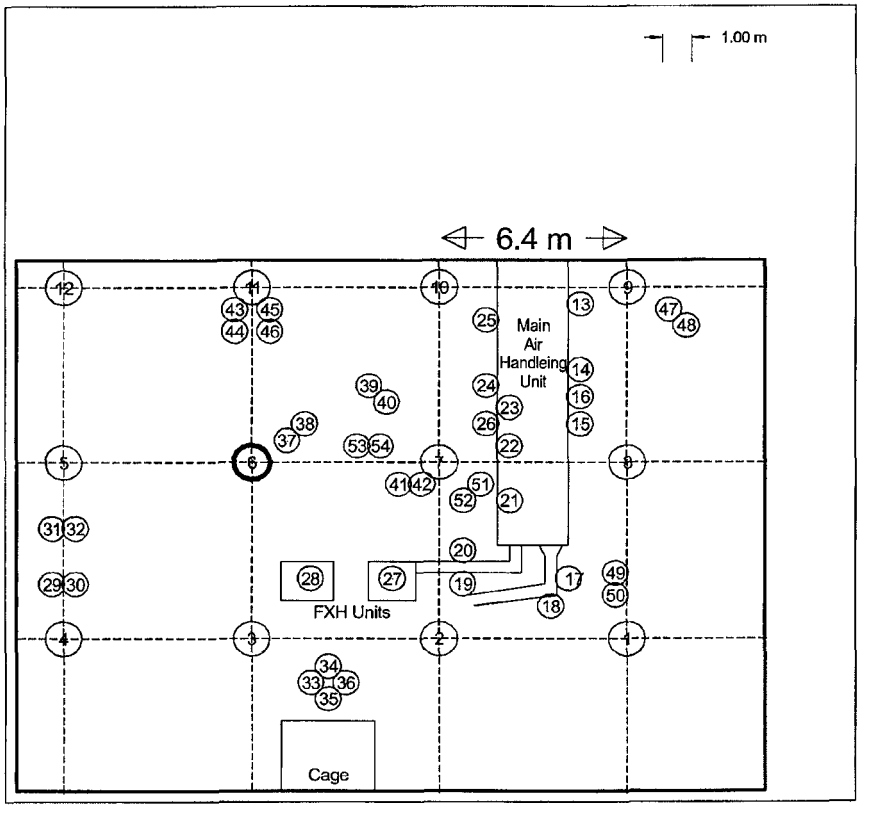

Isotopes And Wipe Results				
3-H	X		125-I	x
14-C	X		Other	
35-S	X		Other	
32-P	X		Other	
33-P	X		Other	

Total Wipes: 54

Wipe Results All <200 dpm/ 100 cm^2?

Yes	X	No	

If No

Wipe No.	Result in dpm / 100 cm^2

Please mark "x" when completed.

x	1. Data sheet is completed with all appropriate data.
x	2. The meter sheet contains all of the meters used for this survey with all of their efficiencies, MDC's, & MDCR's.
x	3. The above map is clear and accurate with all wipe locations marked with a circled number.
x	4. The wipe results are attached with all results less than release criteria. If no please explain in the remarks section.
x	5. All direct measurements are less than the MDCR or less than the release criteria (If above MDCR).
x	6. Exposure is measured using an appropriate meter and the result is less than the release criteria with the location clearly marked on the map.

Signature: Paul Madairy

Remarks:

Site: Incyte Building: 115 Lab/Room: Penthouse Roof

Start Date: 09/16/03 Finish Date: 09/17/03

Surveyor: Walter Wiencek Surveyor: Paul Madairy

Area Survey Results			*Wipe Test*		*β Direct*			*β Scan*					*γ Scan*				x-Rate
Wipe Number	Surface	Location	β dpm/100 cm^2	I-125 dpm/100 cm^2	Survey Meter #	Gross cpm/100 cm^2	dpm/100 cm^2 C-14	Survey Meter #	Grid No.	High cpm/100 cm^2	Average cpm/100 cm^2	Average dpm/100 cm^2 C-14	Survey Meter #	High cpm	Avg cpm	Average dpm/100 cm^2 I-125	Gross µRem/hr
1	Rock	Roof	<100	<100	2	518	<MDCR	2		540	484	<MDCR	1	140	80	<MDCR	4
2	Cement	Roof	<100	<100	4	397	<MDCR	4		433	405	<MDCR	1	140	80	<MDCR	
3	Cement	Roof	<100	<100	4	350	<MDCR	4		416	381	<MDCR	1	140	80	<MDCR	
4	Rock	Roof	<100	<100	2	496	<MDCR	2		500	471	<MDCR	1	140	80	<MDCR	5
5	Cement	Roof	<100	<100	4	407	<MDCR	4		433	398	<MDCR	1	140	80	<MDCR	
6	Cement	Roof	<100	<100	4	430	<MDCR	4		458	418	<MDCR	1	140	80	<MDCR	
7	Rock	Roof	<100	<100	2	490	<MDCR	2		550	502	<MDCR	1	140	80	<MDCR	
8	Cement	Roof	<100	<100	4	399	<MDCR	4		440	413	<MDCR	1	140	80	<MDCR	5
9	Cement	Roof	<100	<100	4	414	<MDCR	4		459	401	<MDCR	1	140	80	<MDCR	
10	Rock	Roof	<100	<100	6	626	<MDCR	6		645	608	<MDCR	1	140	80	<MDCR	
11	Rubber	Roof	<100	<100	2	407	<MDCR	2		452	431	<MDCR	1	140	80	<MDCR	
12	Rock	Roof	<100	<100	2	793	<MDCR	2		846	785	<MDCR	1	140	80	<MDCR	4
13	Metal	Blower Stack	<100	<100	3	390	<MDCR	3		417	397	<MDCR	1	140	80	<MDCR	
14	Metal	Blower Stack	<100	<100	3	374	<MDCR	3		405	362	<MDCR	1	140	80	<MDCR	
15	Metal	Blower Stack	<100	<100	3	407	<MDCR	3		423	405	<MDCR	1	140	80	<MDCR	
16	Metal	Blower Stack	<100	<100	3	403	<MDCR	3		432	412	<MDCR	1	140	80	<MDCR	5
17	Metal	Blower Stack	<100	<100	3	424	<MDCR	3		454	408	<MDCR	1	140	80	<MDCR	
18	Metal	Blower Stack	<100	<100	3	409	<MDCR	3		431	411	<MDCR	1	140	80	<MDCR	
19	Metal	Vent	<100	<100	3	336	<MDCR	3		361	321	<MDCR	1	140	80	<MDCR	
20	Metal	Vent	<100	<100	3	426	<MDCR	3		444	424	<MDCR	1	140	80	<MDCR	5
21	Metal	Vent	<100	<100	3	415	<MDCR	3		450	410	<MDCR	1	140	80	<MDCR	
22	Metal	Vent	<100	<100	3	410	<MDCR	3		441	413	<MDCR	1	140	80	<MDCR	
23	Rubber	Drains	<100	<100	6	438	<MDCR	6		477	429	<MDCR	1	140	80	<MDCR	4
24	Rubber	Drains	<100	<100	6	464	<MDCR	6		502	448	<MDCR	1	140	80	<MDCR	5
25	Metal	Drains	<100	<100	3	407	<MDCR	3		449	402	<MDCR	1	140	80	<MDCR	5
26	Metal	Drains	<100	<100	3	468	<MDCR	3		492	418	<MDCR	1	140	80	<MDCR	5
27	Plastic	Vents	<100	<100	6	384	<MDCR	6		417	386	<MDCR	1	140	80	<MDCR	
28	Plastic	Vents	<100	<100	6	411	<MDCR	6		461	417	<MDCR	1	140	80	<MDCR	
29	Plastic	Vents	<100	<100	6	400	<MDCR	6		458	409	<MDCR	1	140	80	<MDCR	5
30	Plastic	Drains	<100	<100	6	380	<MDCR	6		414	387	<MDCR	1	140	80	<MDCR	5

Site: Incyte Building: 115 Lab/Room: Penthouse Roof

Start Date: 09/16/03 Finish Date: 09/17/03

Surveyor: Walter Wiencek Surveyor: Paul Madairy

Area Survey Results			*Wipe Test*		*β Direct*			*β Scan*					*γ Scan*				x-Rate
Wipe Number	Surface	Location	β dpm/100 cm^2	I-125 dpm/100 cm^2	Survey Meter #	Gross cpm/100 cm^2	dpm/100 cm^2 C-14	Survey Meter #	Grid No.	High cpm/100 cm^2	Average cpm/100 cm^2	Average dpm/100 cm^2 C-14	Survey Meter #	High cpm	Avg cpm	Average dpm/100 cm^2 I-125	Gross µRem/hr
31	Plastic	Drains	<100	<100	6	418	<MDCR	6		476	423	<MDCR	1	140	80	<MDCR	4
32	Plastic	Vents	<100	<100	6	438	<MDCR	6		477	445	<MDCR	1	140	80	<MDCR	5
33	Plastic	Drains	<100	<100	6	466	<MDCR	6		506	432	<MDCR	1	140	80	<MDCR	
34	Plastic	Drains	<100	<100	6	407	<MDCR	6		422	394	<MDCR	1	140	80	<MDCR	4
35	Plastic	Drains	<100	<100	6	404	<MDCR	6		444	397	<MDCR	1	140	80	<MDCR	4
36	Plastic	Drains	<100	<100	6	358	<MDCR	6		411	373	<MDCR	1	140	80	<MDCR	5
37	Plastic	Drains	<100	<100	6	371	<MDCR	6.		408	384	<MDCR	1	140	80	<MDCR	5
38	Plastic	Drains	<100	<100	6	454	<MDCR	6		483	417	<MDCR	1	140	80	<MDCR	4
39	Plastic	Vents	<100	<100	6	473	<MDCR	6		482	420	<MDCR	1	140	80	<MDCR	
40	Metal	Vents	<100	<100	3	493	<MDCR	3		536	501	<MDCR	1	140	80	<MDCR	
41	Plastic	Vents	<100	<100	6	488	<MDCR	6		552	503	<MDCR	1	140	80	<MDCR	5
42	Plastic	Vents	<100	<100	6	509	<MDCR	6		555	506	<MDCR	1	140	80	<MDCR	
43	Plastic	Vents	<100	<100	6	562	<MDCR	6		591	552	<MDCR	1	140	80	<MDCR	
44	Plastic	Vents	<100	<100	6	461	<MDCR	6		557	467	<MDCR	1	140	80	<MDCR	
45	Plastic	Vents	<100	<100	6	445	<MDCR	6		496	446	<MDCR	1	140	80	<MDCR	
46	Plastic	Vents	<100	<100	6	402	<MDCR	6		452	403	<MDCR	1	140	80	<MDCR	5
47	Plastic	Vents	<100	<100	6	384	<MDCR	6		409	393	<MDCR	1	140	80	<MDCR	
48	Plastic	Vents	<100	<100	6	482	<MDCR	6		507	444	<MDCR	1	140	80	<MDCR	
49	Plastic	Drains	<100	<100	6	406	<MDCR	6		489	453	<MDCR	1	140	80	<MDCR	6
50	Plastic	Drains	<100	<100	6	385	<MDCR	6		407	381	<MDCR	1	140	80	<MDCR	5
51	Plastic	Drains	<100	<100	6	422	<MDCR	6		506	445	<MDCR	1	140	80	<MDCR	5
52	Plastic	Drains	<100	<100	6	446	<MDCR	6		517	454	<MDCR	1	140	80	<MDCR	4
53	Plastic	Drains	<100	<100	6	418	<MDCR	6		431	385	<MDCR	1	140	80	<MDCR	5
54	Metal	Stack	<100	<100	3	359	<MDCR	3		403	391	<MDCR	1	140	80	<MDCR	4
55	Metal	Stack	<100	<100	3	357	<MDCR	3		399	366	<MDCR	1	140	80	<MDCR	

Survey Meter Information

Site: Incyte Building: 115 Lab/Room: Penthouse Roof

	Meter 1		Meter 2		Meter 3		Meter 4		Meter 5	
Date:	9/16/2003		9/17/2003		9/17/2003		9/17/2003		9/16/2003	
Make:	Ludlum		Ludlum		Ludlum		Ludlum		Bicron	
Model:	2360		2221		2221		2221		MicroRem	
SN:	170576		174947		174947		174947		B694G	
Probe Make:	Ludlum		Ludlum		Ludlum		Ludlum		NA	
Probe Model:	44-3		43-68		43-68		43-68		NA	
Probe SN:	023384		118629		118629		118629		NA	
Probe Area (cm^2):	5		100		100		100		NA	
Next Cal. Date:	1/29/2004		1/24/2004		1/24/2004		1/24/2004		1/25/2004	
Background Surface Material	Air		Rock		Air		Cement		Air	
Background(c)-Time(Min):	617	10	5760	10	3240	10	3730	10	5	NA
CS Isotope - Activity(µCi):	Sr-90		C-14		C-14		C-14		NA	NA
CS Source(cpm) - 2σ Check	199731	Yes	37286	Yes	37286	Yes	37286	Yes	NA	NA
L_c, L_d (Counts)	18	40	56	115	42	87	45	93	NA	NA
Direct MDC C-14, Scan MDC C-14 (dpm/100cm^2)	3764	19619	573	5887	434	3652	464	4097	NA	NA
MDCR (With Background; cpm/100cm^2):	146		833		516		579		NA	
Efficiency, Isotope:	21.0%	I-125	20.0%	C-14	20.0%	C-14	20.0%	C-14	NA	NA

Please See MARSSIM Chapter 6 for a more detailed explanation of equations.

Lc= Critical Detection Level
Ld= a priori Detection limit
MDC= Minimum Detectable Concentration
MDCR= Minimum Detectable Count Rate

Direct MDC= $\frac{3+4.65*SQRT(B)}{T*\varepsilon_t*A*C}$

Scan MDC= $\frac{MDCR}{SQRT(E_{hf})*\varepsilon_t*\varepsilon_s*A*C}$

MDCR= 1.38*(SQRT(B/(T*60)))*60+(B/T)

B = Background Counts
T = Counting Time In Minutes
ε_t = Total Detector Efficiency in Counts/Disintegration
A = Physical Probe Area in cm^2
C = Other Constants and Factors When Needed
E_{hf} = Human Factor Efficiency
ε_s = Source Efficiency

Survey Meter Information

Site: Incyte Building: 115 Lab/Room: Penthouse Roof

	Meter 6		Meter 7	Meter 8	Meter 9	Meter 10
Date:	9/17/2003					
Make:	Ludlum					
Model:	2221					
SN:	174947					
Probe Make:	Ludlum					
Probe Model:	43-68					
Probe SN:	118629					
Probe Area (cm^2):	100					
Next Cal. Date:	1/24/2004					
Background Surface Material	Rubber / Plastic					
Background(c)-Time(Min):	4130	10				
Isotope - Activity(μCi):	C-14					
Source(cpm) - 2σ Check	37286	Yes				
L_c, L_d (Counts)	47	97				
Direct MDC C-14, Scan MDC C-14 (dpm/100cm^2)	487	4456				
MDCR (With Background; cpm/100cm^2):	630					
Efficiency, Isotope:	20.0%	C-14				

Please See MARSSIM Chapter 6 for a more detailed explanation of equations.

Lc= Critical Detection Level
Ld= a priori Detection limit
MDC= Minimum Detectable Concentration
MDCR= Minimum Detectable Count Rate

Direct MDC= $\frac{3+4.65*SQRT(B)}{T*\varepsilon_t*A*C}$

Scan MDC= $\frac{MDCR}{SQRT(E_{hf})*\varepsilon_t*\varepsilon_s*A*C}$

MDCR= 1.38*(SQRT(B/(T*60)))*60+(B/T)

B = Background Counts
T = Counting Time In Minutes
ε_t = Total Detector Efficiency in Counts/Disintegration
A = Physical Probe Area in cm^2
C = Other Constants and Factors When Needed
E_{hf} = Human Factor Efficiency
ε_s = Source Efficiency

Radiological Decommissioning Survey	Incyte 1090 Elkton Rd	RSO, Inc.		
		Building 115	Room Penthouse Roof	Lab Type

Surveyors	Name: Walter Wiencek	Name Paul Madairy	Date 9/16/2003
Contact	Name: John Nicholson	Phone No. 1-302-275-2550	

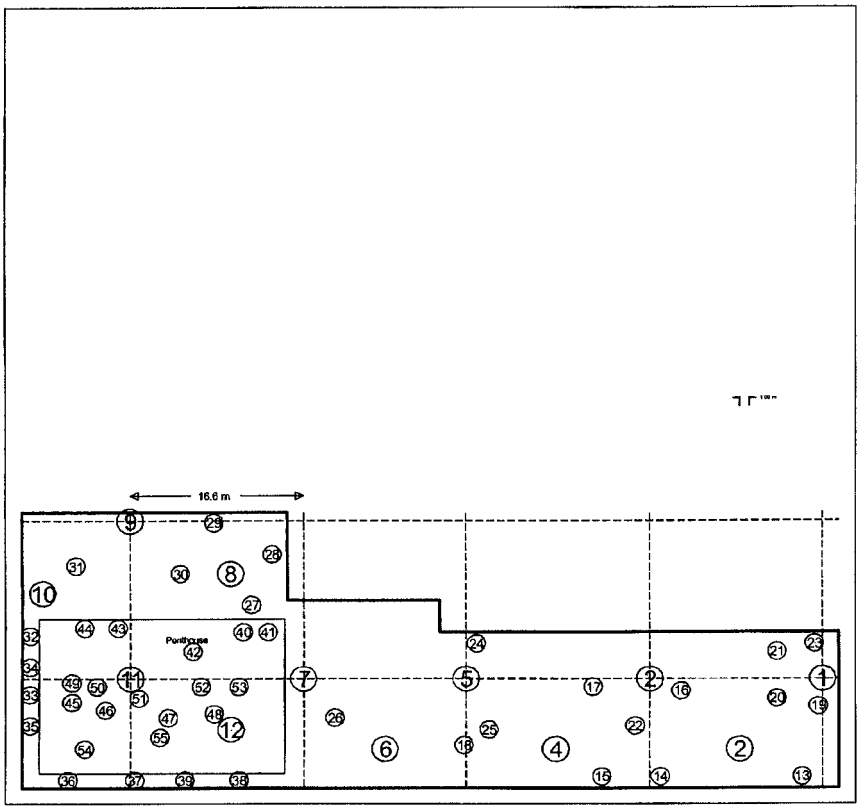

Isotopes And Wipe Results				
3-H	x		125-I	x
14-C	x		Other	
35-S	x		Other	
32-P	x		Other	
33-P	x		Other	

Total Wipes: 55

Wipe Results All <200 dpm/ 100 cm^2?

Yes	X	No	

If No

Wipe No.	Result in dpm / 100 cm^2

Please mark "x" when completed.

x	1. Data sheet is completed with all appropriate data.
x	2. The meter sheet contains all of the meters used for this survey with all of their efficiencies, MDC's, & MDCR's.
x	3. The above map is clear and accurate with all wipe locations marked with a circled number.
x	4. The wipe results are attached with all results less than release criteria. If no please explain in the remarks section.
x	5. All direct measurements are less than the MDCR or less than the release criteria (If above MDCR).
x	6. Exposure is measured using an appropriate meter and the result is less than the release criteria with the location clearly marked on the map.

Signature: Paul Madairy

Remarks:

Site: Incyte Genomics Building: 120 Lab/Room: Receiving

Start Date: 09/10/03 Finish Date: 09/10/03

Surveyor: Walter Wiencek Surveyor: Paul Madairy

Area Survey Results			*Wipe Test*		*β Direct*			*β Scan*					*γ Scan*				x-Rate
Wipe Number	Surface	Location	β dpm/100 cm²	I-125 dpm/100 cm²	Survey Meter #	Gross cpm/100 cm²	dpm/100 cm² C-14	Survey Meter #	Grid No.	High cpm/100 cm²	Average cpm/100 cm²	Average dpm/100 cm² C-14	Survey Meter #	High cpm	Avg cpm	Average dpm/100 cm² I-125	Gross µRem/hr
1	Concrete	Floor	<100	<100	2	402	<MDCR	3		1499	1361	<MDCR	4	100	60	<MDCR	3
2	Concrete	Floor	<100	<100	2	430	<MDCR	3		1551	1431	<MDCR	4	100	60	<MDCR	
3	Concrete	Floor	<100	<100	2	472	<MDCR	3		1521	1331	<MDCR	4	100	60	<MDCR	
4	Concrete	Floor	<100	<100	2	406	<MDCR	3		1553	1443	<MDCR	4	100	60	<MDCR	
5	Concrete	Floor	<100	<100	2	465	<MDCR	3		1560	1468	<MDCR	4	100	60	<MDCR	
6	Concrete	Floor	<100	<100	2	413	<MDCR	3		1773	1445	<MDCR	4	100	60	<MDCR	3
7	Plexiglass	Sheild	<100	<100	1	273	<MDCR	1		307	282	<MDCR	4	100	60	<MDCR	
8	Metal	Table	<100	<100	1	299	<MDCR	1		312	287	<MDCR	4	100	60	<MDCR	
9	Metal	Rollers	<100	<100	1	300	<MDCR	1		330	267	<MDCR	4	100	60	<MDCR	
10	Metal	Refrigerator	<100	<100	1	311	<MDCR	1		323	303	<MDCR	4	100	60	<MDCR	
11	Metal	Refrigerator	<100	<100	1	303	<MDCR	1		319	297	<MDCR	4	100	60	<MDCR	
12	Concrete	Floor	<100	<100	2	510	<MDCR	3		1503	1431	<MDCR	4	100	60	<MDCR	5
Freezer																	
1	Metal	Top	<100	<100	1	339	<MDCR	1		424	344	<MDCR	4	100	60	<MDCR	
2	Metal	Left Side	<100	<100	1	273	<MDCR	1		292	278	<MDCR	4	100	60	<MDCR	
3	Metal	Front	<100	<100	1	276	<MDCR	1		301	273	<MDCR	4	100	60	<MDCR	
4	Metal	Right Side	<100	<100	1	303	<MDCR	1		318	284	<MDCR	4	100	60	<MDCR	
5	Metal	Bottom	<100	<100	1	310	<MDCR	1		322	297	<MDCR	4	100	60	<MDCR	
6	Metal	Back	<100	<100	1	278	<MDCR	1		310	283	<MDCR	4	100	60	<MDCR	
7	Metal	Top Inside	<100	<100	1	281	<MDCR	1		311	279	<MDCR	4	100	60	<MDCR	
8	Metal	Inside Right	<100	<100	1	245	<MDCR	1		297	263	<MDCR	4	100	60	<MDCR	
9	Metal	Inside Top	<100	<100	1	280	<MDCR	1		305	289	<MDCR	4	100	60	<MDCR	
10	Metal	Inside Bottom	<100	<100	1	300	<MDCR	1		321	294	<MDCR	4	100	60	<MDCR	
11	Metal	Inside Back	<100	<100	1	304	<MDCR	1		321	297	<MDCR	4	100	60	<MDCR	
12	Metal	Inside Door	<100	<100	1	304	<MDCR	1		343	303	<MDCR	4	100	60	<MDCR	
13	Metal	Inside Racks	<100	<100	1	297	<MDCR	1		322	298	<MDCR	4	100	60	<MDCR	

Survey Meter Information

Site: Incyte Genomics Building: 120 Lab/Room: Receiving

	Meter 1		Meter 2		Meter 3		Meter 4		Meter 5	
Date:	9/10/2003		9/10/2003		9/10/2003		9/10/2003		9/10/2003	
Make:	Ludlum		Ludlum		Ludlum		Ludlum		Bicron	
Model:	2221		2221		2221		2360		MicroRem	
SN:	174947		174947		108857		170576		B694G	
Probe Make:	Ludlum		Ludlum		Ludlum		Ludlum		NA	
Probe Model:	43-68		43-68		43-37		44-3		NA	
Probe SN:	118629		118629		074969		023384		NA	
Probe Area (cm^2):	100		100		425		5		NA	
Next Cal. Date:	1/24/2004		1/24/2004		1/24/2004		1/29/2004		1/25/2004	
Background Surface Material	Air		Concrete		Concrete		Air		Air	
Background(c)-Time(Min):	2778	10	4475	10	14082	10	789	10	3	
CS Isotope - Activity(μCi):	C-14		C-14		C-14		Sr-90		NA	NA
CS Source(cpm) - 2σ Check	37098	Yes	37098	Yes	23046	Yes	199108	Yes	NA	NA
L_c, L_d (Counts)	39	81	49	101	87	177	21	44	NA	NA
Direct MDC C-14, Scan MDC C-14 (dpm/100cm^2)	403	3224	507	9527	261	7526	4430	24586	NA	NA
MDCR (With Background; cpm/100cm^2):	456		674		1809		174		NA	
Efficiency, Isotope:	20.0%	C-14	20.0%	C-14	16.0%	C-14	20.0%	I-125	NA	NA

Please See MARSSIM Chapter 6 for a more detailed explanation of equations.

Lc= Critical Detection Level
Ld= a priori Detection limit
MDC= Minimum Detectable Concentration
MDCR= Minimum Detectable Count Rate

Direct MDC= $\frac{3+4.65*SQRT(B)}{T*\varepsilon_t*A*C}$

Scan MDC= $\frac{MDCR}{SQRT(E_{hf})*\varepsilon_t*\varepsilon_s*A*C}$

MDCR= 1.38*(SQRT(B/(T*60)))*60+(B/T)

B = Background Counts
T = Counting Time In Minutes
ε_t = Total Detector Efficiency in Counts/Disintegration
A = Physical Probe Area in cm^2
C = Other Constants and Factors When Needed
E_{hf} = Human Factor Efficiency
ε_s = Source Efficiency

Radiological Decommissioning Survey	Incyte Genomics 1090 Elkton Rd	RSO, Inc.		
		Building 120	Room Receiving	Lab Type

Surveyors	Name: Walter Wiencek	Name Paul Madairy	Date 9/10/2003
Contact	Name: John Nicholson	Phone No. 1-302-275-2550	

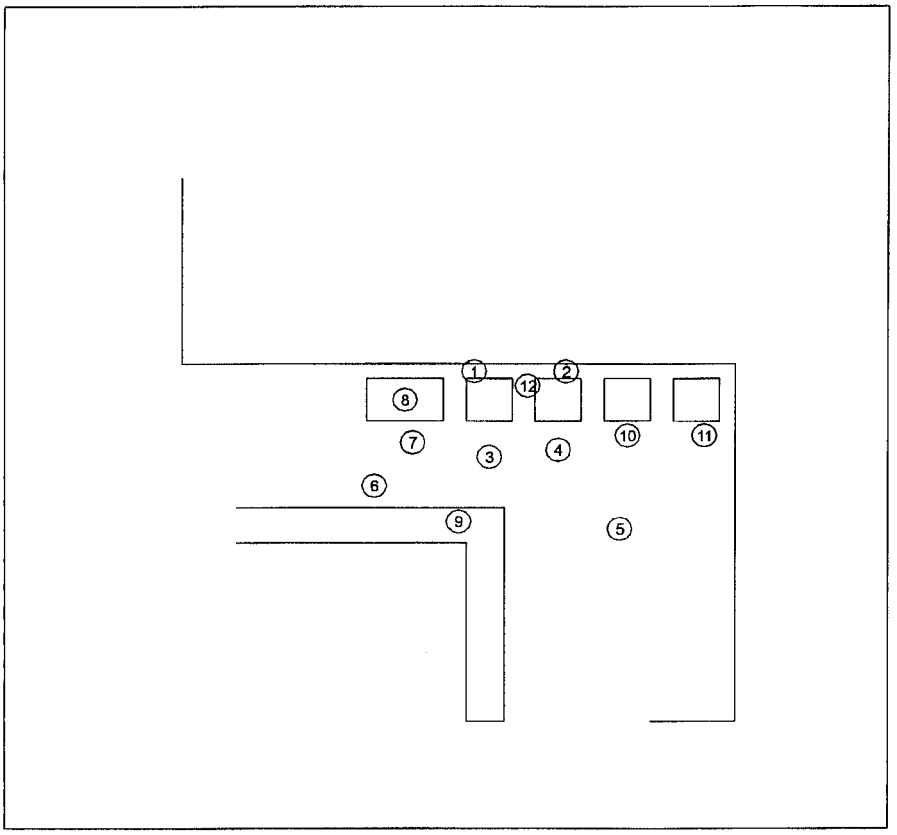

Isotopes And Wipe Results				
3-H	x		125-I	x
14-C	x		Other	
35-S			Other	
32-P	x		Other	
33-P	x		Other	

Total Wipes: 12

Wipe Results All <200 dpm/ 100 cm^2?

Yes	X	No	

If No

Wipe No.	Result in dpm / 100 cm^2

Please mark "x" when completed.

x	1. Data sheet is completed with all appropriate data.
x	2. The meter sheet contains all of the meters used for this survey with all of their efficiencies, MDC's, & MDCR's.
x	3. The above map is clear and accurate with all wipe locations marked with a circled number.
x	4. The wipe results are attached with all results less than release criteria. If no please explain in the remarks section.
x	5. All direct measurements are less than the MDCR or less than the release criteria (If above MDCR).
x	6. Exposure is measured using an appropriate meter and the result is less than the release criteria with the location clearly marked on the map.

Signature: Paul Madairy

Remarks:

This is to acknowledge the receipt of your letter/application dated

5/29/2007, and to inform you that the initial processing which includes an administrative review has been performed.

AMENDS 07-30728-01

☑ There were no administrative omissions. Your application was assigned to a technical reviewer. Please note that the technical review may identify additional omissions or require additional information.

☐ Please provide to this office within 30 days of your receipt of this card

_____.

A copy of your action has been forwarded to our License Fee & Accounts Receivable Branch, who will contact you separately if there is a fee issue involved.

Your action has been assigned **Mail Control Number** 140592.
When calling to inquire about this action, please refer to this control number.
You may call us on (610) 337-5398, or 337-5260.

NRC FORM 532 (RI)
(6-96)

Sincerely,
Licensing Assistance Team Leader