Nine Mile Point Unit 2
Alternative Source Term

Calculation H21C-103

"U2 CRDA, AST Methodology"

Engineering Services	CALCULATION COVER SHEET	Page 1 (Next 1a) Total 92 Last Attachment 2

Project: NINE MILE POINT NUCLEAR STATION Unit (1,2 or 0=Both): 2 Discipline: CR

Title	Calculation No.			
U2 CRDA, AST Methodology	H21C-103			
	(Sub)system(s) N/A	Building N/A	Floor Elev. N/A	Index No. N/A

Originator(s) M. Berg (Design Input Compilation, Case 1 and Appendix C)/ J. Metcalf (Case 2 and Appendices A, B and D), H. Pustulka (Appendix E).

Reviewer(s)/Approver(s) M. Berg (Case 2 and Appendices A, B and D) J. Metcalf (Design Input Compilation, Case 1 and Appendices C)

NMP Acceptance: GLENN R. STINSON 5/29/07

Rev	Description	Eval., CR, or Change No.	Prepared By	Date	Reviewed by	Date	App	Date
00	Initial Release	N/A	See attached Sig. Sheet	5/29/07	See attached Sig. Sheet	5/29/07	See attached Sig. Sheet	5/29/07

Computer Output/Microfilm separately filed? (Yes/No/N/A) No

Safety Class: (*SR/NSR/Qxx): SR

* If SR, attach or reference the associated Design Verification Report.

Superseded Document(s): N/A

Document Cross Reference(s) - For additional references see page(s) 7 & 8 Output provided? N (Y/N) If yes, group(s)

Ref No.	Document No.	Type	Index	Sheet	Rev	Ref No.	Document No.	Type	Index	Sheet	Rev
	SEE PAGES 7 & 8										

General References: SEE PAGES 7 & 8

Remarks: –

Confirmation Required (Yes/No): NO See Page(s):	Final Issue Status APP	Turnover Req'd (Yes/N/A): YES

10 CFR50.59 Evaluation Number(s):

Copy of Applicability Determination ~~or 50.59 Screen~~ Attached? Yes☒ No*☐

N/A ☐ *If "No", location of AD/Screen?

Component ID(s)(As shown in MEL): N/A

Key Words: Control Rod Drop Accident, CRDA, Design Basis, Dose, Accident

Engineering Services	Signature Sheet	Page 1a Next (2)

Title	Calculation No.
U2 CRDA, AST Methodology	H21C-103 Revision 0

Section		Prepared By	Date	Reviewed By	Date	Approved By	Date
Main Body	Design Input Compilation	[signature]	5-29-07	[signature]	5/29/07	Heather Postulka	5/29/07
	Case 1: Isolation of MSIVs	[signature]	5-29-07	[signature]	5/29/07	Heather Postulka	5/29/07
	Case 2: Main Condenser not isolated, mechanical vacuum pump in operation	[signature]	5/29/07	[signature]	5-29-07	Heather Postulka	5/29/07
Appendix A: Spreadsheet for the Calculation of Offsite and Control Room Doses		[signature]	5/29/07	[signature]	5-29-07	Heather Postulka	5/29/07
Appendix B: Calculation of Reference Activity Release for the Main Steam Line Radiation Monitor Gamma Dose Calculation		[signature]	5/29/07	[signature]	5-29-07	Heather Postulka	5/29/07
Appendix C Steam Line Radiation Monitor Response		[signature]	5-29-07	[signature]	5/29/07	Heather Postulka	5/29/07
Appendix D: RADTRAD Dose Analysis for Case 2		[signature]	5/29/07	Appendix E		Heather Postulka	5/29/07
Appendix E: STARDOSE Check for CRDA Dose Analysis		Heather Postulka	5/29/07	Check of Appendix D		Heather Postulka	5/29/07

Project: Nine Mile Point Nuclear Station Unit: __2__ Disposition: ____

Originator/Date Design Input Compilation and	Reviewer/Date	Calculation No.	Revision
Case 1: M. Berg 5/29/2007 Case 2: J. Metcalf 5/29/2007	Case 1: J. Metcalf 5/29/2007 Case 2: M. Berg 5/29/2007	H21C-103	0

Ref.

List of Effective Pages

Page No.	Latest Rev.	Page No.	Latest Rev.	Page No.	Latest Rev.	Page No.	Latest Rev.	Page No.	Latest Rev.	Page No.	Latest Rev.
1	0	A1-A5	0								
1a	0	B1-B2	0								
2	0	C1-C13	0								
3	0	D1-D40	0								
4	0	E1-E11	0								
5	0	Attach 1	0								
6	0	Attach 2	0								
7	0										
8	0										
9	0										
10	0										
11	0										
12	0										
13	0										
14	0										
15	0										
16	0										
17	0										
18	0										

Total Number of Calculation Pages ____92____

91 [illegible] 5/29/07

Ref.

Table of Contents

CALCULATION COVER SHEET 1
List of Effective Pages 2
Table of Contents 3
Purpose 4
Summary of Results 5
Methodology 5
Assumptions 7
References 7
Design Input 8
Calculation 11
Case 1 11
Case 2- 16
Conclusions 18

Appendix A: Spreadsheet for the Calculation of Offsite and Control Room Doses (5 Pages)

Appendix B: Calculation of the Reference Activity Release for the Main Steam Line Radiation Monitor Gamma Dose Calculation (2 Pages)

Appendix C: Steam Line Radiation Monitor Response (13 Pages)

Appendix D: RADTRAD Dose Analysis for Case 2 (40 Pages)
- Appendix D-1: Primary Input (.psf) file, Plant Scenerio File, nmp2crda-2pmp'''.psf
- Appendix D-2: Secondary Input (.nif, .rft, .inp) files
  - Appendix D-2.1: Appendix D-2.1: Nuclide Information File, nmp2.nif
  - Appendix D-2.2: Appendix D-2.2: Release Fraction File, nmp2-crda.rft
  - Appendix D-2.3: Appendix D-2.3: Dose Conversion Factor File, nmp2.inp
- Appendix D-3: Appendix D-3: Radtrad Output (.o0) file, nmp2crda.2pmp'''.out (Excerpt)

Appendix E: Check Calculation using STARDOSE for CRDA Dose Analysis, Case 2 (11 Pages)
- Appendix E-1: STARDOSE Library File (LIBFILE1.txt)
- Appendix E-2: STARDOSE Main Input File for CRDA Case 2
- Appendix E-3: STARDOSE Results for CRDA Case 2 (Excerpts)

Attachment 1: Design Verification Report (1 Page)

Attachment 2: Design Verification Checklist (1 Page)

Ref.

Purpose

This calculation is prepared by Polestar Applied Technology, Inc. at the request of Nine Mile Point Nuclear Station, a subsidiary of Constellation Energy Group (NMP) to determine the offsite and control room doses following a Control Rod Drop Accident (CRDA). The analysis includes releases through two separate pathways (or cases) and evaluates the radiological impact at the Exclusion Area Boundary (EAB), Low Population Zone (LPZ) and control room (CR). The cases are as follows:

- Case 1: Leakage from the main condenser based on the assumption of manual isolation of the Main Steam Isolation Valves (MSIVs)
- Case 2: Main Condenser not isolated, mechanical vacuum pump in operation.

This analysis includes the impact of a Unit 1 CRDA on the Unit 2 control room, as well as a Unit 2 CRDA on the Unit 1 and the Unit 2 control rooms.

Ref.

Summary of Results

Table 1: CRDA TEDE Doses by Location

	Case 1 (rem)	Case 2 (rem)	Regulatory Limit* (rem)
EAB	5.68E-01	1.03	6.3
LPZ	7.73E-02	1.17	6.3
U1 CRDA on U2 CR	7.88E-01	<1.61	5.0
U2 CRDA on U1 CR	1.57E-01	<2.31	5.0
U2 CRDA on U2 CR	1.26E+00	2.31	5.0

*Reference 1

1. The most limiting person at the EAB would not be subjected to radiation exposure resulting in doses in excess of 6.3 rem TEDE over 2 hours,

2. The most limiting person at the inner boundary of the LPZ would not be subjected to radiation exposure resulting in doses in excess of 6.3 rem TEDE over 30 days, and finally,

3. The hypothetical maximum exposed control room operator would not be subjected to radiation exposure resulting in doses in excess of 5 rem over 30 days.

Note that for the EAB dose, the worst two hours is from t = 0.3 hours to t = 2.3 hours. This is the time of peak activity in the main condenser.

This table shows that all cases meet the applicable limits at all locations.

Methodology

This calculation determines the offsite and control room doses due to a CRDA. Due to the simplicity of Case 1, the spreadsheet methodology outlined in Appendix A was used. Case 2 required the use of the computer code RADTRAD 3.03 [Ref 2] to determine the activity releases, offsite doses, and control room dose. Verification of the RADTRAD runs was performed using the STARDOSE 1.01 computer code [Ref 3] and is documented in Appendix E.

The NRC requires an analysis of the CRDA in which it is assumed that the released activity from the damaged fuel is instantaneously transported to the main condenser, and the associated activity concentration will certainly exceed the main steam line radiation monitor safety limit. For this analysis (Case 1), it is assumed that the steam lines provide a DF of 10 for iodine and a DF of 100 for other solids, as does the main condenser. It is also assumed that the release from the main condenser (one percent per day) stops at 24 hours after the start of the accident.

Ref.

The main steam line radiation monitors need to be sufficiently sensitive to trip the mechanical vacuum pump in the event of gross fuel failures. Of particular interest is the response to a CRDA. Given a CRDA, in the instance where the transport of activity is much slower than in Case 1 (i.e., as in Case 2), the main steam line radiation monitors may not have their safety limit exceeded. Under these conditions, the main condenser may not isolate (i.e., the mechanical vacuum pump could be operating and continue operating). This case is analyzed in the following way:

1. Establish a "base" steam line activity concentration (Ci/m^3) with the radionuclide mix corresponding to the CRDA analysis from Case 1.

2. Calculate the dose rate at the steam line radiation monitor for the base steam line activity concentration.

3. Using the known threshold dose rate corresponding to the safety limit for the main steam line radiation monitor, ratio that dose rate to the dose rate calculated from the known concentration to determine the concentration that would produce the safety limit dose rate.

4. Create a source volume of a size that would contain all of the CRDA activity at the threshold concentration for detection.

5. Define the maximum volumetric steam flow with the mechanical vacuum pump in operation.

6. Perform a dose analysis using RADTRAD [Ref 2] with a check using STARDOSE [Ref 3] using a model like that of Case 1 except with a time-dependent flow into the main condenser based on the maximum volumetric steam flow with the mechanical vacuum pump in operation, the mechanical vacuum pump flow out of the main condenser, and stack X/Qs (corresponding to the mechanical vacuum pump exhaust flowpath). Assume the same DFs and end of release from the main condenser (24 hours) as Case 1.

7. Compare the TEDE values obtained in Step 6 with the 6.3 rem BWR CRDA TEDE limit for offsite doses and the 5 rem TEDE limit for the control room [Ref 1].

8. Knowing the X/Qs from the Unit 2 release points to the Unit 1 CR and vice versa, demonstrate that doses to the cross-unit CR would be acceptable for Case 2 by comparing the cross-unit X/Qs to the X/Qs used in obtaining the acceptable Case 2 doses for the same-unit CR (that dose may be found in Reference 4 for Unit 1).

As with the calculation of the Unit 1 doses in Reference 4, the dose analysis for both cases for Unit 2 was conducted in full compliance with NRC Regulatory Guide 1.183 [Ref 1] using DCFs consistent with References 5 and 6. All Unit 2 input data may be found in Reference 7. For the Case 1 analysis of the Unit 1 releases to the Unit 2 CR, the input data (except for the X/Qs) may be found in Reference 8.

Ref.

Assumptions

Assumption 1: The Case 1 release is from the main condenser via the Main Steam Tunnel and at ground level. Case 2 releases are from the plant stack.
Justification: The exact leak location for the assumed 1% per day condenser leakage is not known, but it is conservatively assumed to be at ground level. The mechanical vacuum pump releases well be via the Main Stack (offgas release path). Such an assumption is consistent with the modeling of Unit 1 in Reference 4.

Assumption 2: For Case 2, attenuation of the environmental release by the offgas system is not credited. However, the stack release is credited.
Justification: Credit for the offgas system is permitted in Reference 1; it is conservative to ignore this credit. The credit is being taken only to the extent that the stack is assumed to be the release point. Such an assumption is consistent with the modeling of Unit 1 in Reference 4.

Assumption 3: Assume an infinite control room exchange rate with the environment for Case 2.
Justification: Using 1E6 cfm of control room supply air as unfiltered makeup ensures that control room operator dose is based on the same assumption of infinite exchange with the environment as Case 1. Such an assumption is consistent with the modeling of Unit 1 in Reference 4.

References

1. "Alternative Radiological Source Terms for Evaluating Design Basis Accidents at Nuclear Power Reactors", US NRC Regulatory Guide 1.183, Revision 0, July 2000.

2. S. L. Humphries et al, "RADTRAD: A Simplified Model for Radionuclide Transport and Removal and Dose Estimation", NUREG/CR-6604, Sandia National Laboratories, December 1997.

3. For calculation verification purposes only: "STARDOSE Model Report, Polestar Applied Technology, Inc., PSAT C109.03 January 1997.

4. H21C096, "U1 CRDA, AST Methodology", Revision 0

5. Federal Guidance Report No. 11, "Limiting Values of Radionuclide Intake and Air Concentration and Dose Conversion Factors for Inhalation, Submersion, and Ingestion," EPA 520/1-88-020, U.S. Environmental Protection Agency, Washington, DC, 1988.

6. Federal Guidance Report No. 12, "External Exposure to Radionuclides in Air, Water, and Soil," EPA-402-R-93-081, U.S. Environmental Protection Agency, Washington, DC, 1993.

Ref.

7. PSAT 3101CF.QA.03, "Design Database for Application of the Revised DBA Source Term to Nine Mile Point Unit 2", Revision 0

8. PSAT 4026CF.QA.03, "Design Database for Application of the Revised DBA Source Term to Nine Mile Point Unit 1", Revision 1

Design Input

Design Input Data (Unit 1 input item numbers from Reference 8 given in brackets; Unit 2 input item numbers from Reference 7 given in double brackets):

Unit 1 Power level = 1887 MWt [1.1]

Unit 2 Power Level = 4067 MWt [[1.1]]

Unit 1 and Unit 2 Core inventories [1.2] and [[1.2]]

Nuclide	Ci/MWt	Nuclide	Ci/MWt	Nuclide	Ci/MWt
Kr83m	3.27E+03	Ru106	1.76E+04	Cs134	7.29E+03
Kr85	3.93E+02	Rh105	2.84E+04	Cs136	2.28E+03
Kr85m	6.82E+03	Sb127	3.01E+03	Cs137	4.35E+03
Kr87	1.30E+04	Sb129	8.91E+03	Ba137m	4.12E+03
Kr88	1.83E+04	Te127	3.00E+03	Ba139	4.89+04
Kr89	2.22E+04	Te127m	4.05E+02	Ba140	4.71+04
Rb86	7.29E+01	Te129	8.76E+03	La140	5.12+04
Sr89	2.45E+04	Te129m	1.30E+03	La141	4.45+04
Sr90	3.14E+03	Te131m	3.97E+03	La142	4.29+04
Sr91	3.10E+04	Te132	3.85E+04	Ce141	4.47+04
Sr92	3.38E+04	I131	2.71E+04	Ce143	4.11+04
Y90	3.24E+03	I132	3.92E+04	Ce144	3.70+04
Y91	3.18E+04	I133	5.51E+04	Pr143	3.97+04
Y92	3.40E+04	I134	6.03E+04	Nd147	1.80+04
Y93	3.96E+04	I135	5.16E+04	Np239	5.78E+05
Zr95	4.46E+04	Xe131m	3.04E+02	Pu238	1.45E+02
Zr97	4.51 E+04	Xe133	5.27E+04	Pu239	1.34E+01
Nb95	4.48 E+04	Xe133m	1.63E+03	Pu240	1.89E+01
Mo99	5.13 E+04	Xe135	1.91E+04	Pu241	5.49E+03
Tc99m	4.49 E+04	Xe135m	1.09E+04	Am241	7.48E+00
Ru103	4.29 E+04	Xe137	4.80E+04	Cm242	1.85E+03
Ru105	3.01 E+04	Xe138	4.50E+04	Cm244	1.23E+02

Ref.

Unit 1 Peaking factor = 1.8 [1.6]

Unit 2 Peaking factor = 1.8 [[1.6]]

Unit 1 Total number of fuel assemblies in core = 532 [2.5]

Unit 2 Total number of fuel assemblies in core = 764 [[2.1]]

Unit 1 Fuel failure: 850 pins (conservatively based on 8x8 fuel) for a failure fraction of 0.0258 [2.12]

Unit 2 Fuel failure: 770 pins (conservatively based on 8x8 fuel) for a failure fraction of 0.0163 [[2.9]]

Unit 1 melt fraction of the failed rods = 0 (no pins are assumed to melt) [2.13]

Unit 2 melt fraction of the failed rods = 0.0077 [[2.10]]

Unit 1 and Unit 2 Release fractions for all radionuclide groups [2.14] and [[2.11]]

Radio-nuclide Group	Release Fraction from Gap to Coolant	Release Fraction from Melted Fuel to Coolant	Fraction of Release That Reaches the Condenser	Fraction of Condenser Activity Available for Release to Environment
Noble Gas	10%	100%	100%	100%
Iodine	10%	50%	10%	10%
Br	5%	30%	1%	1%
Cs, Rb	12%	25%	1%	1%
Te Group	0%	5%	1%	1%
Ba, Sr	0%	2%	1%	1%
Noble Mtls	0%	0.25%	1%	1%
Ce Group	0%	0.05%	1%	1%
La Group	0%	0.02%	1%	1%

Iodine is partitioned such that 3% of the total released to the environment is organic iodine, and the balance is elemental iodine. [Ref 1]

Unit 1 and Unit 2 Leakage rate from main condenser to environs, Case 1 = 1% per day [3.16] and [[3.4]]

Unit 1 Control Room volume = 1.35E+05 cuft [3.9]

Unit 2 Control Room volume = 2.02E+05 cuft (53% of 3.81E+05 ft^3) [[3.2, 3.3]]

Ref.

X/Q values in sec/m3:

Building Releases	Worst 2 hour*	0-8 hr	8-24 hr	1-4 day	4-30 day
EAB ground [5.1] and [[5.1]]	1.9E-04 U1 1.19E-04 U2	N/A	N/A	N/A	N/A
EAB stack[5.1] and [[5.1]]	5.98E-05 U1 2.96E-05 U2	N/A	N/A	N/A	N/A
LPZ ground[5.2] and [[5.2]]	1.63E-05 U1 1.62E-05 U2	1.63E-05 U1 1.62E-05 U2	1.10E-05 U1 1.09E-05 U2	4.67E-06 U1 4.59E-06 U2	1.37E-06 U1 1.33E-06 U2
LPZ stack[5.2] and [[5.2]]	2.12E-05 U1 1.42E-05 U2	1.26E-06 U1 1.42E-05 U2	8.40E-07 U1 5.41E-07 U2	3.45E-07 U1 2.31E-07 U2	1.11E-07 U1 7.65E-08 U2
U1 accident to U2 Control Room ground (RB) [[5.5]]	1.26E-04	7.73E-05	2.74E-05	2.45E-05	2.23E-05
U2 accident to U1 Control Room ground (RB) [[5.3]]	1.77E-04	1.09E-04	3.92E-05	2.48E-05	1.85E-05
U2 accident to U2 Control Room ground (RB) [[5.5]]	1.09E-03	7.23E-04	2.50E-04	1.92E-04	1.47E-04
U1 accident to U2 Control Room ground (TB) [[5.]]	1.31E-04	9.42E-05	3.59E-05	3.01E-05	2.63E-05
U2 accident to U1 Control Room ground (TB) [[5.3]]	1.90E-04	1.37E-04	4.93E-05	3.12E-05	2.56E-05
U2 accident to U2 Control Room ground (TB) [[5.5]]	1.47E-03	9.74E-04	3.63E-04	2.45E-04	1.90E-04
U1 accident to U2 Control Room stack [[5.5]]	1.10E-04	6.16E-05	2.31E-05	1.85E-05	1.57E-05
U2 accident to U1 Control Room stack [[5.3]]	4.18E-05	2.30E-05	8.94E-06	5.62E-06	4.31E-06
U2 accident to U2 Control Room stack [[5.5]]	8.03E-05	4.48E-05	1.68E-05	1.20E-05	8.83E-06

*For the LPZ, value is based on the worst 4 hours

Control Room breathing rates in m3/s [5.4] and [[5.6]]

0-30 days 3.5E-4

EAB & LPZ breathing rates in m3/s [5.4] and [[5.6]]

0-8 hr 3.5E-4
1-4 days 1.8E-4
4-30 days 2.3E-4

Control Room occupancy factors [5.5] and [[5.7]]

0 – 24 hours 1.0
1-4 days 0.6
4-30 days 0.4

Ref.

Unit 2 Main Condenser Mechanical Vacuum Pump volumetric flowrate: 5000 cfm [[3.5]]

Unit 2 Main Condenser volume: 97,000 ft^3 [[3.7]]

Main Steam Line Radiation Monitor Set Point: 1800mR [[7.3]]
(basis to trip Mechanical Vacuum Pump)

Calculation

Case 1

Released activity from the damaged fuel is instantaneously transported to the main condenser and the associated activity concentration is assumed to exceed the main steam line radiation monitor safety limit and the main condenser isolates. Release to the environment is due to condenser leakage.

100% of the noble gases released from the damaged fuel rods into the reactor vessel, 10% of the iodines, and 1% of cesiums/rubidiums are assumed to reach the reactor building and condenser.

The flow from the condenser to the environment consists of 1% leakage/day for 24 hours. The condenser release is assumed to be direct to the environment. 100% of the noble gases released to the condenser, 10% of the iodines, and 1% of cesiums/rubidiums are assumed to reach the environment.

Case 1 is analyzed using a spreadsheet methodology as discussed in Appendix A. The spreadsheet inputs are described below.

Scaling Factors (Rows 4, 5 & 6):
Scaling Factor 1 is the Power Level in MW(t), used to convert the core inventory concentration to total activity. Scaling Factor 2 is the peaking factor. Scaling Factor 3 is the failure fraction multiplied by the 1% per day release.

DF (Row 7)
DF for Elemental I and Alkali metals is determined taking the inverse of the product of the fraction of release that reaches the condenser and the fraction of condenser activity available for release to the environment. For Elemental I : 1/(10%*10%)=100. DF for Alkali Metals 1/(1%*1%)=10000.

Source in Ci/MW(t) (column 2):
Items are taken from the core inventories presented in Item 1.2 of Reference 4.

Nuclide Specific Scaling Factor (= RF_{eff}) (column 3):
The group specific release fraction from the gap and melted fuel to the coolant is used to scale the nuclides using the following formula:
$RF_{eff} = [RF_{gap} + f_{melt} * RF_{melt}]$*specfrac/DF correction

Ref.

where RF_{eff} = effective release fraction
RF_{gap} = release fraction from gap
RF_{melt} = release fraction from melted fuel
f_{melt} = fraction of fuel melted
specfrac = species fraction (=.03 organic iodines, 0.97 elemental iodine, 1.0 others0

Unit 1

	specfrac	RF_{gap}	RF_{melt}	f_{melt}	DF correction	RF_{eff}
Noble Gas	1.0	0.1	1.0	0	1	0.1
Iodine	0.97	0.1	0.5	0	1	0.097
Iodine org*	0.03	0.1	0.5	0	100	3.0E-05
Cs, Rb	1.0	0.12	0.25	0	1	0.12

Unit 2

	specfrac	RF_{gap}	RF_{melt}	f_{melt}	DF correction	RF_{eff}
Noble Gas	1	0.1	1	0.0077	1	0.1077
Iodine	0.97	0.1	0.5	0.0077	1	0.10073
Iodine org*	0.03	0.1	0.5	0.0077	100	3.116E-05
Cs, Rb	1	0.12	0.25	0.0077	1	0.121925

*Recognizing that the elemental iodine is treated with a DF of 100, the scaling factor for organic iodine is modified by (1/100).

The results of this calculation can be seen in Table 2 below.

Project: Nine Mile Point Nuclear Station Unit: __2__ Disposition: ____

Originator/Date Design Input Compilation and	Reviewer/Date	Calculation No.	Revision
Case 1: M. Berg 5/29/2007 Case 2: J. Metcalf 5/29/2007	Case 1: J. Metcalf 5/29/2007 Case 2: M. Berg 5/29/2007	H21C-103	0

Ref.

Table 2a: CRDA Case 1 Dose Analysis Results U1 CRDA/U2 Control Room

NMP1 CRDA/U2 CR		EAB	LPZ	CR	
Dispersion (X/Qs) =		1.90E-04	1.63E-05	1.31E-03	sec/m3
CR Vol =	202000	ft3 w/ finite volume gamma correction =			0.0529555
Scaling Factor 1 =		1887	MW(t)		
Scaling Factor 2 =		1.8	Peaking Factor		
Scaling Factor 3 =		2.60E-04	(0.026 core x 0.01 release)		
DF for Elemental I =		100	DF for Alkali Metals =	1.00E+04	

Units >> Nuclide	Source: Ci/MW(t)	Nuclide-Specific Scaling Factor	WB DCF rem-m3 / Ci-sec	CEDE DCF rem/Ci	TEDE DCF rem-m3 / Ci-sec	CR DCF rem-m3 / Ci-sec	EAB TEDE rem	LPZ TEDE rem	CR TEDE rem
Kr83m	3.27E+03	0.1	5.6E-06	0	5.55E-06	2.939E-07	3.05E-07	2.61E-08	1.11E-07
Kr85m	6.82E+03	0.1	0.0277	0	0.0277	0.0014669	3.17E-03	2.72E-04	1.16E-03
Kr85	3.93E+02	0.1	0.00044	0	0.00044	2.33E-05	2.90E-06	2.49E-07	1.06E-06
Kr87	1.30E+04	0.1	0.152	0	0.152	0.0080492	3.32E-02	2.84E-03	1.21E-02
Kr88	1.83E+04	0.1	0.501	8.36E+01	0.53026	0.0557907	1.63E-01	1.40E-02	1.18E-01
Kr89	2.22E+04	0.1	0.323	0	0.323	0.0171046	1.20E-01	1.03E-02	4.39E-02
Xe131m	3.04E+02	0.1	0.00144	0	0.00144	7.626E-05	7.35E-06	6.30E-07	2.68E-06
Xe133m	1.63E+03	0.1	0.00507	0	0.00507	0.0002685	1.39E-04	1.19E-05	5.06E-05
Xe133	5.27E+04	0.1	0.00577	0	0.00577	0.0003056	5.10E-03	4.38E-04	1.86E-03
Xe135m	1.09E+04	0.1	0.0755	0	0.0755	0.0039981	1.38E-02	1.18E-03	5.04E-03
Xe135	1.91E+04	0.1	0.044	0	0.044	0.00233	1.41E-02	1.21E-03	5.15E-03
Xe137	4.80E+04	0.1	0.0303	0	0.0303	0.0016046	2.44E-02	2.09E-03	8.91E-03
Xe138	4.50E+04	0.1	0.213	0	0.213	0.0112795	1.61E-01	1.38E-02	5.87E-02
I131Org	2.71E+04	0.00003	0.0673	3.29E+04	11.5823	11.518564	1.58E-03	1.36E-04	1.08E-02
I132Org	3.92E+04	0.00003	0.414	3.81E+02	0.54735	0.1552736	1.08E-04	9.27E-06	2.11E-04
I133Org	5.51E+04	0.00003	0.109	5.85E+03	2.1565	2.0532721	5.98E-04	5.13E-05	3.93E-03
I134Org	6.03E+04	0.00003	0.481	1.31E+02	5.27E-01	0.0713216	1.60E-04	1.37E-05	1.49E-04
I135Org	5.16E+04	0.00003	0.307	1.23E+03	0.7375	0.4467573	1.92E-04	1.64E-05	8.00E-04
I131Elem	2.71E+04	0.097	0.0673	3.29E+04	11.5823	11.518564	5.11E-02	4.38E-03	3.50E-01
I132Elem	3.92E+04	0.097	0.414	3.81E+02	0.54735	0.1552736	3.49E-03	3.00E-04	6.83E-03
I133Elem	5.51E+04	0.097	0.109	5.85E+03	2.1565	2.0532721	1.93E-02	1.66E-03	1.27E-01
I134Elem	6.03E+04	0.097	0.481	1.31E+02	0.52685	0.0713216	5.17E-03	4.44E-04	4.83E-03
I135Elem	5.16E+04	0.097	0.307	1.23E+03	7.38E-01	0.4467573	6.19E-03	5.31E-04	2.59E-02
Rb86	7.29E+01	0.12	0.0178	6.62E+03	2.3348	2.3179426	3.43E-07	2.94E-08	2.35E-06
Cs134	7.29E+03	0.12	0.28	4.63E+04	16.485	16.219828	2.42E-04	2.08E-05	1.64E-03
Cs136	2.28E+03	0.12	0.392	7.33E+03	2.9575	2.5862585	1.36E-05	1.16E-06	8.19E-05
Cs137	4.35E+03	0.12	0.101	3.19E+04	11.266	11.170349	9.87E-05	8.47E-06	6.75E-04
Cs138	0	0.12	0.4255	1.15E+02	0.465904	0.0629365	0.00E+00	0.00E+00	0.00E+00
						Tot TEDE =	6.26E-01	5.37E-02	7.88E-01

Project: Nine Mile Point Nuclear Station Unit: __2__ Disposition: ____

Originator/Date Design Input Compilation and	Reviewer/Date	Calculation No.	Revision
Case 1: M. Berg 5/29/2007 Case 2: J. Metcalf 5/29/2007	Case 1: J. Metcalf 5/29/2007 Case 2: M. Berg 5/29/2007	H21C-103	0

Ref.

Table 2b: CRDA Case 1 Dose Analysis Results U2 CRDA/U1 Control Room

NMP2 CRDA/U1 CR	EAB	LPZ	CR		
Dispersion (X/Qs) =	1.19E-04	1.62E-05	1.90E-04	sec/m3	
CR Vol = 135000	ft3 w/ finite volume gamma correction =				0.046212004
Scaling Factor 1 =	4067	MW(t)			
Scaling Factor 2 =	1.8	Peaking Factor			
Scaling Factor 3 =	1.63E-04	(0.0163 core x 0.01 release)			
DF for Elemental I =	100	DF for Alkali Metals =	1.00E+04		

Units >> Nuclide	Source: Ci/MW(t)	Nuclide-Specific Scaling Factor	WB DCF rem-m3 / Ci-sec	CEDE DCF rem/Ci	TEDE DCF rem-m3 / Ci-sec	CR DCF rem-m3 / Ci-sec	EAB TEDE rem	LPZ TEDE rem	CR TEDE rem
Kr83m	3.27E+03	0.1077	5.6E-06	0	5.55E-06	2.56477E-07	2.78E-07	3.78E-08	2.05E-08
Kr85m	6.82E+03	0.1077	0.0277	0	0.0277	0.001280073	2.89E-03	3.93E-04	2.13E-04
Kr85	3.93E+02	0.1077	0.00044	0	0.00044	2.03333E-05	2.64E-06	3.60E-07	1.95E-07
Kr87	1.30E+04	0.1077	0.152	0	0.152	0.007024225	3.02E-02	4.11E-03	2.23E-03
Kr88	1.83E+04	0.1077	0.501	8.36E+01	0.53026	0.052412214	1.48E-01	2.02E-02	2.34E-02
Kr89	2.22E+04	0.1077	0.323	0	0.323	0.014926477	1.10E-01	1.49E-02	8.09E-03
Xe131m	3.04E+02	0.1077	0.00144	0	0.00144	6.65453E-05	6.69E-06	9.11E-07	4.94E-07
Xe133m	1.63E+03	0.1077	0.00507	0	0.00507	0.000234295	1.26E-04	1.72E-05	9.33E-06
Xe133	5.27E+04	0.1077	0.00577	0	0.00577	0.000266643	4.65E-03	6.33E-04	3.43E-04
Xe135m	1.09E+04	0.1077	0.0755	0	0.0755	0.003489006	1.26E-02	1.71E-03	9.29E-04
Xe135	1.91E+04	0.1077	0.044	0	0.044	0.002033328	1.29E-02	1.75E-03	9.48E-04
Xe137	4.80E+04	0.1077	0.0303	0	0.0303	0.001400224	2.22E-02	3.03E-03	1.64E-03
Xe138	4.50E+04	0.1077	0.213	0	0.213	0.009843157	1.47E-01	2.00E-02	1.08E-02
I131Org	2.71E+04	3.116E-05	0.0673	3.29E+04	11.5823	11.51811007	1.39E-03	1.89E-04	2.20E-03
I132Org	3.92E+04	3.116E-05	0.414	3.81E+02	0.54735	0.15248177	9.49E-05	1.29E-05	4.22E-05
I133Org	5.51E+04	3.116E-05	0.109	5.85E+03	2.1565	2.052537108	5.26E-04	7.16E-05	7.99E-04
I134Org	6.03E+04	3.116E-05	0.481	1.31E+02	5.27E-01	0.068077974	1.41E-04	1.91E-05	2.90E-05
I135Org	5.16E+04	3.116E-05	0.307	1.23E+03	0.7375	0.444687085	1.68E-04	2.29E-05	1.62E-04
I131Elem	2.71E+04	0.10073	0.0673	3.29E+04	11.5823	11.51811007	4.49E-02	6.11E-03	7.13E-02
I132Elem	3.92E+04	0.10073	0.414	3.81E+02	0.54735	0.15248177	3.07E-03	4.18E-04	1.37E-03
I133Elem	5.51E+04	0.10073	0.109	5.85E+03	2.1565	2.052537108	1.70E-02	2.31E-03	2.58E-02
I134Elem	6.03E+04	0.10073	0.481	1.31E+02	0.52685	0.068077974	4.54E-03	6.19E-04	9.38E-04
I135Elem	5.16E+04	0.10073	0.307	1.23E+03	7.38E-01	0.444687085	5.44E-03	7.41E-04	5.24E-03
Rb86	7.29E+01	0.12193	0.0178	6.62E+03	2.3348	2.317822574	2.95E-07	4.01E-08	4.67E-07
Cs134	7.29E+03	0.12193	0.28	4.63E+04	16.485	16.21793936	2.08E-04	2.83E-05	3.27E-04
Cs136	2.28E+03	0.12193	0.392	7.33E+03	2.9575	2.583615106	1.17E-05	1.59E-06	1.63E-05
Cs137	4.35E+03	0.12193	0.101	3.19E+04	11.266	11.16966741	8.48E-05	1.16E-05	1.34E-04
Cs138	0	0.12193	0.4255	1.15E+02	0.465904	0.060067208	0.00E+00	0.00E+00	0.00E+00
						Tot TEDE =	5.68E-01	7.73E-02	1.57E-01

Project: Nine Mile Point Nuclear Station Unit: __2__ Disposition: ____

Originator/Date Design Input Compilation and Case 1: M. Berg 5/29/2007 Case 2: J. Metcalf 5/29/2007	Reviewer/Date Case 1: J. Metcalf 5/29/2007 Case 2: M. Berg 5/29/2007	Calculation No. H21C-103	Revision 0

Ref.

Table 2c: CRDA Case 1 Dose Analysis Results U2 CRDA/U2 Control Room

NMP2 CRDA/ U2

CR		EAB	LPZ	CR		
Dispersion (X/Qs) =		1.19E-04	1.62E-05	1.47E-03	sec/m3	
CR Vol =	202000	ft3 w/ finite volume gamma correction =				0.052955
Scaling Factor 1 =		4067	MW(t)			
Scaling Factor 2 =		1.8	Peaking Factor			
Scaling Factor 3 =		1.63E-04	(0.0163 core x 0.01 release)			
DF for Elemental I =		100	DF for Alkali Metals =		1.00E+04	

Units >> Nuclide	Source: Ci/MW(t)	Nuclide-Specific Scaling Factor	WB DCF rem-m3 / Ci-sec	CEDE DCF rem/Ci	TEDE DCF rem-m3 / Ci-sec	CR DCF rem-m3 / Ci-sec	EAB TEDE rem	LPZ TEDE rem	CR TEDE rem
Kr83m	3.27E+03	0.1077	5.6E-06	0	5.55E-06	2.94E-07	2.78E-07	3.78E-08	1.82E-07
Kr85m	6.82E+03	0.1077	0.0277	0	0.0277	0.001467	2.89E-03	3.93E-04	1.89E-03
Kr85	3.93E+02	0.1077	0.00044	0	0.00044	2.33E-05	2.64E-06	3.60E-07	1.73E-06
Kr87	1.30E+04	0.1077	0.152	0	0.152	0.008049	3.02E-02	4.11E-03	1.98E-02
Kr88	1.83E+04	0.1077	0.501	8.36E+01	0.53026	0.055791	1.48E-01	2.02E-02	1.93E-01
Kr89	2.22E+04	0.1077	0.323	0	0.323	0.017105	1.10E-01	1.49E-02	7.17E-02
Xe131m	3.04E+02	0.1077	0.00144	0	0.00144	7.63E-05	6.69E-06	9.11E-07	4.38E-06
Xe133m	1.63E+03	0.1077	0.00507	0	0.00507	0.000268	1.26E-04	1.72E-05	8.27E-05
Xe133	5.27E+04	0.1077	0.00577	0	0.00577	0.000306	4.65E-03	6.33E-04	3.04E-03
Xe135m	1.09E+04	0.1077	0.0755	0	0.0755	0.003998	1.26E-02	1.71E-03	8.23E-03
Xe135	1.91E+04	0.1077	0.044	0	0.044	0.00233	1.29E-02	1.75E-03	8.41E-03
Xe137	4.80E+04	0.1077	0.0303	0	0.0303	0.001605	2.22E-02	3.03E-03	1.45E-02
Xe138	4.50E+04	0.1077	0.213	0	0.213	0.01128	1.47E-01	2.00E-02	9.59E-02
I131Org	2.71E+04	3.116E-05	0.0673	3.29E+04	11.5823	11.51856	1.39E-03	1.89E-04	1.71E-02
I132Org	3.92E+04	3.116E-05	0.414	3.81E+02	0.54735	0.155274	9.49E-05	1.29E-05	3.33E-04
I133Org	5.51E+04	3.116E-05	0.109	5.85E+03	2.1565	2.053272	5.26E-04	7.16E-05	6.18E-03
I134Org	6.03E+04	3.116E-05	0.481	1.31E+02	5.27E-01	0.071322	1.41E-04	1.91E-05	2.35E-04
I135Org	5.16E+04	3.116E-05	0.307	1.23E+03	0.7375	0.446757	1.68E-04	2.29E-05	1.26E-03
I131Elem	2.71E+04	0.10073	0.0673	3.29E+04	11.5823	11.51856	4.49E-02	6.11E-03	5.52E-01
I132Elem	3.92E+04	0.10073	0.414	3.81E+02	0.54735	0.155274	3.07E-03	4.18E-04	1.08E-02
I133Elem	5.51E+04	0.10073	0.109	5.85E+03	2.1565	2.053272	1.70E-02	2.31E-03	2.00E-01
I134Elem	6.03E+04	0.10073	0.481	1.31E+02	0.52685	0.071322	4.54E-03	6.19E-04	7.60E-03
I135Elem	5.16E+04	0.10073	0.307	1.23E+03	7.38E-01	0.446757	5.44E-03	7.41E-04	4.07E-02
Rb86	7.29E+01	0.12193	0.0178	6.62E+03	2.3348	2.317943	2.95E-07	4.01E-08	3.61E-06
Cs134	7.29E+03	0.12193	0.28	4.63E+04	16.485	16.21983	2.08E-04	2.83E-05	2.53E-03
Cs136	2.28E+03	0.12193	0.392	7.33E+03	2.9575	2.586259	1.17E-05	1.59E-06	1.26E-04
Cs137	4.35E+03	0.12193	0.101	3.19E+04	11.266	11.17035	8.48E-05	1.16E-05	1.04E-03
Cs138	0	0.12193	0.4255	1.15E+02	0.465904	0.062937	0.00E+00	0.00E+00	0.00E+00
						Tot TEDE	5.68E-01	7.73E-02	1.26E+00

Ref.

=

Case 2-

Step 1. Establish Base Activity Concentration

The activity released from the core for this step is calculated in Appendix B. The total activity release calculated as described above is 6.15E6 Ci. The reference concentration is calculated in Appendix C based on this activity being compressed into a single, 32 foot length of steam line with a 25.33" ID. The result is 1.94 Ci/cc or 1.94E6 Ci/m^3.

Step 2 – Dose Rate at Main Steam Line Radiation Monitor Location

Based on the dose rate analysis is described in Appendix C, the dose rate at the steam line radiation monitor location would be 0.0595 R/hr per Ci/m^3 of the CRDA release.

Step 3 - Activity Concentration Producing Safety Limit Dose Rate

Since the safety limit of the radiation monitor is 1800 mR/hr (Item 7.3 of Reference 7) or ~1.8 R/hr, the 0.0595 R/hr per Ci/m^3 value means that a concentration greater than 1.8/0.0595 = 30.25 Ci/m^3 would be sufficient to terminate mechanical vacuum pump operation. Therefore, a concentration of 30.25 Ci/m^3 = 0.857 Ci/ft^3 is assumed in the dose analysis.

Step 4 – Source Volume Needed to Contain Source

The source is 6.15E6 Ci at a concentration of 0.857 Ci/ft^3. The volume must effectively be 7.17E6 ft^3.

Step 5 – Maximum Steam Volumetric Flow for Continued Mechanical Vacuum Pump Operation

The maximum reactor power and minimum pressure that would be consistent with mechanical vacuum pump operation would be 5% and 300 psig, respectively. These conditions are taken from the assessment done for Unit 1 described in Attachment 3 to Reference 8. The corresponding steam flow for Unit 2 is based on the rated power of 3467 MWt multiplied by 1.15 in anticipation of a 15% power uprate. Applying the identical approach to that of Attachment 3 to Reference 8, the resulting steam flow is 5.99E5 lbm/hr. The corresponding volumetric flow (with saturated steam specific volume at 300 psig = 1.47 ft^3/lbm) is:

Steam volumetric flow = 5.99E5 lbm/hr x 1.47 ft^3/lbm = 8.805E5 cfh = 14680 cfm.

Step 6 – Perform Dose Analysis with RADTRAD and STARDOSE

For an activity concentration of 0.857 Ci/ft^3 and a steam volumetric flow of 14680 cfm, the activity release rate to the main condenser is:

Ref.

Activity release rate to the main condenser = 14680 cfm x 0.857 Ci/ft^3 = 1.258E4 Ci/min.

To release 99% of the activity would require 4.6 inverse exchange rates or:

Time to release 99% of activity = 4.6 x 7.17E6 ft^3/14680 cfm = 2247 min or ~37 hours.

The main condenser has a volume of 97,000 ft^3 and an exhaust rate using the mechanical vacuum pump of 5000 cfm. (Item 3.5 of Reference 7). Using these data, an analysis can be set up in which the same activity release as that analyzed in Section I is delivered to a SOURCE control volume with a volume of 7.17E6 ft^3. This volume is then emptied at a rate of 14680 cfm for 24 hours. The main condenser has a volume of 97,000 ft^3, (Item 3.7 of Reference 7), and this volume is emptied at a rate of 5000 cfm, also for 24 hours. A simple spreadsheet can be established to describe the transient normalized activity in the main condenser as an illustration of the release timing. The transient normalized activity in the main condenser is as follows (not considering decay or decontamination in the steam lines):

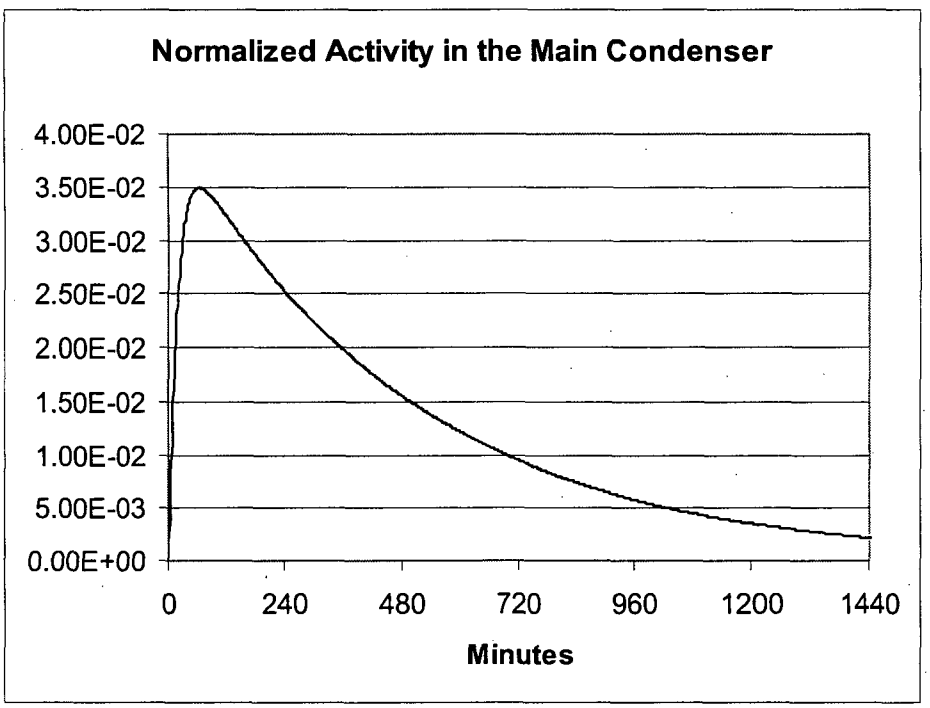

Since the normalized activity in the main condenser presented in this figure does not consider decay or decontamination in the steam line, it is strictly correct only for a radionuclide like Kr85. Since there are about 5010 Ci of Kr85 released according to Appendix B, one can expect the Kr85 activity in the main condenser for the actual dose analysis to peak at about 80 minutes with a level of about 0.035 x 5010 = 175 Ci.

Ref.

The actual result from the STARDOSE analysis at t = 1.33 hours is 174 Ci of Kr85.

It is evident from the plot of normalized activity in the main condenser that the worst two hours for the EAB dose will be from ~30 minutes to ~150 minutes when the activity in the main condenser is the highest. The actual result from the RADTRAD analysis presented in Appendix D is that the worst two hours begins at ~20 minutes; this is likely the result of the decay of short-lived radionuclides.

The control room model is similar to that in Case 1. The same steam line and main condenser DFs are applied to this analysis as are applied to the analysis of Case 1. The mechanical vacuum pump is assumed to stop at 24 hours, so the duration of release is the same as Case 1. As can be seen from the above figure, however, there is very little activity remaining in the main condenser at 24 hours in any case.

The Unit 2 power level of 4067 MWt is increased to 7321 MWt for use in RADTRAD and STARDOSE. In this way, the nuclide inventories used in the "standard" RADTRAD and STARDOSE library files (Reference 7, Item 1.2) can be used as-is; and the 1.8 peaking factor is included by using the higher power level.

The DCFs are identified in Item 9.1 and 9.2 of References 7.and 8.

The input, library, and output files for RADTRAD are presented in Appendix D. The input, library, and output files for STARDOSE are presented in Appendix E.

Conclusions

For control room operators and for the general public, the radiation dose acceptance criteria for all design-basis accidents are as defined in Reference 1. For the BWR control rod drop accident, the limits are 5 rem TEDE for Control Room and 6.3 rem TEDE for offsite locations. (For the Control Room, the exposure interval is 30 days with allowance for partial occupancy after the first 24 hours. The EAB dose is based on the worst 2-hour exposure, and the LPZ dose is based on 30-day exposure just as for the Control Room.) The analysis shows that a control rod drop accident will result in Control Room operator doses and offsite doses to the general public that are below the stated limits.

Ref.

Appendix A: Spreadsheet for the Calculation of Offsite and Control Room Doses

Background/Methodology

It is desirable for simplicity in many cases to calculate a bounding radiation dose for a given accident using several basic assumptions. These are as follows:

- It is assumed that the release of activity may be defined at the outset (i.e., there are no time-dependent mechanisms that modify the amount of activity that's released; e.g., no delayed filtration).
- It is assumed that the release is instantaneous and complete, and the transport to the receptor is instantaneous, as well. Therefore, no radioactive decay needs to be considered. Note that the activity release, A, may, in fact, occur over a given time duration, t, at a rate A/t. As long as the exposure time is equal to duration of the release, time cancels out of the integrated dose analysis.
- It is assumed that the release is limited to coolant and/or gap activity (i.e., only a limited number of radionuclides are included in the sheet).
- It is assumed that the chemical/physical form of the iodine as it is released is limited to organic and elemental.
- No credit for control room emergency ventilation (i.e., filtration) is assumed.
- It is assumed that the atmospheric dispersion for the duration of the release may be characterized by a single value of X/Q for each location (EAB, LPZ, and control room).
- It is assumed that the exchange rate of the control room with the environment is infinite so that the concentration of activity inside the control room is equal to that in the atmosphere.
- It is assumed that the breathing rate of exposed individuals is a constant 3.5E-4 m^3/sec. Effectively, this means the release actually must occur over a period of no more than eight hours in order for the LPZ dose not to be overstated.
- It is assumed that the control room occupancy factor is unity.

In addition, for the spreadsheet to be consistent with Reference 1, Dose Conversion Factors (DCFs) based on References 2 and 3 must be used. These are taken from the default TID.INP and FGR60.INP default files of Reference 4. Breathing rates and occupancy factors are taken from Reference 1.

The following section describes the development of such an Excel spreadsheet.

Ref.

Spreadsheet Development

The spreadsheet is displayed at the end of this section, just before the references.

At the top of the spreadsheet (in the first row) is the title. An example might be "NMP1 MSLB". In the second row may be found the EAB, LPZ, and control room X/Qs in units of seconds/m^3. The control room volume in ft^3 is given in the third column. It is included to provide the basis for the finite volume correction factor for gamma shine dose provided by Reference 1 (calculated to the right of the control room volume).

The next three rows provide scaling factors that apply equally to all of the radionuclides listed and to all of the calculated doses (EAB, LPZ, and control room). For example, in an FHA analysis, if the core-wide activity available for release is expressed as Ci/MWt, one scaling factor may be the power of the core, a second may be the peaking factor to account for the fact that the specific activity in the affected fuel bundles may be greater than the core average, and the third may be the fraction of the core's activity that is released from the damaged bundles (i.e., the fraction of the core activity assumed to be in the gap multiplied by the fraction of the core fuel bundles that are damaged by the drop). Space is available next to each scaling factor to annotate what each value represents.

DFs are specifically provided in the next row after the scaling factors. One DF is provided for elemental iodine and one for alkali metals (i.e., Cs and Rb).

The "Source" column (i.e., the second column) has already been mentioned. One space is provided under "Source" to identify the units of "Source". For each of the coolant and/or gap release radionuclides identified in the first column, a "Source" entry may be made.

In the third column, there is a place for scaling factors unique to individual radionuclides. For example, gap fractions that differ from the general gap fraction may be accommodated using these radionuclide-specific scaling factors. If the I-131 gap fraction is 8% vs. the general value of 5%, then the "Source" for I-131 would have to be increased by a factor of 1.6 to account for that difference. That factor may be entered in the third column.

In the fourth column, the DCFs for immersion dose are provided. As noted previously, these are taken from Reference 4 TID.INP and FGR60.INP with the multiplication of "Cloudshine-Effective" by 3.7E12 to convert Sv-m^3/Bq-sec to rem-m^3/Ci-sec. In the fifth column, the "Inhaled-Chronic-Effective" values from FGR60.INP have been multiplied by the same 3.7E12 to convert Sv/Bq to rem/Ci. Note that these DCFs include short-lived decay daughters as long as (1) the daughter has a half-life less than 90 minutes and (2) the daughter has a half-life less than 0.1 times the parent. One exception has been made to this rule. Because of its importance as a

Ref.

decay daughter, the DCFs for Rb-88 have been added to those for Kr-88 even though the half-life of Rb-88 (17.8 minutes) is slightly greater than 10% of its parent Kr-88 (170.4 minutes).

In the sixth column, a TEDE DCF is prepared which is the sum of the immersion DCF and the inhalation DCF times the assumed breathing rate of 3.5E-4 m^3/sec.

In the seventh column, a control room DCF is defined which is similar to the TEDE DCF. However, the immersion DSF is diminished by the finite volume correction factor defined as the following in Reference 1:

$$DDE_{finite} = \frac{DDE_{\infty} V^{0.338}}{1173}$$

For a control room volume of 135,000 ft^3, for example, the factor is 0.0462. Note that this factor appears next to the control room volume at the top of the spreadsheet. It is ~unity for a control room volume of 1.2E9 ft^3.

The eighth column is the EAB dose, the product of Columns 2, 3, and 6, the three general scaling factors, and the EAB X/Q. Note that if a release of the activity, A, in Column 2 occurs over time, t, the release rate is A/t assuming a unit scaling factor in Column 3. When multiplied by the X/Q, the product is the concentration present at the X/Q location for the time, t (i.e., for the duration of the release). When multiplied by the DCF (Column 6) in units of rem-volume/Ci-time, the result is a dose rate for the duration, t. As long as it is assumed that the exposure duration, t', is the same as release duration, t, then the immersion + inhalation dose is simply the product as just described. In the last row of Column 8, the EAB dose is summed for all radionuclides in Column 1. Note that in calculating the EAB dose, the elemental iodine dose is reduced by the DF for elemental iodine and the alkali metal dose is reduced by the DF for alkali metals.

In Column 9, the Column 8 results are adjusted by the ratio of the LPZ X/Q to the EAB X/Q to obtain the LPZ dose.

Finally, in Column 10, the Column 8 results are adjusted by the ratio of the control room X/Q to the EAB X/Q and by the ratio of the control room DCF to the TEDE DCF to obtain the control room dose contribution for each radionuclide. As with the EAB and the LPZ doses, these are summed at the bottom of column to obtain the total control room TEDE.

ENGINEERING SERVICES	CALCULATION CONTINUATION SHEET	Page A4 (Next A5)

Project: Nine Mile Point Nuclear Station Unit: 2 Disposition: ____

Originator/Date	Reviewer/Date	Calculation No.	Revision
J. Metcalf 5/29/2007	M. Berg 5/29/2007	H21C-103	0

Ref.

Spreadsheet for Simplified Dose Evaluation

TITLE	EAB	LPZ	CR		
Dispersion (X/Qs) =	x.xxE-xx	x.xxE-xx	x.xxE-xx	sec/m3	
CR Vol = 1.20E+09	ft3 w/ finite volume gamma correction =				0.999
Scaling Factor 1 =	1				
Scaling Factor 2 =	1				
Scaling Factor 3 =	1				
DF for Elemental I =	1	DF for Alkali Metals =	1		

Source:		Nuclide-Specific Scaling Factor	WB DCF rem-m3 Ci-sec	CEDE DCF rem/Ci	TEDE DCF rem-m3 Ci-sec	CR DCF rem-m3 Ci-sec	EAB TEDE rem	LPZ TEDE rem	CR TEDE rem
Units >>									
Nuclide									
Kr83m	0	1	5.55E-06	0	5.55E-06	5.54E-06	0.00E+00	0.00E+00	0.00E+00
Kr85m	0	1	0.0277	0	0.0277	0.027666	0.00E+00	0.00E+00	0.00E+00
Kr85	0	1	0.00044	0	0.00044	0.000439	0.00E+00	0.00E+00	0.00E+00
Kr87	0	1	0.152	0	0.152	0.151813	0.00E+00	0.00E+00	0.00E+00
Kr88	0	1	0.501	8.36E+01	0.53026	0.529643	0.00E+00	0.00E+00	0.00E+00
Kr89	0	1	0.323	0	0.323	0.322603	0.00E+00	0.00E+00	0.00E+00
Xe131m	0	1	0.00144	0	0.00144	0.001438	0.00E+00	0.00E+00	0.00E+00
Xe133m	0	1	0.00507	0	0.00507	0.005064	0.00E+00	0.00E+00	0.00E+00
Xe133	0	1	0.00577	0	0.00577	0.005763	0.00E+00	0.00E+00	0.00E+00
Xe135m	0	1	0.0755	0	0.0755	0.075407	0.00E+00	0.00E+00	0.00E+00
Xe135	0	1	0.044	0	0.044	0.043946	0.00E+00	0.00E+00	0.00E+00
Xe137	0	1	0.0303	0	0.0303	0.030263	0.00E+00	0.00E+00	0.00E+00
Xe138	0	1	0.213	0	0.213	0.212738	0.00E+00	0.00E+00	0.00E+00
I131Org	0	1	0.0673	3.29E+04	11.5823	11.58222	0.00E+00	0.00E+00	0.00E+00
I132Org	0	1	0.414	3.81E+02	0.54735	0.546841	0.00E+00	0.00E+00	0.00E+00
I133Org	0	1	0.109	5.85E+03	2.1565	2.156366	0.00E+00	0.00E+00	0.00E+00
I134Org	0	1	0.481	1.31E+02	5.27E-01	0.526258	0.00E+00	0.00E+00	0.00E+00
I135Org	0	1	0.307	1.23E+03	0.7375	0.737122	0.00E+00	0.00E+00	0.00E+00
I131Elem	0	1	0.0673	3.29E+04	11.5823	11.58222	0.00E+00	0.00E+00	0.00E+00
I132Elem	0	1	0.414	3.81E+02	0.54735	0.546841	0.00E+00	0.00E+00	0.00E+00
I133Elem	0	1	0.109	5.85E+03	2.1565	2.156366	0.00E+00	0.00E+00	0.00E+00
I134Elem	0	1	0.481	1.31E+02	0.52685	0.526258	0.00E+00	0.00E+00	0.00E+00
I135Elem	0	1	0.307	1.23E+03	7.38E-01	0.737122	0.00E+00	0.00E+00	0.00E+00
Rb86	0	1	0.0178	6.62E+03	2.3348	2.334778	0.00E+00	0.00E+00	0.00E+00
Cs134	0	1	0.28	4.63E+04	16.485	16.48466	0.00E+00	0.00E+00	0.00E+00
Cs136	0	1	0.392	7.33E+03	2.9575	2.957018	0.00E+00	0.00E+00	0.00E+00
Cs137	0	1	0.101	3.19E+04	11.266	11.26588	0.00E+00	0.00E+00	0.00E+00
Cs138	0	1	0.4255	1.15E+02	0.465904	0.46538	0.00E+00	0.00E+00	0.00E+00
						Total TEDE	**0.00E+00**	**0.00E+00**	**0.00E+00**

Ref.

References

A-1 Regulatory Guide 1.183, "Alternative Radiological Source Terms for Evaluating Design Basis Accidents at Nuclear Power Reactors", July 2000

A-2 K.F. Eckerman et al., "Limiting Values of Radionuclide Intake and Air Concentration and Dose Conversion Factors for Inhalation, Submersion, and Ingestion," Federal Guidance Report 11, EPA-520/1-88-020, Environmental Protection Agency, 1988.

A-3 K.F. Eckerman and J.C. Ryman, "External Exposure to Radionuclides in Air, Water, and Soil," Federal Guidance Report 12, EPA-402-R-93-081, Environmental Protection Agency, 1993

A-4 NUREG/CR-6604, "RADTRAD: A Simplified Model for RADionuclide Transport and Removal And Dose Estimation", December 1997

Ref.

Appendix B - Calculation of Reference Activity Release for Main Steam Line Radiation Monitor Gamma Dose Calculation

Objective

In this appendix, the activity release is calculated for a Unit 2 CRDA with a peaking factor of 1.8, a power level of 4067 MWt, and release fractions from the main body of the calculation. This analysis only applies to a Unit 2 accident. The Unit 1 MSL radiation monitor calculation is found in the Unit 1 CRDA calculation.

Calculation

The calculation is done using the following spreadsheet. The radionuclides are identified in the first column. In the second column, the fraction of the core released is given. The values from this column are calculated by multiplying the failed fuel fraction (1.63%) by the group specific effective release fraction from the gap and fuel melt to the coolant. The effective release fraction was determined in the main body of the text. Note, too, that the iodine is broken down into 3% organic and 97% elemental. As an example, the release fraction for elemental I131 is calculated using the following:

$$(1.63\%)*(0.97)\ [0.1*(1-0.0077)+0.5*0.0077)] = 1.6298E\text{-}03$$

In the third column, the Ci/MW(t) are the core inventories taken from Item 1.2 of Reference 7 of the main body.

These are multiplied by the power level of 4067 MWt and the peaking factor of 1.8 to obtain the fourth column. The total of the fourth column total is 6.15E+06 Ci. The last column is the percentage of the total Ci released for each radionuclide considered.

ENGINEERING SERVICES	CALCULATION CONTINUATION SHEET	Page __B2___ (Next _C1___)

Project: Nine Mile Point Nuclear Station Unit: __2__ Disposition: ____

Originator/Date	Reviewer/Date	Calculation No.	Revision
J. Metcalf 5/29/2007	M. Berg 5/29/2007	H21C-103	0

Ref.

Unit 2 Activities Released for CRDA:

Nuclide	Rel Fract	Ci/MWt	Ci	Percentage
Kr83m	1.74E-03	3270	4.17E+04	4.17E+04
Kr85m	1.74E-03	6820	8.70E+04	8.70E+04
Kr85	1.74E-03	393	5.01E+03	5.01E+03
Kr87	1.74E-03	13000	1.66E+05	1.66E+05
Kr88	1.74E-03	18300	2.33E+05	2.33E+05
Kr89	1.74E-03	22200	2.83E+05	2.83E+05
Xe131m	1.74E-03	304	3.88E+03	3.88E+03
Xe133m	1.74E-03	1630	2.08E+04	2.08E+04
Xe133	1.74E-03	52700	6.72E+05	6.72E+05
Xe135m	1.74E-03	10900	1.39E+05	1.39E+05
Xe135	1.74E-03	19100	2.44E+05	2.44E+05
Xe137	1.74E-03	48000	6.12E+05	6.12E+05
Xe138	1.74E-03	45000	5.74E+05	5.74E+05
I131Org	5.04E-05	27100	1.00E+04	1.00E+04
I132Org	5.04E-05	39200	1.45E+04	1.45E+04
I133Org	5.04E-05	55100	2.03E+04	2.03E+04
I134Org	5.04E-05	60300	2.23E+04	2.23E+04
I135Org	5.04E-05	51600	1.90E+04	1.90E+04
I131Elem	1.63E-03	27100	3.23E+05	3.23E+05
I132Elem	1.63E-03	39200	4.68E+05	4.68E+05
I133Elem	1.63E-03	55100	6.57E+05	6.57E+05
I134Elem	1.63E-03	60300	7.19E+05	7.19E+05
I135Elem	1.63E-03	51600	6.16E+05	6.16E+05
Rb86	1.97E-03	72.9	1.05E+03	1.05E+03
Cs134	1.97E-03	7290	1.05E+05	1.05E+05
Cs136	1.97E-03	2280	3.29E+04	3.29E+04
Cs137	1.97E-03	4350	6.28E+04	6.28E+04
Total			**6.15E+06**	100.00%

Appendix C: Steam Line Radiation Monitor Response

The Main Steam Radiation Monitor response to radioisotopes in the Main Steam Lines is investigated here. The MicroShield 7 model of the Main Steam Lines is based on information found in Reference C-1 (relevant pages attached to ref. C2). The model has been baselined against the results of Reference C-1. A CRDA source spectra is then used in the MicroShield 7 model of the Main Steam Lines to predict the (mR/hr)/(uCi/cc) response (calibration factor) for the Main Steam Line Radiation Monitor exposed to the CRDA activity mix.

Base Geometry (Normal Source)

The NMP Unit 2 Main Steam Radiation Monitors have the following configuration relative to the Main Steam Lines (all details and dimensions taken from Reference C-2):

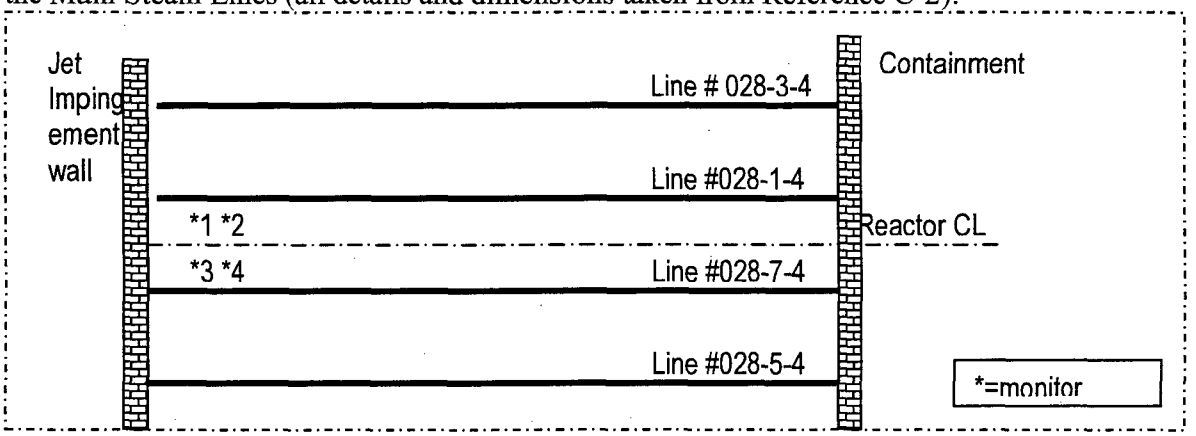

The Main Steam Lines are 28" except for the ends at the containment wall (opposite end from the radiation monitors), which are 26". The 26" lines will be assumed to be 28" for the purposes of this calculation, as this will result in negligibly higher monitor responses.

OD = 28.006" therefore IR = 28.006"/2-1.339) = 12.664"
Clad thickness = 1.339"
Line length = 32' (inside of jet impingement wall to containment wall and includes the 26" lines

Each radiation monitor is encased in a 6" Sch 40 pipe with OD=6.625", ID=6.065", clad = (6.625-6.025)/2 = 0.28", sealed at the end with a 0.5" plate. To model this configuration, a 1/2" shield is placed in between the source and the detector locations.

ENGINEERING SERVICES	CALCULATION CONTINUATION SHEET	Page __C2_ (Next __C3_)

Project: Nine Mile Point Nuclear Station Unit: __2__ Disposition: ___

Originator/Date	Reviewer/Date	Calculation No.	Revision
M. Berg 5/29/2007	J. Metcalf 5/29/2007	H21C-103	0

Ref.

Normal Steam Density: 0.036 g/cc (saturation at operating pressure of 1003 psia – refer to Reference C-1)
CRDA Steam Density: 0.011 g/cc (saturation at assumed CRDA pressure of 300 psig – see main body of calculation)

Due to the size of the line, the default Microshield source meshing is increased to a 20x20x50 mesh.

A single Main Steam Line is modeled with four dose points representing the location of each detector relative to all four of the lines.

Dose Point Locations (taken from Reference C-1 and C-2, units in cm):
1: (370.84, 916.94, 190.66)
2: (325.12, 916.94, 190.66)
3: (190.66, 916.94, 30.48)*
4: (76.2, 916.94, 190.66)

* note: Dose Point #3 x and z coordinates were intentionally swapped from the Reference C-1 standard due to MicroShield 7 modeling constraints. MicroShield 7 does not allow dose points to be "behind" the shield (which is the case with the original coordinates). Due to symmetry, the coordinates may be swapped. This is not strictly correct with a shield in place, since the angle of the ray tracing through the shield will be different, however several test cases showed that there is not a large difference in results by swapping the coordinates.

The default source meshing is expanded to a 20x20x50 mesh since the source is so large.

Baseline Validation of the Geometry

From Reference C-1 (relevant pages attached to Reference C-2), the N-16 source of 3.6 μCi/cc is used. Using the same source in the above model yields the following results:

Normal Operation Baseline of Model

dose pt	original	MicroShield	% diff
1	0.174	0.1726	-0.8046
2	0.196	0.1935	-1.27551
3	0.387	0.4563	17.90698
4	0.424	0.2587	-38.9858
total	1.181	1.0811	-8.45893

The Dose Points 1 and 2 in the MicroShield model are almost exactly the same as the baseline

Ref.

model. The detectors 3 and 4 are not as good because the original model has a more complex arrangement around the detector not possible to model in MicroShield 7. However, overall, there is less than a 7% error in the MicroShield 7 model, therefore the modeling is good enough for the purposes of this calculation. In particular, the model underpredicts the response, which is conservative in terms of determining the Calibration Factor.

Calibration Factor

Using the following source term from Appendix B:

	Ci released
Kr83m	4.17E+04
Kr85m	8.70E+04
Kr85	5.01E+03
Kr87	1.66E+05
Kr88	2.33E+05
Kr89	2.83E+05
Xe131m	3.88E+03
Xe133m	2.08E+04
Xe133	6.72E+05
Xe135m	1.39E+05
Xe135	2.44E+05
Xe137	6.12E+05
Xe138	5.74E+05
I131	3.33E+05
I132	4.82E+05
I133	6.78E+05
I134	7.42E+05
I135	6.35E+05
Rb86	1.05E+03
Cs134	1.05E+05
Cs136	3.29E+04
Cs137	6.28E+04
sum	6.15E+06

MicroShield results using Normal Model with CRDA source

dose point	mR/hr
1	1.929E+07
2	2.146E+07
3	5.230E+07
4	2.235E+07
sum	1.154E+08

ENGINEERING SERVICES	CALCULATION CONTINUATION SHEET	Page __C4_ (Next __C5_)

Project: Nine Mile Point Nuclear Station Unit: __2__ Disposition: ___

Originator/Date	Reviewer/Date	Calculation No.	Revision
M. Berg 5/29/2007	J. Metcalf 5/29/2007	H21C-103	0

Ref.

From the MicroShield output, the volume is 3.17E6 cc

The calibration factor is then:

$$\frac{4 \text{ lines} * (1.154E8 \text{ mR/hr} / 1000 \text{ R/mR})}{4 * (6.15E6 \text{ Ci}*1E6 \ \mu\text{Ci/Ci}) / 3.17E6 \text{ cc}} = \mathbf{5.95E\text{-}2\ (R/hr)/(\mu Ci/cc) = (5.95E\text{-}2\ R/hr)/(Ci/m^3)}$$

where the Ci/m^3 must be assumed to exist in all four steam lines in the dose analysis (i.e., it is multiplied by the total steam flow rate to obtain the activity release per unit time).

References

C-1. Calculation 12177-PR(C)-28-W R0 "Dose Rate at the Rad. Monitors (2MSS-RE46A,B,C&D) and Dose Rate Fall-off from the Main Steam Line In the Main Steam Tunnel During Normal Operation and Post-LOCA in order to Address GE Doc. NEDO-30324 Concerns"

C-2. PSAT 3101CF.QA.03, "Design Database for Application of the Revised DBA Source Term to Nine Mile Point Unit 2", Revision 0

The following pages contain the output of the Microshield calculations:

ENGINEERING SERVICES	CALCULATION CONTINUATION SHEET	Page __C5_ (Next __C6_)

Project: Nine Mile Point Nuclear Station Unit: __2__ Disposition: ____

Originator/Date	Reviewer/Date	Calculation No.	Revision
M. Berg 5/29/2007	J. Metcalf 5/29/2007	H21C-103	0

Ref.

Microshield 7.02 Output Reference/Baseline Main Steam Line Calculation Using N-16 Source

MicroShield 7.02
Polestar Applied Technology (06-MSD-7.00-1110)

Date	By	Checked

Filename	Run Date	Run Time	Duration
ref NMP U2 Main Steam normal.ms7	May 24, 2007	6:31:14 PM	00:00:03

Project Info	
Case Title	Nine Mile Point U2
Description	Main Steam Line: normal source, reference
Geometry	7 - Cylinder Volume - Side Shields

Source Dimensions	
Height	975.36 cm (32 ft)
Radius	32.167 cm (1 ft 0.7 in)

Dose Points

A	X	Y	Z
#1	370.84 cm (12 ft 2.0 in)	916.94 cm (30 ft 1.0 in)	190.66 cm (6 ft 3.1 in)
#2	325.12 cm (10 ft 8.0 in)	916.94 cm (30 ft 1.0 in)	190.66 cm (6 ft 3.1 in)
#3	190.66 cm (6 ft 3.1 in)	916.94 cm (30 ft 1.0 in)	30.48 cm (1 ft)
#4	76.2 cm (2 ft 6.0 in)	916.94 cm (30 ft 1.0 in)	190.66 cm (6 ft 3.1 in)

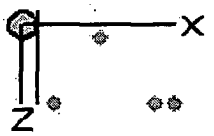

Shields

Shield N	Dimension	Material	Density
Source	3.17e+06 cm³	Water	0.036
Transition		Air	0.00122
Shield 2	1.27 cm	Iron	7.86
Air Gap		Air	0.00122
Wall Clad	3.401 cm	Iron	7.86

Source Input: Grouping Method - Actual Photon Energies

Nuclide	Ci	Bq	µCi/cm³	Bq/cm³
Ba-137m				

ENGINEERING SERVICES	CALCULATION CONTINUATION SHEET	Page __C6_ (Next __C7_)

Project: Nine Mile Point Nuclear Station Unit: __2__ Disposition: ____

Originator/Date	Reviewer/Date	Calculation No.	Revision
M. Berg 5/29/2007	J. Metcalf 5/29/2007	H21C-103	0

Ref.

Cs-134				
Cs-136				
Cs-137				
I-131				
I-132				
I-133				
I-134				
I-135				
Kr-83m				
Kr-85				
Kr-85m				
Kr-87				
Kr-88				
Kr-89				
N-16	1.1414e+001	4.2231e+011	3.6000e+000	1.3320e+005
Rb-86				
Xe-131m				
Xe-133				
Xe-133m				
Xe-135				
Xe-135m				
Xe-137				
Xe-138				

Buildup: The material reference is Shield 2
Integration Parameters

Radial	20
Circumferential	20
Y Direction (axial)	50

Results - Dose Point # 1 - (370.84,916.94,190.66) cm

Energy (MeV)	Activity (Photons/sec)	Fluence Rate MeV/cm²/sec No Buildup	Fluence Rate MeV/cm²/sec With Buildup	Exposure Rate mR/hr No Buildup	Exposure Rate mR/hr With

ENGINEERING SERVICES	CALCULATION CONTINUATION SHEET	Page __C7_ (Next __C8_)

Project: Nine Mile Point Nuclear Station Unit: __2__ Disposition: ____

Originator/Date	Reviewer/Date	Calculation No.	Revision
M. Berg 5/29/2007	J. Metcalf 5/29/2007	H21C-103	0

Ref.

					Buildup
1.7548	5.490e+08	2.231e+01	6.117e+01	3.590e-02	9.845e-02
2.7412	3.210e+09	3.007e+02	6.738e+02	4.199e-01	9.410e-01
6.1292	2.914e+11	8.734e+04	1.469e+05	9.428e+01	1.586e+02
6.3342	6.787e+08	2.115e+02	3.525e+02	2.262e-01	3.770e-01
7.1151	2.112e+10	7.519e+03	1.211e+04	7.791e+00	1.255e+01
Totals	**3.169e+11**	**9.540e+04**	**1.601e+05**	**1.028e+02**	**1.726e+02**

Results - Dose Point # 2 - (325.12,916.94,190.66) cm

Energy (MeV)	Activity (Photons/sec)	Fluence Rate MeV/cm²/sec No Buildup	Fluence Rate MeV/cm²/sec With Buildup	Exposure Rate mR/hr No Buildup	Exposure Rate mR/hr With Buildup
1.7548	5.490e+08	2.477e+01	6.828e+01	3.986e-02	1.099e-01
2.7412	3.210e+09	3.348e+02	7.540e+02	4.676e-01	1.053e+00
6.1292	2.914e+11	9.755e+04	1.647e+05	1.053e+02	1.778e+02
6.3342	6.787e+08	2.363e+02	3.952e+02	2.527e-01	4.227e-01
7.1151	2.112e+10	8.399e+03	1.357e+04	8.703e+00	1.406e+01
Totals	**3.169e+11**	**1.065e+05**	**1.795e+05**	**1.148e+02**	**1.935e+02**

Results - Dose Point # 3 - (190.66,916.94,30.48) cm

Energy (MeV)	Activity (Photons/sec)	Fluence Rate MeV/cm²/sec No Buildup	Fluence Rate MeV/cm²/sec With Buildup	Exposure Rate mR/hr No Buildup	Exposure Rate mR/hr With Buildup
1.7548	5.490e+08	6.113e+01	1.633e+02	9.837e-02	2.628e-01
2.7412	3.210e+09	8.121e+02	1.787e+03	1.134e+00	2.495e+00
6.1292	2.914e+11	2.330e+05	3.885e+05	2.515e+02	4.193e+02
6.3342	6.787e+08	5.642e+02	9.320e+02	6.034e-01	9.969e-01
7.1151	2.112e+10	2.004e+04	3.201e+04	2.077e+01	3.317e+01
Totals	**3.169e+11**	**2.545e+05**	**4.234e+05**	**2.741e+02**	**4.563e+02**

Results - Dose Point # 4 - (76.2,916.94,190.66) cm

Energy (MeV)	Activity (Photons/sec)	Fluence Rate MeV/cm²/sec	Fluence Rate MeV/cm²/sec With	Exposure Rate mR/hr	Exposure Rate mR/hr

ENGINEERING SERVICES	CALCULATION CONTINUATION SHEET	Page __C8_ (Next __C9_)

Project: Nine Mile Point Nuclear Station Unit: __2__ Disposition: ____

Originator/Date	Reviewer/Date	Calculation No.	Revision
M. Berg 5/29/2007	J. Metcalf 5/29/2007	H21C-103	0

Ref.

		No Buildup	Buildup	No Buildup	With Buildup
1.7548	5.490e+08	2.392e+01	8.042e+01	3.850e-02	1.294e-01
2.7412	3.210e+09	3.630e+02	9.598e+02	5.069e-01	1.341e+00
6.1292	2.914e+11	1.173e+05	2.204e+05	1.267e+02	2.379e+02
6.3342	6.787e+08	2.847e+02	5.286e+02	3.045e-01	5.653e-01
7.1151	2.112e+10	1.016e+04	1.812e+04	1.053e+01	1.878e+01
Totals	**3.169e+11**	**1.282e+05**	**2.400e+05**	**1.380e+02**	**2.587e+02**

Ref.

Microshield 7.02 Output Main Steam Line Calculation Using CRDA Source

MicroShield 7.02
Polestar Applied Technology (06-MSD-7.00-1110)

Date	By	Checked

Filename	Run Date	Run Time	Duration
NMP U2 Main Steam normal_CRDA.ms7	May 24, 2007	5:57:49 PM	00:00:09

Project Info	
Case Title	Nine Mile Point U2
Description	Main Steam Line with CRDA Source
Geometry	7 - Cylinder Volume - Side Shields

Source Dimensions	
Height	975.36 cm (32 ft)
Radius	32.167 cm (1 ft 0.7 in)

Dose Points

A	X	Y	Z
#1	370.84 cm (12 ft 2.0 in)	916.94 cm (30 ft 1.0 in)	190.66 cm (6 ft 3.1 in)
#2	325.12 cm (10 ft 8.0 in)	916.94 cm (30 ft 1.0 in)	190.66 cm (6 ft 3.1 in)
#3	190.66 cm (6 ft 3.1 in)	916.94 cm (30 ft 1.0 in)	30.48 cm (1 ft)
#4	76.2 cm (2 ft 6.0 in)	916.94 cm (30 ft 1.0 in)	190.66 cm (6 ft 3.1 in)

Shields

Shield N	Dimension	Material	Density
Source	3.17e+06 cm³	Water	0.011
Transition		Air	0.00122
Shield 2	1.27 cm	Iron	7.86
Air Gap		Air	0.00122
Wall Clad	3.401 cm	Iron	7.86

Source Input: Grouping Method - Standard Indices
Number of Groups: 25
Lower Energy Cutoff: 0.015
Photons < 0.015: Included

ENGINEERING SERVICES	CALCULATION CONTINUATION SHEET	Page __C10_ (Next __C11_)

Project: Nine Mile Point Nuclear Station Unit: __2__ Disposition: ____

Originator/Date	Reviewer/Date	Calculation No.	Revision
M. Berg 5/29/2007	J. Metcalf 5/29/2007	H21C-103	0

Ref.

Library: Grove				
Nuclide	Ci	Bq	μCi/cm³	Bq/cm³
Ba-137m				
Cs-134	1.0500e+005	3.8850e+015	3.3118e+004	1.2254e+009
Cs-136	3.2900e+004	1.2173e+015	1.0377e+004	3.8395e+008
Cs-137	6.2800e+004	2.3236e+015	1.9808e+004	7.3289e+008
I-131	3.3300e+005	1.2321e+016	1.0503e+005	3.8862e+009
I-132	4.8200e+005	1.7834e+016	1.5203e+005	5.6250e+009
I-133	6.7800e+005	2.5086e+016	2.1385e+005	7.9124e+009
I-134	7.4200e+005	2.7454e+016	2.3403e+005	8.6593e+009
I-135	6.3500e+005	2.3495e+016	2.0029e+005	7.4106e+009
Kr-83m	4.1700e+004	1.5429e+015	1.3153e+004	4.8665e+008
Kr-85	5.0100e+003	1.8537e+014	1.5802e+003	5.8468e+007
Kr-85m	8.7000e+004	3.2190e+015	2.7441e+004	1.0153e+009
Kr-87	1.6600e+005	6.1420e+015	5.2358e+004	1.9373e+009
Kr-88	2.3300e+005	8.6210e+015	7.3491e+004	2.7192e+009
Kr-89	2.8300e+005	1.0471e+016	8.9261e+004	3.3027e+009
N-16				
Rb-86	1.0500e+003	3.8850e+013	3.3118e+002	1.2254e+007
Xe-131m	3.8800e+003	1.4356e+014	1.2238e+003	4.5280e+007
Xe-133	6.7200e+005	2.4864e+016	2.1196e+005	7.8424e+009
Xe-133m	2.0800e+004	7.6960e+014	6.5605e+003	2.4274e+008
Xe-135	2.4400e+005	9.0280e+015	7.6960e+004	2.8475e+009
Xe-135m	1.3900e+005	5.1430e+015	4.3842e+004	1.6222e+009
Xe-137	6.1200e+005	2.2644e+016	1.9303e+005	7.1422e+009
Xe-138	5.7400e+005	2.1238e+016	1.8105e+005	6.6987e+009

Buildup: The material reference is Shield 2 Integration Parameters	
Radial	20
Circumferential	20
Y Direction (axial)	50

Results - Dose Point # 1 - (370.84,916.94,190.66) cm

Ref.

0.08	9.524e+15	1.585e-02	3.596e-02	2.508e-05	5.690e-05
0.1	2.198e+13	1.910e-01	5.604e-01	2.922e-04	8.574e-04
0.15	5.511e+15	5.000e+04	2.198e+05	8.234e+01	3.620e+02
0.2	1.504e+16	1.204e+06	6.784e+06	2.124e+03	1.197e+04
0.3	1.069e+16	5.137e+06	3.238e+07	9.745e+03	6.143e+04
0.4	2.591e+16	3.149e+07	1.924e+08	6.135e+04	3.748e+05
0.5	4.426e+16	1.017e+08	5.721e+08	1.997e+05	1.123e+06
0.6	4.143e+16	1.552e+08	7.980e+08	3.029e+05	1.558e+06
0.8	7.791e+16	6.079e+08	2.644e+09	1.156e+06	5.028e+06
1.0	3.180e+16	4.276e+08	1.618e+09	7.883e+05	2.982e+06
1.5	2.528e+16	8.584e+08	2.532e+09	1.444e+06	4.259e+06
2.0	2.139e+16	1.304e+09	3.336e+09	2.016e+06	5.159e+06
3.0	1.868e+15	2.344e+08	5.044e+08	3.180e+05	6.843e+05
4.0	4.689e+14	9.162e+07	1.770e+08	1.133e+05	2.189e+05
Totals	**3.322e+17**	**3.818e+09**	**1.241e+10**	**6.412e+06**	**2.146e+07**

Results - Dose Point # 3 - (190.66,916.94,30.48) cm

Energy (MeV)	Activity (Photons/sec)	Fluence Rate MeV/cm²/sec No Buildup	Fluence Rate MeV/cm²/sec With Buildup	Exposure Rate mR/hr No Buildup	Exposure Rate mR/hr With Buildup
0.015	4.742e+15	0.000e+00	4.429e-19	0.000e+00	3.799e-20
0.03	1.610e+16	3.873e-121	3.247e-18	3.838e-123	3.218e-20
0.04	4.601e+13	5.856e-52	1.419e-20	2.590e-54	6.274e-23
0.06	1.517e+14	2.983e-13	4.984e-13	5.925e-16	9.899e-16
0.08	9.524e+15	8.708e-02	1.958e-01	1.378e-04	3.099e-04
0.1	2.198e+13	7.784e-01	2.254e+00	1.191e-03	3.449e-03
0.15	5.511e+15	1.598e+05	6.844e+05	2.632e+02	1.127e+03
0.2	1.504e+16	3.571e+06	1.940e+07	6.302e+03	3.424e+04
0.3	1.069e+16	1.439e+07	8.664e+07	2.729e+04	1.643e+05
0.4	2.591e+16	8.575e+07	4.988e+08	1.671e+05	9.719e+05
0.5	4.426e+16	2.720e+08	1.456e+09	5.338e+05	2.858e+06
0.6	4.143e+16	4.091e+08	2.005e+09	7.986e+05	3.913e+06

ENGINEERING SERVICES	CALCULATION CONTINUATION SHEET	Page __C12_ (Next __C13_)

Project: Nine Mile Point Nuclear Station Unit: __2__ Disposition: ____

Originator/Date	Reviewer/Date	Calculation No.	Revision
M. Berg 5/29/2007	J. Metcalf 5/29/2007	H21C-103	0

Ref.

0.08	9.524e+15	1.585e-02	3.596e-02	2.508e-05	5.690e-05
0.1	2.198e+13	1.910e-01	5.604e-01	2.922e-04	8.574e-04
0.15	5.511e+15	5.000e+04	2.198e+05	8.234e+01	3.620e+02
0.2	1.504e+16	1.204e+06	6.784e+06	2.124e+03	1.197e+04
0.3	1.069e+16	5.137e+06	3.238e+07	9.745e+03	6.143e+04
0.4	2.591e+16	3.149e+07	1.924e+08	6.135e+04	3.748e+05
0.5	4.426e+16	1.017e+08	5.721e+08	1.997e+05	1.123e+06
0.6	4.143e+16	1.552e+08	7.980e+08	3.029e+05	1.558e+06
0.8	7.791e+16	6.079e+08	2.644e+09	1.156e+06	5.028e+06
1.0	3.180e+16	4.276e+08	1.618e+09	7.883e+05	2.982e+06
1.5	2.528e+16	8.584e+08	2.532e+09	1.444e+06	4.259e+06
2.0	2.139e+16	1.304e+09	3.336e+09	2.016e+06	5.159e+06
3.0	1.868e+15	2.344e+08	5.044e+08	3.180e+05	6.843e+05
4.0	4.689e+14	9.162e+07	1.770e+08	1.133e+05	2.189e+05
Totals	**3.322e+17**	**3.818e+09**	**1.241e+10**	**6.412e+06**	**2.146e+07**

Results - Dose Point # 3 - (190.66,916.94,30.48) cm

Energy (MeV)	Activity (Photons/sec)	Fluence Rate MeV/cm²/sec No Buildup	Fluence Rate MeV/cm²/sec With Buildup	Exposure Rate mR/hr No Buildup	Exposure Rate mR/hr With Buildup
0.015	4.742e+15	0.000e+00	4.429e-19	0.000e+00	3.799e-20
0.03	1.610e+16	3.873e-121	3.247e-18	3.838e-123	3.218e-20
0.04	4.601e+13	5.856e-52	1.419e-20	2.590e-54	6.274e-23
0.06	1.517e+14	2.983e-13	4.984e-13	5.925e-16	9.899e-16
0.08	9.524e+15	8.708e-02	1.958e-01	1.378e-04	3.099e-04
0.1	2.198e+13	7.784e-01	2.254e+00	1.191e-03	3.449e-03
0.15	5.511e+15	1.598e+05	6.844e+05	2.632e+02	1.127e+03
0.2	1.504e+16	3.571e+06	1.940e+07	6.302e+03	3.424e+04
0.3	1.069e+16	1.439e+07	8.664e+07	2.729e+04	1.643e+05
0.4	2.591e+16	8.575e+07	4.988e+08	1.671e+05	9.719e+05
0.5	4.426e+16	2.720e+08	1.456e+09	5.338e+05	2.858e+06
0.6	4.143e+16	4.091e+08	2.005e+09	7.986e+05	3.913e+06

Ref.

0.8	7.791e+16	1.570e+09	6.528e+09	2.987e+06	1.242e+07
1.0	3.180e+16	1.088e+09	3.951e+09	2.006e+06	7.282e+06
1.5	2.528e+16	2.133e+09	6.081e+09	3.589e+06	1.023e+07
2.0	2.139e+16	3.197e+09	7.948e+09	4.944e+06	1.229e+07
3.0	1.868e+15	5.668e+08	1.194e+09	7.690e+05	1.619e+06
4.0	4.689e+14	2.201e+08	4.175e+08	2.723e+05	5.165e+05
Totals	**3.322e+17**	**9.561e+09**	**3.019e+10**	**1.610e+07**	**5.230e+07**

Results - Dose Point # 4 - (76.2,916.94,190.66) cm

Energy (MeV)	Activity (Photons/sec)	Fluence Rate MeV/cm²/sec No Buildup	Fluence Rate MeV/cm²/sec With Buildup	Exposure Rate mR/hr No Buildup	Exposure Rate mR/hr With Buildup
0.015	4.742e+15	0.000e+00	4.089e-19	0.000e+00	3.507e-20
0.03	1.610e+16	1.945e-173	2.997e-18	1.928e-175	2.970e-20
0.04	4.601e+13	5.204e-75	1.309e-20	2.301e-77	5.791e-23
0.06	1.517e+14	6.764e-21	9.421e-20	1.343e-23	1.871e-22
0.08	9.524e+15	1.315e-05	3.211e-05	2.082e-08	5.081e-08
0.1	2.198e+13	2.847e-03	9.250e-03	4.356e-06	1.415e-05
0.15	5.511e+15	6.880e+03	3.619e+04	1.133e+01	5.960e+01
0.2	1.504e+16	3.092e+05	2.222e+06	5.458e+02	3.922e+03
0.3	1.069e+16	2.066e+06	1.739e+07	3.920e+03	3.298e+04
0.4	2.591e+16	1.551e+07	1.283e+08	3.023e+04	2.500e+05
0.5	4.426e+16	5.706e+07	4.339e+08	1.120e+05	8.516e+05
0.6	4.143e+16	9.573e+07	6.595e+08	1.869e+05	1.287e+06
0.8	7.791e+16	4.304e+08	2.458e+09	8.186e+05	4.676e+06
1.0	3.180e+16	3.341e+08	1.627e+09	6.159e+05	2.998e+06
1.5	2.528e+16	7.861e+08	2.873e+09	1.323e+06	4.835e+06
2.0	2.139e+16	1.306e+09	4.040e+09	2.020e+06	6.247e+06
3.0	1.868e+15	2.584e+08	6.493e+08	3.505e+05	8.809e+05
4.0	4.689e+14	1.058e+08	2.344e+08	1.309e+05	2.899e+05
Totals	**3.322e+17**	**3.392e+09**	**1.312e+10**	**5.592e+06**	**2.235e+07**

Ref.

Appendix D: RADTRAD CRDA Dose Analysis for Case 2

Approach

Application of the AST to the NMP CRDA Case 2 analysis involves the following steps:

- Review Regulatory Guide 1.183 (Reference 1 of the main body of the calculation) to ensure that methods being applied to the NMP LOCA analysis conform to the requirements of that document.
- Using the input data compiled in Reference 7 of the main body of the calculation, prepare a RADTRAD (Reference 2 of the main body of the calculation) analysis of the NMP LOCA radiation doses for offsite (EAB and LPZ) as well as for control room.
- Obtain the dose contribution to control room personnel from radiation sources outside the control room.
- Prepare an independent review of the overall AST dose analysis for Case 2 (Appendix E).

Model:
The activity release can be simplified to the model shown in Figure D-1 below.

Figure D-1: CRDA Case 2 Model

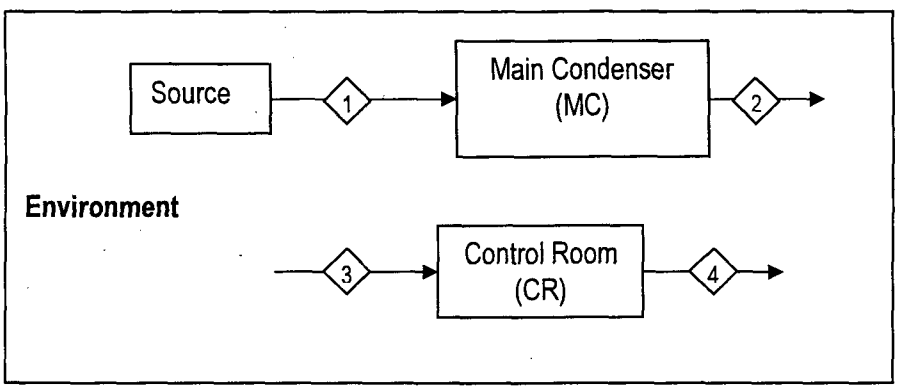

Volumes:
Source: 7.17E+06 (calculated in main body)
Main Condenser (MC): 9.7E+04 (see Design Input of main body)
Control Room (CR): 2.02E+05 (see Design Input of main body)

Junctions:

#	Pathway	Description
1	Source → MC	1.468E+04 cfm for 24 hrs (calculated in main body)
2	MC → Environment	5.00E+03 cfm for 24 hrs (see Design Input of main body)
3	Environment→ CR	1E+06, or infinite flowrate into the control room is credited per Assumption 3 in the main body of this calculation.

Ref.

4	CR→ Environment	1E+06, or infinite flowrate out of the control room is credited per Assumption 3 in the main body of this calculation

The dose calculation model consists of four control volumes representing the Source, Main Condenser (MC), Environment, and the Control Room (CR).

Control volumes are arranged as shown on Figure D-1 with the various junctions that connect them. These junctions are associated with volumetric flows which determine the rate at which radioactivity is exchanged between the control volumes. In addition, removal processes such as sedimentation in pipes and filtration are modeled within and between the control volumes, as appropriate.

The RADTRAD computer code is used to perform this dose calculation.

Input Files:

Plant Scenario File (.psf)
Each RADTRAD runs uses a specific main input file (.psf). This file contains most of the key information related to the run: control volumes, junctions, filter efficiencies, X/Qs etc.

Nuclide Information File (.nif)
The 63 isotopes used in RADTRAD are listed in the nmp2.nif file. One will find the radionuclide inventories listed as Ci/MWt in this file.

Release Fraction File (.rft):
The file nmp2-crda.rft was used. This file contains information specific to the AST source term, i.e., the fraction and timing of each release phases.

Dose Conversion Factors File (.inp)
The Dose Conversion Factors file used for this RADTRAD run is based on the Federal Guide Reports 11 and 12. The file used is nmp2.inp. This file is a modification of the default RADTRAD file called FGR11&12.INP to include additional radionuclides.

Results (Unit 2 CR):

	Case 2 RADTRAD
EAB	1.03
LPZ	1.17
Control Room	2.31

Results (Unit 2 CR for Release from Unit 1 and Unit 1 CR for Release from Unit 2):

The Unit 1 CR dose due to the Unit 1 CRDA Case 2 (from Reference 4 of the main body of the

Ref.

calculation) is 1.61 rem TEDE. The Unit 2 CR dose due to the Unit 2 CRDA Case 2 (calculated above) is 2.31 rem TEDE. A comparison of the relevant X/Qs (stack releases) is as follows (from/to):

	0-2 hours	2-8 hours	8-24 hours
U1/U1	2.27E-04 sec/m^3	1.26E-04 sec/m^3	4.30E-05 sec/m^3
U1/U2	1.10E-04 sec/m^3	6.16E-05 sec/m^3	2.31E-05 sec/m^3
U2/U2	8.03E-05 sec/m^3	4.48E-05 sec/m^3	1.68E-05 sec/m^3
U2/U1	4.18E-05 sec/m^3	2.30E-05 sec/m^3	8.94E-06 sec/m^3

This comparison shows that since:

1. No credit is taken for emergency filtration in the dose analysis of either control room (and since the finite volume gamma dose correction for Unit 1 is only slightly more favorable than for Unit 2) and
2. Acceptable CR doses have been obtained for both U1/U1 and U2/U2,

then the U1/U2 CR dose and the U2/U1 CR dose must both be acceptable. In fact, U1/U2 < U1/U1 = 1.61 rem TEDE and U2/U1 < U2/U2 = 2.13 rem TEDE.

ENGINEERING SERVICES	CALCULATION CONTINUATION SHEET	Page __D4__ (Next __D5 _)

Project: Nine Mile Point Nuclear Station Unit: __2_ Disposition: ____

Originator/Date	Reviewer/Date	Calculation No.	Revision
J. Metcalf 5/29/2007	Appendix E	H21C-103	0

Ref.

Appendix D-1: Primary Input (.psf) file, Plant Scenario File, nmp2crda-2pmp'''.psf

```
Radtrad 3.03 4/15/2001
 NMP2-CRDA-2pump-final
 Nuclide Inventory File:
 C:\RADTRAD303\defaults\nmp2.nif
 Plant Power Level:
  7.3210E+03
 Compartments:
  4
 Compartment 1:
 Source
  3
 7.1700E+06
  0
  0
  0
  0
  0
 Compartment 2:
 MC
  3
  9.7000E+04
  0
  0
  0
  0
  0
 Compartment 3:
 CR
  1
  2.0200E+05
  0
  0
  0
  0
  0
 Compartment 4:
 Environment
  2
  0.0000E+00
  0
  0
  0
  0
  0
 Pathways:
  4
```

ENGINEERING SERVICES	CALCULATION CONTINUATION SHEET	Page __D5__ (Next __D6 _)

Project: Nine Mile Point Nuclear Station Unit: __2_ Disposition: ____

Originator/Date	Reviewer/Date	Calculation No.	Revision
J. Metcalf 5/29/2007	Appendix E	H21C-103	0

Ref.

Pathway 1:
Source to MC

1
2
1
Pathway 2:
MC to Environment
2
4
1
Pathway 3:
Environment to CR
4
3
2
Pathway 4:
CR to Environment
3
4
2
End of Plant Model File
Scenario Description Name:

Plant Model Filename:

Source Term:
1
1 1.0000E+00
c:\RADTRAD303\defaults\nmp2.inp
c:\RADTRAD303\defaults\nmp2-crda.rft
0.0000E+00
1
0.0000E+00 9.7000E-01 3.0000E-02 1.0000E+00
Overlying Pool:
0
0.0000E+00
0
0
0
0
Compartments:
4
Compartment 1:
0
1
0

ENGINEERING SERVICES	CALCULATION CONTINUATION SHEET	Page __D6__ (Next __D7 _)

Project: Nine Mile Point Nuclear Station Unit: __2_ Disposition: ____

Originator/Date	Reviewer/Date	Calculation No.	Revision
J. Metcalf 5/29/2007	Appendix E	H21C-103	0

Ref.

0
0
0
0
0
0
Compartment 2:
0
1
0
0
0
0
0
0
0
Compartment 3:
0
1
0
0
0
0
0
0
0
Compartment 4:
0
1
0
0
0
0
0
0
0
Pathways:
4
Pathway 1:
0
0
1
3
0.0000E+00 1.0000E+02 1.4680E+04
2.4000E+01 1.0000E+00 0.0000E+00
7.2000E+02 1.0000E+00 0.0000E+00
1
3

ENGINEERING SERVICES	CALCULATION CONTINUATION SHEET	Page __D7__ (Next __D8 _)

Project: Nine Mile Point Nuclear Station Unit: __2_ Disposition: ____

Originator/Date	Reviewer/Date	Calculation No.	Revision
J. Metcalf 5/29/2007	Appendix E	H21C-103	0

Ref.

0.0000E+00 1.0000E+01 1.4680E+04
2.4000E+01 1.0000E+00 0.0000E+00
7.2000E+02 1.0000E+00 0.0000E+00
1
3
0.0000E+00 1.0000E+01 1.4680E+04
2.4000E+01 1.0000E+00 0.0000E+00
7.2000E+02 1.0000E+00 0.0000E+00
0
0
0
0
0
0
0
Pathway 2:
0
0
1
3
0.0000E+00 1.0000E+02 5.0000E+03
2.4000E+01 1.0000E+00 0.0000E+00
7.2000E+02 1.0000E+00 0.0000E+00
1
3
0.0000E+00 1.0000E+01 5.0000E+03
2.4000E+01 1.0000E+00 0.0000E+00
7.2000E+02 1.0000E+00 0.0000E+00
1
3
0.0000E+00 1.0000E+01 5.0000E+03
2.4000E+01 1.0000E+00 0.0000E+00
7.2000E+02 1.0000E+00 0.0000E+00
0
0
0
0
0
0
0
Pathway 3:
0
0
0
0
0
1
2

Ref.

```
 0.0000E+00  1.0000E+06  0.0000E+00  0.0000E+00  0.0000E+00
 7.2000E+02  0.0000E+00  0.0000E+00  0.0000E+00  0.0000E+00
 0
 0
 0
 0
 0
 0
Pathway 4:
 0
 0
 0
 0
 0
 1
 2
 0.0000E+00  1.0000E+06  0.0000E+00  0.0000E+00  0.0000E+00
 7.2000E+02  0.0000E+00  0.0000E+00  0.0000E+00  0.0000E+00
 0
 0
 0
 0
 0
 0
Dose Locations:
 3
Location 1:
EAB
 4
 1
 3
 0.0000E+00  2.9600E-05
 8.0000E+00  0.0000E+00
 7.2000E+02  0.0000E+00
 1
 3
 0.0000E+00  3.5000E-04
 8.0000E+00  0.0000E+00
 7.2000E+02  0.0000E+00
 0
Location 2:
LPZ
 4
 1
 7
 0.0000E+00  1.4200E-05
 3.0000E-01  1.4200E-05
 2.3000E+00  1.4200E-05
```

Ref.

```
 8.0000E+00  5.4100E-07
 2.4000E+01  2.3100E-07
 9.6000E+01  7.6500E-08
 7.2000E+02  0.0000E+00
 1
 4
 0.0000E+00  3.5000E-04
 8.0000E+00  1.8000E-04
 2.4000E+01  2.3000E-04
 7.2000E+02  0.0000E+00
 0
Location 3:
CR
 3
 0
 1
 2
 0.0000E+00  3.5000E-04
 7.2000E+02  0.0000E+00
 1
 4
 0.0000E+00  1.0000E+00
 2.4000E+01  6.0000E-01
 9.6000E+01  4.0000E-01
 7.2000E+02  0.0000E+00
Effective Volume Location:
 1
 7
 0.0000E+00  4.4800E-05
 3.0000E-01  8.0300E-05
 2.3000E+00  4.4800E-05
 8.0000E+00  1.6800E-05
 2.4000E+01  1.2000E-05
 9.6000E+01  8.8300E-06
 7.2000E+02  0.0000E+00
Simulation Parameters:
 0

Output Filename:
c:\RADTRAD303\NMP2CRDA-2pmp'''.out
 1
 1
 1
 0
 0
End of Scenario File
```

Ref.

Appendix D-2: Secondary Input (.nif, .rft, .inp) files

Appendix D-2.1: Nuclide Information File, nmp2.nif

```
Nuclide Inventory Name:
 ST general
 Power Level:
  0.1000E+01
 Nuclides:
  63
 Nuclide 001:
 Kr-83m
   1
  0.6696E+04
  0.8300E+02
  3.270E+03
 none    0.0000E+00
 none    0.0000E+00
 none    0.0000E+00
 Nuclide 002:
 Kr-85m
   1
  0.1612800000E+05
  0.8500E+02
  6.82E+03
 Kr-85   0.2100E+00
 none    0.0000E+00
 none    0.0000E+00
 Nuclide 003:
 Kr-85
   1
  0.338613048E+09
  0.8500E+02
  3.93E+02
 none    0.0000E+00
 none    0.0000E+00
 none    0.0000E+00
 Nuclide 004:
 Kr-87
   1
  0.4578000000E+04
  0.8700E+02
  1.30E+04
 Rb-87   0.1000E+01
 none    0.0000E+00
 none    0.0000E+00
 Nuclide 005:
 Kr-88
   1
```

ENGINEERING SERVICES	CALCULATION CONTINUATION SHEET	Page __D11__ (Next __D12 _)

Project: Nine Mile Point Nuclear Station Unit: __2_ Disposition: ____

Originator/Date	Reviewer/Date	Calculation No.	Revision
J. Metcalf 5/29/2007	Appendix E	H21C-103	0

Ref.

0.1022400000E+05
0.8800E+02
1.83E+04
Rb-88 0.1000E+01
none 0.0000E+00
none 0.0000E+00
Nuclide 006:
Rb-86
3
0.1612224000E+07
0.8600E+02
0.729E+02
none 0.0000E+00
none 0.0000E+00
none 0.0000E+00
Nuclide 007:
Rb-88
3
0.1062000000E+04
0.8800E+02
1.000E-06
none 0.0000E+00
none 0.0000E+00
none 0.0000E+00
Nuclide 008:
Sr-89
5
0.4363200000E+07
0.8900E+02
2.45E+04
none 0.0000E+00
none 0.0000E+00
none 0.0000E+00
Nuclide 009:
Sr-90
5
0.9189573120E+09
0.9000E+02
3.14E+03
Y-90 0.1000E+01
none 0.0000E+00
none 0.0000E+00
Nuclide 010:
Sr-91
5
0.3420000000E+05
0.9100E+02
3.10E+04

Project: Nine Mile Point Nuclear Station Unit: __2_ Disposition: ____

Originator/Date	Reviewer/Date	Calculation No.	Revision
J. Metcalf 5/29/2007	Appendix E	H21C-103	0

Ref.

```
Y-91m   0.5800E+00
Y-91    0.4200E+00
none    0.0000E+00
Nuclide 011:
Sr-92
 5
 0.9756000000E+04
 0.9200E+02
 3.38E+04
Y-92    0.1000E+01
none    0.0000E+00
none    0.0000E+00
Nuclide 012:
Y-90
 9
 0.2304000000E+06
 0.9000E+02
 3.24E+03
none    0.0000E+00
none    0.0000E+00
none    0.0000E+00
Nuclide 013:
Y-91
 9
 0.5055264000E+07
 0.9100E+02
 3.18E+04
none    0.0000E+00
none    0.0000E+00
none    0.0000E+00
Nuclide 014:
Y-92
 9
 0.1274400000E+05
 0.9200E+02
 3.40E+04
none    0.0000E+00
none    0.0000E+00
none    0.0000E+00
Nuclide 015:
Y-93
 9
 0.3636000000E+05
 0.9300E+02
 3.96E+04
Zr-93   0.1000E+01
none    0.0000E+00
none    0.0000E+00
```

Ref.

Nuclide 016:
Zr-95
9
0.5527872000E+07
0.9500E+02
4.46E+04
Nb-95m 0.7000E-02
Nb-95 0.9900E+00
none 0.0000E+00
Nuclide 017:
Zr-97
9
0.6084000000E+05
0.9700E+02
4.51E+04
Nb-97m 0.9500E+00
Nb-97 0.5300E-01
none 0.0000E+00
Nuclide 018:
Nb-95
9
0.3036960000E+07
0.9500E+02
4.48E+04
none 0.0000E+00
none 0.0000E+00
none 0.0000E+00
Nuclide 019:
Mo-99
7
0.2376000000E+06
0.9900E+02
5.13E+04
Tc-99m 0.8800E+00
Tc-99 0.1200E+00
none 0.0000E+00
Nuclide 020:
Tc-99m
7
0.2167200000E+05
0.9900E+02
4.49E+04
Tc-99 0.1000E+01
none 0.0000E+00
none 0.0000E+00
Nuclide 021:
Ru-103
7

ENGINEERING SERVICES	CALCULATION CONTINUATION SHEET	Page __D14__ (Next __D15 _)

Project: Nine Mile Point Nuclear Station Unit: __2_ Disposition: ____

Originator/Date	Reviewer/Date	Calculation No.	Revision
J. Metcalf 5/29/2007	Appendix E	H21C-103	0

Ref.

0.3393792000E+07
0.1030E+03
4.29E+04
Rh-103m 0.1000E+01
none 0.0000E+00
none 0.0000E+00
Nuclide 022:
Ru-105
7
0.1598400000E+05
0.1050E+03
3.01E+04
Rh-105 0.1000E+01
none 0.0000E+00
none 0.0000E+00
Nuclide 023:
Ru-106
7
0.3181248000E+08
0.1060E+03
1.76E+04
Rh-106 0.1000E+01
none 0.0000E+00
none 0.0000E+00
Nuclide 024:
Rh-105
7
0.1272960000E+06
0.1050E+03
2.84E+04
none 0.0000E+00
none 0.0000E+00
none 0.0000E+00
Nuclide 025:
Sb-127
4
0.3326400000E+06
0.1270E+03
3.01E+03
Te-127m 0.1800E+00
Te-127 0.8200E+00
none 0.0000E+00
Nuclide 026:
Sb-129
4
0.1555200000E+05
0.1290E+03
0.891E+04

ENGINEERING SERVICES	CALCULATION CONTINUATION SHEET	Page __D15__ (Next __D16 _)

Project: Nine Mile Point Nuclear Station Unit: __2_ Disposition: ____

Originator/Date	Reviewer/Date	Calculation No.	Revision
J. Metcalf 5/29/2007	Appendix E	H21C-103	0

Ref.

Te-129m 0.2200E+00
Te-129 0.7700E+00
none 0.0000E+00
Nuclide 027:
Te-127
4
0.3366000000E+05
0.1270E+03
3.00E+03
none 0.0000E+00
none 0.0000E+00
none 0.0000E+00
Nuclide 028:
Te-127m
4
0.9417600000E+07
0.1270E+03
4.05E+02
Te-127 0.9800E+00
none 0.0000E+00
none 0.0000E+00
Nuclide 029:
Te-129
4
0.4176000000E+04
0.1290E+03
8.76E+03
I-129 0.1000E+01
none 0.0000E+00
none 0.0000E+00
Nuclide 030:
Te-129m
4
0.2903040000E+07
0.1290E+03
1.30E+03
Te-129 0.6500E+00
I-129 0.3500E+00
none 0.0000E+00
Nuclide 031:
Te-131m
4
0.1080000000E+06
0.1310E+03
3.97E+03
Te-131 0.2200E+00
I-131 0.7800E+00
none 0.0000E+00

Ref.

Nuclide 032:
Te-132
4
0.2815200000E+06
0.1320E+03
3.85E+04
I-132 0.1000E+01
none 0.0000E+00
none 0.0000E+00
Nuclide 033:
I-131
2
0.6946560000E+06
0.1310E+03
2.71E+04
Xe-131m 0.1100E-01
none 0.0000E+00
none 0.0000E+00
Nuclide 034:
I-132
2
0.8280000000E+04
0.1320E+03
3.92E+04
none 0.0000E+00
none 0.0000E+00
none 0.0000E+00
Nuclide 035:
I-133
2
0.7488000000E+05
0.1330E+03
5.51E+04
Xe-133m 0.2900E-01
Xe-133 0.9700E+00
none 0.0000E+00
Nuclide 036:
I-134
2
0.3156000000E+04
0.1340E+03
6.03E+04
none 0.0000E+00
none 0.0000E+00
none 0.0000E+00
Nuclide 037:
I-135
2

ENGINEERING SERVICES	CALCULATION CONTINUATION SHEET	Page __D17__ (Next __D18 _)

Project: Nine Mile Point Nuclear Station Unit: __2_ Disposition: ____

Originator/Date	Reviewer/Date	Calculation No.	Revision
J. Metcalf 5/29/2007	Appendix E	H21C-103	0

Ref.

0.2379600000E+05
0.1350E+03
5.16E+04
Xe-135m 0.1500E+00
Xe-135 0.8500E+00
none 0.0000E+00
Nuclide 038:
Xe-133
1
0.4531680000E+06
0.1330E+03
5.27E+04
none 0.0000E+00
none 0.0000E+00
none 0.0000E+00
Nuclide 039:
Xe-133m
1
0.1926720000E+06
0.1330E+03
1.63E+03
Xe-133 0.1000E+01
none 0.0000E+00
none 0.0000E+00
Nuclide 040:
Xe-135
1
0.3272400000E+05
0.1350E+03
1.91E+04
Cs-135 0.1000E+01
none 0.0000E+00
none 0.0000E+00
Nuclide 041:
Xe-135m
1
0.91800000E+03
0.1350E+03
1.09E+04
Xe-135 0.9940E+00
Cs-135 0.6000E-03
none 0.0000E+00
Nuclide 042:
Xe-138
1
0.85200000E+03
0.1380E+03
4.50E+04

ENGINEERING SERVICES	CALCULATION CONTINUATION SHEET	Page __D18__ (Next __D19 _)

Project: Nine Mile Point Nuclear Station Unit: __2_ Disposition: ____

Originator/Date	Reviewer/Date	Calculation No.	Revision
J. Metcalf 5/29/2007	Appendix E	H21C-103	0

Ref.

```
none    0.0000E+00
none    0.0000E+00
none    0.0000E+00
Nuclide 043:
Cs-134
 3
 0.6507177120E+08
 0.1340E+03
 7.29E+03
none    0.0000E+00
none    0.0000E+00
none    0.0000E+00
Nuclide 044:
Cs-136
 3
 0.1131840000E+07
 0.1360E+03
 2.28E+03
none    0.0000E+00
none    0.0000E+00
none    0.0000E+00
Nuclide 045:
Cs-137
 3
 0.9467280000E+09
 0.1370E+03
 4.35E+03
Ba-137m 0.9500E+00
none    0.0000E+00
none    0.0000E+00
Nuclide 046:
Ba-139
 6
 0.4962000000E+04
 0.1390E+03
 4.89E+04
none    0.0000E+00
none    0.0000E+00
none    0.0000E+00
Nuclide 047:
Ba-140
 6
 0.1100736000E+07
 0.1400E+03
 4.71E+04
La-140  0.1000E+01
none    0.0000E+00
none    0.0000E+00
```

ENGINEERING SERVICES	CALCULATION CONTINUATION SHEET	Page __D19__ (Next __D20 _)

Project: Nine Mile Point Nuclear Station Unit: __2_ Disposition: ____

Originator/Date	Reviewer/Date	Calculation No.	Revision
J. Metcalf 5/29/2007	Appendix E	H21C-103	0

Ref.

```
Nuclide 048:
La-140
 9
 0.1449792000E+06
 0.1400E+03
 5.12E+04
none    0.0000E+00
none    0.0000E+00
none    0.0000E+00
Nuclide 049:
La-141
 9
 0.1414800000E+05
 0.1410E+03
 4.45E+04
Ce-141   0.1000E+01
none    0.0000E+00
none    0.0000E+00
Nuclide 050:
La-142
 9
 0.5550000000E+04
 0.1420E+03
 4.29E+04
none    0.0000E+00
none    0.0000E+00
none    0.0000E+00
Nuclide 051:
Ce-141
 8
 0.2808086400E+07
 0.1410E+03
 4.47E+04
none    0.0000E+00
none    0.0000E+00
none    0.0000E+00
Nuclide 052:
Ce-143
 8
 0.1188000000E+06
 0.1430E+03
 4.11E+04
Pr-143   0.1000E+01
none    0.0000E+00
none    0.0000E+00
Nuclide 053:
Ce-144
 8
```

Ref.

0.2456352000E+08
0.1440E+03
3.70E+04
Pr-144m 0.1800E-01
Pr-144 0.9800E+00
none 0.0000E+00
Nuclide 054:
Pr-143
9
0.1171584000E+07
0.1430E+03
3.97E+04
none 0.0000E+00
none 0.0000E+00
none 0.0000E+00
Nuclide 055:
Nd-147
9
0.9486720000E+06
0.1470E+03
1.80E+04
Pm-147 0.1000E+01
none 0.0000E+00
none 0.0000E+00
Nuclide 056:
Np-239
8
0.2034720000E+06
0.2390E+03
5.78E+05
Pu-239 0.1000E+01
none 0.0000E+00
none 0.0000E+00
Nuclide 057:
Pu-238
8
0.2768863824E+10
0.2380E+03
1.45E+02
U-234 0.1000E+01
none 0.0000E+00
none 0.0000E+00
Nuclide 058:
Pu-239
8
0.7594336440E+12
0.2390E+03
1.34E+01

ENGINEERING SERVICES	CALCULATION CONTINUATION SHEET	Page __D21__ (Next __D22 _)

Project: Nine Mile Point Nuclear Station Unit: __2_ Disposition: ____

Originator/Date	Reviewer/Date	Calculation No.	Revision
J. Metcalf 5/29/2007	Appendix E	H21C-103	0

Ref.

```
U-235   0.1000E+01
none    0.0000E+00
none    0.0000E+00
Nuclide 059:
Pu-240
 8
 0.2063867E+11
 0.240E+03
 1.89E+01
U-236   0.1000E+01
none    0.0000E+00
none    0.0000E+00
Nuclide 060:
Pu-241
 8
 0.473364E+09
 0.241E+03
 5.49E+03
Am-241  0.1000E+01
none    0.0000E+00
none    0.0000E+00
Nuclide 061:
Am-241
 9
 0.13664441E+11
 0.241E+03
 7.48E+00
Np-237  0.1000E+01
none    0.0000E+00
none    0.0000E+00
Nuclide 062:
Cm-242
 9
 0.14083200E+08
 0.242E+03
 1.85E+03
Pu-238  0.1000E+01
none    0.0000E+00
none    0.0000E+00
Nuclide 063:
Cm-244
 9
 0.56488104E+09
 0.244E+03
 1.23E+02
Pu-240  0.1000E+01
none    0.0000E+00
none    0.0000E+00
```

ENGINEERING SERVICES	CALCULATION CONTINUATION SHEET	Page __D22__ (Next __D23 _)

Project: Nine Mile Point Nuclear Station Unit: __2_ Disposition: ____

Originator/Date	Reviewer/Date	Calculation No.	Revision
J. Metcalf 5/29/2007	Appendix E	H21C-103	0

Ref.

End of Nuclear Inventory File

Ref.

Appendix D-2.2: Release Fraction File, nmp2-crda.rft

Release Fraction and Timing Name:
NMP2 - CRDA with fuel melting
Duration (h): Control Rod Drop Accident
0.0010D+00 0.0000D+00 0.0000D+00 0.0000D+00
Noble Gases:
1.7560E-03 0.0000E+00 0.0000E+00 0.0000E+00
Iodine:
1.6930E-03 0.0000E+00 0.0000E+00 0.0000E+00
Cesium:
1.9870E-03 0.0000E+00 0.0000E+00 0.0000E+00
Tellurium:
0.0000E+00 0.0000E+00 0.0000E+00 0.0000E+00
Strontium:
0.0000E+00 0.0000E+00 0.0000E+00 0.0000E+00
Barium:
0.0000E+00 0.0000E+00 0.0000E+00 0.0000E+00
Ruthenium:
0.0000E+00 0.0000E+00 0.0000E+00 0.0000E+00
Cerium:
0.0000E+00 0.0000E+00 0.0000E+00 0.0000E+00
Lanthanum:
0.0000E+00 0.0000E+00 0.0000E+00 0.0000E+00
Non-Radioactive Aerosols (kg):
0.0000E+00 0.0000E+00 0.0000E+00 0.0000E+00
End of Release File

Ref.

Appendix D-2.3: Dose Conversion Factor File, nmp2.inp

FGRDCF 10/24/95 03:24:50 beta-test version 1.10, minor FORTRAN fixes 5/4/95
Implicit daughter halflives (m) less than 90 and less than 0.100 of parent
9 ORGANS DEFINED IN THIS FILE:
GONADS
BREAST
LUNGS
RED MARR
BONE SUR
THYROID
REMAINDER
EFFECTIVE
SKIN(FGR)
63 NUCLIDES DEFINED IN THIS FILE:
Kr-83m
Kr-85m
Kr-85
Kr-87
Kr-88
Rb-86 D
Rb-88 D
Sr-89 Y
Sr-90 Y
Sr-91 Y Including:Y-91m
Sr-92 Y
Y-90 Y
Y-91 Y
Y-92 Y
Y-93 Y
Zr-95 D
Zr-97 Y Including:Nb-97m , Including:Nb-97
Nb-95 Y
Mo-99 Y
Tc-99m D
Ru-103 Y Including:Rh-103m
Ru-105 Y
Ru-106 Y Including:Rh-106
Rh-105 Y
Sb-127 W
Sb-129 W
Te-127 W
Te-127m W
Te-129 W
Te-129m W Including:Te-129
Te-131m W Including:Te-131
Te-132 W
I-131 D

Ref.

I-132 D
I-133 D
I-134 D
I-135 D Including:Xe-135m
Xe-133
Xe-133m
Xe-135
Xe-135m
Xe-138
Cs-134 D
Cs-136 D
Cs-137 D Including:Ba-137m
Ba-139 D
Ba-140 D
La-140 W
La-141 D
La-142 D
Ce-141 Y
Ce-143 Y
Ce-144 Y Including:Pr-144m, Including:Pr-144
Pr-143 Y
Nd-147 Y
Np-239 W
Pu-238 Y
Pu-239 Y
Pu-240
Pu-241
Am-241
Cm-242
Cm-244

	CLOUDSHINE	GROUND SHINE 8HR	GROUND SHINE 7DAY	GROUND SHINE RATE	INHALED ACUTE	INHALED CHRONIC	INGESTION
Kr-83m							
GONADS	1.710E-18	5.572E-15	5.855E-15	6.160E-19	-1.000E+00	0.000E+00	0.000E+00
BREAST	5.050E-18	9.498E-15	9.980E-15	1.050E-18	-1.000E+00	0.000E+00	0.000E+00
LUNGS	1.640E-19	1.266E-16	1.331E-16	1.400E-20	-1.000E+00	0.000E+00	0.000E+00
RED MARR	3.830E-19	5.617E-16	5.902E-16	6.210E-20	-1.000E+00	0.000E+00	0.000E+00
BONE SUR	2.250E-18	3.437E-15	3.612E-15	3.800E-19	-1.000E+00	0.000E+00	0.000E+00
THYROID	6.430E-19	7.698E-16	8.088E-16	8.510E-20	-1.000E+00	0.000E+00	0.000E+00
REMAINDER	5.300E-19	1.393E-15	1.464E-15	1.540E-19	-1.000E+00	0.000E+00	0.000E+00
EFFECTIVE	1.500E-18	3.437E-15	3.612E-15	3.800E-19	-1.000E+00	0.000E+00	0.000E+00
SKIN(FGR)	3.560E-17	1.167E-13	1.226E-13	1.290E-17	-1.000E+00	0.000E+00	0.000E+00
Kr-85m							
GONADS	7.310E-15	2.594E-12	3.653E-12	1.570E-16	-1.000E+00	0.000E+00	0.000E+00
BREAST	8.410E-15	2.527E-12	3.560E-12	1.530E-16	-1.000E+00	0.000E+00	0.000E+00
LUNGS	7.040E-15	2.379E-12	3.351E-12	1.440E-16	-1.000E+00	0.000E+00	0.000E+00
RED MARR	6.430E-15	2.346E-12	3.304E-12	1.420E-16	-1.000E+00	0.000E+00	0.000E+00
BONE SUR	1.880E-14	5.286E-12	7.446E-12	3.200E-16	-1.000E+00	0.000E+00	0.000E+00

Ref.

THYROID 7.330E-15 2.395E-12 3.374E-12 1.450E-16-1.000E+00 0.000E+00 0.000E+00
REMAINDER 6.640E-15 2.313E-12 3.257E-12 1.400E-16-1.000E+00 0.000E+00 0.000E+00
EFFECTIVE 7.480E-15 2.511E-12 3.537E-12 1.520E-16-1.000E+00 0.000E+00 0.000E+00
SKIN(FGR) 2.240E-14 2.247E-11 3.164E-11 1.360E-15-1.000E+00 0.000E+00 0.000E+00
Kr-85
GONADS 1.170E-16 8.121E-14 1.704E-12 2.820E-18-1.000E+00 0.000E+00 0.000E+00
BREAST 1.340E-16 7.891E-14 1.656E-12 2.740E-18-1.000E+00 0.000E+00 0.000E+00
LUNGS 1.140E-16 7.056E-14 1.481E-12 2.450E-18-1.000E+00 0.000E+00 0.000E+00
RED MARR 1.090E-16 6.998E-14 1.469E-12 2.430E-18-1.000E+00 0.000E+00 0.000E+00
BONE SUR 2.200E-16 1.287E-13 2.702E-12 4.470E-18-1.000E+00 0.000E+00 0.000E+00
THYROID 1.180E-16 7.459E-14 1.565E-12 2.590E-18-1.000E+00 0.000E+00 0.000E+00
REMAINDER 1.090E-16 6.941E-14 1.457E-12 2.410E-18-1.000E+00 0.000E+00 0.000E+00
EFFECTIVE 1.190E-16 7.603E-14 1.596E-12 2.640E-18-1.000E+00 0.000E+00 0.000E+00
SKIN(FGR) 1.320E-14 2.304E-11 4.835E-10 8.000E-16-1.000E+00 0.000E+00 0.000E+00
Kr-87
GONADS 4.000E-14 4.962E-12 5.026E-12 7.610E-16-1.000E+00 0.000E+00 0.000E+00
BREAST 4.500E-14 4.740E-12 4.802E-12 7.270E-16-1.000E+00 0.000E+00 0.000E+00
LUNGS 4.040E-14 4.603E-12 4.663E-12 7.060E-16-1.000E+00 0.000E+00 0.000E+00
RED MARR 4.000E-14 4.708E-12 4.769E-12 7.220E-16-1.000E+00 0.000E+00 0.000E+00
BONE SUR 6.020E-14 6.514E-12 6.598E-12 9.990E-16-1.000E+00 0.000E+00 0.000E+00
THYROID 4.130E-14 4.473E-12 4.531E-12 6.860E-16-1.000E+00 0.000E+00 0.000E+00
REMAINDER 3.910E-14 4.590E-12 4.650E-12 7.040E-16-1.000E+00 0.000E+00 0.000E+00
EFFECTIVE 4.120E-14 4.773E-12 4.835E-12 7.320E-16-1.000E+00 0.000E+00 0.000E+00
SKIN(FGR) 1.370E-13 8.802E-11 8.916E-11 1.350E-14-1.000E+00 0.000E+00 0.000E+00
Kr-88
GONADS 9.900E-14 2.278E-11 2.655E-11 1.800E-15-1.000E+00 0.000E+00 0.000E+00
BREAST 1.110E-13 2.177E-11 2.537E-11 1.720E-15-1.000E+00 0.000E+00 0.000E+00
LUNGS 1.010E-13 2.139E-11 2.493E-11 1.690E-15-1.000E+00 0.000E+00 0.000E+00
RED MARR 1.000E-13 2.190E-11 2.552E-11 1.730E-15-1.000E+00 0.000E+00 0.000E+00
BONE SUR 1.390E-13 2.886E-11 3.363E-11 2.280E-15-1.000E+00 0.000E+00 0.000E+00
THYROID 1.030E-13 2.012E-11 2.345E-11 1.590E-15-1.000E+00 0.000E+00 0.000E+00
REMAINDER 9.790E-14 2.139E-11 2.493E-11 1.690E-15-1.000E+00 0.000E+00 0.000E+00
EFFECTIVE 1.020E-13 2.202E-11 2.567E-11 1.740E-15-1.000E+00 0.000E+00 0.000E+00
SKIN(FGR) 1.350E-13 5.607E-11 6.534E-11 4.430E-15-1.000E+00 0.000E+00 0.000E+00
Rb-86
GONADS 4.710E-15 2.788E-12 5.187E-11 9.740E-17-1.000E+00 1.340E-09 2.150E-09
BREAST 5.340E-15 2.662E-12 4.953E-11 9.300E-17-1.000E+00 1.330E-09 2.140E-09
LUNGS 4.710E-15 2.553E-12 4.750E-11 8.920E-17-1.000E+00 3.300E-09 2.140E-09
RED MARR 4.640E-15 2.619E-12 4.873E-11 9.150E-17-1.000E+00 2.320E-09 3.720E-09
BONE SUR 7.050E-15 3.635E-12 6.764E-11 1.270E-16-1.000E+00 4.270E-09 6.860E-09
THYROID 4.840E-15 2.599E-12 4.836E-11 9.080E-17-1.000E+00 1.330E-09 2.140E-09
REMAINDER 4.520E-15 2.542E-12 4.729E-11 8.880E-17-1.000E+00 1.380E-09 2.330E-09
EFFECTIVE 4.810E-15 2.665E-12 4.958E-11 9.310E-17-1.000E+00 1.790E-09 2.530E-09
SKIN(FGR) 4.850E-14 2.210E-10 4.111E-09 7.720E-15-1.000E+00 0.000E+00 0.000E+00
Rb-88
GONADS 3.260E-14 2.788E-12 5.187E-11 9.740E-17-1.000E+00 1.310E-12 2.150E-09
BREAST 3.670E-14 2.662E-12 4.953E-11 9.300E-17-1.000E+00 1.430E-12 2.140E-09
LUNGS 3.310E-14 2.553E-12 4.750E-11 8.920E-17-1.000E+00 1.470E-10 2.140E-09

Ref.

RED MARR 3.300E-14 2.619E-12 4.873E-11 9.150E-17-1.000E+00 1.450E-12 3.720E-09
BONE SUR 4.620E-14 3.635E-12 6.764E-11 1.270E-16-1.000E+00 1.470E-12 6.860E-09
THYROID 3.370E-14 2.599E-12 4.836E-11 9.080E-17-1.000E+00 1.370E-12 2.140E-09
REMAINDER 3.210E-14 2.542E-12 4.729E-11 8.880E-17-1.000E+00 1.380E-11 2.330E-09
EFFECTIVE 3.360E-14 2.665E-12 4.958E-11 9.310E-17-1.000E+00 2.260E-11 2.530E-09
SKIN(FGR) 1.830E-13 2.210E-10 4.111E-09 7.720E-15-1.000E+00 0.000E+00 0.000E+00
Sr-89
GONADS 7.730E-17 7.155E-14 1.436E-12 2.490E-18-1.000E+00 7.950E-12 8.050E-12
BREAST 9.080E-17 7.212E-14 1.447E-12 2.510E-18-1.000E+00 7.960E-12 7.980E-12
LUNGS 7.080E-17 5.689E-14 1.142E-12 1.980E-18-1.000E+00 8.350E-08 7.970E-12
RED MARR 6.390E-17 5.345E-14 1.073E-12 1.860E-18-1.000E+00 1.070E-10 1.080E-10
BONE SUR 1.940E-16 1.560E-13 3.131E-12 5.430E-18-1.000E+00 1.590E-10 1.610E-10
THYROID 7.600E-17 6.063E-14 1.217E-12 2.110E-18-1.000E+00 7.960E-12 7.970E-12
REMAINDER 6.710E-17 5.603E-14 1.124E-12 1.950E-18-1.000E+00 3.970E-09 8.250E-09
EFFECTIVE 7.730E-17 6.523E-14 1.309E-12 2.270E-18-1.000E+00 1.760E-09 2.500E-09
SKIN(FGR) 3.690E-14 1.914E-10 3.841E-09 6.660E-15-1.000E+00 0.000E+00 0.000E+00
Sr-90
GONADS 7.780E-18 9.590E-15 2.014E-13 3.330E-19-1.000E+00 2.690E-10 5.040E-11
BREAST 9.490E-18 1.008E-14 2.116E-13 3.500E-19-1.000E+00 2.690E-10 5.040E-11
LUNGS 6.440E-18 6.307E-15 1.324E-13 2.190E-19-1.000E+00 2.860E-06 5.040E-11
RED MARR 5.440E-18 5.558E-15 1.167E-13 1.930E-19-1.000E+00 3.280E-08 6.450E-09
BONE SUR 2.280E-17 2.393E-14 5.025E-13 8.310E-19-1.000E+00 7.090E-08 1.390E-08
THYROID 7.330E-18 7.171E-15 1.506E-13 2.490E-19-1.000E+00 2.690E-10 5.040E-11
REMAINDER 6.110E-18 6.422E-15 1.348E-13 2.230E-19-1.000E+00 5.730E-09 6.700E-09
EFFECTIVE 7.530E-18 8.179E-15 1.717E-13 2.840E-19-1.000E+00 6.470E-08 3.230E-09
SKIN(FGR) 9.200E-15 4.032E-12 8.465E-11 1.400E-16-1.000E+00 0.000E+00 0.000E+00
Sr-91
GONADS 3.380E-14 2.155E-11 5.062E-11 1.026E-15-1.000E+00 5.650E-11 2.520E-10
BREAST 3.830E-14 2.059E-11 4.838E-11 9.806E-16-1.000E+00 1.740E-11 3.676E-11
LUNGS 3.370E-14 1.970E-11 4.626E-11 9.376E-16-1.000E+00 2.130E-09 1.055E-11
RED MARR 3.310E-14 2.011E-11 4.722E-11 9.570E-16-1.000E+00 2.230E-11 5.659E-11
BONE SUR 5.200E-14 2.852E-11 6.709E-11 1.360E-15-1.000E+00 1.270E-11 2.070E-11
THYROID 3.470E-14 2.035E-11 4.782E-11 9.693E-16-1.000E+00 9.640E-12 1.968E-12
REMAINDER 3.240E-14 1.948E-11 4.573E-11 9.268E-16-1.000E+00 5.780E-10 2.557E-09
EFFECTIVE 4.929E-14 2.057E-11 4.832E-11 9.793E-16-1.000E+00 2.577E-10 8.455E-10
SKIN(FGR) 8.140E-14 1.748E-10 3.987E-10 8.080E-15-1.000E+00 0.000E+00 0.000E+00
Sr-92
GONADS 6.610E-14 1.593E-11 1.830E-11 1.300E-15-1.000E+00 1.020E-11 8.180E-11
BREAST 7.480E-14 1.520E-11 1.745E-11 1.240E-15-1.000E+00 6.490E-12 1.700E-11
LUNGS 6.670E-14 1.483E-11 1.703E-11 1.210E-15-1.000E+00 1.050E-09 7.220E-12
RED MARR 6.620E-14 1.520E-11 1.745E-11 1.240E-15-1.000E+00 6.980E-12 2.290E-11
BONE SUR 9.490E-14 2.010E-11 2.308E-11 1.640E-15-1.000E+00 4.360E-12 8.490E-12
THYROID 6.820E-14 1.446E-11 1.661E-11 1.180E-15-1.000E+00 3.920E-12 1.300E-12
REMAINDER 6.450E-14 1.471E-11 1.689E-11 1.200E-15-1.000E+00 2.900E-10 1.720E-09
EFFECTIVE 6.790E-14 1.532E-11 1.759E-11 1.250E-15-1.000E+00 1.700E-10 5.430E-10
SKIN(FGR) 8.560E-14 2.280E-11 2.618E-11 1.860E-15-1.000E+00 0.000E+00 0.000E+00
Y-90
GONADS 1.890E-16 1.586E-13 1.601E-12 5.750E-18-1.000E+00 5.170E-13 1.430E-14

Ref.

BREAST 2.200E-16 1.578E-13 1.593E-12 5.720E-18-1.000E+00 5.170E-13 1.270E-14
LUNGS 1.770E-16 1.313E-13 1.326E-12 4.760E-18-1.000E+00 9.310E-09 1.260E-14
RED MARR 1.620E-16 1.261E-13 1.273E-12 4.570E-18-1.000E+00 1.520E-11 3.700E-13
BONE SUR 4.440E-16 3.228E-13 3.259E-12 1.170E-17-1.000E+00 1.510E-11 3.670E-13
THYROID 1.870E-16 1.385E-13 1.398E-12 5.020E-18-1.000E+00 5.170E-13 1.260E-14
REMAINDER 1.680E-16 1.291E-13 1.303E-12 4.680E-18-1.000E+00 3.870E-09 9.680E-09
EFFECTIVE 1.900E-16 1.468E-13 1.482E-12 5.320E-18-1.000E+00 2.280E-09 2.910E-09
SKIN(FGR) 6.240E-14 2.897E-10 2.924E-09 1.050E-14-1.000E+00 0.000E+00 0.000E+00
Y-91
GONADS 2.560E-16 1.756E-13 3.546E-12 6.110E-18-1.000E+00 8.200E-12 3.540E-12
BREAST 2.930E-16 1.713E-13 3.459E-12 5.960E-18-1.000E+00 8.920E-12 5.540E-13
LUNGS 2.500E-16 1.526E-13 3.082E-12 5.310E-18-1.000E+00 9.870E-08 2.020E-13
RED MARR 2.410E-16 1.521E-13 3.070E-12 5.290E-18-1.000E+00 3.190E-10 6.590E-12
BONE SUR 4.560E-16 2.903E-13 5.862E-12 1.010E-17-1.000E+00 3.180E-10 6.130E-12
THYROID 2.600E-16 1.564E-13 3.157E-12 5.440E-18-1.000E+00 8.500E-12 1.290E-13
REMAINDER 2.390E-16 1.509E-13 3.047E-12 5.250E-18-1.000E+00 4.200E-09 8.570E-09
EFFECTIVE 2.600E-16 1.650E-13 3.332E-12 5.740E-18-1.000E+00 1.320E-08 2.570E-09
SKIN(FGR) 3.850E-14 1.989E-10 4.016E-09 6.920E-15-1.000E+00 0.000E+00 0.000E+00
Y-92
GONADS 1.270E-14 3.855E-12 4.872E-12 2.650E-16-1.000E+00 2.610E-12 1.960E-11
BREAST 1.440E-14 3.680E-12 4.652E-12 2.530E-16-1.000E+00 1.500E-12 3.550E-12
LUNGS 1.270E-14 3.535E-12 4.468E-12 2.430E-16-1.000E+00 1.240E-09 1.390E-12
RED MARR 1.250E-14 3.608E-12 4.560E-12 2.480E-16-1.000E+00 2.070E-12 4.910E-12
BONE SUR 1.950E-14 5.091E-12 6.435E-12 3.500E-16-1.000E+00 1.510E-12 1.750E-12
THYROID 1.300E-14 3.579E-12 4.523E-12 2.460E-16-1.000E+00 1.050E-12 1.770E-13
REMAINDER 1.220E-14 3.506E-12 4.431E-12 2.410E-16-1.000E+00 2.030E-10 1.700E-09
EFFECTIVE 1.300E-14 3.680E-12 4.652E-12 2.530E-16-1.000E+00 2.110E-10 5.150E-10
SKIN(FGR) 1.140E-13 2.022E-10 2.556E-10 1.390E-14-1.000E+00 0.000E+00 0.000E+00
Y-93
GONADS 4.670E-15 2.108E-12 4.989E-12 9.510E-17-1.000E+00 5.310E-12 2.200E-11
BREAST 5.300E-15 2.026E-12 4.794E-12 9.140E-17-1.000E+00 1.740E-12 3.130E-12
LUNGS 4.680E-15 1.937E-12 4.585E-12 8.740E-17-1.000E+00 2.520E-09 8.670E-13
RED MARR 4.580E-15 1.972E-12 4.669E-12 8.900E-17-1.000E+00 4.040E-12 4.930E-12
BONE SUR 7.580E-15 2.948E-12 6.977E-12 1.330E-16-1.000E+00 3.140E-12 1.730E-12
THYROID 4.790E-15 1.908E-12 4.516E-12 8.610E-17-1.000E+00 9.260E-13 1.260E-13
REMAINDER 4.510E-15 1.919E-12 4.543E-12 8.660E-17-1.000E+00 9.250E-10 4.090E-09
EFFECTIVE 4.800E-15 2.021E-12 4.784E-12 9.120E-17-1.000E+00 5.820E-10 1.230E-09
SKIN(FGR) 8.500E-14 2.726E-10 6.452E-10 1.230E-14-1.000E+00 0.000E+00 0.000E+00
Zr-95
GONADS 3.530E-14 2.182E-11 4.421E-10 7.590E-16-1.000E+00 1.880E-09 8.160E-10
BREAST 4.010E-14 2.084E-11 4.223E-10 7.250E-16-1.000E+00 1.910E-09 1.050E-10
LUNGS 3.510E-14 1.989E-11 4.030E-10 6.920E-16-1.000E+00 2.170E-09 2.340E-11
RED MARR 3.430E-14 2.030E-11 4.112E-10 7.060E-16-1.000E+00 1.300E-08 2.140E-10
BONE SUR 5.620E-14 2.875E-11 5.824E-10 1.000E-15-1.000E+00 1.030E-07 4.860E-10
THYROID 3.610E-14 2.076E-11 4.205E-10 7.220E-16-1.000E+00 1.440E-09 8.270E-12
REMAINDER 3.360E-14 1.963E-11 3.978E-10 6.830E-16-1.000E+00 2.280E-09 2.530E-09
EFFECTIVE 3.600E-14 2.078E-11 4.211E-10 7.230E-16-1.000E+00 6.390E-09 1.020E-09
SKIN(FGR) 4.500E-14 2.561E-11 5.190E-10 8.910E-16-1.000E+00 0.000E+00 0.000E+00

ENGINEERING SERVICES	CALCULATION CONTINUATION SHEET	Page __D29__ (Next __D30 _)

Project: Nine Mile Point Nuclear Station Unit: __2_ Disposition: ____

Originator/Date	Reviewer/Date	Calculation No.	Revision
J. Metcalf 5/29/2007	Appendix E	H21C-103	0

Ref.

Zr-97
GONADS 8.800E-15 2.179E-11 7.799E-11 9.253E-16-1.000E+00 1.840E-10 6.228E-10
BREAST 9.990E-15 2.083E-11 7.455E-11 8.846E-16-1.000E+00 4.700E-11 8.137E-11
LUNGS 8.810E-15 1.992E-11 7.127E-11 8.456E-16-1.000E+00 4.110E-09 1.770E-11
RED MARR 8.640E-15 2.034E-11 7.279E-11 8.634E-16-1.000E+00 6.370E-11 1.302E-10
BONE SUR 1.380E-14 2.881E-11 1.031E-10 1.224E-15-1.000E+00 3.500E-11 4.558E-11
THYROID 9.030E-15 2.061E-11 7.377E-11 8.755E-16-1.000E+00 2.310E-11 2.671E-12
REMAINDER 8.480E-15 1.966E-11 7.035E-11 8.345E-16-1.000E+00 2.040E-09 6.990E-09
EFFECTIVE 4.432E-14 2.078E-11 7.438E-11 8.824E-16-1.000E+00 1.171E-09 2.283E-09
SKIN(FGR) 5.550E-14 2.281E-10 8.148E-10 9.587E-15-1.000E+00 0.000E+00 0.000E+00
Nb-95
GONADS 3.660E-14 2.253E-11 4.435E-10 7.850E-16-1.000E+00 4.320E-10 8.050E-10
BREAST 4.160E-14 2.150E-11 4.231E-10 7.490E-16-1.000E+00 4.070E-10 1.070E-10
LUNGS 3.650E-14 2.055E-11 4.045E-10 7.160E-16-1.000E+00 8.320E-09 2.740E-11
RED MARR 3.560E-14 2.101E-11 4.135E-10 7.320E-16-1.000E+00 4.420E-10 1.990E-10
BONE SUR 5.790E-14 2.957E-11 5.819E-10 1.030E-15-1.000E+00 5.130E-10 2.940E-10
THYROID 3.750E-14 2.144E-11 4.220E-10 7.470E-16-1.000E+00 3.580E-10 1.180E-11
REMAINDER 3.490E-14 2.032E-11 4.000E-10 7.080E-16-1.000E+00 1.070E-09 1.470E-09
EFFECTIVE 3.740E-14 2.147E-11 4.226E-10 7.480E-16-1.000E+00 1.570E-09 6.950E-10
SKIN(FGR) 4.300E-14 2.598E-11 5.112E-10 9.050E-16-1.000E+00 0.000E+00 0.000E+00
Mo-99
GONADS 7.130E-15 4.282E-12 4.403E-11 1.550E-16-1.000E+00 9.510E-11 2.180E-10
BREAST 8.130E-15 4.116E-12 4.233E-11 1.490E-16-1.000E+00 2.750E-11 3.430E-11
LUNGS 7.060E-15 3.867E-12 3.977E-11 1.400E-16-1.000E+00 4.290E-09 1.510E-11
RED MARR 6.820E-15 3.923E-12 4.034E-11 1.420E-16-1.000E+00 5.240E-11 8.320E-11
BONE SUR 1.240E-14 6.105E-12 6.278E-11 2.210E-16-1.000E+00 4.130E-11 6.320E-11
THYROID 7.270E-15 4.033E-12 4.147E-11 1.460E-16-1.000E+00 1.520E-11 1.030E-11
REMAINDER 6.740E-15 3.812E-12 3.920E-11 1.380E-16-1.000E+00 1.740E-09 4.280E-09
EFFECTIVE 7.280E-15 4.061E-12 4.176E-11 1.470E-16-1.000E+00 1.070E-09 1.360E-09
SKIN(FGR) 3.140E-14 1.039E-10 1.068E-09 3.760E-15-1.000E+00 0.000E+00 0.000E+00
Tc-99m
GONADS 5.750E-15 2.334E-12 3.877E-12 1.240E-16-1.000E+00 2.770E-12 9.750E-12
BREAST 6.650E-15 2.258E-12 3.752E-12 1.200E-16-1.000E+00 2.150E-12 3.570E-12
LUNGS 5.490E-15 2.127E-12 3.533E-12 1.130E-16-1.000E+00 2.280E-11 3.140E-12
RED MARR 4.910E-15 2.070E-12 3.439E-12 1.100E-16-1.000E+00 3.360E-12 6.290E-12
BONE SUR 1.630E-14 5.383E-12 8.942E-12 2.860E-16-1.000E+00 2.620E-12 4.060E-12
THYROID 5.750E-15 2.145E-12 3.564E-12 1.140E-16-1.000E+00 5.010E-11 8.460E-11
REMAINDER 5.150E-15 2.070E-12 3.439E-12 1.100E-16-1.000E+00 1.020E-11 3.340E-11
EFFECTIVE 5.890E-15 2.277E-12 3.783E-12 1.210E-16-1.000E+00 8.800E-12 1.680E-11
SKIN(FGR) 7.140E-15 2.710E-12 4.502E-12 1.440E-16-1.000E+00 0.000E+00 0.000E+00
Ru-103
GONADS 2.191E-14 1.404E-11 2.783E-10 4.892E-16-1.000E+00 3.070E-10 5.720E-10
BREAST 2.512E-14 1.350E-11 2.677E-10 4.705E-16-1.000E+00 3.110E-10 1.200E-10
LUNGS 2.180E-14 1.273E-11 2.522E-10 4.432E-16-1.000E+00 1.561E-08 7.310E-11
RED MARR 2.100E-14 1.287E-11 2.551E-10 4.483E-16-1.000E+00 3.190E-10 1.660E-10
BONE SUR 3.892E-14 1.958E-11 3.882E-10 6.823E-16-1.000E+00 2.370E-10 9.631E-11
THYROID 2.241E-14 1.331E-11 2.639E-10 4.638E-16-1.000E+00 2.570E-10 6.250E-11
REMAINDER 2.080E-14 1.248E-11 2.472E-10 4.346E-16-1.000E+00 1.250E-09 2.110E-09

Ref.

EFFECTIVE 2.251E-14 1.332E-11 2.641E-10 4.642E-16-1.000E+00 2.421E-09 8.271E-10
SKIN(FGR) 2.774E-14 1.785E-11 3.543E-10 6.229E-16-1.000E+00 0.000E+00 0.000E+00
Ru-105
GONADS 3.720E-14 1.327E-11 1.861E-11 8.070E-16-1.000E+00 1.590E-11 9.670E-11
BREAST 4.240E-14 1.271E-11 1.783E-11 7.730E-16-1.000E+00 6.610E-12 1.590E-11
LUNGS 3.700E-14 1.210E-11 1.697E-11 7.360E-16-1.000E+00 5.730E-10 6.210E-12
RED MARR 3.590E-14 1.230E-11 1.725E-11 7.480E-16-1.000E+00 7.700E-12 2.350E-11
BONE SUR 6.280E-14 1.809E-11 2.537E-11 1.100E-15-1.000E+00 4.620E-12 8.890E-12
THYROID 3.800E-14 1.260E-11 1.766E-11 7.660E-16-1.000E+00 4.150E-12 1.820E-12
REMAINDER 3.540E-14 1.189E-11 1.667E-11 7.230E-16-1.000E+00 1.610E-10 8.540E-10
EFFECTIVE 3.810E-14 1.265E-11 1.773E-11 7.690E-16-1.000E+00 1.230E-10 2.870E-10
SKIN(FGR) 6.730E-14 7.368E-11 1.033E-10 4.480E-15-1.000E+00 0.000E+00 0.000E+00
Ru-106
GONADS 1.010E-14 6.411E-12 1.340E-10 2.230E-16-1.000E+00 1.300E-09 1.640E-09
BREAST 1.160E-14 6.152E-12 1.286E-10 2.140E-16-1.000E+00 1.780E-09 1.440E-09
LUNGS 1.010E-14 5.836E-12 1.220E-10 2.030E-16-1.000E+00 1.040E-06 1.420E-09
RED MARR 9.750E-15 5.893E-12 1.232E-10 2.050E-16-1.000E+00 1.760E-09 1.460E-09
BONE SUR 1.720E-14 8.883E-12 1.856E-10 3.090E-16-1.000E+00 1.610E-09 1.430E-09
THYROID 1.030E-14 6.066E-12 1.268E-10 2.110E-16-1.000E+00 1.720E-09 1.410E-09
REMAINDER 9.630E-15 5.721E-12 1.196E-10 1.990E-16-1.000E+00 1.200E-08 2.110E-08
EFFECTIVE 1.040E-14 6.095E-12 1.274E-10 2.120E-16-1.000E+00 1.290E-07 7.400E-09
SKIN(FGR) 1.090E-13 4.082E-10 8.531E-09 1.420E-14-1.000E+00 0.000E+00 0.000E+00
Rh-105
GONADS 3.640E-15 2.127E-12 1.411E-11 7.980E-17-1.000E+00 2.110E-11 5.800E-11
BREAST 4.160E-15 2.063E-12 1.369E-11 7.740E-17-1.000E+00 5.610E-12 8.970E-12
LUNGS 3.570E-15 1.935E-12 1.284E-11 7.260E-17-1.000E+00 9.580E-10 3.860E-12
RED MARR 3.380E-15 1.946E-12 1.291E-11 7.300E-17-1.000E+00 7.770E-12 1.470E-11
BONE SUR 7.530E-15 3.332E-12 2.210E-11 1.250E-16-1.000E+00 4.460E-12 6.750E-12
THYROID 3.680E-15 1.983E-12 1.316E-11 7.440E-17-1.000E+00 2.880E-12 2.910E-12
REMAINDER 3.390E-15 1.885E-12 1.250E-11 7.070E-17-1.000E+00 4.530E-10 1.270E-09
EFFECTIVE 3.720E-15 2.031E-12 1.347E-11 7.620E-17-1.000E+00 2.580E-10 3.990E-10
SKIN(FGR) 1.070E-14 4.691E-12 3.112E-11 1.760E-16-1.000E+00 0.000E+00 0.000E+00
Sb-127
GONADS 3.260E-14 1.985E-11 2.441E-10 7.100E-16-1.000E+00 2.520E-10 6.140E-10
BREAST 3.720E-14 1.904E-11 2.341E-10 6.810E-16-1.000E+00 9.120E-11 7.600E-11
LUNGS 3.240E-14 1.809E-11 2.224E-10 6.470E-16-1.000E+00 6.940E-09 1.570E-11
RED MARR 3.140E-14 1.834E-11 2.255E-10 6.560E-16-1.000E+00 1.610E-10 1.330E-10
BONE SUR 5.520E-14 2.720E-11 3.345E-10 9.730E-16-1.000E+00 1.340E-10 5.240E-11
THYROID 3.330E-14 1.884E-11 2.317E-10 6.740E-16-1.000E+00 6.150E-11 4.640E-12
REMAINDER 3.090E-14 1.775E-11 2.183E-10 6.350E-16-1.000E+00 2.330E-09 5.870E-09
EFFECTIVE 3.330E-14 1.890E-11 2.324E-10 6.760E-16-1.000E+00 1.630E-09 1.950E-09
SKIN(FGR) 5.580E-14 7.967E-11 9.799E-10 2.850E-15-1.000E+00 0.000E+00 0.000E+00
Sb-129
GONADS 6.970E-14 2.336E-11 3.231E-11 1.440E-15-1.000E+00 2.150E-11 1.510E-10
BREAST 7.910E-14 2.222E-11 3.074E-11 1.370E-15-1.000E+00 1.280E-11 2.560E-11
LUNGS 6.980E-14 2.141E-11 2.962E-11 1.320E-15-1.000E+00 8.980E-10 9.390E-12
RED MARR 6.860E-14 2.190E-11 3.029E-11 1.350E-15-1.000E+00 1.700E-11 3.670E-11
BONE SUR 1.070E-13 3.033E-11 4.196E-11 1.870E-15-1.000E+00 1.460E-11 1.340E-11

Ref.

THYROID 7.160E-14 2.174E-11 3.007E-11 1.340E-15-1.000E+00 9.720E-12 1.470E-12
REMAINDER 6.710E-14 2.125E-11 2.939E-11 1.310E-15-1.000E+00 1.870E-10 1.450E-09
EFFECTIVE 7.140E-14 2.238E-11 3.096E-11 1.380E-15-1.000E+00 1.740E-10 4.840E-10
SKIN(FGR) 1.050E-13 8.273E-11 1.144E-10 5.100E-15-1.000E+00 0.000E+00 0.000E+00
Te-127
GONADS 2.370E-16 1.191E-13 2.661E-13 5.480E-18-1.000E+00 2.020E-12 4.020E-12
BREAST 2.730E-16 1.158E-13 2.588E-13 5.330E-18-1.000E+00 1.880E-12 3.000E-12
LUNGS 2.320E-16 1.060E-13 2.370E-13 4.880E-18-1.000E+00 4.270E-10 2.890E-12
RED MARR 2.210E-16 1.058E-13 2.365E-13 4.870E-18-1.000E+00 4.090E-12 6.570E-12
BONE SUR 4.650E-16 1.862E-13 4.162E-13 8.570E-18-1.000E+00 4.090E-12 6.460E-12
THYROID 2.400E-16 1.106E-13 2.472E-13 5.090E-18-1.000E+00 1.840E-12 2.860E-12
REMAINDER 2.210E-16 1.036E-13 2.316E-13 4.770E-18-1.000E+00 1.110E-10 6.130E-10
EFFECTIVE 2.420E-16 1.125E-13 2.515E-13 5.180E-18-1.000E+00 8.600E-11 1.870E-10
SKIN(FGR) 1.140E-14 1.173E-11 2.622E-11 5.400E-16-1.000E+00 0.000E+00 0.000E+00
Te-127m
GONADS 1.900E-16 4.689E-13 9.642E-12 1.630E-17-1.000E+00 1.100E-10 1.250E-10
BREAST 2.690E-16 5.150E-13 1.059E-11 1.790E-17-1.000E+00 1.100E-10 9.740E-11
LUNGS 7.620E-17 1.602E-13 3.295E-12 5.570E-18-1.000E+00 3.340E-08 9.620E-11
RED MARR 6.430E-17 1.249E-13 2.567E-12 4.340E-18-1.000E+00 5.360E-09 5.430E-09
BONE SUR 3.940E-16 9.005E-13 1.852E-11 3.130E-17-1.000E+00 2.040E-08 2.070E-08
THYROID 1.500E-16 2.779E-13 5.714E-12 9.660E-18-1.000E+00 9.660E-11 9.430E-11
REMAINDER 8.640E-17 1.999E-13 4.111E-12 6.950E-18-1.000E+00 1.660E-09 2.980E-09
EFFECTIVE 1.470E-16 3.251E-13 6.684E-12 1.130E-17-1.000E+00 5.810E-09 2.230E-09
SKIN(FGR) 8.490E-16 1.496E-12 3.076E-11 5.200E-17-1.000E+00 0.000E+00 0.000E+00
Te-129
GONADS 2.710E-15 3.889E-13 3.922E-13 6.510E-17-1.000E+00 5.050E-13 1.590E-12
BREAST 3.120E-15 3.800E-13 3.832E-13 6.360E-17-1.000E+00 5.390E-13 6.050E-13
LUNGS 2.640E-15 3.298E-13 3.326E-13 5.520E-17-1.000E+00 1.530E-10 4.910E-13
RED MARR 2.540E-15 3.298E-13 3.326E-13 5.520E-17-1.000E+00 6.190E-13 7.640E-13
BONE SUR 4.880E-15 5.753E-13 5.802E-13 9.630E-17-1.000E+00 6.220E-13 5.400E-13
THYROID 2.740E-15 3.525E-13 3.555E-13 5.900E-17-1.000E+00 5.090E-13 3.360E-13
REMAINDER 2.520E-15 3.262E-13 3.289E-13 5.460E-17-1.000E+00 7.280E-12 1.790E-10
EFFECTIVE 2.750E-15 3.590E-13 3.621E-13 6.010E-17-1.000E+00 2.090E-11 5.450E-11
SKIN(FGR) 3.570E-14 3.429E-11 3.458E-11 5.740E-15-1.000E+00 0.000E+00 0.000E+00
Te-129m
GONADS 1.560E-15 2.206E-12 4.799E-11 8.561E-17-1.000E+00 1.780E-10 2.420E-10
BREAST 1.810E-15 2.181E-12 4.739E-11 8.454E-17-1.000E+00 1.690E-10 1.664E-10
LUNGS 1.460E-15 1.741E-12 3.815E-11 6.808E-17-1.000E+00 4.030E-08 1.593E-10
RED MARR 1.420E-15 1.729E-12 3.793E-11 6.768E-17-1.000E+00 3.100E-09 3.500E-09
BONE SUR 2.600E-15 3.287E-12 7.147E-11 1.275E-16-1.000E+00 7.050E-09 7.990E-09
THYROID 1.560E-15 1.923E-12 4.201E-11 7.495E-17-1.000E+00 1.560E-10 1.572E-10
REMAINDER 1.410E-15 1.746E-12 3.822E-11 6.819E-17-1.000E+00 3.270E-09 7.196E-09
EFFECTIVE 3.337E-15 1.974E-12 4.308E-11 7.686E-17-1.000E+00 6.484E-09 2.925E-09
SKIN(FGR) 1.490E-14 1.501E-10 3.360E-09 6.001E-15-1.000E+00 0.000E+00 0.000E+00
Te-131m
GONADS 6.850E-14 4.020E-11 2.343E-10 1.535E-15-1.000E+00 2.340E-10 7.415E-10
BREAST 7.780E-14 3.853E-11 2.246E-10 1.472E-15-1.000E+00 9.250E-11 1.361E-10
LUNGS 6.830E-14 3.657E-11 2.131E-10 1.397E-15-1.000E+00 2.230E-09 6.335E-11

Ref.

RED MARR 6.680E-14 3.736E-11 2.178E-10 1.427E-15-1.000E+00 1.410E-10 2.435E-10
BONE SUR 1.090E-13 5.467E-11 3.189E-10 2.090E-15-1.000E+00 2.270E-10 3.248E-10
THYROID 7.020E-14 3.741E-11 2.181E-10 1.429E-15-1.000E+00 3.610E-08 4.383E-08
REMAINDER 6.550E-14 3.626E-11 2.113E-10 1.385E-15-1.000E+00 9.460E-10 3.153E-09
EFFECTIVE 7.463E-14 3.825E-11 2.229E-10 1.461E-15-1.000E+00 1.758E-09 2.514E-09
SKIN(FGR) 8.850E-14 1.033E-10 6.188E-10 4.056E-15-1.000E+00 0.000E+00 0.000E+00
Te-132
GONADS 1.020E-14 6.812E-12 7.706E-11 2.450E-16-1.000E+00 4.150E-10 5.410E-10
BREAST 1.180E-14 6.756E-12 7.643E-11 2.430E-16-1.000E+00 3.630E-10 3.500E-10
LUNGS 9.650E-15 5.727E-12 6.479E-11 2.060E-16-1.000E+00 1.670E-09 3.300E-10
RED MARR 8.950E-15 5.588E-12 6.322E-11 2.010E-16-1.000E+00 4.270E-10 4.440E-10
BONE SUR 2.420E-14 1.273E-11 1.441E-10 4.580E-16-1.000E+00 7.120E-10 8.300E-10
THYROID 1.020E-14 5.978E-12 6.762E-11 2.150E-16-1.000E+00 6.280E-08 5.950E-08
REMAINDER 9.160E-15 5.644E-12 6.385E-11 2.030E-16-1.000E+00 7.890E-10 1.490E-09
EFFECTIVE 1.030E-14 6.339E-12 7.171E-11 2.280E-16-1.000E+00 2.550E-09 2.540E-09
SKIN(FGR) 1.390E-14 8.313E-12 9.405E-11 2.990E-16-1.000E+00 0.000E+00 0.000E+00
I-131
GONADS 1.780E-14 1.119E-11 1.789E-10 3.940E-16-1.000E+00 2.530E-11 4.070E-11
BREAST 2.040E-14 1.082E-11 1.730E-10 3.810E-16-1.000E+00 7.880E-11 1.210E-10
LUNGS 1.760E-14 1.016E-11 1.626E-10 3.580E-16-1.000E+00 6.570E-10 1.020E-10
RED MARR 1.680E-14 1.022E-11 1.635E-10 3.600E-16-1.000E+00 6.260E-11 9.440E-11
BONE SUR 3.450E-14 1.675E-11 2.679E-10 5.900E-16-1.000E+00 5.730E-11 8.720E-11
THYROID 1.810E-14 1.053E-11 1.685E-10 3.710E-16-1.000E+00 2.920E-07 4.760E-07
REMAINDER 1.670E-14 9.908E-12 1.585E-10 3.490E-16-1.000E+00 8.030E-11 1.570E-10
EFFECTIVE 1.820E-14 1.067E-11 1.707E-10 3.760E-16-1.000E+00 8.890E-09 1.440E-08
SKIN(FGR) 2.980E-14 1.825E-11 2.920E-10 6.430E-16-1.000E+00 0.000E+00 0.000E+00
I-132
GONADS 1.090E-13 2.523E-11 2.771E-11 2.320E-15-1.000E+00 9.950E-12 2.330E-11
BREAST 1.240E-13 2.414E-11 2.652E-11 2.220E-15-1.000E+00 1.410E-11 2.520E-11
LUNGS 1.090E-13 2.305E-11 2.532E-11 2.120E-15-1.000E+00 2.710E-10 2.640E-11
RED MARR 1.070E-13 2.360E-11 2.592E-11 2.170E-15-1.000E+00 1.400E-11 2.460E-11
BONE SUR 1.730E-13 3.327E-11 3.655E-11 3.060E-15-1.000E+00 1.240E-11 2.190E-11
THYROID 1.120E-13 2.381E-11 2.616E-11 2.190E-15-1.000E+00 1.740E-09 3.870E-09
REMAINDER 1.050E-13 2.283E-11 2.509E-11 2.100E-15-1.000E+00 3.780E-11 1.650E-10
EFFECTIVE 1.120E-13 2.403E-11 2.640E-11 2.210E-15-1.000E+00 1.030E-10 1.820E-10
SKIN(FGR) 1.580E-13 8.199E-11 9.007E-11 7.540E-15-1.000E+00 0.000E+00 0.000E+00
I-133
GONADS 2.870E-14 1.585E-11 6.748E-11 6.270E-16-1.000E+00 1.950E-11 3.630E-11
BREAST 3.280E-14 1.519E-11 6.468E-11 6.010E-16-1.000E+00 2.940E-11 4.680E-11
LUNGS 2.860E-14 1.446E-11 6.156E-11 5.720E-16-1.000E+00 8.200E-10 4.530E-11
RED MARR 2.770E-14 1.466E-11 6.242E-11 5.800E-16-1.000E+00 2.720E-11 4.300E-11
BONE SUR 4.870E-14 2.161E-11 9.202E-11 8.550E-16-1.000E+00 2.520E-11 4.070E-11
THYROID 2.930E-14 1.502E-11 6.393E-11 5.940E-16-1.000E+00 4.860E-08 9.100E-08
REMAINDER 2.730E-14 1.418E-11 6.038E-11 5.610E-16-1.000E+00 5.000E-11 1.550E-10
EFFECTIVE 2.940E-14 1.509E-11 6.425E-11 5.970E-16-1.000E+00 1.580E-09 2.800E-09
SKIN(FGR) 5.830E-14 1.150E-10 4.897E-10 4.550E-15-1.000E+00 0.000E+00 0.000E+00
I-134
GONADS 1.270E-13 1.200E-11 1.202E-11 2.640E-15-1.000E+00 4.250E-12 1.100E-11

ENGINEERING SERVICES	CALCULATION CONTINUATION SHEET	Page __D33__ (Next __D34 _)

Project: Nine Mile Point Nuclear Station Unit: __2_ Disposition: ____

Originator/Date	Reviewer/Date	Calculation No.	Revision
J. Metcalf 5/29/2007	Appendix E	H21C-103	0

Ref.

BREAST 1.440E-13 1.145E-11 1.147E-11 2.520E-15-1.000E+00 6.170E-12 1.170E-11
LUNGS 1.270E-13 1.100E-11 1.102E-11 2.420E-15-1.000E+00 1.430E-10 1.260E-11
RED MARR 1.250E-13 1.127E-11 1.129E-11 2.480E-15-1.000E+00 6.080E-12 1.090E-11
BONE SUR 1.960E-13 1.568E-11 1.571E-11 3.450E-15-1.000E+00 5.310E-12 9.320E-12
THYROID 1.300E-13 1.127E-11 1.129E-11 2.480E-15-1.000E+00 2.880E-10 6.210E-10
REMAINDER 1.220E-13 1.091E-11 1.093E-11 2.400E-15-1.000E+00 2.270E-11 1.340E-10
EFFECTIVE 1.300E-13 1.150E-11 1.152E-11 2.530E-15-1.000E+00 3.550E-11 6.660E-11
SKIN(FGR) 1.870E-13 4.477E-11 4.485E-11 9.850E-15-1.000E+00 0.000E+00 0.000E+00
I-135
GONADS 8.078E-14 3.113E-11 5.489E-11 1.599E-15-1.000E+00 1.700E-11 3.610E-11
BREAST 9.143E-14 2.971E-11 5.240E-11 1.526E-15-1.000E+00 2.340E-11 3.850E-11
LUNGS 8.145E-14 2.886E-11 5.089E-11 1.482E-15-1.000E+00 4.410E-10 3.750E-11
RED MARR 8.054E-14 2.965E-11 5.228E-11 1.523E-15-1.000E+00 2.240E-11 3.650E-11
BONE SUR 1.184E-13 3.983E-11 7.024E-11 2.046E-15-1.000E+00 2.010E-11 3.360E-11
THYROID 8.324E-14 2.852E-11 5.030E-11 1.465E-15-1.000E+00 8.460E-09 1.790E-08
REMAINDER 7.861E-14 2.883E-11 5.084E-11 1.481E-15-1.000E+00 4.700E-11 1.540E-10
EFFECTIVE 8.294E-14 2.989E-11 5.271E-11 1.535E-15-1.000E+00 3.320E-10 6.080E-10
SKIN(FGR) 1.156E-13 9.826E-11 1.733E-10 5.047E-15-1.000E+00 0.000E+00 0.000E+00
Xe-133
GONADS 1.610E-15 1.465E-12 2.052E-11 5.200E-17-1.000E+00 0.000E+00 0.000E+00
BREAST 1.960E-15 1.505E-12 2.107E-11 5.340E-17-1.000E+00 0.000E+00 0.000E+00
LUNGS 1.320E-15 1.045E-12 1.464E-11 3.710E-17-1.000E+00 0.000E+00 0.000E+00
RED MARR 1.070E-15 8.791E-13 1.231E-11 3.120E-17-1.000E+00 0.000E+00 0.000E+00
BONE SUR 5.130E-15 4.254E-12 5.958E-11 1.510E-16-1.000E+00 0.000E+00 0.000E+00
THYROID 1.510E-15 1.181E-12 1.653E-11 4.190E-17-1.000E+00 0.000E+00 0.000E+00
REMAINDER 1.240E-15 1.042E-12 1.460E-11 3.700E-17-1.000E+00 0.000E+00 0.000E+00
EFFECTIVE 1.560E-15 1.299E-12 1.819E-11 4.610E-17-1.000E+00 0.000E+00 0.000E+00
SKIN(FGR) 4.970E-15 1.953E-12 2.734E-11 6.930E-17-1.000E+00 0.000E+00 0.000E+00
Xe-133m
GONADS 1.610E-15 1.465E-12 2.052E-11 5.200E-17-1.000E+00 0.000E+00 0.000E+00
BREAST 1.960E-15 1.505E-12 2.107E-11 5.340E-17-1.000E+00 0.000E+00 0.000E+00
LUNGS 1.320E-15 1.045E-12 1.464E-11 3.710E-17-1.000E+00 0.000E+00 0.000E+00
RED MARR 1.070E-15 8.791E-13 1.231E-11 3.120E-17-1.000E+00 0.000E+00 0.000E+00
BONE SUR 5.130E-15 4.254E-12 5.958E-11 1.510E-16-1.000E+00 0.000E+00 0.000E+00
THYROID 1.510E-15 1.181E-12 1.653E-11 4.190E-17-1.000E+00 0.000E+00 0.000E+00
REMAINDER 1.240E-15 1.042E-12 1.460E-11 3.700E-17-1.000E+00 0.000E+00 0.000E+00
EFFECTIVE 1.370E-15 1.299E-12 1.819E-11 4.610E-17-1.000E+00 0.000E+00 0.000E+00
SKIN(FGR) 4.970E-15 1.953E-12 2.734E-11 6.930E-17-1.000E+00 0.000E+00 0.000E+00
Xe-135
GONADS 1.170E-14 5.455E-12 1.194E-11 2.530E-16-1.000E+00 0.000E+00 0.000E+00
BREAST 1.330E-14 5.325E-12 1.166E-11 2.470E-16-1.000E+00 0.000E+00 0.000E+00
LUNGS 1.130E-14 4.959E-12 1.086E-11 2.300E-16-1.000E+00 0.000E+00 0.000E+00
RED MARR 1.070E-14 4.959E-12 1.086E-11 2.300E-16-1.000E+00 0.000E+00 0.000E+00
BONE SUR 2.570E-14 9.120E-12 1.997E-11 4.230E-16-1.000E+00 0.000E+00 0.000E+00
THYROID 1.180E-14 5.023E-12 1.100E-11 2.330E-16-1.000E+00 0.000E+00 0.000E+00
REMAINDER 1.080E-14 4.829E-12 1.058E-11 2.240E-16-1.000E+00 0.000E+00 0.000E+00
EFFECTIVE 1.190E-14 5.217E-12 1.142E-11 2.420E-16-1.000E+00 0.000E+00 0.000E+00
SKIN(FGR) 3.120E-14 4.506E-11 9.867E-11 2.090E-15-1.000E+00 0.000E+00 0.000E+00

Ref.

Xe-135m
GONADS 2.000E-14 5.933E-13 5.933E-13 4.480E-16-1.000E+00 0.000E+00 0.000E+00
BREAST 2.290E-14 5.695E-13 5.695E-13 4.300E-16-1.000E+00 0.000E+00 0.000E+00
LUNGS 1.980E-14 5.351E-13 5.351E-13 4.040E-16-1.000E+00 0.000E+00 0.000E+00
RED MARR 1.910E-14 5.404E-13 5.404E-13 4.080E-16-1.000E+00 0.000E+00 0.000E+00
BONE SUR 3.500E-14 8.251E-13 8.251E-13 6.230E-16-1.000E+00 0.000E+00 0.000E+00
THYROID 2.040E-14 5.615E-13 5.615E-13 4.240E-16-1.000E+00 0.000E+00 0.000E+00
REMAINDER 1.890E-14 5.245E-13 5.245E-13 3.960E-16-1.000E+00 0.000E+00 0.000E+00
EFFECTIVE 2.040E-14 5.615E-13 5.615E-13 4.240E-16-1.000E+00 0.000E+00 0.000E+00
SKIN(FGR) 2.970E-14 1.867E-12 1.867E-12 1.410E-15-1.000E+00 0.000E+00 0.000E+00
Xe-138
GONADS 5.590E-14 1.315E-12 1.315E-12 1.070E-15-1.000E+00 0.000E+00 0.000E+00
BREAST 6.320E-14 1.254E-12 1.254E-12 1.020E-15-1.000E+00 0.000E+00 0.000E+00
LUNGS 5.660E-14 1.225E-12 1.225E-12 9.970E-16-1.000E+00 0.000E+00 0.000E+00
RED MARR 5.600E-14 1.254E-12 1.254E-12 1.020E-15-1.000E+00 0.000E+00 0.000E+00
BONE SUR 8.460E-14 1.733E-12 1.733E-12 1.410E-15-1.000E+00 0.000E+00 0.000E+00
THYROID 5.770E-14 1.174E-12 1.174E-12 9.550E-16-1.000E+00 0.000E+00 0.000E+00
REMAINDER 5.490E-14 1.222E-12 1.222E-12 9.940E-16-1.000E+00 0.000E+00 0.000E+00
EFFECTIVE 5.770E-14 1.266E-12 1.266E-12 1.030E-15-1.000E+00 0.000E+00 0.000E+00
SKIN(FGR) 1.070E-13 9.403E-12 9.403E-12 7.650E-15-1.000E+00 0.000E+00 0.000E+00
Cs-134
GONADS 7.400E-14 4.607E-11 9.646E-10 1.600E-15-1.000E+00 1.300E-08 2.060E-08
BREAST 8.430E-14 4.406E-11 9.224E-10 1.530E-15-1.000E+00 1.080E-08 1.720E-08
LUNGS 7.370E-14 4.204E-11 8.802E-10 1.460E-15-1.000E+00 1.180E-08 1.760E-08
RED MARR 7.190E-14 4.262E-11 8.922E-10 1.480E-15-1.000E+00 1.180E-08 1.870E-08
BONE SUR 1.200E-13 6.105E-11 1.278E-09 2.120E-15-1.000E+00 1.100E-08 1.740E-08
THYROID 7.570E-14 4.377E-11 9.163E-10 1.520E-15-1.000E+00 1.110E-08 1.760E-08
REMAINDER 7.060E-14 4.147E-11 8.681E-10 1.440E-15-1.000E+00 1.390E-08 2.210E-08
EFFECTIVE 7.570E-14 4.377E-11 9.163E-10 1.520E-15-1.000E+00 1.250E-08 1.980E-08
SKIN(FGR) 9.450E-14 6.249E-11 1.308E-09 2.170E-15-1.000E+00 0.000E+00 0.000E+00
Cs-136
GONADS 1.040E-13 6.223E-11 1.102E-09 2.180E-15-1.000E+00 1.880E-09 3.040E-09
BREAST 1.180E-13 5.966E-11 1.056E-09 2.090E-15-1.000E+00 1.670E-09 2.650E-09
LUNGS 1.040E-13 5.710E-11 1.011E-09 2.000E-15-1.000E+00 2.320E-09 2.620E-09
RED MARR 1.010E-13 5.824E-11 1.031E-09 2.040E-15-1.000E+00 1.860E-09 2.950E-09
BONE SUR 1.660E-13 8.422E-11 1.491E-09 2.950E-15-1.000E+00 1.700E-09 2.710E-09
THYROID 1.070E-13 5.852E-11 1.036E-09 2.050E-15-1.000E+00 1.730E-09 2.740E-09
REMAINDER 9.950E-14 5.652E-11 1.001E-09 1.980E-15-1.000E+00 2.190E-09 3.520E-09
EFFECTIVE 1.060E-13 5.966E-11 1.056E-09 2.090E-15-1.000E+00 1.980E-09 3.040E-09
SKIN(FGR) 1.250E-13 7.251E-11 1.284E-09 2.540E-15-1.000E+00 0.000E+00 0.000E+00
Cs-137
GONADS 2.669E-14 1.669E-11 3.530E-10 5.840E-16-1.000E+00 8.760E-09 1.390E-08
BREAST 3.047E-14 1.596E-11 3.376E-10 5.585E-16-1.000E+00 7.840E-09 1.240E-08
LUNGS 2.649E-14 1.517E-11 3.209E-10 5.309E-16-1.000E+00 8.820E-09 1.270E-08
RED MARR 2.583E-14 1.542E-11 3.260E-10 5.394E-16-1.000E+00 8.300E-09 1.320E-08
BONE SUR 4.382E-14 2.238E-11 4.734E-10 7.832E-16-1.000E+00 7.940E-09 1.260E-08
THYROID 2.725E-14 1.588E-11 3.358E-10 5.556E-16-1.000E+00 7.930E-09 1.260E-08
REMAINDER 2.536E-14 1.490E-11 3.152E-10 5.215E-16-1.000E+00 9.120E-09 1.450E-08

ENGINEERING SERVICES	CALCULATION CONTINUATION SHEET	Page __D35__ (Next __D36 _)

Project: Nine Mile Point Nuclear Station Unit: __2_ Disposition: ____

Originator/Date	Reviewer/Date	Calculation No.	Revision
J. Metcalf 5/29/2007	Appendix E	H21C-103	0

Ref.

EFFECTIVE 2.725E-14 1.585E-11 3.353E-10 5.546E-16-1.000E+00 8.630E-09 1.350E-08
SKIN(FGR) 4.392E-14 5.253E-11 1.110E-09 1.836E-15-1.000E+00 0.000E+00 0.000E+00
Ba-139
GONADS 2.130E-15 3.368E-13 3.429E-13 4.790E-17-1.000E+00 2.560E-12 1.560E-12
BREAST 2.450E-15 3.297E-13 3.357E-13 4.690E-17-1.000E+00 2.460E-12 5.170E-13
LUNGS 2.030E-15 3.002E-13 3.057E-13 4.270E-17-1.000E+00 2.530E-10 3.890E-13
RED MARR 1.870E-15 2.932E-13 2.985E-13 4.170E-17-1.000E+00 3.410E-12 8.590E-13
BONE SUR 5.290E-15 6.841E-13 6.965E-13 9.730E-17-1.000E+00 2.490E-12 4.380E-13
THYROID 2.130E-15 3.044E-13 3.100E-13 4.330E-17-1.000E+00 2.400E-12 2.660E-13
REMAINDER 1.920E-15 2.932E-13 2.985E-13 4.170E-17-1.000E+00 4.820E-11 3.570E-10
EFFECTIVE 2.170E-15 3.227E-13 3.286E-13 4.590E-17-1.000E+00 4.640E-11 1.080E-10
SKIN(FGR) 6.160E-14 7.241E-11 7.373E-11 1.030E-14-1.000E+00 0.000E+00 0.000E+00
Ba-140
GONADS 8.410E-15 5.451E-12 9.607E-11 1.910E-16-1.000E+00 4.300E-10 9.960E-10
BREAST 9.640E-15 5.280E-12 9.305E-11 1.850E-16-1.000E+00 2.870E-10 1.590E-10
LUNGS 8.270E-15 4.852E-12 8.550E-11 1.700E-16-1.000E+00 1.660E-09 6.630E-11
RED MARR 7.930E-15 4.880E-12 8.601E-11 1.710E-16-1.000E+00 1.290E-09 4.390E-10
BONE SUR 1.550E-14 8.020E-12 1.413E-10 2.810E-16-1.000E+00 2.410E-09 5.530E-10
THYROID 8.530E-15 5.109E-12 9.003E-11 1.790E-16-1.000E+00 2.560E-10 5.250E-11
REMAINDER 7.890E-15 4.766E-12 8.399E-11 1.670E-16-1.000E+00 1.410E-09 7.370E-09
EFFECTIVE 8.580E-15 5.137E-12 9.053E-11 1.800E-16-1.000E+00 1.010E-09 2.560E-09
SKIN(FGR) 2.520E-14 5.565E-11 9.808E-10 1.950E-15-1.000E+00 0.000E+00 0.000E+00
La-140
GONADS 1.140E-13 6.027E-11 4.425E-10 2.240E-15-1.000E+00 4.540E-10 1.340E-09
BREAST 1.290E-13 5.758E-11 4.228E-10 2.140E-15-1.000E+00 1.450E-10 1.800E-10
LUNGS 1.150E-13 5.596E-11 4.109E-10 2.080E-15-1.000E+00 4.210E-09 4.010E-11
RED MARR 1.140E-13 5.731E-11 4.208E-10 2.130E-15-1.000E+00 2.140E-10 2.810E-10
BONE SUR 1.690E-13 7.776E-11 5.709E-10 2.890E-15-1.000E+00 1.410E-10 9.770E-11
THYROID 1.180E-13 5.462E-11 4.010E-10 2.030E-15-1.000E+00 6.870E-11 6.400E-12
REMAINDER 1.110E-13 5.569E-11 4.089E-10 2.070E-15-1.000E+00 2.120E-09 6.260E-09
EFFECTIVE 1.170E-13 5.812E-11 4.267E-10 2.160E-15-1.000E+00 1.310E-09 2.280E-09
SKIN(FGR) 1.660E-13 2.217E-10 1.628E-09 8.240E-15-1.000E+00 0.000E+00 0.000E+00
La-141
GONADS 2.330E-15 7.315E-13 9.675E-13 4.740E-17-1.000E+00 1.010E-11 3.770E-12
BREAST 2.640E-15 7.007E-13 9.267E-13 4.540E-17-1.000E+00 9.840E-12 7.070E-13
LUNGS 2.340E-15 6.713E-13 8.879E-13 4.350E-17-1.000E+00 6.460E-10 2.720E-13
RED MARR 2.310E-15 6.852E-13 9.063E-13 4.440E-17-1.000E+00 2.930E-11 1.070E-12
BONE SUR 3.490E-15 9.923E-13 1.312E-12 6.430E-17-1.000E+00 1.200E-10 6.060E-13
THYROID 2.390E-15 6.590E-13 8.716E-13 4.270E-17-1.000E+00 9.400E-12 5.290E-14
REMAINDER 2.260E-15 6.682E-13 8.838E-13 4.330E-17-1.000E+00 2.280E-10 1.240E-09
EFFECTIVE 2.390E-15 7.007E-13 9.267E-13 4.540E-17-1.000E+00 1.570E-10 3.740E-10
SKIN(FGR) 6.580E-14 1.667E-10 2.204E-10 1.080E-14-1.000E+00 0.000E+00 0.000E+00
La-142
GONADS 1.400E-13 1.978E-11 2.034E-11 2.540E-15-1.000E+00 1.660E-11 6.990E-11
BREAST 1.570E-13 1.885E-11 1.938E-11 2.420E-15-1.000E+00 1.130E-11 1.540E-11
LUNGS 1.420E-13 1.846E-11 1.898E-11 2.370E-15-1.000E+00 3.010E-10 8.400E-12
RED MARR 1.420E-13 1.900E-11 1.954E-11 2.440E-15-1.000E+00 1.360E-11 1.930E-11
BONE SUR 1.950E-13 2.484E-11 2.554E-11 3.190E-15-1.000E+00 1.110E-11 7.400E-12

ENGINEERING SERVICES	CALCULATION CONTINUATION SHEET	Page __D36__ (Next __D37 _)

Project: Nine Mile Point Nuclear Station Unit: __2_ Disposition: ____

Originator/Date	Reviewer/Date	Calculation No.	Revision
J. Metcalf 5/29/2007	Appendix E	H21C-103	0

Ref.

THYROID 1.450E-13 1.768E-11 1.818E-11 2.270E-15-1.000E+00 8.740E-12 1.160E-12
REMAINDER 1.380E-13 1.853E-11 1.906E-11 2.380E-15-1.000E+00 8.070E-11 5.200E-10
EFFECTIVE 1.440E-13 1.916E-11 1.970E-11 2.460E-15-1.000E+00 6.840E-11 1.790E-10
SKIN(FGR) 2.160E-13 9.111E-11 9.368E-11 1.170E-14-1.000E+00 0.000E+00 0.000E+00
Ce-141
GONADS 3.380E-15 2.213E-12 4.332E-11 7.710E-17-1.000E+00 5.540E-11 1.080E-10
BREAST 3.930E-15 2.170E-12 4.247E-11 7.560E-17-1.000E+00 4.460E-11 1.110E-11
LUNGS 3.170E-15 1.951E-12 3.820E-11 6.800E-17-1.000E+00 1.670E-08 1.430E-12
RED MARR 2.830E-15 1.860E-12 3.641E-11 6.480E-17-1.000E+00 8.960E-11 3.390E-11
BONE SUR 9.410E-15 5.166E-12 1.011E-10 1.800E-16-1.000E+00 2.540E-10 2.300E-11
THYROID 3.350E-15 2.003E-12 3.922E-11 6.980E-17-1.000E+00 2.550E-11 1.800E-13
REMAINDER 2.980E-15 1.894E-12 3.708E-11 6.600E-17-1.000E+00 1.260E-09 2.500E-09
EFFECTIVE 3.430E-15 2.118E-12 4.146E-11 7.380E-17-1.000E+00 2.420E-09 7.830E-10
SKIN(FGR) 1.020E-14 3.788E-12 7.416E-11 1.320E-16-1.000E+00 0.000E+00 0.000E+00
Ce-143
GONADS 1.280E-14 7.900E-12 4.958E-11 2.980E-16-1.000E+00 7.530E-11 2.120E-10
BREAST 1.470E-14 7.688E-12 4.825E-11 2.900E-16-1.000E+00 1.660E-11 2.320E-11
LUNGS 1.230E-14 6.893E-12 4.325E-11 2.600E-16-1.000E+00 3.880E-09 3.820E-12
RED MARR 1.170E-14 6.787E-12 4.259E-11 2.560E-16-1.000E+00 2.960E-11 5.070E-11
BONE SUR 2.520E-14 1.323E-11 8.302E-11 4.990E-16-1.000E+00 1.640E-11 1.610E-11
THYROID 1.280E-14 7.211E-12 4.525E-11 2.720E-16-1.000E+00 6.230E-12 4.350E-13
REMAINDER 1.170E-14 6.734E-12 4.226E-11 2.540E-16-1.000E+00 1.420E-09 3.890E-09
EFFECTIVE 1.290E-14 7.396E-12 4.642E-11 2.790E-16-1.000E+00 9.160E-10 1.230E-09
SKIN(FGR) 3.960E-14 1.058E-10 6.638E-10 3.990E-15-1.000E+00 0.000E+00 0.000E+00
Ce-144
GONADS 2.725E-15 6.328E-13 1.319E-11 6.088E-17-1.000E+00 2.390E-10 6.987E-11
BREAST 3.129E-15 6.274E-13 1.307E-11 5.922E-17-1.000E+00 3.480E-10 1.223E-11
LUNGS 2.639E-15 5.228E-13 1.089E-11 5.362E-17-1.000E+00 7.911E-07 6.551E-12
RED MARR 2.507E-15 4.755E-13 9.907E-12 5.247E-17-1.000E+00 2.880E-09 8.923E-11
BONE SUR 5.441E-15 1.646E-12 3.429E-11 1.127E-16-1.000E+00 4.720E-09 1.280E-10
THYROID 2.753E-15 5.529E-13 1.152E-11 5.418E-17-1.000E+00 2.920E-10 5.154E-12
REMAINDER 2.534E-15 5.086E-13 1.060E-11 5.283E-17-1.000E+00 1.910E-08 1.890E-08
EFFECTIVE 2.773E-15 5.909E-13 1.231E-11 5.766E-17-1.000E+00 1.010E-07 5.711E-09
SKIN(FGR) 8.574E-14 7.648E-13 1.594E-11 1.250E-14-1.000E+00 0.000E+00 0.000E+00
Pr-143
GONADS 2.130E-17 2.264E-14 4.032E-13 7.930E-19-1.000E+00 4.370E-18 8.990E-18
BREAST 2.550E-17 2.330E-14 4.149E-13 8.160E-19-1.000E+00 2.220E-18 1.090E-18
LUNGS 1.860E-17 1.642E-14 2.923E-13 5.750E-19-1.000E+00 1.330E-08 1.910E-19
RED MARR 1.620E-17 1.493E-14 2.659E-13 5.230E-19-1.000E+00 1.480E-11 1.030E-12
BONE SUR 5.930E-17 5.454E-14 9.711E-13 1.910E-18-1.000E+00 1.490E-11 1.030E-12
THYROID 2.050E-17 1.802E-14 3.208E-13 6.310E-19-1.000E+00 1.680E-18 2.660E-20
REMAINDER 1.760E-17 1.642E-14 2.923E-13 5.750E-19-1.000E+00 1.970E-09 4.220E-09
EFFECTIVE 2.100E-17 2.002E-14 3.564E-13 7.010E-19-1.000E+00 2.190E-09 1.270E-09
SKIN(FGR) 1.760E-14 5.711E-11 1.017E-09 2.000E-15-1.000E+00 0.000E+00 0.000E+00
Nd-147
GONADS 6.130E-15 4.218E-12 7.235E-11 1.480E-16-1.000E+00 8.410E-11 1.790E-10
BREAST 7.120E-15 4.132E-12 7.088E-11 1.450E-16-1.000E+00 3.450E-11 1.870E-11
LUNGS 5.820E-15 3.648E-12 6.257E-11 1.280E-16-1.000E+00 1.060E-08 2.440E-12

Ref.

RED MARR 5.400E-15 3.505E-12 6.013E-11 1.230E-16-1.000E+00 9.190E-11 5.050E-11
BONE SUR 1.320E-14 8.265E-12 1.418E-10 2.900E-16-1.000E+00 3.260E-10 2.220E-11
THYROID 6.120E-15 3.876E-12 6.648E-11 1.360E-16-1.000E+00 1.820E-11 2.640E-13
REMAINDER 5.530E-15 3.562E-12 6.111E-11 1.250E-16-1.000E+00 1.760E-09 3.760E-09
EFFECTIVE 6.190E-15 3.961E-12 6.795E-11 1.390E-16-1.000E+00 1.850E-09 1.180E-09
SKIN(FGR) 1.950E-14 3.135E-11 5.377E-10 1.100E-15-1.000E+00 0.000E+00 0.000E+00
Np-239
GONADS 7.530E-15 4.691E-12 4.380E-11 1.710E-16-1.000E+00 7.450E-11 1.620E-10
BREAST 8.730E-15 4.636E-12 4.329E-11 1.690E-16-1.000E+00 1.630E-11 1.720E-11
LUNGS 7.180E-15 4.115E-12 3.842E-11 1.500E-16-1.000E+00 2.360E-09 2.400E-12
RED MARR 6.500E-15 4.005E-12 3.740E-11 1.460E-16-1.000E+00 2.080E-10 4.660E-11
BONE SUR 2.000E-14 1.001E-11 9.349E-11 3.650E-16-1.000E+00 2.030E-09 3.590E-11
THYROID 7.520E-15 4.197E-12 3.919E-11 1.530E-16-1.000E+00 7.620E-12 2.070E-13
REMAINDER 6.760E-15 4.005E-12 3.740E-11 1.460E-16-1.000E+00 9.590E-10 2.770E-09
EFFECTIVE 7.690E-15 4.471E-12 4.175E-11 1.630E-16-1.000E+00 6.780E-10 8.820E-10
SKIN(FGR) 1.600E-14 7.215E-12 6.737E-11 2.630E-16-1.000E+00 0.000E+00 0.000E+00
Pu-238
GONADS 6.560E-18 4.291E-14 9.011E-13 1.490E-18-1.000E+00 1.040E-05 2.330E-09
BREAST 1.270E-17 5.558E-14 1.167E-12 1.930E-18-1.000E+00 4.400E-10 1.800E-13
LUNGS 1.060E-18 2.267E-15 4.759E-14 7.870E-20-1.000E+00 3.200E-04 8.640E-14
RED MARR 1.680E-18 5.587E-15 1.173E-13 1.940E-19-1.000E+00 5.800E-05 1.270E-08
BONE SUR 9.300E-18 3.514E-14 7.378E-13 1.220E-18-1.000E+00 7.250E-04 1.580E-07
THYROID 4.010E-18 9.792E-15 2.056E-13 3.400E-19-1.000E+00 3.860E-10 7.990E-14
REMAINDER 1.990E-18 9.216E-15 1.935E-13 3.200E-19-1.000E+00 2.740E-05 2.180E-08
EFFECTIVE 4.880E-18 2.413E-14 5.068E-13 8.380E-19-1.000E+00 7.790E-05 1.340E-08
SKIN(FGR) 4.090E-17 2.776E-13 5.830E-12 9.640E-18-1.000E+00 0.000E+00 0.000E+00
Pu-239
GONADS 4.840E-18 1.768E-14 3.713E-13 6.140E-19-1.000E+00 1.200E-05 2.640E-09
BREAST 7.550E-18 2.238E-14 4.699E-13 7.770E-19-1.000E+00 3.990E-10 1.210E-13
LUNGS 2.650E-18 2.267E-15 4.760E-14 7.870E-20-1.000E+00 3.230E-04 7.890E-14
RED MARR 2.670E-18 3.456E-15 7.258E-14 1.200E-19-1.000E+00 6.570E-05 1.410E-08
BONE SUR 9.470E-18 1.673E-14 3.514E-13 5.810E-19-1.000E+00 8.210E-04 1.760E-07
THYROID 3.880E-18 5.126E-15 1.077E-13 1.780E-19-1.000E+00 3.750E-10 7.500E-14
REMAINDER 2.860E-18 4.838E-15 1.016E-13 1.680E-19-1.000E+00 3.020E-05 2.120E-08
EFFECTIVE 4.240E-18 1.057E-14 2.220E-13 3.670E-19-1.000E+00 8.330E-05 1.400E-08
SKIN(FGR) 1.860E-17 1.057E-13 2.220E-12 3.670E-18-1.000E+00 0.000E+00 0.000E+00
Pu-240
GONADS 6.360E-18 4.118E-14 8.649E-13 1.430E-18-1.000E+00 1.200E-05 2.640E-09
BREAST 1.230E-17 5.328E-14 1.119E-12 1.850E-18-1.000E+00 4.330E-10 1.730E-13
LUNGS 1.090E-18 2.249E-15 4.723E-14 7.810E-20-1.000E+00 3.230E-04 8.220E-14
RED MARR 1.650E-18 5.386E-15 1.131E-13 1.870E-19-1.000E+00 6.570E-05 1.410E-08
BONE SUR 9.260E-18 3.398E-14 7.137E-13 1.180E-18-1.000E+00 8.210E-04 1.760E-07
THYROID 3.920E-18 9.446E-15 1.984E-13 3.280E-19-1.000E+00 3.760E-10 7.510E-14
REMAINDER 1.960E-18 8.870E-15 1.863E-13 3.080E-19-1.000E+00 3.020E-05 2.130E-08
EFFECTIVE 4.750E-18 2.313E-14 4.857E-13 8.030E-19-1.000E+00 8.330E-05 1.400E-08
SKIN(FGR) 3.920E-17 2.644E-13 5.552E-12 9.180E-18-1.000E+00 0.000E+00 0.000E+00
Pu-241
GONADS 7.190E-20 6.653E-17 1.396E-15 2.310E-21-1.000E+00 2.760E-07 5.660E-11

Ref.

BREAST 8.670E-20 7.229E-17 1.517E-15 2.510E-21-1.000E+00 2.140E-11 2.790E-15
LUNGS 6.480E-20 4.090E-17 8.584E-16 1.420E-21-1.000E+00 3.180E-06 4.480E-15
RED MARR 5.630E-20 4.003E-17 8.403E-16 1.390E-21-1.000E+00 1.430E-06 2.780E-10
BONE SUR 2.190E-19 1.385E-16 2.908E-15 4.810E-21-1.000E+00 1.780E-05 3.480E-09
THYROID 6.980E-20 4.522E-17 9.491E-16 1.570E-21-1.000E+00 9.150E-12 1.010E-15
REMAINDER 6.090E-20 4.291E-17 9.007E-16 1.490E-21-1.000E+00 6.020E-07 1.850E-10
EFFECTIVE 7.250E-20 5.558E-17 1.167E-15 1.930E-21-1.000E+00 1.340E-06 2.070E-10
SKIN(FGR) 1.170E-19 2.033E-16 4.268E-15 7.060E-21-1.000E+00 0.000E+00 0.000E+00
Am-241
GONADS 8.580E-16 9.360E-13 1.966E-11 3.250E-17-1.000E+00 3.250E-05 2.700E-07
BREAST 1.070E-15 1.014E-12 2.129E-11 3.520E-17-1.000E+00 2.670E-09 2.620E-11
LUNGS 6.740E-16 5.789E-13 1.216E-11 2.010E-17-1.000E+00 1.840E-05 3.360E-11
RED MARR 5.210E-16 4.838E-13 1.016E-11 1.680E-17-1.000E+00 1.740E-04 1.450E-06
BONE SUR 2.870E-15 2.678E-12 5.625E-11 9.300E-17-1.000E+00 2.170E-03 1.810E-05
THYROID 7.830E-16 6.365E-13 1.337E-11 2.210E-17-1.000E+00 1.600E-09 1.320E-11
REMAINDER 6.340E-16 5.933E-13 1.246E-11 2.060E-17-1.000E+00 7.820E-05 6.660E-07
EFFECTIVE 8.180E-16 7.920E-13 1.663E-11 2.750E-17-1.000E+00 1.200E-04 9.840E-07
SKIN(FGR) 1.280E-15 2.396E-12 5.032E-11 8.320E-17-1.000E+00 0.000E+00 0.000E+00
Cm-242
GONADS 7.830E-18 4.893E-14 1.013E-12 1.700E-18-1.000E+00 5.700E-07 5.200E-09
BREAST 1.480E-17 6.159E-14 1.275E-12 2.140E-18-1.000E+00 9.440E-10 8.950E-12
LUNGS 1.130E-18 3.022E-15 6.257E-14 1.050E-19-1.000E+00 1.550E-05 8.840E-12
RED MARR 1.890E-18 6.562E-15 1.359E-13 2.280E-19-1.000E+00 3.900E-06 3.570E-08
BONE SUR 1.060E-17 4.231E-14 8.759E-13 1.470E-18-1.000E+00 4.870E-05 4.460E-07
THYROID 4.910E-18 1.261E-14 2.610E-13 4.380E-19-1.000E+00 9.410E-10 8.820E-12
REMAINDER 2.270E-18 1.079E-14 2.235E-13 3.750E-19-1.000E+00 2.450E-06 4.020E-08
EFFECTIVE 5.690E-18 2.751E-14 5.697E-13 9.560E-19-1.000E+00 4.670E-06 3.100E-08
SKIN(FGR) 4.290E-17 2.700E-13 5.589E-12 9.380E-18-1.000E+00 0.000E+00 0.000E+00
Cm-244
GONADS 6.900E-18 4.522E-14 9.492E-13 1.570E-18-1.000E+00 1.590E-05 1.330E-07
BREAST 1.330E-17 5.702E-14 1.197E-12 1.980E-18-1.000E+00 1.040E-09 8.820E-12
LUNGS 7.080E-19 2.592E-15 5.441E-14 9.000E-20-1.000E+00 1.930E-05 8.810E-12
RED MARR 1.460E-18 5.875E-15 1.233E-13 2.040E-19-1.000E+00 9.380E-05 7.820E-07
BONE SUR 8.820E-18 3.859E-14 8.101E-13 1.340E-18-1.000E+00 1.170E-03 9.770E-06
THYROID 4.190E-18 1.146E-14 2.406E-13 3.980E-19-1.000E+00 1.010E-09 8.440E-12
REMAINDER 1.810E-18 9.821E-15 2.062E-13 3.410E-19-1.000E+00 4.780E-05 4.150E-07
EFFECTIVE 4.910E-18 2.529E-14 5.308E-13 8.780E-19-1.000E+00 6.700E-05 5.450E-07
SKIN(FGR) 3.910E-17 2.506E-13 5.260E-12 8.700E-18-1.000E+00 0.000E+00 0.000E+00

Ref.

Appendix D-3: Radtrad Output (.o0) file, nmp2crda.2pmp'''.out (Excerpt)

```
#################################################################
                    Cumulative Dose Summary
#################################################################
```

	EAB		LPZ		CR	
Time (hr)	Thyroid (rem)	TEDE (rem)	Thyroid (rem)	TEDE (rem)	Thyroid (rem)	TEDE (rem)
0.000	0.0000E+00	0.0000E+00	0.0000E+00	0.0000E+00	0.0000E+00	0.0000E+00
0.001	3.3411E-06	6.1914E-07	1.6028E-06	2.9702E-07	4.3407E-07	1.7310E-08
0.300	6.6560E-01	1.0631E-01	3.1931E-01	5.1002E-02	9.7631E-01	3.7945E-02
0.600	2.0506E+00	2.8362E-01	9.8374E-01	1.3606E-01	4.4824E+00	1.6836E-01
0.900	3.6726E+00	4.6189E-01	1.7619E+00	2.2158E-01	8.8745E+00	3.2758E-01
1.200	5.3438E+00	6.2863E-01	2.5636E+00	3.0157E-01	1.3406E+01	4.8915E-01
1.500	6.9923E+00	7.8247E-01	3.3544E+00	3.7537E-01	1.7879E+01	6.4681E-01
1.800	8.5916E+00	9.2422E-01	4.1216E+00	4.4338E-01	2.2219E+01	7.9848E-01
2.100	1.0133E+01	1.0550E+00	4.8611E+00	5.0614E-01	2.6402E+01	9.4361E-01
2.300	1.1127E+01	1.1367E+00	5.3381E+00	5.4532E-01	2.9101E+01	1.0367E+00
2.600	1.2570E+01	1.2517E+00	6.0300E+00	6.0048E-01	3.1579E+01	1.1219E+00
2.900	1.3954E+01	1.3584E+00	6.6942E+00	6.5168E-01	3.3675E+01	1.1936E+00
3.200	1.5283E+01	1.4577E+00	7.3317E+00	6.9929E-01	3.5687E+01	1.2620E+00
3.500	1.6559E+01	1.5501E+00	7.9436E+00	7.4364E-01	3.7618E+01	1.3273E+00
3.800	1.7783E+01	1.6364E+00	8.5309E+00	7.8503E-01	3.9472E+01	1.3898E+00
4.100	1.8958E+01	1.7171E+00	9.0946E+00	8.2373E-01	4.1251E+01	1.4495E+00
4.400	2.0086E+01	1.7926E+00	9.6357E+00	8.5995E-01	4.2959E+01	1.5066E+00
4.700	2.1168E+01	1.8634E+00	1.0155E+01	8.9391E-01	4.4598E+01	1.5613E+00
5.000	2.2208E+01	1.9298E+00	1.0654E+01	9.2578E-01	4.6172E+01	1.6136E+00
5.300	2.3205E+01	1.9923E+00	1.1132E+01	9.5575E-01	4.7683E+01	1.6637E+00
5.600	2.4163E+01	2.0510E+00	1.1592E+01	9.8394E-01	4.9134E+01	1.7116E+00
5.900	2.5083E+01	2.1064E+00	1.2033E+01	1.0105E+00	5.0526E+01	1.7575E+00
6.200	2.5966E+01	2.1586E+00	1.2457E+01	1.0356E+00	5.1863E+01	1.8015E+00
6.500	2.6814E+01	2.2079E+00	1.2864E+01	1.0592E+00	5.3147E+01	1.8437E+00
6.800	2.7628E+01	2.2545E+00	1.3254E+01	1.0815E+00	5.4380E+01	1.8840E+00
7.100	2.8410E+01	2.2985E+00	1.3629E+01	1.1027E+00	5.5564E+01	1.9227E+00
7.400	2.9161E+01	2.3402E+00	1.3989E+01	1.1227E+00	5.6701E+01	1.9598E+00
7.700	2.9882E+01	2.3797E+00	1.4335E+01	1.1416E+00	5.7793E+01	1.9954E+00
8.000	3.0575E+01	2.4171E+00	1.4668E+01	1.1596E+00	5.8841E+01	2.0295E+00
8.300	3.0575E+01	2.4171E+00	1.4674E+01	1.1600E+00	5.9326E+01	2.0452E+00
8.600	3.0575E+01	2.4171E+00	1.4680E+01	1.1605E+00	5.9688E+01	2.0570E+00
8.900	3.0575E+01	2.4171E+00	1.4686E+01	1.1609E+00	6.0037E+01	2.0683E+00
9.200	3.0575E+01	2.4171E+00	1.4691E+01	1.1613E+00	6.0371E+01	2.0791E+00
9.500	3.0575E+01	2.4171E+00	1.4696E+01	1.1616E+00	6.0693E+01	2.0894E+00
9.800	3.0575E+01	2.4171E+00	1.4702E+01	1.1620E+00	6.1001E+01	2.0994E+00
10.100	3.0575E+01	2.4171E+00	1.4706E+01	1.1623E+00	6.1298E+01	2.1090E+00
10.400	3.0575E+01	2.4171E+00	1.4711E+01	1.1626E+00	6.1583E+01	2.1181E+00

ENGINEERING SERVICES	CALCULATION CONTINUATION SHEET	Page __D40__ (Next __E1 _)

Project: Nine Mile Point Nuclear Station Unit: __2_ Disposition: ____

Originator/Date	Reviewer/Date	Calculation No.	Revision
J. Metcalf 5/29/2007	Appendix E	H21C-103	0

Ref.

```
24.000 3.0575E+01 2.4171E+00 1.4808E+01 1.1685E+00 6.7455E+01 2.3057E+00
  96.000 3.0575E+01 2.4171E+00 1.4808E+01 1.1685E+00 6.7501E+01 2.3072E+00
 720.000 3.0575E+01 2.4171E+00 1.4808E+01 1.1685E+00 6.7501E+01 2.3072E+00

#################################################################
                        Worst Two-Hour Doses
#################################################################

EAB
   Time    Whole Body    Thyroid        TEDE
   (hr)      (rem)        (rem)         (rem)
    0.3    7.0002E-01   1.0462E+01   1.0304E+00
```

Ref.

Appendix E: Check Calculation Using the STARDOSE Computer Code for Case 2

This appendix presents check calculation results for the CRDA analysis using the Polestar STARDOSE computer code (Reference E-1) to check the RADTRAD results for CRDA 2. The Design Input Data and Assumptions are the same as those used in the main body of the calculation.

The AST application described below for the CRDA is consistent with Reference E-2.

STARDOSE Calculation

The STARDOSE LIBFILE.TXT file is included as Attachment E-1.

The core inventories listed in Column 5 of the LIBFILE1.TXT are from Reference E-3. The Dose Conversion Factors (Column 8 for whole body and Column 12 for CEDE) are the same as in the main body of the calculation. Decay constants (per second) come from Reference E-4.

Knowing that the damaged fuel rod fraction is 1.63%, of which 0.77% is assumed to melt, and the peaking factor is 1.8, one can calculate the release fractions for the difference radionuclide groups.

For instance, the gap and fuel releases for the iodine group are respectively 10% and 50%. 10% of the iodine reaches the condenser and 10% of the iodine in the condenser remains airborne. Therefore, the release fractions for the iodine group are as follows:

From the core to the condenser:
(0.0163) x 1.8 x [(10% x 99.23%) + (50% x 0.77%)] x 10% = 3.02E-04

Fraction airborne in the condenser available for release:
10% x 3.02E-04= 3.02E-05

The release fractions used in STARDOSE for Case 2 are shown in the table below:

Radionuclide Group	Release Fraction from Gap to Coolant	Activity That Reaches the Condenser	Fraction of Condenser Activity Available for Release to Environment	Total Available Release (with peaking factor of 1.8 and 2 assemblies failed out of 764)
Noble Gas	10%	100%	100%	3.02E-03
Iodine	10%	10%	10%	3.02E-05
Cs, Rb	12%	1%	1%	3.63E-07

Ref.

Conclusions

The dose agreement for all cases is adequate. The STARDOSE run confirms the RADTRAD results for the CRDA, Case 2.

The following table compares TEDE values (in rem) calculated from RADTRAD versus STARDOSE.

	Case 2 RADTRAD	Case 2 STARDOSE
EAB	1.03E+00	1.15E+00
LPZ	1.17E+00	1.24E+00
Control Room	2.31E+00	2.42E+00

Appendix References

E-1. "STARDOSE Model Report", Polestar Applied Technology, Inc., PSATCI09.03, January 1997.

E-2. "Alternative Radiological Source Terms for Evaluating Design Basis Accidents at Nuclear Power Reactors", US NRC Regulatory Guide 1.183, Revision 0, July 2000.

E-3. PSAT 3101CF.QA.03, "Design Data Base for Application of the Revised DBA Source Term to Nine Mile Point Unit 2", Revision 0.

E-4 NUREG/CR-5106 (Manual for TACT5 – Version SAIC 9/23/87), File MLWRICRP.30.

Project: Nine Mile Point Nuclear Station Unit: __2__ Disposition: ____

Originator/Date	Reviewer/Date	Calculation No.	Revision
H. Pustulka 5/29/2007	Check of Appendix D	H21C-103	0

Ref.

Attachment E-1: STARDOSE Library File for Case 2 (LIBFILE1.TXT)

n_isotopes 76 n_isotope_groups 11

Kr83m	N_Gas	NONE	NONE	3.27E+03	1.05E-04	0	5.55E-06	0	0	0	0	0	0	0	0	0
Kr85m	N_Gas	NONE	NONE	6.82E+03	4.30E-05	0	2.77E-02	0	0	0	0	0	0	0	0	0
Kr85	N_Gas	NONE	NONE	3.93E+02	2.05E-09	0	4.40E-04	0	0	0	0	0	0	0	0	0
Kr87	N_Gas	NONE	NONE	1.30E+04	1.51E-04	0	1.52E-01	0	0	0	0	0	0	0	0	0
Kr88	N_Gas	NONE	NONE	1.83E+04	6.78E-05	0	5.01E-01	0	0	0	8.36E+01	0	0	0	0	0
Kr89	N_Gas	NONE	NONE	2.22E+04	3.63E-03	0	3.23E-01	0	0	0	0	0	0	0	0	0
Xe131m	N_Gas	NONE	NONE	3.04E+02	6.74E-07	0	1.44E-03	0	0	0	0	0	0	0	0	0
Xe133m	N_Gas	NONE	NONE	1.63E+03	3.67E-06	0	5.07E-03	0	0	0	0	0	0	0	0	0
Xe133	N_Gas	I133Part	NONE	5.27E+04	1.53E-06	0	5.77E-03	0	0	0	0	0	0	0	0	0
Xe135m	N_Gas	NONE	NONE	1.09E+04	7.56E-04	0	7.55E-02	0	0	0	0	0	0	0	0	0
Xe135	N_Gas	I135Part	NONE	1.91E+04	2.12E-05	0	4.40E-02	0	0	0	0	0	0	0	0	0
Xe137	N_Gas	NONE	NONE	4.80E+04	2.96E-03	0	3.03E-02	0	0	0	0	0	0	0	0	0
Xe138	N_Gas	NONE	NONE	4.50E+04	6.80E-04	0	2.13E-01	0	0	0	0	0	0	0	0	0
I131Org	Org_I	NONE	NONE	2.71E+04	9.98E-07	0	6.73E-02	0	0	0	3.29E+04	0	0	0	0	0
I132Org	Org_I	NONE	NONE	3.92E+04	8.37E-05	0	4.14E-01	0	0	0	3.81E+02	0	0	0	0	0
I133Org	Org_I	NONE	NONE	5.51E+04	9.26E-06	0	1.09E-01	0	0	0	5.85E+03	0	0	0	0	0
I134Org	Org_I	NONE	NONE	6.03E+04	2.20E-04	0	4.81E-01	0	0	0	1.31E+02	0	0	0	0	0
I135Org	Org_I	NONE	NONE	5.16E+04	2.91E-05	0	3.07E-01	0	0	0	1.23E+03	0	0	0	0	0
I131Elem	Elm_I	Te131m	NONE	2.71E+04	9.98E-07	0	6.73E-02	0	0	0	3.29E+04	0	0	0	0	0
I132Elem	Elm_I	Te132	NONE	3.92E+04	8.37E-05	0	4.14E-01	0	0	0	3.81E+02	0	0	0	0	0
I133Elem	Elm_I	NONE	NONE	5.51E+04	9.26E-06	0	1.09E-01	0	0	0	5.85E+03	0	0	0	0	0
I134Elem	Elm_I	NONE	NONE	6.03E+04	2.20E-04	0	4.81E-01	0	0	0	1.31E+02	0	0	0	0	0
I135Elem	Elm_I	NONE	NONE	5.16E+04	2.91E-05	0	3.07E-01	0	0	0	1.23E+03	0	0	0	0	0
I131Part	Prt_I	NONE	NONE	2.71E+04	9.98E-07	0	6.73E-02	0	0	0	3.29E+04	0	0	0	0	0
I132Part	Prt_I	NONE	NONE	3.92E+04	8.37E-05	0	4.14E-01	0	0	0	3.81E+02	0	0	0	0	0
I133Part	Prt_I	NONE	Xe133	5.51E+04	9.26E-06	0	1.09E-01	0	0	0	5.85E+03	0	0	0	0	0
I134Part	Prt_I	NONE	NONE	6.03E+04	2.20E-04	0	4.81E-01	0	0	0	1.31E+02	0	0	0	0	0
I135Part	Prt_I	NONE	Xe135	5.16E+04	2.91E-05	0	3.07E-01	0	0	0	1.23E+03	0	0	0	0	0
Rb86	CsGrp	NONE	NONE	7.29E+01	4.30E-07	0	1.78E-02	0	0	0	6.62E+03	0	0	0	0	0
Cs134	CsGrp	NONE	NONE	7.29E+03	1.07E-08	0	2.80E-01	0	0	0	4.63E+04	0	0	0	0	0

Project: Nine Mile Point Nuclear Station Unit: __2__ Disposition: ____

Originator/Date	Reviewer/Date	Calculation No.	Revision
H. Pustulka 5/29/2007	Check of Appendix D	H21C-103	0

Ref.

Cs136	CsGrp	NONE	NONE	2.28E+03	6.12E-07	0	3.92E-01	0	0	0	7.33E+03	0	0	0	0	0
Cs137	CsGrp	NONE	Ba137m	4.35E+03	7.32E-10	0	1.01E-01	0	0	0	3.19E+04	0	0	0	0	0
Sb127	TeGrp	NONE	Te127	3.01E+03	2.08E-06	0	1.23E-01	0	0	0	6.03E+03	0	0	0	0	0
Sb129	TeGrp	NONE	Te129	8.91E+03	4.46E-05	0	2.64E-01	0	0	0	6.44E+02	0	0	0	0	0
Te127m	TeGrp	NONE	NONE	4.05E+02	7.36E-08	0	5.44E-04	0	0	0	2.15E+04	0	0	0	0	0
Te127	TeGrp	Sb127	NONE	3.00E+03	2.06E-05	0	8.95E-04	0	0	0	3.18E+02	0	0	0	0	0
Te129m	TeGrp	NONE	NONE	1.30E+03	2.39E-07	0	1.23E-02	0	0	0	2.40E+04	0	0	0	0	0
Te129	TeGrp	Sb129	NONE	8.76E+03	1.66E-04	0	1.02E-02	0	0	0	7.73E+01	0	0	0	0	0
Te131m	TeGrp	NONE	I131Elem	3.97E+03	6.42E-06	0	2.76E-01	0	0	0	6.50E+03	0	0	0	0	0
Te132	TeGrp	NONE	I132Elem	3.85E+04	2.46E-06	0	3.81E-02	0	0	0	9.44E+03	0	0	0	0	0
Ba137m	BaGrp	Cs137	NONE	4.12E+03	4.53E-03	0	1.07E-01	0	0	0	0.00E+00	0	0	0	0	0
Ba139	BaGrp	NONE	NONE	4.89E+04	1.40E-04	0	8.03E-03	0	0	0	1.72E+02	0	0	0	0	0
Ba140	BaGrp	NONE	La140	4.71E+04	6.30E-07	0	3.17E-02	0	0	0	3.74E+03	0	0	0	0	0
Mo99	NMtls	NONE	Tc99m	5.13E+04	2.92E-06	0	2.69E-02	0	0	0	3.96E+03	0	0	0	0	0
Tc99m	NMtls	Mo99	NONE	4.49E+04	3.20E-05	0	2.18E-02	0	0	0	3.26E+01	0	0	0	0	0
Ru103	NMtls	NONE	NONE	4.29E+04	2.04E-07	0	8.33E-02	0	0	0	8.96E+03	0	0	0	0	0
Ru105	NMtls	NONE	Rh105	3.01E+04	4.34E-05	0	1.41E-01	0	0	0	4.55E+02	0	0	0	0	0
Ru106	NMtls	NONE	NONE	1.76E+04	2.18E-08	0	3.85E-02	0	0	0	4.77E+05	0	0	0	0	0
Rh105	NMtls	Ru105	NONE	2.84E+04	5.45E-06	0	1.38E-02	0	0	0	9.55E+02	0	0	0	0	0
Y90	LaGrp	Sr90	NONE	3.24E+03	3.01E-06	0	7.03E-04	0	0	0	8.44E+03	0	0	0	0	0
Y91	LaGrp	Sr91	NONE	3.18E+04	1.37E-07	0	9.62E-04	0	0	0	4.88E+04	0	0	0	0	0
Y92	LaGrp	Sr92	NONE	3.40E+04	5.44E-05	0	4.81E-02	0	0	0	7.81E+02	0	0	0	0	0
Y93	LaGrp	NONE	NONE	3.96E+04	1.91E-05	0	1.78E-02	0	0	0	2.15E+03	0	0	0	0	0
Zr95	LaGrp	NONE	Nb95	4.46E+04	1.25E-07	0	1.33E-01	0	0	0	2.36E+04	0	0	0	0	0
Zr97	LaGrp	NONE	NONE	4.51E+04	1.14E-05	0	1.64E-01	0	0	0	4.33E+03	0	0	0	0	0
Nb95	LaGrp	Zr95	NONE	4.48E+04	2.28E-07	0	1.38E-01	0	0	0	5.81E+03	0	0	0	0	0
La140	LaGrp	Ba140	NONE	5.12E+04	4.78E-06	0	4.33E-01	0	0	0	4.85E+03	0	0	0	0	0
La141	LaGrp	NONE	Ce141	4.45E+04	4.90E-05	0	8.84E-03	0	0	0	5.81E+02	0	0	0	0	0
La142	LaGrp	NONE	NONE	4.29E+04	1.25E-04	0	5.33E-01	0	0	0	2.53E+02	0	0	0	0	0
Pr143	LaGrp	Ce143	NONE	3.97E+04	5.92E-07	0	7.77E-05	0	0	0	8.10E+03	0	0	0	0	0
Nd147	LaGrp	NONE	NONE	1.80E+04	7.31E-07	0	2.29E-02	0	0	0	6.85E+03	0	0	0	0	0
Am241	LaGrp	NONE	NONE	7.48E+00	5.08E-11	0	3.03E-03	0	0	0	4.44E+08	0	0	0	0	0
Cm242	LaGrp	NONE	NONE	1.85E+03	4.93E-08	0	2.11E-05	0	0	0	1.73E+07	0	0	0	0	0
Cm244	LaGrp	NONE	NONE	1.23E+02	1.21E-09	0	1.82E-05	0	0	0	2.48E+08	0	0	0	0	0

Project: Nine Mile Point Nuclear Station Unit: __2__ Disposition: ____

Originator/Date	Reviewer/Date	Calculation No.	Revision
H. Pustulka 5/29/2007	Check of Appendix D	H21C-103	0

Ref.

Ce141	CeGrp	La141	NONE	4.47E+04	2.47E-07	0	1.27E-02	0	0	0	8.95E+03	0	0	0	0	0
Ce143	CeGrp	NONE	Pr143	4.11E+04	5.83E-06	0	4.77E-02	0	0	0	3.39E+03	0	0	0	0	0
Ce144	CeGrp	NONE	NONE	3.70E+04	2.82E-08	0	1.03E-02	0	0	0	3.74E+05	0	0	0	0	0
Np239	CeGrp	NONE	NONE	5.78E+05	3.41E-06	0	2.85E-02	0	0	0	2.51E+03	0	0	0	0	0
Pu238	CeGrp	NONE	NONE	1.45E+02	2.50E-10	0	1.81E-05	0	0	0	2.88E+08	0	0	0	0	0
Pu239	CeGrp	NONE	NONE	1.34E+01	9.13E-13	0	1.57E-05	0	0	0	3.08E+08	0	0	0	0	0
Pu240	CeGrp	NONE	NONE	1.89E+01	3.36E-12	0	1.76E-05	0	0	0	3.08E+08	0	0	0	0	0
Pu241	CeGrp	NONE	NONE	5.49E+03	1.53E-09	0	2.68E-07	0	0	0	4.96E+06	0	0	0	0	0
Sr89	SrGrp	NONE	NONE	2.45E+04	1.59E-07	0	2.86E-04	0	0	0	6.51E+03	0	0	0	0	0
Sr90	SrGrp	NONE	Y90	3.14E+03	7.54E-10	0	2.79E-05	0	0	0	2.39E+05	0	0	0	0	0
Sr91	SrGrp	NONE	Y91	3.10E+04	2.03E-05	0	1.82E-01	0	0	0	9.32E+03	0	0	0	0	0
Sr92	SrGrp	NONE	Y92	3.38E+04	7.10E-05	0	2.51E-01	0	0	0	6.29E+02	0	0	0	0	0

Ref.

Attachment E-2: STARDOSE Main Input File for Case 2

```
edit_time
0 0.001 0.5 1 1.23 1.5 2 3.23 4 8 12 24 36
end_edit_time

participating_isotopes
Kr83m  Kr85m  Kr85  Kr87  Kr88  Kr89
Xe131m Xe133m Xe133 Xe135m Xe135 Xe137 Xe138
I131Org I131Elem    I131Part
I132Org I132Elem    I132Part
I133Org I133Elem    I133Part
I134Org I134Elem    I134Part
I135Org I135Elem    I135Part
Rb86  Cs134  Cs136  Cs137
Sb127  Sb129  Te127m Te127  Te129m Te129  Te131m Te132
Ba137m Ba139  Ba140
Mo99  Tc99m  Ru103  Ru105  Ru106  Rh105
Y90  Y91  Y92  Y93  Zr95  Zr97  Nb95
La140  La141  La142  Pr143  Nd147  Am241  Cm242  Cm244
Ce141  Ce143  Ce144  Np239  Pu238  Pu239  Pu240  Pu241
Sr89  Sr90  Sr91  Sr92
end_participating_isotopes

core
thermal_power                    7321
elemental_iodine_frac      0.97
organic_iodine_frac        0.03
particulate_iodine_frac          0.0
release_frac
to_control_volume  SOURCE
Time     N_Gas   I_Grp   CsGrp    TeGrp    BaGrp  NMtls    CeGrp  LaGrp    SrGrp
0.001    1.756   1.693   1.987    0        0      0        0      0        0
720      0       0       0        0        0      0        0      0        0
end_to_control_volume
end_release_frac
end_core

control_volume
obj_type                         OBJ_CV
name                                    SOURCE
air_volume                              7.17e6
water_volume                     0
surface_area                     0
has_recirc_filter                false
end_control_volume

control_volume
```

ENGINEERING SERVICES	CALCULATION CONTINUATION SHEET	Page __E7__ (Next __E8____)

Project: Nine Mile Point Nuclear Station Unit: __2__ Disposition: ____

Originator/Date	Reviewer/Date	Calculation No.	Revision
H. Pustulka 5/29/2007	Check of Appendix D	H21C-103	0

Ref.

```
obj_type                    OBJ_CV
name                                CONDENSER
air_volume                          97000
water_volume                0
surface_area                0
has_recirc_filter           false
end_control_volume

control_volume
obj_type            OBJ_CR
name                Control_Room
air_volume           202000
water_volume          0
surface_area          0
has_recirc_filter           false
breathing_rate
Time (hr)    Value (cms)
720          0.00035
end_breathing_rate

occupancy_factor
Time (hr)  Value (frac)
24                1
96                0.6
720      0.4
end_occupancy_factor
end_control_volume

junction
junction_type               AIR_JUNCTION
downstream_location         AIR_SPACE
upstream                    CORE
downstream                          SOURCE
has_filter                  false
flow_rate
Time     (hr)     Value    (cfm)
720               1
end_flow_rate
end_junction

junction
junction_type               AIR_JUNCTION
downstream_location         AIR_SPACE
upstream                    SOURCE
downstream                          CONDENSER
has_filter                  true
flow_rate
Time     (hr)     Value    (cfm)
24                14680
```

Ref.

```
720                 0
end_flow_rate

filter_efficiency
Time    NobleGas        Elemlodine      Orglodine       Partlodine      Solubles  Insolubles
720     0       0.9     0.9     0.9     0.99    0.99
end_filter_efficiency
frac_4_daughter_resusp
Time    NobleGas        Elemlodine      Orglodine       Partlodine      Solubles  Insolubles
720     1       1       0       0       0       0
end_frac_4_daughter_resusp

end_junction

junction
junction_type                           AIR_JUNCTION
downstream_location                     AIR_SPACE
upstream                                CONDENSER
downstream                                      environment
has_filter                              true
flow_rate
Time    (hr)    Value   (cfm)
24              5000
720             0
end_flow_rate

filter_efficiency
Time    NobleGas        Elemlodine      Orglodine       Partlodine      Solubles  Insolubles
720     0       0.9     0.9     0.9     0.99    0.99
end_filter_efficiency
frac_4_daughter_resusp
Time    NobleGas        Elemlodine      Orglodine       Partlodine      Solubles  Insolubles
720     1       1       0       0       0       0
end_frac_4_daughter_resusp

X_over_Q_4_site_boundary
Time    (hr)    Value   (s/m*3)
0.3     0.0
2.3     2.96e-5
720     0.0
end_X_over_Q_4_site_boundary
X_over_Q_4_low_population_zone
Time    (hr)    Value   (s/m*3)
8       1.42e-5
720     0.0
end_X_over_Q_4_low_population_zone
X_over_Q_4_ctrl_room
Time    (hr)    Value   (s/m*3)
0.3     4.48E-5
```

ENGINEERING SERVICES	CALCULATION CONTINUATION SHEET	Page __E9__ (Next __E10___)

Project: Nine Mile Point Nuclear Station Unit: __2__ Disposition: ____

Originator/Date	Reviewer/Date	Calculation No.	Revision
H. Pustulka 5/29/2007	Check of Appendix D	H21C-103	0

Ref.

```
2.3     8.03E-5
8       4.48E-5
24      1.68E-5
96      1.20E-5
720     8.83E-6
end_X_over_Q_4_ctrl_room
end_junction

junction
junction_type                   AIR_JUNCTION
downstream_location             AIR_SPACE
upstream                        environment
downstream                              Control_Room
has_filter                      true
flow_rate
Time    (hr)    Value   (cfm)
720     1e6
end_flow_rate
filter_efficiency
Time    NobleGas        ElemIodine      OrgIodine       PartIodine      Solubles  Insolubles
720     0       0       0       0       0       0
end_filter_efficiency
frac_4_daughter_resusp
Time    NobleGas        ElemIodine      OrgIodine       PartIodine      Solubles  Insolubles
720     0       0       0       0       0       0
end_frac_4_daughter_resusp
end_junction

junction
junction_type           AIR_JUNCTION
downstream_location         AIR_SPACE
upstream                Control_Room
downstream               environment
has_filter              false
flow_rate
Time (hr)  Value (cfm)
720     1e6
end_flow_rate
X_over_Q_4_ctrl_room
Time (hr)  Value (s/m*3)
720     0
end_X_over_Q_4_ctrl_room
X_over_Q_4_site_boundary
Time (hr)  Value (s/m*3)
720     0
end_X_over_Q_4_site_boundary
X_over_Q_4_low_population_zone
Time (hr)  Value (s/m*3)
720     0
```

ENGINEERING SERVICES	CALCULATION CONTINUATION SHEET	Page __E10__ (Next __E11___)

Project: Nine Mile Point Nuclear Station Unit: __2__ Disposition: ____

Originator/Date	Reviewer/Date	Calculation No.	Revision
H. Pustulka 5/29/2007	Check of Appendix D	H21C-103	0

Ref.

```
end_X_over_Q_4_low_population_zone
end_junction

environment
breathing_rate_sb
Time (hr)   Value (cms)
8                   0.00035
720     0.0
end_breathing_rate_sb
breathing_rate_lpz
Time (hr)   Value (cms)
8                   0.00035
24                  0.00018
720     0.00023
end_breathing_rate_lpz
end_environment
```

Ref.

Attachment E-3: STARDOSE Results for Case 2 (Excerpts)

```
edit time 2.000000

             air_space
Kr83m        6.37E+002
Kr85m        2.08E+003
Kr85         1.63E+002
Kr87         1.82E+003
Kr88         4.66E+003


edit time 36.000000

Control_Room

             thyroid    wbody      skin       CEDE
Total dose:  0.00E+000  1.80E-001  0.00E+000  2.24E+000
Noble gas    0.00E+000  1.72E-001  0.00E+000  1.28E-001
Org iodine   0.00E+000  2.35E-004  0.00E+000  6.31E-002
Elem iodine  0.00E+000  7.61E-003  0.00E+000  2.04E+000
Part iodine  0.00E+000  0.00E+000  0.00E+000  0.00E+000
Cesium       0.00E+000  1.04E-005  0.00E+000  1.01E-002
Tellurium    0.00E+000  0.00E+000  0.00E+000  0.00E+000
Barium       0.00E+000  1.44E-006  0.00E+000  0.00E+000
Noble metal  0.00E+000  0.00E+000  0.00E+000  0.00E+000
Lanthanides  0.00E+000  0.00E+000  0.00E+000  0.00E+000
Cerium       0.00E+000  0.00E+000  0.00E+000  0.00E+000
Strontinum   0.00E+000  0.00E+000  0.00E+000  0.00E+000

environment

            thyroid    wbody      skin       CEDE
EAB dose:   0.00E+000  7.93E-001  0.00E+000  3.60E-001
LPZ dose:   0.00E+000  7.48E-001  0.00E+000  4.89E-001

STARDOSE 1.01 (c) 1996-2002 Polestar Applied Technology, Inc.
Thu May 24 22:24:27 2007

Total elapsed hours: 0, mins: 0, secs: 2
```

ATTACHMENT 1: DESIGN VERIFICATION REPORT

Document being design-verified: ☐ DCP ☒ Calc ☐ Spec ☐ NER ☐ DBD ☐ Other

Doc#, Rev and Title: H21C103, Revision 0 : U2 CRDA, AST Methodology

Extent of Design Verification (Briefly describe):
This calculation was design verified by 1) validating all input with respect to the input database and with the AST CRDA calculation for Unit 1 (as appropriate), making sure that the appropriate input values were used; 2) assuring that all assumptions are conservative and conform to the Reg.Guide 1.183 AST requirements; 3) validating the calculation methodology and calculation tools (i.e. spreadsheet for Case 1, MicroShield 7 for the Main Steam Line Radiation Monitor Response to a reference activity concentration, and RADTRAD for Case 2) as being acceptable for the task; and 4) validating final results to make sure that they are as expected.

Method of Design Verification:

☒ Design Review ☐ Qualification Testing
☒ Alternate Calculations ☐ Applicability of Proven Design

Results of Design Verification:

☒ Fully acceptable with no issues identified
☐ Fully acceptable based on the following issues identified and resolved:

All input were appropriate and all assumptions valid (no further validation of assumptions are required). The calculation methodologies were appropriate for the task. All calculated values conform to as expected results. The calculation made several assumptions which simplified the analysis, and also added significant conservatism. Among these conservatisms is the control room being essentially open to the environment, so that no Habitability Zone protections were taken into account (such as filtration, delayed inflow, etc.). Minor issues were commented upon and corrected prior to final draft of the calculation..

☐ Continuation Page Follows

Discipline Involvement and Approvals:

	Name	Signature	Date
Lead Design Verifier:	H. Pustulka	Heather Pustulka	5/29/07
Discipline Design Verifiers, if required:			
MicroShield	J. Metcalf	[illegible]	5/29/07
RADTRAD	M. Berg	Mark C. Berg	5/29/07
RADTRAD	H. Pusulka	Heather Pustulka	5/29/07
Discipline	Name	Signature	Date

H21C-163, Rev. 00

ATTACHMENT 2: DESIGN VERIFICATION CHECKLIST

The following questions are required to be addressed based on the Nine Mile Point commitment to NQA-1 (1983) for design verification activities. This checklist is intended to assist when using the Design Review method of design verification to ensure relevant items are addressed in the verification effort. Each "No" answer will require correction or resolution by the originator of the document being verified prior to full acceptance by the design verifier(s).

Doc #: H21C103

Lead Design Verifiers Name: H. Pustulka

Items Addressed with Basis of Review Answer	Review Check		
	Yes	No	N/A
1. Were the inputs correctly selected ?	X		
2. Are assumptions necessary to perform the design activity adequately described and reasonable ? Where necessary, are the assumptions identified for subsequent re-verifications when the detailed activities are completed ?	X		
3. Was an appropriate design method used?	X		
4. Were the design inputs correctly incorporated into the design ?	X		
5. Is the design output reasonable compared to design inputs ?	X		
6. Are the necessary design input and verification requirements for interfacing organizations specified in the design documents or in supporting procedures or instructions ?			X