FuelSolutions™ Storage System
Final Safety Analysis Report

Revision 4
April 2007

Document No. WSNF-220
Docket No. 72-1026

Prepared by:

Energy*Solutions* Spent Fuel Division, Inc.

Campbell, California

©2007 Energy*Solutions* Spent Fuel Division, Inc.
All Rights Reserved

This page intentionally left blank.

TABLE OF CONTENTS

Section **Title** **Page**

1. GENERAL DESCRIPTION 1-1
1.1 Introduction 1.1-1
1.2 General Descriptions 1.2-1
1.2.1 FuelSolutions™ Storage System Characteristics 1.2-2
1.2.1.1 FuelSolutions™ W150 Storage Cask 1.2-2
1.2.1.2 FuelSolutions™ W100 Transfer Cask 1.2-7
1.2.1.3 FuelSolutions™ Canisters 1.2-11
1.2.1.4 FuelSolutions™ Support Equipment 1.2-12
1.2.2 Operational Features 1.2-22
1.2.2.1 Canister Loading 1.2-24
1.2.2.2 Canister Closure/Opening 1.2-24
1.2.2.3 Canister Horizontal Transfer 1.2-26
1.2.2.4 Canister Vertical Transfer 1.2-27
1.2.2.5 Storage 1.2-28
1.2.2.6 Transportation Cask Loading 1.2-28
1.2.2.7 Consideration of Human Error 1.2-29
1.2.3 FuelSolutions™ Storage System Contents 1.2-29
1.3 Identification of Agents and Contractors 1.3-1
1.4 On-Site Storage Array Configurations 1.4-1
1.5 Supplemental Data 1.5-1
1.5.1 Drawings 1.5-1
1.5.1.1 W150 Storage Cask 1.5-1
1.5.1.2 W100 Transfer Cask 1.5-3
1.5.1.3 W150 Storage Cask Impact Limiter 1.5-5
1.5.2 Product Literature 1.5-7
1.5.2.1 Storage Cask Impact Limiter Polyurethane Foam 1.5-7
1.5.2.2 Transfer Cask Neutron Shield Paint 1.5-9

TABLE OF CONTENTS (continued)

Section	Title	Page
2.	**PRINCIPAL DESIGN CRITERIA**	**2-1**
2.1	Structures, Systems, and Components Important to Safety	2.1-1
2.1.1	Identification of Quality Items	2.1-1
2.1.1.1	Important to Safety Items	2.1-1
2.1.1.2	Safety-Related Items	2.1-1
2.1.2	Design Bases and Criteria	2.1-1
2.1.2.1	Storage Cask	2.1-1
2.1.2.2	Transfer Cask	2.1-4
2.2	Spent Fuel to be Stored	2.2-1
2.3	Design Loadings	2.3-1
2.3.1	Normal Conditions	2.3-3
2.3.1.1	Normal Ambient Conditions for the ISFSI	2.3-3
2.3.1.2	Ambient Conditions for the Fuel Building	2.3-4
2.3.1.3	Fuel Rod Rupture	2.3-4
2.3.1.4	Pressure	2.3-4
2.3.1.5	Dead Load	2.3-4
2.3.1.6	Live Load	2.3-4
2.3.1.7	Handling Loads	2.3-5
2.3.1.8	Testing Loads	2.3-6
2.3.2	Off-Normal Conditions	2.3-6
2.3.2.1	Extreme Ambient Conditions	2.3-6
2.3.2.2	Fuel Rod Rupture	2.3-7
2.3.2.3	Internal Pressure	2.3-7
2.3.2.4	Misaligned Cask for Horizontal Transfer	2.3-7
2.3.2.5	Blockage of Storage Cask Air Inlet Vents	2.3-7
2.3.2.6	Hydraulic Ram Failure During Horizontal Transfer	2.3-8
2.3.3	Accident Conditions	2.3-8
2.3.3.1	Accident Thermal Conditions	2.3-8
2.3.3.2	Cask Drop	2.3-9

TABLE OF CONTENTS (continued)

Section	Title	Page
	2.3.3.3 Storage Cask Tip-over	2.3-10
	2.3.3.4 Fire	2.3-10
	2.3.3.5 Fuel Rod Rupture	2.3-11
	2.3.3.6 Internal Pressure	2.3-11
	2.3.3.7 Leakage of the Confinement Boundary	2.3-11
	2.3.3.8 Explosive Overpressure	2.3-11
	2.3.4 Natural Phenomena	2.3-11
	2.3.4.1 Flooding	2.3-11
	2.3.4.2 Tornado	2.3-13
	2.3.4.3 Tornado Missiles	2.3-14
	2.3.4.4 Earthquake	2.3-15
	2.3.4.5 Wind	2.3-16
	2.3.4.6 Burial Under Debris	2.3-16
	2.3.4.7 Lightning	2.3-16
	2.3.4.8 Snow and Ice	2.3-16
	2.3.4.9 Volcanism	2.3-17
	2.3.4.10 Site-Specific Conditions	2.3-18
	2.3.5 Load Combination Criteria	2.3-18
	2.3.5.1 Storage Cask	2.3-18
	2.3.5.2 Transfer Cask	2.3-18
2.4	Safety Protection Systems	2.4-1
	2.4.1 General	2.4-1
	2.4.2 Protection by Multiple Confinement Barriers and Systems	2.4-1
	2.4.2.1 Confinement Barriers and Systems	2.4-1
	2.4.2.2 Passive Cooling	2.4-1
	2.4.3 Protection by Equipment and Instrumentation Selection	2.4-2
	2.4.3.1 Support Equipment	2.4-2
	2.4.3.2 Instrumentation	2.4-2
	2.4.4 Nuclear Criticality Safety	2.4-2

TABLE OF CONTENTS (continued)

Section	Title	Page
	2.4.4.1 Control Methods for Prevention of Criticality	2.4-2
	2.4.4.2 Error Contingency Criteria	2.4-2
	2.4.4.3 Verification Analyses	2.4-3
	2.4.5 Radiological Protection	2.4-3
	2.4.6 Fire and Explosion Protection	2.4-3
2.5	Decommissioning	2.5-1
2.6	Supplemental Information	2.6-1
	2.6.1 ACI Code Compliance	2.6-1
	2.6.2 ASME Code Compliance	2.6-1
	2.6.3 Evaluation of Credibility of Non-Mechanistic Storage Cask Tip-over Accident	2.6-17
	2.6.3.1 Evaluation Basis	2.6-17
	2.6.3.2 Deterministic Evaluation	2.6-19
	2.6.3.3 Probabilistic Evaluation	2.6-23
	2.6.3.4 Evaluation of Radiological Consequences	2.6-25
	2.6.3.5 ISFSI Pad Requirements	2.6-31
	2.6.3.6 Summary	2.6-32
3.	**STRUCTURAL EVALUATION**	**3-1**
3.1	Structural Design	3.1-1
	3.1.1 Discussion	3.1-1
	3.1.1.1 Storage Cask	3.1-1
	3.1.1.2 Transfer Cask	3.1-2
	3.1.2 Design Criteria	3.1-3
	3.1.2.1 Storage Cask	3.1-3
	3.1.2.2 Transfer Cask	3.1-5
3.2	Weights and Centers of Gravity	3.2-1
3.3	Mechanical Properties of Materials	3.3-1
	3.3.1 Storage Cask	3.3-1
	3.3.2 Transfer Cask	3.3-1

TABLE OF CONTENTS (continued)

Section	Title	Page
3.4	General Standards for Casks	3.4-1
3.4.1	Chemical and Galvanic Reactions	3.4-1
3.4.1.1	Storage Cask	3.4-1
3.4.1.2	Transfer Cask	3.4-1
3.4.2	Positive Closure	3.4-2
3.4.3	Lifting Devices	3.4-2
3.4.3.1	Storage Cask	3.4-2
3.4.3.2	Transfer Cask	3.4-3
3.4.4	Storage and Transfer Cask Service Life	3.4-5
3.4.4.1	Storage Cask	3.4-5
3.4.4.2	Transfer Cask	3.4-6
3.5	Evaluation of Normal Condition Loadings	3.5-1
3.5.1	Summary of Pressures and Temperatures	3.5-1
3.5.2	Differential Thermal Expansion	3.5-1
3.5.3	Stress Calculations	3.5-3
3.5.3.1	Storage Cask	3.5-3
3.5.3.2	Storage Cask Impact Limiter Surface Under Normal Dead and Live Loads	3.5-8
3.5.3.3	Transfer Cask	3.5-8
3.5.4	Cold Ambient Conditions	3.5-17
3.6	Evaluation of Off-Normal Conditions	3.6-1
3.6.1	Off-Normal Temperature and Insolation Loadings	3.6-1
3.6.1.1	Storage Cask	3.6-1
3.6.1.2	Transfer Cask	3.6-1
3.6.2	Wind Load	3.6-1
3.6.2.1	Storage Cask	3.6-1
3.6.2.2	Transfer Cask	3.6-1
3.6.3	Cask Misalignment or Interference	3.6-2
3.6.3.1	Storage Cask	3.6-2

TABLE OF CONTENTS (continued)

Section	Title	Page
	3.6.3.2 Transfer Cask	3.6-3
	3.6.4 Hydraulic Ram Failure During Horizontal Transfer	3.6-3
	3.6.5 Off-Normal Load Combinations	3.6-3
3.7	Evaluation of Accident Conditions	3.7-1
	3.7.1 Fully Blocked Storage Cask Inlet and Outlet Vents	3.7-1
	3.7.2 Loss of Transfer Cask Neutron Shielding	3.7-1
	3.7.3 Storage Cask End Drop	3.7-2
	3.7.3.1 Determination of End Drop Loads	3.7-2
	3.7.3.2 Structural Evaluation of the Storage Cask	3.7-5
	3.7.4 Storage Cask Tip-Over	3.7-6
	3.7.4.1 Determination of Tip-Over Load	3.7-6
	3.7.4.2 Structural Evaluation of the Storage Cask	3.7-8
	3.7.5 Transfer Cask Side Drop	3.7-9
	3.7.5.1 Determination of Side Drop Loads	3.7-9
	3.7.5.2 Structural Evaluation of the Transfer Cask	3.7-10
	3.7.6 Fire	3.7-11
	3.7.7 Explosive Overpressure	3.7-12
	3.7.8 Flood	3.7-13
	3.7.9 Tornado	3.7-14
	3.7.9.1 Storage Cask	3.7-14
	3.7.9.2 Transfer Cask	3.7-17
	3.7.10 Earthquake	3.7-20
	3.7.10.1 Storage Cask	3.7-20
	3.7.10.2 Transfer Cask	3.7-23
	3.7.11 Accident Condition Load Combinations	3.7-24
3.8	Supplemental Data	3.8-1
	3.8.1 End and Side Drop Analysis Methodology Validation	3.8-1
	3.8.1.1 Assumptions and Methodology	3.8-1
	3.8.1.2 Evaluation of Finite Element Results	3.8-3

TABLE OF CONTENTS (continued)

Section	Title	Page
	3.8.1.3 Summary of Finite Element Results	3.8-4
3.9	Fuel Rods	3.9-1
4.	**THERMAL EVALUATION**	**4-1**
4.1	Discussion	4.1-1
	4.1.1 Design Features	4.1-1
	4.1.1.1 Storage Cask	4.1-2
	4.1.1.2 Transfer Cask	4.1-3
	4.1.2 Design Basis Ambient Conditions	4.1-4
	4.1.3 Bounding Axial Heat Generation Profile	4.1-6
	4.1.3.1 Development of Bounding Axial Heat Generation Profiles	4.1-6
	4.1.3.2 Application of Axial Heat Generation Profiles for Cask Analysis	4.1-8
	4.1.4 Thermal Operating Modes	4.1-9
	4.1.4.1 Storage Cask	4.1-9
	4.1.4.2 Transfer Cask	4.1-10
	4.1.5 Thermal Rating Summary	4.1-11
4.2	Summary of Thermal Properties of Materials	4.2-1
4.3	Specifications for Components	4.3-1
	4.3.1 Storage Cask	4.3-1
	4.3.2 Transfer Cask	4.3-2
4.4	Thermal Evaluation for Normal Conditions of Storage	4.4-1
	4.4.1 Storage Cask	4.4-1
	4.4.1.1 Thermal Model	4.4-2
	4.4.1.2 Thermal Ratings	4.4-12
	4.4.1.3 Maximum Temperatures	4.4-13
	4.4.1.4 Minimum Temperatures	4.4-13
	4.4.1.5 Maximum Thermal Stresses	4.4-13
	4.4.1.6 Evaluation of Storage Cask Performance for Normal Conditions	4.4-14

TABLE OF CONTENTS (continued)

Section	Title	Page
4.4.2	Transfer Cask	4.4-30
4.4.2.1	Thermal Model	4.4-31
4.4.2.2	Thermal Ratings	4.4-39
4.4.2.3	Maximum Temperatures	4.4-39
4.4.2.4	Minimum Temperatures	4.4-40
4.4.2.5	Maximum Pressure	4.4-40
4.4.2.6	Maximum Thermal Stresses	4.4-40
4.4.2.7	Evaluation of Transfer Cask Performance for Normal Conditions	4.4-41
4.5	Thermal Evaluation for Off-Normal Conditions of Storage	4.5-1
4.5.1	Storage Cask	4.5-1
4.5.1.1	Thermal Model	4.5-1
4.5.1.2	Maximum Temperatures	4.5-2
4.5.1.3	Minimum Temperatures	4.5-4
4.5.1.4	Maximum Thermal Stresses	4.5-4
4.5.1.5	Evaluation of Storage Cask Performance for Off-Normal Conditions	4.5-4
4.5.2	Transfer Cask	4.5-14
4.5.2.1	Thermal Model	4.5-14
4.5.2.2	Maximum Temperatures	4.5-14
4.5.2.3	Minimum Temperatures	4.5-14
4.5.2.4	Maximum Internal Pressures	4.5-15
4.5.2.5	Maximum Thermal Stresses	4.5-15
4.5.2.6	Evaluation of Transfer Cask Performance for Off-Normal Conditions	4.5-15
4.6	Thermal Evaluation for Accident Conditions of Storage	4.6-1
4.6.1	Storage Cask	4.6-1
4.6.1.1	Thermal Model	4.6-1
4.6.1.2	Maximum Temperatures	4.6-4
4.6.1.3	Minimum Temperatures	4.6-6

TABLE OF CONTENTS (continued)

Section	Title	Page
	4.6.1.4 Maximum Thermal Stresses	4.6-6
	4.6.1.5 Evaluation of Storage Cask Performance for Accident Conditions	4.6-6
	4.6.2 Transfer Cask	4.6-17
	4.6.2.1 Thermal Model	4.6-17
	4.6.2.2 Maximum Temperatures	4.6-18
	4.6.2.3 Minimum Temperatures	4.6-19
	4.6.2.4 Maximum Internal Pressures	4.6-19
	4.6.2.5 Maximum Thermal Stresses	4.6-19
	4.6.2.6 Evaluation of Transfer Cask Performance for Accident Conditions	4.6-19
4.7	Supplemental Data	4.7-1
	4.7.1 SINDA/FLUINT® Computer Code Description	4.7-1
5.	**SHIELDING EVALUATION**	**5-1**
5.1	Discussion and Results	5.1-1
	5.1.1 Storage Cask	5.1-2
	5.1.2 Transfer Cask	5.1-3
	5.1.3 Adjustments to Storage and Transfer Cask Dose Rates	5.1-3
5.2	Source Specification	5.2-1
	5.2.1 Method of Source Specification	5.2-1
	5.2.1.1 Fuel Cooling Tables	5.2-1
	5.2.1.2 Construction of the Fuel Cooling Tables	5.2-1
	5.2.1.3 Special Considerations for Fuel Cooling Tables	5.2-4
	5.2.2 Source Term Calculations	5.2-7
	5.2.2.1 Fuel Source Parameters for Forward Calculations	5.2-8
	5.2.2.2 Gamma Source Terms for Forward Cases	5.2-9
	5.2.2.3 Neutron Source Terms for Forward Cases	5.2-12
	5.2.2.4 Thermal Source Term Calculations	5.2-15
5.3	Model Specification	5.3-1

TABLE OF CONTENTS (continued)

Section	Title	Page
5.3.1	Description of the Radial and Axial Shielding Configurations	5.3-1
5.3.2	Storage Cask	5.3-1
5.3.2.1	Storage Cask DORT Adjoint Models	5.3-2
5.3.2.2	Storage Cask DORT Forward Models	5.3-3
5.3.2.3	Storage Cask MCNP Forward Models	5.3-4
5.3.2.4	Storage Cask Array MCNP Forward Models	5.3-5
5.3.3	Transfer Cask	5.3-6
5.3.4	Shield Regional Densities	5.3-8
5.4	Shielding Evaluation	5.4-1
5.4.1	Storage Cask	5.4-1
5.4.1.1	Storage Cask DORT Adjoint Models	5.4-1
5.4.1.2	Storage Cask DORT Forward Models	5.4-2
5.4.1.3	Storage Cask MCNP Forward Models	5.4-3
5.4.2	Transfer Cask	5.4-6
5.4.3	Storage Cask Array Analyses	5.4-8
5.5	Supplemental Data	5.5-1
5.5.1	Flux to Dose Conversion Factors	5.5-1
5.5.2	Computer Code Descriptions	5.5-4
5.5.2.1	ORIGEN2.1	5.5-4
5.5.2.2	DORT	5.5-4
5.5.2.3	MCNP4B	5.5-6
5.5.2.4	Automated Calculation Program	5.5-6
5.5.3	Calculation of Assembly Hardware Gamma Source Strengths	5.5-7
5.5.4	Summary of DORT Adjoint Shielding Calculation Methodology	5.5-19
5.5.5	Example Computer Code Input Files	5.5-30
5.5.6	Calculation of Dose Rate Adjustment Factors	5.5-52
5.5.6.1	Shielding Model Geometry	5.5-52
5.5.6.2	Shielding Analysis Source Terms	5.5-53
5.5.6.3	Shielding Calculation Results	5.5-55

TABLE OF CONTENTS (continued)

Section **Title** **Page**

6. CRITICALITY EVALUATION 6-1
6.1 Discussion and Results 6.1-1
6.2 Spent Fuel Loading 6.2-1
6.3 Model Specification 6.3-1
6.4 Criticality Evaluation 6.4-1
6.5 Criticality Benchmark Experiments 6.5-1
6.6 Supplemental Data 6.6-1

7. CONFINEMENT 7-1
7.1 Confinement Boundary 7.1-1
7.2 Requirements for Normal and Off-Normal Conditions of Storage 7.2-1
7.3 Confinement Requirements for Hypothetical Accident Conditions 7.3-1
7.4 Supplemental Data 7.4-1
7.4.1 Atmospheric Release Calculation Supporting Data 7.4-1
7.4.1.1 Nuclides with Potential for Release 7.4-1
7.4.1.2 Fraction Available for Release 7.4-2
7.4.1.3 Fraction of Fuel Rods Breached 7.4-2
7.4.1.4 Atmospheric Dispersion 7.4-2
7.4.1.5 Dose Conversion Factors 7.4-2
7.4.1.6 Event Duration and Occupancy Factor 7.4-3
7.4.1.7 Canister Release Fraction 7.4-3
7.4.1.8 Dose Calculations 7.4-3

8. OPERATING PROCEDURES 8-1
8.1 Procedures for Loading the Cask in the Spent Fuel Pool 8.1-1
8.1.1 Stage Canister and Transfer Cask 8.1-1
8.1.1.1 Preparation of a Canister for Fuel Loading 8.1-1
8.1.1.2 Staging of Transfer Cask 8.1-2
8.1.2 Insert Canister into Transfer Cask 8.1-2
8.1.3 Place Canister and Transfer Cask into Fuel Pool 8.1-3

TABLE OF CONTENTS (continued)

Section	Title	Page
8.1.4	Load Fuel into Canister	8.1-4
8.1.5	Remove Loaded Cask/Canister from Fuel Pool	8.1-5
8.1.6	Decontaminate Cask Exterior	8.1-6
8.1.7	Install Canister Inner Closure Plate	8.1-7
8.1.8	Drain and Backfill Canister with Helium	8.1-9
8.1.9	Install Canister Outer Closure Plate	8.1-11
8.1.10	Transfer Canister from Transfer Cask to Storage Cask (Horizontally)	8.1-12
8.1.10.1	Install Transfer Cask Top Cover	8.1-12
8.1.10.2	Downend Transfer Cask on Horizontal Transfer Trailer	8.1-13
8.1.10.3	Tow Transfer Cask to ISFSI	8.1-13
8.1.10.4	Stage Empty Storage Cask	8.1-14
8.1.10.5	Align and Dock Transfer Cask with Storage Cask	8.1-14
8.1.10.6	Transfer the Canister to the Storage Cask	8.1-15
8.1.10.7	Upend Storage Cask and Position Cask on ISFSI Pad	8.1-16
8.1.11	Transfer Canister from Transfer Cask to Storage Cask (Vertical)	8.1-17
8.1.11.1	Prepare Transfer Cask and Canister	8.1-18
8.1.11.2	Move Transfer Cask to the Storage Cask	8.1-18
8.1.11.3	Insert Canister into Storage Cask	8.1-19
8.1.11.4	Tow Storage Cask to ISFSI	8.1-20
8.2	Procedures for Unloading the Storage Cask	8.2-1
8.2.1	Canister Retrieval Using Horizontal Canister Transfer	8.2-1
8.2.1.1	Prepare Loaded Storage Cask	8.2-1
8.2.1.2	Align and Dock Transfer Cask with Storage Cask	8.2-2
8.2.1.3	Transfer Canister to Transfer Cask	8.2-3
8.2.1.4	Prepare Transfer Cask for On-Site Transport	8.2-4
8.2.1.5	Move Transfer Cask and Canister to Cask Decontamination Area	8.2-5
8.2.2	Canister Retrieval Using Vertical Canister Transfer	8.2-5
8.2.2.1	Transport Storage Cask to Cask Receiving Bay	8.2-6

TABLE OF CONTENTS (continued)

Section	Title	Page
	8.2.2.2 Prepare Transfer Cask	8.2-6
	8.2.2.3 Prepare Storage Cask and Canister	8.2-7
	8.2.2.4 Dock Transfer Cask with Storage Cask and Retrieve Canister	8.2-7
	8.2.2.5 Move Canister and Transfer Cask to Cask Decontamination Area	8.2-8
8.2.3	Canister Opening and Unloading of Fuel	8.2-9
	8.2.3.1 Prepare Canister for Vent and Fill	8.2-9
	8.2.3.2 Vent and Fill Canister with Water	8.2-10
	8.2.3.3 Remove the Canister Inner and Outer Closure Plates	8.2-11
	8.2.3.4 Place Transfer Cask and Canister into Fuel Pool	8.2-12
	8.2.3.5 Remove Fuel from Canister	8.2-13
	8.2.3.6 Remove Empty Canister from Fuel Pool	8.2-14
	8.2.3.7 Ready Empty Canister	8.2-15
8.2.4	Horizontal Canister Transfer from a Storage Cask to a Transportation Cask	8.2-15
	8.2.4.1 Prepare Loaded Storage Cask	8.2-16
	8.2.4.2 Transfer Canister to Transportation Cask	8.2-18
	8.2.4.3 Ready Transportation Cask for Off-Site Transport	8.2-18
8.2.5	Horizontal Canister Transfer from a Transfer Cask to a Transportation Cask	8.2-19
	8.2.5.1 Stage Transportation Cask	8.2-19
	8.2.5.2 Align and Dock Transfer Cask with Transportation Cask	8.2-20
	8.2.5.3 Transfer Canister to Transportation Cask	8.2-21
	8.2.5.4 Ready Transportation Cask for Off-Site Transport	8.2-21
8.2.6	Vertical Canister Transfer from Transfer Cask to Transportation Cask	8.2-22
	8.2.6.1 Stage Transportation Cask	8.2-22
	8.2.6.2 Prepare Transfer Cask and Canister	8.2-23
	8.2.6.3 Move Transfer Cask to Transportation Cask	8.2-23
	8.2.6.4 Transfer Canister to Transportation Cask	8.2-24
	8.2.6.5 Downend Transportation Cask on Horizontal Transfer Trailer	8.2-24

TABLE OF CONTENTS (continued)

Section **Title** **Page**

8.3 Preparation of the Cask 8.3-1
8.3.1 Preparation of Transfer Cask for Canister Loading 8.3-1
8.3.2 Preparation of a Storage Cask for Canister Loading 8.3-1
8.3.2.1 Preparation for Horizontal Canister Transfer 8.3-2
8.3.2.2 Preparation for Vertical Canister Transfer 8.3-2

9. ACCEPTANCE CRITERIA AND MAINTENANCE PROGRAM 9-1
9.1 Acceptance Criteria 9.1-1
9.1.1 Canisters 9.1-1
9.1.2 Storage Cask 9.1-1
9.1.2.1 Visual Inspection and Nondestructive Examination 9.1-5
9.1.2.2 Structural 9.1-6
9.1.2.3 Leak Tests 9.1-7
9.1.2.4 Criticality Safety 9.1-7
9.1.2.5 Shielding Integrity 9.1-7
9.1.2.6 Thermal Acceptance 9.1-7
9.1.2.7 Components 9.1-8
9.1.3 Transfer Cask 9.1-9
9.1.3.1 Visual Inspection and Nondestructive Examination 9.1-9
9.1.3.2 Structural 9.1-14
9.1.3.3 Leak Tests 9.1-14
9.1.3.4 Criticality Safety 9.1-14
9.1.3.5 Shielding Integrity 9.1-14
9.1.3.6 Thermal Acceptance 9.1-15
9.1.3.7 Components 9.1-15
9.1.4 Storage Cask Impact Limiters 9.1-17
9.1.4.1 Visual Inspection and Nondestructive Examination 9.1-17
9.1.4.2 Structural 9.1-18
9.1.4.3 Leak Tests 9.1-18

TABLE OF CONTENTS (continued)

Section	Title	Page
	9.1.4.4 Criticality Safety	9.1-18
	9.1.4.5 Shielding Integrity	9.1-18
	9.1.4.6 Thermal Acceptance	9.1-18
	9.1.4.7 Components	9.1-18
9.2	Maintenance Program	9.2-1
	9.2.1 Canisters	9.2-1
	9.2.2 Storage Cask	9.2-1
	9.2.3 Transfer Cask	9.2-4
	9.2.4 Storage Cask Impact Limiter	9.2-5
9.3	First Cask In Use Requirements	9.3-1
10.	**RADIATION PROTECTION**	**10-1**
10.1	Ensuring that Occupational Radiation Exposures Are As Low As Is Reasonably Achievable (ALARA)	10.1-1
	10.1.1 Policy Considerations	10.1-1
	10.1.2 Design Considerations	10.1-1
	10.1.3 Operational Considerations	10.1-3
	10.1.3.1 FuelSolutions™ Storage Cask	10.1-4
	10.1.3.2 FuelSolutions™ Transfer Cask	10.1-6
10.2	Radiation Protection Design Features	10.2-1
	10.2.1 FuelSolutions™ Canisters	10.2-1
	10.2.2 FuelSolutions™ Storage Cask	10.2-1
	10.2.3 FuelSolutions™ Transfer Cask	10.2-2
10.3	Estimated On-Site Collective Dose Assessment	10.3-1
10.4	Estimated Off-Site Collective Dose Assessment	10.4-1
	10.4.1 Off-Site Dose for Normal Operations	10.4-2
	10.4.2 Off-Site Dose for Off-Normal Conditions	10.4-2
	10.4.3 Off-Site Dose for Accident Conditions	10.4-3
11.	**ACCIDENT ANALYSES**	**11-1**

TABLE OF CONTENTS (continued)

Section	Title	Page
11.1	Off-Normal Operations	11.1-1
11.1.1	Off-Normal Temperature and Insolation Loadings	11.1-1
11.1.1.1	Postulated Cause of the Event	11.1-1
11.1.1.2	Detection of the Event	11.1-2
11.1.1.3	Summary of Event Consequences and Regulatory Compliance	11.1-2
11.1.1.4	Corrective Actions	11.1-3
11.1.2	Cask Misalignment or Interference	11.1-3
11.1.2.1	Postulated Cause of the Event	11.1-3
11.1.2.2	Detection of the Event	11.1-4
11.1.2.3	Summary of Event Consequences and Regulatory Compliance	11.1-4
11.1.2.4	Corrective Actions	11.1-6
11.1.3	Hydraulic Ram Failure During Horizontal Transfer	11.1-6
11.1.3.1	Postulated Cause of the Event	11.1-6
11.1.3.2	Detection of the Event	11.1-7
11.1.3.3	Summary of Event Consequences and Regulatory Compliance	11.1-7
11.1.3.4	Corrective Action	11.1-8
11.1.4	Off-Normal Load Combinations	11.1-8
11.2	Accidents	11.2-1
11.2.1	Fully Blocked Storage Cask Inlet and Outlet Vents	11.2-1
11.2.1.1	Postulated Cause of the Event	11.2-2
11.2.1.2	Detection of the Event	11.2-2
11.2.1.3	Summary of Event Consequences and Regulatory Compliance	11.2-2
11.2.1.4	Corrective Action	11.2-3
11.2.2	Storage Cask Drop	11.2-3
11.2.2.1	Postulated Cause of the Event	11.2-3
11.2.2.2	Detection of the Event	11.2-3

TABLE OF CONTENTS (continued)

Section	Title	Page
	11.2.2.3 Summary of Event Consequences and Regulatory Compliance	11.2-4
	11.2.2.4 Corrective Action	11.2-5
	11.2.3 Storage Cask Tip-over on J-Skid	11.2-5
	11.2.3.1 Postulated Cause of the Event	11.2-5
	11.2.3.2 Detection of the Event	11.2-5
	11.2.3.3 Summary of Event Consequences and Regulatory Compliance	11.2-5
	11.2.3.4 Corrective Action	11.2-6
	11.2.4 Transfer Cask Drop	11.2-7
	11.2.4.1 Postulated Cause of the Event	11.2-7
	11.2.4.2 Detection of the Event	11.2-7
	11.2.4.3 Summary of Event Consequences and Regulatory Compliance	11.2-7
	11.2.4.4 Corrective Actions	11.2-8
	11.2.5 Fire	11.2-9
	11.2.5.1 Postulated Cause of the Event	11.2-9
	11.2.5.2 Detection of the Event	11.2-9
	11.2.5.3 Summary of Event Consequences and Regulatory Compliance	11.2-9
	11.2.5.4 Corrective Action	11.2-11
	11.2.6 Explosive Overpressure	11.2-11
	11.2.7 Flood	11.2-11
	11.2.7.1 Postulated Cause of the Event	11.2-11
	11.2.7.2 Detection of the Event	11.2-12
	11.2.7.3 Summary of Event Consequences and Regulatory Compliance	11.2-12
	11.2.7.4 Corrective Action	11.2-13
	11.2.8 Tornado	11.2-13
	11.2.8.1 Postulated Cause of the Event	11.2-13
	11.2.8.2 Detection of the Event	11.2-13

TABLE OF CONTENTS (continued)

Section **Title** **Page**

11.2.8.3 Summary of Event Consequences and Regulatory Compliance 11.2-13
11.2.8.4 Corrective Actions 11.2-14
11.2.9 Earthquake 11.2-15
11.2.9.1 Postulated Cause of the Event 11.2-15
11.2.9.2 Detection of the Event 11.2-15
11.2.9.3 Summary of Event Consequences and Regulatory Compliance 11.2-15
11.2.9.4 Corrective Actions 11.2-16
11.2.10 Accident Condition Load Combinations 11.2-16

12. OPERATING CONTROLS AND LIMITS 12-1
12.1 Proposed Operating Controls and Limits 12.1-1
12.2 Development of Operating Controls and Limits 12.2-1
12.3 Supplemental Data 12.3-1
12.3.1 Technical Specifications and Bases for the FuelSolutions™ Storage System 12.3-1

13. QUALITY ASSURANCE 13-1

14. DECOMMISSIONING 14-1
14.1 Activation Analysis 14.1-1
14.1.1 Storage Cask Activation 14.1-1
14.1.2 Transfer Cask Activation 14.1-2
14.1.3 Canister Activation 14.1-3
14.2 Decommissioning Approach 14.2-1
14.3 Disposal of Residual Radioactive Materials 14.3-1

LIST OF TABLES

Section **Title** **Page**

Table 1.0-1 - FuelSolutions™ Storage System FSAR Regulatory Compliance Cross-Reference Matrix (16 pages) 1-9
Table 1.2-1 - Principal Characteristics of the FuelSolutions™ Storage and Transfer Casks 1.2-31
Table 2.0-1 - Transfer Cask Design Criteria Summary (5 Pages) 2-2
Table 2.0-2 - Storage Cask Design Criteria Summary (5 Pages) 2-7
Table 2.1-1 - Quality Classifications of the FuelSolutions™ Storage System Components and Support Equipment 2.1-7
Table 2.3-1 - Summary of Maximum Historical Annual Average Temperatures at Domestic Power Reactor Sites 2.3-20
Table 2.3-2 - Insolation Loads(1,2) 2.3-21
Table 2.3-3 - Fuel Building Ambient Conditions 2.3-21
Table 2.3-4 - Tornado Loading Characteristics 2.3-22
Table 2.3-5 - Tornado-Generated Missiles 2.3-22
Table 2.3-6 - Storage Cask Load Combinations - Reinforced Concrete Components(1) 2.3-23
Table 2.3-7 - Storage Cask Load Combinations - Structural Steel Components(1) 2.3-24
Table 2.3-8 - Transfer Cask Load Combinations(1,2) 2.3-25
Table 2.6-1 - FuelSolutions™ W150 Storage Cask ACI Code Requirement Compliance Summary (6 Pages) 2.6-2
Table 2.6-2 - FuelSolutions™ W100 Transfer Cask ASME Code Requirement Compliance Summary (9 Pages) 2.6-8
Table 2.6-3 - Radionuclides Considered in Atmospheric Release Calculations 2.6-33
Table 2.6-4 - Radionuclide Fractions Released from Fuel Assemblies into Canister 2.6-33
Table 2.6-5 - Radionuclide Release Fractions from Canister into Atmosphere 2.6-34
Table 2.6-6 - Atmospheric Dispersion Factors 2.6-34
Table 2.6-7 - Exposure-to-Dose and Exposure-to-Dose-Rate Conversion Factors 2.6-35
Table 3.1-1 - Storage Cask and Transfer Cask Component Functions and Design Codes 3.1-8
Table 3.1-2 - Storage Cask Concrete Stress and Section Allowables 3.1-9
Table 3.1-3 - Evaluation of Storage Cask Concrete Reinforcement Ratios 3.1-10
Table 3.1-4 - Storage Cask Structural Steel Allowable Stresses 3.1-11
Table 3.1-5 - Transfer Cask Allowable Stresses 3.1-12
Table 3.2-1 - Storage Cask Weights and Centers of Gravity 3.2-2
Table 3.2-2 - Transfer Cask Under-the-Hook Weights 3.2-3
Table 3.2-3 - Transfer Cask Dry Weights and Centers of Gravity 3.2-3
Table 3.3-1 - Summary of Storage Cask Materials of Construction 3.3-3
Table 3.3-2 - Storage Cask Structural Steel Mechanical Properties of Materials(1) 3.3-4
Table 3.3-3 - Mechanical Properties of Storage Cask Reinforced Concrete 3.3-5
Table 3.3-4 - Summary of Transfer Cask Materials of Construction 3.3-6
Table 3.3-5 - Transfer Cask Structural Material Properties 3.3-7
Table 3.3-6 - Transfer Cask Shielding Material Properties 3.3-8
Table 3.3-7 - Type 304 Stainless Steel Elastic-Plastic Properties for Transfer Cask Plastic Instability Analysis 3.3-9
Table 3.3-8 - Dynamic Elastic-Plastic Properties for Transfer Cask Lead(1) 3.3-10
Table 3.4-1 - Transfer Cask Lifting Trunnion Stresses 3.4-8
Table 3.5-1 - Storage and Transfer Cask Temperatures for Thermal Expansion Evaluation 3.5-19

LIST OF TABLES (continued)

Section **Title** **Page**

Table 3.5-2 - Storage Cask Reinforced Concrete Evaluation Summary for Normal Load Combinations 3.5-20
Table 3.5-3 - Storage Cask Structural Steel Component Evaluation Summary for Normal Load Combinations 3.5-21
Table 3.5-4 - Transfer Cask Shell Stress Summary for Horizontal Dead Weight 3.5-22
Table 3.5-5 - Trunnion Lifting and Handling Design Loads 3.5-23
Table 3.5-6 - Transfer Cask Shell Lifting and Handling Stresses 3.5-24
Table 3.5-7 - Summary of Transfer Cask Maximum Stresses for Normal Conditions 3.5-25
Table 3.5-8 - Transfer Cask Normal Operating Condition Load Combinations 3.5-26
Table 3.6-1 - Transfer Cask Stresses for Off-Normal Conditions 3.6-4
Table 3.6-2 - Storage Cask Reinforced Concrete Evaluation Summary for Off-Normal Load Combination 3.6-5
Table 3.6-3 - Storage Cask Steel Component Evaluation Summary for Off-Normal Load Combinations 3.6-6
Table 3.6-4 - Transfer Cask Off-Normal Load Combination Results 3.6-7
Table 3.7-1 - Storage Cask End Drop Finite Element Model Material Properties 3.7-26
Table 3.7-2 - ISFSI Concrete Pad Material Properties(1) 3.7-27
Table 3.7-3 - Summary of Storage Cask End Drop Analysis Results 3.7-28
Table 3.7-4 - Storage Cask Impact Limiter Foam Dynamic Stress-Strain Data for Tip-Over Analysis 3.7-29
Table 3.7-5 - Storage Cask Reinforced Concrete Evaluation Summary for Accident Load Combinations (3 Pages) 3.7-30
Table 3.7-6 - Storage Cask Steel Component Evaluation Summary for Accident Load Combinations (3 Pages) 3.7-33
Table 3.7-7 - Transfer Cask Side Drop Finite Element Model Material Properties 3.7-36
Table 3.7-8 - Transfer Cask Stresses for Accident Conditions 3.7-37
Table 3.7-9 - Transfer Cask Accident Load Combination Results 3.7-38
Table 3.8-1 - Steel Billet Finite Element Model Material Properties Used in Benchmark Analysis 3.8-5
Table 3.8-2 - Comparison of Billet Drop Analysis and Test Results 3.8-5
Table 4.1-1 - FuelSolutions™ W150 Storage Cask Operating Modes 4.1-12
Table 4.1-2 - FuelSolutions™ W100 Transfer Cask Operating Modes 4.1-13
Table 4.1-3 - Storage Cask Design Basis Load Cases 4.1-14
Table 4.1-4 - Transfer Cask Design Basis Load Cases 4.1-15
Table 4.1-5 - Storage and Transfer Cask Thermal Ratings 4.1-15
Table 4.2-1 - Homogenous Material Properties (2 pages) 4.2-2
Table 4.2-2 - Surface Emissivities 4.2-5
Table 4.2-3 - Material Properties, Fluids 4.2-6
Table 4.3-1 - Storage Cask Allowable Material Temperatures 4.3-5
Table 4.3-2 - Transfer Cask Allowable Material Temperatures 4.3-5
Table 4.4-1 - Storage Cask SIDE Submodel Axial Node Location 4.4-15
Table 4.4-2 - Storage Cask Top Section Submodel Node Locations(1) 4.4-16
Table 4.4-3 - Storage Cask Bottom Section Submodel Node Locations(1) 4.4-16
Table 4.4-4 - Storage Cask Thermal Rating 4.4-17
Table 4.4-5 - Storage Cask Normal System Temperatures at Q_{max}=28 kW 4.4-17

LIST OF TABLES (continued)

Section **Title** **Page**

Table 4.4-6 - Storage Cask Normal System Temperatures at $LHGR_{max}$=0.253 kW/in....4.4-18
Table 4.4-7 - Storage Cask Maximum Temperatures at Q_{max}=28 kW for Normal Conditions(1)....4.4-19
Table 4.4-8 - Storage Cask Maximum Temperatures at $LHGR_{max}$=0.253 kW/in for Normal Conditions(1,2)....4.4-19
Table 4.4-9 - Transfer Cask Thermal Ratings....4.4-42
Table 4.4-10 - Transfer Cask Normal System Temperatures at Q_{max}=28 kW (1)....4.4-43
Table 4.4-11 - Transfer Cask Maximum Material Temperatures for Normal Conditions (1,2)....4.4-44
Table 4.5-1 - Storage Cask Off-Normal System Temperatures at Q_{max} (28.0 kW)(1)....4.5-6
Table 4.5-2 - Storage Cask Maximum Temperatures at Q_{max} for Off-Normal Ambient Conditions(1,2)....4.5-7
Table 4.5-3 - Storage Cask Off-Normal System Temperatures at $LHGR_{max}$ (0.253 kW)(1)....4.5-8
Table 4.5-4 - Storage Cask Maximum Temperatures at $LHGR_{max}$ for Off-Normal Conditions(1,2)....4.5-9
Table 4.5-5 - Transfer Cask Off-Normal System Temperatures(1)....4.5-16
Table 4.5-6 - Transfer Cask Maximum Material Temperatures for Off-Normal Conditions(1)....4.5-17
Table 4.6-1 - Storage Cask System Temperatures for Accident Conditions(1)....4.6-8
Table 4.6-2 - Storage Cask Maximum Temperatures for Accident Conditions....4.6-9
Table 4.6-3 - Maximum Storage Cask Temperatures for Reduced Cask Heat Load All Vents Blocked Accident Condition....4.6-10
Table 4.6-4 - Transfer Cask Temperatures for Accident Conditions(1)....4.6-20
Table 4.6-5 - Transfer Cask Maximum Material Temperatures for Loss of Neutron Shield Accident(1,2)....4.6-21
Table 4.6-6 - Transfer Cask Maximum Material Temperatures for Fire Accident(1)....4.6-22
Table 5.1-1 - Estimated Storage Cask Dose Rates....5.1-6
Table 5.1-2 - Estimated Transfer Cask Dose Rates....5.1-7
Table 5.1-3 - Adjustments to Bounding Transfer Cask Dose Rates....5.1-8
Table 5.2-1 - PWR Source Term Calculation Input Parameters....5.2-16
Table 5.2-2 - BWR Source Term Calculation Input Parameters....5.2-17
Table 5.2-3 - Summary of Gamma Sources....5.2-18
Table 5.2-4 - Gamma Energy Group Transfer Function....5.2-19
Table 5.2-5 - Bounding Case Fuel Region Gamma Source Description for Forward Shielding Calculations....5.2-20
Table 5.2-6 - Typical Case Fuel Region Gamma Source Description for Forward Shielding Calculations....5.2-21
Table 5.2-7 - Assembly Non-Fuel Region Gamma Source Strengths....5.2-22
Table 5.2-8 - Summary of Neutron Sources....5.2-23
Table 5.2-9 - Neutron Spectra....5.2-24
Table 5.2-10 - Bounding Case Fuel Region Neutron Source Description for Forward Shielding Calculations....5.2-25
Table 5.2-11 - Typical Case Fuel Region Neutron Source Description for Forward Shielding Calculations....5.2-26
Table 5.2-12 - Normalized Axial Gamma and Neutron Source Strength Profiles Used in Forward Shielding Analyses....5.2-27
Table 5.3-1 - Properties for Type 304 SS....5.3-9
Table 5.3-2 - Properties for Type 316 SS....5.3-9

LIST OF TABLES (continued)

Section **Title** **Page**

Table 5.3-3 - Properties for Borated SS 5.3-9
Table 5.3-4 - Properties for Inconel 718 ..... 5.3-10
Table 5.3-5 - Properties for Carbon Steel 5.3-10
Table 5.3-6 - Properties for Concrete(1) 5.3-10
Table 5.3-7 - Properties for NS-3 ..... 5.3-11
Table 5.3-8 - Properties for Depleted Uranium 5.3-11
Table 5.3-9 - Properties for Lead 5.3-11
Table 5.3-10 - Properties for UO_2 ..... 5.3-12
Table 5.3-11 - Properties for Zircaloy 5.3-12
Table 5.3-12 - Properties for Boral® (core) 5.3-12
Table 5.3-13 - Properties for Boral® (clad) 5.3-12
Table 5.3-14 - Properties for Water 5.3-13
Table 5.3-15 - Properties for Air 5.3-13
Table 5.3-16 - Earth, ρ=2.000 g/cm3 ..... 5.3-13
Table 5.3-17 - Properties for RX-277 ..... 5.3-14
Table 5.3-18 - W21 Canister Unique Mixtures(1) 5.3-15
Table 5.5-1 - Gamma Flux to Dose Rate Conversion Factors 5.5-2
Table 5.5-2 - Neutron Flux to Dose Rate Conversion Factors 5.5-3
Table 5.5-3 - Minimum "Realistic" Enrichment vs. Burnup Level 5.5-12
Table 5.5-4 - Core Region ^{60}Co Activation Levels for PWR and BWR Fuel at Assembly Discharge (t=0) 5.5-12
Table 5.5-5 - PWR Assembly Core Region Hardware Gamma Source Strength Percentage (vs. total fuel source strength) 1.5 % Enrichment Case - 50 grams/assembly of Core Region Cobalt 5.5-13
Table 5.5-6 - PWR Assembly Core Region Hardware Gamma Source Strength Percentage (vs. total fuel source strength) Minimum "Realistic" Enrichments Case - 50 grams/assembly of Core Region Cobalt 5.5-14
Table 5.5-7 - BWR Assembly Core Region Hardware Gamma Source Strength Percentage (vs. total fuel source strength) 1.5% Enrichment Case - 4 grams/assembly of Core Region Cobalt 5.5-15
Table 5.5-8 - BWR Assembly Core Region Hardware Gamma Source Strength Percentage (vs. total fuel source strength) Minimum "Realistic" Enrichments Case - 4 grams/assembly of Core Region Cobalt 5.5-16
Table 5.5-9 - Assembly Hardware ^{60}Co Gamma Source Strength Percentage Function - "F(T)" 5.5-17
Table 5.5-10 - Assembly Hardware Gamma Source Strength Percentage Burnup Adjustment Factors - "F(B)" 5.5-18
Table 5.5-11 - Photon Dose Rate Response Function Used as Adjoint Source 5.5-22
Table 5.5-12 - Neutron Dose Rate Response Function Used as Adjoint Source 5.5-23
Table 5.5-13 - Adjoint Functions Relating the Primary Photon Source to Side Surface Dose Rate 5.5-24
Table 5.5-14 - Adjoint Functions Relating the Neutron Induced Secondary Photon Source to Side Surface Dose Rate 5.5-25
Table 5.5-15 - Adjoint Functions Relating the Neutron Source to Side Surface Dose Rate 5.5-26
Table 5.5-16 - DORT Output for Photon Adjoint Calculation (2 pages) 5.5-27

LIST OF TABLES (continued)

Section **Title** **Page**

Table 5.5-17 - DORT Output for Neutron Adjoint Calculation....5.5-29
Table 5.5-18 - Summary of Canister Interior Material Volume Fractions....5.5-58
Table 5.5-19 - Final Fuel Region Radiation Source Strengths (particles/sec-canister)....5.5-59
Table 5.5-20 - Axial Gamma and Neutron Source Strength Profiles (design basis W21 case)....5.5-60
Table 5.5-21 - Axial Gamma and Neutron Source Strength Profiles (maximum burnup W21 case)....5.5-61
Table 5.5-22 - Axial Gamma and Neutron Source Strength Profiles (W74 case)....5.5-62
Table 5.5-23 - Assembly Non-Fuel Region Gamma Source Strengths....5.5-63
Table 5.5-24 - Comparison of Total Storage and Transfer Cask Gamma Dose Rates....5.5-64
Table 5.5-25 - Comparison of Total Storage and Transfer Cask Neutron Dose Rates....5.5-65
Table 5.5-26 - Gamma and Neutron Dose Ratios for Alternate Canisters and Fuel Payloads (vs. Design Basis W21 Case)[(1)]....5.5-66
Table 5.5-27 - Dose Rates (mR/hr) by Detector Location for Various Canister Types and Fuel Payloads....5.5-67
Table 7.4-1 - Radionuclides Considered in Atmospheric Release Calculations and Associated Release Fractions (2 pages)....7.4-5
Table 7.4-2 - Atmospheric Dispersion Factors....7.4-7
Table 7.4-3 - Exposure-to-Dose Conversion Factors (5 pages)....7.4-8
Table 7.4-4 - Exposure-to-Dose-Rate Conversion Factors (5 pages)....7.4-13
Table 8.0-1 - General Listing of Major Operating Equipment and Tools....8-4
Table 9.1-1 - FuelSolutions™ W150 Storage Cask Inspection and Test Acceptance Criteria (3 Pages)....9.1-2
Table 9.1-2 - FuelSolutions™ W100 Transfer Cask Inspection and Test Acceptance Criteria (3 Pages)....9.1-11
Table 9.1-3 - FuelSolutions™ W150 Storage Cask Impact Limiter Assembly Inspection and Test Acceptance Criteria....9.1-19
Table 9.2-1 - Maintenance Program for the FuelSolutions™ W150 Storage Cask....9.2-3
Table 9.2-2 - Maintenance Program for the FuelSolutions™ W100 Transfer Cask....9.2-6
Table 10.3-1 - Estimated Cumulative Occupational Exposure for Placing Fuel into Dry Storage Using Vertical Canister Transfer....10.3-3
Table 10.3-2 - Estimated Cumulative Occupational Exposure for Placing Fuel into Dry Storage Using Horizontal Canister Transfer....10.3-4
Table 10.3-3 - Estimated Cumulative Occupational Exposure for Retrieval of Fuel from Dry Storage Using Vertical Canister Transfer....10.3-5
Table 10.3-4 - Estimated Cumulative Occupational Exposure for Retrieval of Fuel from Dry Storage Using Horizontal Canister Transfer....10.3-6
Table 10.4-1 - Off-Site Direct Radiation Dose Rates - Single Cask....10.4-4
Table 10.4-2 - Off-Site Direct Radiation Dose Rates - 8x8 Array of Casks....10.4-5
Table 10.4-3 - Off-Site Normal Condition Dose Rates for a Single Cask....10.4-6
Table 10.4-4 - Off-Site Normal Condition Dose Rates for an 8x8 Array of Casks....10.4-7
Table 10.4-5 - Off-Site Off-Normal Condition Dose Rates for a Single Cask....10.4-8
Table 10.4-6 - Off-Site Off-Normal Condition Dose Rates for an 8x8 Array of Casks....10.4-9
Table 10.4-7 - Off-Site Accident Condition Dose Rates for a Single Cask....10.4-10
Table 10.4-8 - Off-Site Accident Condition Dose Rates for an 8x8 Array of Casks....10.4-11
Table 12.1-1 - Summary of FuelSolutions™ Storage System Operating Controls and Limits....12.1-2

LIST OF TABLES (continued)

Section **Title** **Page**

Table 13-1 - Quality Assurance Criteria Matrix 13-2
Table 14.1-1 - Estimated Storage Cask Activation - Metal Components 14.1-4
Table 14.1-2 - Estimated Storage Cask Activation - Concrete Components 14.1-5
Table 14.1-3 - Estimated Transfer Cask Activation 14.1-6
Table 14.1-4 - Estimated FuelSolutions™ Canister Components(1) Activation 14.1-7

LIST OF FIGURES

Figure **Title** **Page**

Figure 1.0-1 - FuelSolutions™ Spent Fuel Management System Elements 1-7
Figure 1.0-2 - FuelSolutions™ Storage System Certification Application Approach 1-8
Figure 1.2-1 - FuelSolutions™ Spent Fuel Management System 1.2-33
Figure 1.2-2 - FuelSolutions™ W150 Storage Cask 1.2-34
Figure 1.2-3 - Shielded Docking Collar 1.2-35
Figure 1.2-4 - Cask Restraints 1.2-36
Figure 1.2-5 - Cask/Canister Alignment Verification 1.2-37
Figure 1.2-6 - FuelSolutions™ W100 Transfer Cask 1.2-38
Figure 1.2-7 - Cask Cavity Axial Spacer 1.2-39
Figure 1.2-8 - Inflatable Annulus Seal 1.2-40
Figure 1.2-9 - Components and Equipment for Horizontal Canister Transfer 1.2-41
Figure 1.2-10 - Components and Equipment for Vertical Canister Transfer 1.2-42
Figure 1.2-11 - Components and Alternative Equipment for Vertical Canister Transfer 1.2-43
Figure 1.2-12 - Shield Plug Retainers 1.2-44
Figure 1.2-13 - Vacuum Drying System 1.2-45
Figure 1.2-14 - Inner Closure Plate Strongback 1.2-46
Figure 1.2-15 - Automated Welding and Opening System 1.2-47
Figure 1.2-16 - Horizontal Transfer Trailer 1.2-48
Figure 1.2-17 - Horizontal Transfer Skid 1.2-49
Figure 1.2-18 - Horizontal Transfer Skid with Trailer and Skid Positioning System 1.2-50
Figure 1.2-19 - Transfer Cask on Horizontal Transfer Skid and Trailer 1.2-51
Figure 1.2-20 - Hydraulic Ram System (2 pages) 1.2-52
Figure 1.2-21 - Upender/Downender - Four-Point Gantry Type 1.2-54
Figure 1.2-22 - Upender/Downender - Four-Point Gantry Rotation Sequence 1.2-55
Figure 1.2-23 - Horizontal Canister Transfer from Transfer Cask to Storage Cask 1.2-56
Figure 1.2-24 - Horizontal Canister Transfer from Storage Cask to Transfer Cask 1.2-57
Figure 1.2-25 - Horizontal Lid Handling Fixture 1.2-58
Figure 1.2-26 - Storage Cask Vertical Transporter 1.2-59
Figure 1.2-27 - Storage Cask Vertical Transport Trailer 1.2-60
Figure 1.2-28 - Storage Cask Movement with Air Pallets 1.2-61
Figure 1.2-29 - Canister Vertical Lift Fixture Operations (3 pages) 1.2-62
Figure 1.2-30 - Alternate Canister Vertical Lift Fixture Operations (3 pages) 1.2-65
Figure 1.2-31 - Swing-Arm Cask Lifting Yoke 1.2-68
Figure 1.2-32 - J-Hook Cask Lifting Yoke 1.2-69
Figure 1.2-33 - Empty Canister Lift Fixture 1.2-70
Figure 1.2-34 - Canister Loading and Closure Operations 1.2-71
Figure 1.2-35 - Canister Opening Operations 1.2-72
Figure 1.2-36 - Horizontal Canister Transfer Operations (2 pages) 1.2-73
Figure 1.2-37 - Vertical Canister Transfer Operations (2 pages) 1.2-75
Figure 1.2-38 - Canister Off-site Transportation Operations (2 pages) (Direct Method) 1.2-77
Figure 1.4-1 - Typical ISFSI Layout for Horizontal Canister Transfer* 1.4-2
Figure 1.4-2 - Typical ISFSI Layout for Vertical Canister Transfer* 1.4-3
Figure 2.3-1 - Storage Cask Postulated Drop Condition 2.3-26
Figure 2.6-1 - Storage Cask Seismic Tip-Over Analysis LS-DYNA Finite Element Model 2.6-36
Figure 2.6-2 - Rocking of Storage Cask for 0.70*g* PGA Earthquake 2.6-37
Figure 2.6-3 - Rocking of Storage Cask for 0.80*g* PGA Earthquake 2.6-38

LIST OF FIGURES (continued)

Figure **Title** **Page**

Figure 2.6-4 - Storage Cask Angular Rotation Time Histories for Bounding Earthquakes.....2.6-39
Figure 2.6-5 - Postulated Breached FuelSolutions™ PWR Canister Dose at the Site Boundary.....2.6-40
Figure 2.6-6 - Postulated Breached FuelSolutions™ BWR Canister Dose at the Site Boundary.....2.6-41
Figure 3.2-1 - Storage Cask Center of Gravity Diagrams.....3.2-4
Figure 3.2-2 - Transfer Cask Center of Gravity Diagrams for Dry Loaded Configuration.....3.2-5
Figure 3.3-1 - Type 304 Stainless Steel Elastic-Plastic Stress-Strain Curve for Transfer Cask Plastic Instability Analysis.....3.3-11
Figure 3.3-2 - Dynamic Elastic-Plastic Stress-Strain Curve for Transfer Cask Lead.....3.3-12
Figure 3.5-1 - ANSYS Finite Element Model of the FuelSolutions™ Storage Cask.....3.5-27
Figure 3.5-2 - Section Locations for Storage Cask Analysis.....3.5-28
Figure 3.5-3 - Transfer Cask Axisymmetric Finite Element Model.....3.5-29
Figure 3.5-4 - Transfer Cask Upper End Finite Element Model.....3.5-30
Figure 3.5-5 - Transfer Cask Lower End Finite Element Model.....3.5-31
Figure 3.5-6 - Transfer Cask Interface Points for Handling Loads.....3.5-32
Figure 3.7-1 - Storage Cask LS-DYNA Model for End Drop Load Calculation.....3.7-39
Figure 3.7-2 - Storage Cask LS-DYNA Model, Storage Cask Assembly Detail.....3.7-40
Figure 3.7-3 - Storage Cask Canister Support Pipes Upper and Lower Bound Force-Deflection Curves.....3.7-41
Figure 3.7-4 - Storage Cask End Drop Filtered and Unfiltered Acceleration Time-Histories (3'-0" Thick Pad with 10 ksi Soil Modulus).....3.7-42
Figure 3.7-5 - Canister Shell End Drop Filtered and Unfiltered Acceleration Time-Histories (3'-0" Thick Pad with 10 ksi Soil Modulus).....3.7-43
Figure 3.7-6 - Canister Basket End Drop Filtered and Unfiltered Acceleration Time-Histories (3'-0" Thick Pad with 10 ksi Soil Modulus).....3.7-44
Figure 3.7-7 - Storage Cask and J-skid Tip-Over Geometry.....3.7-45
Figure 3.7-8 - Acceleration Time-History for Storage Cask and J-skid Tip-Over (Upper Bound Load).....3.7-46
Figure 3.7-9 - Transfer Cask LS-DYNA Model for Side Drop *G*-Load Calculation.....3.7-47
Figure 3.7-10 - Transfer Cask LS-DYNA Model for Side Drop *G*-Load Calculation, Transfer Cask Assembly Detail.....3.7-48
Figure 3.7-11 - Transfer Cask Side Drop Filtered and Unfiltered Acceleration Time-Histories (2'-6" Thick Pad with 15 ksi Soil Modulus).....3.7-49
Figure 3.7-12 - Finite Element Model for Transfer Cask Side Drop Stress Analysis.....3.7-50
Figure 3.7-13 - Storage Cask Flood Loads.....3.7-51
Figure 3.7-14 - Storage Cask Overturning Due to Tornado Missile Loads.....3.7-52
Figure 3.7-15 - Transfer Cask Overturning Due to Tornado Missile Loads.....3.7-53
Figure 3.7-16 - Transfer Cask Tornado Loads and Reactions.....3.7-54
Figure 3.7-17 - Storage Cask Overturning Due to Seismic Loads.....3.7-55
Figure 3.7-18 - Storage Cask Overturning Due to Pad Failure.....3.7-56
Figure 3.7-19 - Transfer Cask Overturning Due to Pad Failure.....3.7-57
Figure 3.8-1 - Steel Billet End Drop LS-DYNA Finite Element Model (FEM).....3.8-6
Figure 3.8-2 - Steel Billet Side Drop and Tip-Over LS-DYNA Finite Element Model (FEM).....3.8-7
Figure 3.8-3 - Comparison of Fourier Spectrum for Billet 18" End Drop Test.....3.8-8
Figure 3.8-4 - Comparison of Fourier Spectrum for Billet 72" Side Drop Test.....3.8-9

LIST OF FIGURES (continued)

Figure **Title** **Page**

Figure 3.8-5 - Steel Billet 18" End Drop FEM Analysis Acceleration Time-History 3.8-10
Figure 3.8-6 - Steel Billet 18" Side Drop FEM Analysis Acceleration Time-History 3.8-11
Figure 3.8-7 - Steel Billet 36" Side Drop FEM Analysis Acceleration Time-History 3.8-12
Figure 3.8-8 - Steel Billet 72" Side Drop FEM Analysis Acceleration Time-History 3.8-13
Figure 3.8-9 - Steel Billet Tip-Over Drop FEM Analysis Acceleration Time-History 3.8-14
Figure 4.1-1 - Transfer Cask Annulus Recirculation 4.1-16
Figure 4.1-2 - Design Basis Axial Peaking Factors for PWR and BWR Fuels 4.1-17
Figure 4.1-3 - Max. Peaking Factor vs. Burnup for PWR Fuel 4.1-18
Figure 4.1-4 - Max. Peaking Factor vs. Burnup for BWR Fuel 4.1-18
Figure 4.1-5 - Design Basis Canister Axial Heat Generation Profiles 4.1-19
Figure 4.1-6 - Storage Cask Thermocouple Locations 4.1-20
Figure 4.1-7 - Transfer Cask Thermocouple Location 4.1-21
Figure 4.4-1 - Storage Cask Thermal Model, Normal Vertical 4.4-20
Figure 4.4-2 - Storage Cask SIDE Thermal Submodel 4.4-21
Figure 4.4-3 - Storage Cask SIDE Thermal Submodel - Sections 4.4-22
Figure 4.4-4 - Storage Cask CASKLID Thermal Submodel 4.4-23
Figure 4.4-5 - Storage Cask BASE Thermal Submodel 4.4-24
Figure 4.4-6 - Storage Cask Temperature Variation with Q_{max} 4.4-25
Figure 4.4-7 - Storage Cask Temperature Variation with $LHGR_{max}$ 4.4-25
Figure 4.4-8 - Storage Cask Temperature Points 4.4-26
Figure 4.4-9 - Storage Cask Radial Temperatures at Q_{max}=28 kW 4.4-27
Figure 4.4-10 - Storage Cask Radial Temperatures at $LHGR_{max}$=0.253 kW/in 4.4-27
Figure 4.4-11 - Storage Cask Axial Temperatures at Q_{max} =28 kW 4.4-28
Figure 4.4-12 - Storage Cask Axial Temperatures at the $LHGR_{max}$=0.253 kW/in 4.4-28
Figure 4.4-13 - Storage Cask Heat Balance 4.4-29
Figure 4.4-14 - Transfer Cask Side Wall Thermal Model 4.4-45
Figure 4.4-15 - Transfer Cask Top End Thermal Model 4.4-46
Figure 4.4-16 - Transfer Cask Top End Thermal Model, Lid Detail 4.4-46
Figure 4.4-17 - Transfer Cask Bottom End Thermal Model 4.4-47
Figure 4.4-18 - Transfer Cask Bottom End Thermal Model, Lid Detail 4.4-47
Figure 4.4-19 - Lead Gap Size Variation with Temperature 4.4-48
Figure 4.4-20 - Transfer Cask Temperature Points 4.4-49
Figure 4.4-21 - Transfer Cask Temperatures vs. Decay Heat Load for Q_{max} 4.4-50
Figure 4.4-22 - Transfer Cask Temperatures vs. Decay Heat Load for $LHGR_{max}$ 4.4-50
Figure 4.4-23 - Radial Temperature Distribution (Case 15, Q_{max}=28.0 kW) 4.4-51
Figure 4.4-24 - Axial Temperature Distribution (Case 15, Q_{max}=28.0 kW) 4.4-51
Figure 4.4-25 - Radial Temperature Distribution w/ Max. Gradient Profile (Case 15, $LHGR_{max}$=0.253 kW/in) 4.4-52
Figure 4.4-26 - Axial Temperature Distribution w/ Max. Gradient Profile (Case 15, $LHGR_{max}$=0.253 kW/in) 4.4-52
Figure 4.4-27 - Transfer Cask Heat Balance 4.4-53
Figure 4.5-1 - Storage Cask Horizontal Convection 4.5-10
Figure 4.5-2 - Storage Cask Off-Normal Radial Temperatures at Q_{max}=28.0 kW 4.5-11
Figure 4.5-3 - Storage Cask Off-Normal Axial Temperatures (Q_{max}=28 kW) 4.5-11
Figure 4.5-4 - Storage Cask Horizontal Unloading Transient Radial Temperatures ($LHGR_{max}$ - 0.253 kW/in, 41 hours) 4.5-12

LIST OF FIGURES (continued)

Figure **Title** **Page**

Figure 4.5-5 - Storage Cask Horizontal Axial Temperatures ($LHGR_{max}$ = 0.253 kW/in, 41 hrs) 4.5-12
Figure 4.5-6 - Horizontal Storage Cask Max. Surface Concrete Temperature Correlation to Thermocouples ($LHGR_{max}$=0.253kW/in) 4.5-13
Figure 4.5-7 - Radial Temperature Distribution (Case 17, 28 kW) 4.5-18
Figure 4.5-8 - Axial Temperature Distribution (Case 17, 28 kW) 4.5-18
Figure 4.5-9 - Transfer Cask and Canister Shell Axial Temperature Distributions (Case 16, 28 kW) 4.5-19
Figure 4.5-10 - Transient Thermal Response of Transfer Cask is Freezing Weather (Q_{max} = 0 kW) 4.5-19
Figure 4.6-1 - Storage Cask Thermal Model, All Vents Blocked Accident 4.6-11
Figure 4.6-2 - Storage Cask All Vents Blocked Accident Transient Radial Temperatures (Q_{max} = 28.0 kW, 41 hours) 4.6-12
Figure 4.6-3 - Storage Cask All Vents Blocked Accident Axial Temperatures (Q_{max} = 28 kW, 41 hrs) 4.6-12
Figure 4.6-4 - Storage Cask Concrete Temperature During All Vents Blocked Accident Transient (Q_{max} = 28.0 kW) 4.6-13
Figure 4.6-5 - Peak Concrete Temperature for Reduced Cask Heat Load All Vents Blocked Accident Conditions 4.6-14
Figure 4.6-6 - Storage Cask Transient Response During Total Engulfing Fire Event 4.6-15
Figure 4.6-7 - Storage Cask Radial Temperature Distribution During Total Engulfing Fire Event 4.6-15
Figure 4.6-8 - Storage Cask Transient Response During Inlet Vent Fire Event 4.6-16
Figure 4.6-9 - Storage Cask Radial Temperature Distribution During Inlet Vent Fire Event 4.6-16
Figure 4.6-10 - Radial Temperature Distribution (Case 18, 28 kW) 4.6-23
Figure 4.6-11 - Axial Temperature Distribution (Case 18, 28 kW) 4.6-23
Figure 4.6-12 - Transfer Cask Fire Transient Component Temperatures (t ≤ 160 minutes) 4.6-24
Figure 5.1-1 - FuelSolutions™ W150 Storage Cask Shielding Design Features 5.1-9
Figure 5.1-2 - FuelSolutions™ W100 Transfer Cask Shielding Design Features 5.1-10
Figure 5.1-3 - Transfer Cask Dose Rate Calculation Locations 5.1-11
Figure 5.2-1 - Fuel Cooling Table Preparation Flowchart 5.2-6
Figure 5.2-2 - Neutron Energy Spectrum for Transfer and Storage Cask Models 5.2-28
Figure 5.3-1 - Storage Cask Adjoint X-Y DORT Model (Representative W21 Canister Shown) 5.3-16
Figure 5.3-2 - Storage Cask MCNP Model 5.3-17
Figure 5.3-3 - Transfer Cask R-Z DORT Model 5.3-18
Figure 5.3-4 - Storage Cask R-Z DORT Model 5.3-19
Figure 5.4-1 - Storage Cask Side Wall Dose Rates 5.4-9
Figure 5.4-2 - Storage Cask Top Dose Rates 5.4-10
Figure 5.4-3 - Storage Cask Accident Dose Rates 5.4-11
Figure 5.4-4 - Transfer Cask Dose Rates (Case 2 - Cask Decontamination Configuration) 5.4-12
Figure 5.4-5 - Transfer Cask Dose Rates (Case 6 - Transfer Configuration) 5.4-13
Figure 5.4-6 - Canister Top Dose Rates (Closure Plate Welding Configurations) 5.4-14
Figure 5.5-1 - DORT R-Z Model Geometry for the W21 Canister in the W150 Storage Cask 5.5-68
Figure 5.5-2 - DORT R-Z Model Geometry for the W74 Canister in the W150 Storage Cask 5.5-69

LIST OF FIGURES (continued)

Figure **Title** **Page**

Figure 5.5-3 - DORT R-Z Model Geometry for the W21 Canister in the W100 Transfer Cask 5.5-70
Figure 5.5-4 - DORT R-Z Model Geometry for the W74 Canister in the W100 Transfer Cask 5.5-71
Figure 8.1-1 - Sequence for Loading a Canister 8.1-22
Figure 8.2-1 - Sequence for Retrieval of a Loaded Canister from a Storage Cask into a Transfer Cask - Horizontal Canister Transfer 8.2-26
Figure 8.2-2 - Sequence for Retrieval of a Loaded Canister from a Storage Cask into a Transfer Cask - Vertical Canister Transfer 8.2-27
Figure 8.2-3 - Sequence for Opening and Unloading Fuel 8.2-28
Figure 8.2-4 - Sequence for Transferring a Canister from a Storage Cask to a Transportation Cask - Horizontal Canister Transfer 8.2-29
Figure 8.2-5 - Sequence for Transferring a Canister from a Transfer Cask to a Transportation Cask - Horizontal Canister Transfer 8.2-30
Figure 8.2-6 - Sequence for Transferring a Canister from a Transfer Cask to a Transportation Cask - Vertical Canister Transfer 8.2-31
Figure 10.4-1 - Off-Site Direct Dose vs. Distance from a Single Cask 10.4-12
Figure 10.4-2 - Off-Site Direct Dose vs. Distance from an 8x8 Array of Casks 10.4-13

This page intentionally left blank.

ACRONYMS AND ABBREVIATIONS

ACI	American Concrete Institute
ACTL	Activation Library
AISC	American Institute of Steel Construction
ALARA	As Low As Reasonably Achievable
ANS	American Nuclear Society
ANSI	America National Standards Institute
ASCE	American Society of Civil Engineers
ASME	American Society of Mechanical Engineers
ASME Code	ASME B&PV Code
ASTM	American Society of Testing and Materials
AWS	American Welding Society
AW/OS	Automated Welding/Opening System
B&PV Code or BPVC	Boiler and Pressure Vessel Code
BRL	Ballistic Research Laboratory
BRP	Big Rock Point
BU	Burnup
BWR	Boiling Water Reactor
C of C	Certificate of Compliance
CE	Combustion Engineering
CFR	Code of Federal Regulation
CG	Center of Gravity
CGA	Compressed Gas Association
CISF	Centralized Interim Storage Facility
CMAA	Crane Manufacturers Association of America
CMTR	Certified Material Test Report
CNFD	Westinghouse Commercial Nuclear Fuel Division
CRUD	Chalk River Unidentified Deposits (debris/residues)
CRWMS	Civilian Radioactive Waste Management System
CS	Carbon Steel
DAR	Design Analysis Report
DBE	Design Basis Earthquake

ACRONYMS AND ABBREVIATIONS (continued)

DBT	Design Basis Tornado
DBW	Design Basis Wind
DCCG	Diffusion Controlled Cavity Growth
DFD	Design for Disassembly
DLF	Dynamic Load Factor
DM	Design Margins
DOE	U.S. Department of Energy
DU	Depleted Uranium
ENDF	Evaluated Nuclear Data File
ENDL	Evaluated Nuclear Data Library
EPRI	Electric Power Research Institute
ESBU	Westinghouse Energy Systems Business Unit
FSAR	Final Safety Analysis Report
FuelSolutions™ System	Energy*Solutions* Spent Fuel Management System (formerly referred to as the Wesflex™ System)
GE	General Electric
GTCC	Greater than Class C
GTSD	Westinghouse Government Technical Services Division
HAC	Hypothetical Accident Condition
HCN	United States Historical Climatology Network
HEPA	High Efficiency Particulate Air
HVAC	Heating, Ventilating, and Air Conditioning
IPEEE	Individual Plant Examination of External Events
ISFSI	Independent Spent Fuel Storage Installation
ISI	Inservice Inspection
ITS	Important to Safety
LLNL	Lawrence Livermore National Laboratory
LOCA	Loss-of-Coolant Accident
LSA	Low Specific Activity
LTP	Long-Term Performance
LWR	Light Water Reactor

ACRONYMS AND ABBREVIATIONS (continued)

MGDS	Mined Geological Disposal Site
MOX	Mixed Oxide
MPC	Multi-Purpose Canister
MRC	Material Review Committee
MRS	Monitored Retrievable Storage
MT	Magnetic Particle Examination
M&TE	Measuring and Testing Equipment/Instrumentation
NA or N/A	Not Applicable
NCT	Normal Conditions of Transport
NDE or NDT	Non-Destructive Examination or Testing
NDRC	National Defense Research Council
NFC	Non-fuel Components
NFPA	National Fire Protection Association
NIAC	Nuclear Industry Assessment Committee
NITS	Not Important to Safety
NLTP	Non-Long-Term Performance
NOAA	National Oceanographic and Atmospheric Agency
NP	Non-Proprietary
NPP	Nuclear Power Plant
NPT	National Pipe Thread
NRC	U.S. Nuclear Regulatory Commission
OCRWM	Office of Civilian Radioactive Waste Management
PC	Personal Computer
PT	Liquid Penetrant Examination
PWR	Pressurized Water Reactor
QA	Quality Assurance
QMS	Quality Management System
RC	Reinforced Concrete
RG	Regulatory Guide
RT	Radiographic Examination
SAE	Society of Automotive Engineers

ACRONYMS AND ABBREVIATIONS (continued)

SAR	Safety Analysis Report
SER	Safety Evaluation Report
SFMS	Spent Fuel Management System
SNF	Spent Nuclear Fuel
SRP	Standard Review Plan
SRSS	Square Root Sum of the Squares
SS	Stainless Steel
SSC	Structures, Systems, and Components
TEDE	Total Effective Dose Equivalent
TSC	Transportable Storage Canister
U.S.	United States
UT	Ultrasonic Examination
VDS	Vacuum Drying System
VT	Visual Inspection
WELCO	Westinghouse Electric Company
Wesflex™ System	Former name of the FuelSolutions™ System (any reference to Wesflex™ shall be taken to mean FuelSolutions™)
ZPA	Zero Period Acceleration

1. GENERAL DESCRIPTION

Overview

This Final Safety Analysis Report (FSAR) provides the technical basis for the design, fabrication, and operation of the FuelSolutions™ W150 Storage Cask and W100 Transfer Cask and serves to demonstrate compliance with the applicable requirements of 10CFR72.[1] The FuelSolutions™ W150 Storage Cask and W100 Transfer Cask are integral components of the FuelSolutions™ Spent Fuel Management System (SFMS). These storage and transfer casks, as described and analyzed in the subsequent chapters of this FSAR, are used to safely handle, transfer, and dry store canisterized spent nuclear fuel (SNF) on-site in an Independent Spent Fuel Storage Installation (ISFSI), in accordance with the requirements of 10CFR72.

The FuelSolutions™ SFMS is a fully integrated, canister-based system that provides for the storage and transport of a broad range of SNF assembly classes. The elements of the FuelSolutions™ SFMS are shown in Figure 1.0-1. The primary "Storage System" components of the FuelSolutions™ SFMS include the FuelSolutions™ storage cask and transfer cask, as described in this FSAR, and various FuelSolutions™ canisters described in their respective FuelSolutions™ Canister Storage FSARs. Taken together, these FSARs are intended to demonstrate compliance with the applicable portions of 10CFR72, Subpart L, for generic certification of the FuelSolutions™ Storage System. The organization of the FuelSolutions™ storage FSARs is shown schematically in Figure 1.0-2. This FSAR also provides a description of the FuelSolutions™ SFMS support equipment that interfaces with the storage cask, transfer cask, and canisters to facilitate canister loading, closure, and transfer operations.

The FuelSolutions™ storage cask, transfer cask (including the cask cavity spacer), and canisters (including any fuel assembly spacers) are classified as "important to safety" in accordance with 10CFR72, Subpart G. All other FuelSolutions™ Storage System support equipment, with the exception of the transfer cask lifting yoke(s), the canister vertical lift fixture, and the empty canister lift fixture, is classified as "not important to safety." Accordingly, safety analyses are provided in this FSAR only for the FuelSolutions™ storage cask and transfer cask. Safety analyses for the various FuelSolutions™ canisters are provided in the respective FuelSolutions™ Canister Storage FSARs. Safety analyses for the FuelSolutions™ transfer cask lifting yoke(s) and canister vertical lift fixture, which are classified as "safety-related," are not included in this FSAR or the FuelSolutions™ Canister Storage FSARs for generic certification under 10CFR72. These lifting devices are used exclusively within a 10CFR50[2] facility or other licensed fuel handling facility for which the safety analysis is performed in accordance with the requirements of 10CFR50.

By this FSAR and the companion FuelSolutions™ Canister Storage FSARs, generic certification of the FuelSolutions™ Storage System is sought by Energy*Solutions* Spent Fuel Division, Inc. (Energy*Solutions* SFD) in accordance with 10CFR72, Subpart L. Upon review and acceptance by

[1] Title 10, U.S. Code of Federal Regulations, Part 72 (10CFR72), *Licensing Requirements for the Independent Storage of Spent Nuclear Fuel and High-Level Radioactive Waste*, 1995.

[2] Title 10, U.S. Code of Federal Regulations, Part 50 (10CFR50), *Domestic Licensing of Production and Utilization Facilities*, 1995.

the U.S. Nuclear Regulatory Commission (NRC), the resulting Safety Evaluation Report (SER) and Certificate of Compliance (C of C) would include the FuelSolutions™ W150 Storage Cask and W100 Transfer Cask, in conjunction with reviewed and approved FuelSolutions™ canisters for on-site dry storage of SNF in an ISFSI. The then certified FuelSolutions™ Storage System may be implemented by the licensee in accordance with the general license provisions of 10CFR72, Subpart K. The NRC-approved FuelSolutions™ storage FSARs may also be used as a reference in site-specific license applications, in accordance with 10CFR72, Subpart B.

The generic design basis and the corresponding safety analysis of the FuelSolutions™ Storage System contained in this FSAR and the respective FuelSolutions™ Canister Storage FSARs are intended to bound the SNF characteristics, design conditions, and interfaces that exist at the vast majority of domestic power reactor sites and potential away-from-reactor storage sites in the contiguous United States. These FuelSolutions™ storage FSARs also provide the basis for component fabrication and acceptance, and the requirements for safe operation and maintenance of the FuelSolutions™ Storage System components, consistent with the design basis and safety analysis documented herein. In accordance with 10CFR72, Subpart K, site-specific implementation of the generically certified FuelSolutions™ Storage System requires that the licensee perform a site-specific safety evaluation, as defined in 10CFR72.212. The FuelSolutions™ Storage System FSAR identifies a limited number of conditions that are necessarily site-specific and are to be addressed in the licensee's 10CFR72.212 evaluation. These include:

- Siting of the ISFSI and design of the storage pad and security system. Site-specific demonstration of compliance with regulatory dose limits. Implementation of a site-specific as low as reasonably achievable (ALARA) program.
- An evaluation of site-specific hazards and design conditions that may exist at the ISFSI site or the transfer route between the plant's cask receiving bay and the ISFSI. These include but are not limited to explosion and fire hazards, flooding conditions, volcanism, landslides, and lightning protection.
- Determination that the physical and nucleonic characteristics and the condition of the SNF assemblies to be dry stored meet the fuel acceptance requirements of the *technical specification* contained in the C of C.
- An evaluation of interface and design conditions that exist within the plant's fuel building in which canister fuel loading, canister closure, and canister transfer operations are to be conducted in accordance with the applicable 10CFR50 requirements and *technical specifications* for the plant.
- Detailed site-specific operating, maintenance, and inspection procedures prepared in accordance with the generic procedures provided in the FuelSolutions™ storage FSARs and the *technical specifications* provided in the C of C.
- Performance of pre-operational testing.

- Implementation of a safeguards and accountability program in accordance with 10CFR73.[3] Preparation of a physical security plan in accordance with 10CFR73.55.
- Review of the reactor emergency plan, quality assurance (QA) program, training program, and radiation protection program.

The generic safety analyses contained in the FuelSolutions™ storage FSARs may be used as input and for guidance by the licensee in performing a 10CFR72.212 evaluation.

Licensing Approach

Energy*Solutions* SFD has elected to use a modular approach to organization of the FuelSolutions™ storage FSARs, as illustrated in Figure 1.0-2, which separates the system elements that are common to all canisters from those that are canister-specific. In addition, the generic system descriptions, design criteria, and analysis methodologies applicable to the safety evaluations performed for all system components are included in this FuelSolutions™ Storage System FSAR, to the maximum extent possible. Similarly, the generic operating procedures, maintenance requirements, *technical specifications*, and QA requirements applicable to all system components are included in this FSAR. Specifically, Chapters 1 through 14 of this FuelSolutions™ Storage System FSAR contain the following information:

1. Identification of all FuelSolutions™ Storage System components and support equipment. Descriptions of the FuelSolutions™ W150 Storage Cask and W100 Transfer Cask. Summary descriptions of all support equipment that is not unique to a particular canister design, if any.
2. The design criteria applicable to all FuelSolutions™ Storage System components including canister interface requirements, excluding those specifically related to canister contents or the canister itself. The safety protection systems for the FuelSolutions™ Storage System, excluding those that are unique to a particular canister design, if any.
3. The structural design and analysis of the FuelSolutions™ W150 Storage Cask and W100 Transfer Cask for all loading conditions, including the design basis canister interface loadings.
4. The thermal design and analysis of the FuelSolutions™ W150 Storage Cask and W100 Transfer Cask for all design conditions, including the design basis canister interface thermal conditions.
5. Descriptions of the FuelSolutions™ Storage System component shielding design features and operational ALARA measures, excluding those that are unique to a particular canister design, if any. The generic methodology used for fuel qualification, including that used for determination of the acceptable cooling times for combinations of initial enrichments and burnups. The shielding analysis of the FuelSolutions™ W150 Storage Cask and W100 Transfer Cask and representative component dose rates for all design conditions including the design basis canister radiological conditions, but excluding those that are unique to a particular canister design, if any.

[3] Title 10, U.S. Code of Federal Regulations, Part 73 (10CFR73), *Physical Protection of Plants and Materials*, 1995.

6. A summary of the criticality analysis approach. Reference to the criticality safety analysis contained in each FuelSolutions™ Canister Storage FSAR.
7. A description of the methodology used for analysis of a postulated radiological release accident from a FuelSolutions™ canister, including the radionuclide release fractions, but excluding the canister-specific radionuclide inventory and the resulting accident dose rates.
8. The generic operating procedures for the FuelSolutions™ Storage System, excluding those that are unique to a particular canister design, if any.
9. The acceptance criteria and maintenance requirements applicable to the FuelSolutions™ Storage System, excluding those that are specific to the canister.
10. Descriptions of the FuelSolutions™ Storage System component radiation protection features, excluding those that are unique to a particular canister design, if any. Representative occupational exposure estimates that are not unique to a particular canister design. Site dose calculations for a sample ISFSI.
11. The accident analyses of the FuelSolutions™ W150 Storage Cask and W100 Transfer Cask for all design conditions, including the design basis canister interface conditions.
12. The *technical specifications* applicable to the FuelSolutions™ Storage System, including those generically applicable to all FuelSolutions™ canisters, but excluding those that are unique to a particular canister design.
13. The QA requirements applicable to the FuelSolutions™ Storage System.
14. The decommissioning assessment for the FuelSolutions™ Storage System components, including the storage cask, transfer cask, and canister.

Chapters 1 through 14 of each FuelSolutions™ Canister Storage FSAR contain the following information:

1. A description of the respective FuelSolutions™ canister, including the canister contents.
2. The design criteria specific to the respective FuelSolutions™ canister and its contents.
3. The structural design and analysis of the respective FuelSolutions™ canister for all loading conditions.
4. The thermal design and analysis of the respective FuelSolutions™ canister and its contents for all design conditions.
5. Tabulation of the acceptable cooling times for each enrichment and burnup combination for the SNF assemblies qualified to be loaded into the respective FuelSolutions™ canister. The shielding design and analysis for any canister unique conditions and the resulting component dose rates.
6. The criticality safety analysis for the respective FuelSolutions™ canister and tabulation of the maximum acceptable initial enrichment for each SNF assembly class qualified to be loaded into the canister.
7. Reference to the methodology used for analysis of a radiological release accident, including the radionuclide release fractions contained in this FuelSolutions™ Storage System FSAR.

The confinement features, radionuclide inventory, and the resulting postulated accident dose rates.

8. Operating procedures that are unique to a particular FuelSolutions™ canister design, if any.
9. The acceptance criteria and maintenance requirements applicable to the respective FuelSolutions™ canister.
10. Reference to the radiation protection features of the canister, representative occupational exposure estimates, and sample ISFSI dose estimates contained in this FuelSolutions™ Storage System FSAR. Descriptions of the radiation protection features that are unique to a particular canister design, if any, and the associated occupational exposure estimates.
11. The accident analyses for the respective FuelSolutions™ canister.
12. The *technical specifications* that are unique to the respective FuelSolutions™ canister, including the SNF assembly acceptance specification.
13. Reference to the QA requirements contained in this FuelSolutions™ Storage System FSAR.
14. Reference to the decommissioning assessment for the FuelSolutions™ Storage System components contained in this FuelSolutions™ Storage System FSAR.

The purpose of this approach is that once reviewed and generically certified by the NRC, the C of C can more easily be amended to include additional or alternate FuelSolutions™ canister designs or payloads without having to re-review the information contained in this FuelSolutions™ Storage System FSAR, which is applicable to all FuelSolutions™ canisters.

To facilitate this approach, canister interface parameters with the storage cask and transfer cask such as canister size, weight, heat generation, and dose rates are established. Values for these canister interface parameters are defined in this FuelSolutions™ Storage System FSAR within which all acceptance criteria for the system are met. Using this approach, all FuelSolutions™ canisters and their contents that remain within the acceptance values established for these interface parameters, as demonstrated in the respective FuelSolutions™ Canister Storage FSAR, and that meet all the applicable acceptance criteria for the canister itself are qualified for use in the FuelSolutions™ Storage System. This will be accomplished by submittal of additional or revised FuelSolutions™ Canister Storage FSARs for review and approval by the NRC, which will rely on this FuelSolutions™ Storage System FSAR as approved by the NRC.

Safety Analysis Report Preparation

The format and content of this FSAR, and associated FuelSolutions™ Canister Storage FSARs, are based on Regulatory Guide 3.61[4] and NUREG-1536.[5] The guidance provided by the NUREG-1536 review criteria on meeting the regulatory requirements is addressed by more than one FuelSolutions™ storage FSAR. Table 1.0-1 provides a matrix of the topics in NUREG-1536 and Regulatory Guide 3.61, the corresponding 10CFR72 requirements, and a reference to the applicable FuelSolutions™ storage FSAR section that addresses each topic. The formatting

[4] Regulatory Guide 3.61, *Standard Format and Content for a Topical Safety Analysis Report for a Spent Fuel Dry Storage Cask*, U.S. Nuclear Regulatory Commission, February 1989.

[5] NUREG-1536, *Standard Review Plan for Dry Cask Storage Systems*, U.S. Nuclear Regulatory Commission, January 1997.

guidelines provided in Regulatory Guide 3.61 were closely followed when possible; however, in order to address the review criteria delineated by NUREG-1536, amended or additional subsections were added to this FSAR. In addition, this FSAR revision incorporates the changes resulting from the NRC Requests for Additional Information (RAIs) received prior to the issue date of this FSAR.

In complying with the guidance provided by NUREG-1536 and Regulatory Guide 3.61, efforts have been made to report the same information only once in the most relevant location in a particular FSAR to avoid the potential for conflicts, contradictions and ambiguities, and to facilitate the maintenance and future updates to these FSARs required by 10CFR72. Appropriate cross-references are provided to aid the reader in locating information provided elsewhere in the FSARs, when necessary to support the discussions of a particular FSAR section, rather than to repeat the same information in that section.

Off-site transport of FuelSolutions™ canisters, in accordance with the requirements of 10CFR71,[6] is addressed in a separate transportation license application.

This chapter provides a general description of the FuelSolutions™ Storage System, drawings of the FuelSolutions™ Storage System structures, systems, and components (SSCs) that are classified as important to safety, and the qualifications of the applicant.

[6] Title 10, U.S. Code of Federal Regulations, Part 71 (10CFR71), *Packaging and Transportation of Radioactive Materials*, 1996.

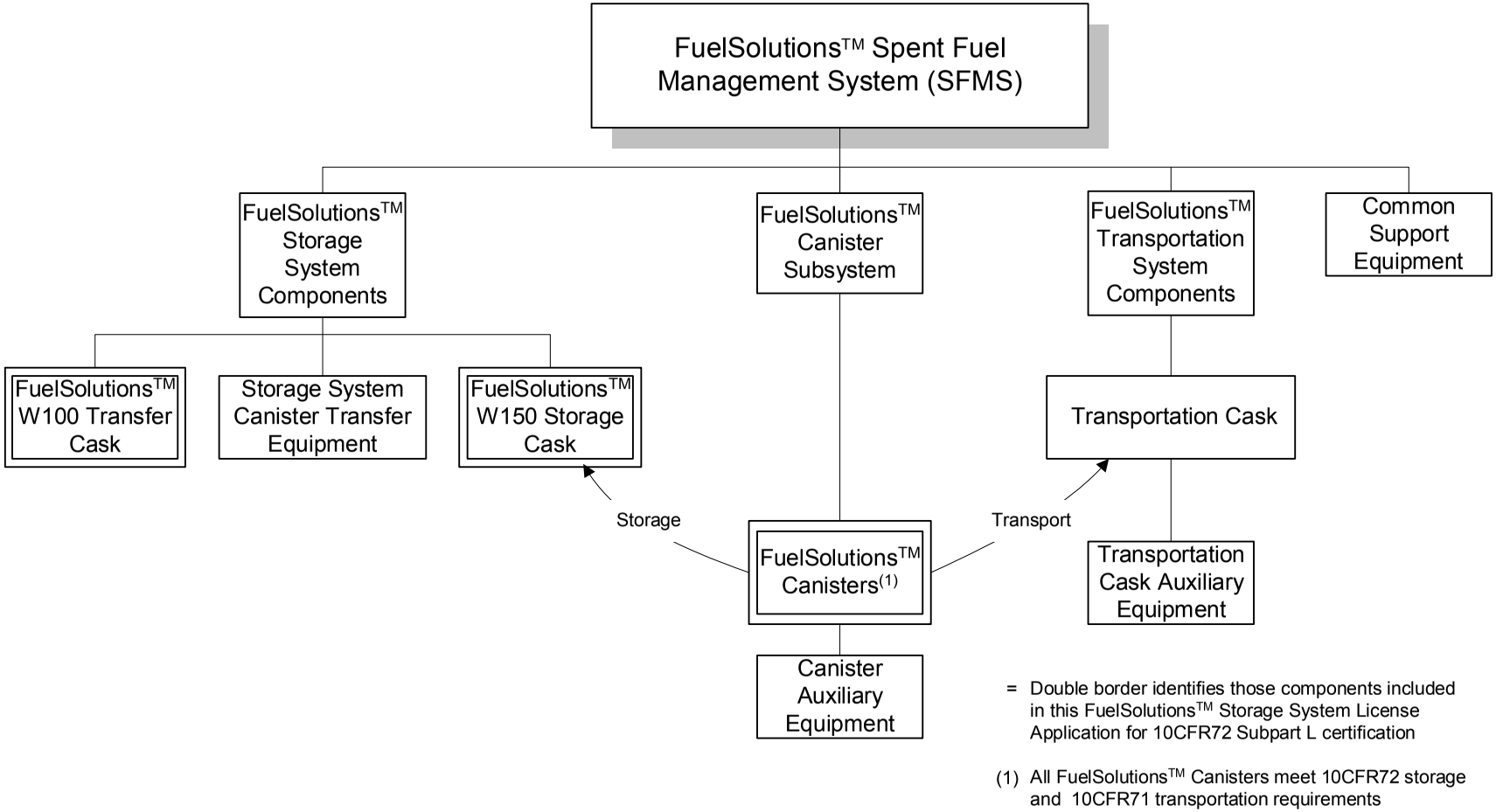

Figure 1.0-1 - FuelSolutions™ Spent Fuel Management System Elements

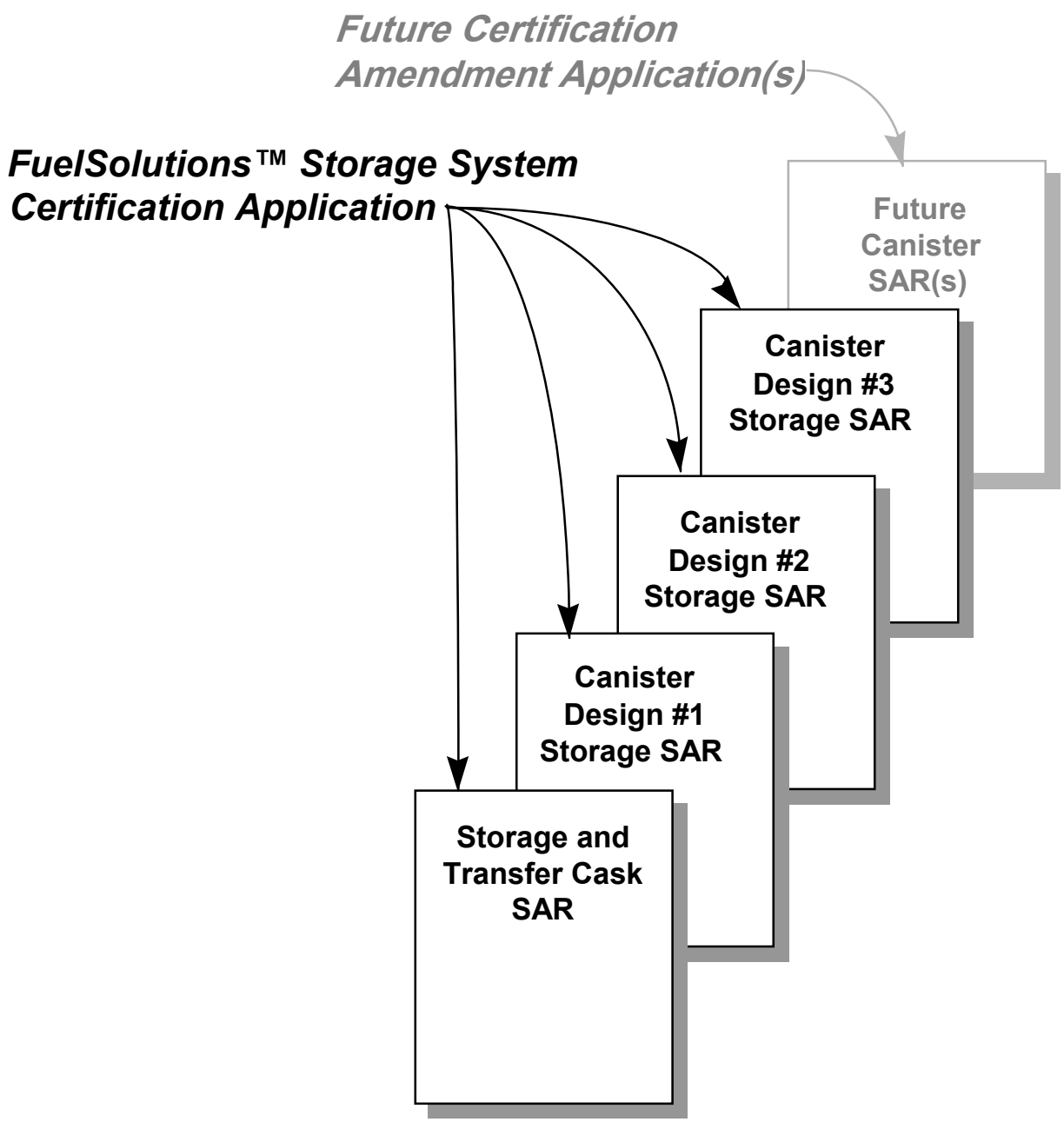

Figure 1.0-2 - FuelSolutions™ Storage System Certification Application Approach

Table 1.0-1 - FuelSolutions™ Storage System FSAR Regulatory Compliance Cross-Reference Matrix (16 pages)

Regulatory Guide 3.61 Section and Content	Associated NUREG-1536 Review Criteria	Applicable 10CFR72 or 10CFR20 Requirement	FuelSolutions™ Storage System FSAR	FuelSolutions™ Canister Storage FSAR
1. General Description				
1.1 Introduction	1. III.1 General Description & Operational Features	10CFR72.24 (b)	1.1	1.1
1.2 General Description	1.III.1 General Description & Operational Features	10CFR72.24 (b)	1.2	1.2
1.2.1 Cask Characteristics	1.III.1 General Description & Operational Features	10CFR72.24 (b)	1.2.1	1.2.1
1.2.2 Operational Features	1.III.1 General Description & Operational Features	10CFR72.24 (b)	1.2.2	1.2.2
1.2.3 Cask Contents	1.III.3 DCSS Contents	10CFR72.2 (a) (1) 10CFR72.236 (a)	--	1.2.3
1.3 Identification of Agents & Contractors	1.III.4 Qualification of the Applicant	10CFR72.24 (j) 10CFR72.28 (a)	1.3	1.3
1.4 Generic Cask Arrays	1.III.1 General Description & Operational Features	10CFR72.24 (c) (3)	1.4	--
1.5 Supplemental Data	1.III.2 Drawings	10CFR72.24 (c) (3)	1.5	1.5
NA	1.III.6 Consideration of Transport Requirements	10CFR72.230 (b) 10CFR72.236 (m)	(1)	(1)
2. Principal Design Criteria				
2.1 Spent Fuel To Be Stored	2.III.2.a Spent Fuel Specifications	10CFR72.2 (a) (1) 10CFR72.236 (a)	--	2.2

Table 1.0-1 - FuelSolutions™ Storage System FSAR Regulatory Compliance Cross-Reference Matrix (16 pages)

Regulatory Guide 3.61 Section and Content	Associated NUREG-1536 Review Criteria	Applicable 10CFR72 or 10CFR20 Requirement	FuelSolutions™ Storage System FSAR	FuelSolutions™ Canister Storage FSAR
2.2 Design Criteria for Environmental Conditions and Natural Phenomena	2.III.2.b External Conditions,	10CFR72.122 (b)	2.3.4.7	--
	2.III.3.b Structural, 2.III.3.c Thermal	10CFR72.122 (c)	2.3.3.4, 2.3.3.8	2.3.3.6, 2.3.4.1
		10CFR72.122 (b) (1)	2.3.1	
		10CFR72.122 (h) (1)	--	2.1.2
2.2.1 Tornado and Wind Loading	2.III.2.b External Conditions	10CFR72.122 (b)	2.3.4.2 2.3.4.3 2.3.4.5	--
2.2.2 Water Level (Flood)	2.III.2.b External Conditions 2.III.3.b Structural	10CFR72.122 (b) (2)	2.3.4.1	2.3.4.1
2.2.3 Seismic	2.III.3.b Structural	10CFR72.102 (f) 10CFR72.122 (b) (2)	2.3.4.4	2.3.4.3
2.2.4 Snow and Ice	2.III.2.b External Conditions 2.III.3.b Structural	10CFR72.122 (b)	2.3.4.8	--
2.2.5 Combined Load	2.III.3.b Structural	10CFR72.24 (d) 10CFR72.122 (b)(2)(ii)	2.3.5	2.3.5
NA	2.III.1 Structures, Systems, and Components Important to Safety	10CFR72.122 (a)	2.1.1	2.1.1
	2.III.3 Design Criteria for Safety Protection Systems	10CFR72.236 (g) 10CFR72.24 (c) (1) 10CFR72.24 (c) (2) 10CFR72.24 (c) (4) 10CFR72.120 (a) 10CFR72.236 (b)	2.1.2	2.1.2
	2.III.3.c Thermal	10CFR72.128 (a) (4)	2.1.2	2.1.2

Table 1.0-1 - FuelSolutions™ Storage System FSAR Regulatory Compliance Cross-Reference Matrix (16 pages)

Regulatory Guide 3.61 Section and Content	Associated NUREG-1536 Review Criteria	Applicable 10CFR72 or 10CFR20 Requirement	FuelSolutions™ Storage System FSAR	FuelSolutions™ Canister Storage FSAR
	2.III.3.f Operating Procedures	10CFR72.24 (f) 10CFR72.128 (a) (5)	10.1	--
		10CFR72.236 (h)	8.0	8.0
		10CFR72.24 (l) (2)	2.1.2	2.1.2
		10CFR72.236 (I)	1.2.1, 1.2.1.4.1	--
		10CFR72.24 (e) 10CFR72.104 (b)	1.2.1, 8.0, 10.1, 10.2	1.2.1, 8.0
		10CFR72.122 (l)	--	1.2.2.2
	2.III.3.g Acceptance Tests & Maintenance	10CFR72.236 (g) 10CFR72.122 (f) 10CFR72.128 (a) (1)	9.0	9.0
2.3 Safety Protection Systems	--	--	2.4	--
2.3.1 General	--	--	2.4.1	--
2.3.2 Protection by Multiple Confinement Barriers and Systems	2.III.3.b Structural	10CFR72.236 (l)	2.4.2	--
	2.III.3.c Thermal	10CFR72.236 (f)	2.4.2.2	--
	2.III.3.d Shielding/ Confinement/ Radiation Protection	10CFR72.126 (a) 10CFR72.128 (a) (2)	2.4.5	--
		10CFR72.128 (a) (3)	2.4.2.1	--
		10CFR72.236 (d)	2.4.5, 2.4.2.1	--
		10CFR72.236 (e)	2.4.2.1	--
2.3.3 Protection by Equipment & Instrument Selection	2.III.3.d Shielding/ Confinement/ Radiation Protection	10CFR72.122 (h) (4) 10CFR72.122 (I) 10CFR72.128 (a) (1)	2.4.3	7.1
2.3.4 Nuclear Criticality Safety	2.III.3.e Criticality	10CFR72.124 (a) 10CFR72.236 (c)	2.4.4, 6.0	6.0
		10CFR72.124 (b)	6.6	--

Table 1.0-1 - FuelSolutions™ Storage System FSAR Regulatory Compliance Cross-Reference Matrix (16 pages)

Regulatory Guide 3.61 Section and Content	Associated NUREG-1536 Review Criteria	Applicable 10CFR72 or 10CFR20 Requirement	FuelSolutions™ Storage System FSAR	FuelSolutions™ Canister Storage FSAR
2.3.5 Radiological Protection	2.III.3.d Shielding/ Confinement/ Radiation Protection	10CFR72.24 (d) 10CFR72.104 (a) 10CFR72.236 (d)	10.4.1	--
		10CFR72.24 (d) 10CFR72.106 (b) 10CFR72.236 (d)	10.4.2	--
		10CFR72.24 (m)	2.4.2.1	7.3
2.3.6 Fire and Explosion Protection	2.III.3.b Structural	10CFR72.122 (c)	2.3.3.4, 2.3.3.8	--
2.4 Decommissioning Considerations	2.III.1.h Decommissioning	10CFR72.130 10CFR72.236 (I)	14	--
	14.III.1 Design	10CFR72.130	14	--
	14.III.2 Cask Decontamination	10CFR72.236 (i)	14	--
	14.III.3 Financial Assurance & Record Keeping	10CFR72.30	(2)	(2)
	14.III.4 License Termination	10CFR72.54	(2)	(2)
3. Structural Evaluation				
3.1 Structural Design	3.III.1 SSC Important to Safety	10CFR72.24 (c) (3) 10CFR72.24 (c) (4)	3.1	3.1
	3.III.6 Concrete Structures	10CFR72.182 (b) 10CFR72.182 (c)	(2)	(2)
3.2 Weights and Centers of Gravity	3.V.1.b.2 Structural Design Features	--	3.2	3.2
3.3 Mechanical Properties of Materials	3.V.1.c Structural Materials	10CFR72.24 (c) (3)	3.3	3.3
	3.V.2.c Structural Materials			

Table 1.0-1 - FuelSolutions™ Storage System FSAR Regulatory Compliance Cross-Reference Matrix (16 pages)

Regulatory Guide 3.61 Section and Content	Associated NUREG-1536 Review Criteria	Applicable 10CFR72 or 10CFR20 Requirement	FuelSolutions™ Storage System FSAR	FuelSolutions™ Canister Storage FSAR
3.4 General Standards for Casks	--	--	3.4	3.4
3.4.1 Chemical and Galvanic Reactions	3.V.1.b.2 Structural Design Features	--	3.4.1	3.4.1
3.4.2 Positive Closure	--	--	3.4.2	3.4.2
3.4.3 Lifting Devices	3.V.1.ii(4)(a) Trunnions	--	3.4.3	3.4.3
3.4.4 Heat	3.V.1.d Structural Analysis	10CFR72.24 (d) 10CFR72.122 (b) 10CFR72.236 (g)	3.5	3.5
3.4.5 Cold	3.V.1.d Structural Analysis	10CFR72.24 (d) 10CFR72.122 (b) 10CFR72.236 (g)	3.5	3.5
NA	3.V.1.d Structural Analysis	10CFR72.24 (d) 10CFR72.122 (b)	3.6	3.6
	3.V.1.d Structural Analysis	10CFR72.24 (d) 10CFR72.102 (f) 10CFR72.122 (b) 10CFR72.122 (c)	3.7	3.7
3.5 Fuel Rods	--	10CFR72.122 (h) (1)	--	3.8, 4.3.2
3.6 Supplemental Data	4.V.6 Supplemental Info.	--	--	3.6
4. Thermal Evaluation				
4.1 Discussion	4.III Regulatory Requirements	10CFR72.24 (c) (3) 10CFR72.128 (a) (4) 10CFR72.236 (f)	4.1	4.1
		10CFR72.122 (l)	--	1.2.2.2
		10CFR72.236 (h)	8.0	8.0

Table 1.0-1 - FuelSolutions™ Storage System FSAR Regulatory Compliance Cross-Reference Matrix (16 pages)

Regulatory Guide 3.61 Section and Content	Associated NUREG-1536 Review Criteria	Applicable 10CFR72 or 10CFR20 Requirement	FuelSolutions™ Storage System FSAR	FuelSolutions™ Canister Storage FSAR
4.2 Summary of Thermal Properties of Materials	4.V.4.b Material Properties	--	4.2	4.2
4.3 Specifications for Components	4.IV Acceptance Criteria	--	4.3	4.3
		10CFR72.122 (h) (1)	--	4.3.2
4.4 Thermal Evaluation for Normal Conditions of Storage	4.IV Acceptance Criteria	10CFR72.24 (d) 10CFR72.236 (g)	4.4	4.4
NA	4.IV Acceptance Criteria	10CFR72.24 (d)	4.5	4.5
	4.IV Acceptance Criteria	10CFR72.24 (d) 10CFR72.122 (c)	4.6	4.6
4.5 Supplemental Data	4.V.6 Supplemental Info.	--	4.7	4.7
5. Shielding Evaluation				
5.1 Discussion and Results	--	--	5.1	5.1
5.2 Source Specification	5.V.2 Radiation Source Definition	--	5.2	5.2
5.2.1 Gamma Source	5.V.2.a Gamma Source	--	5.2.2	5.2
5.2.2 Neutron Source	5.V.2.b Neutron Source	--	5.2.2	5.2
5.3 Model Specification	5.V.3 Shielding Model Specification	--	5.3	5.3
5.3.1 Description of the Radial and Axial Shielding Configurations	5.V.3.a Configuration of the Shielding and Source	--	5.3.2, 5.3.3	5.3.1
5.3.2 Shield Regional Densities	5.V.3.b Material Properties	10CFR72.24 (c) (3)	5.3.4	5.3.2

Table 1.0-1 - FuelSolutions™ Storage System FSAR Regulatory Compliance Cross-Reference Matrix (16 pages)

Regulatory Guide 3.61 Section and Content	Associated NUREG-1536 Review Criteria	Applicable 10CFR72 or 10CFR20 Requirement	FuelSolutions™ Storage System FSAR	FuelSolutions™ Canister Storage FSAR
5.4 Shielding Evaluation	5.V.4 Shielding Analysis	10CFR72.24 (d) 10CFR72.104 (a) 10CFR72.106 (b) 10CFR72.128 (a) (2) 10CFR72.236 (d)	5.4	5.4
5.5 Supplemental Data	5.V.5 Supplemental Info.		5.5	--
6. Criticality Evaluation				
6.1 Discussion and Results	--	--	6.1	6.1
6.2 Spent Fuel Loading	6.V.2 Fuel Specification	--	6.2	6.2
6.3 Model Specifications	6.V.3 Model Specification	--	6.3	6.3
6.3.1 Description of Calculational Model	6.V.3.a Configuration	--	--	6.3.1
6.3.2 Cask Regional Densities	6.V.3.b Material Properties	10CFR72.24 (c) (3)	--	6.3.2
6.4 Criticality Calculation	6.V.4.a Computer Programs	--	6.4	6.4
6.4.1 Calculational or Experimental Method	--	--	--	6.4.1
6.4.2 Fuel Loading or Other Contents Loading Optimization	--	--	--	6.4.2
6.4.3 Criticality Results	6.IV Acceptance Criteria	10CFR72.24 (d) 10CFR72.124 10CFR72.236 (c)	--	6.4.2

Table 1.0-1 - FuelSolutions™ Storage System FSAR Regulatory Compliance Cross-Reference Matrix (16 pages)

Regulatory Guide 3.61 Section and Content	Associated NUREG-1536 Review Criteria	Applicable 10CFR72 or 10CFR20 Requirement	FuelSolutions™ Storage System FSAR	FuelSolutions™ Canister Storage FSAR
6.5 Critical Benchmark Experiments	6.V.4.b Benchmark Comparisons	--	6.5	6.5
6.6 Supplemental Data	6.V.5 Supplemental Info.	10CFR72.236 (g)	6.6	--
7. Confinement				
7.1 Confinement Boundary	7.V.1.b Design Features	10CFR72.24 (c) (3)	--	7.1
7.1.1 Confinement Vessel	7.III.2 Protection of Spent Fuel Cladding	10CFR72.122 (h) (l)	--	7.1.1
7.1.2 Confinement Penetrations	--	--	--	7.1.2
7.1.3 Seals and Welds	--	--	--	7.1.3
7.1.4 Closure	7.III.3 Redundant Sealing	10CFR72.236 (e)	--	7.1.4
7.2 Requirements for Normal Conditions of Storage	7.III.7 Evaluation of Confinement System	10CFR72.24 (d) 10CFR72.236 (l)	--	7.2
7.2.1 Release of Radioactive Material	7.III.6 Release of Radionuclides to the Environment	10CFR72.24 (1) (1)	--	7.2.1
	7.III.4 Monitoring of Confinement	10CFR72.122 (h) (4) 10CFR72.128 (a) (1)	--	7.2.1
	7.III.5 Instrumentation	10CFR72.24 (1) 10CFR72.122 (i)	--	7.2.1
	7.III.8 Annual Dose	10CFR72.104 (a)	--	7.2.1
7.2.2 Pressurization of Confinement Vessel	--	--	--	7.2.2

Table 1.0-1 - FuelSolutions™ Storage System FSAR Regulatory Compliance Cross-Reference Matrix (16 pages)

Regulatory Guide 3.61 Section and Content	Associated NUREG-1536 Review Criteria	Applicable 10CFR72 or 10CFR20 Requirement	FuelSolutions™ Storage System FSAR	FuelSolutions™ Canister Storage FSAR
7.3 Confinement Requirements for Hypothetical Accident Conditions	7.III.7 Evaluation of Confinement System	10CFR72.24 (d) 10CFR72.122 (b) 10CFR72.236 (l)	--	7.3
7.3.1 Fission Gas Products	--	--	--	7.3.1
7.3.2 Release of Contents	--	--	7.3.2	--
NA	--	10CFR72.106(b)	--	7.3.3, 7.3.4
7.4 Supplemental Data	7.V Supplemental Info.	--	--	7.4
8. Operating Procedures				
8.1 Procedures for Loading the Cask	8.III.1 Develop Operating Procedures	10CFR72.40 (a) (5)	8.1	8.1
	8.III.2 Operational Restrictions for ALARA	10CFR72.24 (e) 10CFR72.104 (b)		
	8.III.3 Radioactive Effluent Control	10CFR72.24 (1) (2)		
	8.III.4 Written Procedures	10CFR72.212 (b) (9)		
	8.III.5 Establish Written Procedures and Tests	10CFR72.234 (f)		
	8.III.6 Wet or Dry Loading and Unloading Compatibility	10CFR72.236 (h)		
	8.III.7 Cask Design to Facilitate Decon	10CFR72.236 (i)	1.2.1, 1.2.1.4.1	--

Table 1.0-1 - FuelSolutions™ Storage System FSAR Regulatory Compliance Cross-Reference Matrix (16 pages)

Regulatory Guide 3.61 Section and Content	Associated NUREG-1536 Review Criteria	Applicable 10CFR72 or 10CFR20 Requirement	FuelSolutions™ Storage System FSAR	FuelSolutions™ Canister Storage FSAR
8.2 Procedures for Unloading the Cask	8.III.1 Develop Operating Procedures	10CFR72.40 (a) (5)	8.2	8.2
	8.III.2 Operational Restrictions for ALARA	10CFR72.24 (e) 10CFR72.104 (b)		
	8.III.3 Radioactive Effluent Control	10CFR72.24 (1) (2)		
	8.III.4 Written Procedures	10CFR72.212 (b) (9)		
	8.III.5 Establish Written Procedures and Tests	10CFR72.234 (f)		
	8.III.6 Wet or Dry Loading and Unloading Compatibility	10CFR72.236 (h)		
	8.III.8 Ready Retrieval	10CFR72.122 (1)		
8.3 Preparation of the Cask	--	--	8.3	8.3
8.4 Supplemental Data	--	--	--	--
NA	8.III.9 Design Minimize Radwaste	10CFR72.24 (f) 10CFR72.128 (a) (5)	10.1	--
	8.III.10 SSCs Permit Inspection, Maintenance, Testing	10CFR72.122 (f)	9.0	9.0
9. Acceptance Criteria and Maintenance Program				
9.1 Acceptance Criteria	9.III.1.a Preoperational Testing & Initial Operations	10CFR72.24 (p)	9.1	9.1
	9.III.1.c SSC Tested & Maintained to Appropriate Quality Standards	10CFR72.24 (c) 10CFR72.122 (a)		
	9.III.1.d Test Program	10CFR72.162		

Table 1.0-1 - FuelSolutions™ Storage System FSAR Regulatory Compliance Cross-Reference Matrix (16 pages)

Regulatory Guide 3.61 Section and Content	Associated NUREG-1536 Review Criteria	Applicable 10CFR72 or 10CFR20 Requirement	FuelSolutions™ Storage System FSAR	FuelSolutions™ Canister Storage FSAR
	9.III.1.e Appropriate Tests	10CFR72.236 (l)		
	9.III.1.f Inspection for cracks, pinholes, voids, defects	10CFR72.236 (j)		
	9.III.1.g Provisions that permit Commission Tests	10CFR72.232 (b)		
9.2 Maintenance Program	9.III.1.b Maintenance	10CFR72.236 (g)	9.2	9.2
	9.III.1.c SSC Tested & Maintained to Appropriate Quality Standards	10CFR72.122 (f) 10CFR72.128 (a) (1)		
	9.III.1.h Records of Maintenance	10CFR72.212. (b) (8)		
NA	9.III.2 Resolution of Issues Concerning Adequacy of Reliability	10CFR72.24 (i)	(3)	(3)
	9.III.1.d Submit Pre-op Test Results to NRC	10CFR72.82 (e)	(2)	(2)
	9.III.1.i Casks conspicuously and durably marked	10CFR72.236 (k)	9.1.2.7.1, 9.1.3.7.1	9.1.7.2
	9.III.3 Cask Identification			
10. Radiation Protection				
10.1 Ensuring that Occupational Radiation Exposures Are As Low As Is Reasonably Achievable (ALARA)	10.III.4 ALARA	10CFR20.1101 10CFR72.24 (e) 10CFR72.104 (b) 10CFR72.126 (a)	10.1	--
10.2 Radiation Protection Design Features	10.V.1.b Design Features	10CFR72.126 (a) (6)	10.2	--

Table 1.0-1 - FuelSolutions™ Storage System FSAR Regulatory Compliance Cross-Reference Matrix (16 pages)

Regulatory Guide 3.61 Section and Content	Associated NUREG-1536 Review Criteria	Applicable 10CFR72 or 10CFR20 Requirement	FuelSolutions™ Storage System FSAR	FuelSolutions™ Canister Storage FSAR
10.3 Estimated Onsite Collective Dose Assessment	10.III.2 Occupational Exposures	10CFR.20.1201 10CFR20.1207 10CFR20.1208 10CFR20.1301	10.3	--
NA	10.III.3 Public Exposure	10CFR72.104 10CFR72.106	10.4	--
	10.III.1 Effluents & Direct Radiation	10CFR72.104		
11. Accident Analyses				
11.1 Off-Normal Operations	11.III.2 Meet Dose Limits for Anticipated Events	10CFR72.24 (d) 10CFR72.104 (a) 10CFR72.236 (d)	11.1	11.1
	11.III.4 Maintain Subcritical Condition	10CFR72.124 (a) 10CFR72.236 (c)		
	11.III.7 Instrumentation & Control for Off-Normal Condition	10CFR72.122 (i)		
11.2 Accidents	11.III.1 SSC Important to Safety Designed for Accidents	10CFR72.24 (d) (2) 10CFR72.122 (b) (2) 10CFR72.122 (b) (3) 10CFR72.122 (d) 10CFR72.122 (g)	11.2	11.2
	11.III.5 Maintain Confinement for Accident	10CFR72.236 (l)		
	11.III.4 Maintain Subcritical Condition	10CFR72.124 (a) 10CFR72.236 (c)	11.2	11.2, 6.0

Table 1.0-1 - FuelSolutions™ Storage System FSAR Regulatory Compliance Cross-Reference Matrix (16 pages)

Regulatory Guide 3.61 Section and Content	Associated NUREG-1536 Review Criteria	Applicable 10CFR72 or 10CFR20 Requirement	FuelSolutions™ Storage System FSAR	FuelSolutions™ Canister Storage FSAR
	11.III.3 Meet Dose Limits for Accidents	10CFR72.24 (d) (2) 10CFR72.24 (m) 10CFR72.106 (b)	11.2	11.2, 7.3
	11.III.6 Retrieval	10CFR72.122 (l)	8.2	8.2
	11.III.7 Instrumentation & Control for Accident Cond.	10CFR72.122 (i)	(4)	--
NA	11.III.8 Confinement Monitoring	10CFR72.122 (h) (4)	--	7.2.1
12. Operating Controls and Limits				
12.1 Proposed Operating Controls and Limits	--	10CFR72.44 (c)	12.3	12.3
	12.III.1.e Administrative Controls	10CFR72.44 (c) (5)		
12.2 Development of Operating Controls and Limits	12.III.1 General Requirement for Technical Specifications	10CFR72.24 (g) 10CFR72.26 10CFR72.44 (c) 10CFR72 Subpart E 10CFR72 Subpart F	12.3	12.3
12.2.1 Functional and Operating Limits, Monitoring Instruments, and Limiting Control Settings	12.III.1.a Functional/ Operating Units, Monitoring Instruments and Limiting Controls	10CFR72.44 (c) (1)	12.3	12.3

Table 1.0-1 - FuelSolutions™ Storage System FSAR Regulatory Compliance Cross-Reference Matrix (16 pages)

Regulatory Guide 3.61 Section and Content	Associated NUREG-1536 Review Criteria	Applicable 10CFR72 or 10CFR20 Requirement	FuelSolutions™ Storage System FSAR	FuelSolutions™ Canister Storage FSAR
12.2.2 Limiting Conditions for Operation	12.III.1.b Limiting Controls	10CFR72.44 (c) (2)	12.3	12.3
	12.III.2.a Type of Spent Fuel	10CFR72.236 (a)	--	12.3
	12.III.2.b Enrichment			
	12.III.2.c Burnup			
	12.III.2.d Minimum Acceptable Cooling Time			
	12.III.2.f Maximum Spent Fuel Loading Limit			
	12.III.2.g Weights and Dimension			
	12.III.2.h Condition of Spent Fuel			
	12.III.2.e Maximum Heat Dissipation	10CFR72.236 (a)	12.3	12.3
	12.III.2.i Inerting Atmosphere Requirements	10CFR72.236 (a)	--	12.3
12.2.3 Surveillance Specifications	12.III.1.c Surveillance Requirements	10CFR72.44 (c) (3)	12.3	--
12.2.4 Design Features	12.III.1.d Design Features	10CFR72.44 (c) (4)	12.3	12.3
12.2.5 Suggested Format for Operating Controls and Limits	--	--	12.3	12.3

Table 1.0-1 - FuelSolutions™ Storage System FSAR Regulatory Compliance Cross-Reference Matrix (16 pages)

Regulatory Guide 3.61 Section and Content	Associated NUREG-1536 Review Criteria	Applicable 10CFR72 or 10CFR20 Requirement	FuelSolutions™ Storage System FSAR	FuelSolutions™ Canister Storage FSAR
NA	12.III.2 SSC Design Bases & Criteria	10CFR72.236 (b)	2.1.2	2.1.2
	12.III.2 Criticality Control	10CFR72.236 (c)	2.4.4, 6.0	6.4.2
	12.III.2 Shielding and Confinement	10CFR20 10CFR72.236 (d)	5.4, 10.4	5.4, 7.2, 7.3
	12.III.2 Redundant Sealing	10CFR72.236 (e)	2.4.2.1	7.1.4
	12.III.2 Passive Heat Removal	10CFR72.236 (f)	2.4.2.2, 4.1, 4.4.1.1.1	4.1, 4.4.1
	12.III.2 20 Year Storage and Maintenance	10CFR72.236 (g)	2.1.2, 3.5, 4.4, 9.2	2.1.2, 3.5, 4.4, 9.2
	12.III.2 Decontamination	10CFR72.236 (i)	1.2.1, 1.2.1.4.1	--
	12.III.2 Wet or Dry Loading	10CFR72.236 (h)	8.0	8.0
	12.III.2 Confinement Effectiveness	10CFR72.236 (j)	9.1	9.1
	12.III.2 Evaluation for Confinement	10CFR72.236 (l)	2.4.2, 9.1	7.2, 7.3, 9.1
13. Quality Assurance				
13. Quality Assurance	1.III.5 Quality Assurance	10CFR72.24 (n) 10CFR72, Subpart G	13.0	--
	13.III Regulatory Requirements	10CFR72.24 10CFR72 Subpart G		

Notes to Table 1.0-1:

"--" There is no corresponding NUREG-1536 criteria, no applicable 10CFR72 or 10CFR20 regulatory requirement, or the item is not addressed in the particular FSAR.

"NA" There is no Regulatory Guide 3.61 section that corresponds to the NUREG-1536, 10CFR72, or 10CFR20 requirement being addressed.

(1) Transportation performance of the FuelSolutions™ canisters is evaluated in a separate transportation license application.

(2) The stated requirement is the responsibility of the licensee (i.e., utility) as part of the ISFSI and is therefore not addressed in this application.

(3) The stated requirement is not applicable to the FuelSolutions™ Storage System. The functional adequacy of all important to safety components is demonstrated by analysis and/or previously licensed designs.

(4) The stated requirement is not applicable to the FuelSolutions™ Storage System. No monitoring is required for accident conditions.

1.1 Introduction

The FuelSolutions™ SFMS is a fully integrated, canister-based system that provides for the storage and transport of a broad range of SNF assembly classes. The FuelSolutions™ SFMS is designed to be suitable for the vast majority of commercial reactor sites in the contiguous United States. The FuelSolutions™ SFMS is also designed to be suitable for the U.S. Department of Energy's (DOE) Centralized Interim Storage Facility (CISF) and the Mined Geologic Disposal Site (MGDS). In addition, it is suitable for use at private CISFs.

The FuelSolutions™ SFMS is comprised of four basic system components. These components can be used in a variety of ways to satisfy a particular licensee's requirements throughout the life of the plant and ISFSI. Together with site-specific support equipment, loaded FuelSolutions™ canisters may be transferred vertically or horizontally. A synopsis for each of the four basic components of the FuelSolutions™ SFMS is as follows:

1. A *FuelSolutions™ Canister* is designed for dry storage of SNF in accordance with 10CFR72 and for transportation of SNF in accordance with 10CFR71. The canister is placed in an overpack cask for fuel loading, closure, transfer, on-site storage, and off-site transport. It provides confinement for storage, criticality control and passive heat removal for storage and transport, and biological shielding for closure and handling operations for the enclosed SNF. The canister interfaces are standardized to be compatible with each of the system cask components identified below. The various FuelSolutions™ canister designs are addressed in their respective FuelSolutions™ Canister Storage FSARs and in a separate transportation license application.
2. A *FuelSolutions™ W150 Storage Cask* provides passive vertical dry storage of a loaded canister in an on-site ISFSI or at an off-site CISF, in accordance with 10CFR72. The storage cask is capable of accommodating both vertical or horizontal canister transfer to the transfer cask or transportation cask. It provides biological shielding, structural protection, and passive convective heat removal for the enclosed canister and SNF. For horizontal canister transfer, the storage cask impact limiter is used. The FuelSolutions™ W150 Storage Cask and impact limiter are addressed in this FSAR.
3. A *FuelSolutions™ W100 Transfer Cask* provides canister loading, closure, and handling capability, in accordance with 10CFR50 and 10CFR72. The transfer cask has the capability to be used in the following operational modes:
   a. Loading or unloading of a canister with SNF in a spent fuel pool, in a cask receiving area using a fuel assembly transfer cask and shielded loading collar, or in a shielded hot cell.
   b. Vertical transfer of a sealed canister to or from a FuelSolutions™ W150 Storage Cask inside the plant's fuel building or a licensed cask handling facility.
   c. Horizontal transfer of a sealed canister to or from a FuelSolutions™ W150 Storage Cask within an ISFSI or the licensee's owner-controlled area.
   d. Vertical transfer of a sealed canister to or from a transportation cask inside the plant's fuel building or a licensed cask handling facility.

e. Horizontal transfer of a sealed canister to or from a transportation cask within an ISFSI or the licensee's owner-controlled area.

The FuelSolutions™ W100 Transfer Cask provides biological shielding, structural protection, and passive heat removal for the enclosed canister and SNF. The transfer cask is addressed in this FSAR.

4. A suitable transportation cask with impact limiters are designed and licensed in accordance with 10CFR71 and are used for off-site shipment of a FuelSolutions™ canister. The transportation cask can be used to load or unload a canister with SNF in a spent fuel pool or in a shielded hot cell. The transportation cask can also be used to transfer a sealed canister to and from either the storage cask or the transfer cask. It provides containment, structural protection, biological shielding, and passive heat removal for the enclosed canister and SNF. The transportation cask and impact limiters are addressed in a separate transportation license application.

FuelSolutions™ Storage Cask and Transfer Cask Description. Key criteria and features of the FuelSolutions™ W150 Storage Cask and W100 Transfer Cask designs are as follows:

Storage Cask

- The FuelSolutions™ W150 Storage Cask is a vertical storage overpack of modular precast, reinforced concrete construction, which is suitable for use at an ISFSI or CISF, in accordance with 10CFR72.
- Cooling of the storage cask is provided by passive natural convection driven by the spent fuel decay heat.
- Primary biological shielding and structural protection for the canister is provided by the massive reinforced concrete of the storage cask.
- The storage cask reinforced concrete is designed and analyzed in accordance with the applicable provisions of ACI-349[7] and constructed using standard commercial practices, in accordance with the applicable provisions of ACI-318.[8]
- The storage cask structural steel is designed and analyzed in accordance with ANSI/AISC N690[9] and fabricated in accordance with AISC[10] and AWS D1.1.[11]
- All support equipment used for storage cask handling operations is designed in accordance with applicable standards for commercial grade heavy industrial equipment.

[7] ACI 349-90, *Code Requirements for Nuclear Related Concrete Structures and Commentary,* American Concrete Institute.

[8] ACI 318-89, *Building Code Requirements for Reinforced Concrete,* American Concrete Institute.

[9] ANSI/AISC N690-1984, *Nuclear Facilities Steel Safety-Related Structures for Design Fabrication and Erection*, American Institute of Steel Construction, Inc., Chicago, Illinois.

[10] AISC, *Manual of Steel Construction*, American Institute of Steel Construction, Ninth Edition.

[11] AWS D1.1-96, *Structural Welding Code - Steel*, American Welding Society.

- The storage cask impact limiter is used when the storage cask is upended or downended for horizontal canister transfer.
- The confinement boundary for dry storage is provided by a sealed FuelSolutions™ canister, as described in each FuelSolutions™ Canister Storage FSAR.

The design of the FuelSolutions™ W150 Storage Cask is described further in Section 1.2.1.1.

Transfer Cask

- The FuelSolutions™ W100 Transfer Cask is a lead-shielded stainless steel cask that is suitable for use in the plant's fuel building, in accordance with 10CFR50, and at an ISFSI, CISF, or licensed cask handling facility, in accordance with 10CFR72.
- Primary biological shielding and structural protection for the canister is provided by the composite stainless steel and lead of the transfer cask.
- The transfer cask uses a liquid neutron shield that envelops its cylindrical body and solid neutron absorbing material in its top and bottom covers.
- A cask cavity axial spacer is used to accommodate a short-length FuelSolutions™ canister.
- The transfer cask is designed, analyzed, and fabricated in accordance with the applicable provisions of American Society of Mechanical Engineers (ASME) Code Section III, Subsection NF.[12]
- The transfer cask upper lifting trunnions are designed, analyzed, fabricated, and tested in accordance with NUREG-0612[13] and ANSI N14.6.[14] The associated cask lifting yoke(s) is also designed, analyzed, fabricated, and tested as a special lifting device, in accordance with NUREG-0612 and ANSI N14.6.
- All support equipment used for transfer cask handling operations, excluding the lifting yoke, is designed, fabricated, and tested in accordance with applicable standards for commercial grade heavy industrial equipment.
- The confinement boundary for dry storage is provided by a sealed FuelSolutions™ canister, as described in each FuelSolutions™ Canister Storage FSAR.

The design of the FuelSolutions™ W100 Transfer Cask is described further in Section 1.2.1.2. The cask cavity axial spacer and transfer cask lifting yoke are described further in Section 1.2.1.4.4.

[12] American Society of Mechanical Engineers (ASME) Boiler and Pressure Vessel Code, Section III, Division 1, Subsection NF, *Component Supports*, 1995 Edition.

[13] NUREG-0612, *Control of Heavy Loads at Nuclear Power Plants*, U.S. Nuclear Regulatory Commission, 1980.

[14] ANSI N14.6, *Special Lifting Devices for Shipping Containers Weighing 10,000 lbs (4500 kg) or More*, American National Standards Institute, 1993.

FuelSolutions™ Storage System Operations Overview. The principal FuelSolutions™ Storage System operations performed under the plant's 10CFR50 license or a stand-alone storage facility's 10CFR72 license, in accordance with the FuelSolutions™ Storage System C of C are as follows:

- A FuelSolutions™ canister is wet loaded with SNF in a spent fuel pool using conventional methods, while within the FuelSolutions™ W100 Transfer Cask.
- Alternatively, a FuelSolutions™ canister (e.g., the FuelSolutions™ W74 canister[15]) may be loaded with SNF while within a FuelSolutions™ W100 Transfer Cask outside the spent fuel pool, but inside the plant's fuel building, using a fuel assembly shuttle cask and a shielded loading collar. The operations for this alternative canister loading method are described in the respective FuelSolutions™ Canister Storage FSARs.
- Following fuel loading, the canister is vacuum dried and helium backfilled using conventional methods. Canister seal welding uses remote automated welding equipment.
- A sealed FuelSolutions™ canister is transferred vertically to or from a FuelSolutions™ W150 Storage Cask or a transportation cask, using a FuelSolutions™ W100 Transfer Cask inside the plant's (or CISF's) cask receiving bay or a licensed cask handling facility.
- Alternatively, a sealed FuelSolutions™ canister can be transferred horizontally to or from a FuelSolutions™ W150 Storage Cask, using a FuelSolutions™ W100 Transfer Cask or a transportation cask within an ISFSI or CISF, or the licensee's owner-controlled area.
- A sealed FuelSolutions™ canister can also be transferred horizontally to or from a transportation cask, using a FuelSolutions™ W100 Transfer Cask within an ISFSI or CISF, or the licensee's owner-controlled area.
- The FuelSolutions™ canister is stored vertically in a FuelSolutions™ W150 Storage Cask at an ISFSI or CISF.

The operation of the FuelSolutions™ Storage System is described further in Section 1.2.2.

Spent Fuel to be Stored. The FuelSolutions™ SFMS is designed to accommodate essentially all U.S. commercial intact, Zircaloy-clad, light water reactor SNF assemblies. SNF assembly acceptance specifications and the corresponding bases for the structural, thermal, radiological, and criticality safety evaluations are provided in this FSAR and the respective FuelSolutions™ Canister Storage FSARs. The contents of the FuelSolutions™ canister are discussed further in Section 1.2.3 of this FSAR.

The FuelSolutions™ SFMS, as designed, will also accommodate failed fuel, stainless clad fuel, mixed oxide (MOX) fuel and consolidated fuel. The corresponding payload specifications for these contents is included in the respective FuelSolutions™ Canister Storage FSARs and in a separate transportation license application.

[15] WSNF-223, *FuelSolutions™ W74 Canister Storage Final Safety Analysis Report*, Docket No. 72-1026, Energy*Solutions* SFD.

1.2 General Descriptions

The FuelSolutions™ Storage System consists of the components and equipment that provide for the on-site handling, transfer, and dry storage of SNF in canisters. The primary components of the FuelSolutions™ Storage System areas follows:

- Storage Cask (long and short)
- Transfer Cask (with cask cavity axial spacer for short canisters)
- Canister (with fuel assembly spacers for some SNF assembly classes)

The support equipment for the FuelSolutions™ Storage System varies according to site-specific needs and may include:

- Canister Closure/Opening Equipment
  - Annulus Seal
  - Shield Plug Retainers
  - Vacuum Drying System
  - Inner Closure Plate Strongback
  - Automated Welding/Opening System
  - Helium Leak Detector
- Equipment for Horizontal Canister Transfer Only
  - Horizontal Transfer Trailer
  - Horizontal Transfer Skid
  - Hydraulic Ram System
  - Upender/Downender
  - Storage Cask Impact Limiter
  - Horizontal Lid Handling Fixture
- Equipment for Vertical Canister Transfer Only
  - Vertical Transporter
  - Vertical Transport Trailer
  - Air Pallet System
  - Vertical Canister Lift Fixture
- Common Equipment for Horizontal and Vertical Canister Transfer
  - Cask Lifting Yoke
  - Cask Cavity Axial Spacer
  - Docking Collar
  - Cask Restraints
  - Empty Canister Lift Fixture
  - Standard Lifting Slings

A schematic of the FuelSolutions™ SFMS components and equipment, including those associated with the FuelSolutions™ Storage System, is shown in Figure 1.2-1. The FuelSolutions™ Storage System components that are classified as important to safety are also

identified in Figure 1.2-1. The ISFSI pad is classified as not important to safety. However, if supplemental engineered features (e.g., earth berms or masonry shield walls) are used for dose mitigation, these features are considered important to safety and must be evaluated by the licensee to determine the applicable graded QA category. The information presented in this section addresses the major design features and characteristics of each FuelSolutions™ Storage System component. A description of the associated support equipment is also provided.

1.2.1 FuelSolutions™ Storage System Characteristics

1.2.1.1 FuelSolutions™ W150 Storage Cask

The FuelSolutions™ storage cask, shown in Figure 1.2-2, is constructed from standard reinforced concrete and is designed to be manufactured in three segments. The choices of materials used in the construction of the storage cask provide long-life, require no replacement, and minimize periodic maintenance. The storage cask can be disassembled for re-use at another ISFSI or CISF, or for disposal at the time of decommissioning. The principal characteristics of the storage cask are summarized in Table 1.2-1.

Design Characteristics

The FuelSolutions™ W150 Storage Cask design consists of a modular concrete structure with three cylindrical segments and a steel and concrete cover at the top end. Incorporated within the cavity of the storage cask are a thick steel liner, a metallic thermal shield, and hardened steel guide rails to center the canister and provide bearing surfaces during canister transfer operations. The cask stores long and short FuelSolutions™ canisters (described in Section 1.2.1.3) by varying only the length of the middle storage cask segment and tie rods. The storage cask is shown in Figure 1.2-2. Drawings are provided in Section 1.5.1.1.

The FuelSolutions™ storage cask contains vent openings to allow air to flow in at the base of the cask via natural convection, rise upward through the annulus between the canister and the thermal shield and between the thermal shield and concrete wall, and flow out through the vent openings near the top end of the cask. This convective air flow dissipates the decay heat generated within the canister. The thermal shield reduces storage cask concrete temperatures due to thermal radiation. The inlet and outlet vents have protective screens to prevent debris or wildlife from entering the ventilation ducts.

The top cover of the FuelSolutions™ storage cask is designed to be handled with the cask in a horizontal or vertical orientation. The cover is bolted and includes a tamper-indicating device to assure integrity and security of the storage cask during normal, off-normal, and accident conditions. The bottom end of the storage cask is designed to facilitate the attachment of the hydraulic ram assembly used to horizontally transfer the canister to and from the transfer cask or transportation cask. Additionally, the upper end of the storage cask is designed to accept a docking collar in order to provide a positive mating surface with the bottom end of the transfer cask, in vertical and horizontal orientations, and the top end of the transportation cask in the horizontal orientation. The docking collar simplifies the process of alignment and provides shielding to maintain operational dose rates ALARA during canister transfer operations.

The storage cask bottom segment includes four inlet vents that converge into a single cylindrical inlet duct at the bottom center of the cask cavity. The center inlet duct also provides hydraulic ram access during horizontal canister transfer operations. The canister is supported vertically off the bottom of the storage cask cavity by corrosion-resistant steel tubes arranged radially for minimum air flow resistance. The canister shell and support tube material selections eliminate the possibility of galvanic corrosion between the interfacing surfaces.

Eight high-strength, full-length tie rods are used to secure the precast segments of the storage cask together. A shear key between each concrete segment provides positive lateral engagement and alignment, and also serves to minimize radiation streaming. The tie rods are tensioned to assure that the storage cask concrete segments remain fully engaged during handling operations and when subjected to other design basis loadings.

Vertical lifting lugs are provided for attachment to the tie rods at the top of the storage cask. These vertical lifting lugs allow the storage cask to be handled with the vertical transporter or the upender/downender described in Section 1.2.1.4.

The docking collar is secured to the storage cask by use of two of the tie rods. Cask restraints connect to the docking collar (see Figure 1.2-3) and are used to bind the storage cask to the transfer cask or transportation cask trunnions. The cask restraints prevent cask separation during horizontal canister transfer. The restraints may optionally be used to provide stability during vertical canister transfer (see Figure 1.2-4).

Alignment marks are provided on the storage cask to allow alignment with the transfer cask or transportation cask prior to horizontal canister transfer. This is accomplished by using a standard survey transit, which is used to systematically align the cask horizontally and vertically, as shown in Figure 1.2-5. Additionally, the storage cask top cover is punch marked at the 0° azimuth to assure proper installation.

A nameplate is attached to the storage cask and contains the following information:

- Model number
- Serial number
- Empty weight.

Additional optional information may also be added to the nameplate (e.g., maximum loaded weight, canister serial number, loading date, C of C number, or manufacturer).

Construction and Assembly Features

The FuelSolutions™ W150 Storage Cask segments are designed using accepted methods for nuclear-related reinforced concrete structures in accordance with the applicable provisions of ACI-349. They are constructed using standard commercial practices in accordance with the applicable provisions of ACI-318, as discussed in Section 2.1.2. The concrete storage cask is designed to be manufactured in three segments. This modular approach allows fabrication of precast concrete segments in a controlled off-site environment and results in improved quality fabrication controls (especially in a multi-unit fabrication campaign), while also providing for on-site fabrication, if desired or required. The storage cask construction and assembly features allow storage casks to be disassembled for decommissioning or for re-use at other ISFSI or CISF sites. Inspections required for re-use are described in Section 9.1.2 of this FSAR.

The three-segment, modular storage cask is designed to be manufactured off-site and transported to the licensee's site for assembly using normal heavy-haul transport methods. The design is suitable for fabrication by using metal forms and standard construction practices. The steel liner also serves as the inner form for casting of the storage cask segments. Experienced precast concrete fabricators will be used for fabricating the storage cask segments. The storage cask precast segments can also be constructed on-site. Each concrete segment is manufactured using reinforced concrete with an average density of 143 lb/cu ft and a minimum compressive strength of 5000 psi. Materials and services will be procured in compliance with an approved QA program, as discussed in Chapter 13 of this FSAR.

The storage cask top cover, guide rails, tie rods, support tubes, and other structural steel members are fabricated from corrosion-resistant materials (i.e., stainless steel, coated carbon steel, etc.), in accordance with American Institute of Steel Construction (AISC) code. The segmented guide rails internal to the storage cask may be installed and aligned following manufacture of the storage cask segments to simplify field assembly.

The segmented FuelSolutions™ storage cask is designed to be assembled at the licensee's site with a moderate-size crane. The individual concrete segments each weigh approximately 85,000 pounds and have embedded inserts for lifting during assembly. The storage cask segments can be assembled in a staging area using a construction crane, assembled directly in the plant's cask receiving bay using the cask-handling crane, or directly assembled in place on the ISFSI or CISF storage pad using a gantry-lifting frame.

Assembly of the storage cask begins with placement of the bottom segment. The middle segment is aligned and placed on top of the bottom segment by lowering the segment into place. Grout is installed between the keyed joint to provide a more uniform bearing surface. The grout is also used to provide a durable weather barrier between the storage cask segments. This sequence is repeated for the installation of the top segment. After assembly of the three storage cask segments, the eight tie rods are installed and tensioned. The full-length thermal shield sub-assemblies are then installed and final rail installation and/or alignment is performed.

The disassembly of the storage cask following canister removal is accomplished by reversing the assembly process described above. The storage cask is designed for long-term durability and enables future disassembly to take place with a minimum amount of degradation to the cask. Storage cask decommissioning is discussed further in Section 14.1 of this FSAR.

Physical Dimensions

The FuelSolutions™ W150 Storage Cask is designed to accommodate both long and short FuelSolutions™ canister designs. The long and short canister lengths are accommodated by using two different lengths for the middle concrete segment. The maximum loaded weight of the long storage cask containing the heaviest canister is approximately 334,000 lbs.

The overall nominal height of the long storage cask is 230 inches (19'-2"). The overall nominal height of the short storage cask is 220 inches (18'-4"). The outside diameter of the concrete storage cask is nominally 138 inches (11'-6"). The internal cavity of the storage cask, formed by the steel liner on each cylindrical segment, has a nominal diameter of 73 inches, with nominal lengths of 193 inches for the long cask design and 183 inches for the short cask design. The storage cask segment nominal wall thickness is 32.5 inches, which includes a 2.0-inch thick steel liner and the reinforced concrete.

The top cover assembly has a nominal thickness of 14.3 inches and is constructed using a steel plate, with encased concrete backing provided for shielding. The top cover steel plate has a nominal diameter of 78.5 inches, and the concrete in the top cover has a nominal diameter of 66.0 inches.

Additional FuelSolutions™ W150 Storage Cask materials and dimensional information is provided in Table 1.2-1 and shown on the drawings contained in Section 1.5.1.1 of this FSAR.

Structural Capabilities

The FuelSolutions™ W150 Storage Cask is designed for all design basis normal, off-normal, postulated accident, and natural phenomena condition loadings, as defined in Section 2.3 of this FSAR. These include dead weight, handling loads, canister transfer loads, thermal expansion, accidental drop and tip-over loads, vent blockage, and a range of environmental phenomena. The thick reinforced concrete segments of the storage cask are designed to maintain biological shielding and to provide structural protection for the canister and SNF assemblies when subjected to the design basis loadings. The high strength, full-length tie rods are designed to join the storage cask concrete segments together as a unit for all handling operations and when subjected to the full range of design basis loadings. Similarly, the thick steel and concrete storage cask top cover is designed to resist the design basis loadings and provide structural protection for the canister and SNF. The internal guide rails are designed to carry the maximum loadings that occur during horizontal canister transfer operations and to facilitate air flow, as discussed below.

The structural performance of the FuelSolutions™ W150 Storage Cask is discussed further in Chapter 3 of this FSAR.

Heat Removal Capabilities

The FuelSolutions™ W150 Storage Cask design incorporates passive natural convective cooling to maintain fuel cladding temperatures within allowable values inside the canister. The thermal shield and convective cooling flow through the storage cask also minimizes the decay heat transferred to the storage cask concrete segments, thereby maintaining the temperatures of the concrete below allowable values.

The vertical orientation of the storage cask and canister allows the heated air within the storage cask to flow upward through the annular cavity and out the air outlet vents. The natural convection airflow, along with the annular thermal shield, allows the cask to provide sufficient heat removal for the wide range of SNF it is designed to store.

The storage cask is oriented horizontally for short periods of time during horizontal canister transfer operations. With reduced natural convection airflow in the horizontal orientation, if the storage cask containing a loaded canister remains in the horizontal orientation for a longer than normal period of time due to an unanticipated equipment malfunction, the storage cask temperature monitoring system is used to assure that temperatures remain within acceptable values.

Although not required to assure safe operation of the storage cask, temperature monitoring instrumentation is provided. The monitoring system includes two thermocouple probes located at mid-height, with one thermocouple on the outside surface of the steel liner at the steel-concrete interface and the other at mid-thickness of the concrete wall. The thermocouples used for the

storage cask temperature monitoring system are passive devices that are inherently reliable. The storage cask temperature monitoring system is designed so that defective or damaged thermocouples can be easily removed and replaced. A terminal box with a hand-held digital temperature readout and recording instrument is used. The temperature data recorder is calibrated prior to first use and then periodically in accordance with the licensee's program for calibrated equipment to assure accurate measurements. The storage cask temperature monitoring system provides direct measurement of the storage cask steel liner (and indirectly the canister shell), and the concrete bulk temperature, to verify system performance.

Several design features are incorporated into the storage cask to provide assurance that temperatures are maintained within their allowable values. The key thermal design features include the following:

- A centering guide rail system is used to maintain uniform separation between the canister and the storage cask wall, thereby forming an approximately axisymmetric air flow annulus for convective heat removal through the cavity.
- A thermal shield is provided in the annulus formed by the storage cask wall and the canister to reduce heat transfer by thermal radiation to the concrete wall. The thermal shield is designed to re-radiate heat back to the flow annulus and reduce radiation heat transfer to the steel liner and into the concrete wall of the storage cask.
- The size and configuration of the vent ducts and flow annulus through the storage cask are designed to minimize expansion, contraction, and frictional flow pressure losses for the passive air flow through the cask. By minimizing these flow losses, the air flow rates through the storage cask are maximized, resulting in greater convective heat removal at lower differential air temperatures.

The thermal performance of the FuelSolutions™ W150 Storage Cask is further discussed in Chapter 4 of this FSAR.

Shielding and Radiation Protection

The FuelSolutions™ W150 Storage Cask is designed with ALARA principles in mind. The steel liner and concrete wall thicknesses provide satisfactory shielding for the wide range of SNF, while maintaining the size and weight of the storage cask within practical limits for handling. The top flange of the storage cask incorporates a steel shield ring for shielding the annulus between the canister and storage cask cavity. The storage cask air outlet vent duct flow path is off-set to prevent direct radiation streaming through the vent when the canister is in place. Temporary shield blocks may be installed in the air outlets during transfer operations to minimize occupational exposure.

The storage cask design incorporates substantial biological shielding that adequately attenuates dose rates at the surface, to facilitate compliance with regulatory dose limits at the ISFSI site boundary. The confinement boundary for the FuelSolutions™ storage cask is provided by the sealed FuelSolutions™ canister. Confinement is discussed in Chapter 7 of this FSAR and in Section 7.1 of the respective FuelSolutions™ Canister Storage FSARs.

Contamination control is maintained by sealing and inerting the canister and by implementing rigorous controls to assure that the outside surface of the canister does not become contaminated by pool water during fuel loading. Since the storage cask does not come in contact with pool

water and natural convection ventilation air does not contact non-fixed or loose radiological contamination, storage cask surface contamination and airborne contamination at the ISFSI is avoided.

The shielding performance of the FuelSolutions™ W150 Storage Cask is discussed further in Chapter 5 of this FSAR. The ALARA features and sample ISFSI site doses are discussed in Chapter 10 of this FSAR.

1.2.1.2 FuelSolutions™ W100 Transfer Cask

The FuelSolutions™ W100 Transfer Cask, shown in Figure 1.2-6, is a right circular cylindrical vessel with covers on both ends. It is designed to support a variety of FuelSolutions™ canister transfer operations. The transfer cask is used to handle canisters during canister fuel loading, canister closure, and on-site transport operations. It also provides the capability for transferring loaded canisters to or from the storage cask or transportation cask in a horizontal or vertical orientation. The methods for canister transfer are generally described as follows:

- Using the horizontal canister transfer method, the bottom end of the transfer cask is docked horizontally with the top end of the storage cask (which has been positioned horizontally) or transportation cask. The canister is then transferred using the hydraulic ram. The equipment that supports the horizontal transfer of canisters using the transfer cask is described in Section 1.2.1.4.2 of this FSAR.
- Using the vertical canister transfer method, the transfer cask is docked with the top end of the storage cask or the transportation cask, and the loaded canister is transferred using the vertical lift fixture. The equipment that supports the vertical transfer of canisters using the transfer cask is described is Section 1.2.1.4.3 of this FSAR.

The principal characteristics of the transfer cask are summarized in Table 1.2-1. Additional discussion of canister transfer operations is provided in Section 1.2.2 of this FSAR.

Design Characteristics

The FuelSolutions™ W100 Transfer Cask is comprised of a stainless steel inner liner and an outer structural shell, with lead gamma shielding in the annular space between them. A neutron shield, consisting of an outer jacket forming an annular cavity that is filled with water, surrounds the structural shell. The structural shell of the transfer cask is sized to accommodate localized loads from the lifting trunnions and other design basis loadings. In order to maintain the weight of the loaded transfer cask at less than 100 tons, the neutron shield cavity may be emptied for operations in the spent fuel pool and refilled after the loaded cask is placed in the decontamination area. All exposed surfaces of the transfer cask are polished stainless steel to ease decontamination. Low friction, hardened-steel rails are welded to the inner shell cavity to facilitate horizontal canister transfer.

Unlike the storage cask, only one cavity length design is provided for the transfer cask. The transfer cask internal cavity accommodates the long and short canister designs. When a short FuelSolutions™ canister is loaded, a cask cavity axial spacer is installed at the bottom of the transfer cask cavity (see Figure 1.2-7). This cask cavity spacer bolts onto the inside of the transfer cask bottom cover and is handled together with the bottom cover to simplify canister transfer operations.

The ends of the transfer cask body include forged flanges that are welded to the structural shell and inner liner. The upper lifting trunnions are welded to the structural shell and inner liner. The lower trunnions used for upending and downending the transfer cask are welded to the structural shell. The covers at each end of the cask are bolted to the flanges, providing access to the cask cavity from either end.

The bottom cover consists of a thick plate and solid neutron shielding encased in a shell. O-rings provide a seal between the transfer cask bottom flange and the bottom cover. The O-rings are suitable for an operating pressure well above the maximum hydrostatic pressure that typically occurs in the bottom of spent fuel pools. The O-rings prevent leakage of spent fuel pool water into the clean cask cavity during canister fuel loading, thereby preventing contamination of the exterior surface of the canister. The bottom cover is equipped with alignment pins and bolts to facilitate its vertical and horizontal installation on the transfer cask. Threaded holes are provided on the inside of the bottom cover for attachment of the cask axial spacer, when a short FuelSolutions™ canister is loaded. These holes may also be used for horizontal handling of the bottom cover. Threaded plugs can be provided to fill these holes when they are not in use. Threaded holes are also provided on the outside edge, to allow attachment of lifting devices for bottom cover handling.

The top cover is similar to the bottom cover, except that it includes a two-piece design with a primary top cover assembly and a central ram access cover assembly. The ram access cover is normally bolted to the top cover. The ram access cover assembly is designed to be removed during horizontal canister transfer operations, providing access for the hydraulic ram that is used to transfer the loaded canister to or from the storage cask or transportation cask. The top cover does not require an O-ring, since the cover is removed for canister fuel loading and closure operations. Alignment pins are provided to simplify horizontal or vertical installation of the top cover and ram access cover. Threaded holes are provided on the top surface and outer edge, to allow attachment of lifting devices for vertical and horizontal handling of the top cover and ram access cover.

The transfer cask neutron shield cavity is designed as a pressure vessel for the maximum internal pressure that occurs during hot conditions when the shield is filled, and for the maximum external pressure that occurs when the shield is empty and submerged in the spent fuel pool. The penetrations in the neutron shield cavity consist of two quick-connect fittings, which are used to fill and drain liquid from the shield when the cask is in the horizontal position, and one additional vent, which is used with the two quick-connect fittings when the cask is in the vertical position. This assures leak tightness to prevent the intrusion of contaminated water into the transfer cask cavity. A pressure relief device is used to provide over-pressure protection for the neutron shield. The neutron shield is filled with clean demineralized water. The use of propylene glycol is avoided to alleviate the generation of mixed waste. Cask temperatures are monitored to assure that the neutron shield does not freeze during cold conditions.

To avoid contamination of the canister external surface and the inner surface of the transfer cask cavity, the annulus between the canister shell and inner liner of the transfer cask is filled with clean demineralized water and an inflatable seal is placed in the top of the annulus prior to submergence of the transfer cask into the spent fuel pool. The top end of the transfer cask cavity includes a recess to accommodate the inflatable seal. The annulus seal is inflated to a pressure that exceeds the hydrostatic pressure, which the seal is typically subjected to in the spent fuel

pool. Annulus vent and drain connections are provided to facilitate filling and subsequent draining of the annulus water. The transfer cask annulus seal and upper annulus port are shown in Figure 1.2-8.

The capability is also provided to maintain the annulus and neutron shield water pressures higher than that of the spent fuel pool water column with the use of static head tanks and tubing connected to the transfer cask cavity and neutron shield vent fittings. It is recommended that the licensee invoke these measures in order to provide further assurance that contaminated pool water does not enter the transfer cask-canister annulus or neutron shield cavity. Following canister fuel loading, a check of the canister outer surface is conducted to verify that non-fixed contamination levels are below acceptable limits.

Two upper trunnions are provided near the top end of the transfer cask and separated by 180° for vertical cask handling operations. A non-redundant, lifting yoke that is designed as a special lifting device for critical lifts is used for handling the transfer cask. The transfer cask upper trunnions, including their associated attachment welds to the structural shell and inner liner are also designed, fabricated, and load tested as a special lifting device, in accordance with ANSI N14.6, NUREG-0612, and NUREG-1536. The balance of the transfer cask is designed and fabricated as an ASME Section III, Subsection NF, Class 1 component support rather than a special lifting device consistent with its design function. Two trunnions near the bottom end of the transfer cask, separated by 180°, are provided for cask upending/downending operations onto the transfer skid and transfer cask trailer and are not used for critical lifts. The lower trunnions are off-set from the cask centerline to assure the cask center of gravity acts to rotate the cask downward, when the cask is lowered from vertical to horizontal. The transfer cask upper and lower trunnions are fitted with replaceable hardened wearing surfaces so that the load bearing portions of the trunnion are not damaged during repeated upending/downending operations.

The transfer cask upper trunnions have removable yoke retainer plates for the inner and outer shoulders. Normally, only the outer shoulder retainer plates are installed. However, the inner shoulder retainer plates may be installed if plant conditions require that the lifting yoke engages the inner shoulders of the trunnion.

Alignment marks are provided on the transfer cask to allow alignment of the transfer cask with the storage cask or transportation cask to facilitate horizontal canister transfer. Additionally, the transfer cask top and bottom flanges, top and bottom covers, and the ram access cover are punch-marked at the 0° azimuth to assure proper installation. The transfer cask body may be labeled with nameplate information including the cask model number, C of C number, serial number, empty weight, and maximum loaded weight.

Physical Dimensions and Parameters

The hook weight of the FuelSolutions™ W100 Transfer Cask is less than 100 tons when it contains a flooded FuelSolutions™ canister fully loaded with SNF, a flooded cask/canister annulus, an empty neutron shield, and no top cover assembly. (See Table 2.0-1 for transfer cask lifting and handling weight summaries.) The liquid neutron shield on the transfer cask may be drained during spent fuel pool loading operations to reduce weight or to eliminate the potential for contamination of the fuel pool with liquid from the neutron shield. Sufficient neutron shielding is provided by the water within the canister cavity and the transfer cask annulus prior to draining the canister. If the loaded transfer cask weight is not limiting due to a lower weight

canister or fuel assembly type or increased plant crane capacity, the liquid neutron shield may be filled prior to placement in the spent fuel pool.

The transfer cask has a nominal outside diameter of 84.9 inches, excluding the trunnions, and a nominal overall length of 209 inches with the top, bottom, and ram access covers installed. The internal cavity of the transfer cask has a nominal diameter of 67 inches and a nominal length of 192.75 inches, when both covers are installed. Additional FuelSolutions™ W100 Transfer Cask materials and dimensional information is provided in Table 1.2-1 and shown on the drawings contained in Section 1.5.1.2.

Structural Capabilities

The FuelSolutions™ W100 Transfer Cask is designed for all design basis normal, off-normal, postulated accident, and natural phenomena condition loadings, as defined in Section 2.3 of this FSAR. These include dead weight, handling loads, canister transfer loads, thermal expansion, accidental drop loads, and a range of environmental phenomena. The structural shell, lead shielding, and inner liner of the transfer cask are designed to maintain biological shielding and to provide structural protection for the canister and SNF during canister-handling operations and when subjected to the design basis loadings. The transfer cask upper trunnions are designed for critical lifts when handling a fully loaded cask in the plant's fuel building. Similarly, the transfer cask upper and lower trunnions are designed to support the cask during all canister transfer operations. The transfer cask top and bottom covers are designed to meet the design basis loadings and to provide structural protection and biological shielding for the canister confinement boundary and SNF assemblies. The inner liner and guide rails are designed to carry the maximum loadings that occur during horizontal canister transfer operations.

The structural performance of the FuelSolutions™ W100 Transfer Cask is discussed further in Chapter 3 of this FSAR.

Heat Removal Capabilities

Heat removal from the FuelSolutions™ W100 Transfer Cask is accomplished primarily by conduction through the walls of the cask. In addition, the liquid in the neutron shield facilitates heat conduction and convection to maintain fuel cladding and structural component temperatures within allowable values. An expansion bottle is provided to limit the buildup of pressure in the liquid neutron shield due to thermal expansion. The outer surface of the liquid neutron shield jacket is provided with a high emissivity, low absorptivity coating to enhance radiation heat transfer from the cask while minimizing the effects of insolation.

The transfer cask is also equipped with a thermocouple probe that is attached to the outer surface of the transfer cask structural shell at mid-height of the cask. This thermocouple is used to monitor the cask temperatures following canister closure operations to provide a direct indication that system temperatures are within acceptable values.

During canister reflooding and opening operations, the canister shell can be cooled within the transfer cask by circulating clean water through the annulus between the transfer cask and the canister shell. Recirculation and cooling of the water is accomplished by plant make-up cooling water. Cooling water flow is directed through the transfer cask drain and vent connections located near the top and bottom ends of the cask. The cask port locations are offset

circumferentially by 180° to provide increased water circulation. Additionally, an auxiliary drain connection through the cask bottom cover may also be used.

The thermal performance of the FuelSolutions™ W100 Transfer Cask is discussed further in Chapter 4 of this FSAR.

Shielding and Radiation Protection

The design of the FuelSolutions W100 Transfer Cask uses fixed and drainable shielding components to provide the required gamma and neutron shielding for the various transfer cask operations, while meeting a maximum fuel building crane hook load capacity requirement of 100 tons. Additionally, shielded covers are used to facilitate transfer operations, while maintaining operational dose rates ALARA.

The transfer cask provides radial gamma shielding in the form of the steel inner liner and outer structural shell, a lead annulus between the inner liner and outer structural shell, and a liquid neutron shield. Radial neutron shielding is provided by water in the neutron shield annulus formed by the neutron shield jacket and the structural shell. Axial gamma shielding is provided by the steel in the cask top and bottom covers. Axial neutron shielding is provided by solid neutron shielding material in the covers.

The confinement boundary for all radioactive materials is provided by the sealed FuelSolutions™ canister rather than the FuelSolutions™ W100 Transfer Cask. Confinement is discussed in Chapter 7 of this FSAR and in Section 7.1 of the respective FuelSolutions™ Canister Storage FSARs. The shielding performance of the FuelSolutions™ W100 Transfer Cask is discussed in Chapter 5 of this FSAR.

1.2.1.3 FuelSolutions™ Canisters

The specific design characteristics of each FuelSolutions™ canister are addressed in their respective FuelSolutions™ Canister Storage FSAR. All canister external dimensions and maximum weights are standardized so that auxiliary support equipment, methods of handling, and the interfaces with the transportation system are consistent for the FuelSolutions™ family of canisters.

A typical FuelSolutions™ canister includes a shell assembly that provides for confinement of all radioactive materials and an internal basket assembly that provides geometric spacing and criticality control for the SNF assemblies. The most common mode of canister fuel loading is wet loading in the plant's spent fuel pool using the FuelSolutions™ transfer cask. The canister may also be wet loaded using a transportation cask or loaded outside the spent fuel pool with either of these casks using specialized equipment (specialized equipment for out-of-pool canister loading is discussed in the respective FuelSolutions™ Canister Storage FSARs, if used). The canister is provided with vent, drain, leak test, and instrument ports to facilitate canister draining, drying, backfilling, leak testing, and reflooding. All FuelSolutions™ canisters use redundant top closure plates and seal welds. In addition, all FuelSolutions™ canisters use top and bottom end shield plugs. The canisters are designed to be handled and transferred either horizontally or vertically to or from the storage cask or transportation cask using the transfer cask. The canister bottom end shield plug provides sufficient shielding to facilitate removal of the transfer cask bottom cover for canister transfer, while maintaining occupational exposures ALARA.

1.2.1.4 FuelSolutions™ Support Equipment

The FuelSolutions™ SFMS support equipment used to facilitate canister loading, closure, and transfer operations is shown schematically in Figure 1.2-1 and described in the sections that follow. Generally, this equipment is commercial grade equipment designed for high reliability in a heavy industrial environment. Although this equipment is not generally classified as important to safety or safety related, calibration and preoperational testing of some equipment is performed to assure proper interface with system components and equipment that are classified as important to safety or safety related.

Descriptions of the FuelSolutions™ support equipment are provided here for information to facilitate an understanding of FuelSolutions™ Storage System operations, and the basic design features of this equipment and their interfaces with the canisters, transfer cask, and storage cask. The support equipment described herein, or alternative equivalent equipment, may be used consistent with the design basis for the FuelSolutions™ components and equipment that are classified as important to safety or safety related. The selection and suitability of the support equipment to be used for a particular plant is necessarily site-specific. The use of support equipment to perform the FuelSolutions™ SFMS operations depicted herein is to be evaluated by the licensee on a site-specific basis.

The support equipment general arrangement for horizontal canister transfer is shown in Figure 1.2-9. The two support equipment general arrangements for vertical canister transfer are shown in Figure 1.2-10 and Figure 1.2-11.

1.2.1.4.1 Canister Closure/Opening Equipment

Annulus Seal

The annulus seal, shown in Figure 1.2-8, is an inflatable, oblong, elastomeric tube that is installed at the top end of the annulus between the canister shell and inner surface of the transfer cask top flange. The seal prevents spent fuel pool water from radiologically contaminating the outside surface of the canister and the inside surface of the transfer cask during canister fuel loading operations. The seal is designed for inflation pressures that exceed the hydrostatic pressure the seal is subjected to in the spent fuel pool.

The transfer cask/canister annulus is filled with clean demineralized water prior to placement of the transfer cask and canister in the spent fuel pool. As an added measure, it is recommended that the water in the annulus be slightly pressurized with a head tank installed on the fuel pool operating floor above the level of the fuel pool water, and connected with a hose to the transfer cask annulus vent or drain connection. The annulus seal is designed to maintain its sealing capability when subjected to differential pressure. Pressurization of the annulus with the head tank provides additional assurance that in-leakage of contaminated fuel pool water to the transfer cask annulus is precluded.

Shield Plug Retainers

The shield plug retainers, shown in Figure 1.2-12, assure that the canister and the top shield plug remain in place during removal of the loaded canister from the spent fuel pool and placement in the cask decon area, in the unlikely event of a cask drop accident during handling operations. The shield plug retainers may be installed, at the discretion of the licensee, following installation

of an empty canister in the transfer cask or when the loaded transfer cask breaks the pool surface. The shield plug retainers are bolted to the transfer cask top flange and bear on the top surface of the canister shield plug as the loaded transfer cask is lifted from the fuel pool and moved to the decontamination area. The retainers are removed following disengagement of the lifting yoke from the transfer cask.

Vacuum Drying System

The Vacuum Drying System (VDS), shown in Figure 1.2-13, is used to perform liquid removal and vacuum-assisted drying of a sealed canister containing SNF. The VDS is designed to drain, vacuum dry, backfill with inert gas, and support leak testing of the canister following placement of the inner closure plate weld. The vacuum drying system consists of a dewatering pump, a vacuum skid, interconnecting piping, and process control instrumentation.

The dewatering pump is used for draining and initially evacuating the canister. The pump is equipped with a water volume gauge that provides a measure of the amount of water removed from the FuelSolutions™ canister. A small amount of water is removed from the canister using the VDS liquid pump prior to beginning welding operations. This is done to facilitate welding of the inner closure plate to the canister shell. The remaining water in the canister is then removed by pressurizing the canister cavity with non-combustible inert gas, once the inner closure plate weld is completed and the strongback is installed.

The vacuum skid consists of a vacuum pump, interconnecting piping, and instrumentation with quick-connect fittings. The VDS vacuum pump is used to remove the residual water volume, which is typically a few gallons or less from the canister. The VDS uses a dry vacuum pump with a minimum free displacement and an ultimate vacuum capacity sufficient to achieve the desired canister vacuum. The vacuum pump is a non-contact/oil-free, dry pump that is capable of handling limited slugs of water without damaging the impeller or casing/seals. Fluids are excluded from the pumping chamber by use of nitrogen-purged hydrodynamic seals. The vacuum pump heat removal system consists of an air-cooled water chiller circulating a glycol/water solution through the vacuum pump in a closed-loop system. A compound vacuum pressure gauge is used to monitor gross changes in canister pressure, while an electronic vacuum gauge is used to monitor the canister under higher vacuums. Valves and gauges are located to allow each of the components and gauges to be isolated for calibration testing and trouble-shooting. Provisions are also included for a clean demineralized water flush, for decontamination of all hardware exposed to spent fuel pool water.

Inner Closure Plate Strongback

The inner closure plate strongback, shown in Figure 1.2-14, is used to provide supplementary support for the FuelSolutions™ canister inner closure plate during canister drain-down and helium leak testing. The strongback allows for pressurization of the canister to expedite removal of water from the canister cavity following welding of the inner closure plate to the canister shell.

The inner closure plate strongback consists of structural steel members that bolt to the transfer cask flange and that bear on the auxiliary shield plate of the automated welding system, which in turn bears on the canister's inner closure plate during canister draining and helium leak testing.

Automated Welding/Opening System

The automated welding/opening system (AW/OS), shown in Figure 1.2-15, is designed to perform machine welding of the canister closure welds, including the inner closure plate, vent and drain port covers, and the outer closure plate. Additionally, the AW/OS provides the capability to remove the canister closure plates prior to fuel unloading operations. The AW/OS, in combination with an auxiliary shield plate that acts as its mounting base, significantly reduces occupational exposure during canister welding operations, consistent with ALARA principles. The AW/OS system facilitates remote machine welding and allows manual welding for small or restricted areas and any repairs.

The AW/OS is typically remotely operated. Two separate gas tungsten arc weld (GTAW) head modules are connected to a single programmable controller. One welding head is used to make the inner and outer closure plate-to-canister shell welds and the other is used to make the inner closure plate-to-vent and drain port body welds and the vent and drain port cover welds. The combination of process flexibility and equipment capability permits welding parameters that minimize both distortion and cycle time.

For FuelSolutions™ canister closure plate removal, a plasma arc torch is mounted on the same torch manipulator system used for welding. The remotely operated equipment used for welding is also used for cutting of the inner and outer closure plate-to-canister shell welds. During the cutting of these welds, a metallic barrier is placed in the annulus between the canister and the transfer cask to protect the inner surface of the cask. A lead snake wrapped in fire-resistant cloth, or similar device, is also placed in the annulus for ALARA purposes and to prevent cutting dross from falling into the annulus.

A suction nozzle and hose assembly is mounted on the torch manipulator system to capture and remove smoke and fumes generated during the welding and cutting operations. This assembly can be connected to the plant's ventilation system or a High Efficiency Particulate Air (HEPA) filter unit.

Helium Leak Detector

The leak detection system consists of a helium sniffer probe and calibrated helium leak standards to detect very low concentrations of helium, in accordance with the requirements of ANSI N14.5.[16] The helium leak detector is a standard commercially available measuring instrument widely used for such applications. Following canister inner closure plate welding operations, the canister cavity is backfilled with pressurized helium and a leak test is performed. The leak detector is designed with sufficient sensitivity to provide the capability to detect and locate leaks in the canister inner closure plate welds to within acceptable limits.

[16] ANSI N14.5, A*merican National Standard for Leakage Tests on Packages for Shipment of Radioactive Materials*, American National Standards Institute, January 1987.

1.2.1.4.2 Equipment for Horizontal Canister Transfer

Horizontal Transfer Trailer

The horizontal transfer trailer, shown in Figure 1.2-16, is a multi-wheeled, hydraulically suspended heavy-haul industrial trailer suitable for use on paved roads. The primary functions of the horizontal transfer trailer are as follows:

- Transport the transfer cask or transportation cask into a plant's cask receiving bay for canister loading.
- Transport the loaded transfer cask from the plant's fuel building to the ISFSI, and position the cask for horizontal transfer of the canister into the storage cask.
- Transport the empty transfer cask or transportation cask to the ISFSI for canister retrieval.
- Transport the loaded transportation cask to an on-site rail siding.

The trailer has pneumatic brakes and can be used on grades with a suitable heavy haul tow vehicle. Each set of wheels is steerable to increase the trailer's maneuverability and to minimize its turning radius. Four double-acting hydraulic jacks are used to stabilize the trailer for cask handling operations. The jacks are also used to adjust the height of the trailer, for the alignment of the transfer cask with the storage cask, during horizontal canister transfer operations. When fully retracted, the jack bases are above the roadway when the wheel set suspensions are at their minimum suspension height. The transfer trailer is equipped with an optional on-board hydraulic power supply that provides hydraulic power to operate the stabilizing jacks, the transfer cask horizontal skid positioner, and the hydraulic ram system (discussed in the following sectional paragraphs).

Horizontal Transfer Skid

The horizontal transfer skid, shown in Figure 1.2-17, is a welded structural steel assembly that supports the transfer cask or transportation cask during horizontal canister transfer operations. The transfer skid is mounted to the deck of the horizontal transfer trailer, as shown in Figure 1.2-18. This skid provides a means to safely support and secure the transfer cask or transportation cask during on-site movement between the plant's fuel building and the ISFSI or on-site rail siding. A hydraulic skid positioning system, described below, interfaces with the transfer skid for the alignment of the transfer cask and storage cask for horizontal canister transfer operations. Hydraulic power is provided by a hydraulic power unit either mounted on the transfer trailer or skid-mounted as a separate unit.

When the transfer cask or transportation cask is placed on the horizontal transfer skid, as shown in Figure 1.2-19, it is engaged on the inner shoulders of the upper and lower trunnions, leaving access to the upper trunnion outer shoulders for lifting yoke engagement. Sufficient clearance is provided for handling between vertical and horizontal orientations, without interference with the cask's neutron shield or lifting yoke. The skid also secures the cask to the horizontal transfer trailer during movement of the trailer. The skid is easily removed from the trailer to facilitate other uses of the trailer or skid. The horizontal transfer skid has four lifting lugs for lifting both the skid and empty cask, if required, on or off of the transfer trailer and skid positioning system.

The skid positioning system provides the capability to align the transfer cask or transportation cask with the storage cask for canister transfer. The skid positioning system is permanently

mounted to the horizontal transfer trailer deck and supports the horizontal transfer skid on which the transfer cask or transportation cask is mounted.

The skid positioning system consists of a frame structure moved by lateral (side to side) and axial (fore/aft) hydraulic cylinders that enable it to translate and rotate horizontally relative to the mounting base. The frame is capable of lateral and axial adjustment to facilitate alignment. When in the trailer-towing position, the frame is immobilized by bolting (locking for safe transport).

Hydraulic Ram System

The hydraulic ram system, shown in Figure 1.2-20, includes a hydraulic cylinder, grapple, end plate, and pintle assembly. The hydraulic ram is used during horizontal canister transfer to push or pull the loaded canister between the storage cask and the transfer cask or transportation cask, or between the transfer cask and transportation cask, if necessary.

The hydraulic ram system uses a double acting, single or multi-stage telescoping hydraulic cylinder. This hydraulic cylinder provides a maximum push/pull force that is approximately equal to the maximum loaded canister weight. The force exerted by the ram is a function of the ram hydraulic pressure and cylinder/piston size (force = pressure x area). The hydraulic ram assembly is mounted to the bottom of the storage cask or top of the transfer cask and is aligned with the canister. The hydraulic ram system and the upender/downender may share a common hydraulic power supply since they are not used concurrently.

During horizontal transfer operations, the hydraulic ram pressure (load) is controlled using a hydraulic power unit. The ram hydraulic circuit pressures and flows are controlled by an arrangement of hydraulic pressure relief valves, isolation valves, automatic shut-off (pressure) switches, a flow control valve, and a calibrated pressure gauge. During normal horizontal canister transfer operations, these valves and switches, along with the visual indication provided by the pressure gauge, assure that the maximum normal operation loads will not be exceeded. If the hydraulic pressures rise unexpectedly, indicating a possible misalignment or stuck canister, the operator may use manual override controls to increase the hydraulic ram loads up to the maximum off-normal design load after rechecking the cask for proper alignment. The override controls incorporate secondary pressure relief valves and pressure switches for automatic shut-off to preclude the possibility of exceeding the maximum off-normal design load.

For normal horizontal transfer of a canister to a storage cask, a hydraulic ram is mounted on the top cover of a transfer cask and is used to push the canister into the storage cask. A ram end plate is attached to the hydraulic cylinder instead of a grapple for this purpose. The end plate pushes on the top of the canister outer closure plate. There is no need for attachment of the pintle to the canister for pushing. Similarly for canister retrieval from the storage cask into the transfer cask, the hydraulic ram with end plate is attached to the bottom of the storage cask and is used to push the canister into the transfer cask.

Alternatively, a grapple assembly is attached to the end of the hydraulic ram, as shown in Figure 1.2-20, and is used to engage the pintle plate mounted on the canister top end outer closure plate or the canister bottom end plate. The pintle plate is installed on the canister outer closure plate only for horizontal transfer by pulling rather than pushing the canister. The grapple assembly and pintle plate must be used for horizontal transfer of a canister to and from a

transportation cask, since pulling the canister is required for canister retrieval and for recovery from off-normal conditions during insertion.

If used, the pintle plate is fastened to the canister using high-strength captured bolts. Threaded counter-bores are provided on the canister top end outer closure plate and the canister bottom end plate for this purpose. The captured bolts include provisions to allow remote attachment using long-handled tools to maintain occupational exposures ALARA. The shield plugs on both ends of the canister provide shielding for this operation. A keyed interface is used between the grapple and pintle to allow remote engagement and to provide a secure connection.

Upender/Downender

The upender/downender (also known as a storage cask positioner), shown in Figure 1.2-21, is used for rotating a storage cask from a vertical to a horizontal orientation, for horizontal canister transfer operations, and back to a vertical orientation for canister storage. The upender/downender consists of a standard four-point gantry system and a J-skid that captures and supports the storage cask.

The upender/downender straddles and captures the storage cask, which is positioned in the area designated to perform horizontal canister transfer operations. The storage cask is lifted onto the J-skid using the four-point gantry towers and the lifting lugs connected to the storage cask tie rods ends. Alternatively, a recess in the concrete pad can be used so that the storage cask can be moved by air pallet directly onto the J-skid.

The upender/downender is designed for ease of assembly and disassembly. The four point gantry system, which provides the hydraulic lifting and rotating capabilities, consists of two pairs of telescoping hydraulic jacking towers with strongbacks and a track system. Such standard rigging equipment is typically used for handling and upending/downending large components and equipment (e.g., steam generators and station transformers). Connecting links are used to transfer the load from the J-skid to the four-point gantry towers. The system is designed to maintain the storage cask lifting heights within acceptable limits.

The J-skid, which is a built-up welded steel frame of heavy wide flange beams and cross members, captures and engages the storage cask for rotation by the gantry towers. This J-skid is also used to support the storage cask in the horizontal orientation during canister transfer. The J-skid has adjustable bearing pads that support each storage cask segment in four places. Such J-skids are typically used to handle and upend/downend large components (e.g., steam generators). The storage cask is secured to the J-skid by a series of Kevlar® straps. The J-skid beams provide a direct load path and an even bearing surface with a storage cask impact limiter for a postulated tip-over accident of the storage cask and J-skid during upending or downending of a loaded storage cask.

The four-point gantry towers are used to slowly rotate the J-skid and storage cask from vertical to horizontal, as shown in Figure 1.2-22, maintaining positive control of the load at all times. When the storage cask is horizontal, the four-point gantry towers are disengaged. The J-skid secures and aligns the storage cask during canister transfer operations. Alignment with the transfer cask or transportation cask with the storage cask is obtained by using the horizontal transfer skid positioning system. Horizontal transfer of the transfer cask to storage cask, and storage cask to transfer cask, are illustrated in Figure 1.2-23 and Figure 1.2-24, respectively.

Storage Cask Impact Limiter

The storage cask impact limiter is classified as important to safety and is used as an energy-absorbing pad assembly. This impact limiter is installed in a recessed area of the ISFSI pad, as shown in Figure 1.2-21, prior to upending or downending a loaded storage cask. The impact limiter provides an effective means to mitigate deceleration loads on the storage cask and canister resulting from a postulated tip-over accident of the storage cask and J-skid during upending or downending operations. The 10-foot wide by 30-foot long by 2-foot thick impact limiter is sized to cover the footprint of a downended storage cask and J-skid. The modular steel-encased polyurethane foam impact limiter consists of four subassemblies to facilitate handling and installation. Each subassembly is partitioned into 15-inch wide by 24-inch deep cells to facilitate uniform crush of the foam during impact of the J-skid.

The polyurethane foam material used for the storage cask impact limiter is widely used in licensed spent fuel transportation packages and is well characterized. Product literature for the polyurethane foam is provided in Section 1.5.2. The foam is encased with light-gauge sheet or thin-plate carbon steel, which is sufficiently strong to allow handling of the impact limiter subassemblies but has a negligible affect on the crush characteristics of the impact limiter. The carbon steel provides a sealed closure to assure foam integrity and is coated for corrosion protection. Following completion of storage cask loading or unloading operations, the impact limiter is removed and placed in a storage area, where it is protected from degradation due to exposure to the environment.

Horizontal Lid Handling Fixture

The horizontal lid handling fixture, as shown in Figure 1.2-25, is a lifting device used for the removal and installation of the FuelSolutions™ storage cask and transfer cask covers when these casks are in the horizontal orientation. The fixture is designed so that the storage cask covers hang vertically when suspended from the hook of a portable crane. The handling fixture is designed to accommodate the top cover of the storage cask and the bottom cover of the transfer cask with and without the cask cavity spacer installed. The horizontal lid handling fixture is not used for critical lifts in the plant's fuel building.

1.2.1.4.3 Equipment for Vertical Canister Transfer

Vertical Transporter

The storage cask vertical transporter, shown in Figure 1.2-26, is a wheeled or tracked transporter capable of moving an empty or loaded storage cask in the vertical position. The transporter can be self-propelled or towed by a suitable tow vehicle. The transporter is used to move a cask to and from a fuel building, and to and from an ISFSI. The transporter frame is U-shaped to allow direct engagement with the storage cask in its storage location at the ISFSI.

The vertical transporter is a mast-supported hydraulic lift system, which is used for similar lifting operations in numerous industrial applications. The masts are designed to support the fore, aft, and lateral components of the structural loads exerted via the cross beam during the lifting and transport operations. The vertical transporter engages the storage cask at the vertical lifting lugs installed on the top of the storage cask. Lifting of the storage cask is limited by the transporter's lift system, so as to not exceed allowable storage cask handling heights.

The vertical transporter has a braking system that is manually operated at a control station. The transporter is equipped with parking and emergency brakes suitable for stopping and holding the transporter's position over the operating terrain from the plant to the ISFSI.

Vertical Transport Trailer

As an alternative to the vertical transporter, a heavy-haul trailer may be used to move loaded storage casks from a fuel building to an ISFSI. The vertical transport trailer, shown in Figure 1.2-27, is a low profile heavy-haul trailer built to industry standards for commercial grade heavy industrial equipment. The trailer is towed by a suitable tow vehicle. The deck height of the trailer is designed such that allowable storage cask handling heights are not exceeded. The loaded storage cask is transferred from the trailer deck to an ISFSI pad using the air pallet system described below. Subsequent storage cask movement at the ISFSI is performed using the air pallet system.

Air Pallet System

As shown in Figure 1.2-28, the air pallet system is used to support the storage cask from the bottom and to allow the empty or loaded storage cask to be moved within a plant's cask receiving bay or an ISFSI storage pad. Four air pallets are inserted under the storage cask, one in each quadrant between the storage cask air inlet channels. When energized, the air pallets create a reduced friction surface, allowing the storage cask to be readily towed by a standard industrial forklift or similar vehicle. The cask may be secured to the tow vehicle by straps, as depicted in Figure 1.2-28.

To insert the air pallets, the storage cask must first be lifted a few inches using hydraulic jacks that are installed in the storage cask air inlet channels. Once the air pallets are inserted, the storage cask is lowered onto the air pallets and the jacks are removed. Alternatively, the jacks can be removed after lifting the storage cask with the air pallets. The air pallets are energized by a standard high volume portable air compressor. When energized, the air pallets raise the storage cask a few inches.

After the storage cask has been towed to its storage location, the jacks are again installed, the air pallets are de-energized and removed, the cask is lowered, and the jacks are removed. Use of the air pallet system requires removal and subsequent reinstallation of the air inlet protective screens to provide access for jack assembly installation. If the vertical transporter (discussed previously) is used, the need for the air pallet system at the ISFSI is optional.

Vertical Canister Lift Fixture

The canister vertical lift fixtures, shown in Figure 1.2-10 and Figure 1.2-11, are classified as safety-related and are used to transfer the loaded canister vertically from the transfer cask to the storage cask or transportation cask inside the plant's fuel building under the licensee's 10CFR50 license. Either of two alternative types of canister vertical lift fixture may be used, depending on plant conditions. Both canister vertical lift fixture types are designed, fabricated, and tested as a special lifting device, in accordance with NUREG-0612 and ANSI N14.6 requirements for critical lifts.

The first type of canister vertical lift fixture is used in plants with limited crane and fuel building headroom. In addition, this canister vertical lift fixture provides the means to lower the canister, while maintaining positive lifting yoke engagement with the transfer cask upper trunnions,

which provides additional lateral stability. The lift fixture shown in Figure 1.2-10 consists of a canister lift adapter and redundant chain hoists, which are attached to the cask lifting yoke and the top end of the canister. The canister lift adapter is a built-up welded strongback that is bolted to the canister outer closure plate at the sixteen threaded counter-bore locations. The canister lift adapter is pinned to each of the two chain hoists, which in turn are pinned to the lift beams of the cask lifting yoke. The lift adapter has a self-leveling feature that assures equal load sharing by each chain hoist. Lift restraints that bolt to the transfer cask top flange are used to provide mechanical stops during canister lifting operations.

Following canister closure operations and prior to transfer cask vertical docking with the storage cask or transportation cask, the vertical lifting fixture is installed as shown in Figure 1.2-29. Concurrently with this operation, the transfer cask bottom cover bolts are disengaged. The cask lifting yoke is engaged with the transfer cask lifting trunnions, and the vertical lift fixture chain hoists are actuated to raise the canister slightly off the transfer cask bottom cover and verify positive canister control. The transfer cask is then lifted with the yoke positioned just above the storage cask or transportation cask. The canister bottom end shield plug provides sufficient shielding to facilitate removal of the transfer cask bottom cover for cask handling, while maintaining occupational exposures ALARA. The transfer cask is then docked with the storage or transportation cask. The vertical lifting fixture chain hoists are then actuated to slowly lower the canister into the storage cask or transportation cask cavity. Using long-handled tools or a remotely actuated clevis pin, the chain hoists are disengaged from the canister lift adapter. After removal of the transfer cask, the canister lift adapter is removed from the canister.

A second type of canister vertical lift fixture can be used when adequate crane and fuel building headroom exists. This alternate vertical lift fixture, shown in Figure 1.2-11, consists of a canister lift adapter, a transfer cask top end beam, and a canister lifting extension link. The associated canister lift adapter incorporates lifting lugs and coupling lugs, and is bolted to the canister outer closure plate in the same manner. The transfer cask top end beam, with its coupling lugs, is bolted to the transfer cask top flange. During transfer cask lifting with the bottom cover removed, the canister lift adapter and transfer cask top end beam are coupled using pins through the coupling lugs. This supports the weight of the canister within the transfer cask and allows the loaded transfer cask to be handled with the transfer cask lifting yoke. Operations of the alternate canister vertical lift fixture are shown in Figure 1.2-30.

Following docking with the storage cask prior to vertical canister transfer, cask restraints are attached between the transfer cask lower trunnions and the storage cask to provide lateral stability. This allows the lifting yoke to be disengaged from the transfer cask upper trunnions, freeing the plant crane for connection to the canister lifting extension link. The lifting extension link is then pinned to the lifting lugs of the canister lift adapter. The canister lift adapter and transfer cask top end beam coupling pins are disengaged to allow vertical transfer of the canister using the plant crane. Following vertical transfer, the canister lift extension link is disengaged and the transfer cask is removed using the cask lifting yoke.

1.2.1.4.4 Common Equipment for Horizontal or Vertical Canister Transfer

Cask Lifting Yoke

The cask lifting yoke assembly is classified as safety-related and is used for the vertical lifting, handling, and upending/downending of a FuelSolutions™ transfer cask using a plant's cask handling crane inside the fuel building under the plant's 10CFR50 license.

One type of lifting yoke is shown in Figure 1.2-31. The lifting yoke assembly includes a steel A-frame and two pneumatically actuated lifting arms. Shackles and low stretch slings are used to secure the lifting yoke to the crane hook. The lifting yoke assembly arms interface with the transfer cask upper trunnions, which are spread using the pneumatic actuators. The lifting yoke is designed, fabricated, and tested as a non-redundant special lifting device for critical lifts, in accordance with NUREG-0612 and ANSI N14.6.

As an alternative to the lifting yoke described above, a conventional open J-hook yoke may be used at sites where the additional yoke size and weight are permitted or where passive yoke engagement is desired. The cask J-hook lifting yoke is shown in Figure 1.2-32. This yoke is also designed, fabricated, and tested as a non-redundant special lifting device for critical lifts, in accordance with NUREG-0612 and ANSI N14.6. Both types of lifting yokes incorporate adjustable lifting cables attached to the lift beam or frame. The cables are used to rig the canister shield plug to the canister, as shown in Figure 1.2-31 and Figure 1.2-32.

Cask Cavity Axial Spacer

The cask cavity axial spacer is shown in Figure 1.2-7. The cask spacer is used in the bottom end of the FuelSolutions™ W100 Transfer Cask or a transportation cask cavity when a short canister is placed inside the cask, to take up the axial space in the cask cavity and provide positive support for the canister. The cask spacer is mounted to the inside of the transfer cask bottom cover to simplify removal during horizontal transfer operations.

Docking Collar

Two different docking collar designs are used to provide shielding during vertical and horizontal canister transfer operations. One type of collar is used to interface a storage cask with a transfer cask or transportation cask. A second type of docking collar is used during transfer operations between a transfer cask and a transportation cask. An illustration of a docking collar is provided in Figure 1.2-3.

A storage cask docking collar is a large shielded ring placed on the top end of a storage cask cavity for canister transfer operations to or from the storage cask. The inside diameter of a docking collar allows close fit-up with a transfer cask or a transportation cask, while allowing the transfer cask or transportation cask to dock directly to the storage cask upper shield ring.

A storage cask docking collar is attached to the storage cask at the tie rod ends. The cask restraints (described below) attach to a docking collar and the transfer cask lower trunnions or to the transportation cask upper trunnions.

In addition to shielding, the docking collar used for canister transfers between the transfer cask and transportation cask provides a mating surface for the transfer cask bottom flange and the transportation cask top flange, and provides attachment points for the cask restraints.

Cask Restraints

Cask restraints, shown in Figure 1.2-4, are used to prevent cask separation during canister transfers. During horizontal transfer, the cask restraints secure the transfer cask to the storage cask or transportation cask. For vertical canister transfer, the cask restraints may be installed as an added measure whenever the transfer cask remains engaged with the lifting yoke and the plant crane. When the transfer cask is not engaged with the lifting yoke and the plant crane, then the cask restraints must be installed.

The cask restraints attach the transfer cask lower trunnions or transportation cask upper trunnions to the storage cask docking collar on both sides of the cask. Since the transfer cask lower trunnions and transportation cask upper trunnions are not identical, separate cask restraints are provided for each when docking with a storage cask. A separate set of cask restraints are also used to secure the transfer cask to the transportation cask. These restraints link the transfer cask lower trunnions to the transportation cask upper trunnions. The transfer cask lower trunnions are provided with a circular shear recess and bolt pattern to accept the cask restraint.

Empty Canister Lift Fixture

The empty canister vertical lift fixture, shown in Figure 1.2-33, is classified as safety related for handling of the empty canister, when required within the plant's fuel building, under the licensee's 10CFR50 license. Handling of the empty canister in itself is not considered safety related; however, conditions and movement within the fuel building may require this classification. The empty canister, including the shell and basket assembly, is lifted vertically from the top shield plug support ring and placed into the transfer cask prior to fuel loading. The vertical lift fixture engages the bottom of the shield plug support ring in four locations and is connected to the plant's crane by four cable assemblies. Two of the cable assemblies allow for adjustment of the load and to maintain vertical alignment. The empty canister vertical lift fixture is fabricated and tested as a special lifting device in accordance with NUREG-0612 and ANSI N14-6 requirements for critical lifts.

Standard Lifting Slings

Standard lifting slings are use to support system operations for the handling or various items associated with the FuelSolutions™ canisters, storage cask, transfer cask, and support equipment. The slings consist of standard wire rope, chains, or straps and the associated standard lifting hardware such as shackles, clevises, lifting eyes, hooks, and turn buckles. The lifting slings that are used for critical lifts in the plant's fuel building are designed and load tested in accordance with the NUREG-0612 and ANSI N14.6 commitments for the plant.

1.2.2 Operational Features

This section provides an overview of the FuelSolutions™ Storage System operations, including the FuelSolutions™ W150 Storage Cask and W100 Transfer Cask. Generic FuelSolutions™ SFMS operating procedures are provided in Chapter 8 of this FSAR. Operating procedures that are unique to a particular canister design are provided in the respective FuelSolutions™ Canister Storage FSAR. Key operational features of the FuelSolutions™ Storage System components are listed below, followed by subsections summarizing storage system operations.

Storage Cask

The FuelSolutions™ storage cask design incorporates several features that facilitate transfer of the canister between a storage cask and a transfer or transportation cask. These features include:

- The storage cask is designed to be loaded or unloaded with a sealed canister in either a horizontal or vertical orientation.
- The storage cask top end opening is designed to interface with the bottom end of a transfer cask or the top end of the transportation cask through the use of a docking collar.
- Hardened steel guide rails within the storage cask cavity provide a bearing surface during horizontal canister transfer, and act to "center" a canister during vertical storage. These guide rails are used to support the canister during horizontal transfers and are constructed of a low-friction, high-durability material.
- A bolted cover on the top end of the storage cask and an access opening on the bottom end of the storage cask allow canister transfer directly to a transfer or transportation cask.
- The tie rod ends on the upper end of the storage cask allow installation of lifting lugs for lifting and handling the empty or loaded storage cask with the vertical transporter or upender/downender. These tie rod ends are also used for attachment of the docking collar.
- Cask restraints are attached between the storage cask docking collar and the transfer cask or transportation cask during horizontal canister transfer operations.
- Air inlet channels provide access for hydraulic jacks to allow installation and removal of the air pallet system, when it is used for movement of an empty or loaded storage cask.

Transfer Cask

The transfer cask is designed to facilitate transfer of canisters to and from a storage cask or a transportation cask. The following features are incorporated in the design of the transfer cask to provide alternative methods for loading and transfer of canisters:

- The transfer cask top and bottom cover plates are removable to facilitate horizontal and vertical canister transfer from or to either the storage cask or the transportation cask.
- The top cover of the transfer cask is designed with a ram access cover that allows transfer operations to be performed without removing the entire cover, minimizing occupational exposure.
- The covers of the transfer cask include features to facilitate horizontal handling, which simplify operations and minimize the corresponding occupational exposure.
- The upper and lower ends of the transfer cask are designed to promote easy alignment and centering with the storage cask or transportation cask during canister transfer operations.
- Hardened steel guide rails within the storage cask cavity provide a bearing surface during horizontal canister transfer. These guide rails are used to support the canister during transfers and are constructed of a low-friction, high-durability material.
- Exposed transfer cask surfaces are polished stainless steel to ease cask decontamination operations.

Canister

The FuelSolutions™ canister designs incorporate several design features that facilitate canister transfer between a transfer cask and a storage cask or transportation cask. The key operational features of the FuelSolutions™ canisters are discussed further in the applicable FuelSolutions™ Canister Storage FSARs.

1.2.2.1 Canister Loading

The FuelSolutions™ canister is typically loaded in a spent fuel pool using either a transfer cask or a transportation cask consistent with the plant's crane capacity. These operations are shown in Figure 1.2-34 and discussed in Section 8.1 of this FSAR. Using a transfer cask as an example, the basic operations are as follows:

- Remove the transfer cask top cover, install the cask cavity axial spacer (if required for a short canister), and insert the empty canister, without the top end shield plug or closure plates, into the transfer cask cavity.
- Fill the canister cavity with spent fuel pool water and the annulus between the transfer cask and canister with clean demineralized water. Install the inflatable annulus seal.
- Lower the transfer cask with the empty canister into the spent fuel pool using the cask lifting yoke. Vertically load the SNF assemblies into the canister guide tubes using standard plant fuel handling procedures.
- Insert the canister shield plug, remove the transfer cask from the pool using the cask lifting yoke, engage the shield plug retainers, then move and place the cask in the decontamination area.
- If not already full, fill the cask neutron shield with clean demineralized water and decontaminate the cask exterior and canister shell weld prep exposed surfaces.

1.2.2.2 Canister Closure/Opening

Canister Closure

After canister fuel loading operations, the loaded transfer cask is typically staged in the cask decontamination area for canister draining, drying, inerting, and sealing operations. These operations are shown in Figure 1.2-34 and discussed in Section 8.1 of this FSAR. The basic operations are as follows:

- Mount the automated welder to the inner closure plate and install the inner closure plate above the shield plug.
- Adjust the canister water level for welding, remove the annulus seal, and install a protective barrier over the annulus to prevent weld debris from entering the annulus.
- Check for combustible gases (e.g., hydrogen) and purge the canister with a non-combustible inert gas (e.g., argon), if required. Monitor the canister water temperature using the thermocouple inserted through the vent port.
- Weld the inner closure plate to the canister shell and the vent/drain port bodies.

- Perform a dye penetrant inspection (root and final surface) of the inner closure plate seal welds to the canister shell and vent/drain port bodies.
- Install the inner closure plate strongback and fully drain the canister cavity by pressurizing the canister with dry inert gas (e.g., helium).
- Dry the canister using the vacuum drying system.
- Backfill the canister with helium and perform a final pneumatic pressure test and a helium leak test.
- Vent and re-inert the canister by backfilling it with helium. Weld the vent and drain port covers to the vent and drain port bodies.
- Perform a dye-penetrant inspection (final surface) of the vent and drain port cover welds.
- Mount the automated welder to the outer closure plate and install the outer closure plate on top of the inner closure plate.
- Weld the outer closure plate to the canister shell.
- Perform a dye-penetrant inspection (root, intermediate, and final surface) of the outer closure plate weld to the canister shell. Alternatively, an ultrasonic examination of the outer closure plate weld may be performed.

Canister Opening

In the unlikely event that canister opening is required, the canister is retrieved from the storage cask into a transfer cask and staged in the cask decontamination area. These operations are shown in Figure 1.2-35 and discussed in Section 8.2 of this FSAR. The canister opening sequence involves reflooding the cavity with fuel pool water, removing the outer and inner closure plates, lowering the transfer cask into the fuel pool, removing the shield plug, and unloading SNF assemblies from the canister basket into the fuel pool storage racks. The basic operations are as follows:

- Slowly fill the annulus between the transfer cask and canister with clean demineralized water by using the transfer cask annulus ports.
- Install the inflatable annulus seal. Initiate recirculation of cooling water through the cask/canister annulus, as necessary, to supplement canister heat removal through the canister shell.
- Cut an access hole through the outer closure plate at the vent, drain, and instrument port scribed circles and remove the port covers.
- Vent the canister through the vent port fitting and collect a gas sample to check for indication of damaged fuel and combustible gas (licensee option).
- Remove the vent port fitting to increase the vent area and vent the canister to the fuel pool.
- Monitor the canister cavity temperature, via a thermocouple inserted into the canister through the vent port, to verify that canister temperatures are decreasing or remaining constant.
- Connect a pressure gauge to the instrument port.

- Slowly introduce fuel pool water into the drain line and fill the canister cavity. Closely monitor canister pressure at the instrument port pressure gauge.
- If necessary, reinitiate cask/canister annulus cooling until the canister cavity temperature is within an acceptable range to complete the filling operation without exceeding allowable canister pressures.
- Remove the outer and inner closure plates using the AW/OS.
- Place the transfer cask and canister in the spent fuel pool.
- Remove the shield plug and unload the SNF assemblies.

Fuel assembly removal operations are essentially the reverse of fuel loading operations, as described in Section 1.2.2.1.

1.2.2.3 Canister Horizontal Transfer

The FuelSolutions™ SFMS is designed for horizontal canister transfer between a transfer cask and a storage cask or transportation cask, and between a storage cask and a transportation cask. These operations are shown in Figure 1.2-36 and discussed in Section 8.1 of this FSAR. The basic operations for horizontal canister transfer from a transfer cask to a storage cask are as follows:

- Install the transfer cask lid.
- Using the cask lifting yoke, move the cask from the decontamination area and position over the transfer skid and trailer.
- Set the loaded transfer cask lower trunnions into the rear trunnion supports on the transfer skid and lower the transfer cask from vertical to horizontal.
- Secure the trunnions to the skid and pull the transfer trailer to the horizontal canister transfer area, typically at the ISFSI.
- Prior to transfer cask docking, install the storage cask impact limiter and downend the storage cask from vertical to horizontal using the upender/downender. After positioning the storage cask horizontally, remove the storage cask top cover and install the air vent shield plugs and docking collar.
- Back the loaded transfer trailer toward the top end of the storage cask.
- Remove the transfer cask bottom cover and cask cavity spacer (if installed). Dock and align the transfer cask with the storage cask and install the cask restraints (see Figure 1.2-5). Remove the transfer cask ram access cover and install the hydraulic ram on the transfer cask top cover.
- Actuate the hydraulic ram to slowly push the canister into the storage cask cavity. Retract the hydraulic ram, remove the cask restraints, undock the transfer cask from the storage cask, and remove the docking collar.
- Install the storage cask top cover.
- Upend the storage cask from horizontal to vertical with the upender/downender.

- Move the storage cask to its storage location on the ISFSI pad using the air pallets, if needed.
- Remove the air pallets and jacks.

Canister transfer from a storage cask to a transfer cask is nearly the reverse of that described above. For this case, the hydraulic ram is attached to the bottom end of the downended storage cask and the canister is pushed into the transfer cask. The transfer cask top cover and ram access cover remain installed. As an alternative, the canister top end pintle may be installed. The hydraulic ram with grapple is then attached to the top of the transfer cask, with the ram access cover removed. The hydraulic ram is actuated to engage the canister top end pintle and pull the canister into the transfer cask.

1.2.2.4 Canister Vertical Transfer

The FuelSolutions™ Storage System is designed for vertical canister transfer between a transfer cask and a storage cask, and between a transfer cask and a transportation cask. These operations are shown in Figure 1.2-37 and discussed in Section 8.2 of this FSAR. The basic operations are as follows:

- Position the transfer cask on a bottom lid support structure in order to provide access to the bottom cover bolts. Install the canister vertical lift fixture. Remove the transfer cask bottom cover bolts.
- Engage the transfer cask lifting yoke and actuate the canister vertical lift fixture to raise the canister slightly above the transfer cask bottom cover. This verifies proper lift fixture installation and removes the canister weight from the bottom cover.
- Prior to docking, position the storage cask into the plant (typically in the plant's cask receiving bay) using a trailer and air pallets. Remove the storage cask top cover and install the docking collar.
- Lift the transfer cask vertically off the bottom cover using the cask lifting yoke and move the transfer cask to a position above the storage cask.
- Dock the transfer cask with the top end of the storage cask. After docking, align the transfer cask and install the cask restraints (restraints are optional). The restraints are not required since the transfer cask remains supported, in part, by the plant crane via the lifting yoke.
- Actuate the canister vertical lift fixture to slowly lower the canister into the storage cask cavity. The transfer cask lifting yoke remains engaged with the transfer cask upper trunnions throughout the vertical transfer.
- Remove the transfer cask and docking collar. Install the storage cask top cover.
- Using the air pallet system, position the storage cask with the storage cask transporter (or on the transport trailer).
- Move the storage cask to the ISFSI.
- Using the air pallet system, remove the storage cask from the trailer (or transporter).
- Position the storage cask on the ISFSI pad.
- Remove the air pallet and jacking system from under the storage cask.

1.2.2.5 Storage

On-site canister storage with the FuelSolutions™ Storage System is accomplished by arranging freestanding vertical storage casks in arrays on an ISFSI pad. The empty storage cask precast concrete segments, top cover, and internal structural and ancillary steel are assembled using a yard crane or the plant's cask handling crane. The storage casks may be assembled in place on the storage pad, in the plant's cask receiving bay, or assembled in a staging area and moved using air pallets. The vertical transport trailer or transporter can also be used to move the empty storage casks.

For horizontal canister transfer operations at the ISFSI pad or another suitable area on the plant site, the air pallet system is used to position a storage cask in the upender/downender staging area with the storage cask impact limiter in place. For vertical canister transfer operations, the loaded storage cask is transported from the cask receiving bay to the ISFSI pad using a vertical transporter, transport trailer, or an air pallet system.

Periodic monitoring of the storage cask concrete temperature or periodic inspection of the storage cask vents screens are the only operations required during dry storage of FuelSolutions™ canisters.

1.2.2.6 Transportation Cask Loading

The transportation cask can be used to directly load canisters in a plant's spent fuel pool and to ship canisters off-site. Operational features related to direct transportation cask loading are discussed in a separate transportation license application.

Horizontal and vertical canister transfers between a transportation cask and a transfer cask are discussed in Sections 1.2.2.3 and 1.2.2.4, respectively. Direct vertical canister transfer between a transportation cask and storage cask is not possible since the bottom end of the transportation cask is not removable. Direct horizontal transfer between a transportation cask and a storage cask may be used, if handling of the loaded transportation cask is limited to the horizontal orientation until the cask is unloaded horizontally (otherwise the canister will be upside down in the cask when vertical). If handling of the loaded transportation cask in the vertical orientation is necessary, direct horizontal transfer between a transportation cask and a storage cask is not permitted. Horizontal and vertical canister transfer operations with the transportation cask are shown in Figure 1.2-38 and discussed in Section 8.2 of this FSAR. Horizontal transfer between a transportation cask and a storage cask is similar to operations with the transfer cask. The basic operations are as follows:

- Downend the storage cask.
- Attach the canister bottom end pintle on the canister bottom outer closure plate.
- Attach the hydraulic ram with grapple to the bottom end of the storage cask.
- Remove the storage cask top cover.
- Dock the top end of the transportation cask with the top end of the storage cask.
- Push the canister into the transportation cask.

If it is necessary to handle the loaded transportation cask in the vertical orientation, the canister is first retrieved from the storage cask using the transfer cask and then transferred horizontally from the transfer cask to the transportation cask.

1.2.2.7 Consideration of Human Error

The FuelSolutions™ Storage System design and operations incorporate the experience gained and the lessons learned from existing dry storage systems. The vast majority of system design features and operations have been successfully proven on other SNF storage and transportation systems and are known to result in high levels of both nuclear and occupational safety. In addition, a number of design features are incorporated into the FuelSolutions™ Storage System components, support equipment, and operations for the purpose of preventing or mitigating the consequences of potential human error. These include the following:

- Standardization of system components, component interfaces, and system operations suitable for implementation at all reactor sites. The number of site-specific issues to be addressed by the licensee is kept to a minimum.
- Component subassemblies and piece parts are standardized to the maximum extent possible so that fabrication practices and controls can be more easily codified.
- Qualification of SNF assemblies for dry storage is simplified. The licensee need only determine the required cooling time using the SNF cooling tables provided in the respective FuelSolutions™ Canister Storage FSAR for a given enrichment and burnup to assure that all system safety criteria is met.
- Comprehensive *technical specifications* are employed that are based on direct measurement of the safety parameter of interest (e.g., pressure or temperature).
- Consideration of man-machine interfaces are incorporated into the support equipment designs (e.g., automated welding system).

All FuelSolutions™ Storage System components and support equipment are robust and are designed, fabricated, and operated in accordance with the highest industry codes and standards under a rigorous QA program.

1.2.3 FuelSolutions™ Storage System Contents

The FuelSolutions™ SFMS is designed to accommodate essentially all U.S. commercial intact, zircaloy-clad, light water reactor SNF assemblies. The exceptions include the following, which are not accommodated at this time:

- Haddam Neck SNF assemblies,
- Indian Point 1 SNF assemblies,
- LaCrosse SNF assemblies,
- San Onofre 1 SNF assemblies,

- South Texas SNF assemblies,
- CE 16 x 16 and System 80 SNF assemblies with control components.

The design criteria for FuelSolutions™ Storage System contents are discussed further in Section 2.2 of this FSAR. The FuelSolutions™ canister payloads including the fuel assembly type, condition, quantity, enrichment, burnup, cooling time, other canister contents, and inert atmosphere requirements are addressed in the respective FuelSolutions™ Canister Storage FSARs.

The designs of the FuelSolutions™ W150 Storage Cask and W100 Transfer Cask are based on the bounding FuelSolutions™ canister dimensions and payload weights, and the thermal and radiological source terms defined in Section 2.2 that form the basis for the structural, thermal, and shielding safety analysis described in Chapters 3, 4, and 5 of this FSAR. Any FuelSolutions™ canister meeting these interface criteria is qualified to use the FuelSolutions™ W150 Storage Casks and W100 Transfer Cask.

Table 1.2-1 - Principal Characteristics of the FuelSolutions™ Storage and Transfer Casks

Characteristic	Storage Cask[1]	Transfer Cask[1]
Gross Weight	253,200 lbs. (Long)[2] 242,500 lbs. (Short)[2]	112,100 lbs.[2]
Materials of Construction[3]	Reinforced Concrete (RC) Carbon Steel (CS) Stainless Steel (SS)	Stainless Steel (SS)
Materials Used As Neutron Absorbers and Moderators[4]	RC[5] & Unreinforced Concrete[6]	Water[5] & RX-277[6] or NS-3[6]
External Dimensions	230 in. hgt. x 138 in. ∅ (Long) 220 in. hgt. x 138 in. ∅ (Short)	209 in. overall lgth. x 84.9 in. max. ∅ 200 in. upper flange elevation
Cavity Size	193 in. hgt. x 73 in. ∅ (Long)[7] 183 in. hgt. x 73 in. ∅ (Short)[7]	192.8 in. lgth. x 67.0 in. ∅
Internal Structures	FuelSolutions™ Canister with Internal Basket	
External Structures	N/A	N/A
Receptacles	N/A	N/A
Valves	N/A	Cavity Drain & Auxiliary Fittings
Sampling Ports	N/A	N/A
Means of Passive Heat Dissipation	Natural Circulation	Conduction
Volume of Coolant	N/A	76 cu. ft. (4,750 lbs.)[7]
Type of Coolant	N/A	Water[7]
Outer Protrusions	Tie Rod ends	Upper & Lower Trunnions
Inner Protrusions	Guide and Centering Rails Square Tube Supports Thermal Shield	Guide Rails
Lifting Devices	Tie Rods or Inlet Air Vents	Upper Trunnions
Impact Limiters	N/A[8]	N/A
Amount of Shielding (radial)[9]	Liner: 2 in. CS Cylindrical Wall: 30½ in. RC	Inner Liner: ¾ in. SS Gamma Shield: 3.45 in. Lead Structural Shell: 1-1/2 in. SS Neutron Shield (NS): 3 in. Water NS Shell: ¼ in. SS
Pressure Relief Systems	N/A	NS: 45 psig Pressure Relief Device[8]
Closures	Top: Bolted cover with weather sealant	Top: Bolted cover with ram access cover Bottom: Bolted cover with O-ring gaskets[10]
Means of Confinement	FuelSolutions ™ Canister	
Model Number	W150	W100
Description of How Individual Casks Will Be Identified	Individual Nameplates (see Section 9.1.2.7)	Individual Nameplates (see Section 9.1.3.7)

Notes:
(see next page)

Notes to Table 1.2-1:

Storage Cask Notes:

(1) All weights and dimensions are nominal.
(2) Without canister.
(3) Structural materials only.
(4) Excluding canister materials.
(5) Base & cylindrical wall.
(6) Top cover only.
(7) Top of 4 inch support tubes to bottom of top cover.
(8) Impact limiter incorporated into upending/downending system.
(9) Canister shell thickness not included.

Transfer Cask Notes:

(1) All weights and dimensions are nominal.
(2) Neutron shield filled, without canister, with top cover.
(3) Structural materials only.
(4) Excluding canister materials.
(5) Neutron shield liquid.
(6) Top and bottom covers.
(7) Neutron shield liquid provides passive heat conduction.
(8) Pressure relief device on liquid neutron shield.
(9) Canister shell thickness not included.
(10) Leak tightness for hydrostatic pressure during canister closure operations.

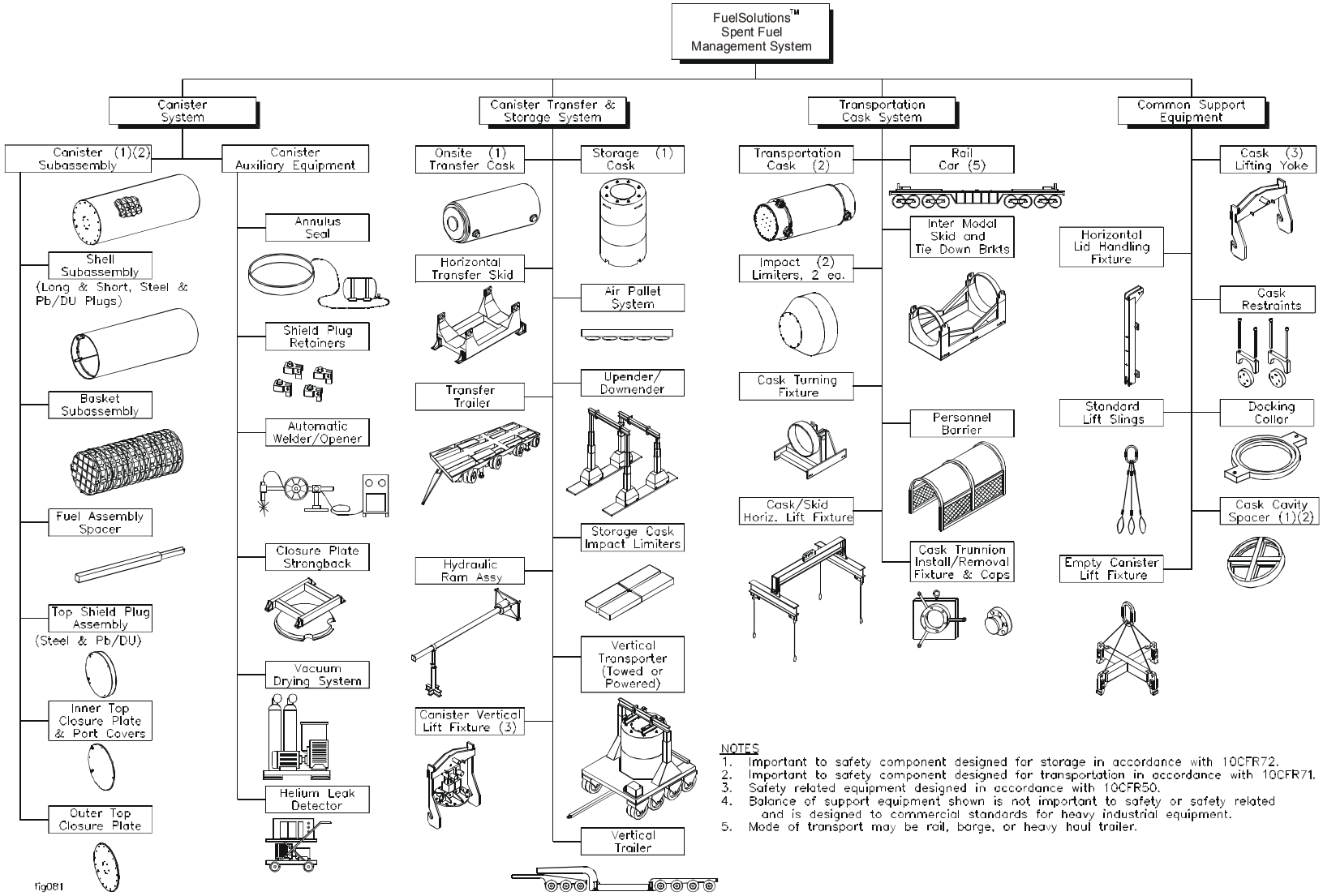

Figure 1.2-1 - FuelSolutions™ Spent Fuel Management System

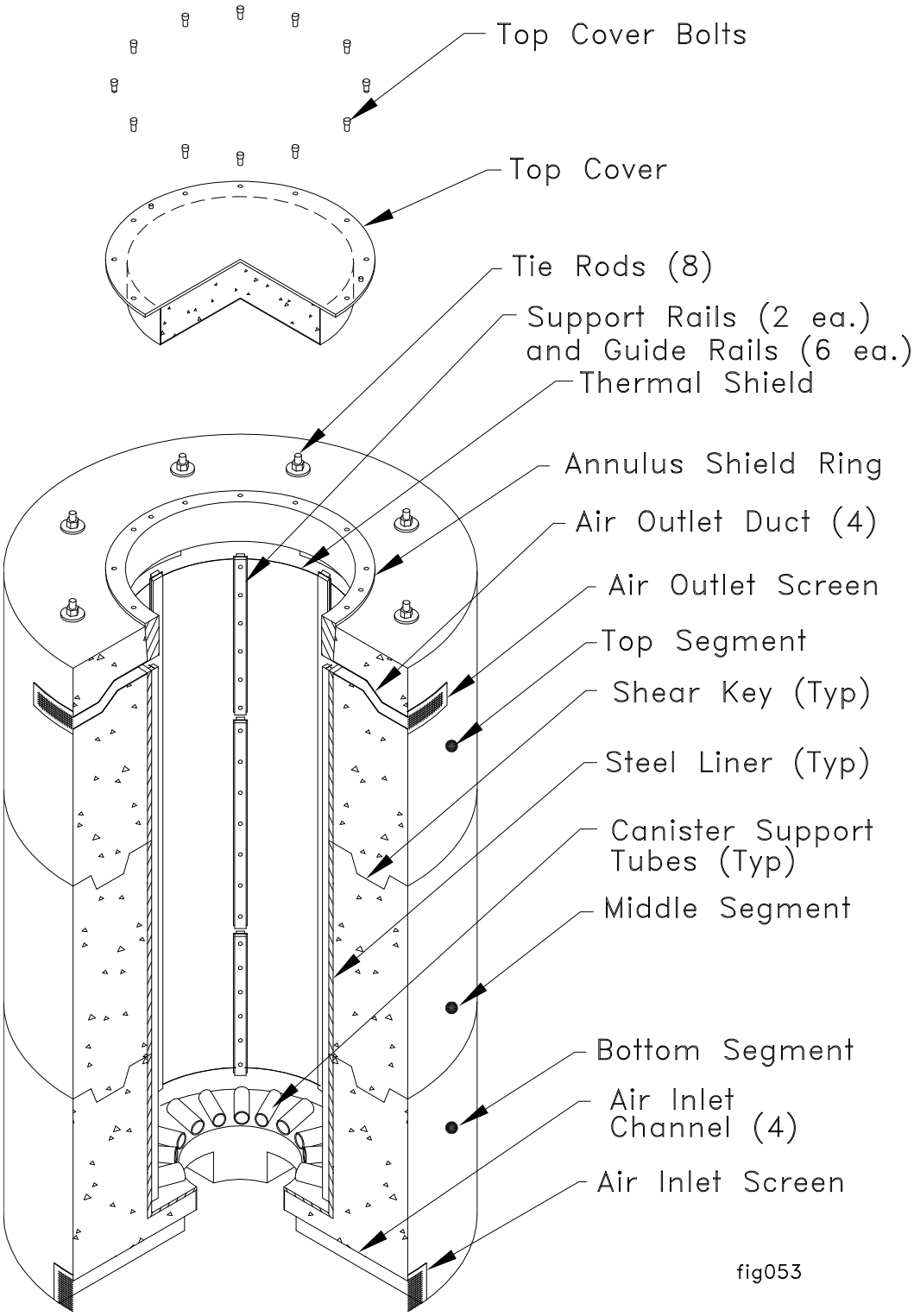

Figure 1.2-2 - FuelSolutions™ W150 Storage Cask

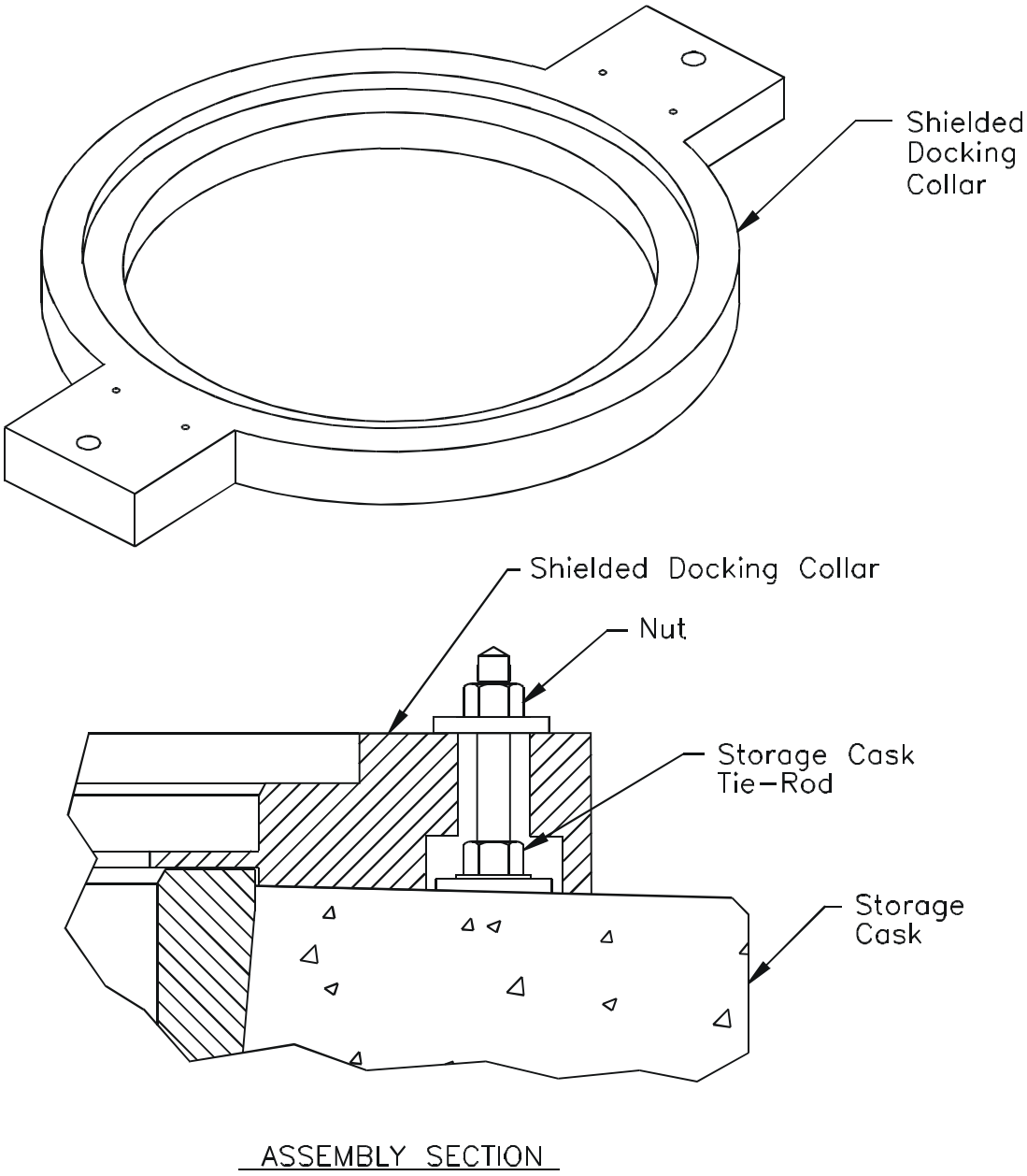

Figure 1.2-3 - Shielded Docking Collar

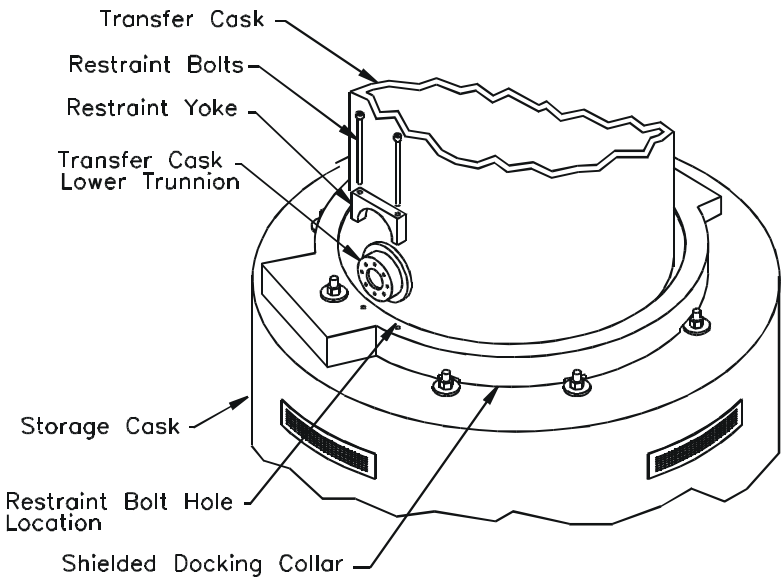

Vertical Transfer

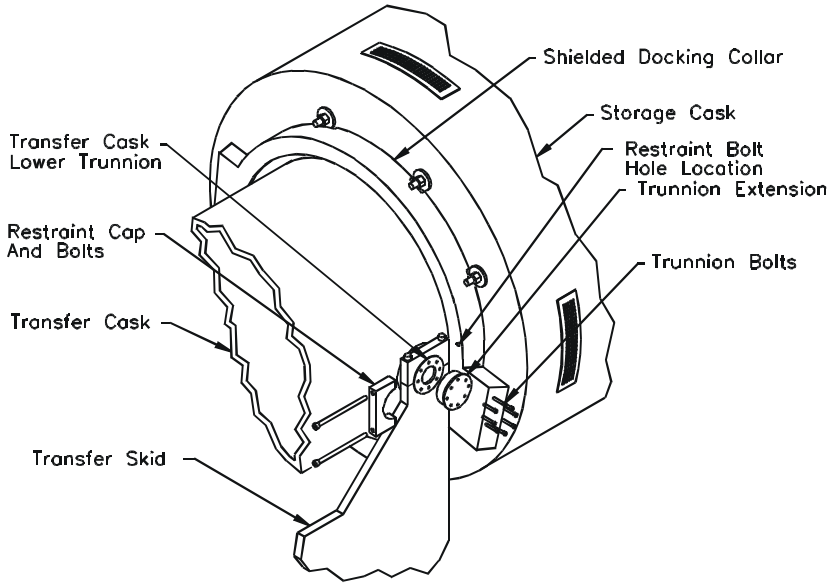

Horizontal Transfer

Figure 1.2-4 - Cask Restraints

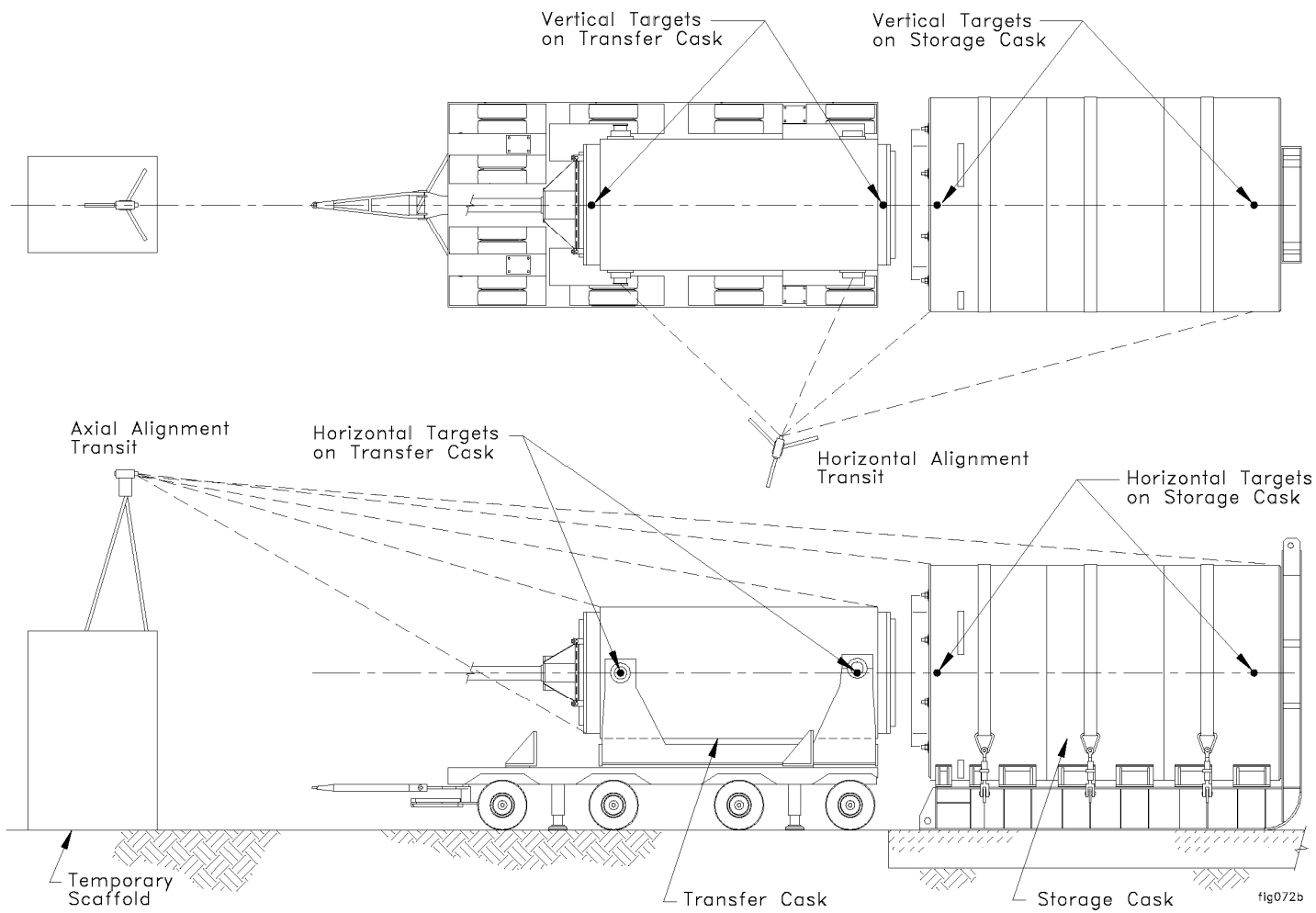

Figure 1.2-5 - Cask/Canister Alignment Verification

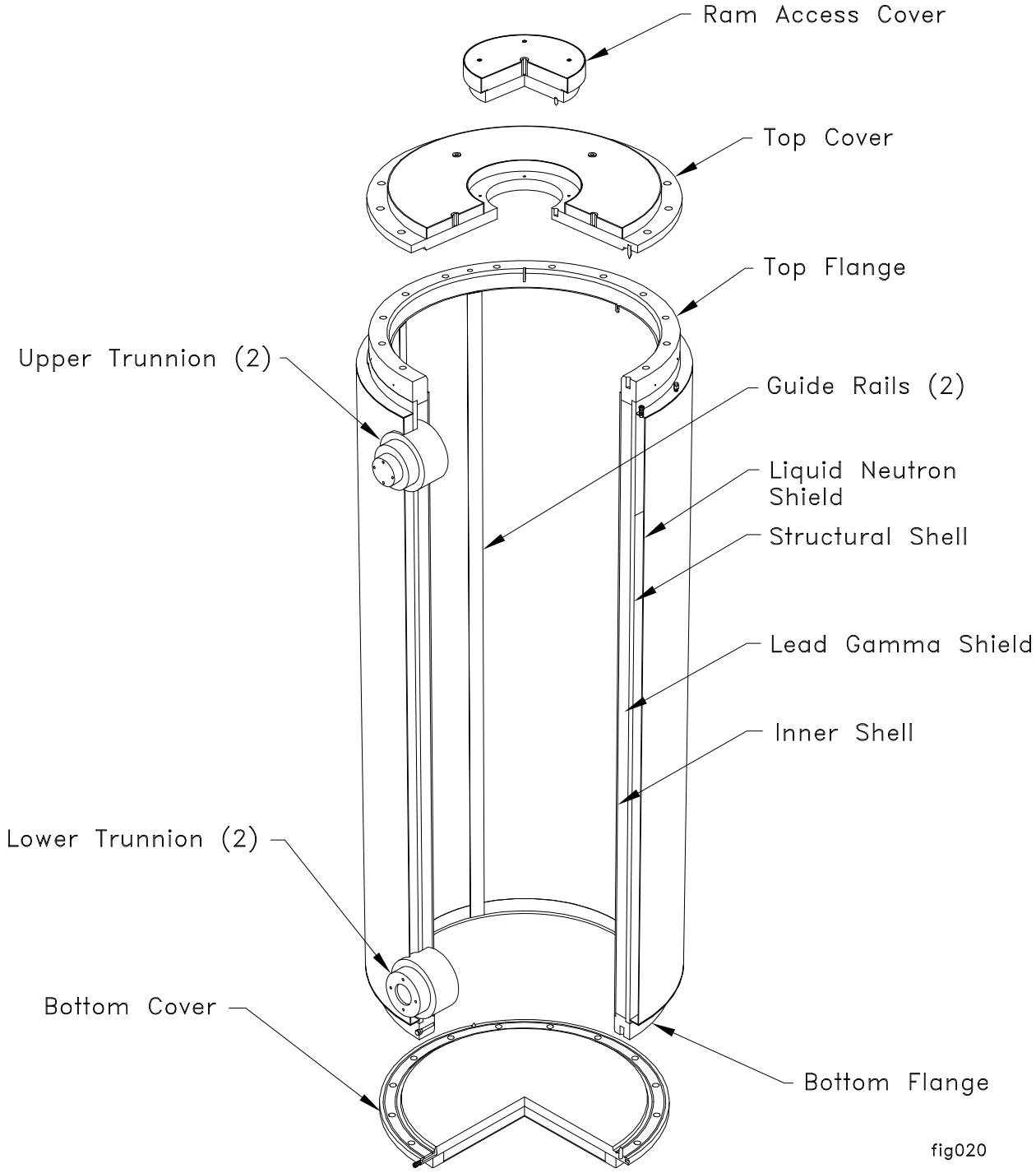

Figure 1.2-6 - FuelSolutions™ W100 Transfer Cask

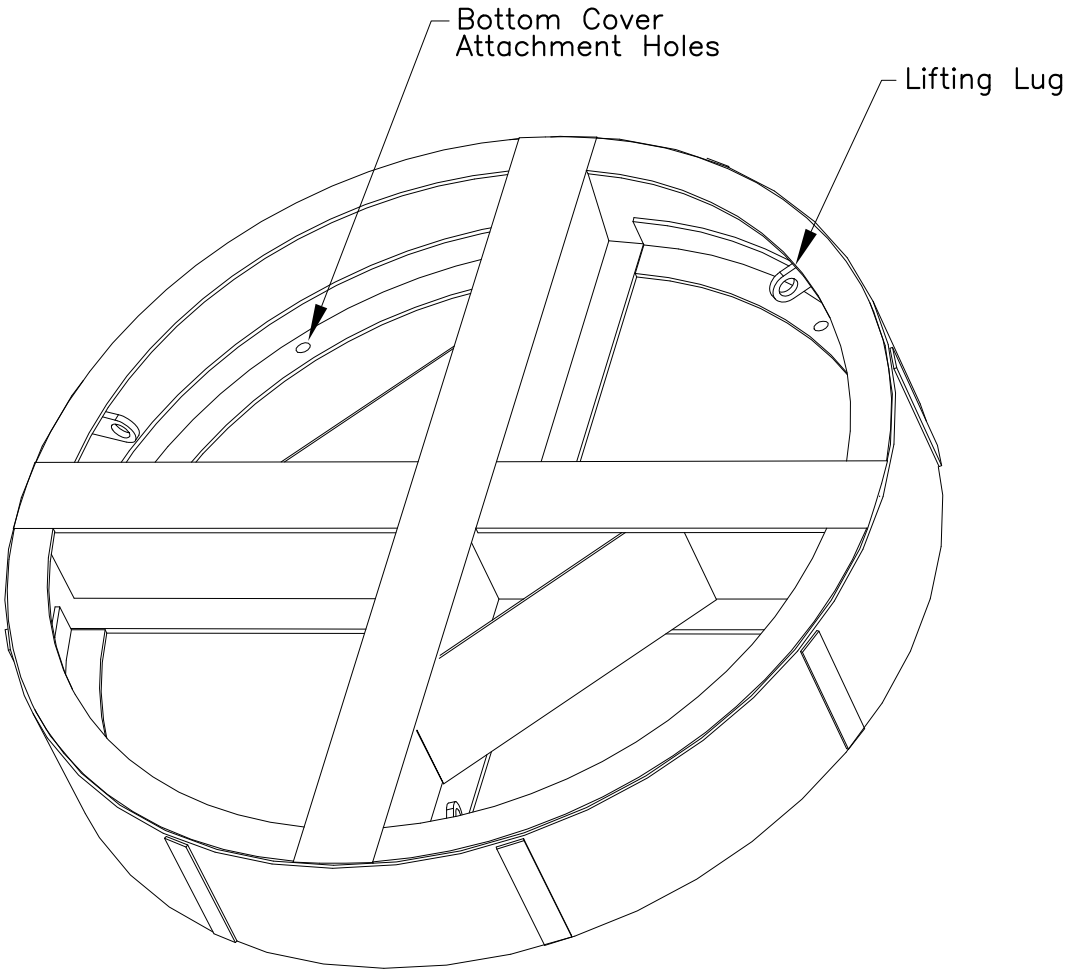

Figure 1.2-7 - Cask Cavity Axial Spacer

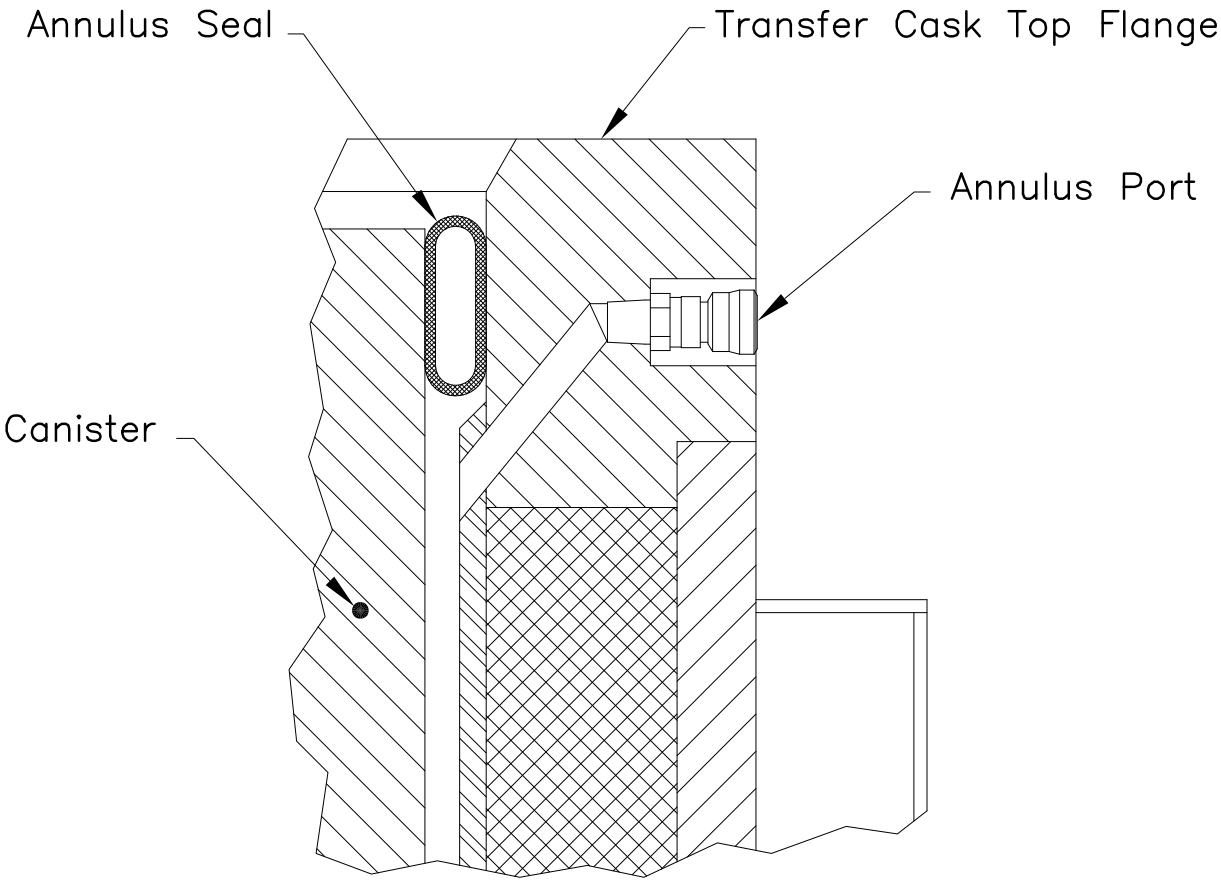

Figure 1.2-8 - Inflatable Annulus Seal

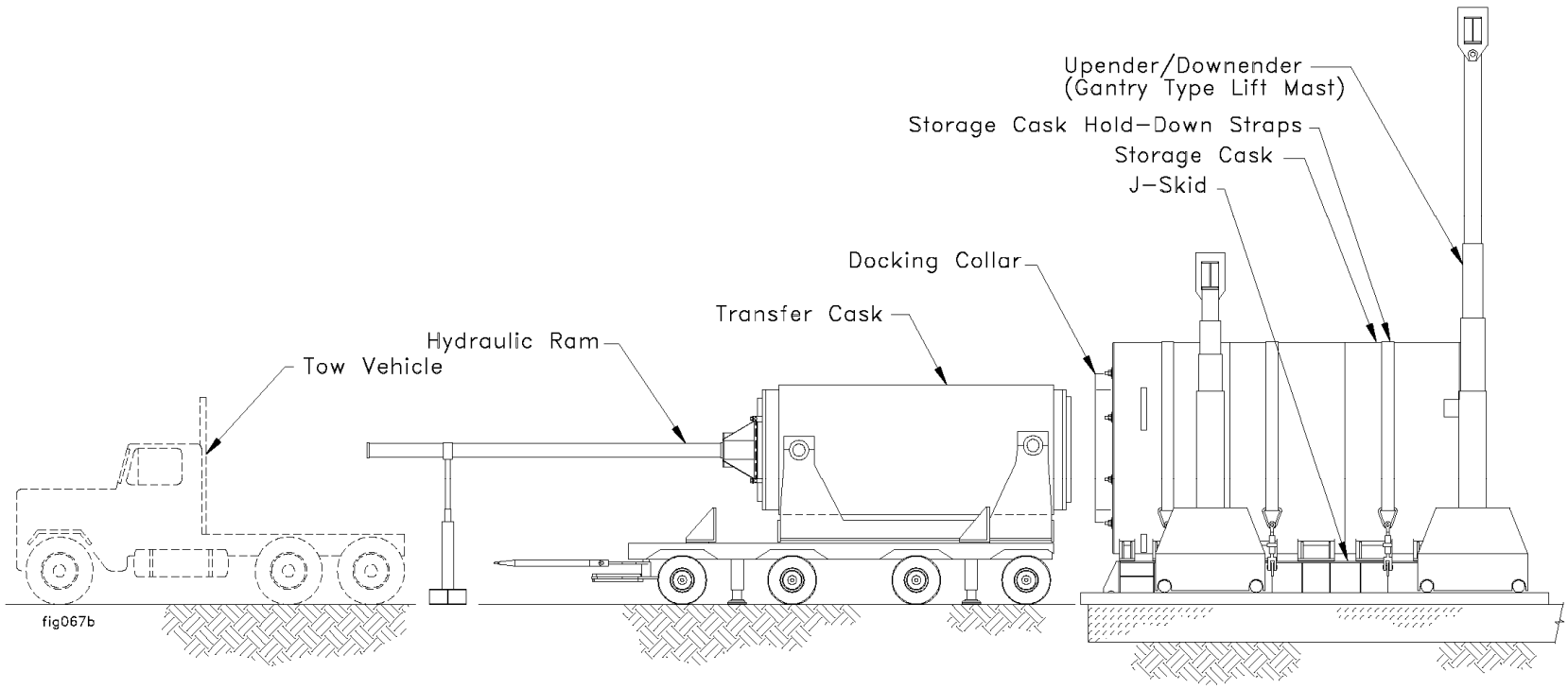

Figure 1.2-9 - Components and Equipment for Horizontal Canister Transfer

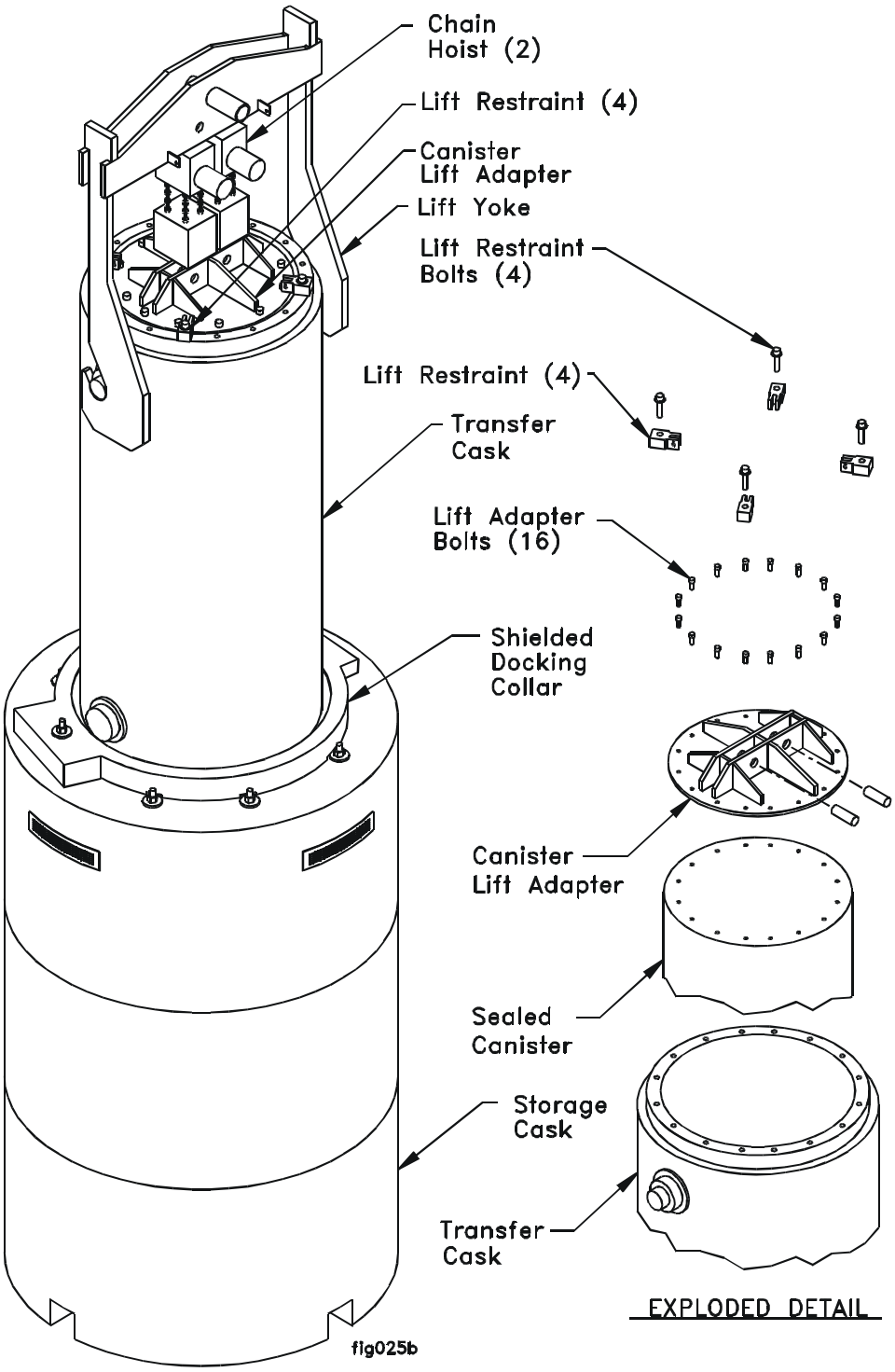

Figure 1.2-10 - Components and Equipment for Vertical Canister Transfer

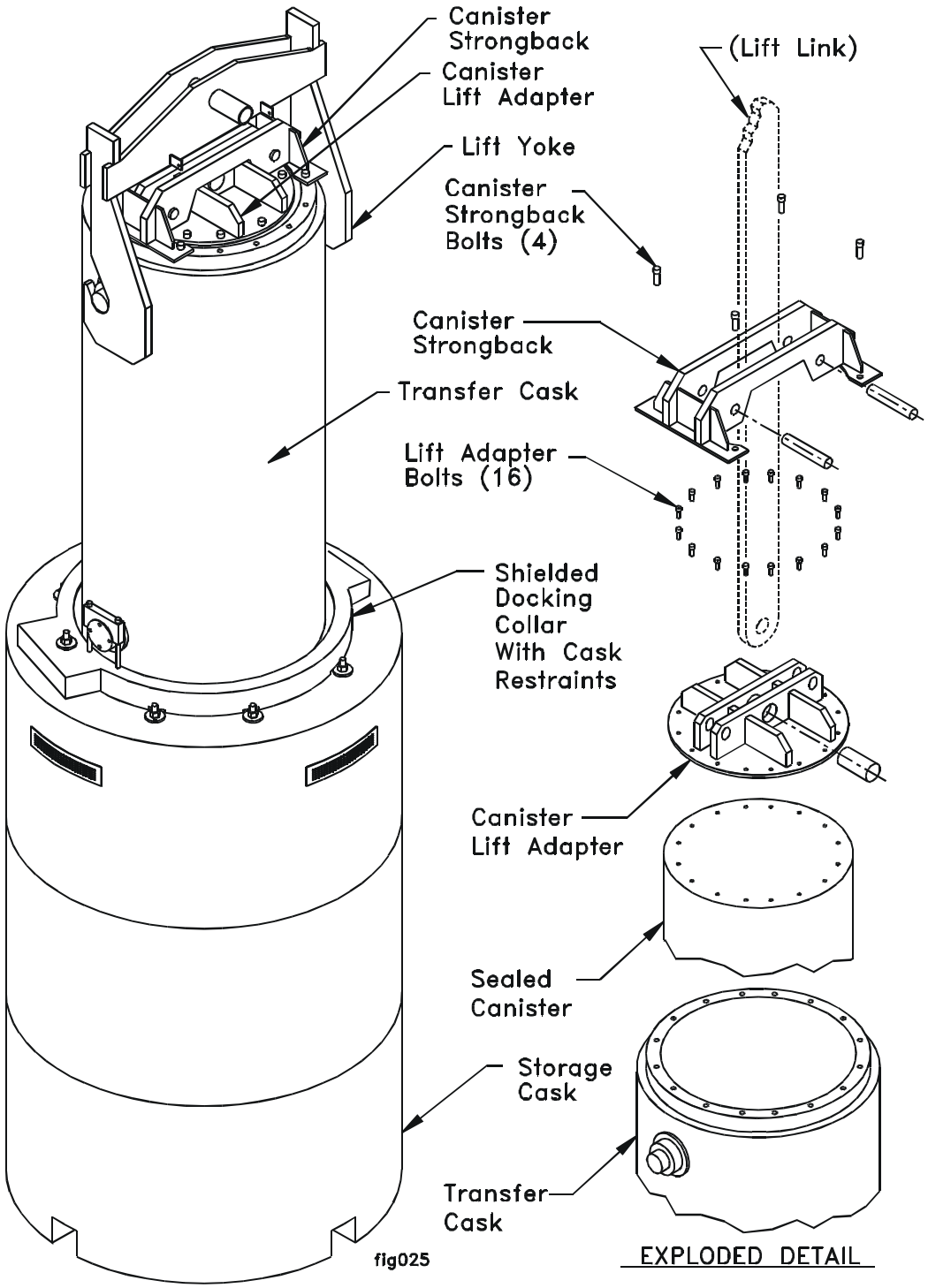

Figure 1.2-11 - Components and Alternative Equipment for Vertical Canister Transfer

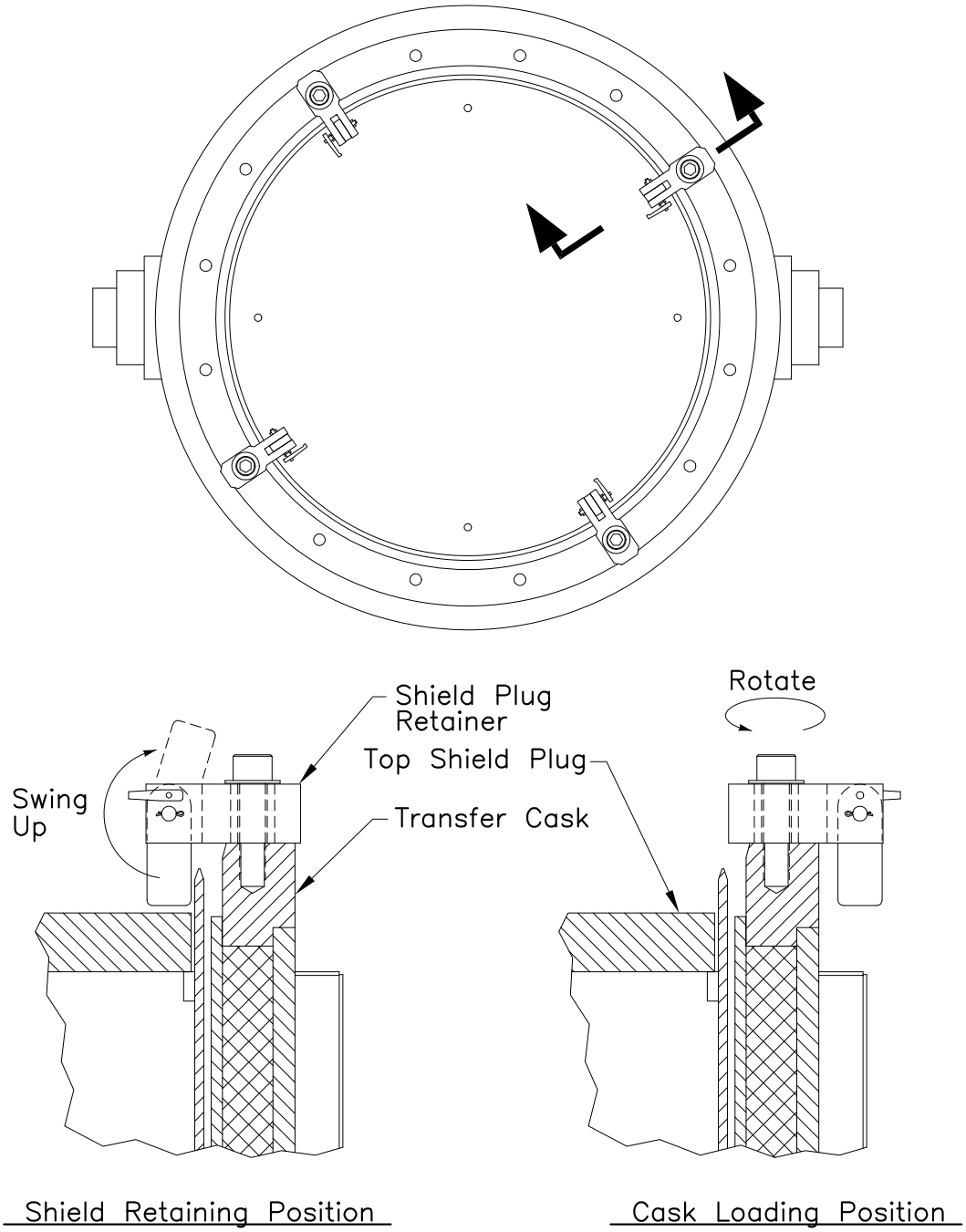

Figure 1.2-12 - Shield Plug Retainers

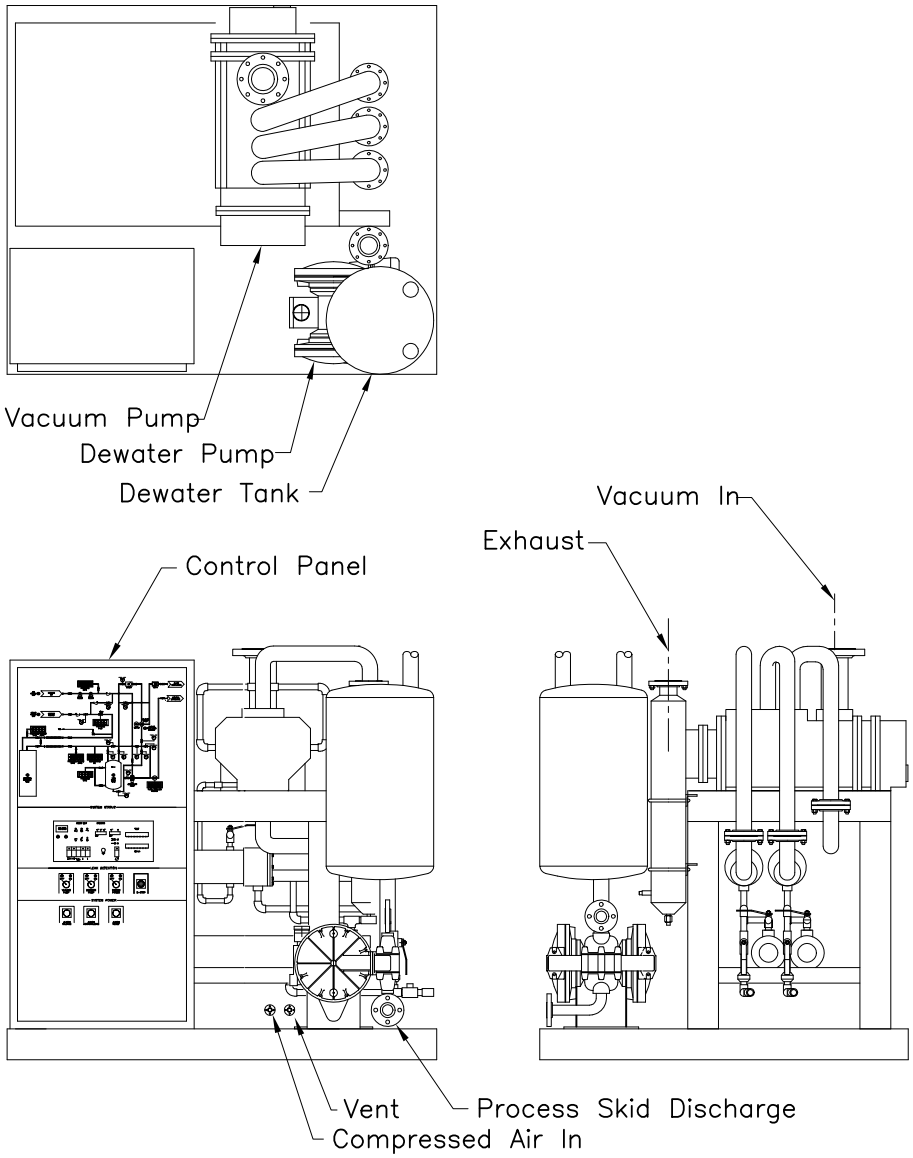

Figure 1.2-13 - Vacuum Drying System

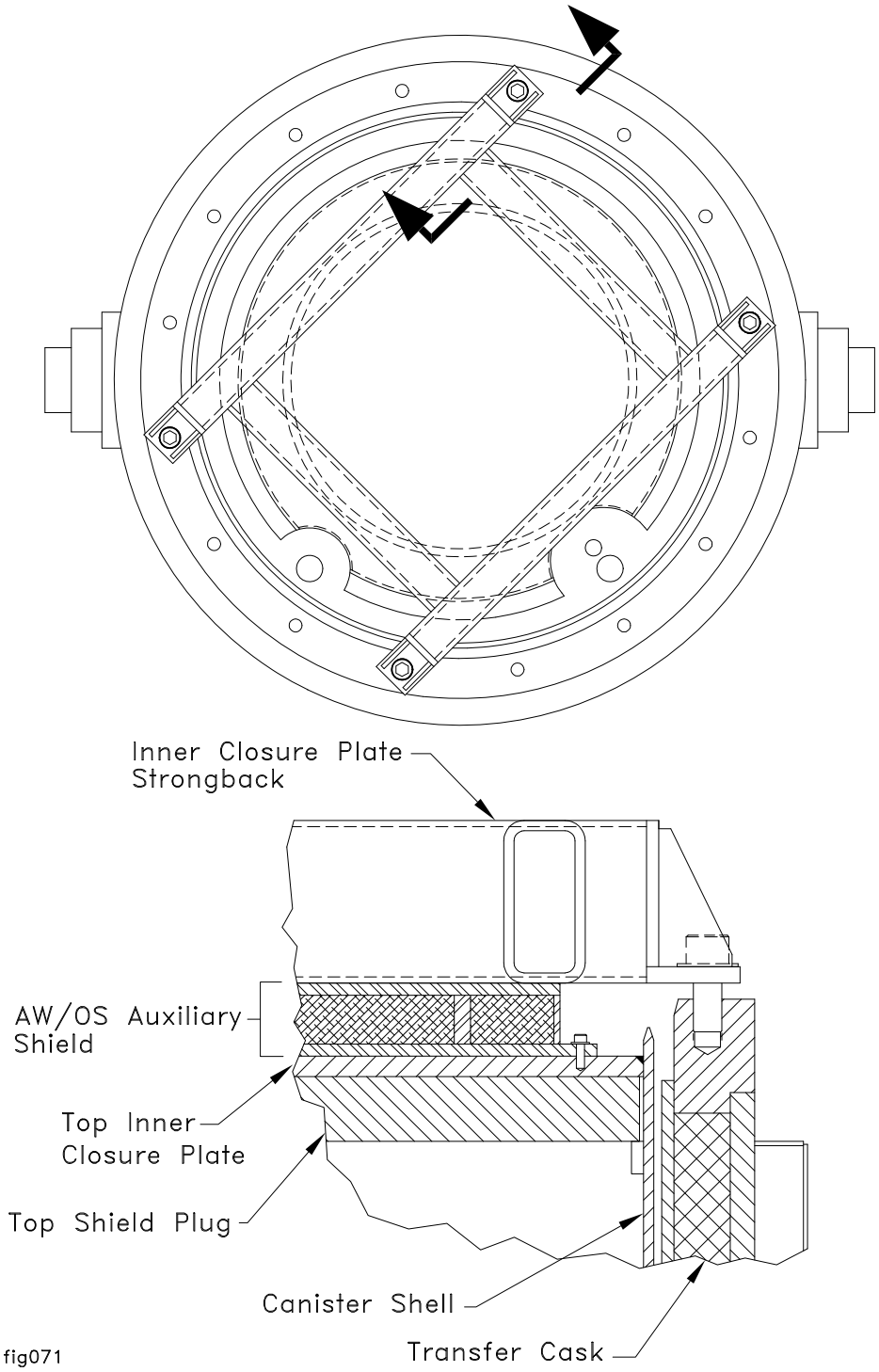

Figure 1.2-14 - Inner Closure Plate Strongback

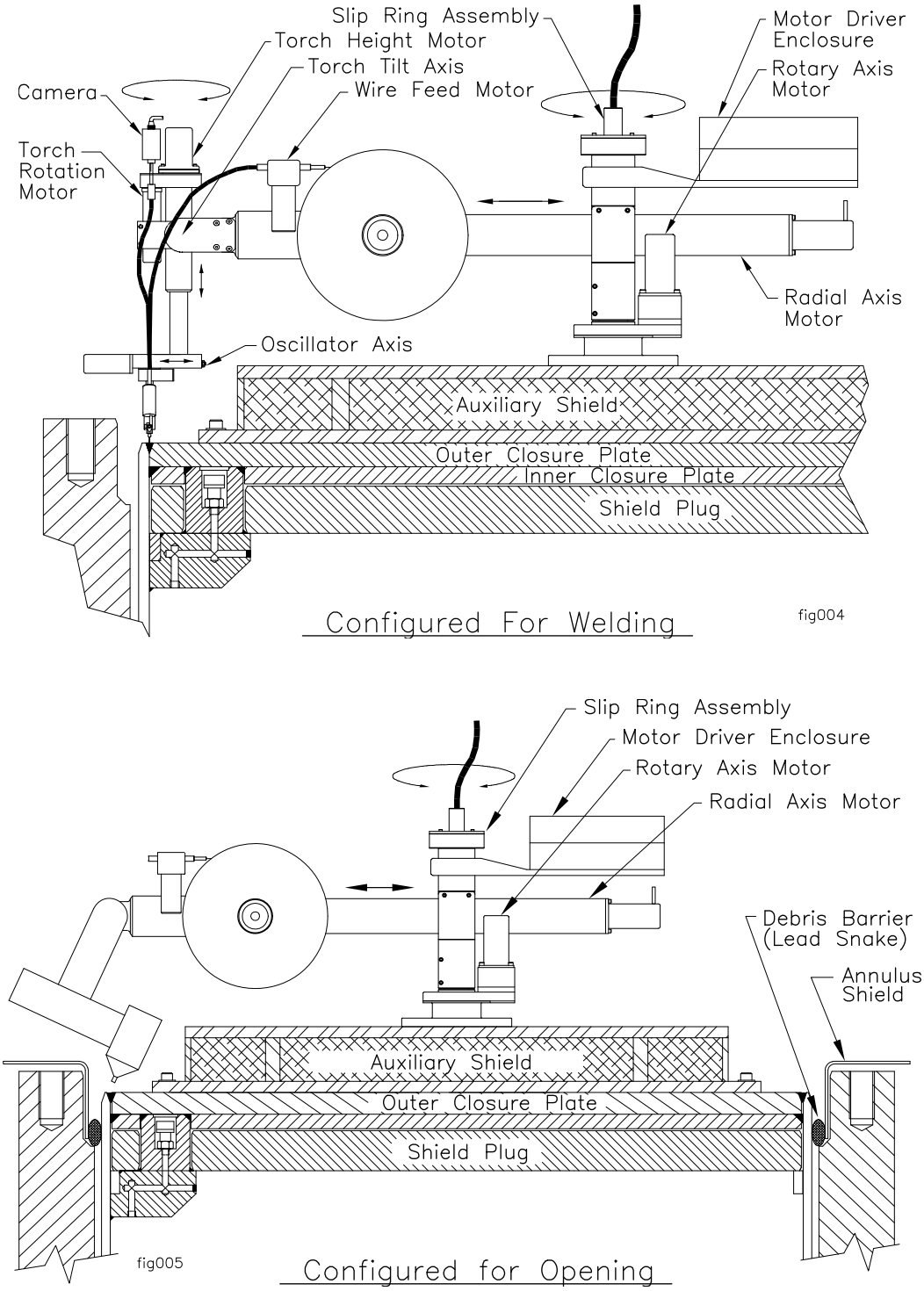

Figure 1.2-15 - Automated Welding and Opening System

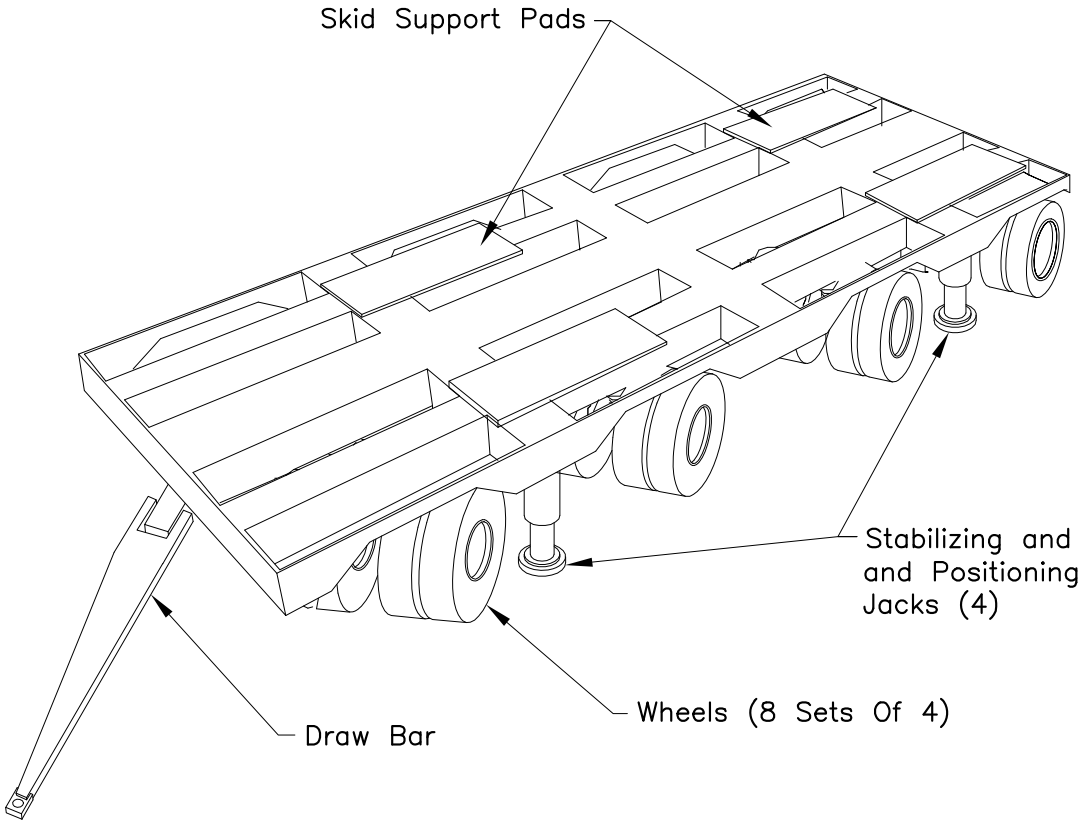

Figure 1.2-16 - Horizontal Transfer Trailer

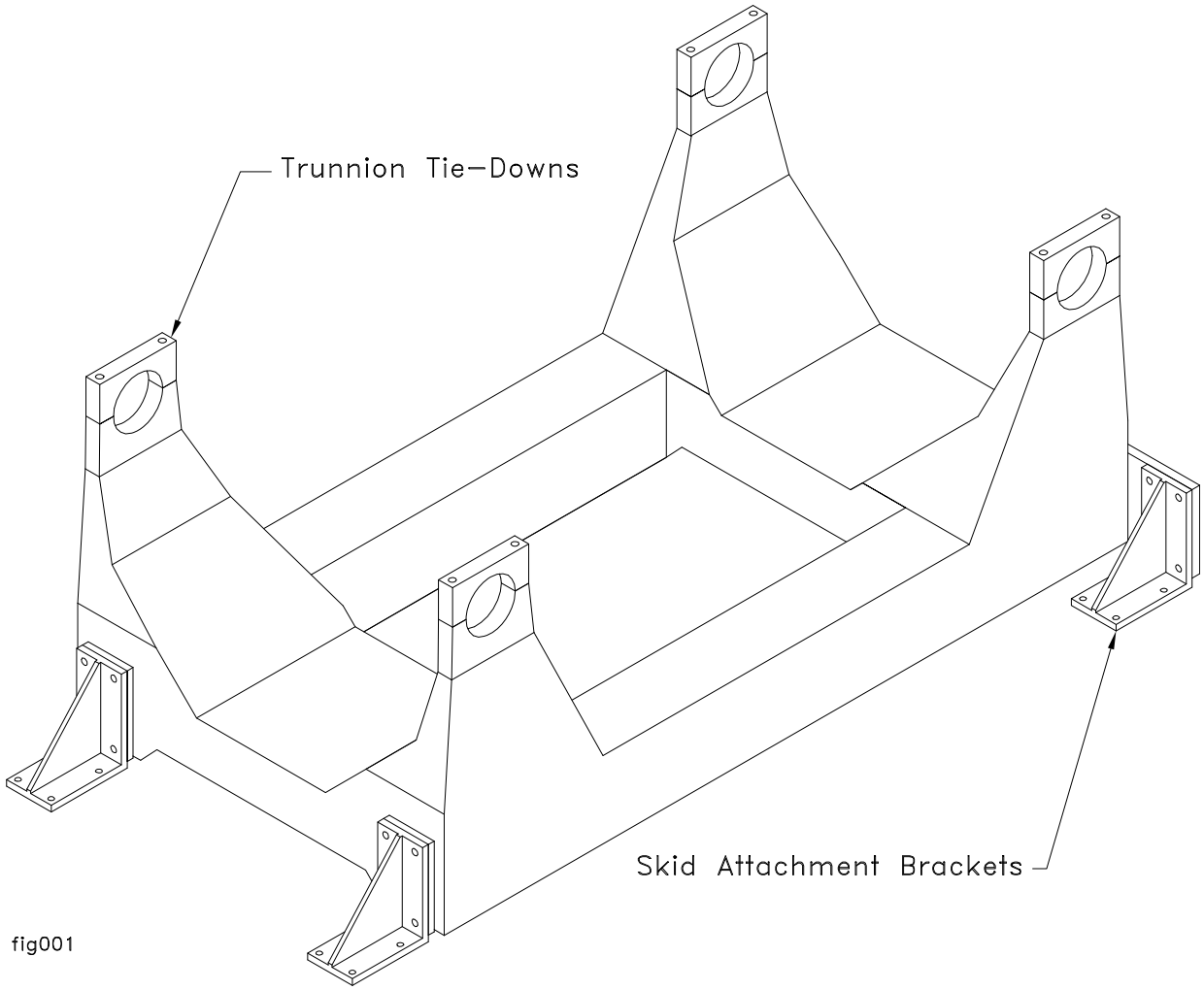

Figure 1.2-17 - Horizontal Transfer Skid

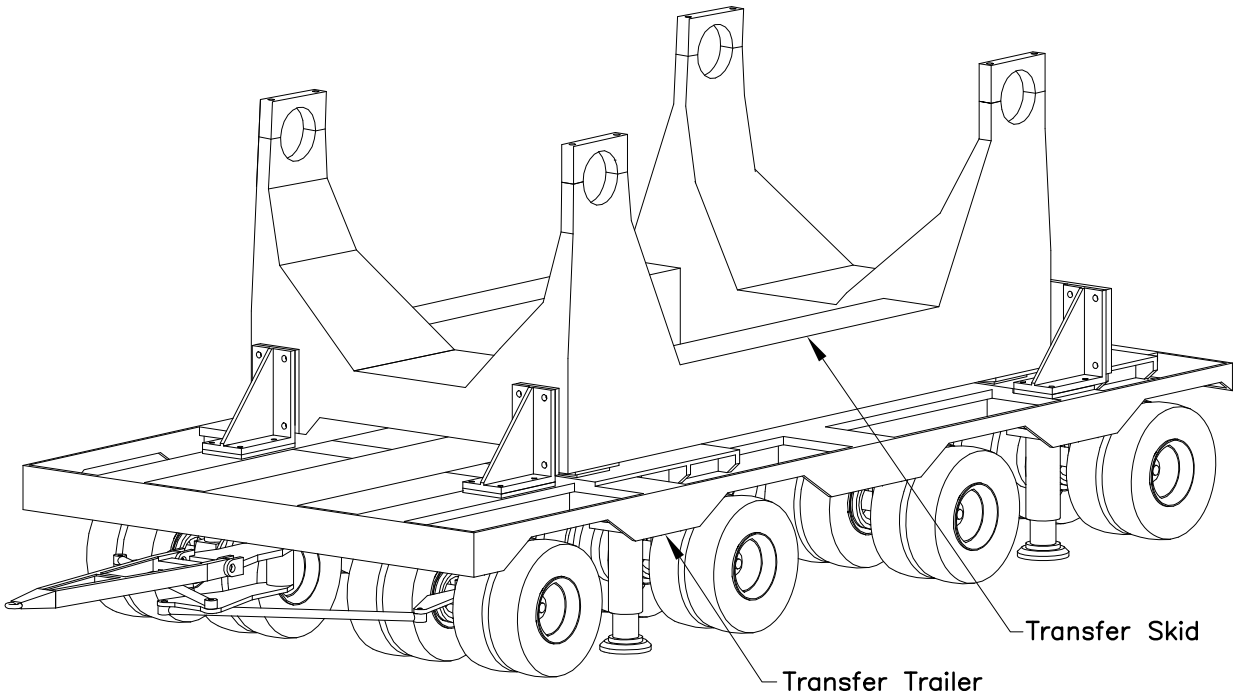

Figure 1.2-18 - Horizontal Transfer Skid with Trailer and Skid Positioning System

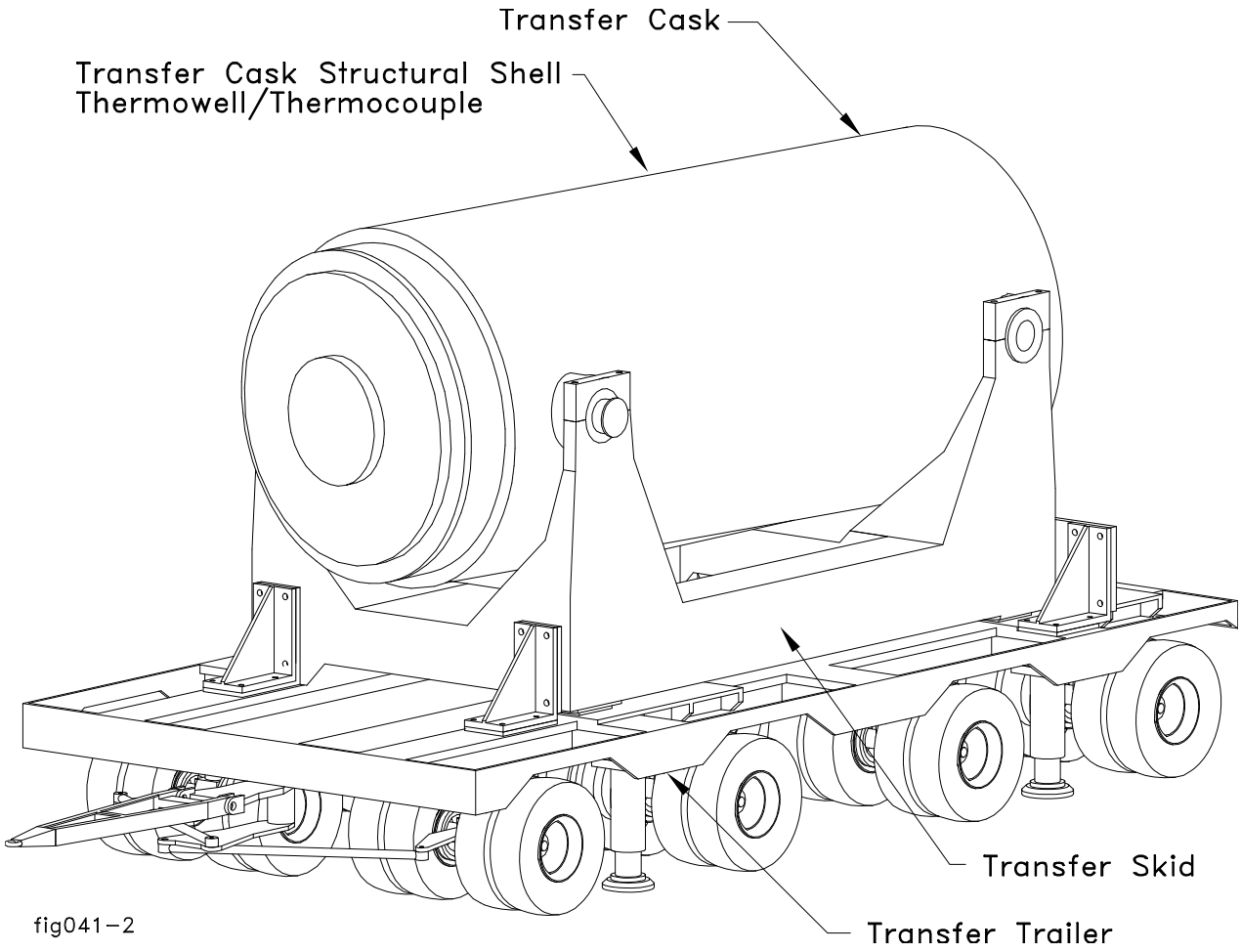

Figure 1.2-19 - Transfer Cask on Horizontal Transfer Skid and Trailer

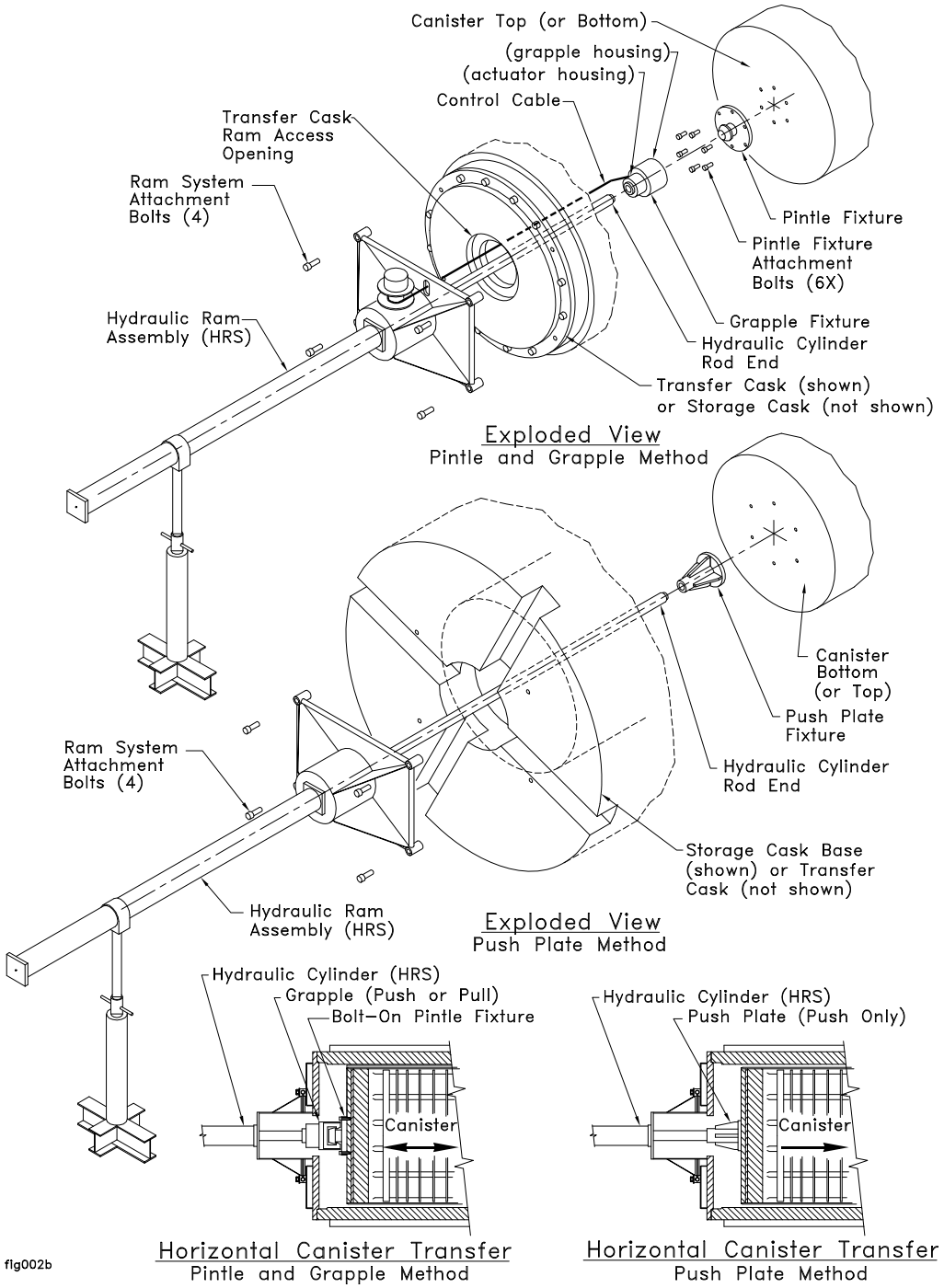

Figure 1.2-20 - Hydraulic Ram System (2 pages)

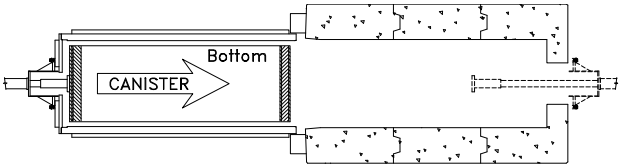

TRANSFER CASE 1

- Mount Hydraulic Ram With Push Plate on Top of Transfer Cask.
- Extend Hydraulic Ram to Push Canister.
- Hydraulic Ram May be Moved to Bottom of Storage Cask to Push Canister Back During Off–Normal Event.

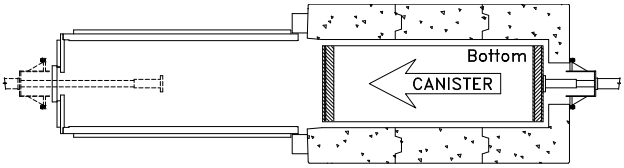

TRANSFER CASE 2

- Mount Hydraulic Ram With Push Plate on Bottom of Storage Cask.
- Extend Hydraulic Ram to Push Canister.
- Hydraulic Ram May be Moved to Top of Transfer Cask to Push Canister Back During Off–Normal Event.

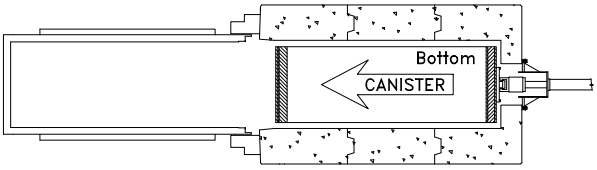

TRANSFER CASE 3

- Bolt Bottom Pintle onto Canister Through the Storage Cask Bottom.
- Mount Hydraulic Ram with Grapple on Bottom of Storage Cask.
- Engage Pintle with Grapple and Extend Hydraulic Ram.
- Canister May be Pulled Back During Off–Normal Event.

Note: Transportation Cask Must Remain Horizontal

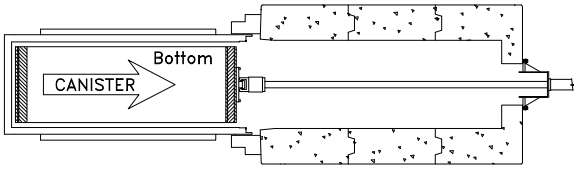

TRANSFER CASE 4

- Bolt Bottom Pintle onto Canister Prior to Aligning Casks.
- Mount Hydraulic Ram with Grapple on Bottom of Storage Cask.
- Engage Pintle with Grapple and Retract Hydraulic Ram.
- Canister May be Pushed Back During Off–Normal Event.

Note: Transportation Cask Must Remain Horizontal

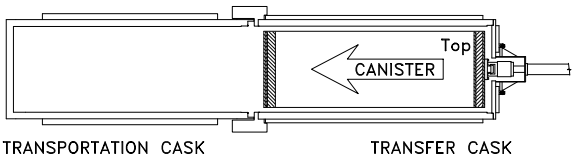

TRANSFER CASE 5

- Bolt Top Pintle onto Canister Through the Transfer Cask Top.
- Mount Hydraulic Ram with Grapple on Top of Transfer Cask.
- Engage Pintle with Grapple and Extend Hydraulic Ram.
- Canister May be Pulled Back During Off–Normal Event.

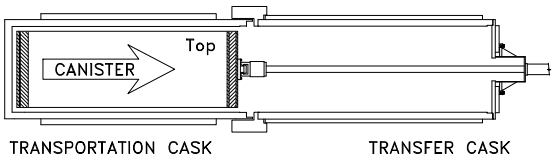

TRANSFER CASE 6

- Bolt Top Pintle onto Canister Prior to Aligning Casks.
- Mount Hydraulic Ram with Grapple on Top of Transfer Cask.
- Engage Pintle with Grapple and Retract Hydraulic Ram.
- Canister May be Pushed Back During Off–Normal Event.

fig144

Figure 1.2-20 - Hydraulic Ram System (2 pages)

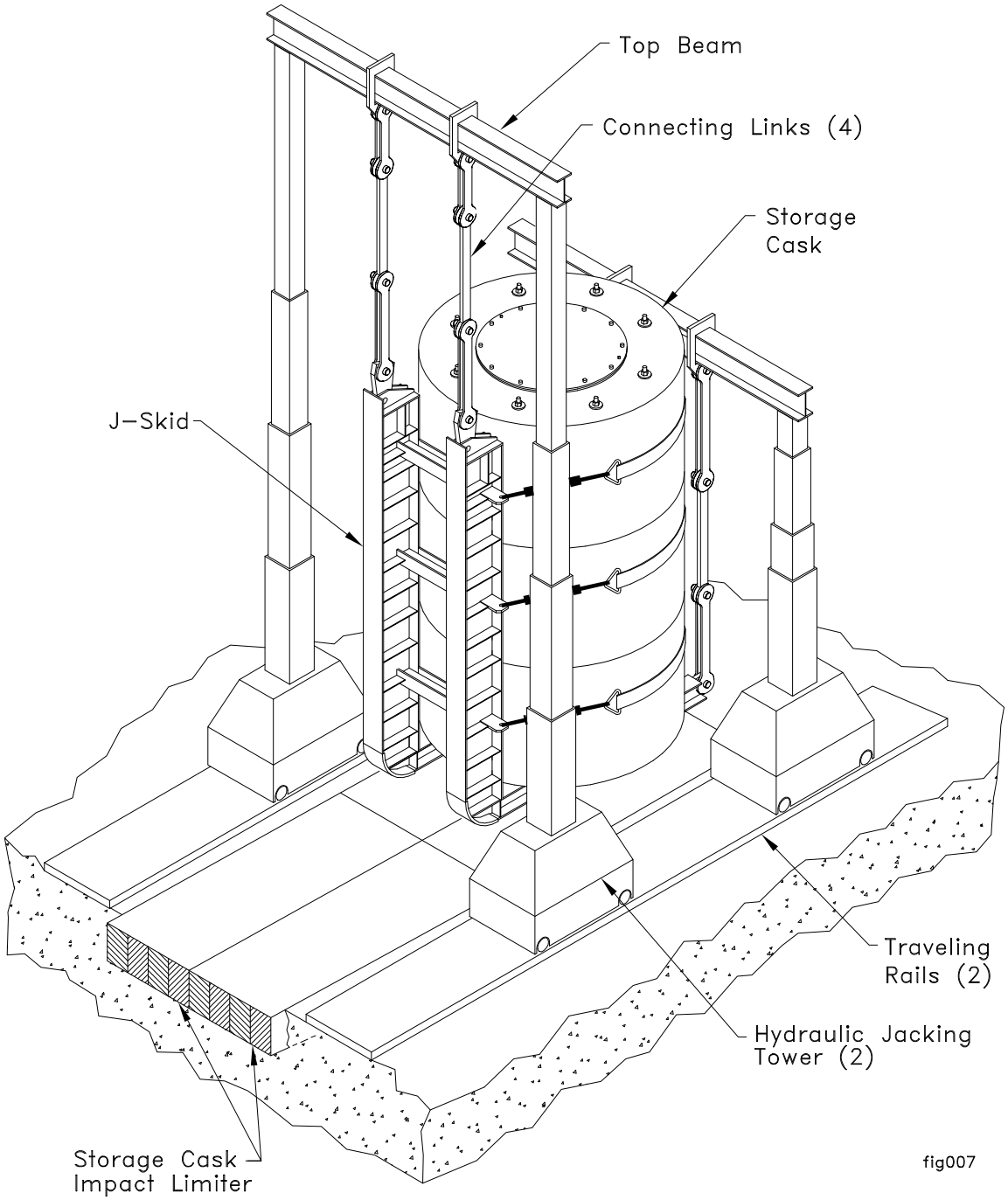

Figure 1.2-21 - Upender/Downender - Four-Point Gantry Type

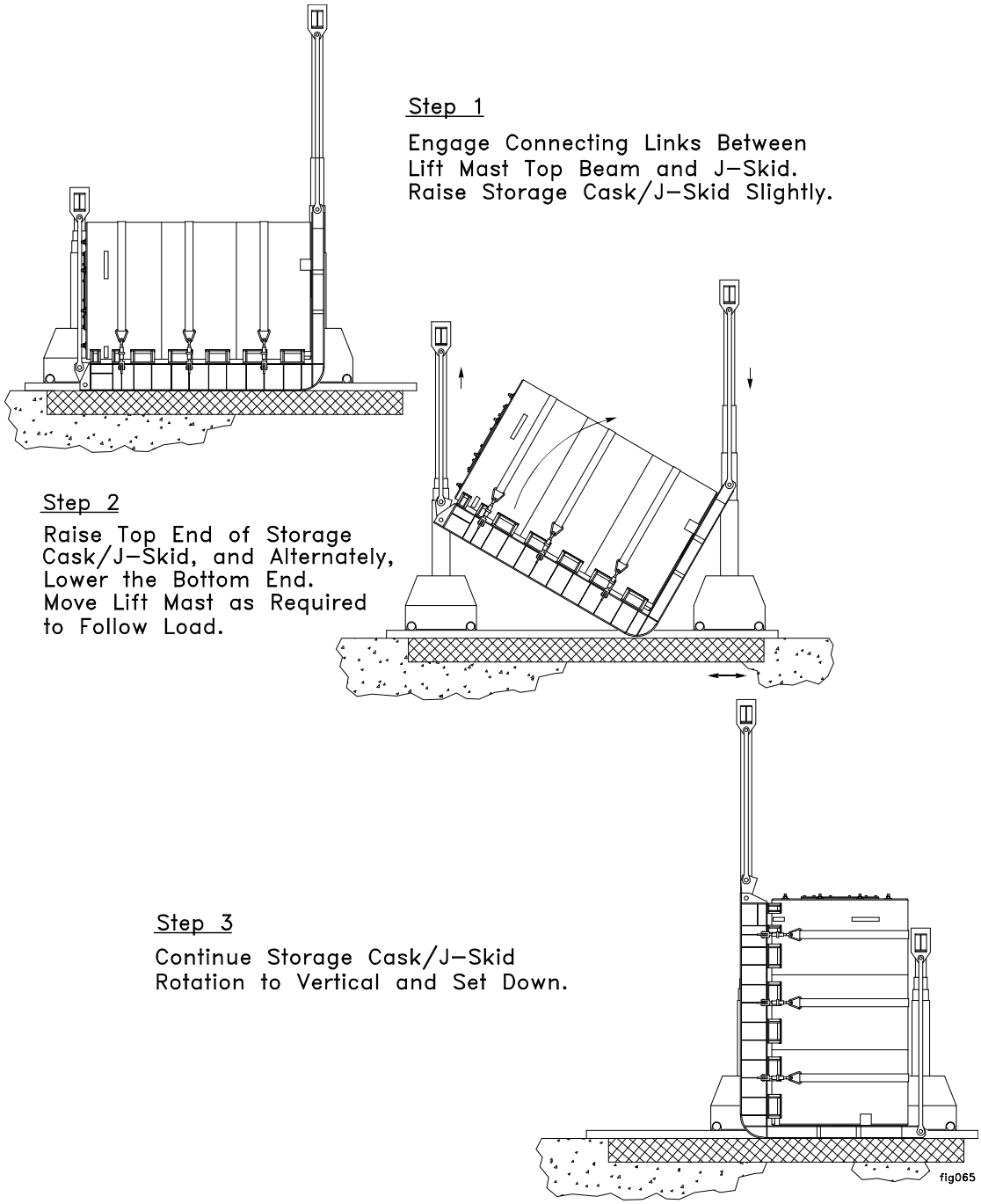

Figure 1.2-22 - Upender/Downender - Four-Point Gantry Rotation Sequence

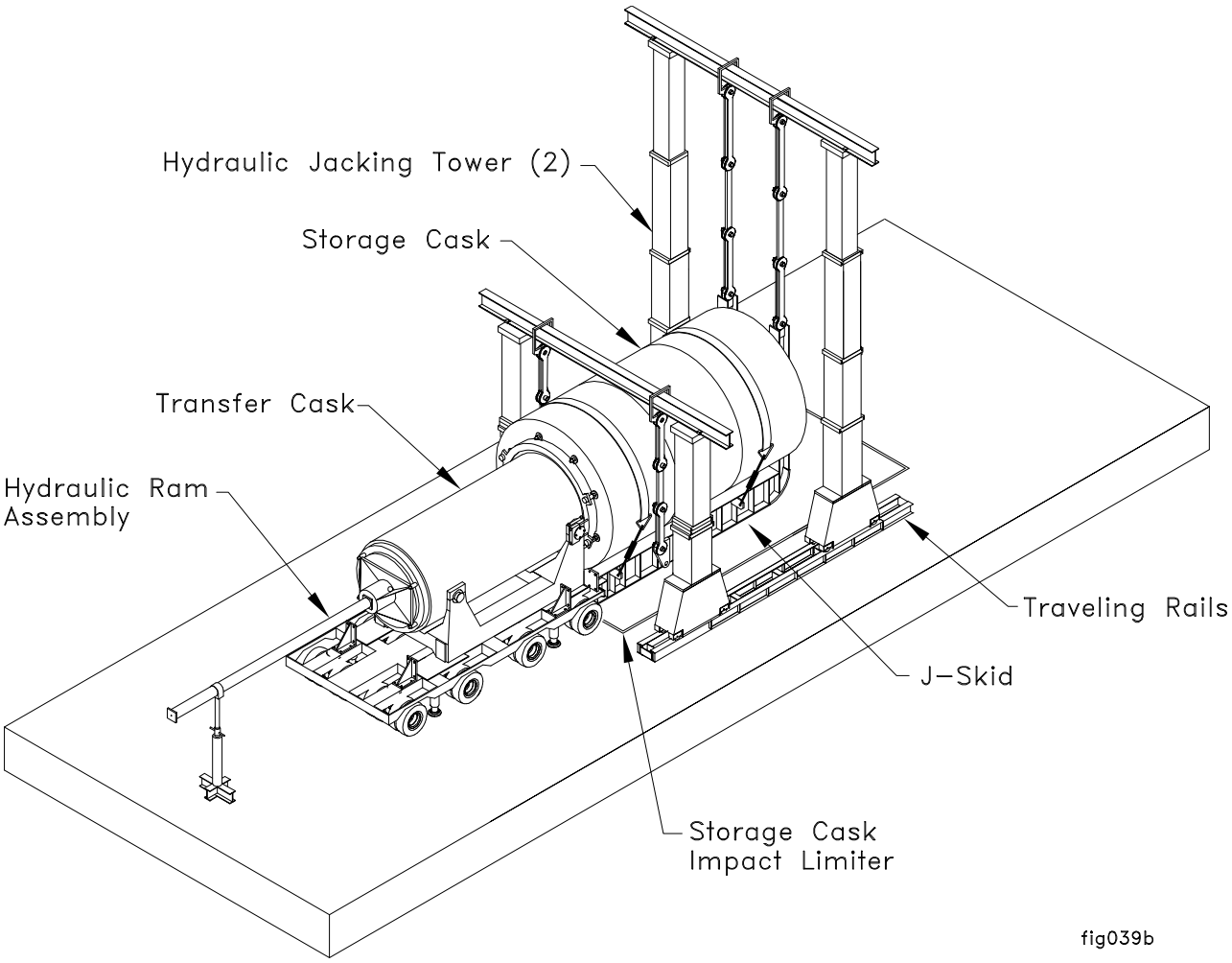

Figure 1.2-23 - Horizontal Canister Transfer from Transfer Cask to Storage Cask

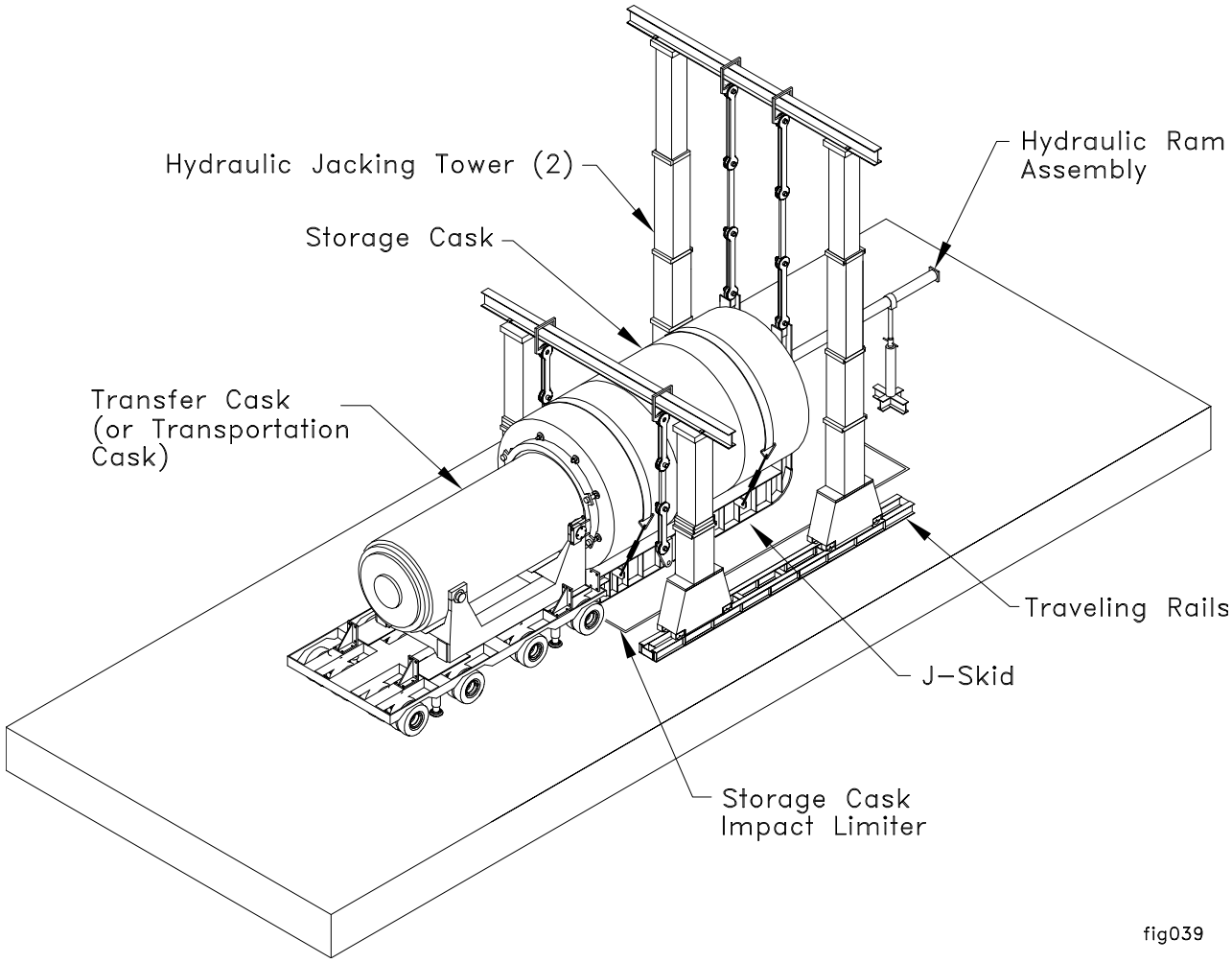

Figure 1.2-24 - Horizontal Canister Transfer from Storage Cask to Transfer Cask

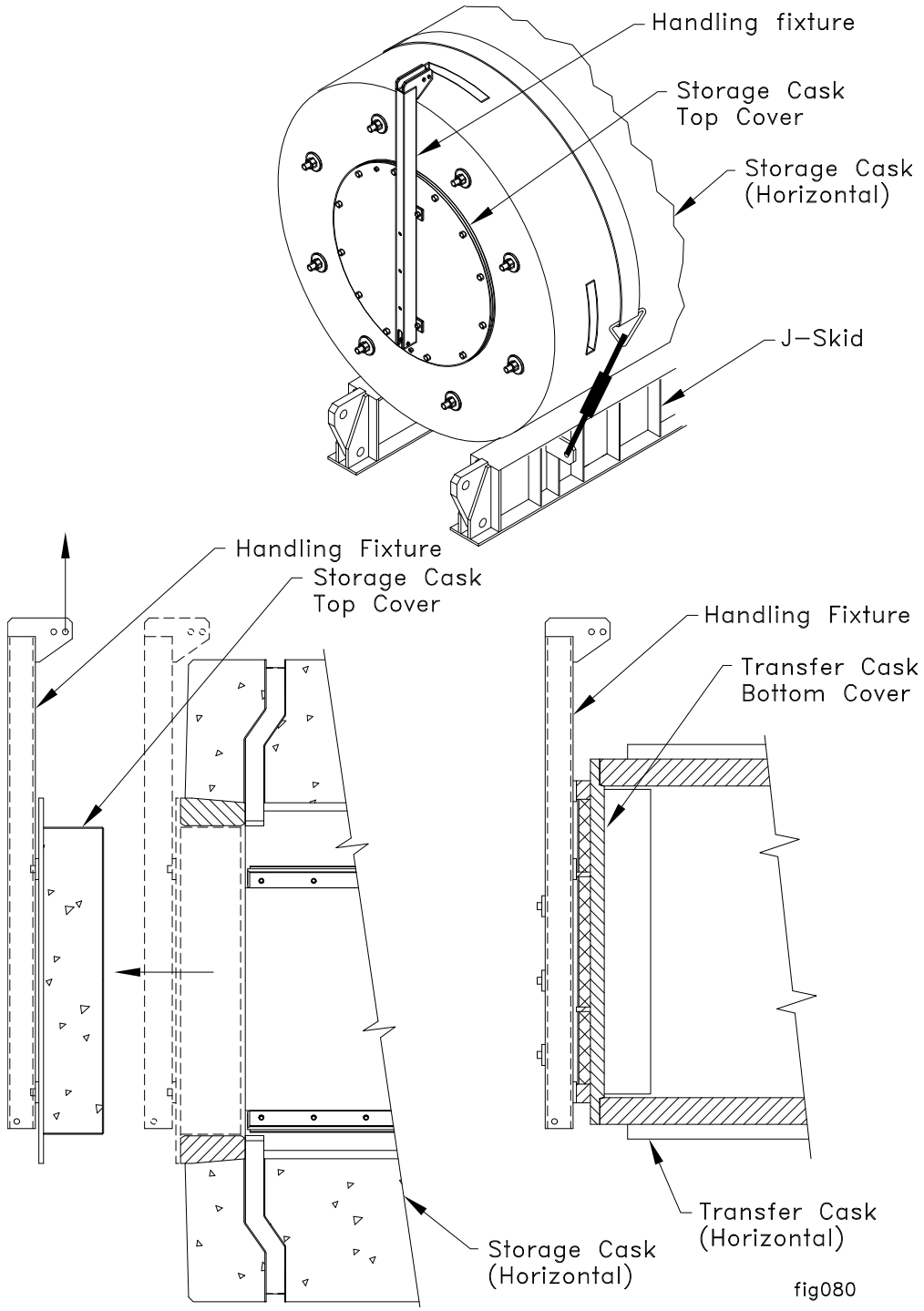

Figure 1.2-25 - Horizontal Lid Handling Fixture

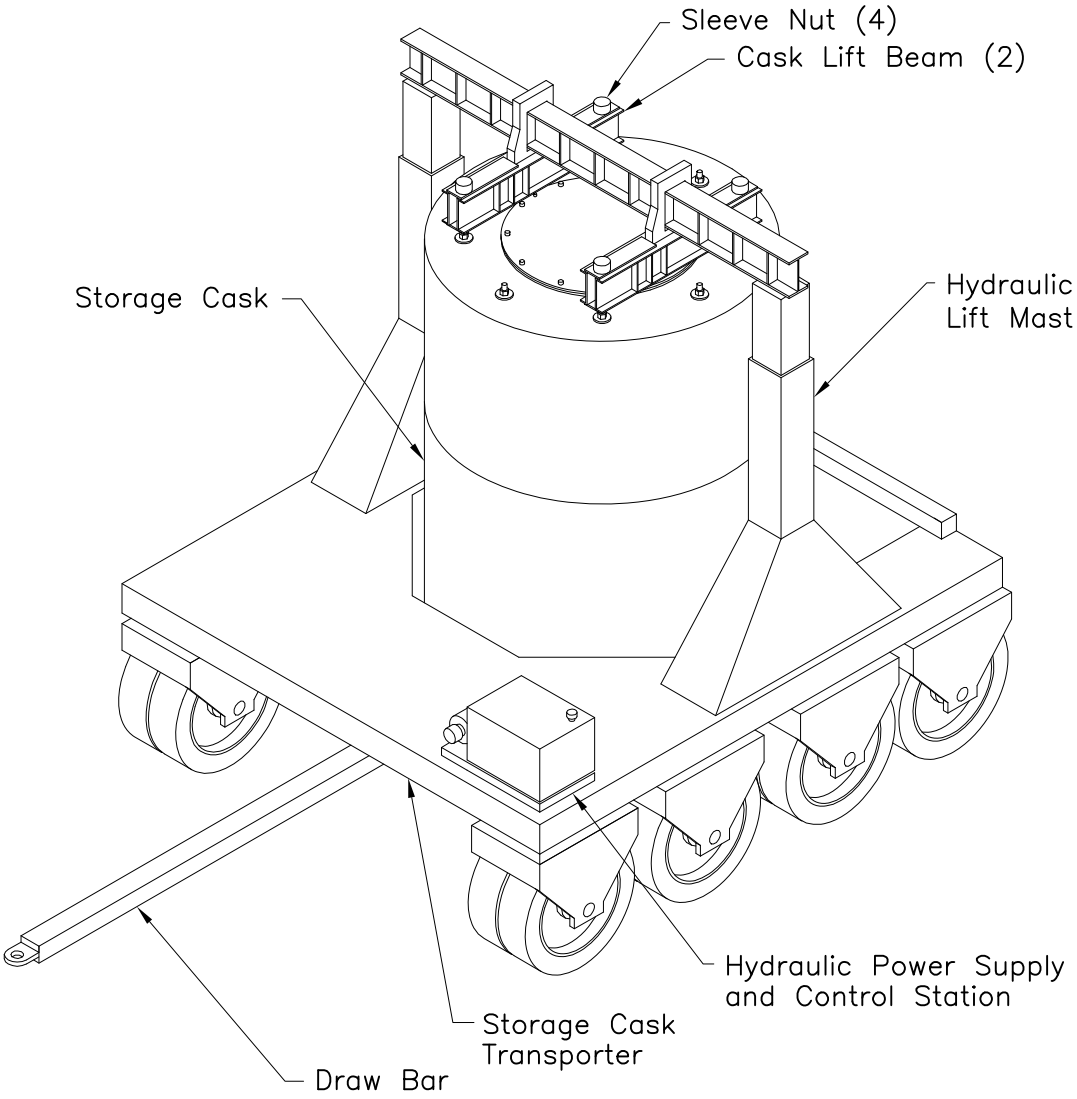

Figure 1.2-26 - Storage Cask Vertical Transporter

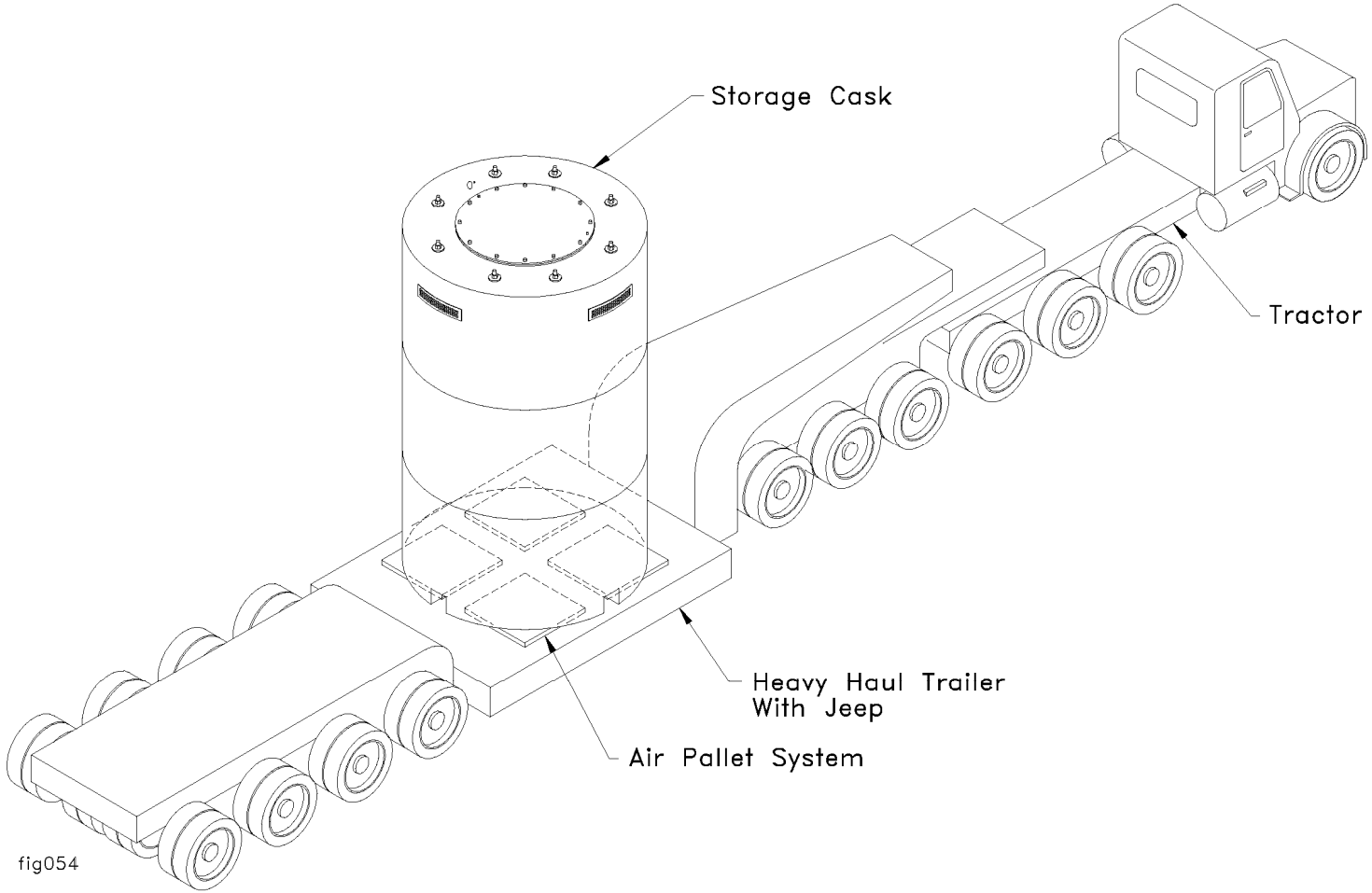

Figure 1.2-27 - Storage Cask Vertical Transport Trailer

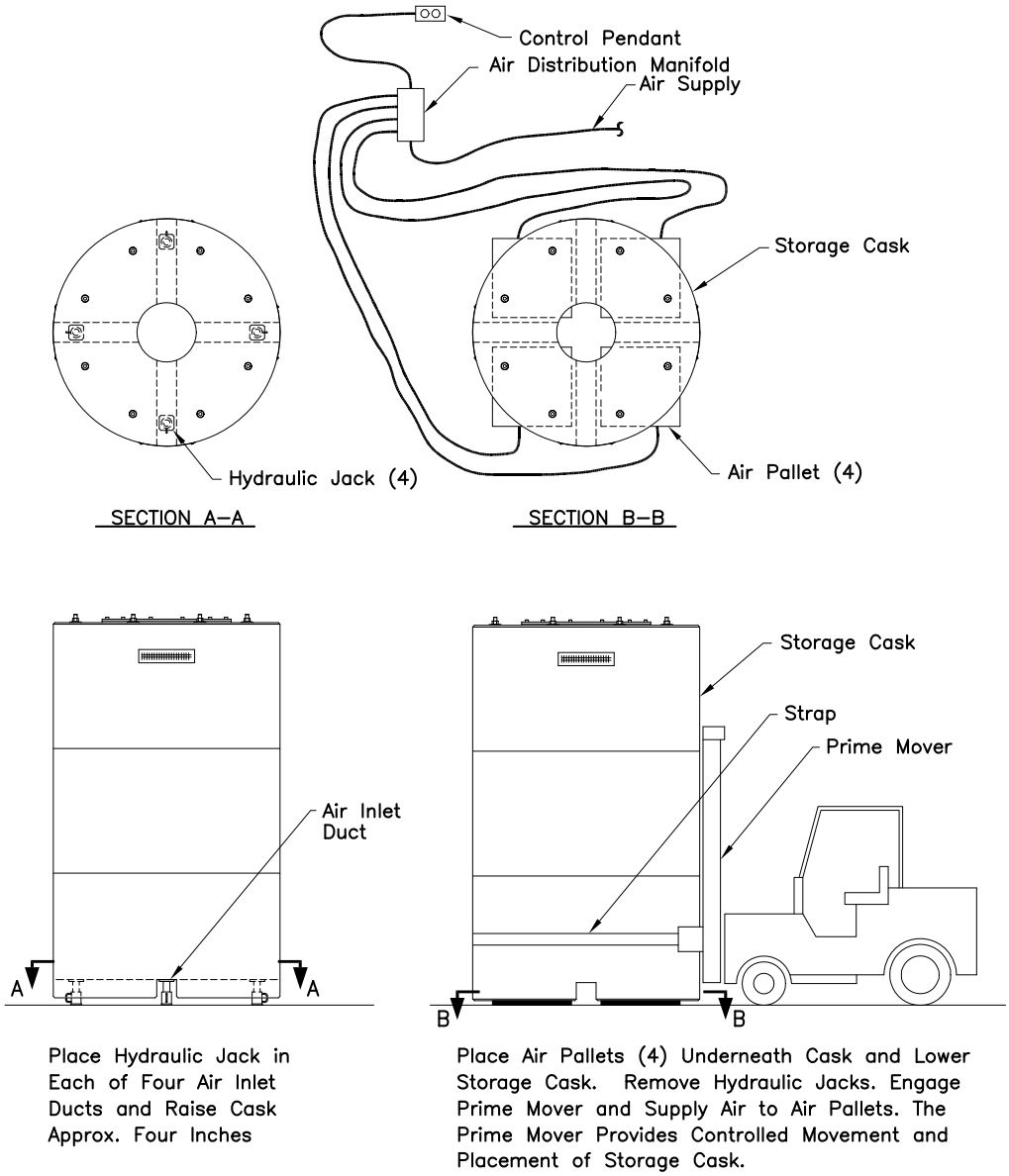

Figure 1.2-28 - Storage Cask Movement with Air Pallets

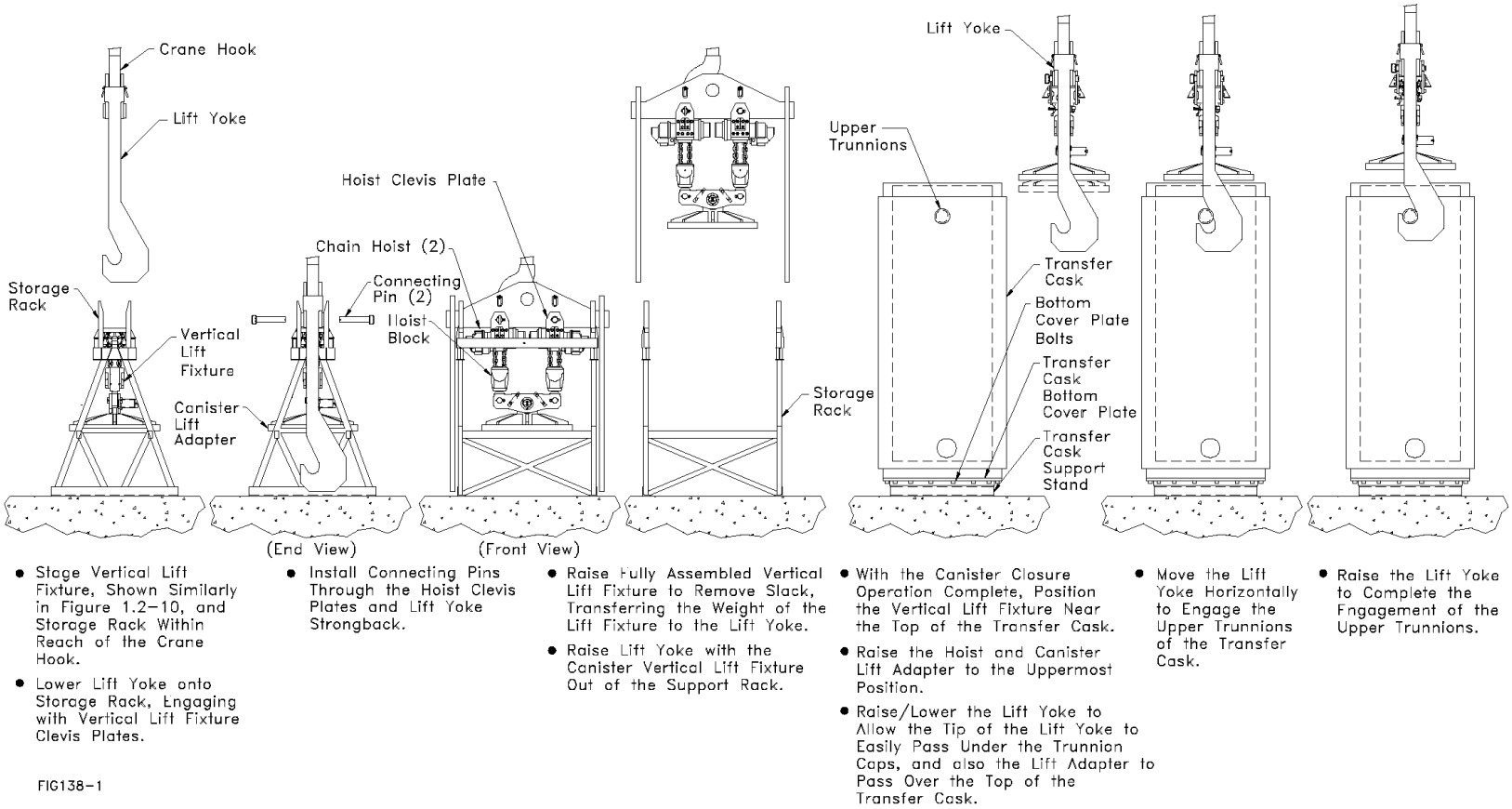

Figure 1.2-29 - Canister Vertical Lift Fixture Operations (3 pages)

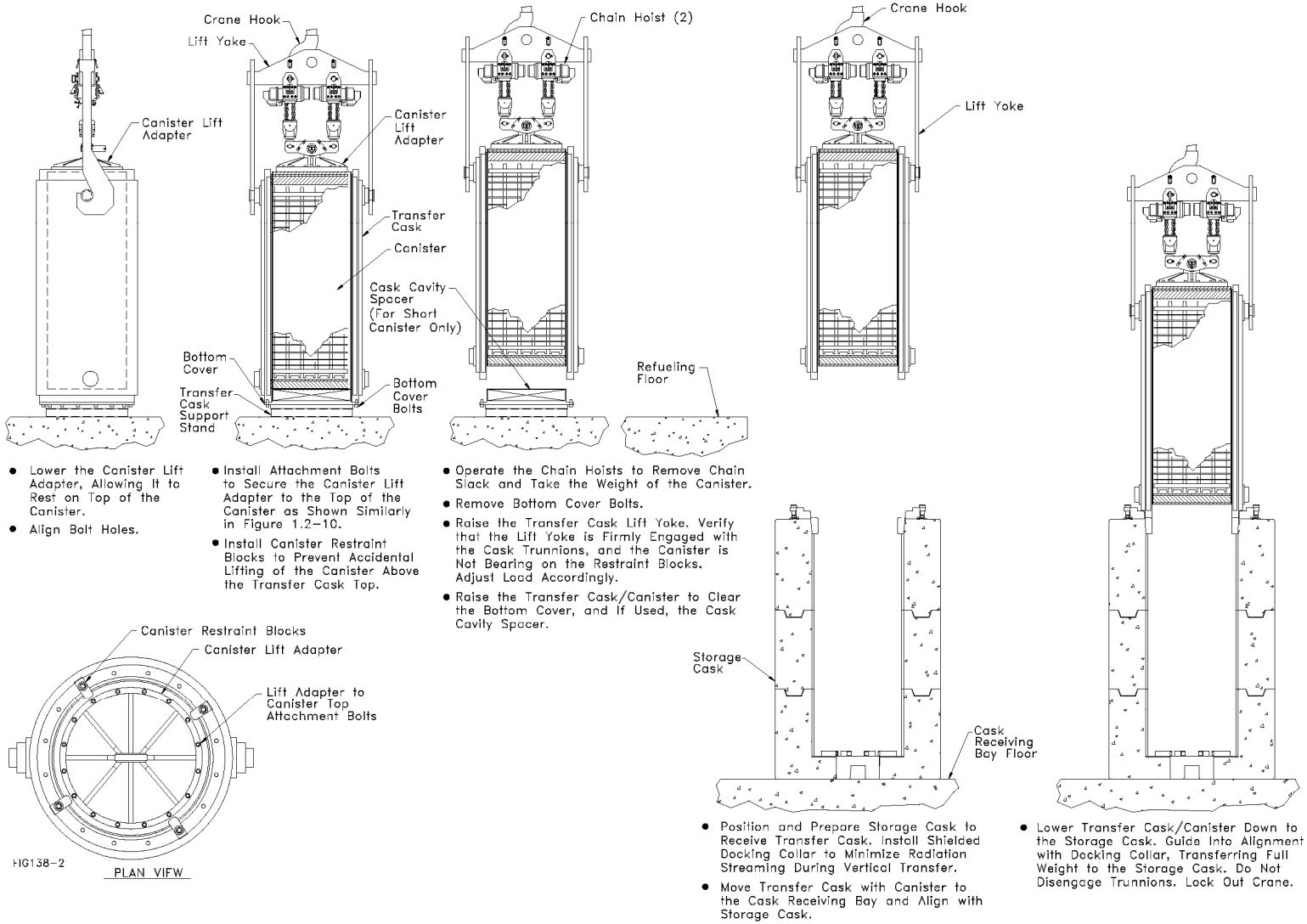

Figure 1.2-29 - Canister Vertical Lift Fixture Operations (3 pages)

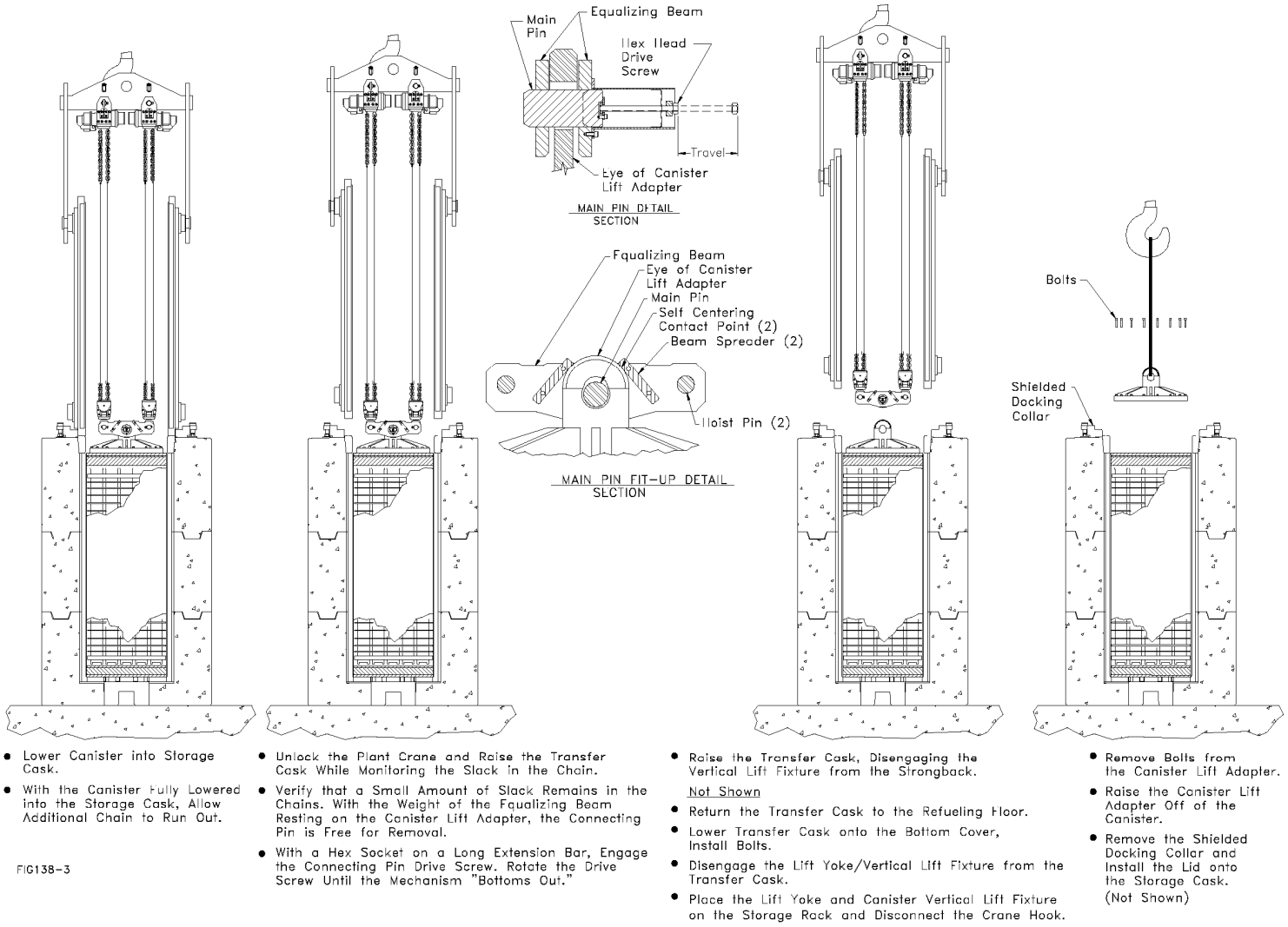

Figure 1.2-29 - Canister Vertical Lift Fixture Operations (3 pages)

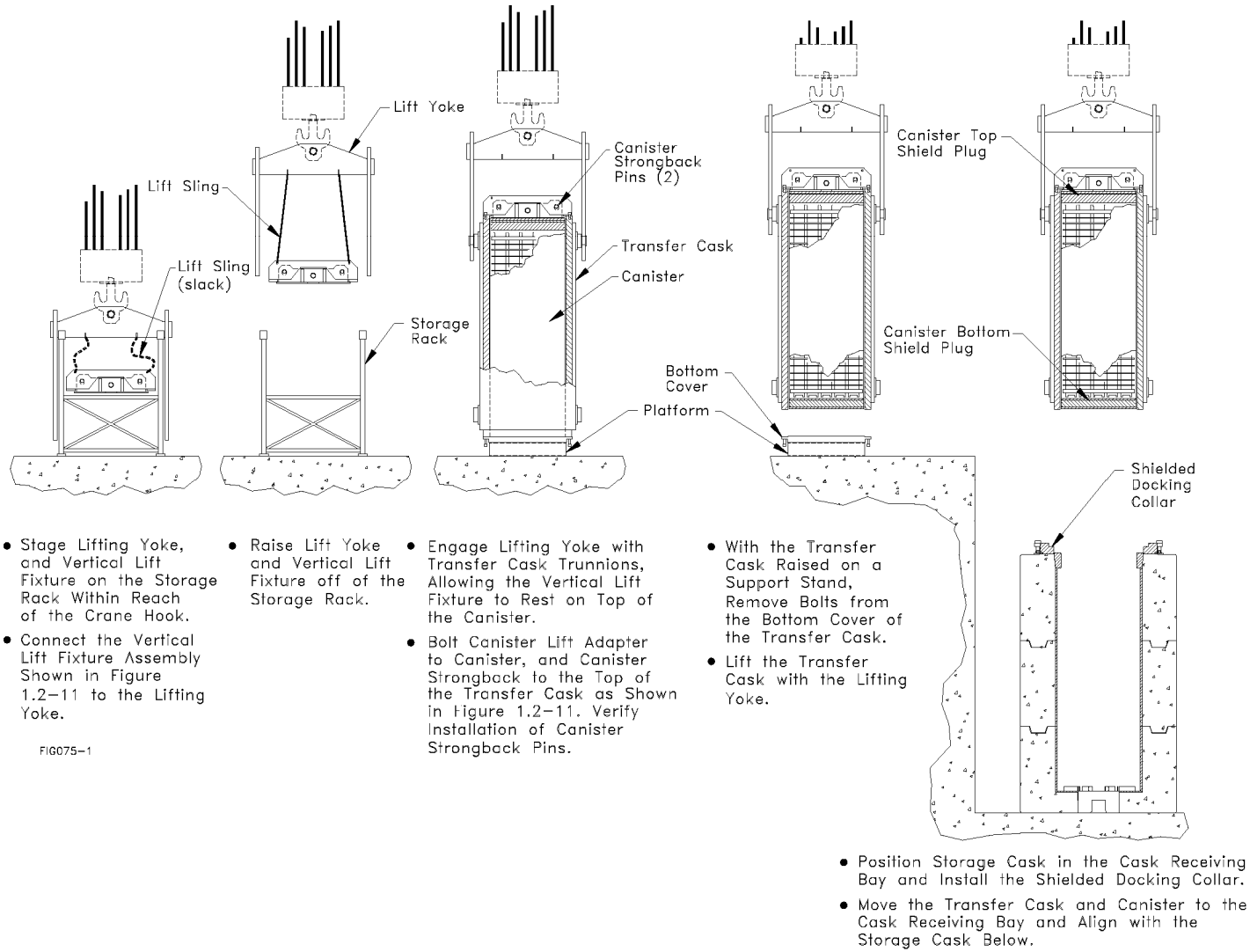

Figure 1.2-30 - Alternate Canister Vertical Lift Fixture Operations (3 pages)

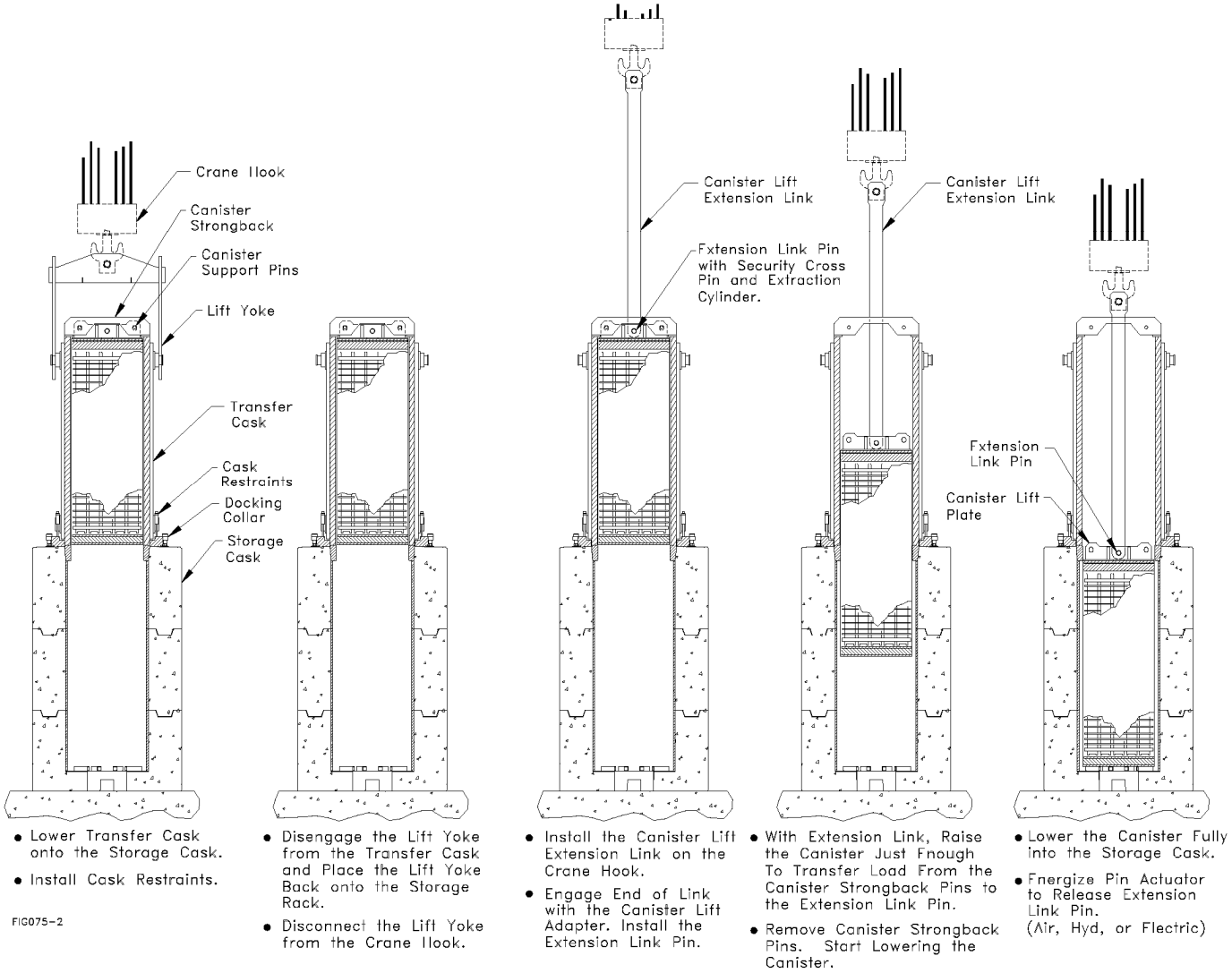

Figure 1.2-30 - Alternate Canister Vertical Lift Fixture Operations (3 pages)

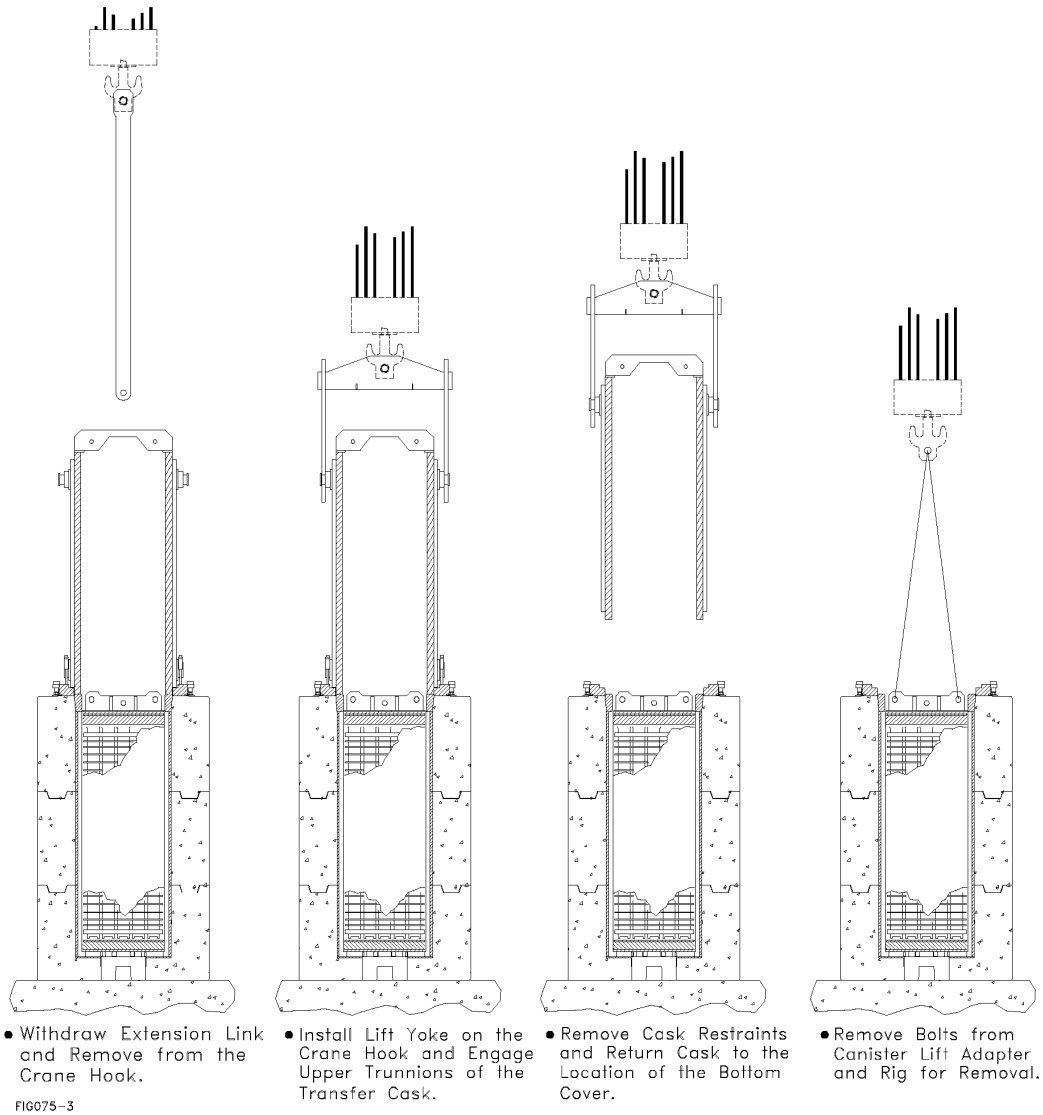

Figure 1.2-30 - Alternate Canister Vertical Lift Fixture Operations (3 pages)

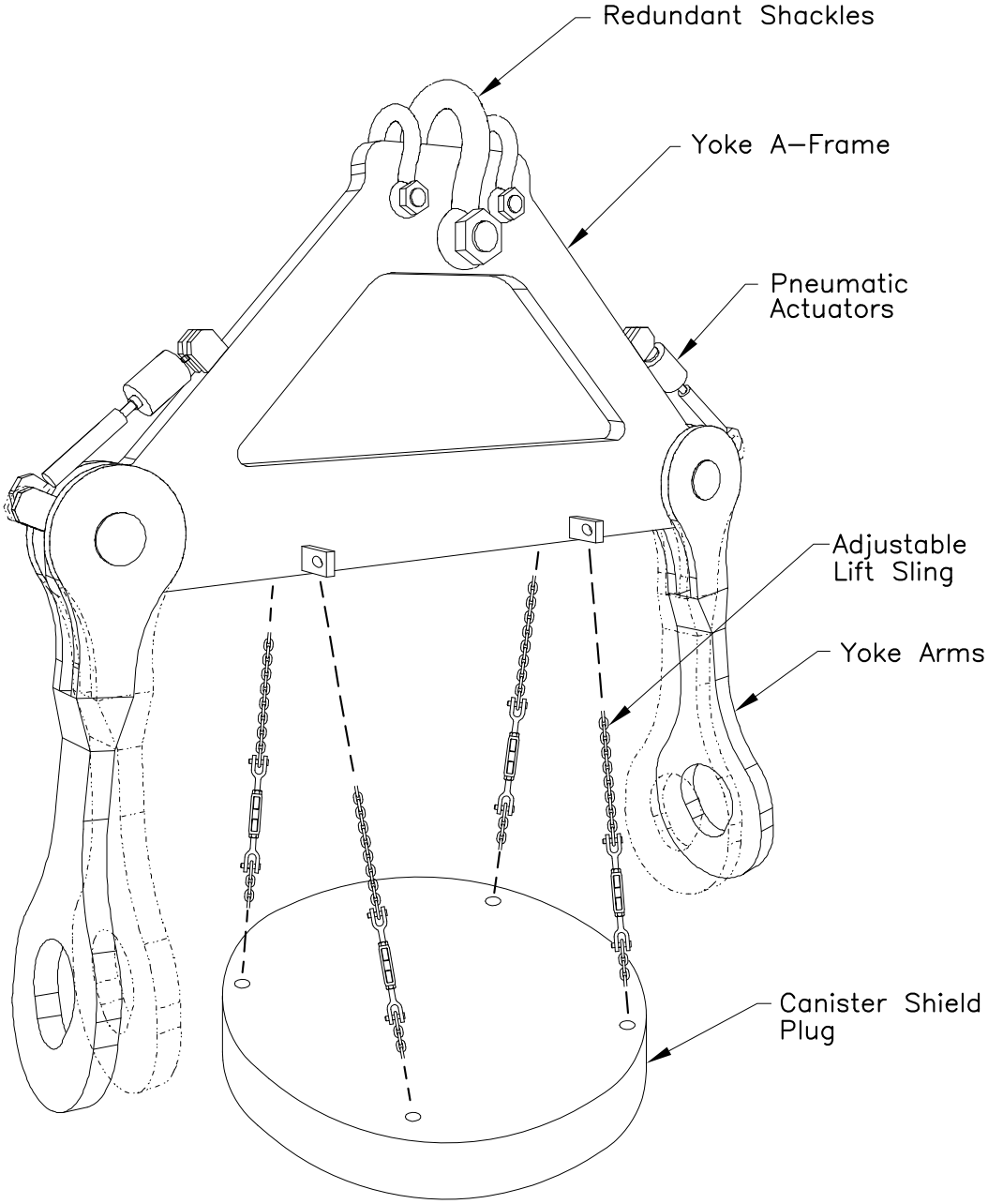

Figure 1.2-31 - Swing-Arm Cask Lifting Yoke

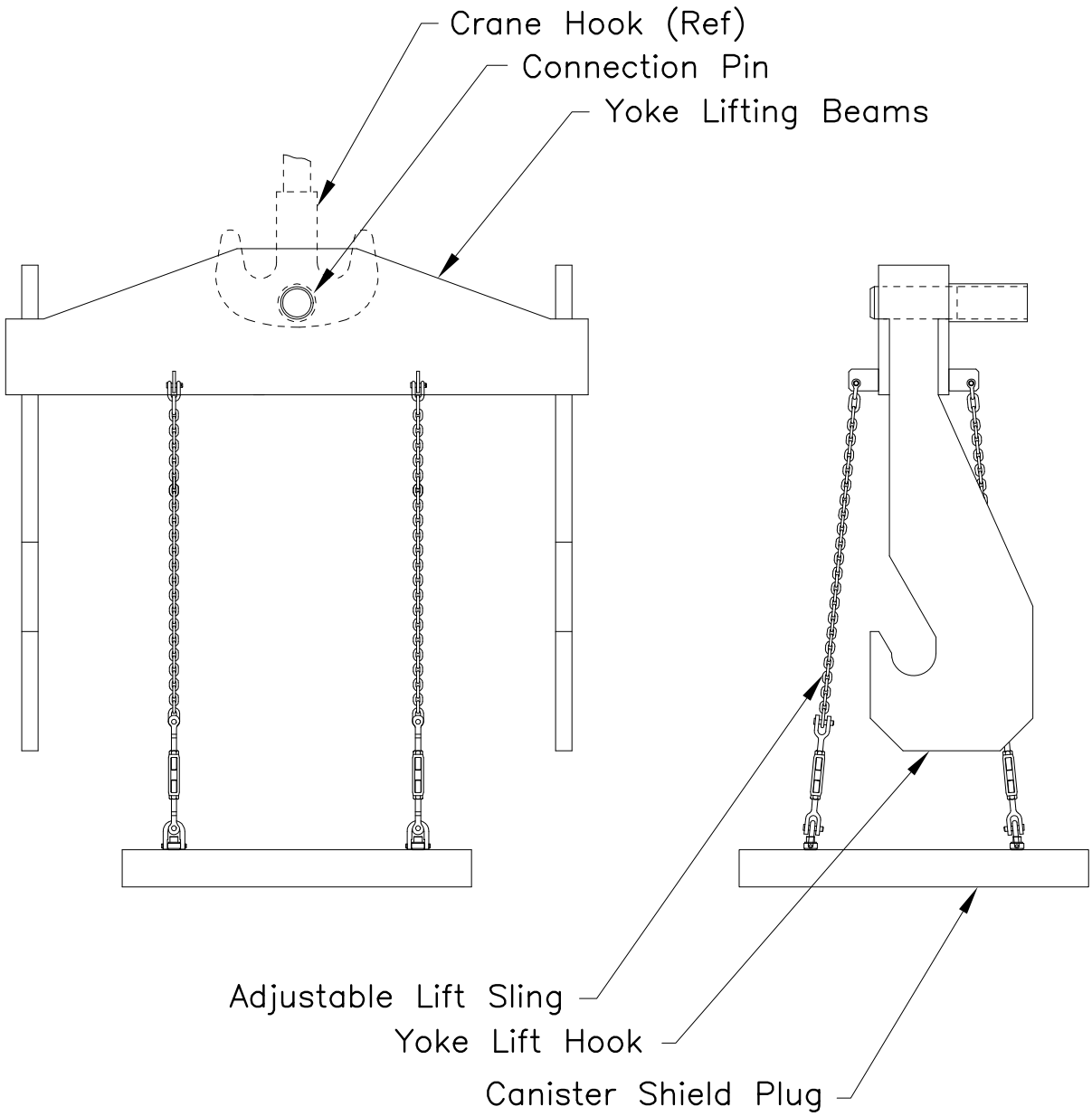

Figure 1.2-32 - J-Hook Cask Lifting Yoke

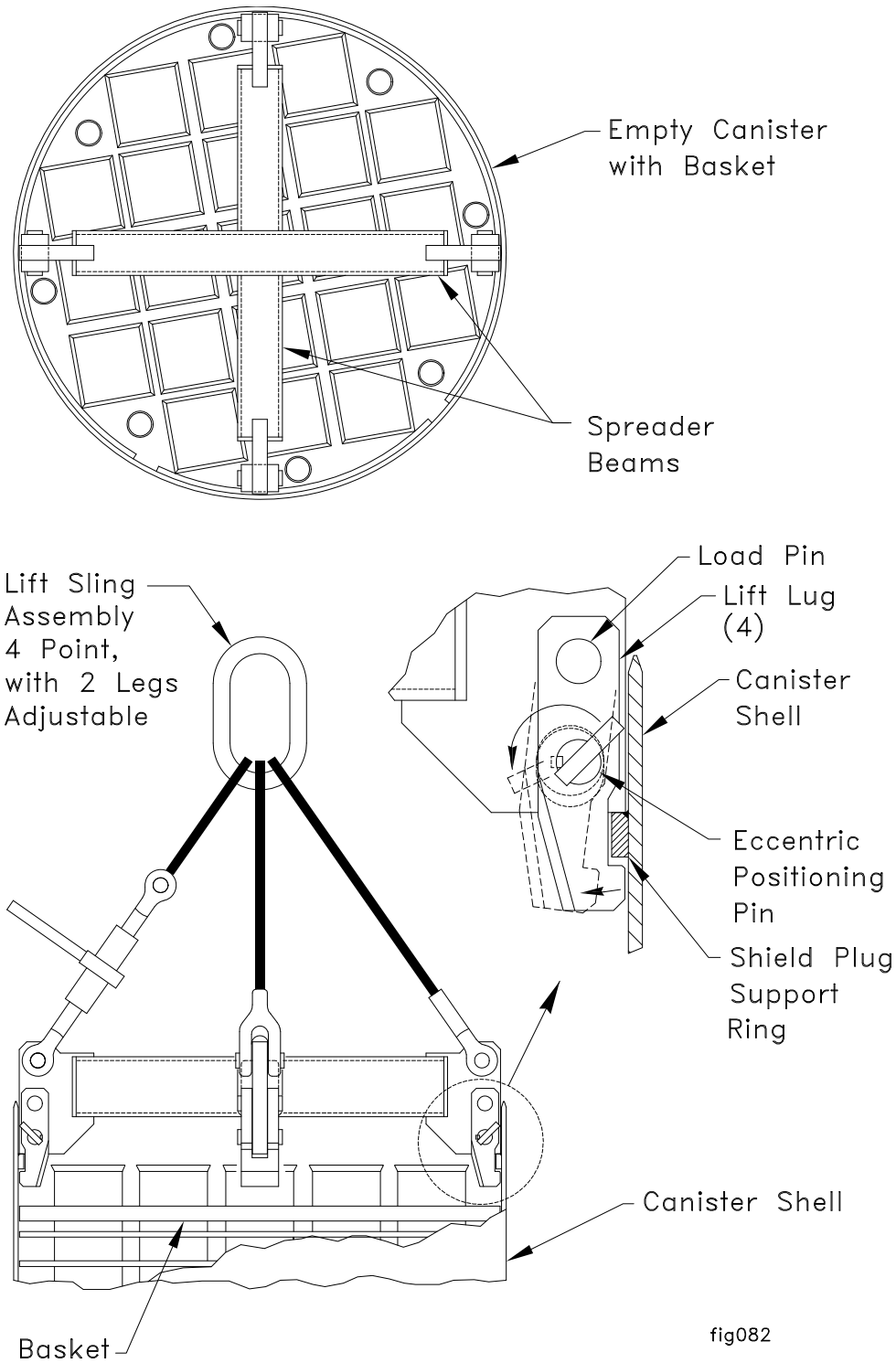

Figure 1.2-33 - Empty Canister Lift Fixture

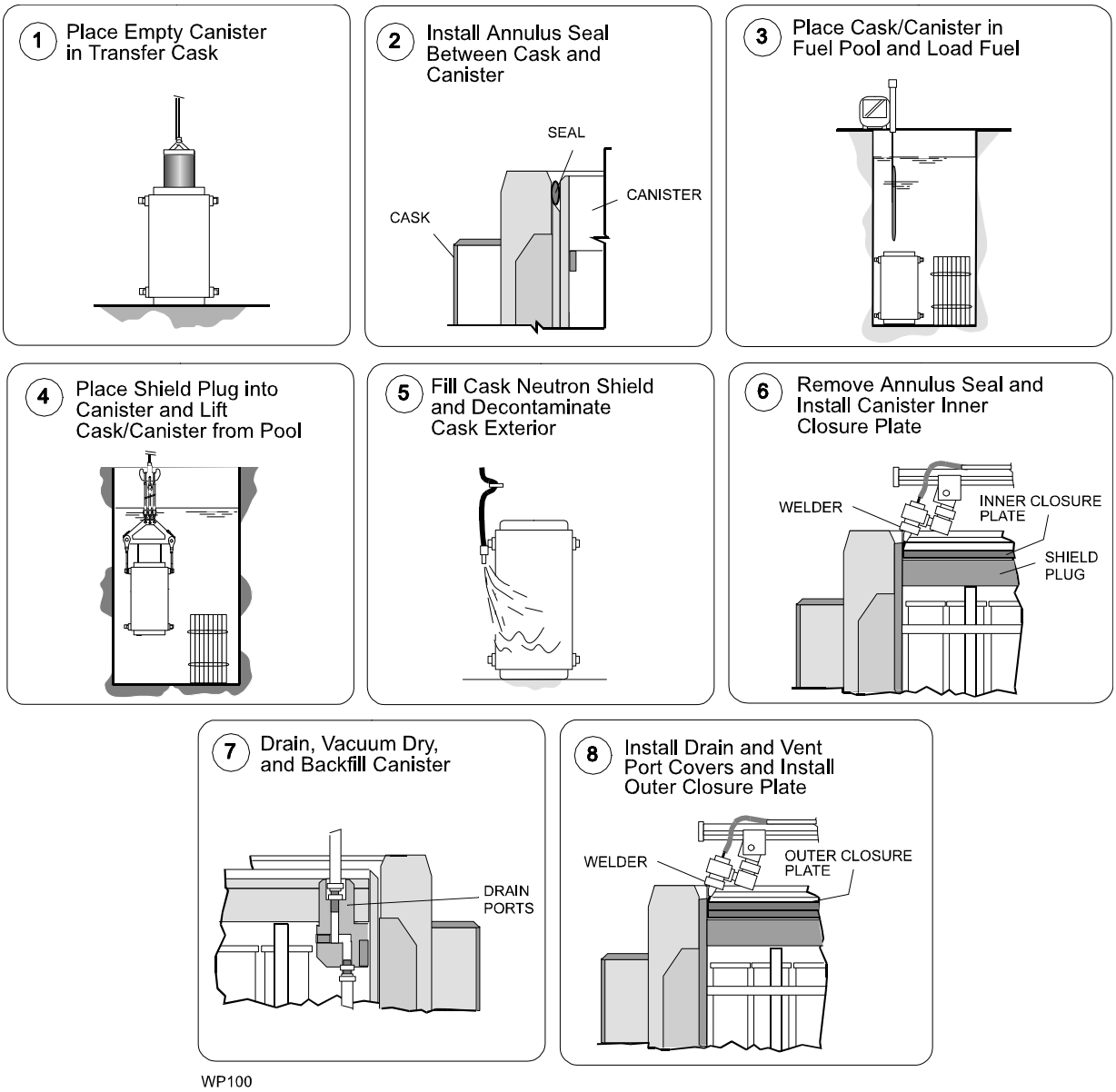

Figure 1.2-34 - Canister Loading and Closure Operations

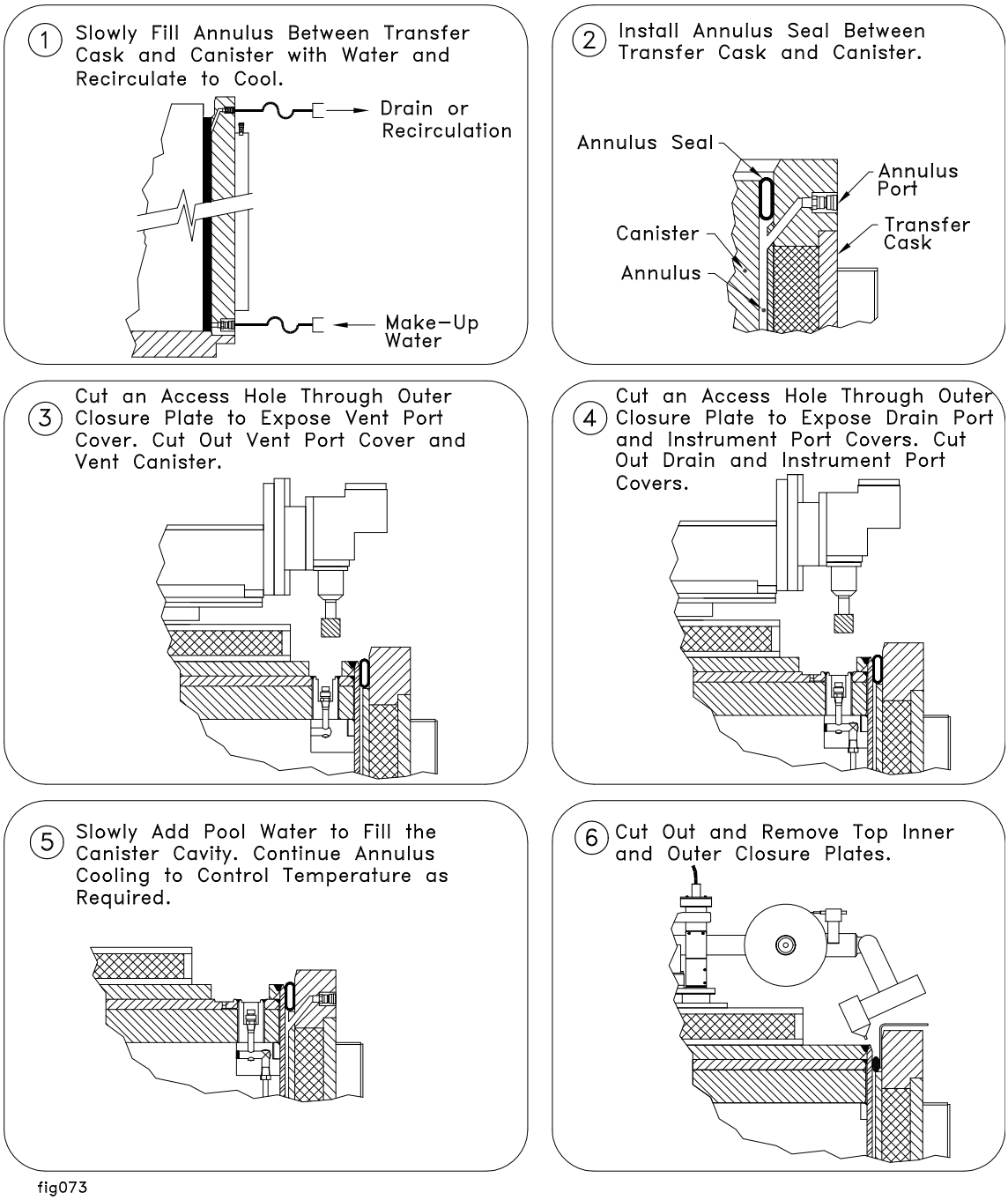

Figure 1.2-35 - Canister Opening Operations

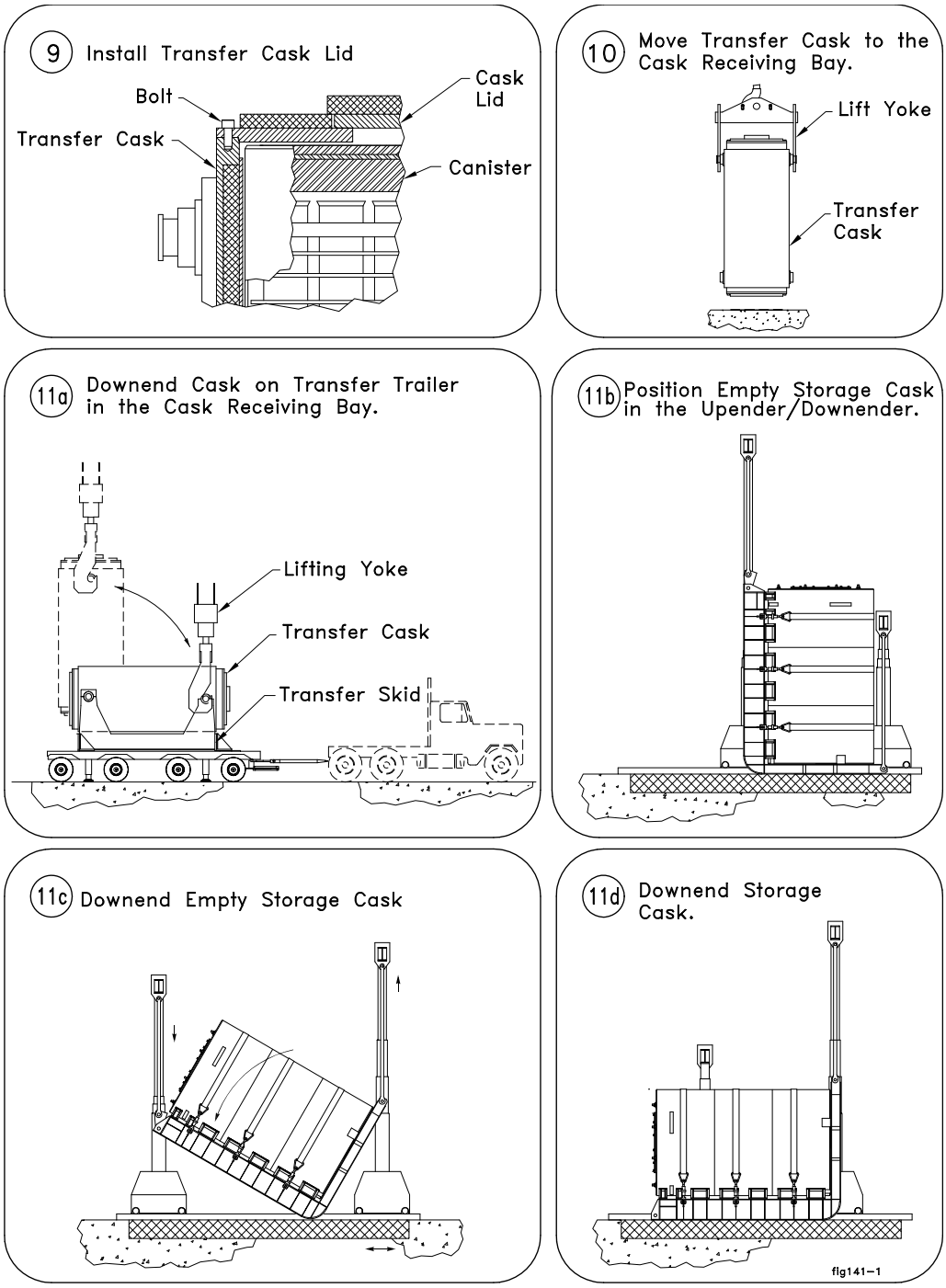

Note: See Figure 1.2-34 for Steps 1-8.

Figure 1.2-36 - Horizontal Canister Transfer Operations (2 pages)

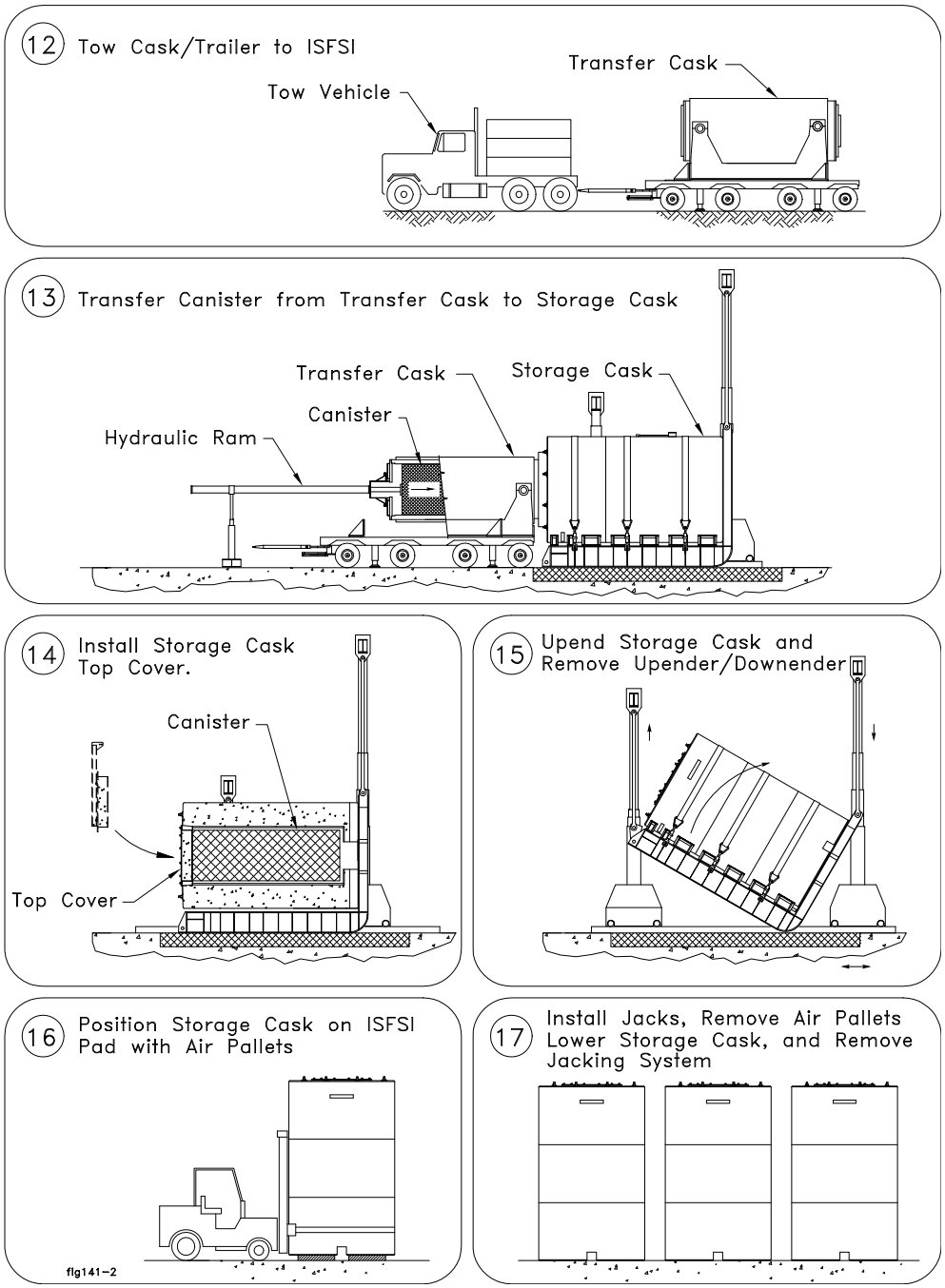

Figure 1.2-36 - Horizontal Canister Transfer Operations (2 pages)

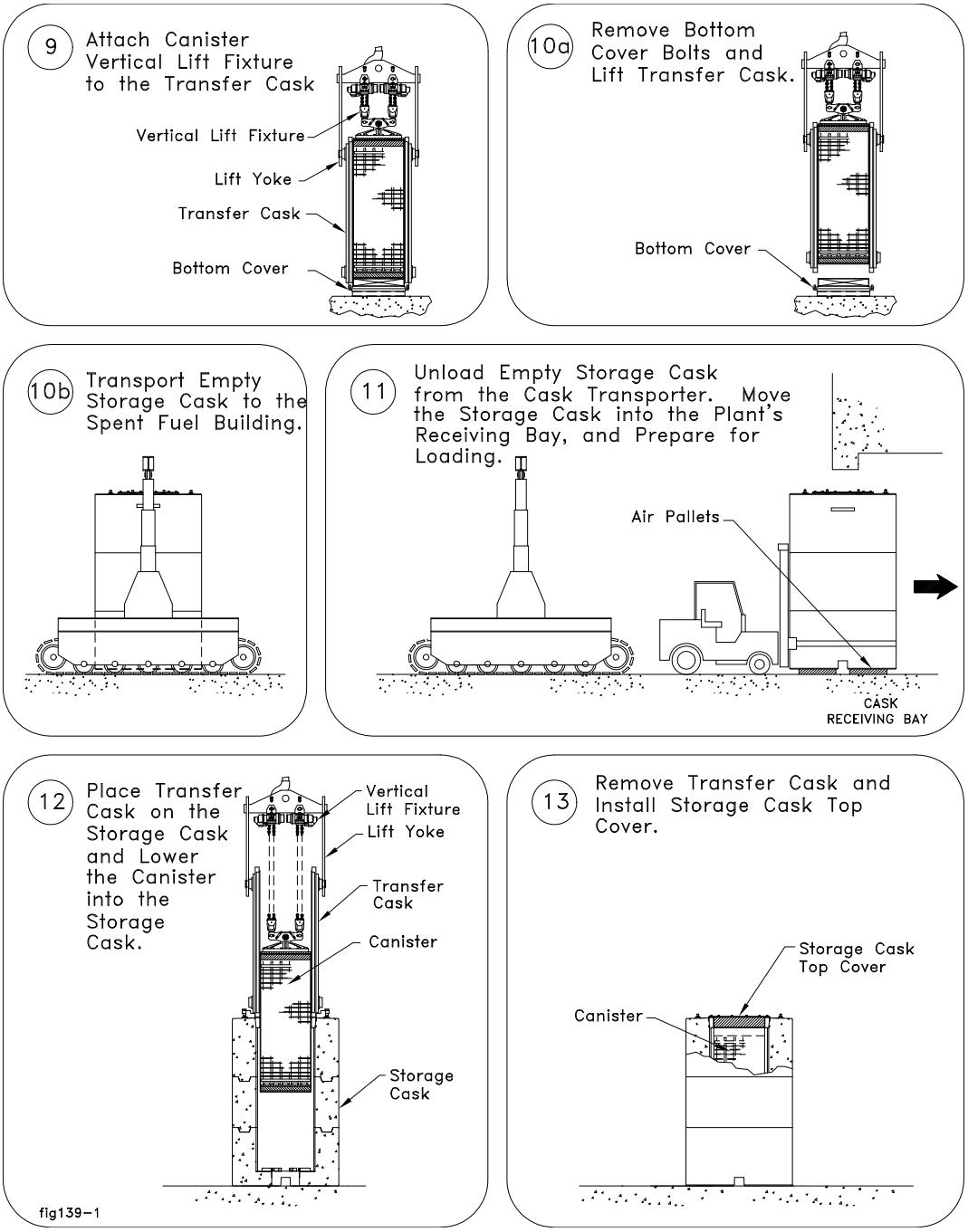

Note: See Figure 1.2-34 for Steps 1-8.

Figure 1.2-37 - Vertical Canister Transfer Operations (2 pages)

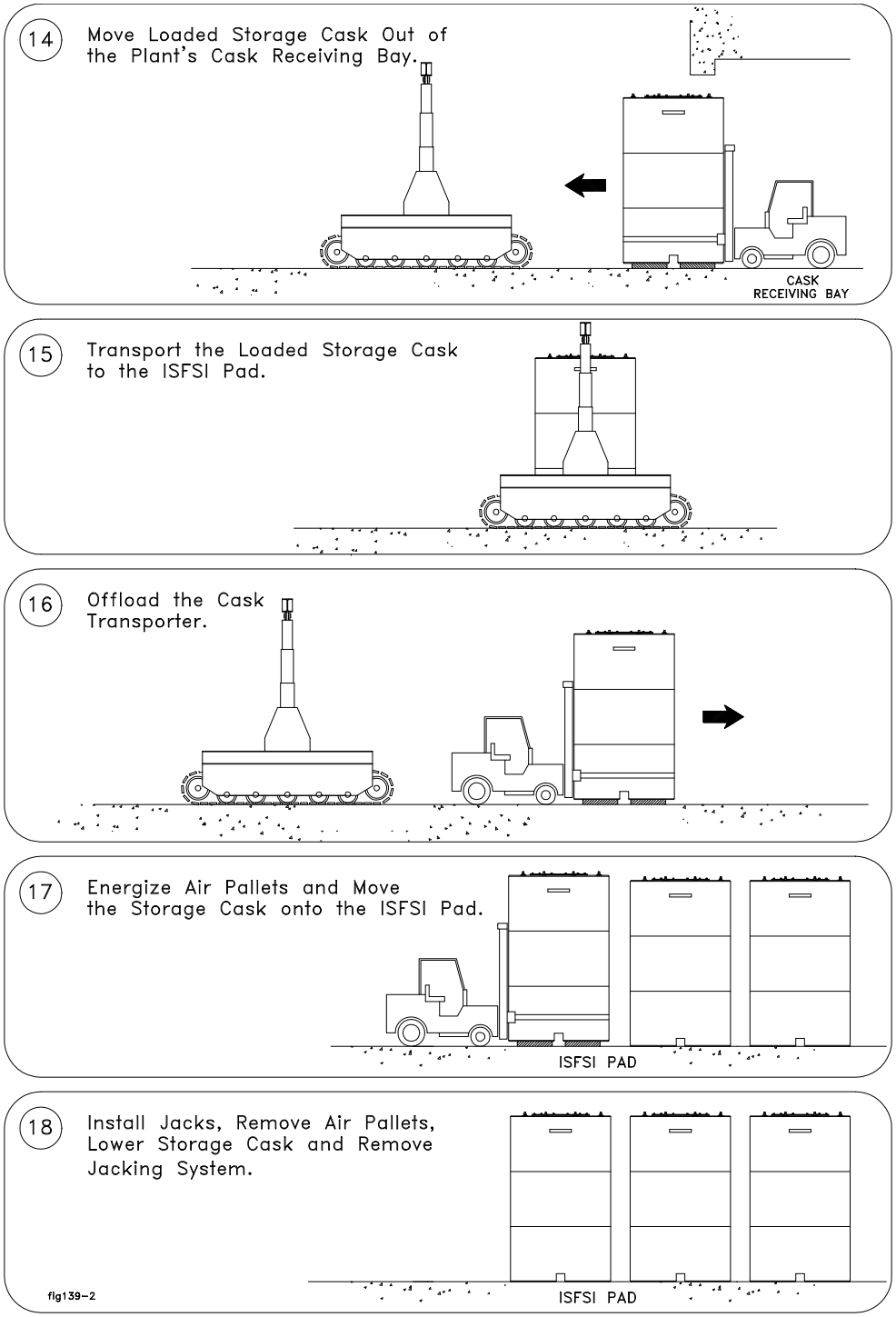

Figure 1.2-37 - Vertical Canister Transfer Operations (2 pages)

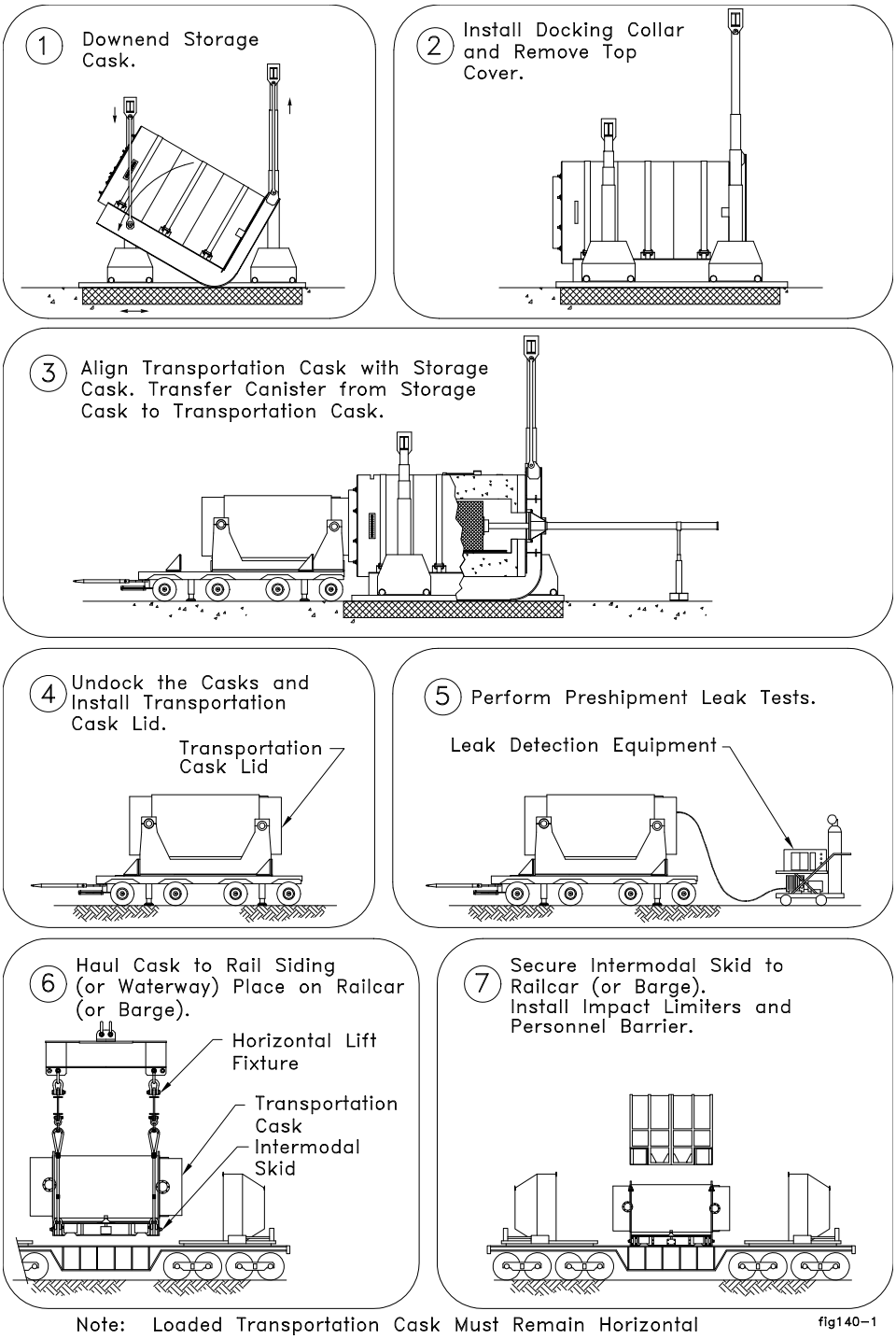

Figure 1.2-38 - Canister Off-site Transportation Operations (2 pages) (Direct Method)

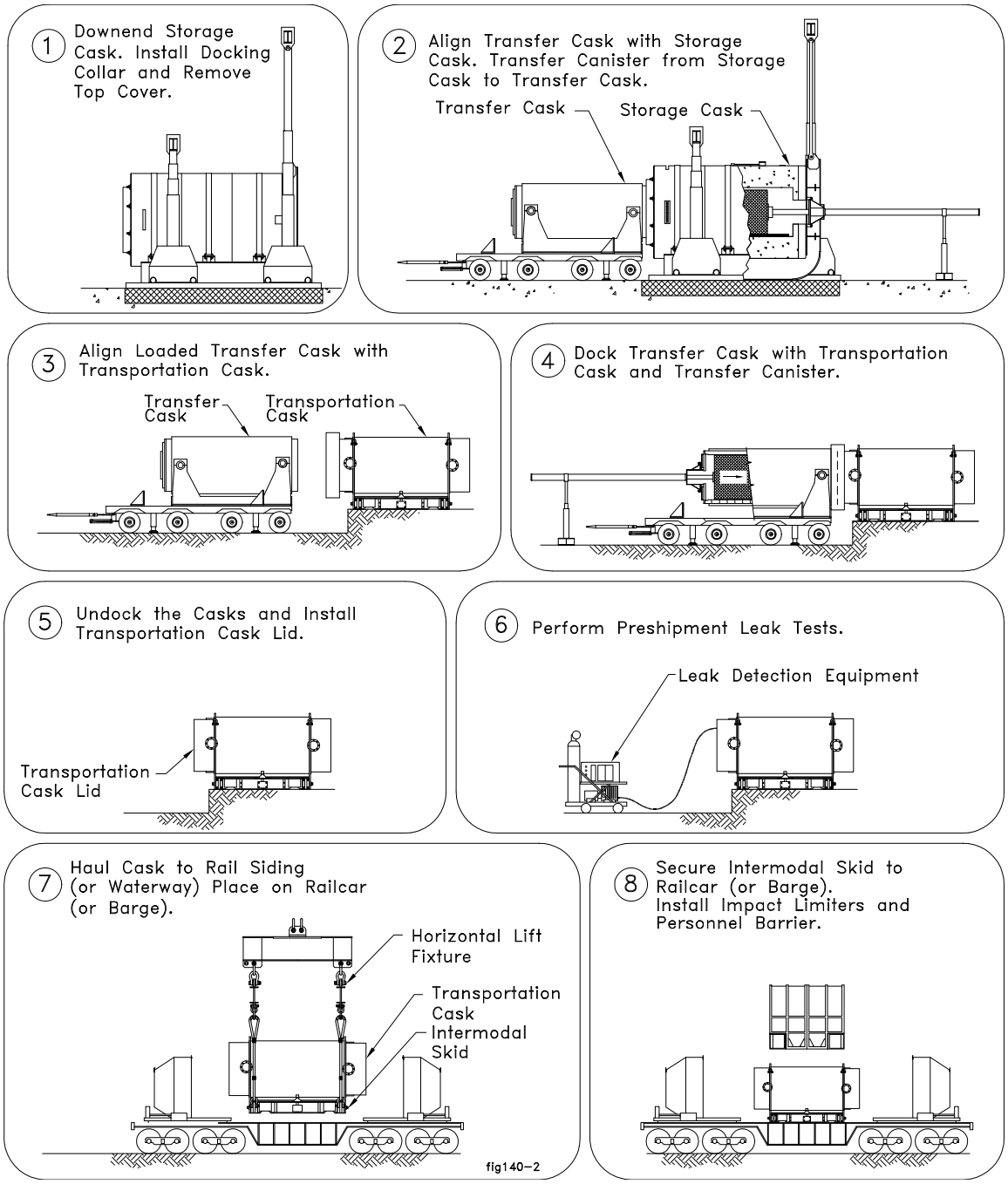

Figure 1.2-38 - Canister Off-site Transportation Operations (2 pages) (Transfer Cask Method)

1.3 Identification of Agents and Contractors

Energy*Solutions* SFD is the prime contractor for design, fabrication, construction, assembly, testing, and operations of the FuelSolutions™ Storage System components. Energy*Solutions* SFD is technically qualified and suitably experienced to conduct these activities and to be the 10CFR72, Subpart L certificate holder for the FuelSolutions™ SFMS.

Energy*Solutions* SFD is an operating subsidiary of Energy*Solutions* LLC, a global company which is a major contributor in the commercial and government nuclear industry.

All components of the FuelSolutions™ Storage System take full advantage of the design, licensing, fabrication, and operational experience gained by the Energy*Solutions* SFD FuelSolutions™ SFMS team at similar installations. This includes demonstration and dry storage programs conducted at the H. B. Robinson, Oconee, Calvert Cliffs, Davis-Besse, Palisades, ANO-1, and Point Beach plants, and fuel shipment programs at numerous facilities.

Fabrication, construction, assembly, and operations may be performed by another licensee as the prime contractor. A licensee shall be suitably qualified and experienced to perform the selected activities. Typical licensees are technically qualified and experienced in commercial nuclear power plant construction and operations activities under a QA Program meeting 10CFR50 Appendix B criteria.

As discussed in Chapter 13 of this FSAR, the Energy*Solutions* SFD QA Program is designed and administered to meet the criteria of 10CFR71, Subpart H and 10CFR72, Subpart G. The Energy*Solutions* SFD QA program is applicable to all design, fabrication, construction, testing, operation, modification, and decommissioning activities that are important to safety. Subcontracting activities for any phase of the project will be controlled by the Energy*Solutions* SFD organization as required, under the Energy*Solutions* SFD QA Program.

The Energy*Solutions* SFD QA Manager reports directly to the Energy*Solutions* SFD President and has the necessary independence, access, and organizational freedom to identify quality issues, coordinate corrective actions, and verify implementation of corrective actions and improvements. The Energy*Solutions* SFD project organization is maintained to provide effective control over activities and to provide the necessary levels of authority and lines of communication. All Energy*Solutions* SFD personnel working on the project are adequately trained on the implementation of applicable portions of the Energy*Solutions* SFD QA program. This Energy*Solutions* SFD organization is responsible for assuring compliance with the requirements of 10CFR72, Subpart G.

This page intentionally left blank.

1.4 On-Site Storage Array Configurations

The FuelSolutions™ W150 Storage Casks are typically arranged on the ISFSI pad in an array consisting of single, double, or multiple rows. The rows are typically separated by an access corridor to provide clearance for storage cask handling, surveillance and maintenance operations. Representative FuelSolutions™ Storage System ISFSI pad layouts are shown in Figure 1.4-1 and Figure 1.4-2. The dimensional information shown, other than the minimum storage cask spacing, is for reference only. Siting of the ISFSI and the actual number of storage casks in the array including the distance between rows and adjacent storage casks and the distance to the ISFSI fence are determined by the licensee to meet plant-specific needs and regulatory dose limits. The ISFSI pad is classified as not important to safety. However, if supplemental engineered features (e.g., earth berms or masonry shield walls) are used for dose mitigation, these features are considered important to safety and must be evaluated by the licensee to determine the applicable graded QA category.

There are no structural, radiological, or criticality safety requirements for minimum or maximum spacing of the FuelSolutions™ W150 Storage Cask on the ISFSI pad, consistent with the supporting safety evaluations documented in Chapters 3, 5, 6 and 11 of this FSAR. A minimum storage cask spacing of 15 feet center-to-center is needed to provide adequate separation between adjacent storage casks for ventilation flow and decay heat removal, consistent with the supporting safety evaluation documented in Chapter 4 of this FSAR. Site-specific spacing requirements are established by the individual licensee based on the plant-specific ISFSI layout and the desired access for monitoring, inspection, maintenance, and handling of the FuelSolutions™ storage casks.

A typical ISFSI pad layout for sites using horizontal canister transfer is shown in Figure 1.4-1. A separate pad located adjacent to the ISFSI pad or away from the ISFSI pad is used as a staging area to conduct horizontal canister transfer operations. For this arrangement, the individual storage casks are air-palleted into position for placement on the storage pad or canister retrieval. A typical ISFSI pad layout for sites using vertical canister transfer is shown in Figure 1.4-2. Storage casks may be transported to and from the ISFSI using the vertical transporter or vertical transport trailer. As for horizontal canister transfer, the individual storage casks are air-palleted into position for placement on the storage pad or retrieval. Alternatively, sufficient storage cask spacing can be provided for direct placement or retrieval of the storage cask in-place on the ISFSI pad using the vertical transporter.

The amount of SNF that may be stored using the FuelSolutions™ SFMS at a single ISFSI site is dependent on plant-specific needs and constraints, the number of fuel assemblies stored within each canister, site-specific dimensional limitations, and compliance with the cumulative off-site dose requirements.

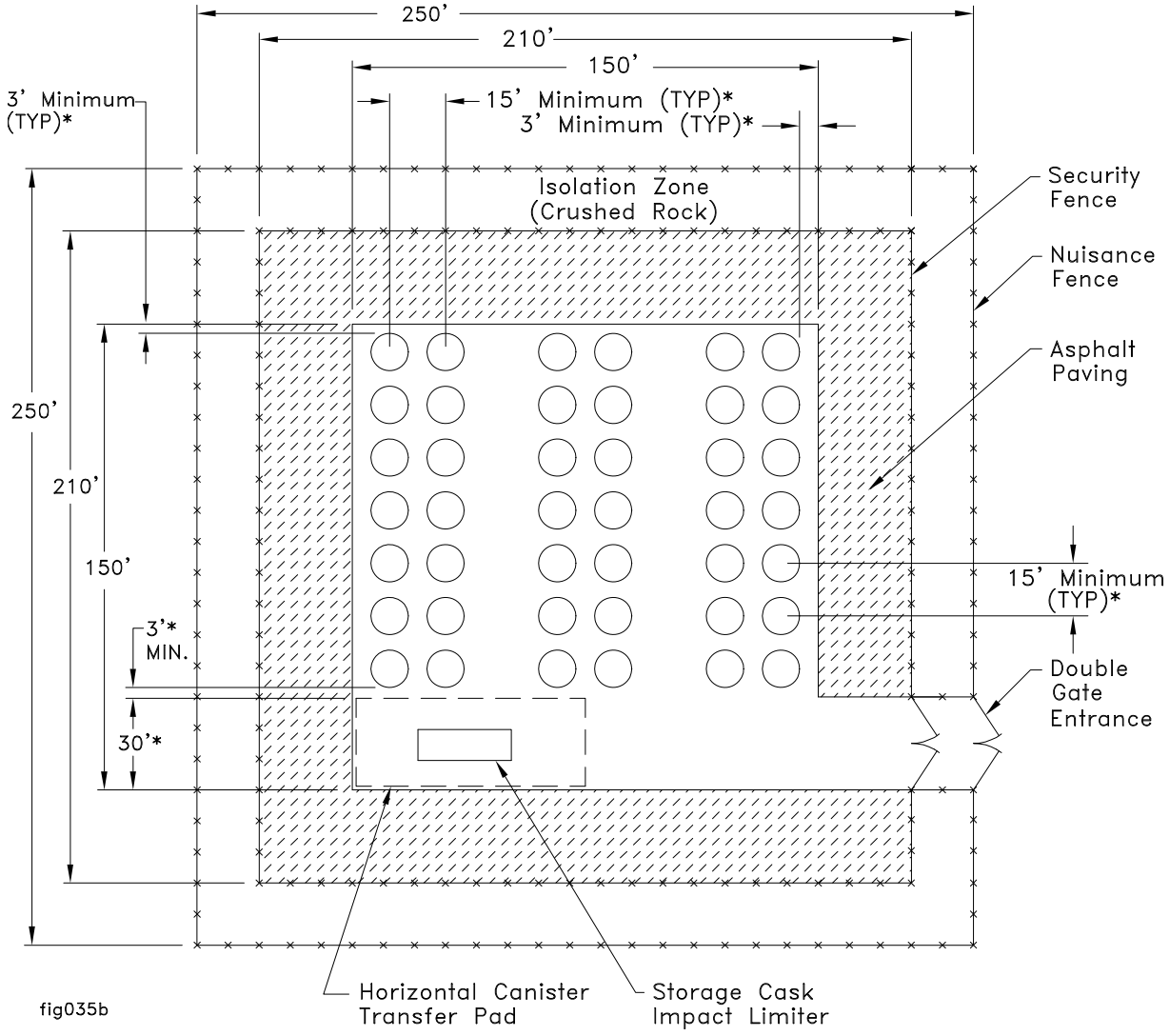

* Required dimensions. All other dimensions are for reference only.

Figure 1.4-1 - Typical ISFSI Layout for Horizontal Canister Transfer*

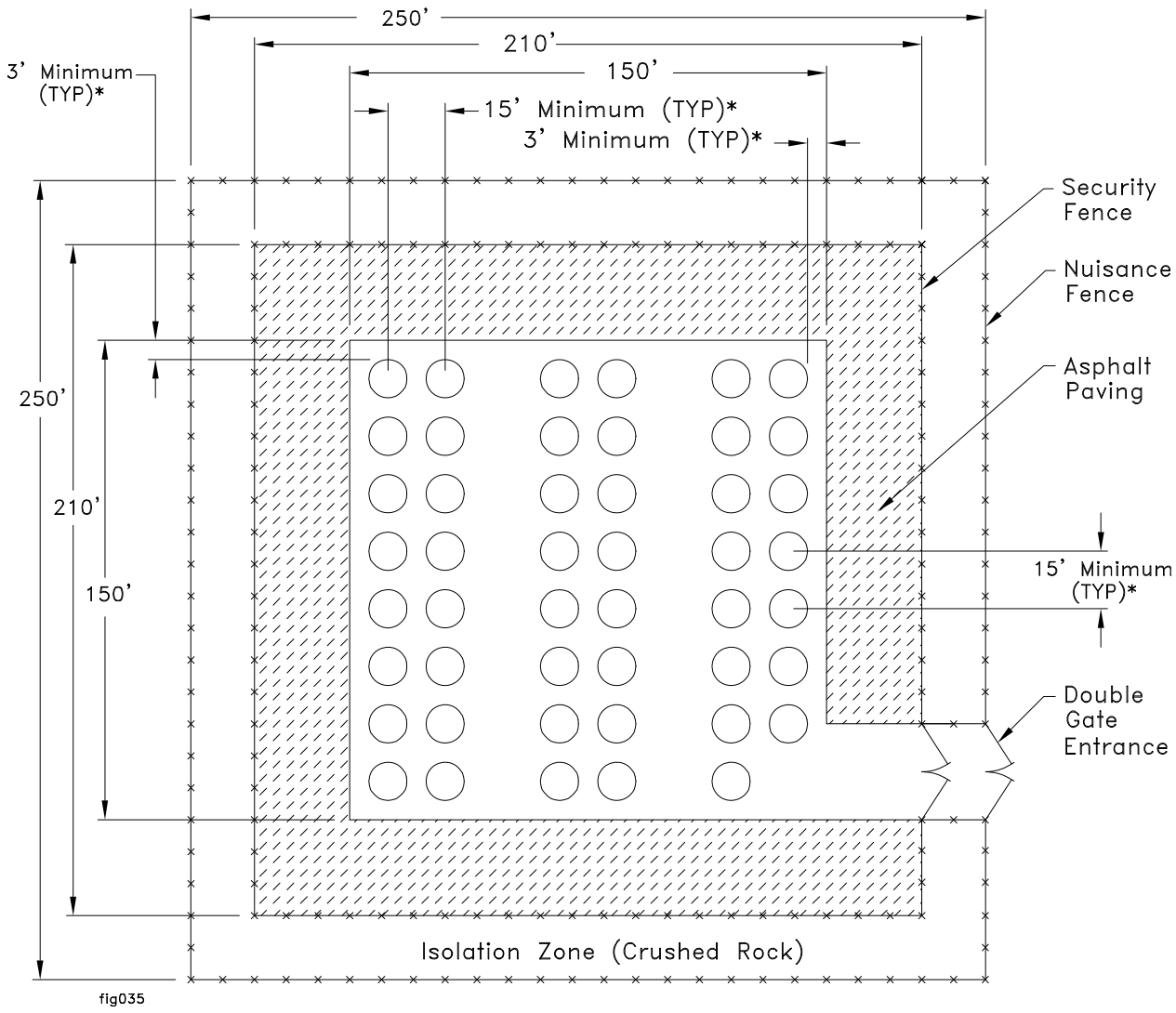

* Required dimensions. All other dimensions are for reference only.

Figure 1.4-2 - Typical ISFSI Layout for Vertical Canister Transfer*

This page intentionally left blank.

1.5 Supplemental Data

1.5.1 Drawings

General arrangement drawings of the FuelSolutions™ W150 Storage Cask, W100 Transfer Cask, and the W150 Storage Cask Impact Limiters are provided in this section.

1.5.1.1 W150 Storage Cask

The drawings for the FuelSolutions™ W150 Storage Cask include the following:

Title	Number	Revision
FuelSolutions™ W150 Storage Cask Assembly	WE-310	4

Drawings withheld on the basis that they contain "Security-Related Information"

This page intentionally left blank.

1.5.1.2 W100 Transfer Cask

The drawings for the FuelSolutions™ W100 Transfer Cask include the following:

Title	Number	Revision
FuelSolutions™ W100 Transfer Cask Assembly	WE-410	4
FuelSolutions™ W100 Transfer Cask Shell Assembly	WE-420	5
FuelSolutions™ W100 Transfer Cask Top & Ram Access Cover Assemblies	WE-430	3
FuelSolutions™ W100 Transfer Cask Bottom Cover Assembly	WE-440	4

Drawings withheld on the basis that they contain "Security-Related Information"

This page intentionally left blank.

1.5.1.3 W150 Storage Cask Impact Limiter

The drawing for the FuelSolutions™ W150 Storage Cask Impact Limiter is as follows:

Title	Number	Revision
Cask Handling Area Impact Limiter	000-00-261	2

Drawings withheld on the basis that they contain "Security-Related Information"

This page intentionally left blank.

1.5.2 Product Literature

1.5.2.1 Storage Cask Impact Limiter Polyurethane Foam

Literature describing the polyurethane foam material used for the storage cask impact limiter is provided in this section (13 pages).

This page intentionally left blank.

GENERAL PLASTICS
MANUFACTURING COMPANY

LAST-A-FOAM® FR-3700 FOR 10CFR71 CRASH & FIRE PROTECTION APPLICATIONS

Product Description:

LAST-A-FOAM® FR-3700 rigid polyurethane foam is *engineered* to enhance strength and fire resistance. It is a closed-cell, CFC-free polyurethane foam available in densities from 3 to 40 lbs/cu ft. The last two digits of product numbers represent density.

In addition to its use in nuclear shipping containers, LAST-A-FOAM® FR-3700 has many uses in Commercial Aircraft, Military, Construction, Marine, Industrial, and other Nuclear applications.

Application Examples:

- AL-SX, a 16 gallon stainless steel drum overpack assembly. A total of 2400 units produced from October 1991 to March 1993.
- ONC, A large 96" Dia. X 120" long container for chemical munitions destruction program. Three prototypes foamed, production of 38 units to start summer 1993.
- MH-2800, A medium sized 30" Dia. X 42" container with five machined foam components per unit. Two hundred sets (1000 parts) produced in 1991 and 1992.
- TRUPACT II, A large 96 "Dia. X 120" container for transportation of transuranic waste to the WIPP repository in New Mexico. Thirty-three units produced 1988 to 1991.
- UX-30, A 44" Dia. X 96" container for UF_6 transportation. Ninety units produced over the past ten years.
- Various quantities of approximately 20 different designs of impact limiters, overpacks, impact pads, and missile shock isolation pads manufactured over the past 20 years.

Available Forms:

LAST-A-FOAM® FR-3700 is available in foamed in place applications, machined foam parts, and fabricated assemblies. All foam production is accomplished at our manufacturing facility in Tacoma, WA.

Quality Assurance:

General Plastics has excellent laboratory, product development and quality assurance facilities including a fully instrumented 36 foot guided wire drop tower and a laboratory scale burn test facility. We have assisted many customers in achieving a robust design in containers using LAST-A-FOAM® FR-3700. We are currently qualified under such demanding quality systems as NQA-1, Mil-I-45208, Boeing Company D1-9000, and many other. We are preparing to meet ISO-9000 requirements at this time.

Our philosophy: Quality — First, Last, Always.

For Additional Information or application assistance, please call (206) 473-5000, 8AM to 5PM Pacific Time.

This page intentionally left blank.

Reprinted from MACHINE DESIGN February 7, 1991.

FOAM PROTECTS WASTE CONTAINERS FROM FIRE AND SHOCK

Stainless-steel containers used to transport radioactive waste are shielded with a polyurethane foam.

Radioactive waste often must be transported thousands of miles from source to storage. The containers used must withstand impact, fires, and submersion in water. Trupact-II containers are made of two stainless-steel vessels, one inside the other, both sealed and not vented. Key to protecting the waste, and anyone near an accident involving a container, is a 10-in.-thick layer of rigid polyurethane foam sandwiched between the outer vessel and the container's stainless-steel outer skin. The foam is called Last-A-Foam and is produced by General Plastics Manufacturing Co., Tacoma, WA.

The closed-cell foam swells and chars when exposed to flame, rather than shrinking, cracking, or melting. The swelling seals any cracks or punctures in the outer vessel, which stops air that would sustain burning from entering the cavity. The char from the foam breakdown insulates the interior because it has very low thermal conductivity and heat capacity. In a fire, once the char seals off a cavity from oxygen, chemical bonds in the foam break down in an endothermic reaction to produce a gas which is then vented from the container. Venting is crucial because it removes much of the heat and relieves pressure. Other types of insulation retain heat, resulting in higher peak temperatures.

The Trupact-II containers, from Nuclear Packaging, hold transuranic (TRU) waste — material contaminated with radioactive elements heavier than uranium. Much of this type of waste is gloves, shoe covers, lab coats, and wornout tools, and emits only alpha radiation. The 3% of TRU waste that emits beta and gamma radiation must be heavily shielded and cannot be transported in Trupact-II containers.

Trupact-II containers are used to ship barrels of

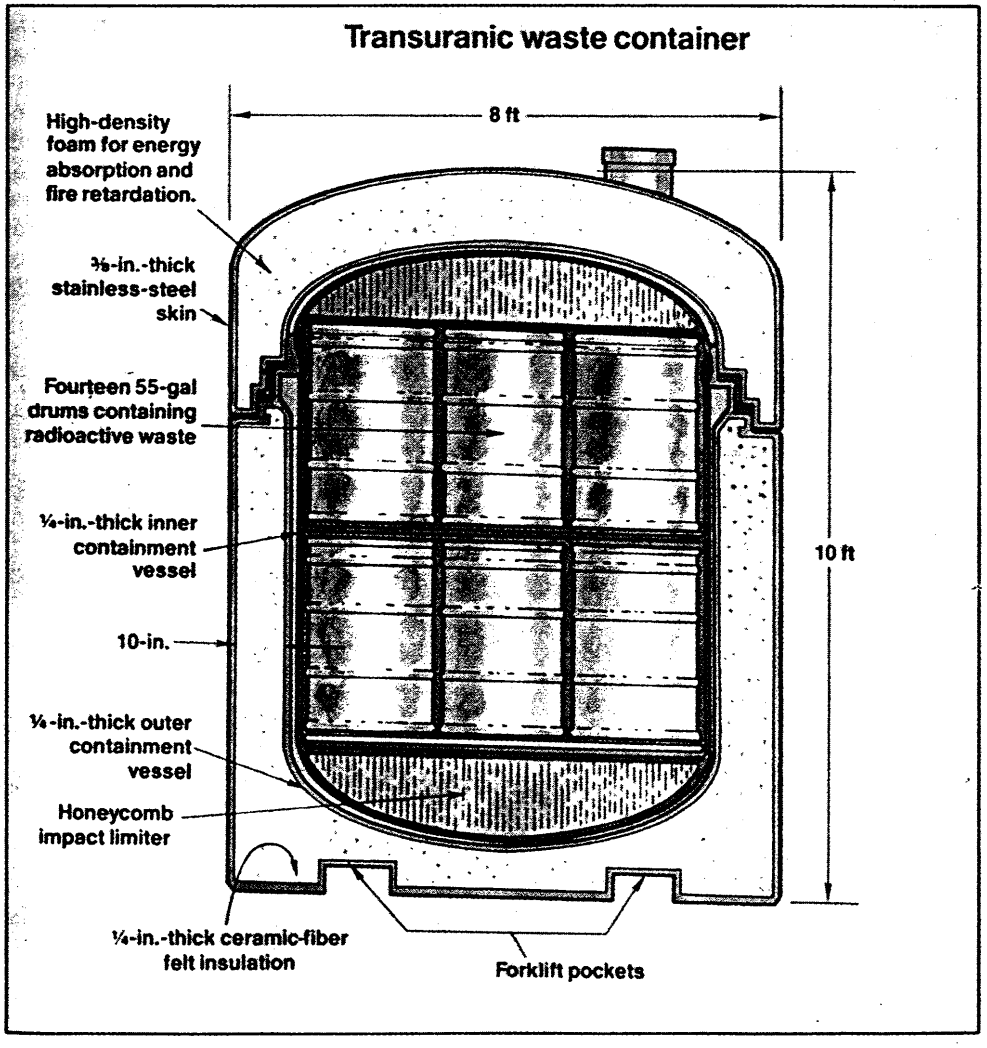

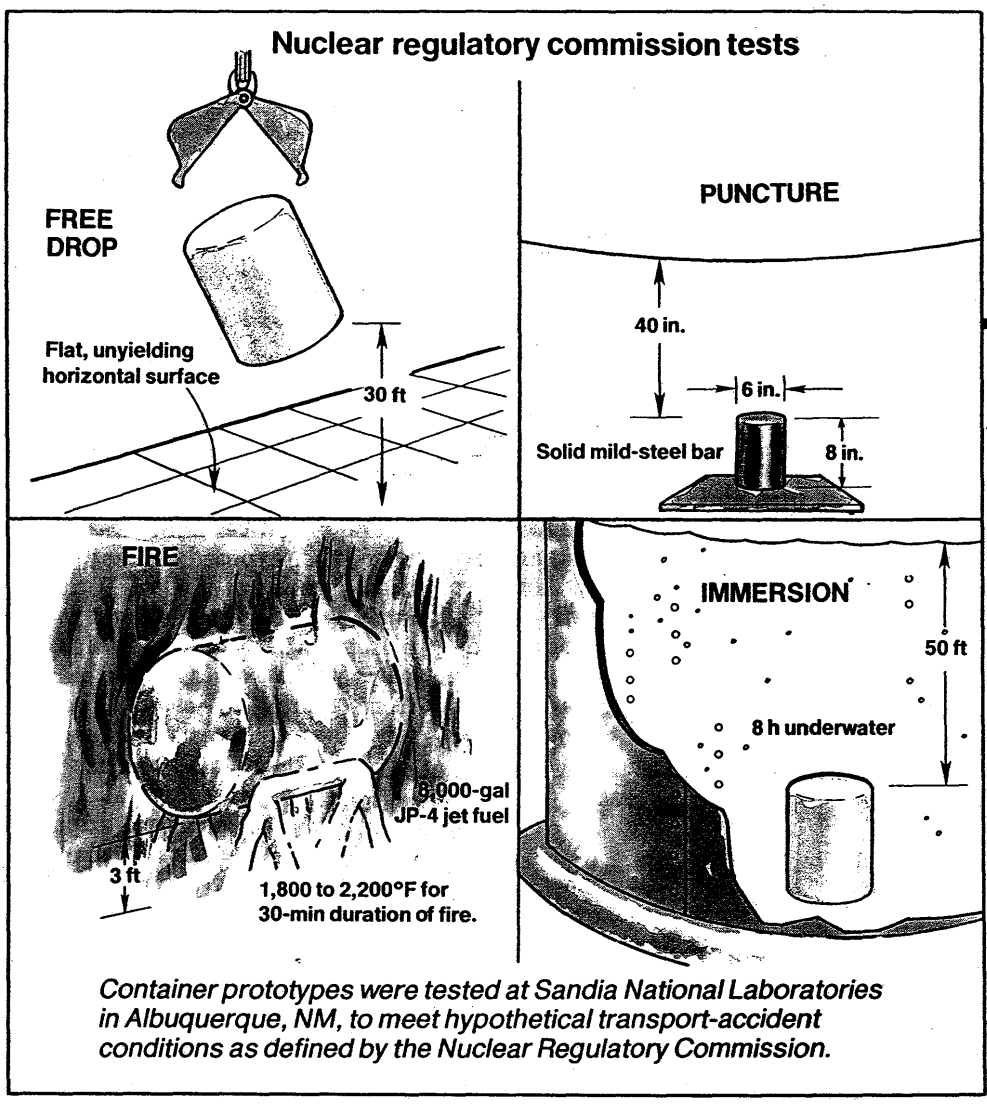

Container prototypes were tested at Sandia National Laboratories in Albuquerque, NM, to meet hypothetical transport-accident conditions as defined by the Nuclear Regulatory Commission.

radioactive waste from national defense facilities to the Waste Isolation Pilot Plant in Carlsbad, NM. There, the containers are unloaded to be reused. The Pilot Plant is run by Westinghouse for the Department of Energy to demonstrate that TRU waste can be stored safely in an underground salt formation. After five years, the barrels will be removed and the site tested. If the government decides to store TRU waste at this location permanently, the facility will operate as a repository for an additional 20 years. Current estimates are for over 15,000 shipments to be made in the next 25 years.

Polyurethane foam swells and chars when exposed to flame. After 30 min in a fire, the container has one charred area on its side where the outer skin ruptured, and another at the vent hole on top. After the fire, 50% of the foam was intact. During the fire, the temperature of the O-ring seals peaked at 260°F, and the temperature of the test load peaked at 170°F. Wiring coming out the end of the container leads to pressure and temperature instrumentation.

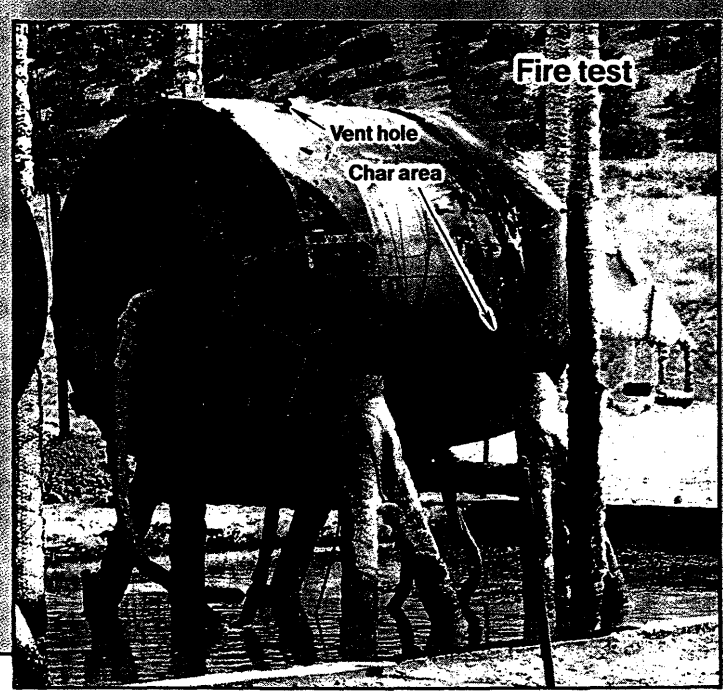

Copyright © 1993 by Penton Publishing, Inc.,Cleveland, Ohio 44114

Presented to the11th International Conference on the Packaging and Transportation of Radioactive Materials (PATRAM'95), December 1995

RIGID POLYURETHANE FOAM FOR IMPACT AND THERMAL PROTECTION

F. P. Henry & C. L. Williamson
General Plastics Manufacturing Co., Tacoma, WA
Tel. 206-473-5000 Fax 206-473-5104

INTRODUCTION

Polyurethane foam has been used as a protective medium in nuclear material transportation containers for over 30 years. Other materials used in containers are woods, cork, cellulose fiber, honeycomb, metal fabrications, and other foam types. These other materials have one or more inherent drawbacks including: cost, availability, difficulty of fabrication, uniaxial protection, and poor thermal resistance. The use of polyurethane foams can free the container designer from many of these constraints since the polyurethane foam can be engineered to meet a wide range of impact situations and to provide significant thermal protection. System costs of polyurethane foam are very competitive, especially with in situ (pour-in-place) foam application. The particular foam we will refer to is LAST-A-FOAM FR-3700/FR-6700 rigid polyurethane foam.

IMPACT PROTECTION

To accommodate the wide variety of impact energies to be absorbed the designer must first define the requirements. Of primary importance is the determination of the maximum allowable stress the payload can withstand. Other factors which must be considered are ambient temperatures, radiation exposure, thermal load, handling, moisture exposure, weight constraints, package size, cost, and safety factor.

Protection is achieved by dissipating the kinetic energy available just prior to impact in a way that minimizes the forces which could destroy the package and release the payload to the environment. Since the mass of the payload is often fairly constant we can simplify the analysis by focusing on deceleration.

Most people think of soft, squishy, flexible things when they think of foam. When dealing with low energy levels that is exactly what is required, a nice soft cushion to keep things from breaking. However, for high energies the soft cushions are useless or worse. They can bottom out and rebound.

It is important to keep in mind that ONLY DISTANCE CAN MITIGATE IMPACT. The first determination must be how much deceleration distance is necessary to reduce forces to safe levels. A theoretically perfect cushion material would decelerate a payload uniformly through 100% of its thickness. Typical cushion materials have efficiencies of one quarter to one half of the perfect cushion. This means that actual deceleration will be two to four times theoretical.

If the deceleration distance is adequate, the next step is to determine if the energy levels are within the absorbing range of the foam. If the foam is too weak, little or no deceleration will occur upon deflection (but a great deal will occur upon bottoming with resulting high stress). If the foam is too strong little deflection and high deceleration will occur again with resulting high stress. This is where the versatility of polyurethane foam becomes apparent. The designer has a wide range of energy absorbing densities from which to choose.

The following example was developed from an actual application:

A 10-in diameter, 700-lb object falls 30 ft onto a 5-in foam pad.
What foam density would be recommended?
What is the maximum predicted decceleration (g)?

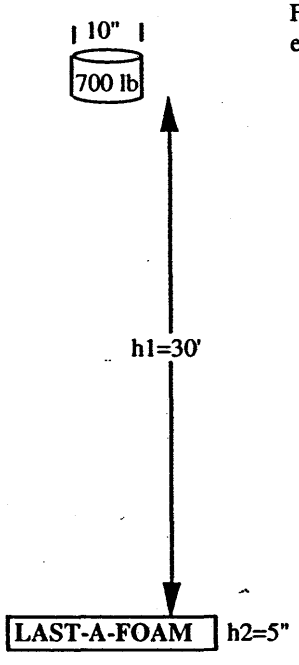

From conservation of energy:

$$\cancel{m}\cdot g \cdot h1 = \cancel{m}\cdot A \cdot h2$$

$$A = h1/h2 \cdot g \text{ (theoretical)} \quad = \frac{30\,(12)}{5} = 72g$$

The theoretical value is not possible since the cushion material prevents the object undergoing deceleration from using all of the available distance. Realistic decelerations are about 3 times theoritical. $A \approx 216g$ in this example.

Next determine volume of foam absorbing the impact. In this illustration simply assume that the area of the falling mass will be stopped by a like area of foam times thickness. The kenetic energy at point of impact is:

700 lb x 30 ft = 21,000 ft-lb which will be absorbed by

π (5")(5")(5") = 392.7 cu in of foam.

Assuming that the anticipated deceleration of 216g is acceptable we can now choose the foam density. If we assume a constant impact footprint then the stress/strain curve is directly proportional to the force acting on the package as the foam crushes. By integrating the stress/strain curve for various foam densities and multiplying the result by the impact area we can determine the amount of energy a given volume of foam will absorb when crushed to a specified deflection. In the following chart the shaded area

under each curve represents an equal amount of energy absorbed by crushing an equal volume of each of the three foam densities to the deflection shown.

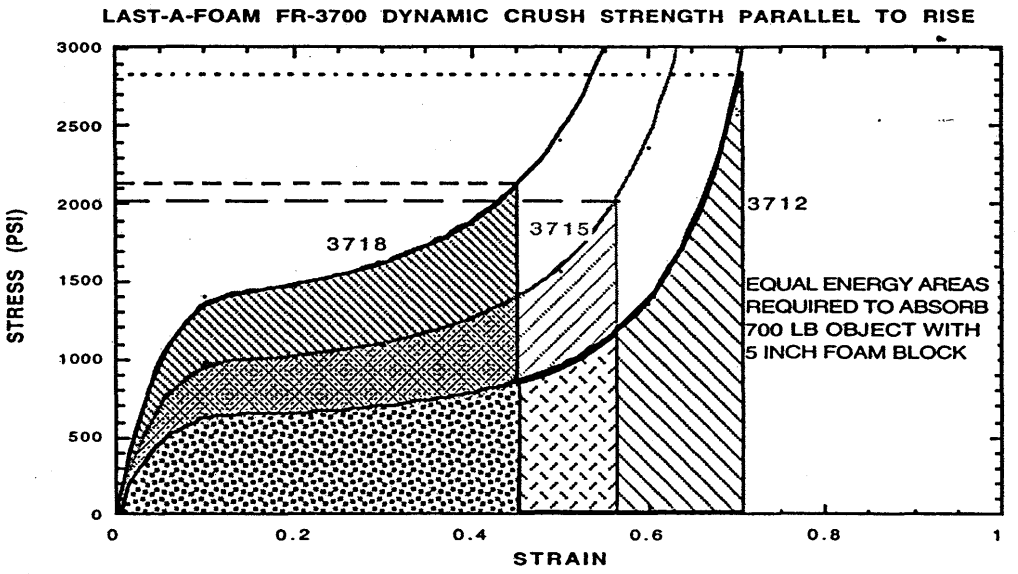

If we had a perfect cushion we could stop the 700-lb cylinder in 5 inches with a constant stress of 642 psi.

Given:

KE = 700 lb x 30 ft, Impact area = π x 5 x 5 = 78.5 sq in

Then:

$$\text{Average stress to absorb energy} = \frac{\text{Weight x h1 x 12}}{\text{Area x h2}}$$

Substituting:

$$\text{Average stress} = \frac{700\text{ lb. x 30 ft. x 12 in/ft}}{78.5\text{ sq.in. x 5 in.}} = 642\text{ psi}$$

Unfortunately we do not have access to a perfect cushion. That being the case, we have to figure how to achieve the required average stress. In the above chart the shaded areas under each curve are equal to 642 psi-strain. This value is proportional to the energy which can be absorbed by crushing a given volume of foam to the strain levels shown. From the chart we can see that there is little difference in the maximum stress, about 2,000 psi, between the 15 and 18 lb/cu ft density foam, whereas the 12 lb/cu ft density foam requires a stress of 2850 psi to consume 21,000 ft-lb of kinetic energy. The next step is to calculate maximum g. Simply divide the weight into the peak force generated by the impact.

$$\text{Deceleration} = \frac{2000\text{ psi X 78.5 sq in}}{700\text{ lb X g}} = 224\text{g}$$

We find that the rule of thumb of actual g being about three times theoretical is reasonably close in this instance. If this deceleration is too severe and space permits, the cushion thickness can be increased with a consequent reduction of g.

If the designer is faced with the need of reducing impact forces while maintaining a minimum cushion thickness, it is possible to use lower density foams in conjunction with a load spreader. The chart on the left below depicts the effect of density on dynamic compressive strength over the typical range of polyurethane foams used for impact absorption.

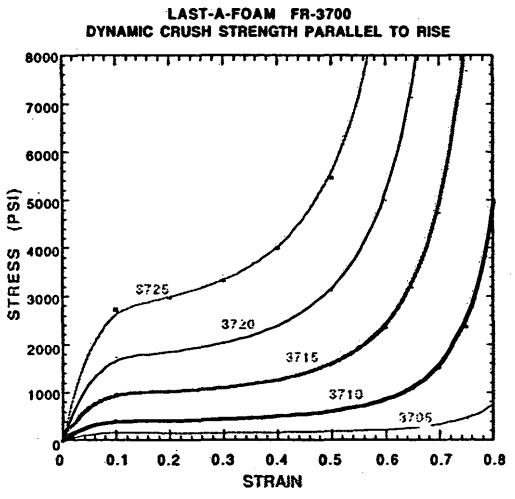

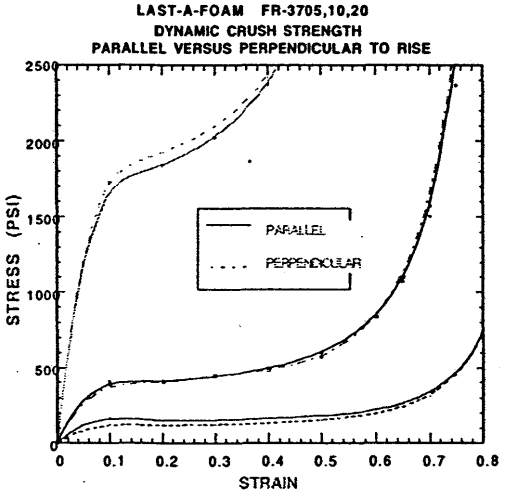

In the chart at right above the difference between compressive strength in the parallel versus perpendicular to rise directions is shown. It can be seen that there is very little difference in strength from foam orientation. The important factor from a design standpoint is that properly formulated and processed polyurethane foams can be counted on to provide uniform protection regardless of the direction of impact. Also, that the risk of "bottoming out" is minimal since the crushed foam continues to function at increasing levels of strain. The upper limit, when the foam is compressed to a solid polymer, does not occur until the effective density is about 75 lb/fcu ft.

With polyurethane foams the package designer is free to fine tune a design simply by varying density to achieve the desired package performance. Furthermore, much of this design work can be accomplished on paper at a considerable saving of time and money. The foam strength values presented herein are based on empirical testing of small (typically 10 to 64 cu in) specimens uniaxially and unrestrained. Actual applications may include a number of factors which the designer must take into account. These factors may include metal deformation, shape effects, combined shear and compression, confined foam compression, and others. Notwithstanding the foregoing, it has been found that compressive (crush) test data developed for LAST-A-FOAM FR-3700 and

presented here (in part) has effectively predicted the impact-absorbing ability of numerous LAST-A-FOAM filled containers.

FIRE PROTECTION

Organic materials withstand fires primarily as an ablative medium. Consequently, the first design consideration is to ensure enough mass to survive the fire. Proper vessel venting is important not only to prevent the possibility of explosive rupture but also to direct the flow of hot gasses to minimize convective heat transfer to the payload. One problem encountered by most organic materials is the possibility of a smoldering fire. When this happens the thermal load on the payload can be very high and of long duration.

As with designing for impact protection, the first step is to define the requirements of the package. To begin with, the maximum allowable payload temperature must be established. Is there a difference between acceptable short- and long-term temperatures? What is the effect of the thermal mass of the payload? Is there radioactive decay heat to dispose of? Once these (and other) questions are answered the designer can address the external thermal threat. Interestingly, the requirements of 10CFR71 (30 minutes at 1,475°F) have often been found to be milder than actual test conditions. Temperatures recorded in pool fire tests typically range from 2,000 to 2,200°F. Furnaces set at 1,475°F prior to the start of testing quickly rise to 2,000+°F if any flammable gasses are generated by the thermal decomposition of the protective medium.

The concept of using a hydrocarbon material as a thermal protective medium may seem counterintuitive. However, test experience has found that some hydrocarbons provide superior performance when compared to materials which do not thermally degrade. In the absence of oxygen, hydrocarbons consume energy as they are being thermally degraded (endothermically). During the thermal exposure the materials ablate, i.e. they are dissipated from the surface by the heat. Away from the heat source the materials can remain quite cool, this is especially true with closed cell polyurethane foams since they are excellent insulators. While the ablation process takes place it is important to vent the breakdown products out of the container. This can cause considerable excitement among observers of qualification tests when they witness flames jetting from the test vessel. At this point the vessel designer can calmly assure the observers that the package is performing as designed. Furthermore, that the venting is good since it shows that heat is being removed from the vessel. The jetting flames are of no consequence since they are no hotter than the surrounding fire. The key to ablative thermal protection is to have a sufficient amount of material so that original material remains after the thermal threat passes. It is also important to prevent thermal paths to the payload, and to prevent smoldering fires inside the container.

The mechanism for smoldering combustion comes from the way in which some organic materials pyrolize. Most materials shrink as they thermally degrade and char. The resultant cracks in the protective material allow the burning surfaces to radiate heat between the opposing faces. If oxygen is drawn into the container and through the crack network, fire can be sustained. These smoldering fires are serious because of their proximity to the payload and because of their long duration. A good working solution is to employ a material which continuously generates an expanding (intumescent), highly

fire resistant char during pyrolysis. An expanding char can fill cracks caused by impact damage and extrude through punctures and vent openings in the outer container wall.

In the author's experience, caution would dictate designs with significant safety margins with respect to thermal resistance. When designing thermal safety margins it is risky to simply focus of the test conditions required under 10CFR71. While it is not possible to test for all contingencies which could occur, the designer can achieve a very high level of confidence by testing packages or components under a variety of failure modes. Tests have been performed on LAST-A-FOAM FR-3700 series rigid polyurethane foams in which hypothetical accident conditions have been simulated in the extreme. These tests show the protection afforded by foams of various densities under a combination of conditions. A diagram of the test configuration is depicted below along with photographs of the results of the 15 minute burn test of FR-3708 (note 6-in rule).

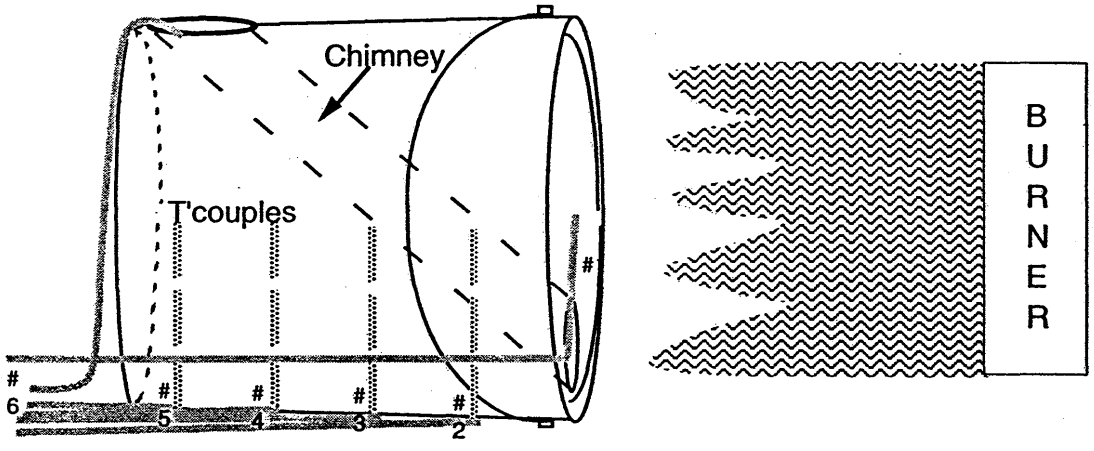

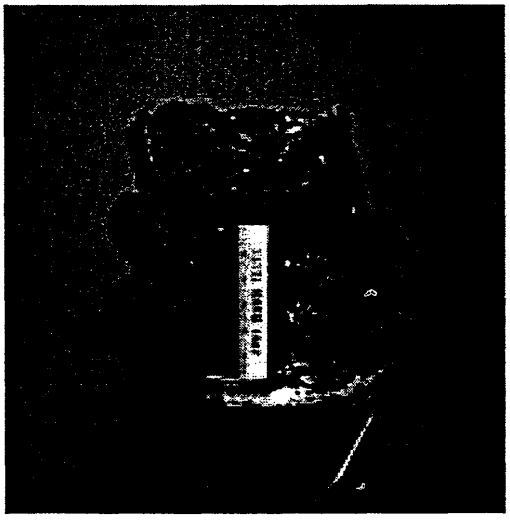

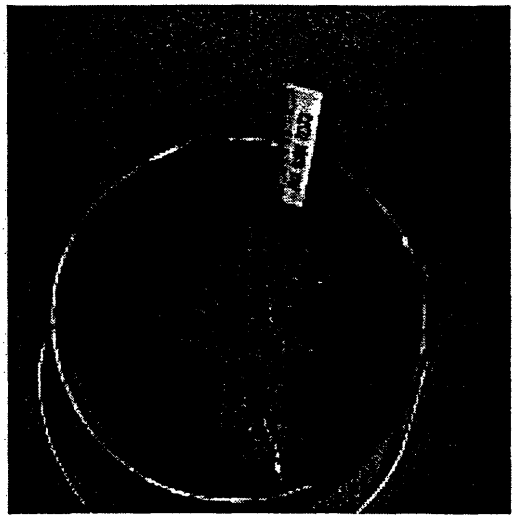

It has been found that the manner in which LAST-A- FOAM FR-3700 chars provides outstanding protection. By building an intumescent char the foam seals cracks and punctures that could occur in an accident and develops a protective cocoon around the payload and virgin foam. A common example of an intumescent char can be found in the "snake" which is generated from the little pellets lighted for children on Independence Day. The table below shows the degree of protection afforded by the intumescent char of LAST-A-FOAM FR-3700 polyurethane foams. Three versions of the test specimen were subjected to 2,000+°F flame temperatures directly impinging on the face of the can (or exposed foam surface) for periods of 15 to 45 minutes. The most severe test incorporated a chimney running from the lower front face to the upper rear of the can. Other test versions had the foam covered with a steel lid or completely exposed to the impinging flame. In all cases the foam developed a char that prevented internal smoldering fires from consuming the foam after the external fire threat passed. Substantial amounts of undegraded foam remained in the test specimen at the end of the test period even in those tests lasting 45 minutes.

Intumescent Char Development Tests: 15-minute burns of 5 gallon pails filled with LAST-A-FOAM FR-3704 and FR-3708 with hot face temperature 1,800°F or greater.

TREATMENT--»	OPEN FACE		LID & CHIMNEY		LID ONLY	
SPECIMEN	% FOAM REMAINING	°F @ 9"	% FOAM REMAINING	°F @ 9"	% FOAM REMAINING	°F @ 9"
FR-3704	53%	79°	55%	256°	72%	73°
FR-3708	72%	72°	75%	169°	83%	72°

Intumescent Char Tests: 45-minute burns of 5 gallon metal cans filled with LAST-A-FOAM FR-3700 with densities of 8, 16, and 24 PCF.

		TEMPERATURE °F AFTER 45 MINUTES				
SPECIMEN	% FOAM REMAINING	TCPL--» H.F.	3"	6"	9"	12
FR-3708	66%	2,340	799	218	78	93
FR-3716	76%	2,248	640	126	76	86
FR-3724	82%	2,049	274	103	94	102

QUALITY ASSURANCE

This paper is not a do-it-yourself guide to foaming. Not all polyurethane foams are the same. In addition to the obvious difference between the flexible and rigid versions, there are many variations. Some variations are obvious to the casual observer, while other differences cannot be detected short of specific physical properties testing. The critical mission of nuclear shipping containers demands that the foaming work be left to those most knowledgeable of the processing and formulation of polyurethane foams. This position may not always fall on receptive ears since there are many foam systems on the market where the manufacturer will be happy to sell the foam to anyone for any purpose. However we believe the designer/user will find that care in the selection of their foam provider will pay large dividends in cost, time, quality assurance including the assurance of passing qualification tests, and, not least, peace of mind.

The fire retardant characteristics of polyurethane foams, including intumescent char, are achieved with special additives. Strength properties are primarily determined by foam density. Even if there is a good understanding of the required chemical composition needed to achieve all the properties necessary for a high-performance package, these properties can be compromised by poor processing techniques.

The package designer/user can obtain the greatest assurance of top quality foam work in his package by focusing on specifications which require strict adherence to physical properties testing. It may also be advisable to specify some process steps such as temperature bounds for in situ foaming, cleanliness and dryness of the cavity to be foamed, inspection hold points during foaming, etc. The least effective method of assuring quality foaming work is to only specify liquid formulations (or, even worse, to provide a recipe). When this happens inexperienced fabricators can be lulled into attempting to foam fill containers with insufficient preparation and poor production practices. There are numerous examples of poor foam specifications resulting in higher costs, schedule delays, and failed qualification tests.

SUMMARY:

Properly formulated rigid polyurethane foams can provide both impact and fire protection in nuclear material transportation containers. Impact protection depends on sufficient crushing distance and foam density to absorb the impact energy. Fire protection is primarily accomplished by the ablative effect of converting the foam to char. In order to preclude the possibility of a smoldering internal fire the foam must be capable of developing an intumescent char.

GENERAL PLASTICS MANUFACTURING CO., P. O. BOX 9097, TACOMA WA 98409 TEL 206-473-5000

LAST-A-FOAM ® FR-3700
DYNAMIC CRUSH STRENGTH
@ 75°F, PARALLEL TO RISE (PSI)

	CRUSH %									
DENSITY	10	20	30	40	50	60	65	70	75	80
3	90	74	73	74	77	85	95	116	143	217
4	129	112	112	116	125	145	168	210	272	438
5	170	153	156	165	183	221	262	335	452	765
6	214	198	205	220	249	312	377	493	688	1219
7	260	247	259	281	325	419	514	686	989	1830
8	308	299	316	348	409	542	674	917	1361	2632
9	358	355	379	420	502	681	859	1188	1816	3667
10	410	413	445	498	603	837	1070	1505	2365	4987
11	547	545	584	649	785	1107	1435	2056	3335	6930
12	644	647	696	779	951	1362	1784	2578	4180	8761
13	749	759	819	922	1137	1652	2188	3189	5173	10938
14	862	881	953	1080	1344	1981	2653	3900	6332	13508
15	984	1013	1099	1253	1574	2353	3184	4724	7679	16524
16	1114	1155	1257	1442	1827	2770	3789	5675	9237	20041
17	1254	1309	1428	1647	2105	3238	4476	6767	11031	24119
18	1402	1473	1613	1869	2410	3760	5253	8017	13089	28823
19	1560	1650	1811	2110	2744	4341	6130	9444	15439	34222
20	1727	1839	2023	2370	3109	4986	7116	11066	18112	40388
21	1905	2040	2251	2650	3505	5701	8222	12904	21144	47398
22	2093	2255	2494	2952	3937	6491	9460	14982	24568	55335
23	2292	2483	2754	3275	4404	7363	10842	17323	28425	64285
24	2501	2726	3031	3623	4911	8323	12381	19954	32753	74337
25	2722	2983	3326	3994	5459	9377	14091	22903	37595	85586
30	4012	4513	5096	6268	8913	16344	25764	43504	71191	163427

6/3/96

GENERAL PLASTICS MANUFACTURING CO., P.O. BOX 9097, TACOMA WA 98409 TEL 206-473-5000

LAST-A-FOAM ® FR-3700
DYNAMIC CRUSH STRENGTH
@ 75°F, PERPENDICULAR TO RISE (PSI)

	CRUSH %									
DENSITY	10	20	30	40	50	60	65	70	75	80
3	54	49	50	55	61	70	80	99	135	216
4	86	81	84	92	103	125	148	189	264	435
5	124	119	125	137	156	197	239	312	448	759
6	167	164	175	191	219	287	354	472	693	1208
7	215	215	232	252	292	395	496	673	1009	1811
8	268	272	296	322	375	522	666	920	1407	2601
9	325	335	368	400	469	668	866	1218	1900	3619
10	387	404	447	486	573	836	1100	1571	2502	4916
11	496	516	554	625	769	1114	1490	2189	3518	7021
12	595	621	668	756	937	1371	1844	2717	4374	8797
13	705	738	795	901	1125	1664	2251	3329	5372	10889
14	825	866	934	1063	1335	1997	2717	4035	6529	13335
15	956	1007	1088	1241	1570	2372	3247	4844	7862	16178
16	1099	1161	1255	1437	1829	2795	3849	5768	9391	19464
17	1254	1329	1438	1652	2116	3268	4529	6820	11139	23240
18	1422	1511	1638	1887	2432	3797	5295	8013	13128	27560
19	1603	1709	1853	2142	2779	4386	6155	9361	15382	32477
20	1797	1922	2087	2419	3159	5040	7119	10880	17929	38049
21	2007	2152	2339	2720	3574	5766	8195	12587	20796	44335
22	2231	2399	2611	3045	4028	6568	9395	14499	24012	51400
23	2472	2665	2904	3397	4521	7454	10729	16634	27608	59309
24	2729	2950	3218	3776	5058	8430	12209	19013	31617	68131
25	3003	3255	3556	4185	5641	9502	13847	21657	36073	77939
30	4666	5122	5630	6727	9354	16600	24891	39662	66382	144476

6/3/96

1.5.2.2 Transfer Cask Neutron Shield Paint

Literature describing the paint used for the transfer cask neutron shield is provided in this section (2 pages).

This page intentionally left blank.

Product Data Sheet

Keeler & Long/PPG
856 Echo Lake Road
Watertown, CT 06795
1-800-238-8596

PPG High Performance Coatings

Epoxy Self Priming Surfacing Enamel KL4500 Series

Product Information

Product Code:	KL4500xxxx Part A where "xxxx" designates color KL4500B Curing Agent Part B for light colors KL4500BN Curing Agent Part B for dark colors
Product:	Epoxy-Polyamine
Suggested Use:	For use as a high build primer/topcoat for properly prepared concrete and steel surfaces subject to radiation, decontamination and loss of coolant accidents in Coating Service Level I areas of nuclear power plants.
Not Recommended:	Areas other than Level I areas. KL3500 series can be utilized in Coating Service Level II and certain level III areas, as well as balance of plant of nuclear power plants.

Product Description

Color:	White and light tints, limited dark colors.
Gloss 60°:	60º Gloss will range from 10 to 90%. Specific gloss depends on application and dry film thickness.
VOC:	0.57 lbs./gal. (68 g/L) (mixed) *
Method:	Calculated
Weight/Gallon:	14.0 ± 0.5 lbs./gal. (mixed) *
In Service Heat Limitations:	250°F (121°C) maximum, dry heat**
Flash Point:	Part A 126°F (52.2°C) Part B 200°F (93.3°C)
Package:	Part A is filled in five gallon pails at 3.05 gallons (11.5 liters) or two gallon containers at 0.76 gallon (2.88 liters). Part B is filled in one gallon containers at 0.95 gallons (3.60 liters) or quart containers at 0.24 gallon (0.909 liters).
Percent Solids by Volume:	92.9 ± 3.0% (mixed) *
Percent Solids by Weight:	95.9 ± 3.0% (mixed) *

Drying Schedule

Air Dry @ 77°F (25°C) ASTM D5895

Dry to Touch:	4 hours
Dry to Handle:	8 hours
Dry to Recoat:	48 hours
	Drying times listed may vary depending on temperature, humidity and air movement.

Application Data

Substrate:	Steel or concrete
Substrate Preparation:	The service life of the coating is directly related to the surface preparation. The surface to be coated must be properly prepared, dry, clean and free of contamination. Steel Non-Immersion: SSPC-SP6 (NACE #3) Commercial Blast Cleaning minimum.
Basecoats:	Epoxy Clear Curing Compound
Application Method:	Air Spray: DeVilbiss MBC gun, 704 or 777 air cap with "E" tip and needle or equivalent equipment. Atomization Pressure: 30-60 psi. Airless Spray: Equipment capable of maintaining a minimum of 4000 psi at the tip without surge. 0.015" (0.381 mm) to 0.031" (0.787 mm) orifice. Brush: Use a high quality natural bristle brush. Roller: Use a 3/8" nap polyester-nylon roller cover with a solvent resistant core. Refer to Application Guide APG-2 for additional information.
Parts Base by Volume:	3.2 parts KL4500
Parts Catalyst by Volume:	1 part KL4500B or KL4500BN
Thinner Code & Percent:	Thin up to 1.75 gallons per 4 gallon mix (43.75%) with KL4093 as needed for application. Do not overthin for specific application. Overthinning will result in reduced film build properties.
Digestion Time:	None required
Pot Life:	2 hours at 77°F (25°C)
Coverage Sq. Ft./Gal. @ 1 mil:	1490 sq. ft./gal. *

The statement and methods presented in this bulletin are based upon the best available data and practices known to PPG/Keeler & Long at the present time. They are not representations or warranties of performance, results or comprehensiveness of such data. Since PPG /Keeler & Long is constantly improving its coatings and paint formulas, future technical data may vary somewhat from what was available when this bulletin was printed. Contact your PPG/Keeler & Long Sales Representative for the most up-to-date information.

Product Data Sheet

Keeler & Long/PPG
856 Echo Lake Road
Watertown, CT 06795
1-800-238-8596

PPG High Performance Coatings

Epoxy Self Priming Surfacing Enamel KL4500 Series

Application Data (continued)

Mixing Instructions:	Mechanically agitate both components thoroughly prior to blending. Add KL4500B (or KL4500BN) Part B to KL4500 Part A. Thoroughly mix using mechanical agitation until uniform.
Wet Film Per Coat:	8.6 to 53.8 mils *
Dry Film Per Coat:	8.0 to 50.0 mils
Clean Up Solvent:	KL4093

Additional Information

Apply only when air, product and surface temperatures are at least 50°F (10°C) and surface temperature is at least 5°F (3°C) above the dew point.

*Values are calculated using KL4500 White Part A mixed with KL4500B White Part B. Values will vary with color.

**KL4500/KL4500B was evaluated and passed the Seven Day Design Basis Accident Test per ANSI N101.2 and ASTM D3911.

Store materials at temperatures between 50°F (10°C) and 85°F (29.4°C).

Permissible substrate temperature during spray application is 50ºF (10ºC) to 120ºF (49ºC) and brush or roller application is 50ºF (10ºC) to 100ºF (37.8ºC).

Read all label and Material Safety Data Sheet (MSDS) information prior to use. MSDS are available by calling 1-800-238-8596.

Not intended for residential use.

Spray equipment must be handled with due care and in accordance with manufacturer's recommendation.

High-pressure injection of coatings into the skin by airless equipment may cause serious injury, requiring immediate medical attention at a hospital.

WARNING! If you scrape, sand, or remove old paint, you may release lead dust or fumes. LEAD IS TOXIC. EXPOSURE TO LEAD DUST OR FUMES CAN CAUSE SERIOUS ILLNESS, SUCH AS BRAIN DAMAGE, ESPECIALLY IN CHILDREN. PREGNANT WOMEN SHOULD ALSO AVOID EXPOSURE. Wear a properly fitted NIOSH-approved respirator and prevent skin contact to control lead exposure. Clean up carefully with a HEPA vacuum and a wet mop. Before you start, find out how to protect yourself and your family by contacting the USEPA National Lead Information Hotline at 1-800-424-LEAD or log on to www.epa.gov/lead. In Canada contact a regional Health Canada office. Follow these instructions to control exposure to other hazardous substances that may be released during surface preparation.

The statement and methods presented in this bulletin are based upon the best available data and practices known to PPG/Keeler & Long at the present time. They are not representations or warranties of performance, results or comprehensiveness of such data. Since PPG /Keeler & Long is constantly improving its coatings and paint formulas, future technical data may vary somewhat from what was available when this bulletin was printed. Contact your PPG/Keeler & Long Sales Representative for the most up-to-date information.

2. PRINCIPAL DESIGN CRITERIA

This chapter defines the design criteria for the FuelSolutions™ Storage System components, including the FuelSolutions™ W150 Storage Cask and W100 Transfer Cask. The safety analyses for the canisters accommodated by the storage cask and transfer cask are provided in the FuelSolutions™ Canister Storage FSAR for each FuelSolutions™ canister design. Accordingly, the design criteria specific to each FuelSolutions™ canister design are provided in Chapter 2 of the respective FuelSolutions™ Canister Storage FSAR.

The storage cask and transfer cask design basis interface parameters used for the design of FuelSolutions™ canisters are provided in this FSAR chapter. The FuelSolutions™ W100 Transfer Cask and W150 Storage Cask design criteria are summarized in Table 2.0-1 and Table 2.0-2, respectively, and described in the sections that follow.

Table 2.0-1 - Transfer Cask Design Criteria Summary (5 Pages)

Type	Criteria	Basis	FSAR Reference
Design Life:			
Design	40 yrs.	-	Section 2.1.2.2
Regulatory	20 yrs.	10CFR72.42(a) & 10CFR72.236(g)	-
Structural:			
Design & Fabrication Codes:			
Structural Steel (Shells and Lids)	ASME Code, Section III, Subsection NF	10CFR72.24(c)(4)	Section 2.1.2.2
Lifting Trunnions	NUREG-0612 & ANSI N14.6	10CFR72.24(c)(4)	Section 2.1.2.2
Lifting Yoke	NUREG-0612 & ANSI N14.6	10CFR72.24(c)(4)	Section 1.1
Design Weights:			
Max. Empty Cask:			
No top cover/neutron shield empty	102,218 lb.	ANSI/ANS 57.9	Table 3.2-2 & Section 2.3.1.5
No top cover/neutron shield filled	106,942 lb.	ANSI/ANS 57.9	Table 3.2-2 & Section 2.3.1.5
Top cover on/neutron shield filled	112,107 lb.	ANSI/ANS 57.9	Table 3.2-3 & Section 2.3.1.5
Max. Canister/Cask on Yoke:			
Neutron shield empty	194,613 lb.	ANSI/ANS 57.9	Table 3.2-2 & Section 2.3.1.5
Neutron shield full	199,337 lb.	ANSI/ANS 57.9	Table 3.2-2 & Section 2.3.1.5
Design Cavity Pressures:			
Cask's Canister Cavity	Hydrostatic	ANSI/ANS 57.9	Sections 2.3.1.4 & 2.3.2.3
Neutron Shield Cavity	45 psig (internal) 15 psig (external)	ANSI/ANS 57.9	Sections 2.3.1.4 & 2.3.2.3
Response and Degradation Limits	See FuelSolutions™ Canister Storage FSARs	10CFR72.122(h)(1)	Section 1.1

Table 2.0-1 - Transfer Cask Design Criteria Summary (5 Pages)

Type	Criteria	Basis	FSAR Reference
Thermal:			
Maximum Design Temperatures:			
Structural Materials	800°F	ASME Code Section II, Part D	Tables 4.3-2
Shielding Materials			
Lead	620°F max.	-	Table 4.3-2
Liquid Neutron Shield	293°F avg.	-	Table 4.3-2
Solid Neutron Shield	350°F max.	Manufacturer Data	Table 4.3-2
Insolation:			
Side	62 BTU/hr-ft^2	10CFR71.71	Table 2.3-2
Ends	31 BTU/hr-ft^2	10CFR71.71	Table 2.3-2
Confinement:	Physical protection of canister	10CFR72.128(a)(3) & 10CFR72.236(d) & (e)	Section 2.1.2.2
Retrievability:			
Normal and Off-normal	No encroachment on canister	10CFR122(f), (h)(l), & (l)	Section 3.7.5.2
After Design-Basis (Postulated) Accident			
Criticality:	Protection of canister and contents	10CFR72.124 & 10CFR.236(c)	Section 6.1 (see FuelSolutions™ Canister Storage FSARs)
Radiation Protection/Shielding:		10CFR72.126 & 10CFR72.128(a)(2)	
Transfer Cask (Normal/Off-normal/Accident)			
Surface	ALARA	10CFR20	Sections 10.1.2 & 10.1.3
Position	ALARA	10CFR20	Sections 10.1.2 & 10.1.3
Exterior of Shielding (Normal/Off-normal/Accident)			
Transfer Mode Position	ALARA	10CFR20	Sections 10.1.2 & 10.1.3
Storage Mode Position	NA	10CFR20	-
ISFSI Controlled Area Boundary	ALARA	10CFR20	Sections 10.1.2 & 10.1.3

Table 2.0-1 - Transfer Cask Design Criteria Summary (5 Pages)

Type	Criteria	Basis	FSAR Reference
Design Bases:			
Spent Fuel Specification	See FuelSolutions™ Canister Storage FSARs	10CFR72.236(a)	Section 2.2
Normal Design Event Conditions:		10CFR72.122(b)(1)	
Ambient Outside Temperatures:			
Minimum	0°F	ANSI/ANS 57.9	Section 2.3.1.1
Maximum	100°F	ANSI/ANS 57.9	Section 2.3.1.1
Lifetime Average	77°F	ANSI/ANS 57.9	Sections 2.3.1.1
Ambient Plant Temperatures:			
Spent Fuel Pool	120°F	ANSI/ANS 57.9	Table 2.3-3
Fuel Building	77°F	ANSI/ANS 57.9	Table 2.3-3
Live Load			
Max. Loaded Canister			
Dry	80,888 lb.	ANSI/ANS 57.9	Table 3.2-3 & Section 2.3.1.6
Wet	91,450 lb.	ANSI/ANS 57.9	Table 3.2-2 & Section 2.3.1.6
Handling Load	15% of dead load	CMAA #70	Section 2.3.1.7
Vibration (horizontal transfer)	±0.6 *g* vertical, ±0.3 *g* longitudinal, ±0.2 *g* lateral	NUREG/CR-0128	Section 2.3.1.7
Handling Load (horizontal canister transfer)	45,000 lb. push or pull, either end	-	Section 2.3.1.7
Wet/Dry Loading	Wet	-	Section 1.1
Transfer Orientation	Vertical or Horizontal	-	Section 1.1
Test Loads:			
Yoke	300% of maximum service load	NUREG-0612 & ANSI N14.6	Section 1.2.1.4.4
Trunnions	300% of maximum service load	NUREG-0612 & ANSI N14.6	Section 2.3.1.8

Table 2.0-1 - Transfer Cask Design Criteria Summary (5 Pages)

Type	Criteria	Basis	FSAR Reference
Off-Normal Design Event Conditions:		10CFR72.122(b)(1)	
Ambient Temperature			
Minimum	-40°F	ANSI/ANS 57.9	Section 2.3.2.1
Maximum	125°F	ANSI/ANS 57.9	Section 2.3.2.1
Maximum Misaligned Canister Horizontal Transfer Load	70,000 lb. push or 50,000 pull, either end	-	Section 2.3.2.4
Design-Basis (Postulated) Accident Design Events and Conditions:		10CFR72.24(d)(2) & 10CFR72.94	
End Drop (in fuel building)	max. capacity	-	Section 2.3.3.2
Side Drop	72 in.	-	Sections 2.3.3.2 & 12.3
Fire			
Duration (min.)	5 minutes	10CFR72.122(c)	Section 2.3.3.4
Temperature (avg. min.)	1,475°F	10CFR72.122(c)	Section 2.3.3.4
Fuel Rod Rupture	See FuelSolutions™ Canister Storage FSARs	-	Section 7.3
Explosive Overpressure	same as tornado	10CFR72.122(c)	Section 2.3.3.8
Design-Basis Natural Phenomenon Design Events and Conditions:		10CFR72.92 & 10CFR72.122(b)(2)	
Flood	NA	ANSI/ANS 57.9	Section 2.3.4.1
Seismic			
Max ZPA Horizontal Ground (simultaneous in two orthogonal directions)	0.25 *g*	10CFR72.102(f) & RG 1.60	Section 2.3.4.4

Table 2.0-1 - Transfer Cask Design Criteria Summary (5 Pages)

Type	Criteria	Basis	FSAR Reference
Max ZPA Vertical Ground	0.25 *g*	10CFR72.102(f) & RG 1.60	Section 2.3.4.4
Spectra	per RG 1.60	10CFR72.102(f)	Section 2.3.4.4.1
Wind	150 mph	ASCE 7	Section 2.3.4.5
Tornado			
Wind			
Max. Wind Speed	360 mph	RG 1.76	Table 2.3-4
Pressure Load	425 psf	ASCE 7	Section 2.3.4.2.2
Missiles			Section 2.3.4.3
Automobile			
Weight	4,000 lb.	NUREG-0800	Table 2.3-5
Velocity	126 mph	NUREG-0800	Table 2.3-5
Area	20 sq. ft.	NUREG-0800	Table 2.3-5
Armor Piercing Shell			
Weight	275 lb.	NUREG-0800	Table 2.3-5
Velocity	126 mph	NUREG-0800	Table 2.3-5
Diameter	8 in.	NUREG-0800	Table 2.3-5
Steel Sphere			
Weight	0.15 lb.	NUREG-0800	Table 2.3-5
Velocity	126 mph	NUREG-0800	Table 2.3-5
Diameter	1 in.	NUREG-0800	Table 2.3-5
Burial Under Debris	NA	-	Section 2.3.4.6
Lightning	Site-specific assessment	NFPA 70 & 78	Section 2.3.4.7
Snow and Ice	Enveloped by other loads	ASCE 7	Section 2.3.4.8
Load Combinations:	See Table 2.3-8	ANSI/ANS-57.9 & NUREG-1536	Section 2.3.5

Table 2.0-2 - Storage Cask Design Criteria Summary (5 Pages)

Type	Criteria	Basis	FSAR Reference
Design Life:			
Design	100 yrs.	-	Section 2.1.2.1
Regulatory	20 yrs.	10CFR72.42(a) & 10CFR72.236(g)	-
Structural:			
Design & Fabrication Codes:			
Concrete			
Design	ACI 349	10CFR72.24(c)(4)	Section 2.1.2.1
Fabrication	ACI 318	10CFR72.24(c)(4)	Section 2.1.2.1 & Table 2.6-1
Structural Steel			
Design	AISC	10CFR72.24(c)(4)	Section 2.1.2.1
Fabrication	AISC/AWS	10CFR72.24(c)(4)	Section 2.1.2.1
Design Weights:			
Max. Loaded Canister (Dry)	80,888 lb.	ANSI/ANS 57.9	Table 3.2-1 & Section 2.3.1.5
Max. Empty Cask:			
Assembled with Top Cover	253,204 lb.	ANSI/ANS 57.9	Table 3.2-1 & Section 2.3.1.5
Max. Canister/Cask	334,092 lb.	ANSI/ANS 57.9	Table 3.2-1 & Section 2.3.1.5
Design Cavity Pressures	NA	-	Sections 2.3.1.4 & 2.3.2.3
Response and Degradation Limits	See FuelSolutions™ Canister Storage FSARs	10CFR72.122(h)(1)	Section 1.1

Table 2.0-2 - Storage Cask Design Criteria Summary (5 Pages)

Type	Criteria	Basis	FSAR Reference
Thermal:			
Maximum Design Temperatures:			
Concrete			
Bulk average (normal)	150°F	ACI 349	Table 4.3-1
Local Maximum (normal)	200°F	ACI 349	Table 4.3-1
Local Maximum (off-normal)	350°F	ACI 349	Table 4.3-1
Structural Materials (Carbon Steel)	700°F	ASME Code Section II, Part D	Table 4.3-1
Structural Materials (Stainless Steel)	800°F	ASME Code Section II, Part D	Table 4.3-1
Insolation:			
Side	62 BTU/hr-ft^2	10CFR71.71	Table 2.3-2
Top	123 BTU/hr-ft^2	10CFR71.71	Table 2.3-2
Confinement:	None	10CFR72.128(a)(3) & 10CFR72.236(d) & (e)	2.1.2.1
Retrievability:			
Normal and Off-normal	No damage which precludes retrieval of canister	10CFR122(f), (h)(1), & (l)	Sections 3.7.3 & 3.7.4
After Design-Basis (Postulated) Accident			
Criticality:	Protection of canisters and contents	10CFR72.124 & 10CFR.236(c)	Section 6.1 (see FuelSolutions™ Canister Storage FSARs)
Radiation Protection/Shielding:		10CFR72.126 & 10CFR72.128(a)(2)	
Storage Cask (Normal/Off-normal/Accident)			
Surface	ALARA	10CFR20	Sections 10.1.2 & 10.1.3
Position	ALARA	10CFR20	Sections 10.1.2 & 10.1.3

Table 2.0-2 - Storage Cask Design Criteria Summary (5 Pages)

Type	Criteria	Basis	FSAR Reference
Exterior of Shielding (Normal/Off-normal/Accident)			
Transfer Mode Position	ALARA	10CFR20	Sections 10.1.2 & 10.1.3
Storage Mode Position	ALARA	10CFR20	Sections 10.1.2 & 10.1.3
Beyond Controlled Area during Normal Operation and Anticipated Occurrences	25 mrem/yr. to whole body 75 mrem/yr. to thyroid 25 mrem/yr. to any organ	10CFR72.104	Section 10.1.2
On Controlled Area Boundary from Design Basis Accident	5 rem TEDE 50 rem DDE+CDE any organ 15 rem DDE=CDE eye lens 50 rem shallow or skin	10CFR72.106	Section 10.1.2
Design Bases:			
Spent Fuel Specification	See FuelSolutions™ Canister Storage FSARs	10CFR72.236(a)	Section 2.2
Normal Design Event Conditions:		10CFR72.122(b)(1)	
Ambient Outside Temperatures:			
Minimum	0°F	ANSI/ANS 57.9	Section 2.3.1.1
Maximum	100°F	ANSI/ANS 57.9	Section 2.3.1.1
Lifetime Average	77°F	ANSI/ANS 57.9	Sections 2.3.1.1
Live Load:		ANSI/ANS 57.9	Section 2.3.1.6
Loaded Transfer Cask (max.)	106,942 lb.	ANSI/ANS 57.9	Table 3.2-2 & Section 2.3.1.5
Dry Loaded Canister (max.)	80,888 lb.	ANSI/ANS 57.9	Table 3.2-2 & Section 2.3.1.6
Handling Load	15% of dead load	CMAA #70	Section 2.3.1.7
Handling Load (horizontal canister transfer)	45,000 lb. push or pull, either end	-	Section 2.3.1.7
Wet/Dry Loading	Dry	-	Section 1.1
Storage Orientation	Vertical	-	Section 1.1

Table 2.0-2 - Storage Cask Design Criteria Summary (5 Pages)

Type	Criteria	Basis	FSAR Reference
Off-Normal Design Event Conditions:		10CFR72.122(b)(1)	
Ambient Temperature			
Minimum	-40°F	ANSI/ANS 57.9	Section 2.3.2.1
Maximum	125°F	ANSI/ANS 57.9	Section 2.3.2.1
Maximum Misaligned Canister Horizontal Transfer Load	70,000 lbs. push or 50,000 lbs. pull, either end	-	Section 2.3.2.4 and Section 12.3
Design-Basis (Postulated) Accident Design Events and Conditions:		10CFR72.94	
Drop Cases:			
End	36 in.	-	Section 2.3.3.2.1
Tip-Over	Assumed on J-skid	-	Section 2.3.3.3
Fire:			
Duration (min.)	5 minutes	-	Section 2.3.3.4
Temperature (avg. min.)	1,475°F	10CFR72.122(c)	Section 2.3.3.4
Fuel Rod Rupture	See FuelSolutions™ Canister Storage FSARs	-	Section 7.3
Explosive Overpressure	Same as tornado	10CFR72.122(c)	Section 2.3.3.8
Air Flow Blockage:			
Vent Blockage	100%	10CFR72.128(a)(4)	Section 2.3.3.1
Ambient Temperature	100°F	10CFR72.128(a)(4)	Section 2.3.3.1
Design-Basis Natural Phenomenon Design Events and Conditions:		10CFR72.92 & 10CFR72.122(b)(2)	
Flood			
Height	50 ft.	10CFR71.73(c)(5)	Section 2.3.4.1
Velocity	21 ft/sec	RG 1.59	Section 2.3.4.1
Seismic			
Max ZPA Horizontal Ground (simultaneous in two orthogonal directions)	0.25 *g*	10CFR72.102(f) & RG 1.60	Section 2.3.4.4

Table 2.0-2 - Storage Cask Design Criteria Summary (5 Pages)

Type	Criteria	Basis	FSAR Reference
Max ZPA Vertical Ground	0.25 *g*	10CFR72.102(f) & RG 1.60	Section 2.3.4.4
Spectra	per RG 1.60	10CFR72.102(f)	Section 2.3.4.4.1
Wind	150 mph	ASCE 7	Section 2.3.4.5
Tornado			
Wind			
Max. Wind Speed	360 mph	RG 1.76	Table 2.3-4
Pressure Load	356 psf	ASCE 7	Section 2.3.4.2.2.1
Missiles			Section 2.3.4.3
Automobile			
Weight	4,000 lb.	NUREG-0800	Table 2.3-5
Velocity	126 mph	NUREG-0800	Table 2.3-5
Area	20 sq. ft.	NUREG-0800	Table 2.3-5
Armor Piercing Shell			
Weight	275 lb.	NUREG-0800	Table 2.3-5
Velocity	126 mph	NUREG-0800	Table 2.3-5
Diameter	8 in.	NUREG-0800	Table 2.3-5
Steel Sphere			
Weight	0.15 lb.	NUREG-0800	Table 2.3-5
Velocity	126 mph	NUREG-0800	Table 2.3-5
Diameter	1 in.	NUREG-0800	Table 2.3-5
Burial Under Debris	Bounded by Air Flow Blockage Criteria	-	Section 2.3.4.6
Lightning	Site-specific assessment	NFPA 70 & 78	Section 2.3.4.7
Snow and Ice Load	101 psf	ASCE 7	Section 2.3.4.8
Load Combinations:	See Table 2.3-6 & Table 2.3-7	ANSI/ANS-57.9 & NUREG 1536	Section 2.3.5

This page intentionally left blank.

2.1 Structures, Systems, and Components Important to Safety

2.1.1 Identification of Quality Items

2.1.1.1 Important to Safety Items

As discussed in Chapter 1 of this FSAR, the FuelSolutions™ W150 Storage Cask and W100 Transfer Cask are structures, systems, and components (SSCs) that are classified as important to safety, in accordance with 10CFR72.[1] The safety analysis for these SSCs is provided in this FSAR. Each FuelSolutions™ canister is an SSC that is also classified as important to safety, as described in the respective FuelSolutions™ Canister Storage FSAR. Table 2.1-1 provides a summary of the FuelSolutions™ Storage System components and support equipment and defines their safety classification.

2.1.1.2 Safety-Related Items

The FuelSolutions™ Storage System support equipment that is defined as safety-related, in accordance with 10CFR50,[2] is identified in Table 2.1-1.

2.1.2 Design Bases and Criteria

2.1.2.1 Storage Cask

General

Consistent with the findings of the NRC Waste Confidence Decision,[3] the FuelSolutions™ W150 Storage Cask is designed for 100 years of service, while satisfying the requirements of 10CFR72. The design considerations that assure storage cask performance throughout the service life include the following:

- Exposure to environmental effects
- Material degradation
- Maintenance and inspection provisions.

The adequacy of the storage cask design for the intended service life is discussed in Section 3.4.4 of this FSAR.

Structural

The FuelSolutions™ W150 Storage Cask includes both reinforced concrete and structural steel components that are classified as important to safety. The reinforced concrete is designed in

---

[1] Title 10, Code of Federal Regulations, Part 72 (10CFR72), *Licensing Requirements for the Independent Storage of Spent Nuclear Fuel and High-Level Radioactive Waste*, 1995.

[2] Title 10, Code of Federal Regulations, Part 50 (10CFR50), *Domestic Licensing of Production and Utilization Facilities*, 1995.

[3] *Nuclear Regulatory Commission 10 CFR Part 51 Waste Confidence Decision Review*, U.S. Nuclear Regulatory Commission, September 11, 1990.

accordance with the applicable requirements of ACI 349,[4] and constructed in accordance with the applicable requirements of ACI 318,[5] as discussed in Section 2.6.1. Steel components of the storage cask are designed and fabricated in accordance with the requirements of AISC.[6] The associated welding is in accordance with AWS.[7] Compliance with these codes is fully consistent with that used by other canister-based dry storage systems previously approved by the NRC.

The FuelSolutions™ W150 Storage Cask is designed for all normal, off-normal, and design basis accident condition loadings, as defined in Section 2.3. These design loadings include a postulated bottom end drop accident from the maximum allowable handling height, consistent with the *technical specification* requirements contained in Section 12.3 of this FSAR. The load combinations for which the storage cask reinforced concrete and structural steel are designed are defined in Section 2.3.5. The physical characteristics of the bounding FuelSolutions™ canister for which the storage cask is designed are defined in Section 2.2 of this FSAR.

The FuelSolutions™ storage cask impact limiter includes a structural steel shell and polyurethane foam that are classified as important to safety. The impact limiter is designed by analysis to provide sufficient crush strength for the postulated storage cask tip-over condition. The steel components of the storage cask impact limiter are fabricated in accordance with the requirements of AISC, and the associated welding is in accordance with AWS. The storage cask impact limiter is designed for normal and accident condition loadings, as defined in Section 2.3. The design loads include normal dead weight and live loads, and a postulated tip-over of the storage cask while secured to the J-skid during upending or downending operations.

Thermal

The allowable temperatures for the FuelSolutions™ W150 Storage Cask reinforced concrete are in accordance with ACI 349, Appendix A, which limits the bulk average concrete temperature to 150ºF, the maximum local concrete temperature to 200ºF for normal conditions, and the maximum concrete surface temperature for off-normal and accident (short-term) conditions to 350ºF. The allowable temperatures for the structural steel components are based on the maximum temperature for which material properties and allowable stresses are provided in Section II[8] of the ASME Code. The specific allowable temperatures for the structural steel components of the storage cask are provided in Chapter 4 of this FSAR.

The storage cask is designed for extreme cold conditions, as discussed in Section 2.3.2. The structural steel materials used for the storage cask that are susceptible to brittle fracture are discussed in Section 3.1.2.1.2.

The storage cask is designed for the maximum allowable heat load for steady-state normal conditions. Since some storage cask off-normal and postulated accident transient conditions could result in temperatures that exceed allowable material temperatures, periodic monitoring of

---

[4] ACI 349-90, *Code Requirements for Nuclear Safety Related Concrete Structures*, American Concrete Institute.

[5] ACI 318-89, *Building Code Requirements for Reinforced Concrete*, American Concrete Institute.

[6] AISC, *Manual of Steel Construction*, American Institute of Steel Construction, Ninth Edition.

[7] AWS D1.1-96, *Structural Welding Code - Steel*, American Welding Society.

[8] American Society of Mechanical Engineers (ASME), Boiler and Pressure Vessel Code, Section II, *Materials*, Part D, "Properties," 1995 Edition.

either the storage cask vent screens or the cask temperature is to be performed by the licensee in accordance with the *technical specification* contained in Section 12.3 of this FSAR. All heat removal is passive for normal conditions of storage. The thermal characteristics of the bounding FuelSolutions™ canister for which the storage cask is designed are defined in Section 2.2 of this FSAR.

Shielding

The off-site dose for normal operating conditions at the site boundary is limited by 10CFR72.104(a) to a maximum of 25 mrem/year whole body, 75 mrem/year thyroid, and 25 mrem/year for other organs, including contributions from all nuclear fuel cycle operations. Since these limits are dependent on plant operations as well as site-specific conditions (e.g., the ISFSI design and proximity to the site boundary, and the number and arrangement of loaded storage casks on the ISFSI pad), the determination and comparison of ISFSI doses to this limit are necessarily site-specific. Dose rates for a typical ISFSI using the FuelSolutions™ Storage System are provided in Section 10.4 of this FSAR. The determination of site-specific ISFSI dose rates at the site boundary and demonstration of compliance with regulatory limits is to be performed by the licensee.

The FuelSolutions™ W150 Storage Cask is designed to limit the calculated storage cask surface dose rate at the cask midplane for all FuelSolutions™ canisters to 50 mrem/hr or less, as defined in Section 2.2 of this FSAR. The storage cask is also designed to maintain occupational exposures ALARA during canister transfer operations, in accordance with 10CFR20.[9] The calculated storage cask dose rates are determined in Section 5.1.1 of this FSAR. These dose rates are used to perform a generic occupational exposure estimate for canister transfer operations and a dose assessment for a typical ISFSI using the FuelSolutions™ Storage System, as described in Sections 10.3 and 10.4 of this FSAR, respectively. In addition, storage cask dose rates are limited in accordance with the *technical specification* provided in Section 12.3 of this FSAR.

Confinement

The FuelSolutions™ W150 Storage Cask does not perform any confinement function. Confinement during storage is provided by the canister, which is addressed in Chapter 7 of each FuelSolutions™ Canister Storage FSAR. The storage cask provides physical protection and biological shielding for the canister confinement boundary during canister transfer and dry storage operations.

Operations

There are no radioactive effluents that result from canister transfer or storage operations with the storage cask. Effluents generated during canister loading and closure operations are handled by the plant's radwaste system and procedures under the licensee's 10CFR50 license.

Generic operating procedures for the FuelSolutions™ Storage System using the FuelSolutions™ W150 Storage Cask are provided in Chapter 8 of this FSAR. The licensee is required to develop detailed operating procedures based on site-specific conditions and requirements that also comply with the applicable 10CFR50 *technical specification* requirements for the site.

[9] Title 10, Code of Federal Regulations, Part 20 (10CFR20), *Standards for Protection Against Radiation*, 1995.

Acceptance Tests and Maintenance

The fabrication acceptance basis and maintenance program to be applied to the FuelSolutions™ W150 Storage Cask and storage cask impact limiter are described in Chapter 9 of this FSAR. The operational controls and limits to be applied to the FuelSolutions™ W150 Storage Cask are contained in Chapter 12 of this FSAR. Application of these requirements will assure that the FuelSolutions™ W150 Storage Cask is fabricated, operated, and maintained in a manner that satisfies the design criteria defined in this chapter.

Decommissioning

Decommissioning considerations for the FuelSolutions™ Storage System, including the FuelSolutions™ W150 Storage Cask, are addressed in Chapter 14 of this FSAR.

2.1.2.2 Transfer Cask

General

The FuelSolutions™ W100 Transfer Cask is designed for 40 years of service, while satisfying the requirements of 10CFR72. The design considerations that assure transfer cask performance throughout the service life include addressing the following:

- Exposure to environmental effects
- Structural fatigue effects
- Material degradation
- Maintenance and inspection provisions.

The adequacy of the transfer cask design for the intended service life is discussed in Section 3.4.4 of this FSAR.

Structural

The FuelSolutions™ W100 Transfer Cask includes both structural steel and non-structural biological shielding components that are classified as important to safety. The structural steel components of the transfer cask, with the exception of the lifting trunnions, are designed and fabricated in accordance with the applicable requirements of Section III, Subsection NF,[10] of the ASME Code, as discussed in Section 2.6.2. The lifting trunnions and associated attachment welds are designed in accordance with the requirements of NUREG-0612[11] and ANSI N14.6[12] for non-redundant lifting devices. The properties for the lead gamma shielding at temperature are determined in accordance with NUREG/CR-0481.[13]

---

[10] American Society of Mechanical Engineers (ASME), Boiler and Pressure Vessel Code, Section III, Division 1, Subsection NF, *Component Supports*, 1995 Edition.

[11] NUREG-0612, *Control of Heavy Loads in Nuclear Power Plants*, U.S. Nuclear Regulatory Commission, July 1980.

[12] ANSI N14.6, *Special Lifting Devices for Shipping Containers Weighing 10,000 Pounds (4,500 kg) or More*, American National Standards Institute, 1993.

[13] NUREG/CR-0481, *An Assessment of Stress-Strain Data Suitable for Finite-Element Elastic-Plastic Analysis of Shipping Containers*, Sandia National Laboratories, September 1978.

The FuelSolutions™ W100 Transfer Cask is designed for all normal, off-normal, and design basis accident condition loadings, as defined in Section 2.3. These design loadings include a postulated drop accident from the maximum allowable handling height, consistent with the *technical specification* contained in Section 12.3 of this FSAR. The load combinations for which the transfer cask is designed are defined in Section 2.3.5. The physical characteristics of the bounding FuelSolutions™ canister for which the transfer cask is designed are defined in Section 2.2 of this FSAR.

Thermal

The allowable temperatures for the FuelSolutions™ W100 Transfer Cask structural steel components are based on the maximum temperature for which material properties and allowable stress values are provided in Section II of the ASME Code. The maximum allowable temperature for the lead gamma shielding is based on its melting point.[14] The transfer cask cover plates incorporate solid neutron shielding material. This material has a maximum allowable temperature in accordance with the manufacturer's test data.[15, 16] The specific allowable temperatures for the structural steel and shielding components of the transfer cask are provided in Chapter 4 of this FSAR. The transfer cask is designed for extreme cold conditions, as discussed in Section 2.3.2. The fracture critical structural steel materials used for the transfer cask are not susceptible to brittle fracture, as discussed in Section 3.1.2.2.2.

The transfer cask liquid neutron shield maximum allowable temperature is a function of the internal pressure. To preclude overpressurization of the neutron shield shell due to boiling of the neutron shield liquid, the maximum temperature of the liquid is limited to less than the saturation temperature at the shell design pressure. In addition, the liquid neutron shield is precluded from freezing during extreme cold conditions by limiting the minimum allowable temperature. The corresponding *technical specification* applicable to the transfer cask during cold conditions is contained in Section 12.3 of this FSAR. The thermal characteristics of the bounding FuelSolutions™ canister for which the transfer cask is designed are defined in Section 2.2 of this FSAR.

Shielding

The FuelSolutions™ W100 Transfer Cask provides shielding to maintain occupational exposures ALARA in accordance with 10CRF20, while also maintaining the maximum load on the plant's crane hook to 100 tons or less. The transfer cask calculated dose rates are reported in Section 5.1 of this FSAR. These dose rates are used to perform a generic occupational exposure estimate for canister loading, closure, and transfer operations, as described in Section 10.3 of this FSAR. A postulated transfer cask accident condition, which includes the loss of the liquid neutron shield, is also evaluated in Section 5.4.2 of this FSAR. In addition, transfer cask dose rates are controlled in accordance with plant-specific procedures and ALARA requirements (discussed in Section 10.1.3 of this FSAR).

---

[14] Avallone, E.A., and Baumeister III, T., *Mark's Standard Handbook for Mechanical Engineers*, 9th Edition, McGraw-Hill Book Company, NY, 1987.

[15] GESC NS-3, *Technical Report NS-3-001, Thermal Conductivity, Thermal Resistance, and Coefficient of Thermal Expansion of Bisco NS-3*, Revision 1, NAC International, January 1996.

[16] Bulletin S-73N, *Catalog No. 277 Shielding Technical Data*, Reactor Experiments, Inc., August 1991.

The transfer cask provides a means to isolate the annular area between the canister outer surface and the cask inner surface to minimize the potential for surface contamination of the canister by spent fuel pool water during wet loading operations. Transfer cask surfaces expected to require decontamination are polished smooth. Those surfaces that are routinely wetted by the spent fuel pool water during in-pool operations are fabricated from stainless steel. The maximum permissible surface contamination for the transfer cask is in accordance with plant-specific procedures and ALARA requirements (discussed in Section 10.1.3 of this FSAR).

Confinement

The FuelSolutions™ W100 Transfer Cask does not perform any confinement function. Confinement during canister transfer operations is provided by the canister, which is addressed in Chapter 7 of each FuelSolutions™ Canister Storage FSAR. The transfer cask provides physical protection and biological shielding for the canister confinement boundary during canister closure and canister transfer operations.

Operation

There are no radioactive effluents that result from canister transfer operations with the transfer cask. Effluents generated during canister loading and closure operations are handled by the plant's radwaste system and procedures.

Generic operating procedures for the FuelSolutions™ Storage System using the FuelSolutions™ W100 Transfer Cask are provided in Chapter 8 of this FSAR. The licensee will develop detailed operating procedures based on plant-specific requirements and in accordance with site *technical specification* requirements.

Acceptance Tests and Maintenance

The fabrication acceptance basis and maintenance program to be applied to the FuelSolutions™ W100 Transfer Cask are described in Chapter 9 of this FSAR. The operational controls and limits to be applied to the FuelSolutions™ W100 Transfer Cask are contained in Chapter 12 of this FSAR. Application of these requirements will assure that the FuelSolutions™ W100 Transfer Cask is fabricated, operated, and maintained in a manner that satisfies the design criteria defined in this chapter.

Decommissioning

Decommissioning considerations for the FuelSolutions™ Storage System, including the FuelSolutions™ W100 Transfer Cask, are addressed in Chapter 14 of this FSAR.

Table 2.1-1 - Quality Classifications of the FuelSolutions™ Storage System Components and Support Equipment

FuelSolutions™ Storage System Component	Quality Classification
Storage Cask	Important to Safety
Transfer Cask	Important to Safety
Canister	Important to Safety
Fuel Assembly Spacer	Important to Safety
Canister Closure/Opening Equipment:	
• Annulus Seal	NITS
• Shield Plug Retainers	NITS
• Vacuum Drying System	NITS
• Inner Closure Plate Strongback	NITS
• Automated Welding/Opening System	NITS
• Helium Leak Detector	NITS
Equipment for Horizontal Canister Transfer:	
• Horizontal Transfer Trailer	NITS
• Horizontal Transfer Skid	NITS
• Hydraulic Ram System	NITS
• Upender/Downender	NITS
• Storage Cask Impact Limiter	Important to Safety
• Horizontal Lid Handling Fixture	NITS
Equipment for Vertical Canister Transfer:	
• Vertical Transporter	NITS
• Vertical Transport Trailer	NITS
• Air Pallet System	NITS
• Vertical Canister Lift Fixture	Safety Related
Common Equipment for Horizontal and Vertical Canister Transfer:	
• Cask Lifting Yoke	Safety Related
• Cask Cavity Axial Spacer	Important to Safety
• Docking Collar	Important to Safety
• Cask Restraints	Important to Safety
• Empty Canister Lift Fixture	Safety Related
• Standard Lifting Slings (inside plant facility)	Safety Related
• Standard Lifting Slings (inside ISFSI)	NITS

Notes:

NITS = Not Important to Safety

This page intentionally left blank.

2.2 Spent Fuel to be Stored

The FuelSolutions™ SFMS is designed to dimensionally accommodate all domestic commercial light water reactor (LWR) SNF assembly classes, with the following exceptions:

- South Texas
- Indian Point 1
- Haddam Neck
- LaCrosse
- San Onofre 1
- CE 16x16 (with control components)
- CE 16x16 System 80 (with control components)

The many classes of existing SNF assemblies have a broad range of physical and nuclear characteristics (i.e., length, width, number of fuel rods, initial enrichment, burnup, etc.) and include PWR SNF assemblies and BWR SNF assemblies. The SNF assembly classes and characteristics, including enrichment, burnup, and cooling time, that are accommodated by each FuelSolutions™ canister are identified in the respective FuelSolutions™ Canister Storage FSAR.

The base design of the FuelSolutions™ Storage System components is for intact zircaloy-clad fuel with no known or suspected cladding defects greater than hairline cracks or pinhole leaks. Some FuelSolutions™ canisters may also be designed to accommodate damaged fuel, stainless clad fuel, MOX fuel, and consolidated fuel. Additional FSAR documents (amendments) will be provided at a later date to address the design features, such as canning, necessary to address the design requirements for these alternate contents.

The FuelSolutions™ W150 Storage Cask and W100 Transfer Cask designs are based on the bounding FuelSolutions™ canister dimensions and payload weights, and the bounding thermal and radiological source terms that form the basis for the structural, thermal, and shielding safety analyses documented in this FSAR. These include the following canister interface parameter values:

- The storage cask and transfer cask can physically accommodate any FuelSolutions™ canister with an outside diameter of 66 inches, a short canister length of 182 inches, a long canister length of 192 inches, and a maximum dry loaded weight of 81,129 pounds or less.
- The storage cask and transfer cask can accommodate any FuelSolutions™ canister with a total heat load (Q_{max}) of 28.0 kW or less and a maximum linear heat generation rate ($LHGR_{max}$) of 0.253 kW/in or less.
- The storage cask is designed to maintain the through-wall contact surface dose rate to 50 mrem/hr or less, while the transfer cask is designed to maintain doses ALARA, in accordance with site-specific operating procedures and the licensee's ALARA program. The storage cask can accommodate any FuelSolutions™ canister and payload that does not exceed the rated radiological dose rate value.

The basis for these bounding FuelSolutions™ canister interface parameters and the corresponding design basis analysis of the FuelSolutions™ W150 Storage Cask and W100 Transfer Cask are provided in Chapters 3, 4, and 5 of this FSAR.

The qualification of SNF assemblies to be dry stored consistent with the design basis analysis of the FuelSolutions™ W150 Storage Cask and W100 Transfer Cask is provided in each FuelSolutions™ Canister Storage FSAR. Criticality safety is conservatively based on fresh (i.e., unburned) fuel assumptions with optimum moderation and the use of fixed neutron absorbers incorporated into each FuelSolutions™ canister basket design, as described in the respective FuelSolutions™ Canister Storage FSAR.

2.3 Design Loadings

The storage cask is designed to provide safe dry storage of SNF assemblies contained in a FuelSolutions™ canister at an ISFSI or CISF located anywhere in the contiguous United States for 100 years. The storage cask and transfer cask serve to provide physical and radiological protection for a FuelSolutions™ canister during storage and transfer under all design basis normal, off-normal, and accident conditions.

In accordance with 10CFR72, a range of long- and short-term natural ambient conditions are considered in the thermal evaluation of the storage cask and transfer cask. These ambient conditions are assumed to occur concurrently with the design basis normal, off-normal, postulated accident (e.g., blocked vents, loss of neutron shield, etc.), and natural phenomena events, and form the basis for the design basis conditions for the storage cask and transfer cask.

The design basis off-normal, postulated accident, and natural phenomena events are defined in Sections 2.3.2, 2.3.3, and 2.3.4 respectively. Consistent with the definitions in ANSI/ANS-57.9,[17] off-normal events are defined as those that are anticipated to occur with moderate frequency or on the order of once per calendar year. Accident events are defined as those that might occur only once during the service life of the component.

The design basis conditions considered for the storage cask and transfer cask are as follows:

Normal Conditions

- Normal Ambient Conditions for the ISFSI
- Ambient Conditions for the Fuel Building
- Fuel Rod Rupture
- Pressure
- Dead Load
- Live Load
- Handling Loads
- Testing Loads

Off-Normal Conditions

- Extreme Ambient Conditions
- Fuel Rod Rupture
- Internal Pressure
- Misaligned Cask for Horizontal Transfer

[17] ANSI/ANS 57.9, *Design Criteria for an Independent Spent Fuel Storage Installation (Dry Storage Type)*, American National Standards Institute, 1984.

- Blockage of Storage Cask Air Inlet Vents
- Hydraulic Ram Failure During Horizontal Transfer

Accident Conditions

- Accident Thermal Conditions
  - Storage Cask Vent Blockage
  - Transfer Cask Loss of Neutron Shield
- Cask Drop
- Tip-over of Storage Cask on J-skid
- Fire
- Fuel Rod Rupture
- Internal Pressure
- Leakage of the Confinement Boundary
- Explosive Overpressure

Natural Phenomena

- Flooding
- Tornado
- Earthquake
- Wind
- Burial Under Debris
- Lightning
- Snow and Ice
- Volcanism

The storage cask is designed for the most severe environmental conditions and natural phenomena postulated to occur for the entire service life of the cask. The normal environmental conditions include the annual variation of ambient temperature, solar radiation (insolation), wind, snow, and ice conditions. The off-normal environmental conditions include extreme ambient temperatures and insolation. The accident environmental conditions and natural phenomena include wind resulting from a tornado, impact of a missile generated by tornado, flood, earthquake, fire, and explosion. Totally blocked storage cask inlet and/or outlet vents are also postulated as a non-mechanistic accident condition.

The transfer cask is designed for the enveloping environmental conditions and natural phenomena postulated to occur during service. The normal environmental conditions include the annual variation of ambient temperature, insolation, and wind. The off-normal environmental conditions include extreme ambient temperatures and insolation. The accident environmental conditions and natural phenomena include wind resulting from a tornado, impact of a missile

generated by tornado, flood, earthquake, and fire. The loss of the liquid neutron shielding is also postulated as an accident condition.

The effects of the normal, off-normal, and accident condition design loadings defined in this section on a FuelSolutions™ canister are evaluated in the corresponding FuelSolutions™ Canister Storage FSAR.

2.3.1 Normal Conditions

2.3.1.1 Normal Ambient Conditions for the ISFSI

A normal, long-term annual average design temperature of 77°F is selected as bounding for all locations in the contiguous United States. Table 2.3-1 lists the maximum annual average temperatures at domestic reactor sites. The maximum observed historical annual average temperature is 75.23°F at the location of the Turkey Point plant in southern Florida. Thus, use of an annual average ambient temperature of 77°F envelopes all locations within the contiguous United States. Confirmation of the site-specific annual average ambient temperature is to be performed by the licensee.

The design basis annual average ambient temperature is used to evaluate the long-term effects of temperature on the storage cask concrete and fuel assembly cladding. Variations in the normal condition ambient temperature in the range of 0°F to 100°F are also considered in the design of the storage cask and transfer cask. The 0°F and 100°F cases are included as normal condition loadings for the structural evaluation of the FuelSolutions™ canisters, storage cask, and transfer cask.

The storage cask and transfer cask are also subjected to insolation. The resulting insolation values used for storage are based on the insolation values specified for transportation in 10CFR71.71(c)(1),[18] averaged over a 24-hour day. The insolation values used for the normal condition thermal evaluation of the storage cask and transfer cask are provided in Table 2.3-2.

The storage cask and transfer cask, containing canisters loaded with SNF assemblies, are analyzed for the design basis decay heat and the normal ambient conditions described above. The effects of temperature gradients that result in the storage cask and transfer cask are considered. The resulting temperature distribution in the storage cask and transfer cask for normal conditions are provided in Section 4.4 of this FSAR. The structural effects of the temperature distribution is addressed in Sections 3.5.3.1.2 and 3.5.3.3.3 of this FSAR.

The storage cask concrete temperatures, including the bulk average temperature and the maximum temperature, are compared to the corresponding allowable temperatures specified by ACI-349, as discussed in Section 2.1.2.1. Since the ACI-349 allowable temperatures are not exceeded, no additional concrete aggregate material restrictions to control the thermal expansion coefficient are necessary. The transfer cask temperatures, including the stainless steel components and shielding materials, are maintained below the corresponding maximum allowable temperature, as discussed in Section 2.1.2.2. The fuel assembly cladding temperatures

[18] Title 10, U.S. Code of Federal Regulations Part 71 (10CFR71), *Packaging and Transportation of Radioactive Materials*, 1996.

are reported and compared to the allowable temperature applicable to long-term dry storage in Section 4.3 of each FuelSolutions™ Canister Storage FSAR.

2.3.1.2 Ambient Conditions for the Fuel Building

In addition to the normal ambient conditions described in Section 2.3.1.1, the transfer cask and canister are subject to ambient conditions in the plant's fuel building during canister fuel loading and closure operations. The ambient conditions used to evaluate the transfer cask and canister in the plant's fuel building are provided in Table 2.3-3. The resulting transfer cask temperatures for these conditions are provided in Section 4.4 and the corresponding structural effects are discussed in Section 3.2.3 of this FSAR. The fuel cladding temperatures for these conditions are compared to the allowable temperature applicable to short-term conditions in Section 4.3 of each FuelSolutions™ Canister Storage FSAR.

2.3.1.3 Fuel Rod Rupture

The FuelSolutions™ canisters provide the confinement boundary and are designed for internal pressure loads due to fuel rod rupture. Each FuelSolutions™ Canister Storage FSAR discusses the pressure loads used for the specific canister design.

2.3.1.4 Pressure

The transfer cask is subject to hydrostatic pressure during canister fuel loading operations in the spent fuel pool. For this condition, the transfer cask neutron shield may be empty and is designed for a uniform external pressure of 15 psig. Following removal from the spent fuel pool, the transfer cask neutron shield may be filled with water, if not already filled. For this condition, the transfer cask neutron shield is designed for an internal pressure of 45 psig corresponding to the neutron shield temperature and pressure associated with the design basis heat load and the off-normal ambient conditions described in Section 2.3.2.1. In all other conditions, the transfer cask and storage cask are atmospheric vessels and are not subject to internal pressure loads.

2.3.1.5 Dead Load

This load includes the dead weight of the materials of construction for the storage cask and transfer cask. This load acts on the loaded storage cask and transfer cask with these components oriented either vertically or horizontally. The resulting loads and stresses in the storage cask and transfer cask are reported in Sections 3.5.3.1.2 and 3.5.3.3.1, respectively, of this FSAR.

2.3.1.6 Live Load

Live loads include all loads other than dead loads and other design loadings not related to normal system operations defined herein, generally the weight of the canister and contents. The bounding weight for the maximum loaded canister is provided in Tables 3.2-2 and 3.2-3. For vertical canister transfer, the live load on a storage cask is defined as 15% of the maximum weight of the transfer cask and the loaded canister, acting through the docking collar to the attachment points on the upper end of the storage cask, as described in Section 1.2.1.4.4. For horizontal canister transfer, the storage cask impact limiter is subjected to live loads which include the weight of the storage cask with a canister on the J-skid, increased by 15%. Loads due to snow and ice are considered live loads and are described in Section 2.3.4.8. The structural

analysis of the storage cask for live loads is provided in Section 3.5.3.1.2 of this FSAR. The analysis of the storage cask impact limiter for live loads is provided in Section 3.5 of this FSAR.

2.3.1.7 Handling Loads

For normal conditions, this loading includes the loads associated with handling of the loaded storage cask and transfer cask in the vertical or horizontal orientations. This loading also includes the normal handling loads associated with vertical or horizontal transfer of a FuelSolutions™ canister from or to a transfer cask, and to or from a FuelSolutions™ W150 Storage Cask or a transportation cask. These loads are defined as 15% of the component dead loads[19] defined in Section 2.3.1.5, unless noted otherwise.

For vertical handling of a loaded storage cask by lifting or jacking, the handling load is defined as 15% of the maximum weight of the storage cask and the loaded canister. This lifting load acts on the storage cask tie rods used for lifting and handling the storage cask, with the cask in the vertical orientation, as described in Section 1.2.1.4.3. The jacking load acts on the storage cask bottom end at jack locations, as described in Section 1.2.1.4.3. For handling of the storage cask with the cask supported by the upender/downender J-skid (described in Section 1.2.1.4.2), this load is defined as 15% of the maximum weight of the storage cask and the loaded canister. These handling loads are applied to the storage cask in any orientation from vertical to horizontal.

For vertical handling of a loaded transfer cask with the cask in the vertical orientation, this load is defined as 15% of the maximum weight of the transfer cask and the loaded canister, which is acting on the upper trunnions of the transfer cask. In addition, for vertical canister transfer, the handling load on a transfer cask is defined as 15% of the maximum loaded canister weight, acting from the outer closure plate of the canister through the vertical lift fixture on the upper flange of the transfer cask, as described in Section 1.2.1.4.3. For horizontal handling of the loaded transfer cask, the cask is supported at the upper and lower trunnion locations in the horizontal orientation by the transfer skid, as described in Section 1.2.1.4.2. The vibration loading normally incident to on-site transport is conservatively defined in accordance with NUREG/CR-0128[20] as ±0.6 *g* acting in the vertical direction, ±0.3 *g* acting in the longitudinal direction, and ±0.2 *g* acting in the lateral direction, simultaneously. For purposes of the transfer cask analysis, the most significant effects of the handling loads are on the trunnions. For this reason, an on-site transport handling load definition which results in more conservative trunnion loading is used for the transfer cask, based on ANSI N14.23, [21] of ±2.0 *g* acting in the vertical direction, and ±0.1 *g* acting in both the lateral and longitudinal directions, simultaneously.

The transfer cask top cover is lifted from four attachment points on the top surface for placement in the transfer cask inside the plant's fuel building. The lifting slings and attachments that thread into the transfer cask top cover are designed in accordance with the requirements of ANSI N14.6. For horizontal canister transfer between a transfer cask and storage cask, or a

---

[19] CMAA #70, *Specifications for Electric Overhead Traveling Cranes*, Crane Manufacturers Association of America (CMAA), 1988.

[20] NUREG/CR-0128, *Shock and Vibration Environments for a Large Shipping Container During Truck Transport*, U.S. Nuclear Regulatory Commission, May 1978.

[21] ANSI N14.23, *Design Basis for Resistance of Shock and Vibration of Radioactive Material Packages Greater Than One Ton in Truck Transport*, American National Standards Institute, 1980.

transfer cask and transportation cask, friction forces between the support rails sliding surfaces and the canister shell. These can be estimated using a bounding canister weight and coefficient of friction. Per Marks,[22] the static coefficient of friction of grease-free steel on steel in air is 0.39, with lower values for the sliding coefficient. Using a bounding canister load of 85,000 pounds, this results in a friction force of 33,150 pounds. The handling load is conservatively defined as a pushing or pulling axial force of 45,000 pounds, which is acting on the top or bottom end outer closure plate of the canister due to friction forces that developed between the canister shell and cask rails. These reaction loads are applied to the internal rails of the storage and transfer casks (described in Sections 1.2.1.1 and 1.2.1.2) and the transportation cask, and to the cask restraint attachment points described in Section 1.2.1.4.4.

The structural effects of normal condition handling loads on the storage cask and transfer cask are evaluated in Sections 3.5.3.1.2 and 3.5.3.3.2 of this FSAR. The effects of these loads on the transportation cask are addressed in a separate transportation license application.

2.3.1.8 Testing Loads

The transfer cask upper trunnions are used for lifting the empty or loaded transfer cask using the cask lifting yoke and the plant's cask handling crane. At some facilities, the upper trunnions may be considered as special lifting devices for the purpose of meeting the plant's heavy loads criteria in accordance with NUREG-0612. Therefore, the transfer cask upper trunnions are designed and load tested in accordance with the requirements of ANSI N14.6. Since there are only two upper trunnions, the failure of a single trunnion will result in the drop of the cask. Therefore, the trunnions are designed with factors of six and ten on yield and ultimate, respectively, and load tested at three times the maximum service load, as defined in ANSI N14.6. The upper trunnion load test shall not result in permanent deformation of the trunnions, trunnion-to-shell attachment welds, or the transfer cask shells.

2.3.2 Off-Normal Conditions

2.3.2.1 Extreme Ambient Conditions

Extreme variations in the ambient temperature in the range of -40°F to 125°F are conservatively assumed to occur during off-normal conditions for the design of storage cask and transfer cask. The storage cask and transfer cask are also subjected to extreme insolation during off-normal conditions. The resulting insolation values used for this condition are identified in Table 2.3-2. The -40°F and 125°F ambient temperature cases are included as off-normal condition loadings for the structural evaluation of the FuelSolutions™ canisters, storage cask, and transfer cask.

The storage cask and transfer cask, containing canisters loaded with SNF assemblies, are analyzed for the design basis heat load concurrent with the off-normal ambient conditions described above. The resulting storage cask concrete temperatures during dry storage are compared to the allowable temperatures for short-term (off-normal) conditions. Similarly, the resulting transfer cask temperatures during canister transfer are compared to the appropriate allowable temperatures. The temperature distribution in the storage cask and transfer cask for

[22] Avallone, E.A. and Baumeister III, T., *Marks' Standard Handbook for Mechanical Engineers*, 9th Edition, McGraw-Hill Book Company, New York 1987.

off-normal conditions and comparisons to allowable values are provided in Section 4.5 of this FSAR. The structural effects of off-normal condition temperatures on the storage cask and transfer cask are evaluated in Section 3.6.1 of this FSAR. Fuel cladding temperatures for off-normal conditions are evaluated in Section 4.5 of each FuelSolutions™ Canister Storage FSAR, and are limited to the allowable short-term cladding temperature presented in Table 4.3-1 of each FuelSolutions™ Canister Storage FSAR.

2.3.2.2 Fuel Rod Rupture

The FuelSolutions™ canisters provide the confinement boundary and are designed for internal pressure loads due to fuel rod rupture. Each FuelSolutions™ Canister Storage FSAR discusses the pressure loads used for the specific canister design.

2.3.2.3 Internal Pressure

The transfer cask and storage cask are not subject to internal pressure loads. The transfer cask neutron shield is designed for an off-normal condition internal pressure of 45 psig corresponding to the neutron shield temperature and pressure associated with the off-normal ambient conditions described in Section 2.3.2.1.

2.3.2.4 Misaligned Cask for Horizontal Transfer

This off-normal loading condition is postulated to occur as a result of a misalignment of a transfer cask with either a storage cask or transportation cask during horizontal canister transfer. Misalignment loads are treated as a handling load, as discussed in Section 2.3.1.7. The load is limited to 70,000 pounds pushing or 50,000 pounds pulling, in accordance with the *technical specification* requirements contained in Section 12.3 of this FSAR.

The loading is defined as an axial force acting on the outer closure plate of either end of the canister, which is reacted by the transfer cask and the storage cask, or by the transfer cask and transportation cask. These reaction loads are applied to the internal rails of the storage cask and transfer cask (described in Sections 1.2.1.1 and 1.2.1.2) and the transportation cask, and to the cask restraint attachment points described in Section 1.2.1.4.4. The resulting loads and stresses in the storage cask and transfer cask are reported in Section 3.6.3 of this FSAR.

The effects on the transportation cask are documented in a separate transportation license application.

2.3.2.5 Blockage of Storage Cask Air Inlet Vents

This off-normal loading condition may occur as the result of snow, wind-blown debris, or other conditions that would lead to partial or complete blockage of the inlet vents. While partial blocking of an inlet vent is more likely to occur than complete blockage of all inlet vents, which is more likely to occur than complete blockage of all inlet and outlet vents, the condition of all vents blocked is a bounding condition. Therefore, the condition of inlet air vent blockage need not be explicitly considered. The condition of all vents blocked is considered in Section 2.3.3.1.1.

2.3.2.6 Hydraulic Ram Failure During Horizontal Transfer

During horizontal transfer of the canister between the storage cask and transfer cask, the transfer cask and transportation cask, or the storage cask and transportation cask, a hydraulic ram is used to slide the canister between casks by pushing or pulling the canister. Under normal conditions, the hydraulic ram operates normally and successfully performs its function. However, it is postulated that a mechanical failure of the hydraulic ram may occur during the canister transfer operation with the canister transfer only partially completed.

2.3.3 Accident Conditions

2.3.3.1 Accident Thermal Conditions

2.3.3.1.1 Storage Cask Vent Blockage

Postulated accident conditions for the storage cask include the maximum normal ambient temperature of 100°F with all storage cask vents completely blocked, providing no ventilation air flow for the enclosed canister and SNF assemblies. The effects of insolation, as defined in Table 2.3-2, are included. This case bounds the effects of all vents blocked with an ambient temperature of 0ºF without insolation, since the surface concrete temperature reaches its short-term allowable temperature sooner, and a larger thermal gradient is created. The resulting storage cask concrete temperatures for this postulated accident condition are compared to the allowable temperatures for short-term (off-normal) conditions. Fuel cladding temperatures for accident conditions are evaluated in Section 4.6 of each FuelSolutions™ Canister Storage FSAR, and are less than the allowable short-term cladding temperature presented in Table 4.3-1 of each FuelSolutions™ Canister Storage FSAR.

The storage cask containing a canister loaded with SNF assemblies is analyzed for the design basis heat load concurrent with the postulated accident conditions described above. The resulting temperature distribution in the storage cask for this postulated accident case and comparisons with allowable values are provided in Section 4.6 of this FSAR. The corresponding structural effects of these accident condition temperatures on the storage cask are evaluated in Section 3.7.1 of this FSAR.

2.3.3.1.2 Transfer Cask Loss of Neutron Shield

Postulated accident conditions for the transfer cask include the maximum normal ambient temperature of 100ºF, with a loss of liquid neutron shielding material. The effects of insolation, as defined in Table 2.3-2, are included. As with the storage cask, this case bounds the ambient temperature of 0ºF without insolation, since the material temperatures are closer to their respective allowable values and a larger thermal gradient is created. The resulting transfer cask material temperatures are compared to the corresponding allowable temperatures. Fuel cladding temperatures for accident conditions are evaluated in Section 4.6 of each FuelSolutions™ Canister Storage FSAR, and are limited to the allowable short-term cladding temperature presented in Table 4.3-1 of each FuelSolutions™ Canister Storage FSAR.

The transfer cask containing a canister loaded with SNF assemblies is analyzed for the design basis heat load concurrent with the postulated accident conditions described above. The resulting temperature distribution in the transfer cask for this postulated accident case is provided in

Section 4.6 of this FSAR. The corresponding structural effects of these accident condition temperatures on the transfer cask are evaluated in Section 3.7.2 of this FSAR.

2.3.3.2 Cask Drop

2.3.3.2.1 Storage Cask

As described in Section 1.2.2, the storage cask is designed to be loaded either vertically or horizontally. The operations of the storage cask for these modes of canister transfer are described in Chapter 8 of this FSAR. For vertical canister transfer, the loaded storage cask is transported to the ISFSI by lifting it vertically and moving it to its storage location on the ISFSI pad using the vertical transporter described in Section 1.2.1.4.3. Alternatively, the storage cask may be moved using a trailer, air pallets, or other suitable means. The maximum handling height for all these modes of movement with the storage cask oriented vertically is 36 inches.

For horizontal canister transfer, the loaded storage cask is rotated from horizontal to vertical using either upender/downender described in Section 1.2.1.4.2, then moved vertically to its storage location on the ISFSI pad using air pallets. While in the horizontal orientation for canister transfer, and when rotated from vertical to horizontal and vice-versa, the storage cask is captured and supported by the upender/downender J-skid. When in the vertical orientation on the J-skid, the bottom end of the storage cask is also approximately 24 inches above grade. The storage cask is lifted to remove it from the upender/downender J-skid. The maximum lift height for this operation is 36 inches.

The postulated drop accident of a loaded storage cask is defined to be a bottom end drop from a height of 36 inches onto a reinforced concrete slab on grade. This postulated drop scenario, shown in Figure 2.3-1, is consistent with the *technical specification* requirements contained in Section 12.3 of this FSAR. The determination of the resulting impact loads and the structural evaluation of the storage cask for this postulated accident condition is documented in Section 3.7.3 of this FSAR.

The effects of a postulated end drop of the storage cask onto other surfaces along the designated on-site transfer route or onto an ISFSI storage pad of a different design are to be addressed by the licensee, in accordance with 10CFR72.212.

2.3.3.2.2 Transfer Cask

In addition to canister loading and closure operations performed vertically inside the plant's fuel building, the transfer cask is used in a horizontal orientation outside the fuel building to move a loaded canister to an empty storage cask location. Horizontal transfer of the canister to a storage cask is then performed. Alternatively, the transfer cask is used in a horizontal orientation to move a loaded canister to an empty transportation cask location, and then perform a horizontal transfer of the canister to a transportation cask.

During transfer cask movement on the transfer skid and trailer with the cask in the horizontal orientation (described in Section 1.2.1.4.2), the side of the transfer cask structural shell is approximately 60 inches above grade. Similarly, the maximum height of the transfer cask when docked with the storage cask or transportation cask during horizontal canister transfer is approximately 63 inches above grade.

The postulated drop accident of a loaded transfer cask is defined to be a side drop from a maximum height of 72 inches onto a thick heavily reinforced concrete slab on grade, consistent with the *technical specification* requirements contained in Section 12.3 of this FSAR. The determination of the resulting impact loads and the structural evaluation of the transfer cask for this postulated accident condition is documented in Section 3.7.5 of this FSAR.

The effects of a postulated side drop of the transfer cask onto other surfaces along the designated on-site transfer route or onto an ISFSI storage pad of a different design are to be addressed by the licensee in accordance with 10CFR72.212. The effects of a postulated transfer cask drop inside the plant's fuel building is to be addressed by the licensee in accordance with 10CFR50.59.

2.3.3.3 Storage Cask Tip-over

The storage cask is evaluated for the effects of earthquake, tornado wind, and tornado missile in Section 3.7 and must be shown to remain stable. Since the storage cask is demonstrated to remain stable, there is no mechanism which could result in a tip-over of the storage cask onto the ISFSI pad during storage conditions. Therefore, a tip-over of the storage cask during storage conditions is not considered a credible event, as discussed in Section 2.6.3 of this FSAR. In addition, interaction of the storage casks with each other within a typical ISFSI array is considered a non-credible event.

As discussed in Section 2.3.3.2.1, the storage cask is rotated from vertical to horizontal in the J-skid using the upender/downender. As noted in Table 2.1-1, the upender/downender is not important to safety, and as such, failure of the upender/downender is postulated. The postulated tip-over accident of a loaded storage cask is defined as a tip-over from an equilibrium position with the storage cask secured to the J-skid about the J-skid lower corner with no initial velocity onto an energy absorbing impact limiter recessed into the ISFSI pad, as described in Section 1.2.1.4.2. The determination of the resulting impact loads and the structural evaluation of the storage cask for this postulated accident condition is documented in Section 3.7.4 of this FSAR.

The effects of a postulated tip-over of the storage cask onto other surfaces along the designated on-site transfer route are to be addressed by the licensee, in accordance with 10CFR72.212.

2.3.3.4 Fire

No combustible materials are used in the construction of the transfer cask or storage cask. Siting of the ISFSI is site-specific and should consider the proximity of combustible materials such as volatile liquids or gases, and natural vegetation. The ISFSI is typically sited in areas free of combustible materials. Combustible materials such as vehicle fuel and other miscellaneous combustible materials used during canister transfer operations are carefully controlled and fire protection provisions are invoked. Nonetheless, the storage cask and transfer cask is also evaluated for the effects of a postulated fire accident.

The postulated fire accident is defined using the transportation cask fire criteria described in 10CFR71.73, with the exception of the fire duration. The storage cask or transfer cask is assumed to be engulfed in a hydrocarbon fuel/air fire of sufficient extent and ambient conditions to provide an average emissivity coefficient of 0.9, with an average flame temperature of at least 1475ºF, and for a period of 5 minutes. The flame source extends 3 meters (10 feet) beyond the

cask external surface. In addition, the possibility of the fuel source entering the storage cask inlet vents is evaluated. The storage cask or transfer cask is assumed to start at steady state conditions for the 100ºF normal storage. The storage cask or transfer cask must be able to perform its intended safety function to permit recovery following the fire accident. The thermal analysis of the storage cask and transfer cask in this postulated fire accident condition is documented in Sections 4.6.1 and 4.6.2, respectively, of this FSAR.

2.3.3.5 Fuel Rod Rupture

The FuelSolutions™ canisters provide the confinement boundary and are designed for internal pressure loads due to fuel rod rupture. Each FuelSolutions™ Canister Storage FSAR discusses the pressure loads used for the specific canister design.

2.3.3.6 Internal Pressure

The transfer cask and storage cask are not subject to internal pressure loads. The transfer cask neutron shield is designed for an off-normal condition internal pressure of 45 psig, as noted in Section 2.3.2.3.

2.3.3.7 Leakage of the Confinement Boundary

Confinement boundary leakage is addressed in Chapter 7 of each FuelSolutions™ Canister Storage FSAR.

2.3.3.8 Explosive Overpressure

For the purpose of providing a design basis loading criteria for comparison to that for potential site-specific hazards to be evaluated by the licensee, the explosive overpressure is taken to be the same as the tornado wind pressure load defined in Section 2.3.4.2.

2.3.4 Natural Phenomena

2.3.4.1 Flooding

2.3.4.1.1 Flood Elevations

The storage cask is designed for an enveloping design basis flood, postulated to result from natural phenomena such as tsunami and seiches. For the purpose of this bounding generic evaluation, a 50-foot flood height, based on the transportation requirements of 10CFR71.73(c)(5), and 21 feet/second water velocity per Regulatory Guide 1.59,[23] are used.

Due to the short-term infrequent use of the transfer cask, it is not explicitly evaluated for the flood conditions. The licensee's operating procedures should restrict transfer cask use during flood conditions.

[23] Regulatory Guide 1.59, *Design Basis Floods for Nuclear Power Plants*, U.S. Nuclear Regulatory Commission, August 1977.

2.3.4.1.2 Flooding Load Effects

The storage cask is non-pressure retaining because of its open vents and need not be analyzed for the pressure due to the hydraulic head of water associated with the flood height stated above. The lateral stability of the loaded storage cask due to flooding is evaluated by comparing the overturning moment, resulting from the lateral pressure caused by the flood current, to the resisting moment due to the gravitational force less the buoyancy force acting on the storage cask. This evaluation does not explicitly consider the dynamic effects of flood current, wind wave, hurricane, and tsunami. However, the flood height and water velocity used are sufficiently bounding to envelope these effects for the vast majority of sites.

2.3.4.1.3 Flooding Load Application

Section 3.7.8 of this FSAR presents the results of the storage cask stability evaluation for design basis flood conditions. In the structural evaluation of the storage cask, the pressure caused by the current is applied as a lateral pressure on the downstream side of the storage cask. The buoyancy force is calculated as the total mass of water displaced by the volume of the storage cask and canister and conservatively neglects the volume of the cask air inlet channels and outlet ducts. The force is applied vertically upwards at the center of gravity of the cask.

2.3.4.1.4 Flood Protection

To assure the maximum protection against flooding when siting an ISFSI, the licensee should consider site-specific flood hazards such as up-stream dam failures, current local rainfall intensity projections, and local topography; and locate the site above the prevailing flood plain where possible. However, the storage cask is demonstrated in this FSAR to be suitable for the design basis flood conditions for ISFSI sites that are subject to flooding.

The effects of flooding on the canister, including the hydraulic head of water acting on the canister shell, are addressed in each FuelSolutions™ Canister Storage FSAR.

2.3.4.1.5 Other Flooding Effects

As a result of flooding, the flood water and associated by-products may affect the performance of the storage cask. The related flooding effects and the associated design basis include the following:

- Blockage of Inlet Vents by Water or Silt: Water or silt may block the inlet vents or collect in the cask annulus. Water or silt in the inlet vents is bounded by the “all the vents blocked” case, which is discussed in Section 2.3.3.1. Partial blockage of the annulus, which restricts air flow, would be detected by a change (i.e., increase) in the concrete temperature that is monitored in accordance with the *technical specification* in Section 12.3. Corrective actions would then be employed to clear the blockage.
- Scouring of Foundation: Scouring of the ISFSI pad under the cask may result in the tipping or tip-over of the cask. A substantial settlement of the foundation and pad are required to cause such a tip-over. This is considered a non-credible event as discussed in Section 2.6.3.
- Temperature Gradients Resulting from Rapid Immersion: This effect is addressed in the thermal evaluation in Section 4.6.1. The design basis water temperature for this evaluation is 40°F.

2.3.4.2 Tornado

The storage cask and transfer cask are designed to withstand the loadings associated with tornadoes, as prescribed by Regulatory Guide 1.76.[24] The loading characteristics specified for Region I, which is the most severe for the contiguous United States, is used as the design basis tornado loading. The design basis tornado load characteristics are presented in Table 2.3-4. This loading includes high winds, tornado winds, wind-generated pressure differentials, and tornado-generated missiles. The design basis tornado missiles, which are based on NUREG-0800,[25] are described in Table 2.3-5. The high wind, tornado wind, and tornado missile loadings are evaluated for their effects on the storage cask and transfer cask, including kinematic stability and missile impact effects, as documented in Section 3.7 of this FSAR. The following sections describe the design basis tornado loads in detail.

2.3.4.2.1 Applicable Design Parameters

The design basis tornado (DBT) intensities used for the evaluation of the storage cask and transfer cask are obtained from Regulatory Guide 1.76, conservatively using Region I intensities. The maximum wind speed and the pressure drop for this region are listed in Table 2.3-4.

2.3.4.2.2 Determination of Forces on Structures

2.3.4.2.2.1 Storage Cask

The surface pressure on the storage cask due to the tornado wind is calculated from the following equation, obtained from ASCE 7-93.[26]

$$P = q_z G_h C_f = 356 \text{ psf}$$

Where:

q_z = $0.00256K_z(IV)^2$ (psf) = 519 psf

K_z = velocity pressure exposure coefficient
= 1.27 (from ASCE 7, Table 6, for a height 20 feet above ground level and Exposure D)

V = basic wind velocity
= 360 mph (from Table 2.3-4)

I = importance factor
= 1.11 (from ASCE 7, Table 5, for Category III)

G_h = gust response factor
= 1.32 (from ASCE 7, Table 8, for Exposure C or D)

---

[24] Regulatory Guide 1.76, *Design Basis Tornado for Nuclear Power Plants*, U.S. Nuclear Regulatory Commission, April 1974.

[25] NUREG-0800, *Standard Review Plan for the Review of Safety Analysis Reports for Nuclear Power Reactors*, U.S. Nuclear Regulatory Commission, July 1981.

[26] ANSI/ASCE 7-93, *Minimum Design Loads for Buildings and Other Structures*, American Society of Civil Engineers, 1993.

C_f = force coefficient
= 0.52 (from ASCE 7, Table 12)

Therefore, a pressure of 356 psf is used in the tornado wind analyses of the storage cask.

The results of the tornado wind loading analyses for the storage cask are presented in Section 3.7.9.1 of this FSAR.

2.3.4.2.2.2 Transfer Cask

The tornado wind pressure load on the transfer cask is calculated from the following equation obtained from ASCE 7-93.

$$P = q_z G_h C_f = 425 \text{ psf}$$

Where:

q_z = $0.00256 K_z (IV)^2 = 491$ psf

I = 1.11 (maximum value from ASCE 7, Table 5)

K_z = 1.2 (from ASCE 7, Table 6, for a height 13 feet above ground level and Exposure D)

G_h = 1.15 (from ASCE 7, Table 8, for Exposure C or D)

C_f = 0.75 (from ASCE 7, Table 12)

Therefore, a pressure of 425 psf is used in the tornado wind analysis of the transfer cask.

The transfer cask is analyzed for kinematic stability under this loading in a horizontal orientation, while resting on the transfer skid and trailer. Section 3.7.9.2 of this FSAR presents the results of this analysis.

2.3.4.3 Tornado Missiles

The determination of impact forces created by the DBT-generated missile acting on the storage cask is based on the criteria provided by NUREG-0800, Section 3.5.1.4, Paragraph III.4. Accordingly, three types of DBT missiles are postulated including: (1) a 4000 pound automobile (with a frontal area of 20 square feet), (2) a 275-pound, 8-inch diameter armor piercing artillery shell, and (3) a 1-inch diameter solid steel sphere. These missiles are assumed to impact with a horizontal velocity equal to 35% of the maximum wind velocity, in accordance with NUREG-0800, which gives $0.35 \times 360 = 126$ mph. These missiles are also assumed to impact with a vertical velocity equal to 70% of the horizontal velocity, in accordance with NUREG-0800, which gives $0.7 \times 126 = 88$ mph. In addition, these missiles are assumed to impact at normal incidence.

2.3.4.3.1 Storage Cask

The storage cask must be evaluated for the overall effects of a DBT missile impact, including overturning and sliding of the storage cask.

The results of the structural evaluation for tornado missile effects on the storage cask are presented in Section 3.7.9.1 of this FSAR.

2.3.4.3.2 Transfer Cask

The stability of the transfer cask must be evaluated to show that sliding and/or overturning of the transfer cask when secured to the transfer skid and trailer does not occur.

The results of the structural evaluation for tornado missile effects on the storage cask are presented in Section 3.7.9.2 of this FSAR.

2.3.4.4 Earthquake

The storage cask and transfer cask are designed for an enveloping design basis earthquake (DBE), as specified by 10CFR72.122(b). The DBE ground acceleration is defined as 0.25*g* acting simultaneously in two orthogonal horizontal directions, and 0.25*g* vertical. These maximum zero period accelerations (ZPAs) are used to perform the stability analysis of the transfer cask and storage cask as documented in Section 3.7.10 of this FSAR, and are used in the subsequent structural analyses of the storage cask and transfer cask. The same ZPAs are used in the structural evaluation of the canister, as documented in Section 3.7 of each FuelSolutions™ Canister Storage FSAR.

2.3.4.4.1 Seismic Analysis Criteria

The storage cask and the transfer cask are designed to withstand an earthquake characterized by the Regulatory Guide 1.60[27] response spectra, scaled to the maximum ground acceleration determined as described above. The storage cask and transfer cask are analyzed for earthquake loads using equivalent static methods. Analyses are performed to show that the loaded casks are stable and do not tip over when subjected to the design basis earthquake loading. The results of the structural evaluation for earthquake effects are presented in Section 3.7 of this FSAR.

2.3.4.4.2 Component Seismic Analyses

2.3.4.4.2.1 Storage Cask

The storage cask must be analyzed for stability under the influence of the inertia forces caused by the combined horizontal and vertical seismic accelerations. The resulting stresses in the structural components of the storage cask are also to be analyzed. In addition, the stability of the storage cask for a bounding differential displacement of the ISFSI pad beneath the storage cask is evaluated. The structural analysis of the storage cask for seismic loads is provided in Section 3.7.10.1 of this FSAR.

2.3.4.4.2.2 Transfer Cask

The transfer cask must be analyzed for stability under the influence of the inertia forces caused by the combined horizontal and vertical seismic accelerations postulated for the cask during fuel loading operations. The resulting stresses in the structural components of the transfer cask are also to be analyzed. The structural analysis of the transfer cask for seismic loads is provided in Section 3.7.10.2 of this FSAR.

---

[27] Regulatory Guide 1.60, *Design Response Spectra for Seismic Design of Nuclear Power Plant*, Revision 1, U.S. Nuclear Regulatory Commission, 1973.

2.3.4.4.2.3 Canister

The seismic evaluation for each FuelSolutions™ canister is provided in Section 3.7 of the respective FuelSolutions™ Canister Storage FSAR.

2.3.4.5 Wind

The design basis wind (DBW) speed for the evaluation of the storage cask and transfer cask is taken to be 150 mph in accordance with ASCE 7, which is applicable to the contiguous United States. The effects of DBW are considered as an off-normal condition loading.

The corresponding surface pressure due to the DBW is determined by proportioning the design basis tornado wind pressure by the square of the ratio of the wind speeds. The resulting pressure due to the DBW is $356 \times (150/360)^2 = 62$ psf for the storage cask and $425 \times (150/360)^2 = 74$ psf for the transfer cask. The structural analyses of the storage cask and transfer cask for DBW loads are presented in Section 3.6.2 of this FSAR.

2.3.4.6 Burial Under Debris

Debris may be deposited around the storage cask due to a number of phenomena, such as wind storms, floods, or land slides. The consequence of such events is anticipated to be partial or complete blockage of the storage cask inlet vents. This condition is bounded by the fully blocked vent case concurrent with maximum normal ambient conditions, which is described in Section 2.3.3.1. Due to the short-term infrequent use of the transfer cask and the limited exposure to such hazards, it is not explicitly evaluated for burial under debris.

2.3.4.7 Lightning

The storage cask steel liner and reinforcement include grounding provisions meeting the requirements of the Lightning Protection Code[28] and the applicable requirements of the National Electric Code.[29] Provisions for the attachment of an external ground cable from the storage cask to an ISFSI grounding grid are provided. The need for such grounding is to be evaluated by the licensee in accordance with site-specific conditions, local codes and standards, local topography and nearby structures, and the requirements of the Lightning Protection Code. The licensee's operating procedures should require that the transfer cask not be used to conduct canister transfer operations outside the plant's fuel building during weather conditions in which lightning could occur.

2.3.4.8 Snow and Ice

Loads due to snow and ice are considered live loads, as described in Section 2.3.1.6. The snow and ice loading criterion is based on the ASCE 7, Section 7.0. The flat roof loading, in the contiguous United States, is given by the formula,

$$p_f = 0.7\, C_e\, C_t\, I\, p_g$$

[28] NFPA 78-1983, *Electric, Life Safety, and Lightning Protection Codes*, National Fire Protection Association, 1983.

[29] NFPA 70-1983, *National Electric Code*, National Fire Protection Association, 1983.

Where:

p_f = Flat roof snow load (psf)

C_e = Exposure factor, 1.2 (max. value)

C_t = Thermal factor, 1.0 (heated structure)

I = Importance factor, 1.2 (essential facility)

p_g = Ground snow load = 100 psf

The values of the coefficients C_e, C_t, and I are given in ASCE 7, Tables 18, 19, and 20, respectively. These coefficients are interpreted as follows in obtaining their values:

- For the exposure factor C_e, the storage casks are assumed to be located in "densely forested areas that experience little wind, with roof located tight in among conifers." This assumption is conservative, since the lack of wind would allow buildup of snow and ice on the structure. Using this conservative assumption, the exposure factor is 1.2.
- For the thermal factor C_t, the storage cask is assumed to be a "heated structure." This assumption is justified due to the decay heat loading of the SNF stored in the canister. Using this assumption, the thermal factor is 1.0.
- For the importance factor I, the storage cask is considered to be a Category III structure (structures designed as essential facilities). The importance factor, therefore, is 1.2.

A bounding value of 100 psf ground snow load is conservatively used.

Therefore, the snow and ice loading on the storage cask is taken to be:

p_f = 0.7 x 1.2 x 1.0 x 1.2 x 100 = 101 psf.

The 101 psf snow and ice load is included as a live load on the storage cask, as discussed in Section 2.3.1.6.

The transfer cask is not explicitly evaluated for the snow and ice loading since these loadings are enveloped by other more severe design basis loadings (e.g., on-site transport vibration loads, as discussed in Section 2.3.1.7).

2.3.4.9 Volcanism

No 10CFR50 licensed facility site in the United States is located in close proximity to areas of known volcanic activity. As a result, the direct hazard presented by eruptions of lava, pumice, or steam is not considered credible at an ISFSI on the same site. The only consequences of an eruption that are of concern are ash fall and mud flow. While it is highly unlikely that these effects would entirely block the storage cask air inlets, if such blockage occurs, it would be identified during the periodic inspection and cleared in accordance with the *technical specification* contained in Section 12.3 of this FSAR. In addition, the U.S. Geological Service presently monitors all active and inactive volcanoes and would provide a warning to the licensee if any indication of imminent activity has been detected. Therefore, no further evaluation of the FuelSolutions™ Storage System for the effects of volcanism is required.

2.3.4.10 Site-Specific Conditions

Other site-specific conditions will be addressed on a site-specific basis, as applicable. Each licensee is required to perform a 10CFR72.212 evaluation to assure that no site-specific environmental phenomena or design conditions exist that are not bounded by or equivalent to those defined in this chapter and the C of C.

2.3.5 Load Combination Criteria

2.3.5.1 Storage Cask

The storage cask is subjected to normal, off-normal, postulated accident, and natural phenomena condition loadings as defined in this chapter. These loads are summarized as follows:

- Normal Loads – Normal ambient conditions, dead, live, handling, snow and ice.
- Off-Normal Loads – Extreme ambient conditions, wind, cask misalignment during canister horizontal transfer.
- Postulated Accident and Natural Phenomena Loads – Complete blockage of storage cask air inlet and outlet vents, cask end drop, cask tip-over on J-skid, flood, fire, tornado, earthquake.

The above loadings are combined together in accordance with the load combinations identified in NUREG-1536[30] for reinforced concrete components, which are consistent with those specified in ANSI/ANS 57.9 supplemented by the load combination for tornado effects obtained from ACI 349. These load combinations are used in the structural evaluation of the storage cask reinforced concrete components as summarized in Table 2.3-6. Similarly, the loadings defined above are combined together in accordance with the load combinations identified in NUREG-1536 for the structural steel components, which are consistent with those specified in ANSI/ANS 57.9. These load combinations are used in the structural evaluation of the storage cask structural steel components as summarized in Table 2.3-7.

The allowable moment and shear loads on the storage cask reinforced concrete are provided in Section 3.1 of this FSAR. Load combination results for the storage cask reinforced concrete and structural steel for normal, off-normal, and accident conditions are provided in Sections 3.5, 3.6, and 3.7 of this FSAR, respectively.

2.3.5.2 Transfer Cask

The transfer cask is subjected to the normal, off-normal, postulated accident, and natural phenomena condition loadings as defined in this chapter. These loads are summarized as follows:

- Normal Loads – Normal ambient conditions, pressure (neutron shield), dead, handling, test.
- Off-Normal Loads – Off-normal ambient conditions, internal pressure (neutron shield), misalignment during canister horizontal transfer, wind.

[30] NUREG-1536, *Standard Review Plan for Dry Cask Storage Systems*, U.S. Nuclear Regulatory Commission, January 1997.

- Postulated Accident and Natural Phenomena Loads – Loss of neutron shield, cask side drop, fire, tornado, earthquake.

The above loadings are combined together and used in the structural evaluation of the transfer cask. The load combinations are categorized based on the ASME service level criteria for evaluation against the corresponding allowable values. The allowable values are provided in Section 3.1 of this FSAR. Although not directly applicable to components designed in accordance with Section III of the ASME Code, the combinations for steel structures (allowable stress design) of NUREG-1536 and ANSI/ANS 59.9 are used for guidance in developing the transfer cask load combinations.

Load combination results and comparisons to allowable values for the FuelSolutions™ W100 Transfer Cask for normal, off-normal, and accident conditions are indicated in Table 2.3-8 and results are provided in Sections 3.5, 3.6, and 3.7 of this FSAR, respectively.

Table 2.3-1 - Summary of Maximum Historical Annual Average Temperatures at Domestic Power Reactor Sites[31]

State	Plant	Max. Historical Annual Avg. (°F)	State	Plant	Max. Historical Annual Avg. (°F)
AL	Browns Ferry	62.61	MO	Callaway	57.03
	Farley	68.19	NE	Cooper	54.88
AZ	Palo Verde	72.65		Fort Calhoun	53.06
AR	ANO	64.02	NH	Seabrook	48.14
CA	Diablo Canyon	61.55	NJ	Hope Creek	56.29
	Humboldt Bay	55.33		Oyster Creek	56.20
	Rancho Seco	60.99		Salem	56.29
	San Onofre	63.94	NY	FitzPatrick	49.48
CT	Haddam Neck	52.50		Ginna	49.63
	Millstone	52.50		Indian Point	53.39
FL	Crystal River	73.79		Nine Mile Point	49.48
	St. Lucie	74.72	NC	Brunswick	64.91
	Turkey Point	75.23		McGuire	59.34
GA	Hatch	68.79		Shearon Harris	62.05
	Vogtle	66.46	OH	Davis Besse	53.04
IL	Braidwood	53.12		Perry	51.54
	Byron	52.26	OR	Trojan	54.07
	Clinton	56.49	PA	Beaver Valley	52.35
	Dresden	53.12		Limerick	53.20
	LaSalle	53.12		Peach Bottom	54.24
	Quad Cities	52.21		Susquehanna	52.47
	Zion	50.68		Three Mile Island	54.89
IA	Duane Arnold	52.76	SC	Catawba	61.98
KS	Wolf Creek	58.11		Oconee	62.73
LA	River Bend	70.18		Robinson	65.72
	Waterford	70.18		Summer	66.22
ME	Maine Yankee	47.49	TN	Sequoyah	59.98
MD	Calvert Cliffs	60.11		Watts Bar	57.34
MA	Pilgrim	53.41	TX	Comanche Peak	67.14
	Yankee Rowe	48.27		South Texas	73.01
MI	Big Rock Point	46.28	VT	Vermont Yankee	46.83
	Cook	51.89	VA	North Anna	59.15
	Fermi	50.05		Surry	60.07
	Palisades	51.89	WA	WNP-2	55.20
MN	Monticello	48.89	WI	Kewaunee	47.89
	Prairie Island	48.89		LaCrosse	51.34
MS	Grand Gulf	65.43		Point Beach	47.89

[31] United States Historical Climatology Network (HCN) Serial Temperature Data, 1997, U.S. NOAA.

Table 2.3-2 - Insolation Loads[1,2]

Component	Surface	Insolation (BTU/hr-ft^2)
Storage Cask	Top (horizontal)	123
	Sides (curved vertical)	62
Transfer Cask	Sides (curved horizontal)	62
	Ends (vertical)	31

Notes:

(1) Steady-state analysis performed for 125ºF ambient cases, 24-hour average used.

(2) 100ºF/normal insolation assumed for other off-normal and accident conditions (all vents blocked, loss of neutron shielding.

Table 2.3-3 - Fuel Building Ambient Conditions

Location	Condition	Value
Spent Fuel Pool	Temperature (ºF)	120°
	Boric Acid Concentration (ppm)	0 ppm for analysis
Cask Decon Area and Receiving Bay	Temperature (ºF)	77°
	Relative Humidity	0 % for analysis

Table 2.3-4 - Tornado Loading Characteristics

Loading Condition[1]	Design Basis Value
Rotational Wind Speed	290 mph
Maximum Translational Wind Speed	70 mph
Maximum Wind Speed	360 mph

Notes:

(1) Regulatory Guide 1.76, *Design Basis Tornado for Nuclear Power Plants*, U.S. Nuclear Regulatory Commission, April 1974.

Table 2.3-5 - Tornado-Generated Missiles

Missile Description[1]	Weight	Maximum Velocity	
		Horizontal[2]	Vertical
Automobile (20 sq. ft. frontal area)	4,000 lb.	126 mph	88 mph
Armor Piercing Shell (8 inch diameter)	275 lb.	126 mph	88 mph
Hardened Steel Sphere (1 inch diameter)	0.15 lb.	126 mph	88 mph

Notes:

(1) NUREG-0800, *Standard Review Plan for the Review of Safety Analysis Reports for Nuclear Power Reactors*, U.S. Nuclear Regulatory Commission, July 1981.

(2) Maximum horizontal wind velocity.

Table 2.3-6 - Storage Cask Load Combinations - Reinforced Concrete Components[(1)]

Comb. No.	Capacity	Dead-weight	Live	Wind	Thermal	Seismic	Tornado	Drop or Tip-over	Flood
Normal Operating Conditions									
1	$U_c >$	1.4 D	1.7 L						
Off-Normal Conditions									
2	$U_c >$	1.05 D	1.275 L		1.275 T				
3	$U_c >$	1.05 D	1.275 L	1.275 W	1.275 T				
Postulated Accident Conditions									
4	$U_c >$	D	L		T	E			
5	$U_c >$	D	L		T				F
6	$U_c >$	D	L		T			A	
7	$U_c >$	D	L		T_a				
8	$U_c >$	D	L		T		W_t		
Overturning and Sliding - Accident Conditions									
O/S 1	O/S ≥	1.1D				1.1E			
O/S 2	O/S ≥	1.1D					$1.1W_t$		
O/S 3	O/S ≥	1.1D							1.1F

Notes:

(1) Load definitions are as follows:

U_c = Available strength of a cross-section per ACI 349
D = Loading arising due to deadweight
L = Loading arising due to live load, including snow, ice, handling and misalignment
W = Loading arising due to normal and off-normal winds
T = Loading arising due to normal thermal loading
T_a = Loading arising due to off-normal or accident thermal loading including fire and vent blockage
E = Loading arising due to earthquake
W_t = Loading arising due to tornado
A = Loading arising due to postulated end drop or tip-over
F = Load arising due to flood

Table 2.3-7 - Storage Cask Load Combinations - Structural Steel Components[1]

Comb. No.	Capacity	Dead-weight	Live	Wind	Thermal	Seismic	Tornado	Drop or Tip-over	Flood
Normal Operating Conditions									
1a	S >	D	L						
1b	S_v >	D	L						
Off-Normal Conditions									
2a	1.3 S >	D	L	W					
2b	1.3 S_v >	D	L	W					
3	1.5 S >	D	L	W	T				
4	1.4 S_v >	D	L	W	T				
Postulated Accident Conditions									
5	1.6 S >	D	L		T		W_t		
6	1.4 S_v >	D	L		T		W_t		
7	1.6 S >	D	L		T	E			
8	1.4 S_v >	D	L		T	E			
9	1.6 S >	D	L		T				F
10	1.4 S_v >	D	L		T				F
11	1.7 S >	D	L		T			A	
12	1.4 S_v >	D	L		T			A	
13	1.7 S >	D	L		T_a				
14	1.4 S_v >	D	L		T_a				

Notes:

(1) Load definitions are as follows:

S = Available strength of a section, member, or connection per AISC
S_v = Available shear strength of a section, member, or connection
D = Loading arising due to deadweight
L = Loading arising due to live load, including snow, ice, handling and misalignment
W = Loading arising due to normal and off-normal wind
T = Loading arising due to normal thermal loading
T_a = Loading arising due to off-normal or accident thermal loading including fire and vent blockage
E = Loading arising due to earthquake
W_t = Loading arising due to tornado
A = Loading arising due to postulated end drop or tip-over
F = Load arising due to flood

Table 2.3-8 - Transfer Cask Load Combinations[1,2]

Comb. No.	Dead-weight	Live Load	Handling	Wind	Thermal	Seismic	Tornado	Drop or Tip-over
Normal Operating Conditions (Service Level A)								
1	D	L			T			
2	D	L	L_h		T			
Off-Normal Conditions (Service Level B)								
3	D	L		W	T			
4	D	L	L_m		T			
Postulated Accident Conditions (Service Level D)								
5	D	L			T_a			
6	D	L			T	E		
7	D	L			T			A
8	D	L			T		W_t	
Overturning and Sliding - Accident Conditions								
O/S 1	O/S ≥	1.1D				1.1E		
O/S 2	O/S ≥	1.1D					$1.1W_t$	

Notes:

(1) Stress limits are in accordance with ASME Section III, Subsection NF.

(2) Load definitions are as follows:

- D = Loading arising due to deadweight
- L = Loading arising due to live load, including canister and contents
- L_h = Loading arising due to normal handling
- L_m = Loading arising due to misalignment
- W = Loading arising due to design-basis wind
- T = Loading arising due to normal or off-normal thermal loading
- T_a = Loading arising due to accident thermal loading, including fire
- E = Loading arising due to earthquake
- W_t = Loading arising due to tornado
- A = Loading arising due to postulated side drop

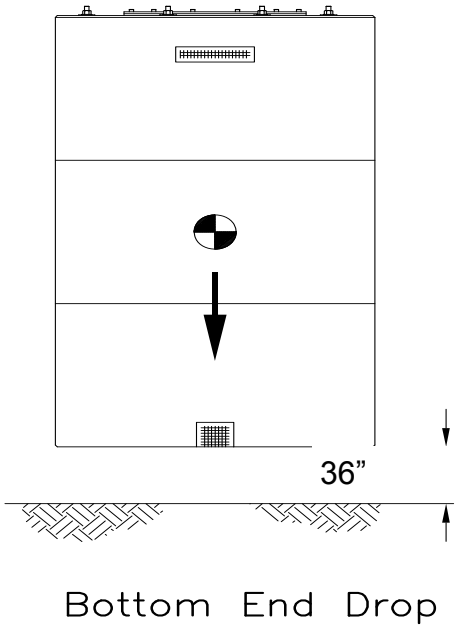

Figure 2.3-1 - Storage Cask Postulated Drop Condition

2.4 Safety Protection Systems

The FuelSolutions™ SFMS has design features that specifically contribute to safety. This section summarizes these features.

2.4.1 General

The FuelSolutions™ W150 Storage Cask and W100 Transfer Cask are designed to provide structural protection and biological shielding for the FuelSolutions™ canister containing SNF assemblies. The storage cask, transfer cask, and canister are designed to withstand all design basis normal, off-normal, and postulated accident conditions, providing assurance that a release of radioactive material or excessive radiation exposure to site personnel or members of the general public does not occur. The design features of the FuelSolutions™ W150 Storage Cask and W100 Transfer Cask are summarized in the paragraphs that follow and are described further in Section 1.2.1 of this FSAR. The design features of the FuelSolutions™ canisters are summarized in the following paragraphs and are described further in Sections 1.2.1 and 2.4 of each FuelSolutions™ Canister Storage FSAR.

2.4.2 Protection by Multiple Confinement Barriers and Systems

2.4.2.1 Confinement Barriers and Systems

The FuelSolutions™ canister shell assembly functions as the confinement boundary for all radioactive materials during dry storage, in accordance with the requirements of 10CFR72. Redundant sealing of the canister shell is provided by two welded closures at each end of the canister. The storage cask and transfer cask do not degrade the canister in its ability to perform its confinement function for all design basis conditions. Confinement is discussed further in Chapter 7 of this FSAR and each FuelSolutions™ Canister Storage FSAR. Pressure testing and helium leak testing are performed to verify confinement function in accordance with the *technical specifications* contained in Section 12.3 of this FSAR.

2.4.2.2 Passive Cooling

2.4.2.2.1 Storage Cask

The storage cask design uses passive natural convective cooling to reduce fuel cladding temperatures within the canister. In addition, the convective cooling flow through the storage cask and the thermal shield serve to minimize the decay heat transferred to the storage cask walls, reducing the temperature gradients through the wall section and maintaining the temperatures of the concrete below allowable values. The vertical orientation of the storage cask and canister maximizes the stack height, allowing the heated air within the storage cask to flow upward through the annular cavity and out the outlet vents. This feature, along with the thermal shield, allows the storage cask to provide sufficient air flow, while keeping the size of the annulus between the canister and storage cask to a minimum. The design features incorporated into the storage cask to assure that temperatures are maintained within their allowable values are discussed further in Section 1.2.1.1 of this FSAR.

2.4.2.2.2 Transfer Cask

The transfer cask is capable of providing for the removal of decay heat during canister loading, closure, and transfer operations so that the maximum fuel cladding temperature and canister basket temperatures remain within allowable values. The transfer cask design features that facilitate heat removal are discussed further in Section 1.2.1.2 of this FSAR.

2.4.3 Protection by Equipment and Instrumentation Selection

2.4.3.1 Support Equipment

The support equipment used with the FuelSolutions™ canisters, storage cask, and transfer cask is classified as not important to safety (except as noted in Table 2.1-1), as the components that are important to safety are designed to withstand the failure of any of this equipment. The maximum handling heights imposed for the storage cask and the transfer cask containing a loaded canister, to provide assurance of safety, are in accordance with the *technical specifications* contained in Section 12.3 of this FSAR.

2.4.3.2 Instrumentation

The canister, storage cask, and transfer cask do not require any instrumentation to assure the safe handling and storage of SNF. Nonetheless, the storage cask includes two thermowells that facilitate the use of thermocouples located at mid-height in the storage cask concrete wall. As discussed in Section 1.2.1.1, one thermocouple is at the inner concrete surface adjacent to the cask liner and one is at mid-thickness. The liner thermocouple is used to directly monitor concrete temperatures during dry storage. The mid-thickness thermocouple provides additional concrete temperature monitoring capability, should it be necessary. The *technical specifications* for monitoring cask temperatures using the liner thermocouple are contained in Section 12.3 of this FSAR.

2.4.4 Nuclear Criticality Safety

2.4.4.1 Control Methods for Prevention of Criticality

The FuelSolutions™ canister includes fixed borated neutron-absorbing materials and provides geometric spacing of adjacent fuel assemblies to assure subcriticality for normal, off-normal, and accident conditions, including optimum moderation and considering all biases and uncertainties. The criticality analysis of the FuelSolutions™ canister is discussed in Section 6.3 of this FSAR and Chapter 6 of each FuelSolutions™ Canister Storage FSAR.

2.4.4.2 Error Contingency Criteria

The effects of physical and analytical bias and uncertainties are included in the criticality analysis of the FuelSolutions™ canister, as discussed in Section 6.3 of this FSAR and Chapter 6 of each FuelSolutions™ Canister Storage FSAR.

2.4.4.3 Verification Analyses

Verification of analytical codes and models used in the criticality analysis of the FuelSolutions™ canister are discussed in Section 6.3 of this FSAR and Chapter 6 of each FuelSolutions™ Canister Storage FSAR.

2.4.5 Radiological Protection

The storage cask and transfer cask are designed to provide substantial biological shielding to protect plant personnel and the public from the ionizing radiation being emitted from the SNF within. Additionally, both ends of the canister include biological shielding to maintain occupational exposures ALARA for fuel loading and canister draining, drying, backfilling, sealing, and transfer operations. These components are designed to withstand normal, off-normal, and postulated accident condition loadings without unacceptable degradation of shielding effectiveness. The shielding design features and criteria for the storage cask and transfer cask are discussed in Sections 1.2.1.1 and 1.2.1.2. The shielding function of the FuelSolutions™ canister are discussed in Section 1.2.1 of each FuelSolutions™ Canister Storage FSAR.

The potential for surface contamination of the canister by fuel pool water during wet loading operations is minimized by the use of a seal that provides a means to isolate the annulus between the canister outer surface and the transfer cask inner surface during fuel loading operations. A further description of the annulus seal design is contained in Section 1.2.1.4.1. The maximum surface contamination for the canister to provide assurance that loose contamination does not become airborne particulate is in accordance with the *technical specifications* contained in Section 12.3 of this FSAR.

2.4.6 Fire and Explosion Protection

The canister, storage cask, and transfer cask are designed to provide reasonable levels of fire and explosion protection that could be postulated to occur in or around an ISFSI. No combustible or explosive materials are used in the construction or operation of these components. Nonetheless, a postulated design basis fire is evaluated, as defined in Section 2.3.3.4.

For the purpose of providing the licensee with design basis loading criteria for comparison to site-specific hazards, a postulated explosion is taken to be the same as the tornado wind pressure load defined in Section 2.3.4.2.

This page intentionally left blank.

2.5 Decommissioning

Decommissioning is discussed in Chapter 14 of this FSAR.

This page intentionally left blank.

2.6 Supplemental Information

2.6.1 ACI Code Compliance

As discussed in Section 2.1.2, the FuelSolutions™ W150 Storage Cask reinforced concrete is designed and constructed in accordance with ACI 349 and ACI 318, respectively, to the maximum extent practicable, consistent with that used on canister-based reinforced concrete dry storage systems previously approved by the NRC. The clarifications made to the applicable portions of the ACI 349 and 318 Codes, and the bases for these clarifications, are provided in Table 2.6-1.

2.6.2 ASME Code Compliance

As discussed in Section 2.1.2, the FuelSolutions™ W100 Transfer Cask structural components are designed and constructed in accordance with Section III, Subsection NF of the ASME Code to the maximum extent practicable, consistent with that used on canister-based dry storage systems previously approved by the NRC. The clarifications made to the applicable portions of the ASME Code, and the bases for these clarifications, are provided in Table 2.6-2.

Table 2.6-1 - FuelSolutions™ W150 Storage Cask ACI Code Requirement Compliance Summary (6 Pages)

Item	ACI Requirement	Issue	Alternative Compliance Basis
ACI 349:			
1	**General for ACI 349**	The use of the term "Owner" does not apply.	Where the term "Owner" is used, the FuelSolutions™ SFMS licensee, Energy*Solutions* Spent Fuel Division, Inc., should be substituted.
2	**General for Chapter 1 - "General Requirements"**	References to "construction" do not apply.	Refer to ACI 318.
3	**1.1 - "Scope:"** "This Code provides the minimum requirements for the design and construction of nuclear safety related concrete structures and structural elements for nuclear power generating stations."	The FuelSolutions™ W150 Storage Cask will not be constructed as a 10CFR50, Appendix B, "safety related" component.	The FuelSolutions™ W150 Storage Cask will be constructed based on a 10CFR72 "graded quality" approach.
4	**1.2 - "Drawings and Calculations:"**		
	"1.2.1 - Copies of structural drawings, typical details, and specifications for all reinforced concrete construction shall be signed by a licensed engineer and shall be retained by the Owner, or his designee, as a permanent record for the life of the structure. These drawings, details, and specifications shall show . . . provisions for dimensional changes resulting from creep, shrinkage, and temperatures; . . . and loads used in the design."	1. The FuelSolutions™ W150 Storage Cask drawings, typical details, and specifications will not necessarily be signed by a licensed engineer. 2. Provisions for dimensional changes will not be specifically addressed on structural drawings. 3. Loads used in the design will not be shown on drawings, typical details, or specifications.	1. Licensed engineer certification of drawings, typical details, and specifications is not typically provided for components licensed under 10CFR72. 2. Finished storage cask will meet dimensional inspection requirements provided in this FSAR. 3. Loads used in the design are presented in this FSAR.

Table 2.6-1 - FuelSolutions™ W150 Storage Cask ACI Code Requirement Compliance Summary (6 Pages)

Item	ACI Requirement	Issue	Alternative Compliance Basis
5	**1.3 - "Inspection"**	This section does not apply.	Refer to ACI 318. 10CFR72.174 is applicable for record retention.
6	**1.5 - "Quality Assurance Program:"** "A quality assurance program covering nuclear safety related structures shall be developed prior to starting any work. The general requirements and guidelines for establishing and executing the quality assurance program during the design and construction phases of nuclear power generating stations are established by Title 10 of the Code of Federal Regulations, Part 50 (10CFR50), Appendix B."	The construction of the FuelSolutions™ W150 Storage Cask will not be governed by a 10CFR50, Appendix B, QA program.	The construction of the FuelSolutions™ W150 Storage Cask will be governed by a 10CFR72, Subpart G, QA program.
7	**Chapter 3 - "Materials"**	Sections 3.1, 3.2.3, 3.3.4, 3.5.3.2, 3.6.7, and 3.7 do not apply.	Refer to ACI-318, Sections 3.1 and 3.7. ACI 349 Sections 3.2.3, 3.3.4, 3.5.3.2, and 3.6.7 pertain to testing frequencies that are not provided in ACI 318. These frequencies will be established to be consistent with the graded quality category of the item as addressed under the Energy*Solutions* SFD QA Program.
	Section 3.8 - "Standards Cited in this Code"	Different editions of the ASTM standards listed may be used in the construction of a FuelSolutions™ W150 Storage Cask.	Materials and testing will be to the ASTM standard cited in ACI 349 and ACI 318, except that the year of the ASTM standard may be as cited in ACI 318-95 or the latest ASTM standard issued.

Table 2.6-1 - FuelSolutions™ W150 Storage Cask ACI Code Requirement Compliance Summary (6 Pages)

Item	ACI Requirement	Issue	Alternative Compliance Basis
8	**Chapter 4 - "Concrete Quality"**	With the exception of Section 4.1.4, this chapter does not apply.	Refer to ACI 318, Chapter 4.
9	**Chapter 5 - "Mixing and Placing Concrete"**	This chapter does not apply.	Refer to ACI 318, Chapter 5.
10	**Chapter 6 - "Formwork, Embedded Pipes, and Construction Joints"**	With the exception of Sections 6.3.7(k) and 6.3.8, this chapter does not apply.	Refer to ACI 318, Chapter 6
11	**9.1.1.2 - "Severe Environmental Loads"** **9.1.1.3 - "Extreme Environmental Loads"**	These load definitions are not used in the design of the FuelSolutions™ W150 Storage Cask.	Load definitions from NUREG-1536 are used in the design of the FuelSolutions™ W150 Storage Cask.
12	**9.2 - "Required Strength:"** 9.2.1 - "The required strength *U* shall be at least equal to the greatest of the following: ... *(load combination no's. 1 - 11)*"	The FuelSolutions™ W150 Storage Cask design does not use load combinations from ACI 349.	The FuelSolutions™ W150 Storage Cask design uses load combinations from ANSI/ANS 57.9, as modified by NUREG-1536.
13	**Chapter 13 - "Two-Way Slab Systems"**	Not applicable.	
14	**Chapter 15 - "Footings"**	Not applicable.	
15	**16.2 - "Design:"** "16.2.1 - Design of precast members shall consider loading and restraint conditions from initial fabrication to completion of the structure, including form removal, storage, transportation, and erection."	The FuelSolutions™ W150 Storage Cask design does not explicitly address transportation loads on precast sections.	Off-normal operating condition transportation loads are assumed to be bounded by postulated accident condition side drop loads.
16	**Chapter 17 - "Composite Concrete Flexural Members"**	Not applicable.	
17	**Chapter 18 - "Prestressed Concrete"**	Not applicable.	

Table 2.6-1 - FuelSolutions™ W150 Storage Cask ACI Code Requirement Compliance Summary (6 Pages)

Item	ACI Requirement	Issue	Alternative Compliance Basis
18	**Chapter 19 - "Shells and Folded Plate Members"**	Not applicable.	
19	**Appendix A - "Thermal Considerations"**	A FuelSolutions™ W150 Storage Cask may be exposed to conditions (accident fire) not within the scope of ACI 349.	Short-term material temperature limits for accident fire are defined in this FuelSolutions™ Storage System FSAR.
20	**Appendix B - "Steel Embedments"**	Load combinations are only required to meet ACI 349 requirements.	Load combinations and variation requirements will meet both ACI 349 and ANSI/ANS 57.9.
21	**Appendix C - "Special Provisions for Impulsive ad Impactive Effects"**	Load combinations are only required to meet ACI 349 requirements.	Load combinations and variation requirements will meet both ACI 349 and ANSI/ANS 57.9.
ACI 318:			
22	**Chapter 1 - "General Requirements"**	With the exception of Section 1.3, this chapter does not apply.	Refer to ACI 349.
23	**Chapter 2 - "Definitions"**	This chapter does not apply.	Refer to ACI 349.
24	**Chapter 3 - "Materials"**	With the exception of Sections 3.1 and 3.7, this chapter does not apply.	See Item 7.
25	**Chapter 7 - "Details of Reinforcement"**	This chapter does not apply.	Refer to ACI 349.
26	**Chapter 8 - "Analysis and Design - General Considerations"**	This chapter does not apply.	Refer to ACI 349.
27	**Chapter 9 - "Strength and Serviceability Requirements"**	This chapter does not apply.	Refer to ACI 349.
28	**Chapter 10 - "Flexure and Axial Loads"**	This chapter does not apply.	Refer to ACI 349.

Table 2.6-1 - FuelSolutions™ W150 Storage Cask ACI Code Requirement Compliance Summary (6 Pages)

Item	ACI Requirement	Issue	Alternative Compliance Basis
29	**Chapter 11 - "Shear and Torsion"**	This chapter does not apply.	Refer to ACI 349.
30	**Chapter 12 - "Development and Splices of Reinforcement"**	This chapter does not apply.	Refer to ACI 349.
31	**Chapter 13 - "Two-Way Slab Systems"**	Not applicable.	
32	**Chapter 14 - "Walls"**	This chapter does not apply.	Refer to ACI 349.
33	**Chapter 15 - "Footings"**	Not applicable.	
34	**Chapter 16 - "Precast Concrete"**	This chapter does not apply.	Refer to ACI 349.
35	**Chapter 17 - "Composite Concrete Flexural Members"**	Not applicable.	
36	**Chapter 18 - "Prestressed Concrete"**	Not applicable.	
37	**Chapter 19 - "Shells and Folded Plate Members"**	Not applicable.	
38	**Chapter 20 - "Strength Evaluation of Existing Structures"**	Not applicable.	
39	**Chapter 21 - "Special Provisions for Seismic Design"**	Not applicable.	
40	**Chapter 22 - "Structural Plain Concrete"**	Not applicable.	
41	**Appendix A - "Alternate Design Method"**	This chapter does not apply.	Refer to ACI 349.

Table 2.6-1 - FuelSolutions™ W150 Storage Cask ACI Code Requirement Compliance Summary (6 Pages)

Item	ACI Requirement	Issue	Alternative Compliance Basis
42	**Appendix B - "Unified Design Provisions for Reinforced and Prestressed Concrete Flexural and Compression Members"**	This chapter does not apply.	Refer to ACI 349.
43	**Appendix C - "Alternative Loads and Strength Reduction Factors"**	This chapter does not apply.	Refer to ACI 349.

Table 2.6-2 - FuelSolutions™ W100 Transfer Cask ASME Code Requirement Compliance Summary (9 Pages)

Item	ASME Code Requirement	Issue	Alternative Compliance Basis
Section III, Subsection NCA:			
1	**General for Subsection NCA**	1. The terms "Certificate Holder" and "Owner" used throughout this subsection are not applicable for a 10CFR72 system. 2. The Division 2 (concrete) requirement provided throughout this subsection are not applicable for a 10CFR72 system.	1. Energy*Solutions* SFD bears the responsibilities associated with a "Certificate Holder" or "Owner" relative to the FuelSolutions™ SFMS. 2. This compliance summary table only addresses FuelSolutions™ W100 Transfer Casks, which do not contain any concrete.
2	**NCA-1140, "Use of Code Editions, Addenda, and Cases:"** "(a)(1) Under the rules of this Section, the Owner or his designees shall establish the Code Edition and Addenda to be included in the Design Specifications . . ."	The FuelSolutions™ SFMS documentation does not include an ASME Code Design Specification.	The requirements and criteria typically contained in an ASME Code Design Specification are contained in this FSAR.

Table 2.6-2 - FuelSolutions™ W100 Transfer Cask ASME Code Requirement Compliance Summary (9 Pages)

Item	ASME Code Requirement	Issue	Alternative Compliance Basis
3	**NCA-1210, "Components:"** "Each component of a nuclear power plant shall require a Design Specification (NCA-3250), Design Report (NCA-3350, NCA-3550), and other design documents specified in NCA-3800. Data Reports and stamping shall be as required in NCA-8000."	The FuelSolutions™ SFMS documentation does not contain the following ASME Code documents: 1. Design Specification, 2. Design Report, 3. Owner's Certificate of Authorization, 4. Authorized Inspection Agency written agreement, 5. Owner's Data Report, 6. Overpressure Protection Report.	1. See Item 2. 2. The information typically reported in an ASME Code Design Report is contained in this FSAR. 3. An Owner's Certificate of Authorization, a written agreement with an Authorized Inspection Agency, an Owner's Data Report, and an Overpressure Protection Report are not typically provided for components licensed under 10CFR72.
4	**NCA-1220, "Materials"**	Not all non-pressure retaining materials specified in the FuelSolutions™ W100 Transfer Cask FSAR are listed as ASME Code Section III materials.	FuelSolutions™ W100 Transfer Casks will be purchased, identified, controlled, and manufactured using a graded quality approach in accordance with the NRC-approved Energy*Solutions* SFD Quality Assurance Program based on NQA-1, NRC Regulatory Guide 7.10, and NUREG/CR-6407 criteria.
5	**NCA-1281, "Activities and Requirements:"** "… Data Reports and stamping shall be as required in NCA-8000."	See Item 19.	See Item 19.
6	**NCA-2000, "Classification of Components"**	The classification of components is usually provided in a Design Specification.	See Item 2.

Table 2.6-2 - FuelSolutions™ W100 Transfer Cask ASME Code Requirement Compliance Summary (9 Pages)

Item	ASME Code Requirement	Issue	Alternative Compliance Basis
7	**NCA-2142, "Establishment of Design, Service, and Test Loadings and Limits:"** "In the Design Specification, the Owner or his designee shall identify the loadings and combinations of loadings and establish the appropriate Design, Service, and Test Limits for each component or support . . ."	See Item 2.	See Item 2.
8	**NCA-3100, "General"**	ASME Code accreditation does not apply.	See Item 1.
9	**NCA-3200, "Owner's Responsibilities"**	An Owner's responsibilities under ASME Code do not apply.	An Owner's Certificate of Authorization, a Design Specification, a Design Report, an Overpressure Protection Report, and an Owner's Data Report are not typically provided for components licensed under 10CFR72.
10	**NCA-3300, "Responsibilities of a Designer - Division 2"**	See Item 1.	See Item 1.
11	**NCA-3400, "Responsibilities of an N Certificate Holder - Division 2"**	See Item 1.	See Item 1.
12	**NCA-3500, "Responsibilities of an N Certificate Holder - Division 1"**	See Item 1.	See Item 1. Design and fabrication requirements are provided in this FSAR and related procurement/fabrication drawings and specifications.
13	**NCA-3600, "Responsibilities of an NPT Certificate Holder"**	See Item 1.	See Item 12.

Table 2.6-2 - FuelSolutions™ W100 Transfer Cask ASME Code Requirement Compliance Summary (9 Pages)

Item	ASME Code Requirement	Issue	Alternative Compliance Basis
14	**NCA-3700, "Responsibilities of an NA Certificate Holder"**	See Item 1.	See Item 12.
15	**NCA-3800, "Metallic Material Organization's Quality System Program"**	Materials for a FuelSolutions™ W100 Transfer Cask may be purchased from suppliers that are not certified per the requirements of NCA-3800.	Material suppliers will be qualified per NCA-3800 or the NRC-approved Energy*Solutions* SFD Quality Assurance Program based on the requirements of NQA-1, NRC Regulatory Guide 7.10, and NUREG/CR-6407 criteria.
16	**NCA-3900, "Nonmetallic Material Manufacturer's and Constituent Suppliers Quality System Programs"**	See Item 1.	See Item 1.
17	**NCA-4000, "Quality Assurance"**	These quality assurance requirements do not apply.	See Item 4.
18	**NCA-5000, "Authorized Inspection"**	The manufacturing or operation of the FuelSolutions™ SFMS will not use an Authorized Inspection Agency.	An Authorized Inspection Agency is not typically used in the manufacturing or operation of components licensed under 10CFR72.
19	**NCA-8000, "Certificates of Authorization, Nameplates, Code Symbol Stamping, and Data Reports"**	The FuelSolutions™ SFMS will not use an ASME Code Certificate of Authorization, Code Symbol Stamping, or a Data Report.	An ASME Code Certificate of Authorization, Code Symbol Stamping, or a Data Report are not typically required for components licensed under 10CFR72. Nameplate information will be provided on each FuelSolutions™ W100 Transfer Cask.

Table 2.6-2 - FuelSolutions™ W100 Transfer Cask ASME Code Requirement Compliance Summary (9 Pages)

Item	ASME Code Requirement	Issue	Alternative Compliance Basis
Section III, Subsection NF:			
20	**NF-1111.1, "Design Requirements:"** "In addition to the requirements of NCA-3240, the Owner shall be responsible that loads . . . are adequately transferred without loss of the pressure boundary integrity for the Design or Service Loadings specified in the Design Specification governing the component or piping."	The FuelSolutions™ SFMS documentation does not contain an ASME Code Design Specification.	The requirements and criteria typically contained in an ASME Code Design Specification are contained in this FuelSolutions™ Storage System FSAR.
21	**NF-1130, "Boundaries of Jurisdiction"**	See Item 6.	See Item 6.
22	**NF-2121, "Permitted Material Specifications:"** ". . . (b) The requirements of this Article do not apply to such as gaskets, seals, . . . Requirements, if any, for these materials shall be stated in the Design Specification (NCA-3850)."	See Item 2.	See Item 2.
23	**NF-2130, "Certification of Material:"** "(a) Material used in construction of component supports shall be certified. Certified Material Test Reports in accordance with NCA-3867.4 shall be provided."	See Item 15.	See Item 15. When CMTRs are required by the Energy*Solutions* SFD Quality Assurance Program, they will be provided per the requirements of NCA-3862.

Table 2.6-2 - FuelSolutions™ W100 Transfer Cask ASME Code Requirement Compliance Summary (9 Pages)

Item	ASME Code Requirement	Issue	Alternative Compliance Basis
24	**NF-2160, "Deterioration of Material In Service:"** "It is the responsibility of the Owner to select material suitable for the conditions stated in the Design Specifications (NCA-3250), with specific attention being given to the effects of Service Conditions upon the properties of the material."	See Item 6.	See Item 6.
25	**NF-2310, "Material to be Impact Tested"**	See Item 6.	See Item 6.
26	**NF-2610, "Documentation and Maintenance of Quality System Programs:"** "(a)Except as provided in (b) below, Material Manufacturers and Material Suppliers shall have a Quality System Program or an Identification and Verification Program, as applicable, which meets the requirements of NCA-3800. . . ."	See Item 15.	See Item 15.
27	**NF-3112.1, "Design Temperature"**	The FuelSolutions™ W100 Transfer Cask may be exposed to conditions (accident fire) not within the scope of the ASME Code.	Short-term material temperature limits for accident fire are defined in this FuelSolutions™ Storage System FSAR.
28	**NF-3113, "Service Conditions:"** "Each service condition to which the piping or component may be subjected shall be categorized in accordance with NCA-2142.2 and Service Limits [NCA-2142.4(b)] designated in the Design Specifications in such detail as will provide a complete basis for design in accordance with this Article."	See Item 6.	See Item 6.

Table 2.6-2 - FuelSolutions™ W100 Transfer Cask ASME Code Requirement Compliance Summary (9 Pages)

Item	ASME Code Requirement	Issue	Alternative Compliance Basis
29	**NF-3132, "Stress Analysis:"** "A detailed stress analysis or Design Report, as required by NCA-3550 for all piping or component supports, shall be prepared in sufficient detail to show that each of the stress limits of NF-3200 or NF-3300 is satisfied when the piping component support is subjected to the loadings of NF-3110."	See Item 3.	See Item 3.
30	**NF-3220, "Design by Analysis for Class 1"**	See Item 3.	See Item 3.
31	**NF-3226.1, "Permissible Types of Welded Joints in Plate- and Shell-Type Supports:"** (This section presents permissible weld configurations for butt, corner, and tee joints.)	The inner liner and outer structural shell do not employ 360° circumferential butt weld joints in their attachments to the top and bottom flanges of the cask.	The inner liner and outer structural shell employ modified 360° circumferential "corner joint" welds in their attachments to the top and bottom flanges of the transfer cask. as shown in this FuelSolutions™ Storage System FSAR.
32	**NF-4121, "Means of Certification:"** "The Certificate Holder for an item shall certify, by application of the appropriate Code Symbol and completion of the appropriate Data Report in accordance with NCA-8000, that materials used comply with the requirements of NB-2000 and that the fabrication or installation complies with the requirements of NF-4000."	The FuelSolutions™ SFMS will not use an ASME Code Symbol Stamp or a Data Report.	An ASME Code Symbol Stamping or Data Report are not typically required for components licensed under 10CFR72. Also see Item 15.
33	**NF-4213, "Qualification of Forming Processes for Impact Property Requirements"**	See Item 2.	See Item 2.

Table 2.6-2 - FuelSolutions™ W100 Transfer Cask ASME Code Requirement Compliance Summary (9 Pages)

Item	ASME Code Requirement	Issue	Alternative Compliance Basis
34	**NF-4724, "Bolt Tension:"** "All high strength structural bolts shall be preloaded to a value not less than that given in the Design Specification . . ."	See Item 2.	See Item 2.
35	**"Testing"**	1. Though not a Subsection NF requirement, the FuelSolutions™ W100 Transfer Cask fuel and neutron shield cavities will be hydrostatically tested to determine their leak tightness. 2. Though not a Subsection NF requirement, the FuelSolutions™ W100 Transfer Cask trunnions will be load tested per ANSI N14.6 requirements.	1. The FuelSolutions™ W100 Transfer Cask fuel and neutron shield cavity hydrostatic test pressures are presented in this FuelSolutions™ Storage System FSAR. 2. The FuelSolutions™ W100 Transfer Cask trunnion test load magnitude is presented in this FuelSolutions™ Storage System FSAR.
36	**"Overpressure Protection"**	Though not a Subsection NF requirement, the FuelSolutions™ W100 Transfer Cask neutron shield will employ a pressure relief device. The use of this device will not be documented in an ASME Code Overpressure Protection Report.	The FuelSolutions™ W100 Transfer Cask neutron shield pressure relief device set pressure is presented in this FuelSolutions™ Storage System FSAR.

Table 2.6-2 - FuelSolutions™ W100 Transfer Cask ASME Code Requirement Compliance Summary (9 Pages)

Item	ASME Code Requirement	Issue	Alternative Compliance Basis
37	**NF-8000, "Nameplates, Stamping, and Reports"**	The FuelSolutions™ SFMS will not use ASME Code Symbol Stamping, or a Data Report.	ASME Code Symbol Stamping or a Data Report are not typically required for components licensed under 10CFR72. Nameplate information will be provided on the FuelSolutions™ W100 Transfer Cask.

2.6.3 Evaluation of Credibility of Non-Mechanistic Storage Cask Tip-over Accident

The evaluation of the FuelSolutions™ W150 Storage Cask to demonstrate a tip-over of a loaded storage cask onto the ISFSI pad during storage conditions is not a credible event is provided in this section.

2.6.3.1 Evaluation Basis

2.6.3.1.1 Background

Historically, the design basis for a dry storage cask such as the FuelSolutions™ W150 Storage Cask and a FuelSolutions™ canister has been to demonstrate by analysis a tip-over of the cask when subjected to worst case structural loadings cannot occur. Nevertheless, the storage cask was required to be designed and analyzed for a postulated non-mechanistic tip-over accident of the cask onto the ISFSI pad during storage conditions. In addition, it was required that an instantaneous radiological release from a non-mechanistic breach of the cask confinement boundary be assumed and the resulting doses shown to meet regulatory limits.

Subsequently, the NRC has issued Interim Staff Guidance (ISG) in advance of a revision to NUREG-1536 related to the consideration of accidents resulting from non-mechanistic failures. Specifically, ISG-3[32] stipulates that the design basis should focus on the identification and evaluation of all credible accidents affecting public health and safety, and that non-credible accidents such as non-mechanistic failures of the confinement boundary should be eliminated from the design basis. ISG-5 provides a revised design basis for evaluation of the confinement boundary consistent with this philosophy which is discussed further in Chapter 7 of this FSAR.

Thus, the design basis for consideration of credible and non-credible tip-over accidents of the FuelSolutions™ W150 Storage Cask and a FuelSolutions™ canister is consistent with ISG-3. Specifically, the design basis for the storage cask and canister is:

1. A tip-over of the storage cask while secured to the J-skid during upending or downending operations as discussed in Sections 1.2.1.4.2 and 1.2.2.3 of this FSAR is considered a credible event and, therefore, is included in the design basis.
2. A tip-over of the storage cask onto the ISFSI pad during storage conditions is not considered a credible event and, therefore, is not included in the design basis.

The evaluation of the storage cask for the first condition is provided in Section 3.7.4 of this FSAR. The justification for the second condition is provided in the paragraphs which follow.

[32] NRC Memorandum from Director of Spent Fuel Projects Office, NMSS, *Issuance of Interim Staff Guidance*, dated September 28, 1998.

2.6.3.1.2 Reference Criteria

To facilitate a systematic evaluation founded on previously accepted regulatory principles, the methodology contained in NUREG-1407[33] is used as a basis to demonstrate that a tip-over of the FuelSolutions™ W150 Storage cask and a FuelSolutions™ canister is not a credible event. The NUREG-1407 methodology which utilizes a risk-based approach is widely used to perform Individual Plant Examination of External Events (IPEEEs) for beyond-design basis severe accidents in nuclear power plants (NPPs). The application of NUREG-1407 criteria and methodology to the storage cask tip-over evaluation requires that the following conditions be satisfied:

1. Deterministic Evaluation: Show that adequate safety margins against tip-over exist for all design basis external events. For this evaluation a minimum factor of safety of 1.1 against tip-over is used consistent with the criteria specified in Table 3-1 of NUREG-1536 for "overturning and sliding - accident conditions."
2. Probabilistic Evaluation: Show that the probability of occurrence of a beyond-design basis external event which could lead to tip-over is acceptably low. NUREG-1407 and other related regulatory documents provide guidance on establishing an acceptable probability of exceedance for a range of external events.
3. Consequences Evaluation: Show that the radiological consequences of a beyond-design basis event to the public meets the 10CFR72.106(b) dose limits of 5 rem to any individual located on or beyond the nearest boundary of the controlled area.

By satisfying the above criteria, it can be concluded that tip-over of the storage cask onto the ISFSI pad during storage conditions is not a credible event.

2.6.3.1.3 External Events

The external events evaluated to demonstrate that tip-over of the storage cask onto the ISFSI pad during storage conditions is not credible include:

1. Earthquake: The design basis seismic loads for the FuelSolutions™ W150 Storage Cask are defined in Section 2.3.4.4 of this FSAR. The design basis earthquake has a peak ground acceleration (PGA) which bounds all reactor sites east of the Rocky Mountain Front (east of approximately 104° west longitude), as defined in 10CFR72.102(a)(2). Section 3.2.2 of NUREG-1407 defines the "review level" earthquake and the corresponding PGA for all commercial reactor sites excluding the California coastal sites (San Onofre, Diablo Canyon and Humboldt Bay). The PGA for the review level earthquake bounds that of the design basis earthquake and that for all reactor sites east of the Rocky Mountain Front. The more conservative bounding NUREG-1407 earthquake loadings are used to demonstrate that tip-over of the storage cask onto the ISFSI pad due to a seismic event is not credible.
2. Tornado Wind and Missiles: The design basis tornado wind and missile loads for the FuelSolutions™ W150 Storage Cask are defined in Section 2.3.4.2 of this FSAR. The design basis tornado loadings which are the maximum values defined by Regulatory Guide 1.76 and

[33] NUREG-1407, *Procedural and Submittal Guidance for the Individual Plant Examination of External Events* (IPEEE) for Severe Accident Vulnerabilities, July 1991.

NUREG-0800 bound those for all commercial reactor sites. Therefore, the design basis tornado loadings are used to demonstrate that tip-over of the storage cask onto the ISFSI pad due to a tornado event is not credible.

3. Flooding: The design basis flooding loads for the FuelSolutions™ W150 Storage Cask are defined in Section 2.3.4.1 of this FSAR. The design basis flooding loads are in accordance with Reg. Guide 1.59 and bound those for all commercial reactor sites exclusive of any extraordinary site specific conditions. Therefore, the design basis flooding loads are used to demonstrate that tip-over of the storage cask onto the ISFSI pad due to a flooding event is not credible, with a confirmatory evaluation of site specific conditions to be performed by the licensee.
4. Pad Differential Settlement: This condition includes a vertical differential settlement of the ISFSI pad supporting the FuelSolutions™ W150 Storage Cask due to soil instability, liquefaction erosion or scouring. The worst case vertical settlement is assumed to occur directly under the storage cask causing the storage cask to pivot or tip to one side. The bounding pad differential settlement which causes incipient tipping of the storage is determined. The requirements for design and construction of the ISFSI pad are defined which assure that significant differential settlement of the pad does not occur.

There are no credible internal events that could lead to a tip-over of the storage cask on the ISFSI pad during storage. The storage cask is a passive component with no mechanical parts which could fail or lead to a tip-over. The storage cask is a robust massive structure which is highly resistant to degradation of a nature that could lead to tip-over. Therefore, internal events are not considered further.

Other site-specific conditions or external events will be addressed on a site-specific basis, as applicable. Each licensee is required to perform a 10CFR72.212 evaluation to assure that no site-specific conditions exist that are not bounded by or whose effects are equivalent to those defined herein.

2.6.3.2 Deterministic Evaluation

This section documents the evaluation of the external events defined in Section 2.6.3.1.3 to demonstrate that a factor of safety of at least 1.1 against overturning of the FuelSolutions™ W150 Storage Cask onto the ISFSI pad during storage conditions exists, thus satisfying the first criterion of Section 2.6.3.1.2.

2.6.3.2.1 Deterministic Evaluation for Earthquake

An analysis of the FuelSolutions™ W150 Storage Cask is performed to determine the factor of safety against tip-over for a bounding earthquake as discussed in the paragraphs which follow.

2.6.3.2.1.1 Analysis Methodology

The overturning stability analysis of the storage cask for the design basis seismic loads defined as having a PGA of 0.25g's in both horizontal directions and a PGA of 0.25g's in the vertical direction is documented in Section 3.7.10 of this FSAR. A conservative static moment equilibrium analysis is performed which demonstrates that the factor of safety against storage

cask overturning due to this design basis seismic loading is 1.22 which exceeds the minimum acceptable value of 1.1.

For the purpose of this evaluation, a higher magnitude earthquake with a PGA of 0.50 g's is evaluated to bound all commercial reactor sites but the California coastal plants in accordance with Tables 3.1 and 3.2 of NUREG-1407. Free field ground motion time histories are developed for each direction (two horizontal and one vertical which is 2/3 of horizontal) whose response spectra envelope the Reg. Guide 1.60 response spectra. These synthetic time histories are statistically independent of each other and have a power spectral density which is in accordance with Section 3.7.1 of NUREG-0800. A damping value of 5.0% critical damping is used in accordance with Reg. Guides 1.61[34] and 1.165.[35]

The FuelSolutions™ Storage Cask is a free-standing reinforced concrete and steel cylindrical shaped component. The FuelSolutions canister containing spent fuel assemblies is contained within the cavity of the storage cask. The ISFSI pad which support the loaded storage cask is a relatively thick heavily reinforced concrete slab. Since the storage cask is not anchored to ISFSI pad, lateral earthquake loadings accelerate the mass of storage cask and cause a rocking motion of the storage cask with respect to the ISFSI pad. The weight of the storage cask less the vertical component of the earthquake acceleration imposes a restoring moment which resists overturning of the storage cask.

Since the storage cask is not anchored to the ISFSI pad, friction forces develop between the storage cask and pad to resist sliding of the storage cask. The higher the coefficient of friction, the greater the propensity for tipping. The coefficient of static friction for dry concrete on concrete is about 0.6 per ACI 349, Section 11.7.4.3. The static and dynamic coefficients of friction between the cask and the concrete pad are conservatively taken to be 0.8 in the analysis.

The free-field, earthquake acceleration time histories are applied directly to a rigid representation of the pad in the two horizontal and the vertical directions simultaneously. Thus it is assumed that the presence of the storage cask and pad do not appreciably alter the ground motion and that there is no amplification of motion at the top of the pad associated with pad flexibility. Soil-structure interaction affects are neglected since the ISFSI site is well characterized and the sub-grade is sufficiently prepared to alleviate soft deposits or soft media which may cause amplification as discussed in Section 2.6.3.5.

The storage cask seismic tip-over analysis is performed using the heaviest storage cask and canister having highest center of gravity location above the base of the storage cask. A storage cask weight of 251 kips and a bounding canister weight of 84 kips with a combined weight of 335 kips are used. The combined center of gravity is located 118 inches above the base of the storage cask.

---

[34] Regulatory Guide 1.61, *Damping Values for Seismic Design of Nuclear Power Plants*, U.S. Nuclear Regulatory Commission, October 1973.

[35] Regulatory Guide 1.165, *Identification and Characterization of Seismic Sources and Determination of Safe Shutdown Earthquake Ground Motion*, Revision 0, U.S. Nuclear Regulatory Commission, March 1997.

Tip-over of the storage cask is considered to occur if the vertical projection of the cask CG falls outside the vertical projection of the base of the cask. It can be shown by geometry that this criterion is met when a vector along the longitudinal axis of the cask forms an angle greater than 30 degrees with a vertical vector. This angle is derived based on a CG height of 118 inches and a cylinder radius of 68 inches which accounts for the chamfer at the base of the storage cask, i.e., α = arctan (68/118) = 30 degrees.

2.6.3.2.1.2 Analysis Results

Since the storage cask is a free standing structure which is not anchored to the ISFSI pad, the rocking motion and lift-off of the storage cask is a non-linear behavior when subjected to the above bounding earthquake time histories. Accordingly a non-linear direct integration time history analysis of the storage cask and ISFSI pad is performed using LS-DYNA.[36] LS-DYNA is the commercially available version of the DYNA3D program. The program is well suited for large displacement, nonlinear dynamic problems of this type.

The storage cask seismic tip-over analysis is performed using a finite element model which includes the storage cask/canister assembly and a portion of the ISFSI pad. The underlying soil is not included in the model since free field seismic time histories are applied. The 360 degree finite element model shown in Figure 2.6-1. The finite element model includes a total of 2609 nodes and 2060 brick element. The non-linear interface between the storage cask and the pad are modeled using a symmetric contact surface which transfers compressive and friction forces but which allows uplift.

The storage cask/canister assembly is modeled as a homogeneous, elastic cylinder with elastic concrete properties of E=4000 ksi and Poisson's ratio = 0.17. Further, the storage cask/canister assembly is idealized as a solid cylinder whose material density is slightly larger above the center of gravity (CG) than it is below the so as to give the correct total mass (235 k) and CG location (118 inches). The storage cask diameter is conservatively assumed to be 2 inches smaller than the actual diameter to account for the chamfer at the base of the cask, thus effectively reducing the size of the storage cask "footprint" from 138 inches to 136 inches. The length of the storage cask/canister assembly modeled is 230 inches. Vertical direction body forces producing a constant 1.0 g gravity load are applied to the model. In the absence of seismic loads, these body forces produce a pad contact force equal to the weight of the cask/canister assembly.

The ISFSI reinforced concrete pad is modeled using a rigid material and solid brick elements. Time-varying X, Y, and Z-direction body forces which produce the aforementioned free field seismic accelerations are applied to the pad. The density of the pad material is artificially increased by approximately 4 orders of magnitude such that the effect of the cask/canister assembly on the motion of the pad is negligible. The storage cask is assumed to be initially at rest with its weight supported by the ISFSI pad. The seismic time-history analysis is carried out to 20 seconds, beyond the time that the peak response has occurred.

---

[36] Livermore Software Technology Corporation, *LS-DYNA User's Manual (Nonlinear Dynamic Analysis of Structures in Three Dimensions)*, Version 940, Livermore, CA, June 1997.

An analysis with a peak horizontal ground accelerations of 0.50*g* applied in two orthogonal horizontal directions and 2/3 (0.50*g*) applied in the vertical direction is performed for the bounding earthquake. Additional analyses at progressively higher peak horizontal ground accelerations (0.7*g*, 0.8*g*) are made to determine the level of earthquake which causes the storage cask to tip-over. In each of these analyses, the peak vertical ground acceleration is taken as two-thirds of the peak horizontal ground acceleration.

The seismic analyses of the storage cask show that cask rocks but does not tip-over when subjected to bounding earthquakes with peak ground accelerations of 0.50*g* and 0.70*g*. The analysis shows that tip-over of the storage cask does occur for a 0.8*g* bounding earthquake. Plots of the finite element model illustrating the rocking of the storage cask due to a 0.70*g* earthquake and tip-over of the cask due to a 0.80*g* earthquake are shown in Figure 2.6-2 and Figure 2.6-3, respectively. A time history of the angle between the longitudinal axis of the storage cask and the vertical is shown in Figure 2.6-4. The results demonstrate that the factor of safety against tip-over due to an earthquake with a peak ground acceleration of 0.5*g* is at least 0.7/0.5 = 1.4 but less than 0.8/0.5 = 1.6, which meets the acceptance criteria of 1.1 with sufficient margin. Therefore, tip-over of the storage cask onto the ISFSI pad during storage conditions due to an earthquake with a PGA of 0.50*g*'s, which bounds all commercial reactor sites but the California coastal plants, does not occur.

2.6.3.2.2 Deterministic Evaluation for Tornado Wind and Missiles

The overturning stability analysis of the storage cask for the design basis tornado wind and missile loads is documented in Section 3.7.10 of this FSAR. The pressure load due to a 360 mph wind velocity is applied concurrently with the bounding massive missile load which is a 4,000 pound automobile impacting the top end of the storage cask. The resulting analysis demonstrates that the factor of safety against storage cask overturning due to design basis tornado wind and missile loadings is 2.05 which exceeds the minimum acceptable value of 1.1 by a wide margin. Therefore the storage cask is stable with adequate safety margins for a bounding tornado event.

2.6.3.2.3 Deterministic Evaluation for Flooding

The overturning stability analysis of the storage cask for the design basis flood is documented in Section 3.7.8 of this FSAR which conservatively assumes that the flood depth is equal to or greater than the height of the storage cask. The pressure due to a 21 fps water velocity is applied to the projected area of the storage cask. The resulting analysis demonstrates that the factor of safety against storage cask overturning due to flood water loading is 2.3 which exceeds the minimum acceptable value of 1.1 by a wide margin. Therefore the storage cask is stable with adequate safety margins for a design basis flooding event. Site specific conditions such as upstream dams, and current local rainfall intensity records should be evaluated by the licensee to confirm that the effects of the resulting flood water velocities and the corresponding flood depth are bounded by those evaluated in this FSAR.

2.6.3.2.4 Deterministic Evaluation for ISFSI Pad Differential Settlement

The overturning stability analysis of the storage cask for a worse case differential settlement of the ISFSI pad which is assumed to occur directly under the storage cask causing the storage cask to pivot or tip to one side is documented in Section 3.7.8 of this FSAR. The resulting analysis demonstrates that to maintain a factor of safety of at least 1.1 against storage cask overturning, a pad differential settlement of 2.5 feet across the radius of the cask adjacent to the storage cask vertical centerline (center of gravity) or 5.1 feet across the storage cask diameter is required. Differential settlements of this magnitude are not credible since the maximum settlement of reinforced concrete mat foundations of this type particularly on sites in which the subgrade is well characterized and prepared, and which are not subject to soil instability, soil liquefaction, erosion or scouring are much less than 50 to 80 mm (2 to 3 inches).[37] Therefore the storage cask is stable with adequate safety margins for a worst-case differential settlement event. The requirements for the ISFSI pad design and construction to assure that differential settlements are minimized are provided in Section 2.6.3.5.

2.6.3.3 Probabilistic Evaluation

This section documents the evaluation of the external events defined in Section 2.6.3.1.3 to demonstrate that the probability of occurrence of an event which exceeds the design basis conditions for the FuelSolutions™ W150 Storage Cask delineated in Section 2.3.4 of this FSAR which could lead to a tip-over onto the ISFSI pad during storage conditions are acceptably low, thus satisfying the second criterion of Section 2.6.3.1.2.

2.6.3.3.1 Probabilistic Seismic Evaluation

The methodology for performing a probabilistic seismic hazard analysis (PSHA) for commercial reactor sites is contained in Reg. Guide 1.165. Appendix B of Reg. Guide 1.165 establishes a mean annual probability of exceedance of 1×10^{-5} (or inversely a return period of 1 in 100,000 years) as the acceptance basis applicable to NPPs at all reactor sites. In addition, Appendix B of Reg. Guide 1.165 permits the use of a higher probability of exceedance which considers the relative risk posed by a structure or system to the public. An ISFSI storing spent fuel in dry storage casks and canisters is inherently less hazardous and less vulnerable to earthquake-initiated accidents than is an operating NPP and hence posses less risk to the public. Thus a higher annual mean probability of exceedance of 1×10^{-4} (or inversely a return period of 1 in 10,000 years) corresponding to a lower magnitude earthquake is appropriate for ISFSIs and dry storage casks. Recent licensing actions which take this risk-based consideration into account have shown that a mean annual probability of exceedance of 5×10^{-4} (or inversely a return period of 1 in 2,000 years) is acceptable.[38]

---

[37] Bowles, J.E., *Foundation Analysis and Design*, Section 10-4, "Mat Settlements," McGraw Hill Book Company, 1982.

[38] Letter from Charles J. Haughney, U.S.N.R.C. to J.M. Wilcynski, U.S.D.O.E., *Request for Exemption to 10CFR72.102(f)(1) Seismic Design Requirement for Three Mile Island Unit 2 Independent Spent Fuel Storage Installation (TAC No. L22283)*, May 1998.

NUREG-1488[39] presents the results of a PSHA which establishes the mean annual probability of exceedance for a range of earthquake magnitudes for all commercial reactor sites east of the Rock Mountain Front. Appendix A of NUREG-1488 shows that for the design basis earthquake with a PGA approximately of 0.25 g's (250cm/sec^2=0.26 g's), the mean annual probability of exceedance is less than 1 x 10^{-4} for the vast majority of reactor sites east of the Rocky Mountain Front. As discussed in Section 2.6.3.2.1, for the purpose of this evaluation to demonstrate that tip-over of the storage cask onto the ISFSI pad during storage conditions is not credible, a higher magnitude earthquake with a PGA of 0.50 g's is evaluated which bounds the design basis earthquake with a PGA of 0.25 g's. Appendix A of NUREG-1488 shows that for an earthquake with a PGA of approximately 0.50 g's (500 cm/sec^2=0.51g's), the mean annual probability of exceedance is less than 1 x 10^{-4} for all reactor sites east of the Rocky Mountain Front.

While site specific mean annual probabilities exceedance are not reported in NUREG-1488 for reactor sites west of the Rocky Mountain Front, it is reasonable to assume and consistent with the criteria of Section 3.2.2 of NUREG-1407 which specifies a "review level" earthquake with a bounding PGA of 0.50 g's, that the mean annual probability of exceedance is in the range of 1 x 10^{-4} but not greater than 5 x 10^{-4} for all western reactor sites except the California coastal sites (San Onofre, Diablo Canyon and Humboldt Bay). This includes the Trojan, Washington Nuclear, Rancho Seco and Palo Verde reactor sites. The licensees for these western plants should confirm that the PGA for their site does not exceed 0.50g for an annual probability of exceedance of 1 x 10^{-4}.

Therefore, on the basis of the above evaluation it can be concluded that the probability of earthquake of sufficient magnitude to cause the storage cask to tip-over onto the ISFSI pad during storage conditions is acceptably low with the noted exception.

2.6.3.3.2 Tornado Wind and Missiles Probabilistic Evaluation

The storage cask is designed and analyzed for a the maximum tornado wind and missile loads specified by Reg. Guide 1.76 and NUREG-0800 which bound all reactor sites, as discussed in Section 2.3.4.2 of this FSAR. NUREG-1407 states that the annual probability of exceedance for NPPs designed in accordance with this criteria is 1 x 10^{-7}. Therefore, it can be concluded that the probability of a tornado with wind speeds and missile impacts of sufficient magnitude to cause the storage cask to tip-over onto the ISFSI pad during storage conditions is acceptably low.

2.6.3.3.3 Flooding Probabilistic Evaluation

The storage cask is designed and analyzed for a design basis flood consistent with Reg. Guide 1.59 which bound all reactor sites, as discussed in Section 2.3.4.1 of this FSAR. NUREG-1407 states that the annual probability of exceedance for NPPs designed in accordance with Regulatory Guide 1.59 criteria is less than 1 x 10^{-5}, excluding floods due to upstream dam failures and updated site specific probable maximum precipitation (PMP) evaluations which project higher rainfall intensities over shorter time intervals and smaller areas than may have previously been considered.

---

[39] NUREG-1488, *Revised Livermore Seismic Hazard Estimates for Sixty-Nine Nuclear Power Plant Sites East of the Rocky Mountains,* Nuclear Regulatory Commission, April 1994.

In addition, NUREG-1407 establishes that the conditional core damage frequency for a design basis flood for a NPP is less that 1×10^{-1} which gives a combined annual probability of exceedance of less than 1×10^{-6}. There is no parallel "canister breach frequency" established for dry storage systems, however the following factors would act to reduce the probability of a canister breach and a release due to a beyond-design basis flood:

1. For a significant release to occur, a substantial portion of the fuel cladding must be ruptured and the inner and outer canister cover plate seal welds or canister shell must fail.
2. During a postulated tip-over of the storage cask due to flooding, the storage cask must displace the water in its path. The resulting buoyancy and drag forces would act to mitigate the impact loadings on the storage cask.
3. The velocity required to tip-over the storage cask is inversely proportional to the flood depth up to the height of the storage cask. Thus for flood depths lower than the storage cask height (approximately 19 feet), a proportionately higher water velocity is required to tip-over the storage cask.

While a canister breach frequency has not been established, it is judged that the combined annual probability of exceedance for a design basis flood which would lead to a tip-over of the storage cask and a canister breach is less than 1×10^{-6}. Therefore, it can be concluded that the probability of a flood with water velocities of sufficient magnitude to cause the storage cask to tip-over onto the ISFSI pad during storage conditions is acceptably low, subject to confirmation by the licensee that site specific conditions are bounded by those evaluated in this FSAR.

2.6.3.3.4 ISFSI Pad Differential Settlement Probabilistic Evaluation

The storage cask is stable with a sufficient safety margin for a differential settlement of the ISFSI pad of up to 2.5 feet which is assumed to occur directly under the storage cask causing the storage cask to pivot or tip to one side is described in Section 2.6.3.2.4. Worst case differential settlements of reinforced concrete mat foundations of this type particularly on sites in which the subgrade is well characterized and prepared and which are not subject to soil instability, soil liquefaction, erosion or scouring are at least an order of magnitude less than this value. While an annual probability of exceedance for an ISFSI pad differential settlement of this magnitude occurring directly under a storage cask has not been established, it is assuredly less than 1×10^{-6}. Therefore, it can be concluded that the probability of a differential settlement of the ISFSI pad of sufficient magnitude to cause the storage cask to tip-over onto the ISFSI pad during storage conditions is acceptably low, subject to confirmation by the licensee that site specific conditions which could lead to soil instability, soil liquefaction, erosion or scouring are considered as discussed in Section 2.6.3.5.

2.6.3.4 Evaluation of Radiological Consequences

This section documents the evaluation of the consequences of an event which exceeds the design basis conditions for the FuelSolutions™ W150 Storage Cask delineated in Section 2.3.4 of this FSAR which could lead to a radiological release. The evaluation shows that 10CFR72.106(b) dose limits of 5 rem to any individual located on or beyond the nearest boundary of the controlled area are met, thus satisfying the third criterion of Section 2.6.3.1.2.

2.6.3.4.1 Evaluation Basis

The design basis evaluation of the FuelSolutions™ canister confinement boundary in accordance with the ISG-5 methodology is documented in Chapter 7 of this FSAR and Chapter 7 of each FuelSolutions™ canister storage FSAR. The design basis analysis precludes a non-mechanistic breach of the canister shell in accordance with ISG-5 and assumes a maximum leak rate based on the maximum leak rate verified by test during canister closure operations. For the purpose of this evaluation to demonstrate that a tip-over of the storage cask onto the ISFSI pad during storage conditions is not credible, a beyond-design basis non-mechanistic breach of the canister confinement boundary and radiological release is conservatively postulated. Since the purpose of this evaluation differs from that of the design basis evaluation of the confinement boundary documented in Chapter 7, conservative but realistic assumptions of fission products and release fractions which differ from the design basis confinement boundary evaluation are used for this worst case risk based evaluation of consequences.

2.6.3.4.2 Confinement Boundary Design

Confinement of all radioactive materials in the FuelSolutions™ Storage System is provided by the FuelSolutions™ canister as described in Chapter 7 of each FuelSolutions™ canister storage FSAR. The design of the canister confinement boundary is described in Section 7.1 of each FuelSolutions™ canister storage FSAR.

2.6.3.4.3 Confinement Boundary Breach

For the purpose of this evaluation, the consequences of a non-mechanistic postulated ground level breach of a FuelSolutions™ canister confinement boundary are evaluated. This breach is conservatively assumed to result in the instantaneous release of gaseous fission products and airborne CRUD particulates. A bounding canister accident pressure of 70.0 psig is assumed as an initial condition for this evaluation. This accident pressure is based on the conservative assumption that 100% of the design basis fuel rods fail, and that 30% of the fission gas and 100% of the fill gas is released from each failed rod under the worst case temperature and backfill pressure conditions. The resulting Total Effective Dose Equivalent (TEDE) and thyroid doses at downstream distances of 100 to 1000 meters are evaluated. The ISFSI controlled area boundary must be at least 100 meters from the nearest loaded FuelSolutions™ W150 Storage Cask, in accordance with 10CFR72.106(b). The doses at these various distances are compared to the regulatory limit of 5 rem to the whole body or any organ, per 10CFR72.106(b).

2.6.3.4.4 Fission Products

The quantity of fission products in the SNF assemblies for the respective canister designs is obtained for each fuel assembly type, cooling time, burnup, and enrichment combination from the ORIGEN2 data libraries discussed in Section 5.2.2 of this FSAR. Since the fission products available from SNF include the same principal radionuclides and vary only in quantity depending on the irradiation history and post-irradiation cooling time, the fission products considered are addressed generically here.

2.6.3.4.4.1 Fuel Fission Gases, Volatiles, and Particulates

The available spent fuel isotopes that are considered include the noble gases and halogens, as well as the radionuclides listed in Table VI 3-1 of WASH-1400.[40] The list of radionuclides considered also includes those fission products identified in Appendix D of the MACCS User's Guide,[41] and any additional radionuclides identified in Table 7.1 of NUREG-1536. This list of radionuclides is reduced to remove those with insignificant activity following a three-year post-irradiation cooling time. The resulting list of principal radionuclides available in the SNF assembly fuel rods is presented in Table 2.6-3.

The total fission product inventory for the radionuclides listed in Table 2.6-3 is based on the total calculated concentrations for the fuel assembly class/type with the highest initial heavy metal content. This conservatively bounds all fuel assembly classes and types qualified for storage in a FuelSolutions™ canister. Using the DOE OCRWM database,[42] the PWR fuel assembly type with the highest initial heavy metal content is 0.4645 MTU for the B&W 15x15 Mark B fuel assembly. Similarly, the BWR fuel assembly type with the highest initial heavy metal content is 0.197 MTU for the GE 7x7 Type 2B fuel assembly. All burnup/enrichment combinations from the fuel cooling tables in Section 5.2 of this FSAR are evaluated to determine the worst case contents of the important radionuclides. The worst case radionuclides occur for the case of 60 GWd/MTU and 5.5 w/o initial enrichment, with a four-year cooling time.

2.6.3.4.4.2 CRUD Radionuclides

The major radionuclide particulate present in the CRUD layer and available for aerosol entrainment and release is Co-60. The inventory of Co-60 in the CRUD layer is conservatively estimated using the data from SAND88-1358,[43] which provides the Co-60 activity at the time of fuel discharge.

For PWR fuel assemblies, a conservative Co-60 curie loading of 140 $\mu ci/cm^2$ is used. For BWR fuel assemblies a conservative Co-60 curie loading of 600 $\mu ci/cm^2$ is used. This activity is decayed to account for four years post-irradiation cooling time, consistent with the worst-case fuel assembly discussed above. The resulting curie content is 82.7 $\mu ci/cm^2$ for PWR fuel and 354 $\mu ci/cm^2$ for BWR fuel. Using PWR and BWR fuel assembly information from the DOE OCRWM database, the worst case fuel assembly surface area is calculated and applied to the curie loading, to determine the bounding Co-60 inventory for the SNF assembly classes to be stored. The resulting total activity for the bounding PWR assembly is about 37 curies per

---

[40] WASH-1400, *Reactor Safety Study: An Assessment of Accident Risks in U.S. Commercial Nuclear Power Plants,* Appendix VI, "Calculation of Reactor Accident Consequences (Draft)," United States Atomic Energy Commission, August 1974.

[41] NUREG/CR-4691, MELCOR Accident Consequence Code System (MACCS) - User's Guide, Volume 1, U.S. Nuclear Regulatory Commission, February 1990.

[42] RW-0184, *Fuel Assembly Data*, Department of Energy, Office of Civilian Radioactive Waste Management (OCRWM).

[43] SAND88-1358, *Estimate of CRUD Contribution to Shipping Cask Containment Requirements*, Sandia National Laboratories, January 1991.

assembly. Similarly, the resulting total activity for the bounding BWR assembly is about 73 curies per assembly.

2.6.3.4.5 Release of Contents

2.6.3.4.5.1 Fraction Available for Release

During a hypothetical canister breach, most of the gaseous, volatile, and particulate radionuclides are retained in the fuel pellets. Most of the CRUD remains fixed to the fuel cladding surfaces. Table 2.6-4 lists the fractions of the total radionuclide inventory available for release from the fuel rods into the canister internal free volume and the associated basis. H-3 is conservatively assumed to have the same fraction available for release from the fuel rods as Kr-85.

The amount of CRUD available for release is determined by the amount of CRUD that spalls from the fuel assemblies. Since the transport of the canister from the plant's fuel building to the ISFSI is similar to, although likely to be less severe than, the conditions of normal off-site transportation, the normal transportation CRUD spalling fraction of 15% from SAND88-1358 is conservatively used, as reported in Table 2.6-5.

2.6.3.4.5.2 Release Fraction

The release fraction is that portion of the total radionuclide inventory that is released from the fuel to the atmosphere (i.e., outside the canister). The available radionuclide inventory in the canister that is releasable is a function of the characteristics of the radionuclide under consideration. The characteristics considered, including the radionuclide form to which the characteristic applies, are as follows:

- *CRUD Settling:* Since there is no credible mechanism for resuspension of CRUD or other particulates released from the fuel assemblies, the evaluation of Appendix II of SAND88-1358 is applied for dry storage conditions. A bounding value of 0.004 is used, which bounds the vertical accident cases considered in the Sandia report.
- *Aerosolization:* Applicable to particulates, aerosolization includes the effects of particle size on its ability to be released, as discussed in SAND80-2124.[44] Since this characteristic is breach dependent and therefore mechanistic, it is conservatively ignored for this evaluation.
- *Respirable Size:* The effect of CRUD on total dose is also a function of the fraction of the released particles that are of a respirable size. SAND80-2124 indicates that particles larger than 10 microns in size are not respirable, and that significant portions of the CRUD particles may be of such a size. However, current data on CRUD particle size distribution shows that most particles are of a respirable size. Therefore, any reduction for this characteristic is conservatively neglected for this evaluation.

[44] SAND80-2124, *Transportation-Accident Scenarios for Commercial Spent Fuel*, Sandia National Laboratories, February 1981.

- *Deposition:* Gravitational and dry deposition processes act to reduce particulate concentrations in a plume as it travels from the canister to the site-controlled area boundary. The reductions may be significant over the 100 meter minimum controlled area boundary; however, the fallout rates are sensitive to particle size. Since this requires a detailed assessment of the particle size distribution (which is somewhat dependent on the breach characteristics), this characteristic is also conservatively neglected in the release fraction determination.
- *Settling/Plate-Out/Filtration:* As stated in SAND80-2124, volatiles and particulates released from the fuel to a gaseous cask atmosphere are likely to settle, plate-out on the canister walls, or plate-out/filter-out in the escape passage prior to release due to the postulated breach. A value of 0.05 is used, which is consistent with the Sandia report. This factor is assumed to be included in the CRUD settling factor discussed above. For the noble gases, which includes Kr-85, this value is 0.6.

The resulting release fractions for the radionuclides considered are reported in Table 2.6-5.

2.6.3.4.5.3 Atmospheric Dispersion

The fission products (gases, suspended volatiles, and particulates) are conservatively assumed to instantaneously disperse in the atmosphere after escaping from the FuelSolutions™ canister. These fission products could ultimately reach downwind locations of interest and result in a hypothetical incremental dose. Regulatory Guide 1.25[45] is conservatively used to determine the atmospheric dispersion factors (χ/Q) for various downwind distances. These factors are presented in Table 2.6-6.

2.6.3.4.5.4 Dose Conversion Factors

Doses for each radionuclide considered are based on the effective dose equivalent method. Exposure to dose conversion factors for all radionuclides are obtained from Federal Guidance Report No. 11.[46] Doses are calculated for the effects of inhalation and submersion for the whole body, thyroid, and lungs, and for submersion for the skin. The exposure to dose conversion factors for the radionuclides considered in this postulated accident evaluation are summarized in Table 2.6-7.

---

[45] Regulatory Guide 1.25 (Safety Guide 25), *Assumptions Used for Evaluating the Potential Radiological Consequences of a Fuel Handling Accident in the Fuel Handling and Storage Facility for Boiling and Pressurized Water Reactors*, U.S. Nuclear Regulatory Commission, March 1972.

[46] Federal Guidance Report No. 11, *Limiting Values of Radionuclide Intake and Air Concentration and Dose Conversion Factors for Inhalation, Submersion, and Ingestion*, U.S. Environmental Protection Agency, Report No. DE89-011065, 1988.

2.6.3.4.6 Determination of Doses

The following relationship, used to calculate the doses for inhalation, is based on the guidelines of Regulatory Guide 1.25 and Regulatory Guide 1.109.[47]

$$\text{Immersion Dose} = \sum_i (I_i)(RF_i)(BR)(\chi / Q)(DCF_i), rem$$

Where:

I_i	=	system inventory of radionuclide *i*, μCi
RF_i	=	release fraction of radionuclide *i*
BR	=	breathing rate, m^3/sec
χ/Q	=	atmospheric dispersion factor, sec/m^3
DCF_i	=	Dose conversion factor for radionuclide *i*, rem/μCi

The inhalation doses are based on an adult breathing rate of 2.54×10^{-4} m^3/sec, as specified in Regulatory Guide 1.109.

Similarly, the formula used to calculate doses for submersion is:

$$\text{Submersion Dose} = \sum_i (I_i)(RF_i)(\chi / Q)(DRCF_i), rem$$

Where:

$DRCF_i$ = Dose rate conversion factor for radionuclide *i*, rem-m^3/μCi-sec

2.6.3.4.7 Dose Results Comparisons

As can be seen from Figure 2.6-5, for PWR fuel the dose rates for this non-mechanistic canister breach at the regulatory minimum site boundary distance of 100 meters are less than the accident limit of 5 rem specified in 10CFR72.106(b) for the whole body or any organ. Thus, the minimum site boundary distance required for storage of PWR fuel in a FuelSolutions™ canister to comply with 10CFR72.106(b) for this non-mechanistic postulated accident is 100 meters.

As can be seen from Figure 2.6-6, for BWR fuel the dose rates for this non-mechanistic canister breach at the regulatory minimum site boundary distance of 100 meters slightly exceed the accident limit of 5 rem specified in 10CFR72.106(b) for the whole body or any organ. Thus, the minimum site boundary distance required for storage of BWR fuel in a FuelSolutions™ canister to comply with 10CFR72.106(b) for this non-mechanistic postulated accident is 110 meters.

It can therefore be concluded that the consequences of an event which exceeds the design basis conditions for the FuelSolutions™ W150 Storage Cask delineated in Section 2.3.4 of this FSAR which could lead to a radiological release meet the applicable regulatory dose limits. Thus the third criterion of Section 2.6.3.1.2 is satisfied.

---

[47] Regulatory Guide 1.109, *Calculation of Annual Doses to Man from Routine Releases of Reactor Effluents for the Purpose of Evaluating Compliance with 10 CFR Part 50, Appendix I*, Revision 1, U.S. Nuclear Regulatory Commission, October 1977.

2.6.3.5 ISFSI Pad Requirements

The ISFSI pad for the FuelSolutions™ Storage System is classified as not important to safety. To assure that failures of the ISFSI pad resulting in large differential settlements do not occur, the minimum design and construction requirements for the ISFSI pad are defined in the paragraphs which follow.

2.6.3.5.1 Site Characterization

A sufficient number of soil borings are required to a sufficient depth to assure that the ISFSI site subsurface conditions are well characterized. Laboratory testing of soil samples are required to determine the soil classification, the physical properties of the soil and the requirements for the subgrade preparation. The required soil properties to be verified by site investigation include:

1. Average allowable static soil bearing capacity	Greater than or equal to 2,000 pounds per square foot over the footprint of the ISFSI pad at its excavation depth
2. Average Elastic Modulus	Less than or equal to 30,000 pounds per square inch
3. Variability	Soil should not have extreme variations in subgrade stiffness over the footprint of the ISFSI pad
4. Shear Wave Velocity	Greater than or equal to 1,000 ft/sec based on low strain best estimate soil properties
5. Liquefaction potential	None permitted. Liquefaction is a phenomena that is generally described as the deformation of a soil mass caused by the disturbance of saturated cohesionless soils in an undrained condition. Liquefaction is usually associated with the settlement or lateral spreading of saturated, relatively loose, clean sands during an earthquake event.

The ISFSI site should be thoroughly investigated to assure that there are no subgrade features which would lead to a soil failure due to instability, settlement or erosion. Buried structures and piping systems should be evaluated for their potential to cause the ISFSI pad subgrade to deteriorate in the event of a failure or collapse. The ISFSI site subgrade should be prepared in accordance with the soils engineer's recommendations including any excavation, dewatering, surcharging, densification or placement of engineered fill.

2.6.3.5.2 Concrete Pad

The reinforced concrete pad for the ISFSI is to be designed and constructed in accordance with ACI 318. The cement should conform to ASTM C150. Both fine and course aggregates should conform to ASTM C33. The concrete slump should be tested in accordance with ASTM C143. The 28-day compressive strength of the concrete should be 3,000 psi tested in accordance with ASTM C39. The reinforcing steel should have a minimum yield strength of 60,000 psi and conform to ASTM A615.

The grade of the ISFSI concrete pad should be established to promote effective drainage. The surrounding ISFSI site should be graded to promote effective drainage and minimize soil erosion due to run-off and scouring due to flooding.

2.6.3.6 Summary

The deterministic evaluation documented in Section 2.6.3.2 shows that adequate safety margins against tip-over of the storage cask onto the ISFSI pad during storage conditions exist for all design basis external events. The probabilistic evaluation documented in Section 2.6.3.3 shows that the probability of exceeding an external event, i.e., the probability that a beyond design basis event could occur, which could lead to a storage cask tip-over is acceptably low. The evaluation documented in Section 2.6.3.4 shows that the radiological consequences of a beyond design basis event to the public meets the dose limits of 10CFR72.106(b). Based on these evaluations, the provisions of NUREG-1407 are satisfied. It is therefore concluded that tip-over of the storage cask onto the ISFSI pad during storage conditions is not a credible event.

Table 2.6-3 - Radionuclides Considered in Atmospheric Release Calculations

Radionuclide	
H-3	Te 129
Kr-85	Te-129M
Rb-86	I-129
Sr-89	Cs-134
Sr-90	Cs-136
Y-90	Cs-137
Y-91	Ba-140
Zr-95	La-140
Nb-95	Ce-141
Ru-103	Pr-143
Ru-106	Ce-144
Te-127	Nd-147
Te-127M	Co-60

Table 2.6-4 - Radionuclide Fractions Released from Fuel Assemblies into Canister

Radionuclide	Rod Release Fraction	Reference
H-3	0.30	Section 2.6.3.4.4
Kr-85	0.30	45
I-129	0.10	45
Co-60	0.15	43
All other radionuclides listed in Table 2.6-3	2.0×10^{-6}	44

Table 2.6-5 - Radionuclide Release Fractions from Canister into Atmosphere

Radionuclide	Factor		Release Fraction
	CRUD Settling	Settlement/ Plate-Out/Filtration	
H-3	--	0.05	1.5×10^{-2}
Kr-85	--	0.6	1.8×10^{-1}
I-129	--	0.05	5.0×10^{-3}
Co-60	0.004	--	6.0×10^{-4}
All other radionuclides listed in Table 2.6-3	--	0.05	1.0×10^{-7}

Table 2.6-6 - Atmospheric Dispersion Factors

Distance, m	χ/Q, sec/m^3 (45)
100	3.46×10^{-2}
110	2.65×10^{-2}
120	2.23×10^{-2}
130	1.77×10^{-2}
150	1.30×10^{-2}
200	9.95×10^{-3}
300	4.65×10^{-3}
500	1.94×10^{-3}
800	9.65×10^{-4}
1000	6.44×10^{-4}

Table 2.6-7 - Exposure-to-Dose and Exposure-to-Dose-Rate Conversion Factors

Radionuclide	Whole Body	Thyroid	CEDE	Units
Inhalation DCF				
H-3	--	6.40×10^{-5}	6.40×10^{-5}	Rem/μCi
Rb-86	--	4.92×10^{-3}	6.63×10^{-3}	Rem/μCi
Sr-89	--	1.54×10^{-3}	4.14×10^{-2}	Rem/μCi
Sr-90	--	9.77×10^{-3}	1.30×10^{0}	Rem/μCi
Y-90	--	3.52×10^{-5}	8.44×10^{-3}	Rem/μCi
Y-91	--	4.07×10^{-4}	4.89×10^{-2}	Rem/μCi
Zr-95	--	5.33×10^{-3}	2.37×10^{-2}	Rem/μCi
Nb-95	--	1.32×10^{-3}	5.81×10^{-3}	Rem/μCi
Ru-103	--	2.21×10^{-3}	8.95×10^{-3}	Rem/μCi
Ru-106	--	5.07×10^{-2}	4.77×10^{-1}	Rem/μCi
Te-127	--	2.39×10^{-5}	3.18×10^{-4}	Rem/μCi
Te-127M	--	8.84×10^{-4}	2.15×10^{-2}	Rem/μCi
Te 129	--	6.03×10^{-6}	9.00×10^{-5}	Rem/μCi
Te-129M	--	1.46×10^{-3}	2.39×10^{-2}	Rem/μCi
I-129	--	5.77×10^{0}	1.74×10^{-1}	Rem/μCi
Cs-134	--	4.11×10^{-2}	4.62×10^{-2}	Rem/μCi
CS-136	--	6.40×10^{-3}	7.33×10^{-3}	Rem/μCi
Cs-137	--	2.93×10^{-2}	3.19×10^{-2}	Rem/μCi
Ba-140	--	9.47×10^{-4}	3.74×10^{-3}	Rem/μCi
La-140	--	4.51×10^{-4}	4.85×10^{-3}	Rem/μCi
Ce-141	--	1.71×10^{-4}	8.95×10^{-3}	Rem/μCi
Pr-143	--	6.22×10^{-12}	8.10×10^{-3}	Rem/μCi
Ce-144	--	6.96×10^{-3}	3.74×10^{-1}	Rem/μCi
Nd-147	--	7.18×10^{-5}	6.85×10^{-3}	Rem/μCi
Co-60	--	5.99×10^{-2}	2.19×10^{-1}	Rem/μCi
Submersion DRCF				
H-3	1.22×10^{-12}	--	--	rem-m^3/μCi-sec
Kr-85	4.83×10^{-10}	2.57×10^{-10}	--	rem-m^3/μCi-sec

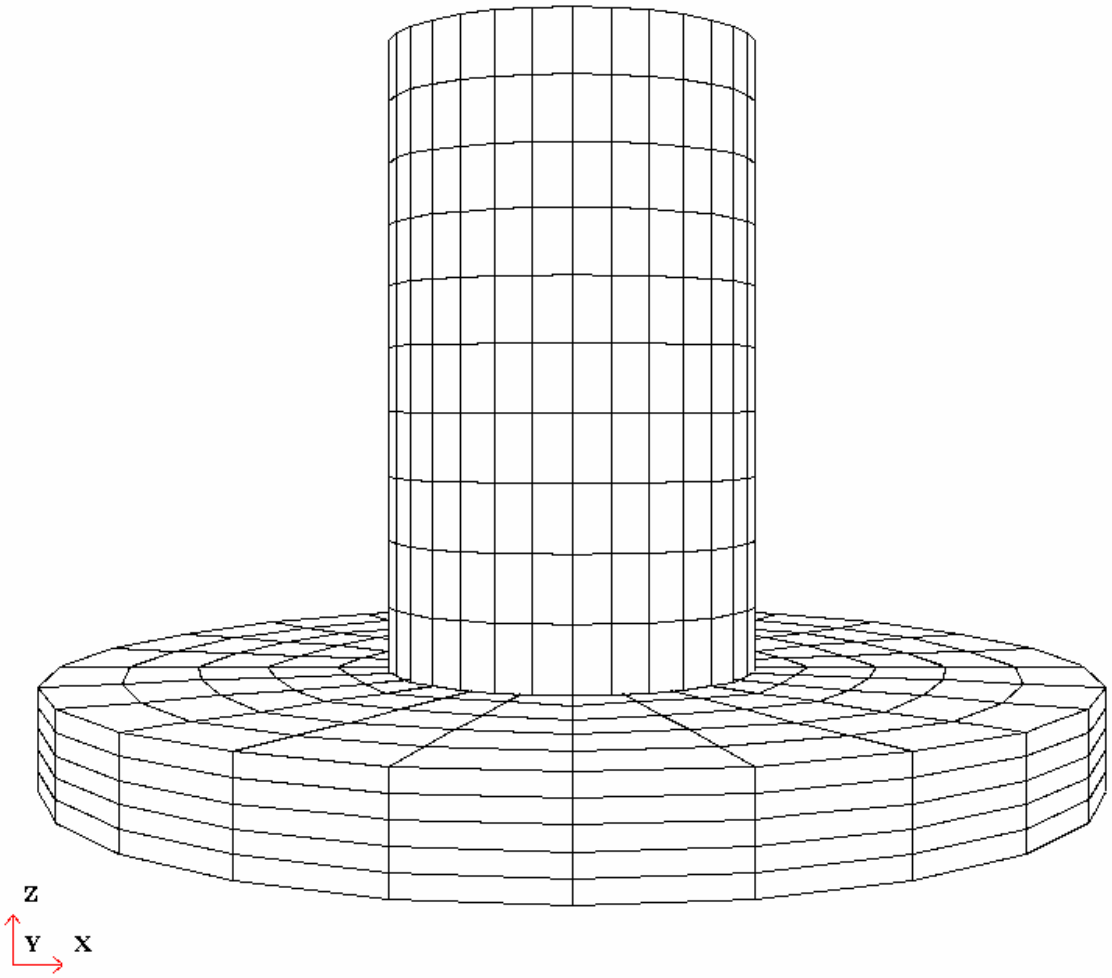

Figure 2.6-1 - Storage Cask Seismic Tip-Over Analysis LS-DYNA Finite Element Model

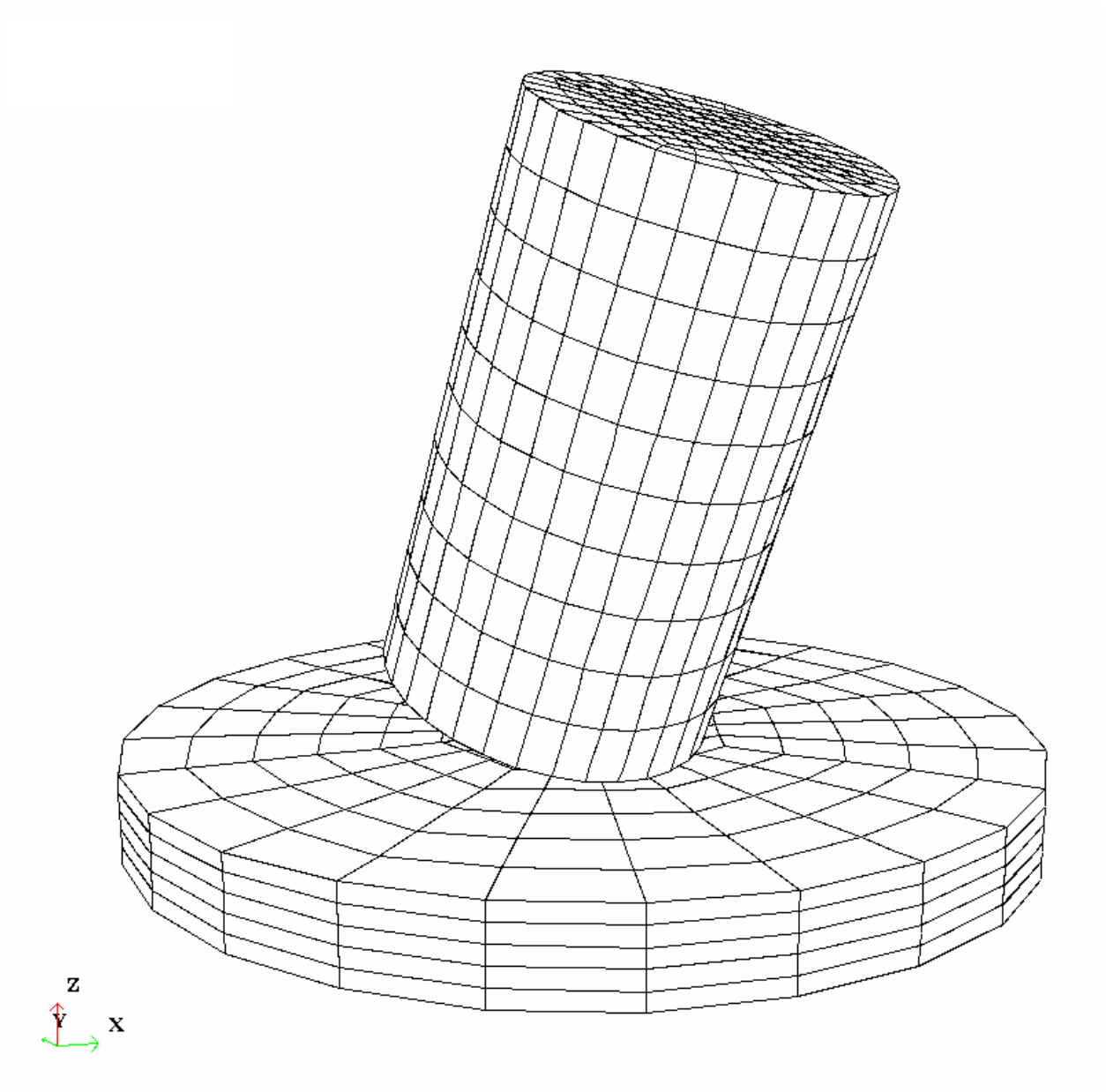

Figure 2.6-2 - Rocking of Storage Cask for 0.70*g* PGA Earthquake

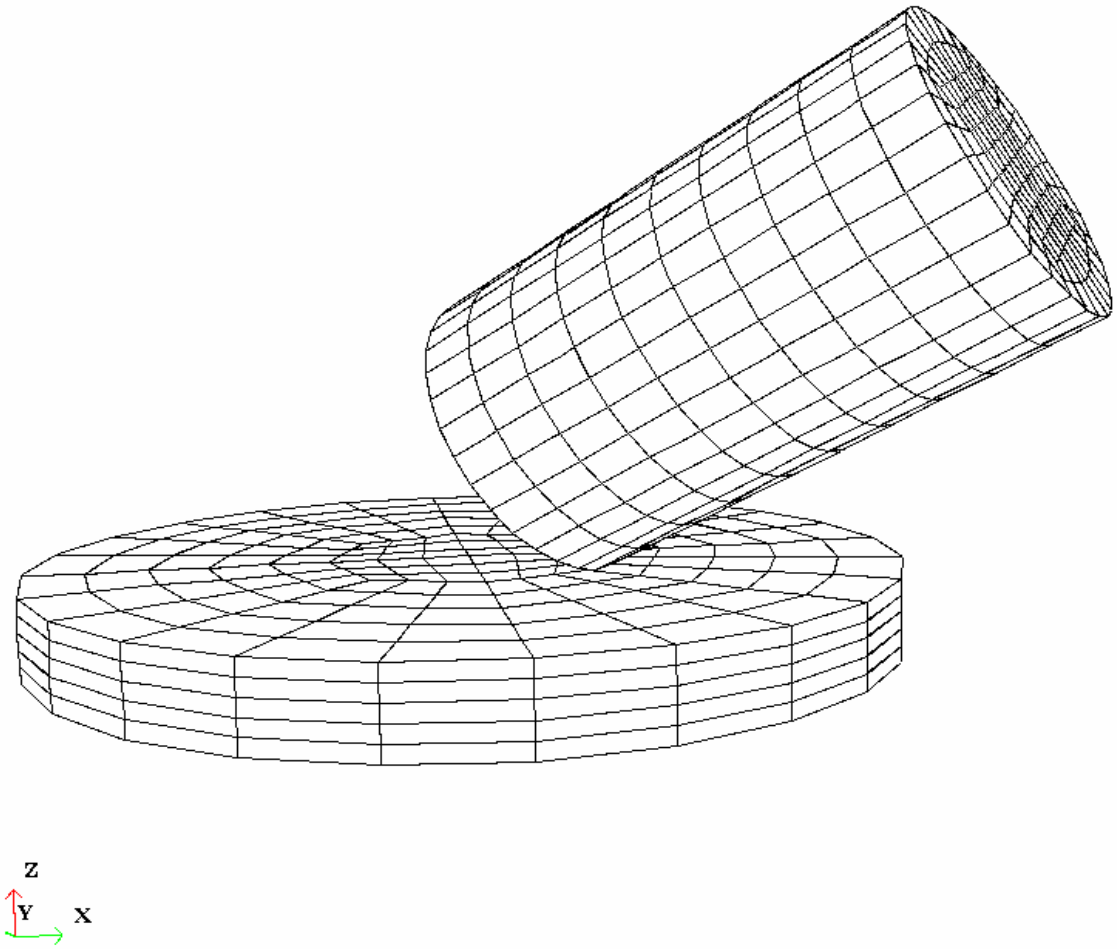

Figure 2.6-3 - Rocking of Storage Cask for 0.80*g* PGA Earthquake

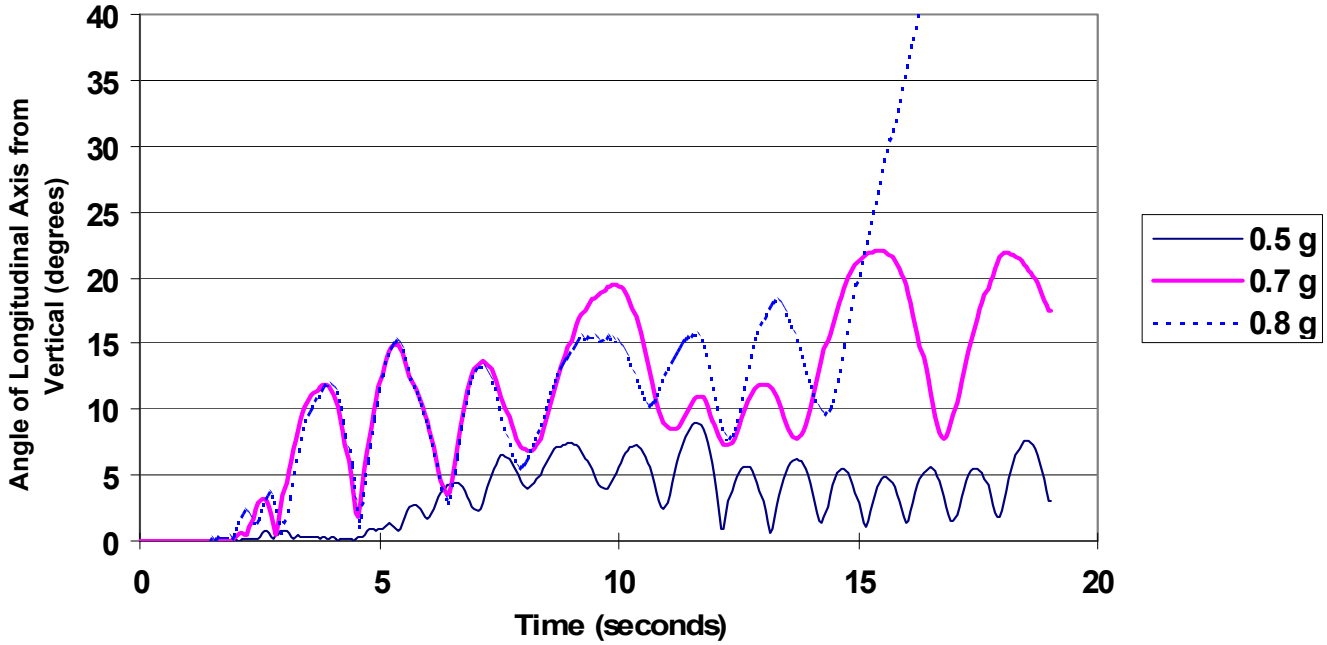

Figure 2.6-4 - Storage Cask Angular Rotation Time Histories for Bounding Earthquakes

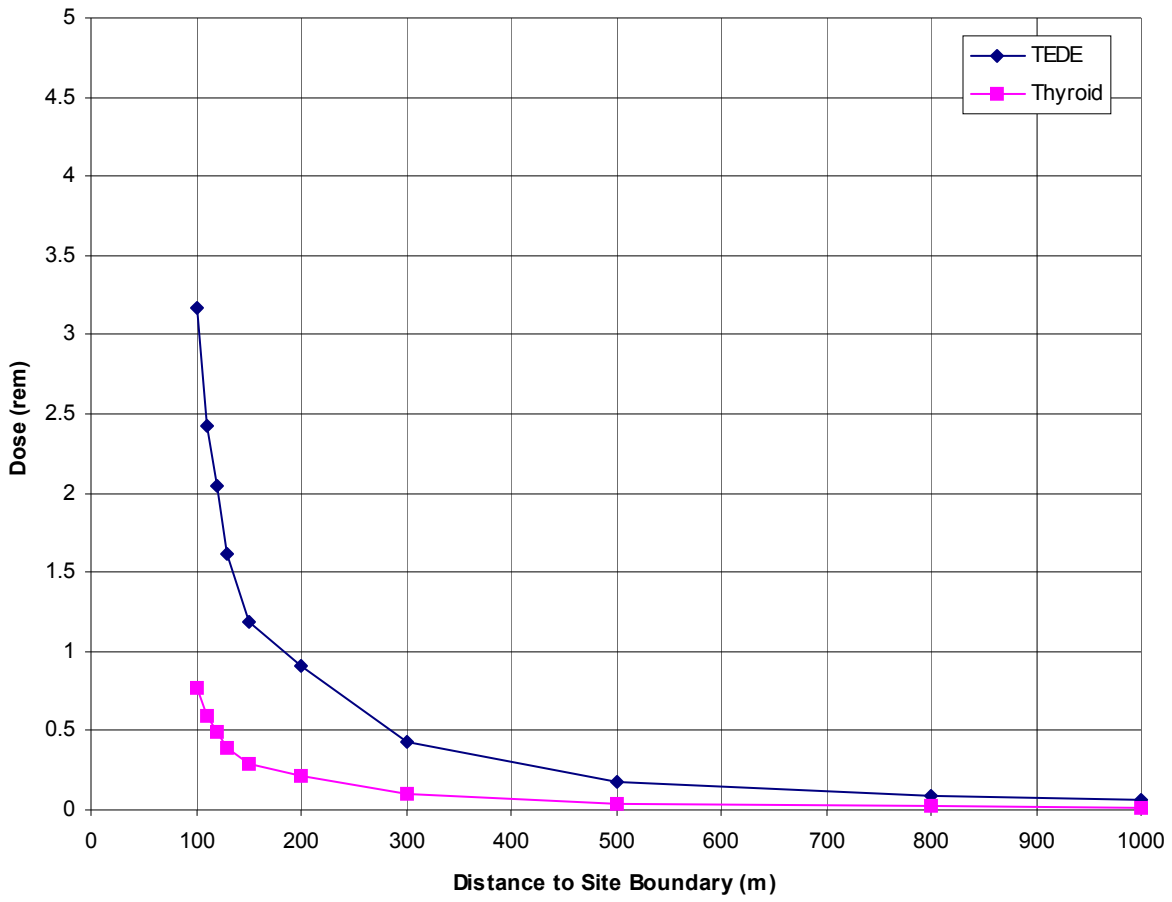

Figure 2.6-5 - Postulated Breached FuelSolutions™ PWR Canister Dose at the Site Boundary

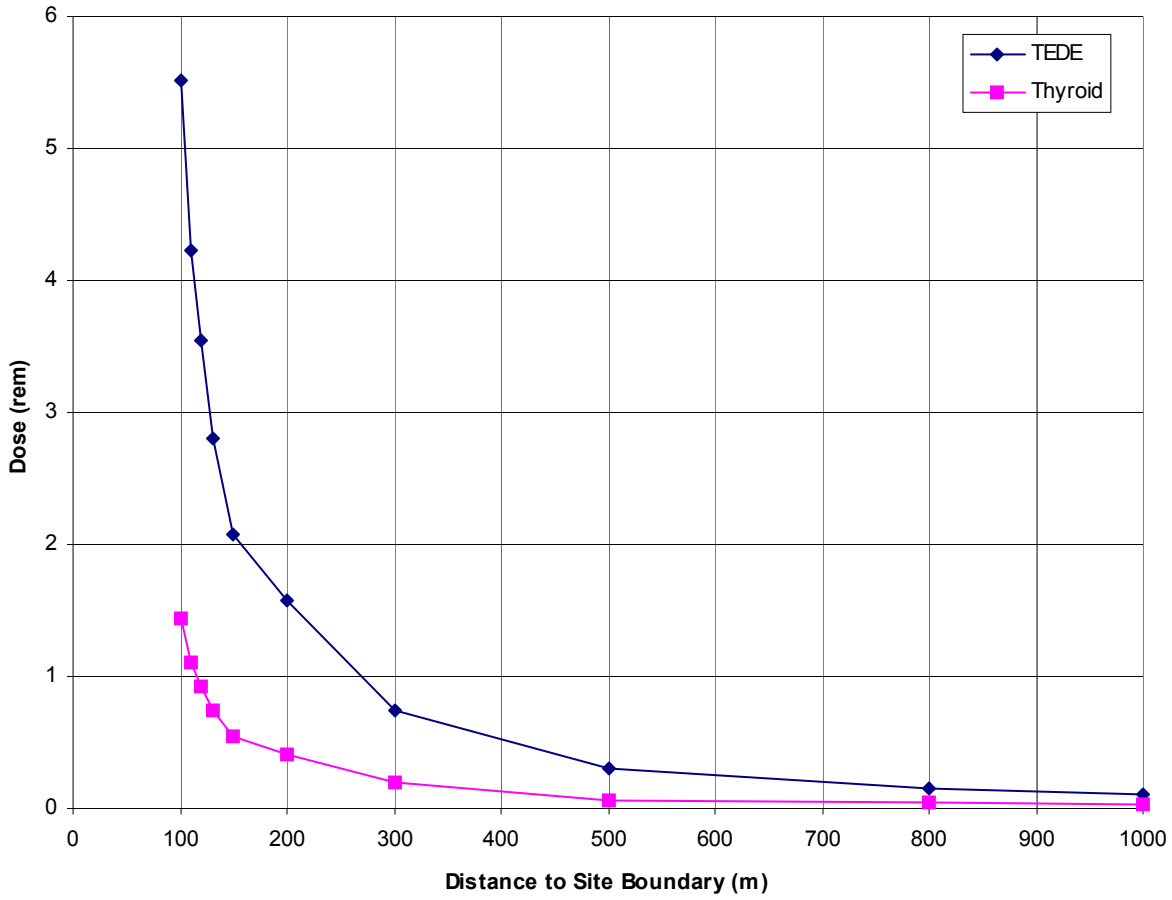

Figure 2.6-6 - Postulated Breached FuelSolutions™ BWR Canister Dose at the Site Boundary

This page intentionally left blank.

3. STRUCTURAL EVALUATION

This chapter presents the structural evaluation of the FuelSolutions™ W150 Storage Cask and W100 Transfer Cask for normal operating, off-normal, and accident conditions. The results of this evaluation demonstrate that the FuelSolutions™ Storage System components provide adequate structural protection for the contained FuelSolutions™ canister and the spent nuclear fuel under all design basis loadings as defined in Chapter 2 of this FSAR and in accordance with the requirements of 10CFR72.[1]

The structural evaluations of the FuelSolutions™ W150 Storage Cask and W100 Transfer Cask are performed using a combination of classical closed form solutions (hand calculations) and finite element analyses. The finite element analyses are performed using ANSYS[2] and LS-DYNA,[3] general purpose finite element codes widely used in the nuclear industry. The elements and features of these codes used in the structural analysis are limited to those well tested and proven to provide accurate results when properly used. Where possible, the solutions from the finite element analysis are compared to closed-form solutions to further validate the results.

The FuelSolutions™ W150 Storage Cask and W100 Transfer Cask are evaluated for the design basis loads which are based on the maximum FuelSolutions™ Storage System temperatures and the worst case weights and dimensions of the FuelSolutions™ components, including the heaviest canister. Each FuelSolutions™ canister, in turn, is evaluated and shown to meet the design basis parameter value for the FuelSolutions™ W150 and W100 Transfer Cask, hereafter referred to as the storage cask and transfer cask. The structural evaluation for each FuelSolutions™ canister is contained in the respective FuelSolutions™ canister storage FSAR.

Load combination evaluations of the storage cask and transfer cask for all storage and transfer conditions are presented in Sections 3.5.3, 3.6.5, and 3.7.11. The methods of combining loads are discussed in those sections.

---

[1] Title 10, Code of Federal Regulations Part 72 (10CFR72), *Licensing Requirements for the Independent Storage of Spent Nuclear Fuel and High Level Radioactive Waste*, 1995.

[2] ANSYS Inc., *ANSYS Finite Element Program*, Versions 5.3 and 5.4, Houston, PA.

[3] Livermore Software Technology Corporation, *LS-DYNA (Nonlinear Dynamic Analysis of Structures in Three Dimensions)*, Version 940, Livermore, CA.

This page intentionally left blank.

3.1 Structural Design

3.1.1 Discussion

The FuelSolutions™ Storage System consists of three principal structural components: 1) the storage cask, 2) the transfer cask, and 3) the canister. A complete description of these components is provided in Section 1.2.1 with the drawings provided in Section 1.5.1 of this FSAR. The principal structural design features of the storage cask and transfer cask are described in the following sections. The design of each FuelSolutions™ canister is described further in the respective FuelSolutions™ canister storage FSARs.

3.1.1.1 Storage Cask

The principal features of the FuelSolutions™ storage cask design are described in Section 1.2.1.1 and shown in Figure 1.2-2. The primary functions of the storage cask are to provide radiation shielding, passive convective cooling, physical protection, and support for the loaded canister during dry storage in all normal, off-normal, and postulated accident conditions. The structural design conditions are defined in Section 2.3 and include off-normal and accident loads resulting from storage cask handling and canister transfer operations (such as cask misalignment during horizontal transfer, accidental drop, or cask tip-over) and natural phenomena (such as air flow blockage, snow and ice, tornado wind and missiles, earthquake, flood, and fire).

The FuelSolutions™ storage cask consists of the body of the storage cask and a top cover assembly. The body of the storage cask is a segmented right circular cylinder with a thick wall section and a bottom end slab. The three precast reinforced concrete segments which comprise the storage cask body are all similar in construction. Each segment is formed with mating shear keys to provide positive engagement between segments. The bottom end segment includes an integral bottom slab with formed air inlet vents. Two middle segment length options are used which differ by 10 inches for the short and long storage cask versions. The top end segment includes formed air outlet vents and an integral annulus shielding ring which also serves as the bolting flange for the top cover. Reinforcing steel is provided at all surfaces of each concrete segment in two perpendicular directions. In addition, the interior of the storage cask body, including the cylindrical portion and cask bottom end, incorporates a thick steel liner used primarily for shielding and as a stay-in-place concrete form.

The bottom, middle, and top segments of the storage cask are joined together using eight high strength steel tie rods. The primary function of the tie rods is to provide a secure connection between the cask segments for lifting and handling operations and for all design basis normal, off-normal, and accident loadings. Following assembly of the storage cask, the tie rods are inserted through oversized pipe sleeves cast into the concrete segments and tensioned to provide a specified pre-load of 110 kips per rod. Unlike tendons in pre-stressed concrete, the tie rods are preloaded only to about one-third of their yield strength, hence, the relaxation over the cask life at these low stresses is calculated to be only about 4%. The concrete general compressive stresses due to long-term loads, such as rod tension and cask dead weight, are very low and no significant creep is expected in concrete. Furthermore, the reinforced concrete shear keys between the joints of each segment are designed to withstand all lateral shear loads. No shear loads are taken by the tie rods. For all load cases, a positive net compressive force is maintained

across each joint and the maximum tie rod load is limited to the lesser of the allowable tensile stress of the tie rod or the allowable bearing capacity of the reinforced concrete at the tie rod anchor locations.

The storage cask top cover assembly consists of a thick outer structural plate backed with non-structural concrete to provide axial neutron and gamma shielding. The concrete shield plug is fully encased in steel to preclude concrete spalling onto the top of the canister or into the storage cask annulus. The top cover is bolted to the storage cask top end segment shielding ring. No structural credit is taken for the top cover concrete shield plug. All loads are resisted by the steel cover plate and the top cover attachment bolts.

Each storage cask reinforced concrete segment includes eight guide rail assemblies welded to the steel liner every 45° around its inner surface. The primary function of these guide rail assemblies is to center the canister radially in the storage cask cavity. In addition, two of the guide rails (located at 22.5° on each side of the bottom centerline when the cask is in horizontal orientation) also serve as supports and provide a sliding surface for the canister during horizontal transfer. Each support rail assembly consists of carbon steel bar, a carbon steel rail bolted to the bar, shim plates, and a heat shield retainer plate. The shim plates are used as necessary to achieve proper alignment of the support rail assemblies for the horizontal canister transfer.

The storage cask design includes eight heat shield panels which are positioned between the guide rails. The primary function of the heat shields is to minimize the storage cask concrete temperatures. The structural requirement for the heat shields is only to support their own weight under normal storage and handling conditions such that their positions within the storage cask are maintained. The heat shield panels are captured radially and circumferentially by heat shield retainer plates on the guide rails. Axial support is provided by steel blocks welded to the bottom segment liner. Radial spacing between the heat shield and cask liner is maintained by the formed edges of the heat shield and by longitudinal channel spacers which are riveted to the outside of the heat shield panels.

The storage cask bottom segment includes sixteen stainless steel canister support pipes which are welded to the liner bottom plate. The primary functions of the canister support pipes are to provide spacing between the bottom of the canister and storage cask cavity (to allow air flow for passive convective cooling) and to limit the canister *g*-load during a postulated end drop event to within the acceptable (analyzed) value. The canister support pipes are oriented radially, extending from the edge of the storage cask air inlet opening to the outer radius of the canister shell.

3.1.1.2 Transfer Cask

The features of the FuelSolutions™ transfer cask design are discussed in Section 1.2.1.2 and shown in Figure 1.2-6. The primary function of the transfer cask is to provide radiation shielding and physical protection for the canister during on-site canister handling and transfer operations in all normal, off-normal, and accident conditions. The design conditions are defined in Section 2.3 and include loads resulting from cask handling and canister transfer operations (such as a normal lift or an accidental drop) and natural phenomena (such as earthquakes, tornado winds and missiles).

The FuelSolutions™ transfer cask consists of the cask body and the top and bottom cover assemblies. The primary structural components of the transfer cask body include the cask inner liner, structural shell, top flange, bottom flange, and upper and lower trunnions. The annulus, formed by the transfer cask inner liner, structural shell, and top and bottom end flanges, is filled with lead gamma shielding. In addition, the transfer cask body includes a neutron shield jacket which is relied upon only to contain the liquid neutron shielding under normal and off-normal operating conditions. The transfer cask upper and lower trunnions are used to lift the transfer cask within the spent fuel building, upend/downend the transfer cask onto the transfer skid, support the transfer cask during on-site movement, and secure the transfer cask to the storage cask or transportation cask during canister transfer operations.

The transfer cask top end closure is formed by a top cover and ram access cover. The ram access cover is bolted to the top cover which, in turn, is bolted to the transfer cask body top flange. The bottom end closure is formed by the bottom cover bolted to the transfer cask body bottom flange. The bottom end closure includes an elastomeric O-ring seal which contains the cask annulus water during canister loading operations. All of the transfer cask covers include thick structural plates and encased solid neutron shielding. These covers are selectively removed during canister loading and transfer operations.

3.1.2 Design Criteria

The principal design criteria for the FuelSolutions™ storage system components are presented in Section 2.1.2. This section discusses the general structural criteria used for the design of the storage cask and transfer cask. Table 3.1-1 provides a summary of the storage cask and transfer cask component functions and the applicable design codes. The corresponding safety classifications are defined in Section 2.1.1 of this FSAR. The quality categories for all storage cask and transfer cask components are identified on the general arrangement drawings in Section 1.5.1.

The storage cask and transfer cask are designed to perform their respective functions for all normal, off-normal, and accident conditions. As such, both casks are shown to always remain within the allowable stress values specified by the applicable design codes. This assures a high margin of safety against structural failure and no permanent deformation for all normal and off-normal loading conditions. Under the postulated accident conditions, permanent deformation or local damage is permitted as long as the capability to perform the principal safety functions is not compromised and the accident recovery, including retrieval of the canister, is possible.

3.1.2.1 Storage Cask

3.1.2.1.1 Applicable Codes and Standards

The storage cask structural design relies on reinforced concrete and a steel liner to withstand all structural loads. Some steel components, such as air outlet ducts, are designed as stay-in-place forms and are not credited with any structural capability. Their weight loads are assumed to be completely supported by the concrete shell. The general design requirements for reinforced concrete, including load definitions, load combinations, and allowable stresses, are in accordance

with NUREG-1536[4] and ACI 349.[5] The load combinations are shown in Table 2.3-6. As discussed in Sections 3.5.3.1.2 and 3.7.11, the combinations are modified to envelop all possible design conditions for the FuelSolutions™ storage cask.

Concrete allowable stresses and section capacities are determined in accordance with ACI 349 and summarized in Table 3.1-2. The shear capacities for all cask sections are calculated per foot of circumference or axial length. Following the ACI approach to the concrete design, all tension due to tensile forces and bending moments in the cask sections are resisted by the tension reinforcement. Concrete is assumed to be effective only in compression and contribution of the compression reinforcement is neglected. The tension reinforcement stresses are calculated as discussed in Section 3.5.3.1.1.

In addition to reinforcement required by the structural analysis, ACI 349 limits the minimum and maximum amounts of reinforcing steel used in the concrete structure. The minimum amount of reinforcement must be provided to resist temperature and shrinkage effects as well as nominal flexural loads. The upper limit is provided to assure that concrete failure in flexure is controlled by tension in steel rather than by compression in concrete, thus, ensuring ductile behavior of the structure. The FuelSolutions™ storage cask reinforcement ratios and their comparison to the ACI 349 requirements are summarized in Table 3.1-3.

The cask steel components are analyzed using the load combinations of NUREG-1536. Load combinations for the storage cask structural steel components are presented in Table 2.3-7. The storage cask steel components with a structural function include the following:

- Tie rods that hold the pre-cast segments together
- Steel liner segments, liner bottom plate, and top end shield ring
- Canister support pipes that carry the canister weight during normal conditions and absorb energy during the postulated bottom end drop accident
- Canister support rails used for the horizontal transfer of the canister
- Cask top cover assembly that protects the canister from tornado missiles and prevents its sliding out of the cask in the event of a tip-over accident
- Liner shear lugs that transfer the axial loads from the top and middle liner segments to the concrete
- Ram anchor embedments that transmit the canister transfer load between the hydraulic ram and cask bottom and attach the bottom segment of the steel liner to the concrete bottom of the cask.

Per NUREG-1536, the allowable stresses for steel components are based on AISC[6] with the specified increases for accident conditions. The allowable stress criteria for steel components are summarized in Table 3.1-4.

---

[4] NUREG-1536, *Standard Review Plan for Dry Storage Cask Systems*, US Nuclear Regulatory Commission, 1997.

[5] ACI 349-90, *Code Requirements for Nuclear Safety Related Concrete Structures*, American Concrete Institute

[6] *AISC Manual of Steel Construction - Allowable Stress Design*, Ninth Edition, American Institute of Steel Construction, 1989.

3.1.2.1.2 Supplemental Structural Criteria

The storage cask is designed for operation under extreme off-normal ambient temperatures as low as -40°F, hence, the cask materials of construction are selected to provide sufficient protection against brittle fracture failure at that temperature.

Brittle fracture failure is not applicable to the reinforced concrete components. In accordance with NUREG/CR-1815,[7] the storage cask liner (shell, bottom plate, and shield ring) and top cover plate are considered Category III components and must have sufficient fracture toughness to prevent fracture initiation at minor defects typical of good fabrication practices. Section 5.3.1(4) of NUREG/CR-1815 states that this can be achieved by specifying a material with a minimum energy absorption (C_V) of 15 ft-lb at 10°F. Therefore, the storage cask carbon steel liner and top cover are fabricated from carbon steel with a supplementary requirement of demonstrating the above fracture toughness. As such, sufficient degree of safety is provided against brittle fracture failure in the storage cask liner and cover.

The storage cask cover is attached to the storage cask body using twelve 1¼ inch socket head cap screws fabricated from SAE Grade 8 bolting material. In accordance with Section 5 of NUREG/CR-1815, bolts are generally not considered as fracture-critical components because multiple load paths exist and bolting systems are generally redundant, as is the case with the storage cask.

The storage cask top, middle, and bottom reinforced concrete segments are joined together using eight full-length tie rods. The tie rods are fabricated from ASTM A564, Grade 630 (H1150) precipitation-hardened stainless steel. This material and associated clamp nut shall be tested to the same requirements as the storage cask liner and cover plate as noted above.

3.1.2.2 Transfer Cask

3.1.2.2.1 Applicable Codes and Standards

The transfer cask structural components that are important to safety are designed using linear elastic analysis in accordance with the criteria of ASME Code, Subsection NF[8] for Class 1 component supports. These criteria are applicable to the transfer cask inner liner, structural shell, top flange, bottom flange, lower trunnions, neutron shield jacket, top cover, bottom cover, ram access cover, closure bolts, and all structural welds, including the trunnion-to-shell welds. A summary of the transfer cask component functions, safety classes, and applicable codes and standards is provided in Table 3.1-1. The transfer cask allowable stress criteria of NF-3220 is summarized in Table 3.1-5. Subsection NF does not require the evaluation of thermal stress or

[7] NUREG/CR-1815, *Recommendations for Protecting Against Failure by Brittle Fracture in Ferritic Steel Shipping Containers Up to Four Inch Thick*, Holman, W.R., Langland, R.T., UCRL-53013, US NRC, August 1981.

[8] American Society of Mechanical Engineers (ASME) Boiler and Pressure Vessel (B&PV) Code, Section III, Division 1, Subsection NF, *Component Supports*, 1995 Edition.

peak stress. In order to address thermal and peak stresses, the design criteria of the more restrictive Subsection NC[9] of the ASME Code are used.

The transfer cask upper trunnions are used to lift and handle the transfer cask inside the fuel building in areas where its accidental drop could damage safe shutdown equipment. As such, the transfer cask upper trunnions are considered interfacing lift points and are designed in accordance with the requirements of paragraph 5.1.6(3)(b) of NUREG-0612[10] and Section 7.2 of ANSI N14.6[11] for non-redundant lifting devices supporting a critical load. Factors of safety of 6 on the material yield strength and 10 on the material ultimate strength are required for shear and bending stresses in the upper trunnions as they carry the maximum weight of the transfer cask and its contents plus any dynamic amplification due to handling loads.

The transfer cask lower trunnions are used only for rotating the transfer cask between vertical and horizontal orientation and supporting the transfer cask horizontally on the transfer skid. The lower trunnions are not interfacing lift points for any critical lift conditions. As such, the lower trunnions do not have to meet the requirements of NUREG-0612 and are designed in accordance with Subsection NF of the ASME Code, as discussed above.

3.1.2.2.2 Supplemental Structural Criteria

Brittle Fracture

All structural components of the FuelSolutions™ transfer cask are fabricated from austenitic stainless steels. With the exception of the transfer cask top and bottom cover bolts, all transfer cask materials are Type 304, Type F304, or Type F304N austenitic stainless steel. Since these materials do not undergo a ductile to brittle transition in the temperature range of interest (down to -40°F), they are not subject to brittle fracture.

The cover bolts are fabricated from SA-320, Grade L43 bolting steel. As discussed in NUREG/CR-1815, closure bolts are generally not considered fracture critical components if the bolting system is redundant. The top and bottom covers are each fastened to the transfer cask body using 16 bolts. Similarly, the ram access cover is attached using four bolts. Therefore, the transfer cask cover bolting systems are redundant and are not fracture critical components.

Fatigue

The transfer cask is designed to the requirements of Subsection NF of the ASME Code which does not require evaluation of fatigue. However, for completeness of the transfer cask design and analysis, fatigue is evaluated using the criteria of Subsection NC of the ASME Code. As discussed in Section 3.5.3.3.5, the analysis of the FuelSolutions™ transfer cask demonstrates that normal operating cycles do not present a fatigue concern for the FuelSolutions™ transfer cask components over the 40-year service life.

---

[9] American Society of Mechanical Engineers (ASME) Boiler and Pressure Vessel (B&PV) Code, Section III, Division 1, Subsection NC, *Class 2 Components*, 1995 Edition.

[10] NUREG-0612, *Control of Heavy Loads at Nuclear Power Plants*, US Nuclear Regulatory Commission July 1980.

[11] ANSI N14.6, American National Standard for Radioactive Material, *Special Lifting Devices for Shipping Containers Weighing 10000 Pounds (4500 kg) or More*, American National Standards Institute, 1993.

Buckling

In addition to the linear elastic stress analysis discussed in Section 3.1.2.2.1, general instability of the transfer cask shell is evaluated for the postulated 72-inch side drop accident at the storage pad. These evaluations are performed to assure that the transfer cask does not buckle and potentially compromise integrity of the canister or prevent retrieval of the canister following a drop accident. Because of these criteria, an elasto-plastic analysis of the transfer cask body is performed to determine the plastic instability load (i.e., load at which unbounded plastic deformation can occur without increase in load). In accordance with the requirements of F-1341.4(a) of the ASME Code, the maximum applied load is limited to 70% of the plastic instability load.

Table 3.1-1 - Storage Cask and Transfer Cask Component Functions and Design Codes

Cask	Component	Function(s)	Design Codes
Storage Cask	Reinforced Concrete	Shielding and Structural	ACI 349
	Steel Liner	Shielding and Structural	AISC(1)
	Liner Shear Lugs	Structural	AISC(1)
	Shield Ring	Shielding and Structural	AISC(1)
	Tie Rod	Structural	AISC(1)
	Canister Support Rail	Structural	AISC(1)
	Canister Support Pipe	Structural and Heat Transfer	AISC(1)
	Cover Plate and Bolts	Structural and Shielding	AISC(1)
	Thermal Shield	Heat Transfer	Non-Code
Transfer Cask	Inner Liner	Structural and Shielding	ASME NF(2)
	Structural Shell	Structural and Shielding	ASME NF(2)
	Top Flange	Structural	ASME NF(2)
	Bottom Flange	Structural	ASME NF(2)
	Neutron Shield Jacket	Shielding	ASME NF(2)
	Gamma Shield	Shielding	Non-Code
	Liquid Neutron Shield	Shielding	Non-Code
	Upper Trunnions	Structural	ANSI N14.6
	Lower Trunnions	Structural	ASME NF(2)
	Top Cover	Structural and Shielding	ASME NF(2)
	Ram Access Cover	Structural and Shielding	ASME NF(2)
	Bottom Cover	Structural and Shielding	ASME NF(2)

Notes:

(1) In accordance with NUREG-1536, the normal allowable stresses are increased by factors of 1.6 and 1.7 for accident conditions.

(2) As discussed in Section 3.1.2.2.1, Subsection NC criteria are used for the transfer cask thermal stress and fatigue evaluations.

Table 3.1-2 - Storage Cask Concrete Stress and Section Allowables

Section	Force or Stress[1]	Structural Capacity (U_c)	
		Static	Dynamic[2]
Through Wall Hoop	θR Shear force (ϕV_n)	202.0	222.3
	Tension reinforcement stress (ϕf_y)	54.0	59.4
Through Wall Axial	zR Shear force (ϕV_n)	192.3	211.5
	Tension reinforcement stress (ϕf_y)	54.0	59.4
Shear Key	In-plane force (ϕV_n)	30.6	33.7
Through Bottom Radial (at Liner Plane)	Tension reinforcement stress (ϕf_y)	54.0	59.4
Shear Lug	Bearing force (ϕF_c)[3]	9.7	12.1
Tie Rod Anchor	Bearing stress (ϕf_c)[3]	5.95	-

Notes:

(1) The units are kips/ft (forces) and ksi (stresses). The shear lug bearing force is in kips/inch.

(2) The dynamic capacities include the strength increase factors of 1.1 for reinforcing steel and 1.25 for concrete (per ACI 349, Appendix C).

(3) Allowable bearing on concrete includes a factor of 2 per ACI 349, 10.15.1.1.

Table 3.1-3 - Evaluation of Storage Cask Concrete Reinforcement Ratios

Component	Surface	Sub-surface	Direction	Ratio ($\rho = A_s / bd$)		
				Min	Actual	Max
Cylindrical Wall	Outside	N/A	Hoop	0.0018	0.0046	0.025
			Axial	0.0018	0.0037	
	Inside	N/A	Hoop	0.0018	0.0046	
			Axial	0.0018	0.0037	
	N/A	N/A	Shear	0.035(1)	0.31(1)	N/A
Bottom Slab	Under Liner	Over inlets	Radial	0.0018	0.013	0.025
			Hoop	0.0012	0.0042	
		Between inlets	Radial	0.0018	0.0043	
			Hoop	0.0012	0.0015	
	Bottom	Over Inlets	Radial	0.0012	0.017	
			Hoop	0.0012	0.0048	
		Between inlets	X and Y	0.0012	0.0013	

Note:

(1) The actual and minimum requirements for the shear reinforcement are presented in inch^2 per tributary area of concrete.

Table 3.1-4 - Storage Cask Structural Steel Allowable Stresses

Component/Stress	Temp. (°F)	Normal and Off-Normal[1]	Accidents (E, W_t, and Canister Transfer)[2]	Accidents (A and T_a)[2]
Top cover bending[3], ksi	200	$0.75F_y$ = 71.6	1.6 × normal = 114.6	1.7 × normal = 121.7
Top cover shear, ksi		$0.4F_y$= 38.2	1.4 × normal = 53.5	1.4 × normal = 53.5
Liner membrane and bending, ksi	350	$0.6F_y$ = 18.8	1.6 × normal = 30.1	1.7 × normal = 32.0
Liner shear, ksi		$0.4F_y$ = 12.5	1.4 × normal = 17.5	1.4 × normal = 17.5
Bottom plate membrane, ksi	150	$0.6F_y$ = 20.6	1.6 × normal = 33.0	1.7 × normal = 35.0
Bottom plate bending, ksi		$0.75F_y$ = 25.8	1.6 × normal = 41.3	1.7 × normal = 43.9
Bottom plate shear, ksi		$0.4F_y$ = 13.8	1.4 × normal = 19.3	1.4 × normal = 19.3
Weld throat shear, ksi	150	$0.3F_u$ = 21.0	1.4 × normal = 29.4	1.4 × normal = 29.4
Tie rod tension, kips	300	lower of 187[4] and $0.33F_u A$ = 139.9	lower of 187[4] and 1.6 × normal = 223.8	lower of 187[4] and 1.7 × normal = 237.8
Ram anchor bolt tension, kips	100	$0.33F_u A$ = 35.0	1.6 × normal = 56.0	N/A
Rail attachment bolt shear, kips	200	$0.17F_u A$ = 9.0	1.4 × normal = 12.6	N/A
Cask cover bolt tension, kips	200	$0.33F_u A$ = 48.7	N/A	1.7 × normal = 82.8
Cask cover bolt shear, kips	200	$0.17F_u A$ = 25.1	N/A	1.4 × normal = 35.1
Tie rod bearing plate bending, ksi	100	$0.75F_y$ = 22.5	N/A	N/A
Canister support pipe bending, ksi	200	$0.75F_y$ = 18.8	N/A	N/A

Notes:

(1) Per NUREG-1536, normal allowables are determined per AISC.

(2) The stress increase factors are per NUREG-1536, Table 3-1.

(3) The cask cover plate stresses are dominated by bending, thus, the outer fiber stress (membrane plus bending) is compared against the bending stress allowable.

(4) The tie rod load may be limited by the anchor point design.

Table 3.1-5 - Transfer Cask Allowable Stresses

Components	Stress Type	Condition (Service Level)			
		Normal (Level A)	Off-Normal (Level B)	Off-Normal (Level C)	Accident (Level D)
Cask Components Other than Bolts	General Membrane S.I., (P_m)	S_m	$1.33S_m$	$1.5S_m$	Lesser of $2.4S_m$ and $0.7S_u$
	Membrane + Bending S.I. ($P_m + P_b$)	$1.5S_m$	$2.0S_m$	$2.25S_m$	150% of P_m allowable
	Secondary S.I.[(1)] (P_m+P_b+Q)	$3S_m$, not to exceed the lesser of $2S_y$ or S_u		N/A	N/A
	Buckling	N/A	N/A	N/A	$0.7P_I$[(2)]
Bolts	Pure Tension (F_{tb})	$0.5S_u$	115% of Level A Allowable	125% of Level A Allowable	Lesser of $0.7S_u$ and S_y
	Pure Shear (F_{vb})	$\frac{0.62S_u}{3}$	115% of Level A Allowable	125% of Level A Allowable	Lesser of $0.42S_u$ and $0.6S_y$
	Combined Stress	$\frac{f_t^2}{F_{tb}^2} + \frac{f_v^2}{F_{vb}^2} \leq 1.0$			

Notes:

(1) Evaluation of secondary stresses is not required by Subsection NF. However, primary plus secondary stress intensity limits are selected in accordance with Subsection NC.

(2) The plastic instability load, P_I, is determined from a plastic analysis in accordance with F-1341.4.

3.2 Weights and Centers of Gravity

This section presents the total weights and center of gravity locations of the FuelSolutions™ storage and transfer casks loaded with the design basis FuelSolutions™ canister and its contents. All weights and centers of gravity are based upon the bounding component configurations. Centers of gravity are calculated relative to the bottom end of the storage cask and transfer cask.

Several configurations are considered to determine the bounding weights and centers of gravity used in the structural evaluation. These include the heaviest short and long canister and contents for the maximum weight condition and the canister with the highest center of gravity for the minimum overturning stability condition.

The bounding weights and center of gravity locations for the short and long storage casks are presented in Table 3.2-1. The centers of gravity for the storage cask components and contents are illustrated in Figure 3.2-1.

The weights of the transfer cask are calculated for two controlling configurations including: 1) the weight on the crane hook for vertical lifting from the spent fuel pool, and 2) the dry weight in the on-site transfer configuration. The under-the-hook weight for the vertical lift from the spent fuel pool includes the transfer cask body and bottom cover, the canister without the inner and outer top end closure plates, the heaviest spent fuel assemblies, water in the cask and canister cavities, the filled liquid neutron shield, and the cask lifting yoke. Optionally, the cask liquid neutron shield can be drained prior to placing the cask in the spent fuel pool to minimize the hook weight. Table 3.2-2 presents the transfer cask under-the-hook weights with and without the neutron shield.

The bounding weights and centers of gravity of the dry loaded transfer cask are presented in Table 3.2-3. It must be noted that the transfer cask is designed to accommodate either short or long canister (for the short canister, a spacer is used at the bottom of the cask cavity).

Figure 3.2-2 shows the locations of the transfer cask centers of gravity for the dry loaded configurations.

Table 3.2-1 - Storage Cask Weights and Centers of Gravity

Component	Short Storage Cask		Long Storage Cask	
	Weight[1] (pounds)	C.G.[2] (inches)	Weight[1] (pounds)	C.G.[2] (inches)
Storage Cask Body	242,492	111.7	253,204	116.7
Canister (heaviest)	78,538	114.1	80,888	120.1
Canister (lightest)	68,665	116.4	67,916	118.7
Totals (heaviest)	321,030	112.3	334,092	117.5
Totals (lightest)[3]	311,157	112.7	321,119	117.1
Totals (highest cg)[3]	314,319	113.1	325,787	117.7

Notes:

(1) Weight includes bearing plates, washers, and nuts.

(2) All centers of gravity are measured relative to the bottom end of the storage cask.

(3) Minimum weight and highest center of gravity are used for bounding stability analyses.

Table 3.2-2 - Transfer Cask Under-the-Hook Weights

Component	Hook Weight With Filled Liquid Neutron Shield (pounds)		Hook Weight With Empty Neutron Shield (pounds)		Vertical Canister Transfer (pounds)
	Long Canister	Short Canister	Long Canister	Short Canister	
Transfer Cask	106,942	106,942	102,218	102,218	101,541[1]
Canister (heaviest)	91,450[2]	88,716[2]	91,450[2]	88,716[2]	80,888
Cask Cavity Axial Spacer	N/A	862	N/A	862	N/A
Water in Cask Annulus	946	2,072	946	2,072	N/A
Vertical Lift Fixture	N/A	N/A	N/A	N/A	10,000
Subtotals	**199,337**	**198,591**	**194,613**	**193,868**	**192,429**
Lifting Yoke and Extension	5,000	5,000	5,000	5,000	5,000
Totals	**204,337**	**203,591**	**199,613**	**198,868**	**197,429**

Notes:

(1) The vertical transfer weight includes the liquid neutron shield and does not include the cask covers.

(2) Weight of canister assembly corresponds to heaviest loaded canister assembly when filled with water and without the top end inner and outer closure plates.

Table 3.2-3 - Transfer Cask Dry Weights and Centers of Gravity

Component	Short Canister Assembly		Long Canister Assembly	
	Weight (pounds)	C.G.[1] (inches)	Weight (pounds)	C.G.[1] (inches)
Transfer Cask	112,107	102.1	112,107	102.1
Canister Assembly (Heaviest)	78,538	107.4	80,888	103.3
Canister Assembly (Lightest)	68,665	109.7	67,916	102.0
Cask Cavity Axial Spacer	862	11.3	N/A	N/A
Totals (heaviest)	**191,507**	**103.8**	**192,996**	**102.6**
Totals (lightest)	**181,634**	**104.5**	**180,023**	**102.0**
Totals (highest cg)	**181,634**	**104.5**	**192,996**	**102.6**

Note:

(1) All centers of gravity are measured relative to the bottom end of the transfer cask.

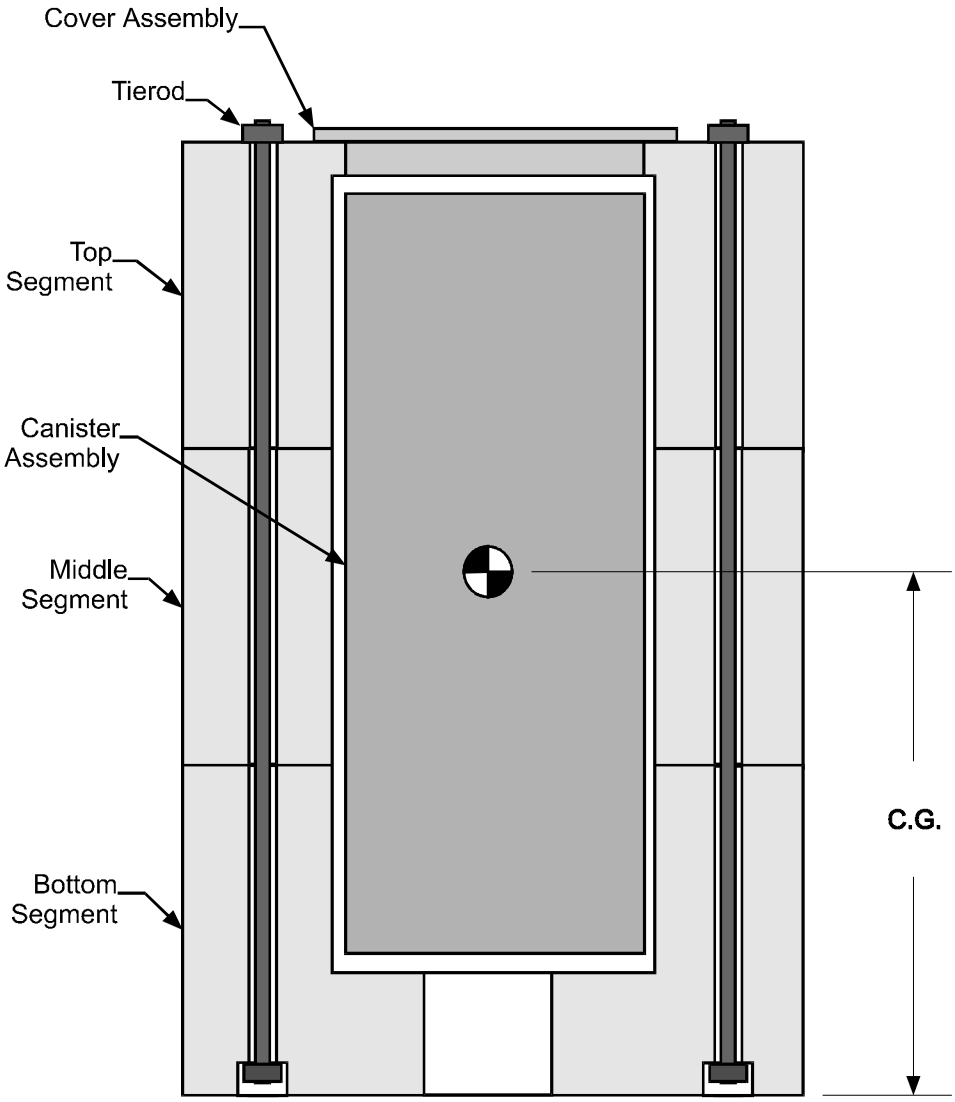

Figure 3.2-1 - Storage Cask Center of Gravity Diagrams

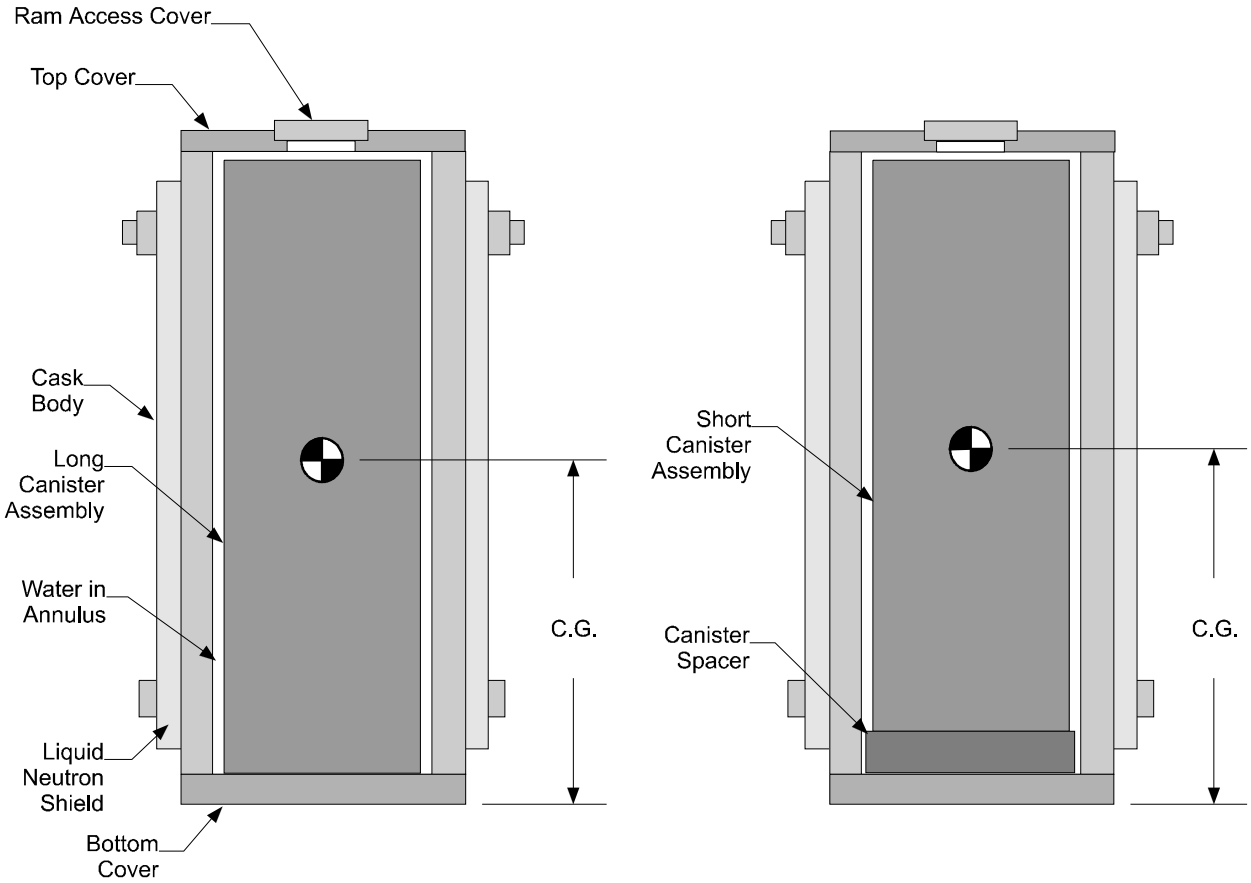

Figure 3.2-2 - Transfer Cask Center of Gravity Diagrams for Dry Loaded Configuration

This page intentionally left blank.

3.3 Mechanical Properties of Materials

This section provides the mechanical properties for the materials used in the structural evaluation of the FuelSolutions™ storage and transfer casks. Mechanical properties of materials, including the allowable stress, yield and ultimate tensile strength, elastic modulus, and coefficient of thermal expansion, are tabulated for the range of temperatures expected for normal, off-normal, and accident conditions. The expected temperature ranges are presented in Chapter 4.

The upper bound weight densities for storage cask components are 501 pcf for stainless steel, 489 pcf for carbon steel, and 150 pcf for reinforced concrete. These bounding densities are conservative for the structural analysis since they result in bounding component weights and, consequently, bounding dead weight, handling, and drop loads.

3.3.1 Storage Cask

The storage cask materials of construction are identified on the drawings in Section 1.5.1 and summarized in Table 3.3-1. The mechanical properties of the storage cask materials are presented in Table 3.3-2 and Table 3.3-3.

3.3.2 Transfer Cask

The transfer cask materials of construction are identified on the drawings in Section 1.5.1 and summarized in Table 3.3-4. Temperature dependent mechanical properties of the transfer cask structural materials are presented in Table 3.3-5. The mechanical properties of the transfer cask shielding materials are presented in Table 3.3-6. Linear elastic material properties are used for all structural materials under all loading conditions except that elastic-plastic material properties are used to determine the plastic instability load, P_I, for the transfer cask side drop.

For the side drop plastic instability analysis, the elastic plastic material properties of Type 304 stainless steel at 200°F, 300°F, and 400°F are developed using the Ramberg-Osgood[12] relationship as follows:

$$\frac{\varepsilon}{\varepsilon_o} = \frac{\sigma}{\sigma_o} + \alpha\left(\frac{\sigma}{\sigma_o}\right)^n$$

where ε and σ are true strain and true stress, ε_o and σ_o are true yield strain and true yield stress, and α and n are the Ramberg-Osgood true stress strain parameters. The Ramberg-Osgood true stress strain parameters (α and n) are given by:

$$n = \frac{1}{\ln(1 + e_u)}$$

[12] Gerber, T. L., et. al., *Evaluation of High-Energy Pipe Rupture Experiments*, EPRI Report No. NP-5531, January 1988.

$$\alpha = \left[\frac{\ln(1+e_u)}{\ln\left(1+{S_y}/{E}\right)} - \frac{S_u(1+e_u)}{S_y\left(1+{S_y}/{E}\right)} \right] \left[\frac{S_u(1+e_u)}{S_y\left(1+{S_y}/{E}\right)} \right]^{-n}$$

where e_u is the engineering strain at ultimate tensile strength, S_y is the yield strength, S_u is the ultimate tensile strength, and E is the modulus of elasticity. The engineering stress and strain (S and e) are determined from the true stress and strain (σ and ε) as follows:

$$\sigma = S(1+e)$$

$$\varepsilon = \ln(1+e)$$

The Ramberg-Osgood parameters, and resulting elastic-plastic stress-strain data for Type 304 stainless steel is presented in Table 3.3-7 and Figure 3.3-1.

In addition, strain rate dependent plastic material properties are used for the lead gamma shielding for the postulated accident side drop analysis. Dynamic elastic-plastic steel and lead properties at room temperature are obtained from NUREG/CR-0481[13] for a strain rate of approximately 100 sec^{-1} representative of the strain rates for the storage drop conditions. These stresses are adjusted to account for reduced strength at elevated temperatures based upon the temperature dependent lead data also provided in NUREG/CR-0481. The resulting dynamic stress-strain data for lead at 100°F, 250°F, and 325°F is shown in Table 3.3-8 and the corresponding curve is plotted in Figure 3.3-2. Lead properties at intermediate temperatures are determined by interpolation.

[13] NUREG/CR-0481, *An Assessment of Stress-Strain Data Suitable for Finite-Element Elastic-Plastic Analysis of Shipping Containers*, US Nuclear Regulatory Commission, September 1981.

Table 3.3-1 - Summary of Storage Cask Materials of Construction

Component	Material Specification	Welding Process	Weld Filler Metal	Reference Table
Steel Liners, Rail Plates, Shielding Ring, Ram Anchor Embedment Plates	ASTM A36	(1)	(2)	Table 3.3-2
Cover Plate	ASTM A514	(1)	(2)	Table 3.3-2
Tie Rod Tubes	ASTM A53, Grade B, Type E	(1)	(2)	Table 3.3-2
Tie Rods	ASTM A564, Grade 630	(1)	(2)	Table 3.3-2
Tie Rod Bearing Plates	ASTM 240, Type 304	(1)	(2)	Table 3.3-5
Lid Assembly and Rail Bolts	SAE Grade 8	(1)	(2)	Table 3.3-2
Canister Support Pipes	ASTM A312, Type TP304	(1)	(2)	Table 3.3-2
Ram Anchor Tubes	ASTM A519 1018/1026	(1)	(2)	Table 3.3-2
Reinforcing Bars	ASTM A615, Grade 60	N/A	N/A	Table 3.3-3
Concrete	---	N/A	N/A	Table 3.3-3

Notes:

(1) Any electric arc process permitted by AWS D1.1 and AISC Manual of Steel Construction.

(2) Filler materials shall conform to AWS D1.1 and AISC Specification for Structural Steel Buildings.

Table 3.3-2 - Storage Cask Structural Steel Mechanical Properties of Materials[1]

Material Specification	Temperature (°F)	Yield Strength, S_y (ksi)	Ultimate Strength, S_u (ksi)	Young's Modulus, E (10^3 ksi)	Coefficient of Thermal Expansion[2] (10^{-6} in/in/°F)
A 36[3]	70	36.0	58.0	29.5	---
	100	36.0	58.0	29.3	6.50
	200	32.8	58.0	28.8	6.67
	300	31.9	58.0	28.3	6.87
A 514	70	100.0	110.0	29.5	---
	100	100.0	110.0	29.3	6.27
	200	95.5	110.0	28.8	6.54
	300	92.5	110.0	28.3	6.78
A 53[4] Type E, Grade B	70	35.0	60.0	29.5	---
	100	35.0	60.0	29.3	6.50
	200	31.8	54.5	28.8	6.67
	300	31.0	53.1	28.3	6.87
A 312, Type TP304	70	30.0	75.0	28.3	---
	100	30.0	75.0	28.3	8.55
	200	25.0	71.0	27.6	8.79
	300	22.5	66.0	27.0	9.00
A 240, Type 304	see Table 3.3-5				
A 564 Grade 630	70	105.0	135.0	29.2	---
	100	105.0	135.0	29.0	5.89
	200	97.1	135.0	28.5	5.90
	300	93.0	135.0	27.9	5.90
SAE[5] Gr. 8	70	130.0	150.0	29.3	6.41

Notes:

(1) Unless otherwise noted, properties are from the 1995 ASME B&PV Code, Section II, Part D.

(2) Mean coefficients of thermal expansion are reported unless otherwise noted.

(3) S_u for A 36 is obtained from the ASME B&PV Code Case N-71-16.[14]

(4) S_u for A 53 is calculated as $S_u = S_{ur}(S_y/S_{yr})$ per Regulatory Guide 1.124, Section C, Method 2.

(5) SAE Grade 8 yield and ultimate strength are obtained from SAE Standard J429.[15] The modulus of elasticity and coefficient of thermal expansion are assumed to be that of carbon steel, with carbon content > 0.30%.

[14] Case N-71-16, *Additional Materials for Subsection NF, Class 1, 2, 3 and MC Component Supports Fabricated by Welding*, ASME Boiler and Pressure Vessel Code, Section III, Division 1, Code Cases, 1995 Edition.

[15] SAE Standard J429, *Mechanical and Material Requirements for Externally Threaded Fasteners*, 1983.

Table 3.3-3 - Mechanical Properties of Storage Cask Reinforced Concrete

Material Specification	Temperature (°F)	Yield Strength, S_y (ksi)	Ultimate Strength, S_u (ksi)	Young's Modulus, E (10^3 ksi)	Coefficient of Thermal Expansion(1) (10^{-6} in/in/ °F)
A 615 Grade 60	70	60.0(2)	90.0(2)	29.0(3)	---
	100	60.0(2)	90.0(2)	28.8(3)	6.50(4)
	200	60.0(2)	90.0(2)	28.3(3)	6.67(4)
Concrete	70	N/A	f_c' = 5.0(5)	4.0(6)	5.50(7)
	100	N/A	f_c' = 5.0(5)	4.0(6)	5.50(7)
	200	N/A	f_c' = 5.0(5)	4.0(6)	5.50(7)

Notes:
(1) Instantaneous coefficients of thermal expansion are reported.
(2) Yield and ultimate strength for A615 reinforcing steel are obtained from the ASTM specification. The yield and ultimate strengths at temperatures up to 200°F is assumed to be the same as the ultimate strength at 70°F, based on ACI 349, Appendix A, Section A.4, and Figures 5.1 and 5.2 of ACI 216.
(3) From ACI 318, Section 8.5.2. The reduction at elevated temperatures is assumed to be of the same ratio as that for a carbon steel.
(4) Assumed to be equivalent to the value for a plain carbon or carbon-manganese steel in Table TE-1 of the ASME B&PV Code, Section II,[16] Part D.
(5) Assumed to remain the same up to 200°F and based on ACI 349, Appendix A, Section A.4, and Figures 6.1.1 and 6.1.2 of ACI 216.
(6) Determined per ACI 349, Section 8.5.1 as a function of f_c'.
(7) The instantaneous coefficient of thermal expansion for concrete is taken from ACI 349, Appendix A, Section A.3.3(d). It is assumed to remain constant up to 200°F.

[16] ASME Boiler and Pressure Vessel Code, Section II, Part D, *Material Properties,* 1995 Edition.

Table 3.3-4 - Summary of Transfer Cask Materials of Construction

Component	Material Specification	Welding Process	Weld Filler Metal	Reference Table
Inner and Structural Shells, Cover Plates	ASME SA-240, Type 304	(1)	(2)	Table 3.3-5
Top and Bottom Flanges	ASME SA-336, Type F304	(3)	(2)	Table 3.3-5
Upper Trunnions	ASME SA-336, Type F304N	(3)	(2)	Table 3.3-5
Lower Trunnions	ASME SA-336, Type F304N	(3)	(2)	Table 3.3-5
Cover Closure Bolts	ASTM SA-320, Grade L43	N/A	N/A	Table 3.3-5
Gamma Shield	ASTM B29 Chemical Lead	N/A	N/A	Table 3.3-6
Solid Neutron Shields	GESC NS-3 / RX-277	N/A	N/A	Table 3.3-6

Notes:

(1) SMAW, SAW, GTAW, GMAW, or FCAW.

(2) E308L-XX, ER308L, or ER308LT-X.

(3) SMAW, GTAW, GMAW, or FCAW.

Table 3.3-5 - Transfer Cask Structural Material Properties

Material Spec.	Temp. (°F)	Yield Strength, S_y(1) (ksi)	Ultimate Strength, S_u(2) (ksi)	Design S.I., S_m(3) (ksi)	Young's Modulus, E(4) (10^3 ksi)	Coefficient of Thermal Expansion(5) (10^{-6} in/in/°F)	
SA-240 Type 304	70	30.0	75.0	20.0	28.3	8.46	-
	100	30.0	75.0	20.0	28.1	8.63	8.55
	200	25.0	71.0	20.0	27.6	9.08	8.79
	300	22.5	66.0	20.0	27.0	9.46	9.00
	400	20.7	64.4	18.7	26.5	9.80	9.19
	500	19.4	63.5	17.5	25.8	10.10	9.37
SA-336 Type F304N	70	35.0	80.0	23.3	28.3	8.46	-
	100	35.0	80.0	23.3	28.1	8.63	8.55
	200	28.7	80.0	23.3	27.6	9.08	8.79
	300	25.0	75.9	22.5	27.0	9.46	9.00
	400	22.5	73.2	20.3	26.5	9.80	9.19
	500	20.9	71.2	18.8	25.8	10.10	9.37
SA-336 Type F304	70	30.0	70.0	20.0	28.3	8.46	-
	100	30.0	70.0	20.0	28.1	8.63	8.55
	200	25.0	66.2	20.0	27.6	9.08	8.79
	300	22.5	61.5	20.0	27.0	9.46	9.00
	400	20.7	59.3	18.7	26.5	9.80	9.19
	500	19.4	59.3	17.5	25.8	10.10	9.37
SA-320 Grade L43	70	105.0	125.0	35.0	27.8	6.20	-
	100	105.0	125.0	35.0	27.6	6.37	6.27
	200	99.0	125.0	33.0	27.1	6.85	6.54
	300	95.7	125.0	31.9	26.7	7.25	6.78
	400	91.8	125.0	30.6	26.1	7.59	6.98
	500	88.5	125.0	29.5	25.7	7.90	7.16

Notes:

(1) ASME B&PV Code, Section II, Part D, Table Y-1.

(2) ASME B&PV Code, Section II, Part D, Table U.

(3) ASME B&PV Code, Section II, Part D, Table 2A.

(4) ASME B&PV Code, Section II, Part D, Table TM-1.

(5) ASME B&PV Code, Section II, Part D, Table TE-1 (instantaneous and mean values).

Table 3.3-6 - Transfer Cask Shielding Material Properties

Material Spec.	Temp. (°F)	Yield Strength, S_y (ksi)	Ultimate Strength, S_u (ksi)	Design S.I., S_m (ksi)	Young's Modulus, E (10^3 ksi)	Coefficient of Thermal Expansion (10^{-6} in/in/ °F)
GESC NS-3[1]	70	N/A	N/A	N/A	N/A	7.81
RX-277[1]	70	N/A	N/A	N/A	N/A	8.0
ASTM B29 Chemical Lead[2]	-40	---	---	---	2.46	15.56
	-20	---	---	---	2.43	15.65
	70	0.85	2.0	---	2.27	16.06
	100	---	---	---	2.21	16.22
	200	---	---	---	2.01	16.7
	300	0.30	0.6	---	1.85	17.33
	400	---	---	---	1.7	18.16
	500	---	---	---	1.52	19.12

Notes:

(1) From product literature.

(2) Lead properties obtained from NUREG/CR-0481.

Table 3.3-7 - Type 304 Stainless Steel Elastic-Plastic Properties for Transfer Cask Plastic Instability Analysis

Stress-Strain Properties at Temperature[1]					
200°F		300°F		400°F	
e_u = 0.35		e_u = 0.35		e_u = 0.35	
e_{tot} = 0.40		e_{tot} = 0.40		e_{tot} = 0.40	
n = 3.33		n = 3.33		n = 3.33	
α = 3.73		α = 3.64		α = 3.19	
Strain	**Stress[2] (psi)**	**Strain**	**Stress[2] (psi)**	**Strain**	**Stress[2] (psi)**
0.00000	0	0.00000	0	0.00000	0
0.00008	2,150	0.00008	2,080	0.00008	2,030
0.00017	4,307	0.00017	4,150	0.00016	4,060
0.00027	6,494	0.00027	6,230	0.00027	6,090
0.00042	8,729	0.00042	8,310	0.00042	8,120
0.00062	10,980	0.00062	10,390	0.00062	10,090
0.00089	13,220	0.00089	12,490	0.00089	12,190
0.00125	15,480	0.00125	14,480	0.00125	14,180
0.00172	17,700	0.00172	16,570	0.00172	16,170
0.00233	19,940	0.00233	18,660	0.00233	18,260
0.00310	22,170	0.00310	20,740	0.00310	20,240
0.00403	24,370	0.00405	22,710	0.00406	22,210
0.00518	26,560	0.00520	24,770	0.00521	24,270
0.00656	28,760	0.00660	26,820	0.00661	26,230
0.02100	41,390	0.02140	38,670	0.02140	37,790
0.04400	50,960	0.04590	47,710	0.04590	46,560
0.08000	59,080	0.08650	55,410	0.08670	54,200
0.17000	67,980	0.20300	63,910	0.22400	63,000
0.30000	70,930	0.42300	65,690	0.42300	64,150

Notes:

(1) Corresponding stress-strain curve shown in Figure 3.3-1.

(2) Normalized based on yield strength at temperature from ASME B&PV Code, Section II, Part D, 1995 Edition.

Table 3.3-8 - Dynamic Elastic-Plastic Properties for Transfer Cask Lead[1]

Strain	Stress (psi)		
	100°F	250°F	325°F
0.001	1000.0	812.5	625.0
0.010	1600.0	1061.6	796.0
0.020	1950.0	1232.0	886.0
0.030	2300.0	1344.6	973.0
0.040	2550.0	1471.8	1053.0
0.050	2800.0	1579.5	1113.0
0.080	3250.0	1833.3	1300.0
0.100	3500.0	1974.4	1400.0
0.200	4200.0	2369.2	1680.0

Note:
(1) Corresponding stress-strain curve shown in Figure 3.3-2.

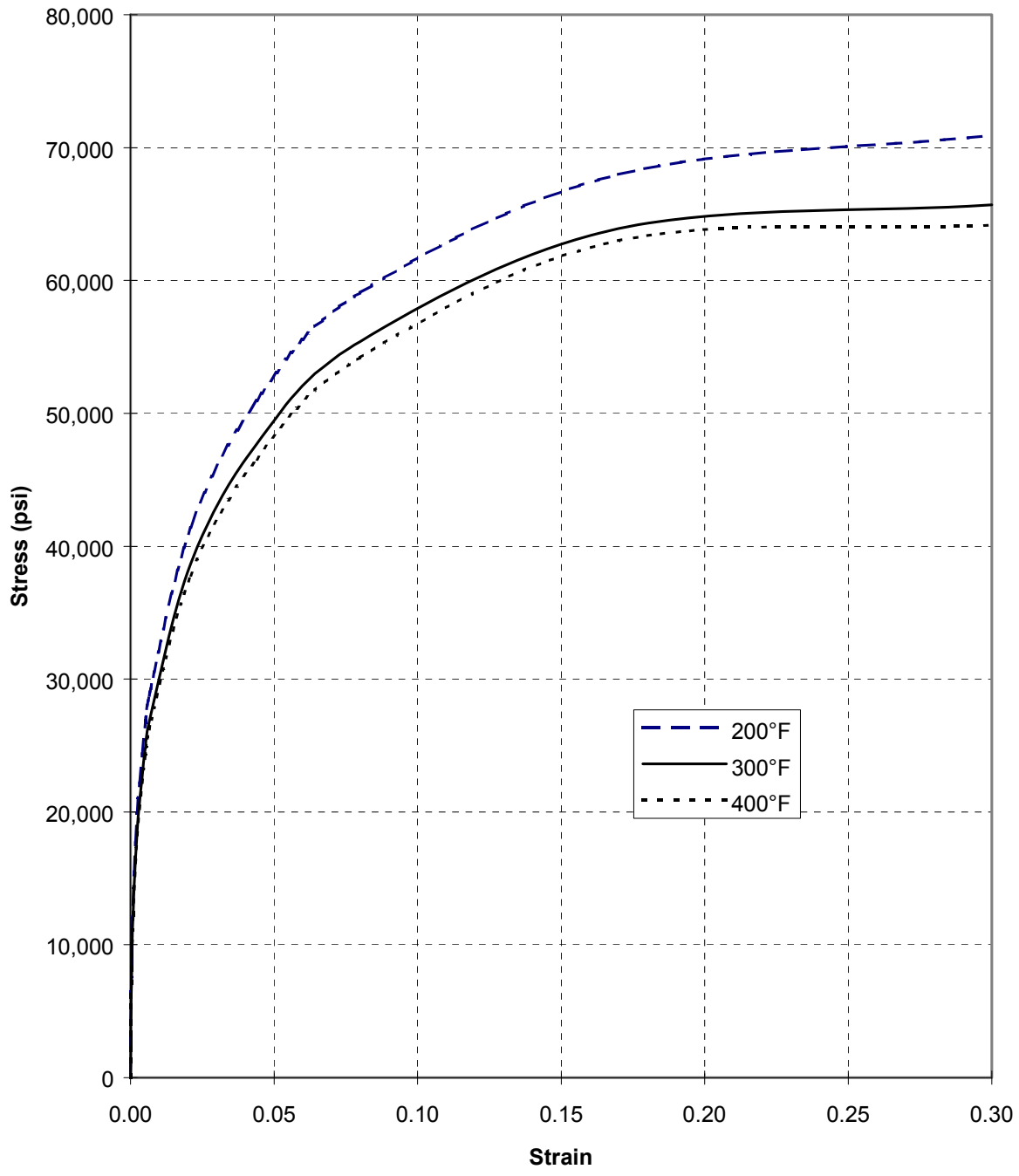

Figure 3.3-1 - Type 304 Stainless Steel Elastic-Plastic Stress-Strain Curve for Transfer Cask Plastic Instability Analysis

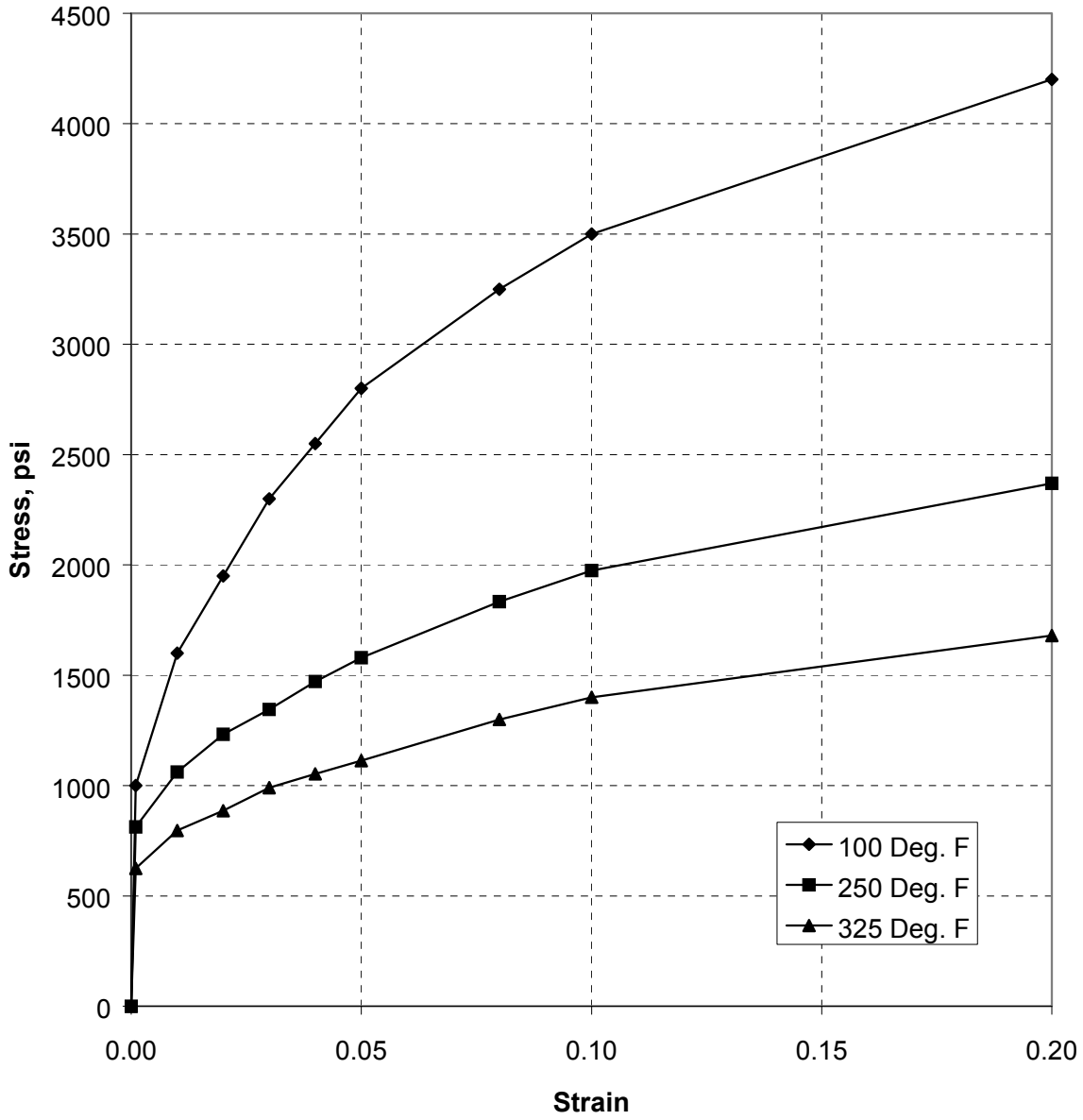

Figure 3.3-2 - Dynamic Elastic-Plastic Stress-Strain Curve for Transfer Cask Lead

3.4 General Standards for Casks

3.4.1 Chemical and Galvanic Reactions

The FuelSolutions™ storage cask and transfer cask have been evaluated to determine that the materials of construction will not cause significant chemical, galvanic, or other reactions in the intended service conditions. Chemical, galvanic, and other reactions in storage cask and transfer cask are discussed in the following sections.

3.4.1.1 Storage Cask

No significant chemical, galvanic, or other reactions are expected for the FuelSolutions™ storage cask considering its materials of construction and intended service conditions. The storage cask is constructed with reinforced concrete, coated carbon steel, and austenitic stainless steel. During the on-site storage service of the storage cask, the cask exterior concrete is exposed to the environment while inside the storage cask is predominately dry and warm. The carbon steel components of the storage cask, i.e., the liner, top cover, non-load bearing guide rails, tie rod tubes, and air inlet and outlet liners, are all protected with long lasting temperature- and radiation-resistant coatings. Due to substantial variation in corrosion rates of coated carbon steel, storage sites located in coastal or industrial environments should evaluate the need to apply a top coat on a site-specific basis. The thermal shield is made of aluminum and the canister support pipes are made from austenitic stainless steel. All these components are highly resistant to oxidization/corrosion.

The dissimilar materials of the storage cask which are in direct contact with one another include the concrete, carbon steel liner, and reinforcing steel. Portland cement concrete provides an environment which protects the steel liner and reinforcing steel from corrosion. The high alkaline environment (pH>12.5) in concrete results in the formation of a tightly adhering film (gamma iron (III) oxides) which passivates the steel and thereby protects it from corrosion due to penetration of chloride ions. That, together with the heavy reinforcement which minimizes shrinkage cracking and the concrete cover provided to protect the reinforcement, assures maximum service life. In addition, the external concrete surface degradation is mitigated by using a weather-resistant protective coating.

The only contact between the canister assembly and the storage cask occurs at the external surface of the canister shell and the storage cask guide rails and bottom end support pipes. All exposed surfaces of the canister shell are austenitic stainless steel. The support pipes on which the canister rests are also made from austenitic stainless steel. The surfaces of the storage cask support rails which contact the canister are faced with Nitronic-60 sheet. Prolonged use of stainless steel in contact with stainless steel or inorganic zinc-coated carbon steel produces no significant chemical, galvanic, or other reaction.

3.4.1.2 Transfer Cask

No significant chemical, galvanic, or other reactions are expected for the FuelSolutions™ transfer cask considering its materials of construction and intended service conditions. The transfer cask is constructed with austenitic stainless steel, lead, and solid neutron shielding material. In addition, water fills a stainless steel jacket surrounding the cask. The transfer cask

service environment includes short duration exposure to the spent fuel pool environment and long-term exposure to the on-site meteorological conditions. All exposed surfaces of the transfer cask are austenitic stainless steel which has a long history of non-galvanic behavior under similar service. Stainless steel quickly forms a protective passive film in these environments and its general corrosion rate drops to very low levels. Austenitic stainless steels in direct contact with lead have been used in similar casks for over 30 years and have not shown any degradation.

3.4.2 Positive Closure

The FuelSolutions™ storage cask cannot be inadvertently opened. The storage cask top cover consists of a heavy steel plate which is attached to the storage cask using twelve structural bolts. Following placement of the storage cask cover, a lock wire is installed over one or more of the top cover bolts. Failure of the lock wire would indicate deliberate tampering.

3.4.3 Lifting Devices

The FuelSolutions™ storage and transfer casks include provisions for lifting associated with normal handling operations. The following subsections address structural adequacy of the lifting devices for both casks. The lifting of FuelSolutions™ canisters is addressed in the respective Canister Storage FSARs.

3.4.3.1 Storage Cask

The storage cask be lifted either from the top using four of the tie rods or from the bottom using four jacks and air pallets. The design load for the storage cask vertical lift is equal to the deadweight of the heaviest loaded storage cask plus an additional 5% for as-built uncertainties and 15% for dynamic effects, as discussed in Section 2.3.1.7. As shown in Section 3.2, the weight of the heaviest storage cask with canister is less than 335 kips.

In the case of the top end lift, spreader beams are used to assure that the load is evenly distributed between all four tie rods. The resulting maximum tensile force in each tie rod due to the vertical lift of the long storage cask is

$$F_{rod} = \frac{1.05 \cdot 1.15 \cdot 335}{4} = 101.2\text{kips}$$

This maximum tensile force in the tie rods due to the vertical lift is less than the tie rod minimum preload after the relaxation during storage (see Section 3.1.1.1). Therefore, under normal vertical lifting loads, the tie rod preload will maintain compression across the storage cask segment joints to assure that the segments remain engaged.

The storage cask may also be lifted from the bottom end using four jacks positioned inside the inlet vent openings. The total load supported by the jacks is $1.05 \cdot 1.15 \cdot 335 = 404.5\text{kips}$ as discussed above. It is conservatively assumed that the total lift load is supported by only two diametrically opposed jacks in the event of uneven jacking. Therefore, the maximum jack load is 202.3 kips. Using the ACI 349 requirements for bearing loads, the concrete allowable bearing stress is calculated to be $\phi(2 \cdot 0.85 f_c') = 0.7 \cdot (2 \cdot 0.85 \cdot 5) = 5.95$ ksi and the necessary bearing area is 34.0 in^2. Consequently, each jack is fitted with a bearing plate of this or larger area.

Whether the cask is lifted from the top or from the bottom, the bottom slab must be adequate to support the weight of the canister. The canister weight used in this evaluation also includes the uncertainty and dynamic load increases of 5% and 15%.

The bottom punch-through shear due to its own and the canister weights is calculated based on net shear area under the cask liner (the area of air inlet penetrations is subtracted). This stress is calculated to be 27 psi and is much lower than the concrete allowable shear of $\phi 2\sqrt{f'_c}$ =120 psi.

The bottom bending moment at the interface with the cask wall is determined using the formulae for annular plate fixed at the outer edge and loaded by the uniform pressure. The maximum moment exists at the edge and is determined to be 52.0 in-kips/ft. This applied moment is substantially lower than the radial moment capacity of the cask bottom, which is calculated (using the radial reinforcement) as ϕM_n = 765 in-kips/ft.

Therefore, the cask bottom is adequate to support the basket load during lifting operations.

3.4.3.2 Transfer Cask

The transfer cask includes two integral lifting trunnions which are located near the top end and used to lift the transfer cask vertically. The requirements of NUREG-0612 and ANSI-N14.6 for critical lifts are applied to these trunnions and their attachment welds because they are used for critical lifts within the plant's fuel building, as described in Section 3.1.2.2.1. The critical lift load is defined as the maximum weight of the transfer cask and contents plus an additional factor of 15% to account for the dynamic effects as described in Section 2.3.1.7.

The stresses in the upper trunnions are calculated for two conditions: 1) vertical lift of the heaviest wet loaded transfer cask from the spent fuel pool at a design temperature of 150°F and 2) vertical lift of the heaviest dry loaded transfer cask within the fuel building at a design temperature of 300°F. As shown in Section 3.2, the maximum transfer cask weights for the vertical lift conditions are 199.4 kips for the lift from the fuel pool and 193.0 kips for the lift of the dry loaded transfer cask. Bounding design loads are taken as 210 kips for the vertical lift from the fuel pool and 200 kips for the vertical lift of the dry loaded transfer cask. With the 15% allowance for dynamic effects, the respective loads for two cases are 120.75 kips and 115 kips per trunnion.

The transfer cask is designed to be lifted vertically using a lifting yoke which engages either the inner 12.8 inch diameter trunnion shanks or outer 8.0 inch diameter trunnion shanks, as shown in Figure 3.5-6. The limiting condition considered in the structural evaluation is the vertical lift by the outer trunnion shanks. This condition produces higher stresses in the trunnions and transfer cask body since the moment arm and the resulting bending moments are maximized. The stresses calculated for this condition bound those resulting from a vertical lift by the inner trunnion shanks.

The maximum calculated stresses in the upper trunnion for the vertical lift conditions are determined using classical closed form solutions. The average shear stress and bending stress in the upper trunnion are calculated at each of the sections shown in Table 3.4-1 as follows:

$$f_v = \frac{V}{A} = \frac{P}{\left(\pi D^2 / 4\right)} \qquad f_b = \frac{M}{S} = \frac{P \cdot e}{\left(\pi D^3 / 32\right)}$$

where:

P = 120.75 kips, Vertical lift from fuel pool

= 115 kips, Vertical lift of dry loaded cask

D = Diameter of upper trunnion section

= 8.0 in (Section A1), 12.75 in (Section A2), and 20.0 in (Section A3)

e = Moment arm from load to stress section

= 1.63 in (Section A1), 5.38 in (Section A2), and 10.07 in (Section A3)

The results and their comparison to the corresponding allowable stresses are summarized in Table 3.4-1. It can be seen that the trunnions meet all ANSI N14.6 requirements for non-redundant lifting devices. The results also show that the minimum design margins result from vertical lift of the dry loaded transfer cask. This condition controls despite the lower design loads due to the lower material strength at the higher design temperature. As shown in Table 3.4-1, the minimum design margin in the upper trunnion for the vertical lift is +0.09 (for shear stress at section A1, e.g., base of the outer shank).

The primary stresses in the upper trunnion attachment welds due to the vertical lift load are determined using hand calculations. The upper trunnion attachment weld stresses are calculated assuming the entire lift load is supported only by the structural shell attachment weld, conservatively neglecting the support provided by the inner liner attachment weld. The maximum weld stress due to bounding lift load of 120.75 kips is determined as follows:

$$f_r = \frac{\sigma}{2} + \sqrt{\left(\frac{\sigma}{2}\right)^2 + \tau^2} = \frac{V}{2A_w} + \sqrt{\left(\frac{V}{2A_w}\right)^2 + \left(\frac{M}{S_w}\right)^2} = 3.70\,\text{ksi}$$

where:

σ = Stress normal to weld throat

τ = Shear on weld throat

V = 120.75 kips, Load producing σ

M = 1,291 in-kips, Moment producing τ

A_w = Weld area

= $\pi d t_{eff} = 88.0\ \text{in}^2$

S_w = Weld section modulus

= $\pi d^2 t_{eff}/4 = 440\ \text{in}^3$

t_{eff} = $\sqrt{1.25^2 + 0.625^2} = 1.40\text{in}$, Effective throat for a groove weld with a minimum throat of 1-¼ inch and a 5/8 inch cover

The allowable weld stress, based on the lesser of $S_y/6$ or $S_u/10$, is 3.75 ksi for SA-240, Type 304 stainless steel at a bounding temperature of 300°F. Therefore, the minimum design margin for the upper trunnion attachment weld is +0.014.

The evaluation of the transfer cask inner liner and structural shell stresses in the regions of the upper lifting trunnions employs finite element analysis and is addressed in Section 3.5.3.3.2.

The transfer cask top cover is lifted by four attachment points on the top surface. The full weight of the top cover (4,414 pounds) and the ram access cover (752 pounds) are assumed to be supported by two lifting attachments, thus, providing redundancy of the load path. The design load for each attachment of the top cover lifting device is 2,600 pounds plus the 15% increase for crane hoist motion, or 2,990 pounds. The lifting slings and attachments which thread into the transfer cask top cover are designed with minimum factors of safety of 5 against ultimate in accordance with the requirements of NUREG 0612 for redundant lifting devices. The standard lifting slings and eyebolts used to handle the top cover are rated for the specified design load and have a minimum safety factor of 5 in accordance with ANSI/ASME B30.9.[17]

3.4.4 Storage and Transfer Cask Service Life

The term of the 10CFR72, Subpart L C of C granted by the NRC is 20 years. Nonetheless, the FuelSolutions™ W150 Storage Cask is designed for 100 years of service and the FuelSolutions™ W100 Transfer Cask is designed for 40 years of service while satisfying the conservative design requirements defined in Chapter 2 of this FSAR, including the regulatory requirements of 10CFR72. In addition, the storage cask and transfer cask are designed, fabricated and inspected under the comprehensive Quality Assurance Program discussed in Chapter 13 of this FSAR and in accordance with the applicable requirements of the ACI and ASME Codes. This assures high design margins, high quality fabrication, and verification of compliance through rigorous inspection and testing as described in Chapter 9 of this FSAR. *Technical specifications* defined in Chapter 12 of this FSAR assure that the integrity of the cask and the contained canister are maintained throughout the components service life. The service life of the FuelSolutions™ canister is discussed in each FuelSolutions™ Canister Storage FSAR. The service life of the storage cask and transfer cask are discussed further in the following sections.

3.4.4.1 Storage Cask

The principal design considerations which bear on the adequacy of the FuelSolutions™ W150 Storage Cask for the design basis service life are addressed as follows:

<u>*Exposure to Environmental Effects*</u>

Thermal gradients resulting from the SNF decay heat and fluctuations in the ambient temperature and isolation cause sustained forces and moments in the storage cask reinforced concrete wall section over time. The resulting creep deformations tend to relieve such stresses in reinforced concrete. Creep effects for the storage cask are evaluated and found to be insignificant, as discussed in Section 3.1.1.1 of this FSAR. As discussed in Chapter 9 of this FSAR, the aggregates, cement and water used in the storage cask concrete are carefully controlled to provide high durability and resistance to weathering. The configuration of the storage cask and the low water-cement ratio used provide added resistance to freeze-thaw degradation. The controlled environment of the ISFSI storage pad mitigates damage due to salts for ice removal or

[17] ANSI/ASME B30-9, *Slings*, American Society of Mechanical Engineers, New York, 1984

direct exposure to damaging chemicals which may be present in other industrial applications. In addition, the storage cask is specifically designed for a full range of enveloping design basis natural phenomena which could occur over the 100-year service life of the storage cask as defined in Section 2.3.4 and evaluated in Chapter 11 of this FSAR.

Material Degradation

The relatively low neutron flux to which the storage cask is subjected does not result in significant degradation of the cask's material properties or impair its intended safety function. The reinforced concrete of the storage cask is not subject to corrosion because the reinforcing steel has adequate concrete cover in accordance with the requirements of ACI 349. Any storage cask materials which come into contact with the canister, such as the canister support pipes and support rails, are coated or fabricated from corrosion resistant stainless steel. The storage cask tie rods are fabricated from high strength corrosion-resistant steel and are accessible to verify tensioning. Exposed carbon steel components, such as the storage cask cover, are coated and accessible for re-coating if necessary. Exposed carbon steel components, such as the storage cask liner, which are not readily accessible are coated and not relied upon structurally. The controlled environment of the ISFSI storage pad mitigates damage due to direct exposure to corrosive chemicals which may be present in other industrial applications.

Maintenance and Inspection Provisions

The requirements for periodic inspection and maintenance of the storage cask throughout the 100-year service life are defined in Chapter 9 of this FSAR. These requirements include provisions for routine inspection of the storage cask exterior and periodic inspection of the storage cask interior for damage as well as visual verification that the ventilation flow paths of the storage cask are free and clear of debris. ISFSIs located in areas subject to atmospheric conditions which may degrade the storage cask or canister should be evaluated by the licensee on a site-specific basis to determine the frequency for such inspections to assure long term performance. In addition, the FuelSolutions™ Storage System is designed for easy retrieval of the canister from the storage cask, should it become necessary to perform more detailed inspections and repairs to the storage cask.

The above findings are consistent with those of the NRC's Waste Confidence Decision Review[18] which concluded that dry storage systems designed, fabricated, inspected and operated in accordance with such requirements are adequate for a 100-year service life while satisfying the requirements of 10CFR72.

3.4.4.2 Transfer Cask

The principal design considerations which bear on the adequacy of the FuelSolutions™ W100 Transfer Cask for the design basis service life are addressed as follows:

Exposure to Environmental Effects

All transfer cask materials that come in contact with the spent fuel pool are fabricated from austenitic stainless steel, as described in Section 3.1.1.2. The exposed surfaces of the transfer

[18] *Nuclear Regulatory Commission 10 CFR Part 51 Waste Confidence Decision Review*, U.S. Nuclear Regulatory Commission, September 11, 1990.

cask are polished to facilitate decontamination. The transfer cask is designed for repeated normal condition handling operations with high factors safety, particularly for the lifting trunnions, to assure structural integrity. The resulting cyclic loading will not lead to a fatigue failure of the transfer cask. All other off-normal or postulated accident conditions are infrequent or one time occurrences which do not contribute significantly to fatigue. The effects of fatigue on the transfer cask are specifically evaluated for a 40-year service life in Section 3.5.3.3.5 and is shown to meet the applicable requirements of the ASME Code. In addition, the transfer cask uses materials which are not susceptible to brittle fracture during extreme cold conditions, as discussed in Section 3.1.2.2.2.

Material Degradation

All transfer cask materials that are susceptible to corrosion are fabricated from corrosion resistant austenitic stainless steel, as described in Section 3.1.1.2. The controlled environment in which the transfer cask is used mitigates damage due to direct exposure to corrosive chemicals which may be present in other industrial applications. The infrequent use and relatively low neutron flux to which the transfer cask materials is subjected do not result in radiation embrittlement or degradation of the cask's shielding materials which could impair the transfers cask's intended safety function. The transfer cask materials are selected for durability and wear resistance when subjected to repeated use consistent with their intended function. The canister rails are fabricated from material which is typically used for bushings and bearings and protect the inner liner of the transfer cask from damage during horizontal canister transfer. Similarly, protective sleeves are used for the trunnions to prevent damage to the load bearing components during repeated handling operations.

Maintenance and Inspection Provisions

The requirements for periodic inspection and maintenance of the transfer cask throughout the 40-year service life are defined in Chapter 9 of this FSAR. These requirements include provisions for routine inspection of the transfer cask for damage prior to each use. In addition, an annual inspection of the lifting trunnions is required. Precautions are taken during operations to protect the sealing surfaces of the bottom cover and flange. The leak tightness of the liquid neutron shied is verified periodically. Inserts are used for all cover plate bolts to mitigate galling caused by repeated bolt installation and removal. The quick connect fittings used can be easily removed and replaced.

Stainless steel is susceptible to "weeping" after repeated exposure to contamination. These effects can be minimized by maintaining the smooth surface finish on the cask to facilitate more thorough decontamination after each use, maintaining the cleanliness of the spent fuel pool during canister loading operations, and minimizing the time that the transfer cask is immersed in the spent fuel pool. Should decontamination of the transfer cask become increasingly difficult after many exposures to the spent fuel pool, electro-polishing can be performed or the neutron shield jacket can be removed and replaced.

Table 3.4-1 - Transfer Cask Lifting Trunnion Stresses

Trunnion Section	Stress Type	Vertical Lift of Wet Transfer Cask from Fuel Pool			Vertical Lift of Dry Loaded Transfer Cask		
		Stress (ksi)	Allow. Stress (ksi)(1)	Design Margin(2)	Stress (ksi)	Allow. Stress (ksi)(1)	Design Margin(2)
A1	Shear	2.4	3.2	0.33	2.3	2.5	0.09
	Bending	3.9	5.3	0.36	3.7	4.2	0.14
A2	Shear	0.9	3.2	2.55	0.9	2.5	1.78
	Bending	3.2	5.3	0.66	3.0	4.2	0.40
A3(3)	Shear	0.4	3.2	7.00	0.4	2.5	5.25
	Bending	1.5	5.3	2.53	1.5	4.2	1.80

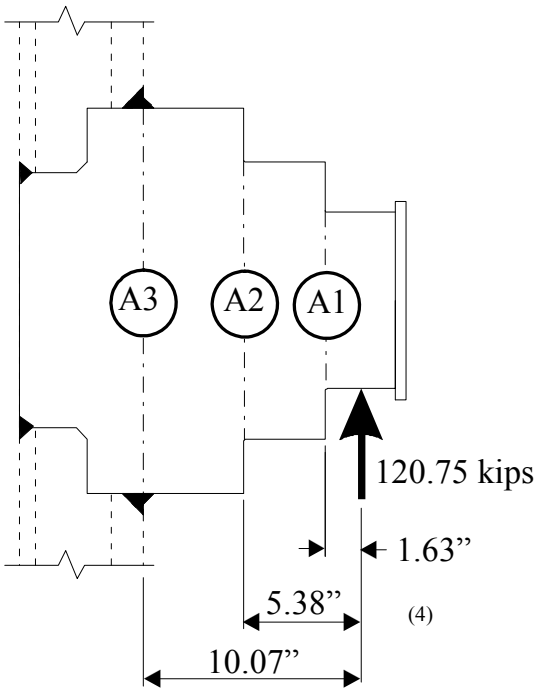

Notes:

(1) Allowable stresses are conservatively based on material properties at temperature of 300°F.

(2) Design margin is equal to (Allowable/Stress) - 1.

(3) See Section 3.4.3.2 for trunnion to shell weld stress evaluation.

(4) Moment arm is measured from center of outer shank to section.

3.5 Evaluation of Normal Condition Loadings

This section presents the structural evaluation of the FuelSolutions™ storage cask and transfer cask for loadings associated with system operation under normal conditions. The loads associated with these conditions include dead weight, live loads, normal handling loads, and thermal loads corresponding to normal operating temperatures. The normal operating load conditions which apply to the storage and transfer casks are described in Section 2.3.1. The structural evaluations for all normal operating condition loadings are presented in Section 3.5.3 for the storage cask and Section 3.5.3.3 for the transfer cask. Load combinations are addressed in Sections 3.5.3.1.3 and 3.5.3.3.6.

3.5.1 Summary of Pressures and Temperatures

The storage cask and transfer cask temperatures for normal thermal environments are determined in Chapter 4 of this FSAR and summarized in this section. Three normal ambient conditions are evaluated for transfer and storage:

1. *Lifetime Average Ambient Condition*: An ambient temperature of 77°F, normal insolation provided in Table 2.3-2, and the maximum decay heat load generated by the canister contents.
2. *Normal Cold Ambient Condition*: An ambient temperature of 0°F, no insolation, and maximum decay heat load generated by the canister contents.
3. *Normal Hot Ambient Condition*: An ambient temperature of 100°F, normal insolation provided in Table 2.3-2, and maximum decay heat load generated by the canister contents.

The storage cask temperatures used to perform the structural calculations for normal conditions are summarized in Tables 4.4-5 through 4.4-8. The case with the highest temperature gradient is selected for the structural analysis.

For the transfer cask, several normal condition cases are considered in the structural evaluation. The temperatures for these cases are summarized in Table 4.4-12. These temperatures are used to determine the appropriate elastic steel properties and elastic-plastic lead properties in the transfer cask drop evaluation presented in Section 3.7.5.

The storage cask and transfer cask are not pressure retaining components. The transfer cask bottom cover includes provisions for a seal used to retain water in the cavity for canister loading operations. The hydrostatic pressure on the cask due to the water in the cask cavity combined with the maximum cask annulus seal pressure does not cause any significant stresses and, consequently, is neglected. The transfer cask neutron shield jacket may be subjected pressures ranging from external hydrostatic pressure of 15 psig (when the shield is empty and the cask is immersed into the fuel pool) to internal pressure of 45 psig (when the shield is in place and reaches the maximum allowable temperature).

3.5.2 Differential Thermal Expansion

The storage cask and transfer cask are designed with sufficient cavity clearance to allow the canister to expand freely in all directions. The nominal axial and diametral clearances provided in the storage cask are 0.75 inch and 0.8 inch, respectively. The respective nominal axial and

diametral clearances provided in the transfer cask are 0.55 inch and 1.0 inch. When subjected to thermal loads, the canister and the casks will expand.

The differential thermal expansion of the canister and the storage cask is calculated using the temperature differential between the two components at the hottest axial section (as summarized in Table 3.5-1). From that table, the greatest difference between the canister shell temperature and the cask liner shell temperature ($\Delta T = 351°F$) exists for the off-normal cold condition (-40°F ambient) and the maximum linear heat generation rate. The differential thermal expansion is evaluated based on the hottest section temperatures because this conservatively assumes that this ΔT exists along the entire cask cavity. For further conservatism, the canister shell temperature is taken as the higher bound value of 400°F and the storage cask liner temperature is taken as the lower bound value of 0°F. The maximum axial (δ_a) and diametral (δ_d) differential expansions based on these bounding temperatures are:

$$\delta_a = L[\alpha_s(T_s - 70) - \alpha_{sc}(T_{sc} - 70)] = 0.67\text{inch}$$

$$\delta_d = D[\alpha_s(T_s - 70) - \alpha_{sc}(T_{sc} - 70)] = 0.23\text{inch}$$

where:

α_s = 9.2×10^{-6} in/in/°F, mean coefficient of thermal expansion of SA-240, Type 316 stainless steel at 400°F (obtained from the canister FSARs)

α_{sc} = 6.5×10^{-6} in/in/°F, mean coefficient of thermal expansion of A-36 at 0°F

L = 192.25 inch, maximum length of long canister shell

D = 66.0 inch, diameter of canister shell

T_s = 400°F, upper bound maximum temperature of the canister shell

T_{sc} = 0°F, lower bound maximum temperature of the cask liner

Therefore, the conservatively calculated minimum axial and diametral clearances between the storage cask cavity and canister are 0.12 inch and 0.57 inch, respectively. The storage cask clearances are sufficient to allow free thermal expansion of the canister for normal and off-normal storage thermal conditions.

The most limiting case for differential thermal expansion of the canister and the transfer cask shell is established using the temperature differential between the two components at the hottest axial section (as summarized in Table 3.5-1). From the table, the greatest difference between the canister shell temperature and the cask inner shell temperature ($\Delta T = 313°F$) exists for the off-normal cold condition (-40°F ambient) and the maximum total heat generation rate. The differential thermal expansion for this condition is evaluated based on the average temperatures of the canister shell and inner liner. These average temperatures are determined (using the axial temperature profiles shown in Figure 4.5-9) to be 467°F and 210°F for the canister shell and transfer cask liner, respectively.

The maximum axial (δ_a) and diametral (δ_d) differential expansions based on a bounding shell temperature are:

$$\delta_a = L[\alpha_s(T_s - 70) - \alpha_{tc}(T_{tc} - 70)] = 0.47\text{inch}$$

$$\delta_d = D[\alpha_s(T_s - 70) - \alpha_c(T_c - 70)] = 0.16\text{inch}$$

where:

α_s = 9.30 x 10^{-6} in/in/°F, mean coefficient of thermal expansion of SA-240, Type 316 stainless steel at 467°F (obtained from the canister FSARs)

α_{tc} = 8.81 x 10^{-6} in/in/°F, mean coefficient of thermal expansion of SA-240, Type 304 stainless steel at 210°F

L = 192.25 inch, maximum length of long canister shell

D = 66.0 inch, diameter of canister shell

T_s = 467°F, average temperature of the canister shell

T_c = 210°F, average temperature of the transfer cask inner shell

Therefore, the minimum axial and diametral clearances between the transfer cask cavity and canister are 0.08 inch and 0.84 inch, respectively. The transfer cask allows free radial thermal expansion of the canister shell for normal transfer conditions.

The thermal expansion of each FuelSolutions™ canister internals is evaluated in the respective FuelSolutions™ canister storage FSARs and shown to be less than the available clearances.

The stress analyses of the storage cask and transfer cask for normal thermal loads are presented in Sections 3.5.3 and 3.5.3.3, respectively.

3.5.3 Stress Calculations

3.5.3.1 Storage Cask

3.5.3.1.1 Analytical Approach

The FuelSolutions™ storage cask is evaluated using a combination of the finite element analyses and hand calculations. The hand calculations are performed in accordance with the ACI 349 Code and are used for determination of the minimum reinforcement requirements (see Table 3.1-3), section capacities, evaluation of the tie rod anchor points, etc. In addition, hand calculations are used for the evaluations of several storage cask features designed for specific loading conditions, such as horizontal transfer of the canister. The storage cask concrete forces and moments, as well as the steel component stresses, due to the required load combinations are calculated using the ANSYS 5.4 finite element model described below.

Overview of the Storage Cask Model

A half-symmetry model (180°) of the storage cask includes the concrete segments, the steel liner segments with bottom plate and top ring, the tie rods, and the top cover plate. Key features of the model also include air inlet and outlet openings and the joints between the three cask segments, including shear keys at the segment interfaces. The three concrete cask segments are clamped in the longitudinal direction by the pre-tensioned tie rods. The canister and its contents are included

as line loads applied to the steel liner at the support rail locations in the horizontal orientation and to the liner bottom plate at the support pipe locations in the vertical orientation. The guide rails and various shielding components are not explicitly modeled, but their mass effects are incorporated into the effective density of the cask liner. The finite element model is shown in Figure 3.5-1.

The concrete segments are modeled using linear 3-D brick elements (ANSYS SOLID45). The liner shell, top ring, bottom plate, and top cover are modeled using linear 3-D shell elements (ANSYS SHELL63). The interface between the concrete segments is represented by 3-D nonlinear point-to-point gap elements (ANSYS CONTAC52), oriented normal to the concrete face. The tie rods are modeled using linear uniaxial tension-compression elements (ANSYS LINK8) with initial preload. The tie rod nodes are attached to the concrete only at the end anchor points. Preload forces in the tie rods are developed by providing an initial strain as an input parameter. The initial preload is included in all load combinations.

The storage cask model boundary conditions simulate the actual support in either vertical or horizontal orientation. For the vertical orientation, the cask is assumed to be fully supported at the bottom in the vertical direction. For the horizontal orientation, the storage cask is supported by the J-skid frame at the saddle locations along its length (see Figure 1.2-22).

The steel liner nodes are coupled in the radial direction with corresponding nodes located on the inside face of the concrete wall. In addition, the liner is coupled in the longitudinal direction with the inside concrete face nodes at the liner shear lug locations.

The steel liner bottom plate is coupled with the concrete bottom slab in the longitudinal direction. The outer edge of the top cover plate is coupled with the top end shield ring at the bolt locations in the longitudinal direction only, conservatively assuming that the oversized bolt holes allow no in-plane resistance.

Since the model is nonlinear (contains nonlinear gap elements at the interfaces) each load combination discussed in Section 3.5.3.1.3 is analyzed separately by including all appropriate load factors and applying all loads, including temperature (if applicable), simultaneously for that load combination.

Reinforced Concrete Evaluation

For each factored load combination, linearized stresses through the concrete cross-section in the hoop and longitudinal directions are extracted using the POST1 linearization capability of ANSYS.

The locations of points for force and moment calculations in the concrete segments of the storage cask are identified in Figure 3.5-2. Twenty-two axial sections are considered with 14 circumferential locations evaluated at each axial section of the reinforced concrete shell. The selected longitudinal and circumferential locations are sufficient to capture the most highly stressed locations in the storage cask. To perform the structural evaluation of the concrete segments using ACI 349 criteria, axial forces, shear forces, and bending moments through the concrete wall thickness are computed using linearized membrane, shear and bending stresses obtained from the finite element analyses.

The reinforced concrete circumferential and longitudinal shear forces are calculated on the per foot basis and compared against the section shear allowable from Table 3.1-2.

The circumferential and longitudinal normal force and bending moment at each cask section are combined by calculating the total stress in the tension reinforcement. For the concrete sections with tensile force, concrete is assumed to resist compression only and all tension is resisted by the reinforcement. The reinforcement stress is determined as:

$$f_{s,t} = \frac{T}{A_s + A'_s}$$

where:

T = tensile force, kips/ft

$A_s + A'_s$ = total area of steel normal to the section face, in^2/ft

For concrete sections with compressive force, the load is resisted by the gross concrete section and strain compatibility is used to determine the corresponding compressive stress in the steel.

The reinforcement stress is determined as:

$$f_{s,c} = E_s \cdot \varepsilon = E_s \cdot \frac{C}{A_g E_c}$$

where

C = the compressive force, kips/ft

Es and Ec = the moduli of elasticity of steel and concrete, respectively

Ag = the gross area of the concrete section

The steel stresses due to bending moment is conservatively calculated as (see ACI 349):

$$f_{s,b} = \frac{M}{A_s \cdot \left(d - {A_s f_y}/{1.7 f'_c b} \right)}$$

where:

M = the bending moment, kip-in/ft

A_s = the area of tension steel, in^2/ft

f_y = 60 ksi is the reinforcement yield strength

f'_c = 5000 psi is the compressive strength of concrete

b = 12” is the nominal width of the section (1 foot)

Structural Steel Evaluation

In addition to the storage cask concrete sections, maximum stresses are obtained for the top cover plate, top end shield ring, the steel liner cylindrical shell, and the liner bottom plate. The liner welds are evaluated by determining all nodal forces and moments at the weld locations and resolving them into the weld shear stresses. The shear lugs are evaluated by obtaining the reaction force at the liner nodes coupled with the concrete segments in the longitudinal direction. Tie rod forces are also extracted from the analysis for structural evaluation of the tie rods. The

individual normal condition loads are discussed in the following sections. The load combination and analysis results are summarized in Section 3.5.3.1.3.

3.5.3.1.2 Storage Cask Individual Loads for Normal Conditions

Dead Weight Load

The storage cask is evaluated for dead weight loads in the vertical orientation (D_v) and horizontal orientation (D_h). The dead weight is introduced by applying the 1*g* gravitational acceleration to all storage cask components modeled as described in Section 3.5.3.1.1.

For the vertical orientation, the storage cask is supported at the bottom and the gravity load is applied downward in the axial direction. The weight of the canister and its contents is included as line loads applied to the liner bottom plate at the support pipe locations.

For the horizontal orientation, the storage cask is supported along its length by the J-skid saddles (see Figure 1.2-22). The gravity load is applied to the cask body laterally in the direction of this support. The canister and its contents are included as line loads applied to the steel liner at the support rail locations.

The weight of the storage cask used for dead weight evaluation includes the heaviest canister in the corresponding orientation.

Live Loads

The storage cask is evaluated for all live loads encountered during normal operation, as discussed in Section 2.3.1. Normal live loads include those associated with routine snow, rain and ice as well as those resulting from normal handling during loading operations. These loads are separated into four categories: snow and ice load, transfer cask load during vertical transfer of the canister, handling loads during uprighting/downending of the cask, and horizontal canister transfer loads. These loads are designated as L_1 though L_4 and are described below.

1. *Load L_1* - dead weight of the snow and ice on top of the storage cask. A bounding design pressure of 101 psf is calculated in Section 2.3.4.8 and applied to the storage cask top surface in vertical orientation. Load L_1 is applicable only to the storage conditions.
2. *Load L_2* - dead weight of the loaded transfer cask placed on top of the storage cask. This vertical load is calculated based on the transfer cask bounding weight of 200,000 pounds. This load is identified as L_2 and applied as a line load around the top end shield ring surface.
3. *Load L_3* - 15% increase of the dead weight due to dynamic nature of uprighting/downending process. The canister weight (increased by 15%) is also included. The load is applied similar to the dead weight as discussed above.
4. *Load L_4* - the hydraulic ram normal load of 45,000 pounds applied to the storage cask axially during the horizontal canister transfer. This load is transmitted via friction to the canister support rails and then transferred through the rail attachments to the steel liner and further through the liner embedments to concrete.

   The ram normal force is less than the transfer cask weight of 200,000 pounds. Therefore, for concrete and liner shear lugs, this load is bounded by the load L_2 discussed above and does not need to be considered in the load combinations. However, the liner bottom segment anchorage to the cask concrete is not addressed by the load combinations because the load

combinations only include downward axial loads resisted by bearing at the storage cask bottom. Therefore, the liner anchorage to the cask bottom is separately analyzed for the factored pullout load of $1.7L_4$. Only two out of four anchors are assumed to resist the hydraulic ram force and the factored load is calculated to be 1.7 × (45 / 2) = 38.3 kips. Using this load, the concrete and tension anchor analysis is performed in accordance with Appendix B of ACI 349 and the attachment weld analysis (not covered by ACI 349) uses the allowable stresses of AISC. All elements of the anchorage are found adequate to withstand the design load, with the lowest safety margin of 13% existing in the weld attaching the anchor to the liner bottom. As required by ACI 349, Appendix B, the design is governed by steel to assure ductile behavior of the anchor.

The rail attachments are also evaluated for the load L_4. The shear force in the bolts connecting top and bottom of the canister support rails is calculated to be 3.75 kips versus the allowable of 9.0 kips. The shear stress in the weld attaching the rails to the liner is 1.1 ksi versus the corresponding normal condition allowable of 21 ksi.

Normal Thermal

The storage cask internal forces and moments due to differential thermal expansion are based on temperatures obtained from the Chapter 4 thermal analysis at 162 pre-determined key points. The nodal temperature distribution in the entire model is obtained by interpolation between the key point values. Two normal condition cases are considered:

1. *Vertical orientation (T_v)* - steady-state vertical condition with the full heat load of 28 kW and normal air flow. Comparison of the storage cask temperature gradients using the data presented in Tables 4.4-7, 4.4-8, 4.5-2, and 4.5-4 indicates that the highest temperature gradients in the storage cask exist for the maximum heat load (Q_{max}) and 125°F ambient conditions with maximum insolation. Although this condition is off-normal, it is conservatively used for both normal and off-normal load combinations.
2. *Horizontal orientation (T_h)* - temperature distribution in the storage cask with the full heat load of 28 kW after 25 hours in horizontal orientation (with reduced air flow). This condition is conservative for this orientation because the canister thermal conditions would require the storage cask to be upended and allowed to cool down if the canister transfer is not completed prior to reaching the temperatures used herein.

3.5.3.1.3 Storage Cask Load Combinations

The storage cask is evaluated for the load combinations of NUREG-1536, as discussed in Section 2.3.5.1 and summarized in Tables 2.3-6 and 2.3-7. These load combinations are separated to consider both vertical and horizontal orientation of the storage cask with the applicable loading. The analyzed normal condition load combinations include only the bounding loads, i.e., the live loads are taken as the transfer cask weight (L_2) for the vertical orientation and the handling load (L_3) for the horizontal orientation. Load L_1 is inconsequential and L_4 is bounded by L_2, as discussed in Section 3.5.3.1.2.

Although not required by Table 2.3-7, the steel component stresses are conservatively calculated using the factored loads because the finite element model includes both the concrete and steel components of the storage cask.

The normal load combinations for the storage cask reinforced concrete body and steel components are summarized in Table 3.5-2 and Table 3.5-3, respectively. The results of the storage cask structural evaluation demonstrate that the applicable design criteria are satisfied for all normal operating conditions. All design margins, including the storage cask tie rods, are at least +0.09 or above. It must be noted that the controlling design margin corresponds to the load combination that includes thermal loads. Since the thermal stresses are secondary (self-limiting), this relatively low design margin calculated using elastic analysis is not a concern.

In addition, the canister support pipes at the bottom of cask cavity are evaluated using the bounding canister weight of 82,000 lbs increased by 15% to account for handling loads. The analysis is performed using the classical formulas for a ring compressed by concentrated forces. The pipe maximum bending stress of 14.6 ksi is lower than the corresponding normal allowable of 18.8 ksi for Type 304 stainless steel pipes. Therefore, the pipes are adequate to support the heaviest FuelSolutions™ canister.

3.5.3.2 Storage Cask Impact Limiter Surface Under Normal Dead and Live Loads

As shown in Figure 1.2-21, the storage cask upending/downending operations occur over the impact limiter recessed into the ISFSI pad in the storage cask handling area. A description of the storage cask impact limiters is provided in Section 1.2.1.4.2 and on the drawings in Section 1.5.1.3.

The storage cask impact limiter surface must be adequate to support the normal dead and live loads of the cask and J-skid without crushing. The dead plus live load pressure on the impact limiter surface is transmitted through the J-skid beam flanges. This pressure is conservatively calculated based on the vertical orientation because it results in the minimum contact area and, therefore, maximum contact pressure on the impact limiter foam. The bounding storage cask and J-skid weights (335,000 pounds and 17,000 pounds, respectively) are used. As stated in Section 3.5.3.1.2, the live load accounts for the dynamic nature of the handling loads and is taken as 15% of the dead weight.

The resulting pressure is determined to be 99 psi, which is significantly lower than the selected polyurethane foam lower bound strength of 300 psi.[19] Therefore, the impact limiter surface can support the normal dead and live load of the storage cask and J-skid.

3.5.3.3 Transfer Cask

3.5.3.3.1 Dead Weight

The transfer cask stresses due to the dead weight of the transfer cask materials and payload (canister and contents) are evaluated and shown to satisfy the applicable structural criteria. Two dead weight conditions are evaluated including:

1. *Vertical Dead Weight*: The dry loaded transfer cask resting vertically on bottom end cover.
2. *Horizontal Dead Weight*: The dry loaded transfer cask secured horizontally on transfer skid/trailer by the upper and lower trunnions.

[19] *General Plastics Last-A-Foam® FR-3700 for Crash and Fire Protection of Nuclear Material Shipping Containers*, General Plastics Manufacturing Company, 1992.

The transfer cask vertical and horizontal dead weight structural evaluation are presented below.

Vertical Dead Weight

The transfer cask dead weight stresses with the cask oriented vertically are calculated using the axisymmetric finite element model shown in Figure 3.5-3. The axisymmetric model includes the transfer cask ram access cover, top flange, top cover, inner liner, structural shell, gamma shield, bottom flange, and bottom cover. The transfer cask body neutron shield and the top and bottom cover neutron shields are not included in the model since no structural credit is taken for these components. Their weight is taken into account by adjusting the density, as discussed below. The bolted connections between the cover plates and the top and bottom flanges are modeled using a combination of linear spar and gap elements. In addition, gap elements are used to model the non-linear interface between the lead gamma shield and the cask shell. The gap elements transfer only compressive loads across the interface and have no stiffness when open.

Linear elastic material properties for stainless steel and lead at the 300°F design temperature are applied to the model. The density and Poisson's ratio for stainless steel are modeled as 0.29 lb/in^3 and 0.3, respectively. For lead, a density of 0.41 lb/in^3 and Poisson's ratio of 0.43 are used. The densities of the ram access cover, top cover, structural shell, and bottom cover have been adjusted to account for the dead weight of those non-structural components associated with the neutron shields, which are not modeled.

The dead weight of the transfer cask payload is modeled as a uniform pressure load on the inner surface of the bottom cover. A bounding canister assembly weight of 85 kips is conservatively assumed for the vertical dead weight analysis. The self weight of the transfer cask is accounted for by applying a 1g vertical acceleration to the model. In the vertical orientation, the transfer cask is supported only at the bottom cover. Vertical displacement constraints are applied to the bottom cover nodes which contact the supporting surface.

The results of the transfer cask vertical dead weight static stress analysis show that the transfer cask stresses due to the vertical dead weight loading are insignificant. The maximum primary membrane and membrane plus bending stress intensities in the transfer cask due to vertical dead weight are 0.4 ksi and 0.7 ksi, respectively. These compare with the respective ASME code allowables of 18.7 ksi and 28.1 ksi at 400°F. Therefore, only the horizontal dead weight stresses are used in the cask load combinations.

Horizontal Dead Weight

The stresses in the transfer cask due to dead weight while oriented horizontally and secured on the transfer skid and trailer are determined using a combination of finite element analysis and hand calculations. The beam bending stresses in the transfer cask inner and structural shells are calculated assuming that the transfer cask inner liner and structural shell behave as a composite beam under a uniform line load with simple supports at the trunnion support locations. A bounding transfer cask weight of 200 kips is conservatively assumed. The resulting beam bending stress in the transfer cask inner liner and structural shell due to horizontal dead load are 0.26 ksi and 0.29 ksi, respectively. These stresses are classified as primary membrane.

In addition to the global beam bending behavior of the transfer cask shells, the local stresses in the structural shell regions near the upper and lower trunnions are evaluated. The maximum trunnion reaction loads for a bounding transfer cask weight of 194 kips are determined for the

range of transfer cask centers of gravity bounding those shown in Table 3.2-3. For a lower bound center of gravity of 101 inches, the upper and lower trunnion reaction loads are 48.3 kips/trunnion and 48.7 kips/trunnion, respectively. For the upper bound center of gravity of 106 inches, the upper and lower trunnion reaction loads are 51.4 kips/trunnion and 45.6 kips/trunnion, respectively. The transfer cask structural shell stresses are calculated for bounding trunnion reaction loads of 52.5 kips/trunnion.

The cask stresses in the region of the upper and lower trunnions are calculated using the half symmetry finite element models shown in Figure 3.5-4 and Figure 3.5-5. The analytical models represent the top and bottom halves of the transfer cask, respectively. The top end model includes the transfer cask ram access cover, top cover, inner liner, structural shell, upper trunnion, and all associated welds. The bottom half model includes the transfer cask bottom cover, bottom flange, inner liner, structural shell, and lower trunnion. The transfer cask body gamma neutron shields and the cover plate neutron shield are not included in the models since no structural credit is taken for these components. The models are both constructed entirely of solid brick elements. Linear elastic material properties at 300°F are applied to the models. In each model, a 52.5 kips horizontal deadweight reaction load is applied the bottom side of the trunnion shank which interfaces with the transfer skid. The stress results from the static analyses are summarized in Table 3.5-4. The highest overall stresses due to horizontal deadweight occur in the inner liner and structural shell near the junctions of the upper and lower trunnions. The results show that the maximum primary membrane and membrane plus bending stress intensities in the cask inner liner, structural shell, and trunnion attachment welds are 4.2 ksi and 7.1 ksi, respectively. The maximum peak stress intensity in the transfer cask due to horizontal deadweight is 10.7 ksi, occurring in the weld at the junction of the upper trunnion and structural shell. The maximum stresses are included in the transfer cask load combination evaluation discussed in Section 3.5.3.3.6.

3.5.3.3.2 Lifting and Handling

The transfer cask is evaluated for all loads associated with normal lifting and handling conditions. The loads considered encompass all lifting and handling operations within the fuel building and outside the fuel building on-site. The controlling lifting and handling conditions considered in the structural evaluation include:

- Vertical lifts inside the fuel building
- Transfer cask downending/upending operations for horizontal transfer
- On-site movement on transfer trailer
- Horizontal canister transfer
- Vertical canister transfer

The transfer cask is evaluated for each of these conditions in the following subsections and shown to meet the applicable structural design criteria. The maximum stresses are included in the transfer cask load combination evaluation discussed in Section 3.5.3.3.6.

Vertical Lift

The transfer cask includes two integral lifting trunnions located near the top end and used to lift the transfer cask in the vertical orientation. The transfer cask can be lifted vertically using a

lifting yoke which engages either the inner 12.75 inch diameter trunnion shanks or the outer 8.0 inch diameter trunnion shanks. The limiting condition considered in the structural evaluation is the vertical lift from the outer trunnion shanks. This condition produces higher stresses in the trunnions and cask body since the moment arm and the resulting bending moment are maximized. The stresses calculated for this condition bound those resulting from a vertical lift by the inner trunnion shanks. Two vertical lift conditions are considered in the structural evaluation:

1. *Vertical lift from the spent fuel pool*: As shown in Table 3.2-2, the maximum weight of the loaded transfer cask is 199.4 kips (99.7 kips per trunnion) and corresponds to the vertical lift from the spent fuel pool. A bounding design load of 210 kips (105 kips per trunnion) plus the 15% allowance for dynamic effects results in 241.5 kips (120.75 kips per trunnion) which is conservatively used in the analysis. The design temperature of the transfer cask for this condition is 150°F.
2. *Vertical lift of dry loaded transfer cask*: As shown in Table 3.2-3, the maximum weight of the dry loaded transfer cask is 193.0 kips (96.5 kips per trunnion). In this configuration, the loaded transfer cask is drained and the top cover and ram access cover are installed. A bounding design load of 200 kips (100 kips per trunnion) plus the 15% allowance for dynamic effects results in 230 kips (115 kips per trunnion) which is conservatively used in the analysis. The bounding design temperatures of 400°F for the inner liner and 300°F for the structural shell are conservatively used for this condition.

The transfer cask shell stresses due to the vertical lift design loads are determined using the transfer cask half symmetry finite element model described in Section 3.5.3.3.1 and shown in Figure 3.5-4. For the vertical lift from the spent fuel pool, the top cover and ram access cover elements and the closure bolt elements are removed from the model. The bounding vertical lift loads shown in Table 3.5-5 are applied to the trunnion outer shank in the region which interfaces with the lifting yoke. The resulting stresses are summarized in Table 3.5-6. The results show that the maximum primary membrane stress intensity of 5.4 ksi and the maximum membrane plus bending stress intensity of 15.0 ksi occur in the structural shell near the trunnions.

Evaluation of the upper trunnions and associated welds for the criteria of ANSI N14.6 is provided in Section 3.4.3.2.

<u>Downending</u>

For horizontal canister transfer operations, the loaded transfer cask is downended (rotated from vertical to horizontal) onto the transfer skid, as described in Section 1.2.1.4.2. Three loading conditions are evaluated for the downending operation:

1. *Initial engagement with transfer skid lower trunnion towers*: The transfer cask is engaged with the transfer skid by lowering the cask vertically until the lower trunnions are properly positioned in the transfer skid lower trunnion pillow blocks. Care is taken during this operation to assure that the lifting yoke remains positively engaged to the transfer cask upper trunnions and that excessive loading of the lower trunnions does not occur. This is achieved by maintaining a load on the crane to provide stability for the cask. In addition, the transfer cask lower trunnion offset from the cask centerline assures that the transfer cask rotates toward the transfer skid upper trunnion towers, thus, maintaining a relatively uniform distribution of the load between the upper and lower trunnions. However, it is conservatively assumed that for a short duration the lower trunnions support the full weight of the loaded

transfer cask at initial engagement. As shown in Table 3.2-3, the maximum weight of the dry loaded transfer cask is 193.0 kips. A design load of 200 kips (100 kips per lower trunnion) is assumed for the initial engagement.

2. *Downending, 45° angle*: Once the lower trunnions are properly engaged with the transfer skid, the transfer cask is gradually rotated into the horizontal position. The intermediate orientation at 45° with horizontal is evaluated based on the bounding cask weight of 200 kips plus an additional factor of 15% to account for possible inertial effects of crane hoist motion. The bounding load of 60 kips per trunnion is applied at 45° to the axes of the model.
3. *Downending, near horizontal*: The transfer cask is gradually downended until the upper trunnions engage the transfer skid upper trunnion pillow blocks. The design load used for this condition is equal to a bounding transfer cask weight of 200 kips plus an additional factor of 15% to account for possible inertial effects of crane hoist motion. The distribution of the handling loads to the upper and lower trunnions is equal to 1.15 times the horizontal dead weight trunnion reaction loads calculated in Section 3.5.3.3.1 which results in 56.0 kips per lower trunnion and 59.1 kips per upper trunnion. A bounding trunnion design load of 60 kips is conservatively used for both the upper and lower trunnions.

The transfer cask trunnion reaction loads for the downending handling conditions are summarized in Table 3.5-5.

The shear and bending stresses in the upper and lower trunnions due to the downending handling loads are evaluated using hand calculations. The maximum shear and bending stresses due to downending occur at the base of the upper trunnion lifting shank and are 1.2 ksi and 1.9 ksi, respectively. Therefore, large factors of safety are provided in the upper and lower trunnions for the downending handling conditions.

The stresses in the transfer cask due to the downending handling loads are evaluated using the transfer cask upper and lower half-symmetry finite element models described previously in Section 3.5.3.3.1. The lower trunnion reaction loads are applied to the lower trunnion region which interfaces with the transfer skid pillow block and the upper trunnion load are applied to the outer shanks in the region which interfaces with the lifting hook. Linear elastic static analyses are performed. The resulting stresses in the transfer cask inner liner and structural shell and trunnion attachment welds are summarized in

Table 3.5-6. The results show that the maximum primary membrane stress intensity due to downending of 4.9 ksi occurs in the inner liner near the upper trunnion when the transfer cask is nearly horizontal. The maximum membrane plus bending stress intensity in the transfer cask due to downending is 14.5 ksi, occurring in the structural shell near the lower trunnions upon initial engagement with the transfer skid.

On-Site Movement on Transfer Trailer

The transfer cask is hauled between the fuel building and ISFSI on the transfer skid and trailer, as described in Section 1.2.1.4.2. The loads associated with normal shock and vibration normally incident to onsite transfer, as defined in Section 2.3.1.7 of this FSAR, are evaluated below. For onsite movement of the transfer cask, bounding equivalent static accelerations of 2.0*g* in the vertical direction and 0.1*g* in both the transverse and longitudinal directions are conservatively used as design loads.

During onsite movement, the transfer cask is secured horizontally on the transfer skid. The upper and lower trunnions are both engaged with the skid pillow blocks on the inner shanks. The lower trunnion pillow blocks provide vertical and longitudinal restraint while the upper trunnion pillow blocks provide only vertical restraint. Lateral restraint is provided by the upper and lower trunnions on one side bearing against their respective skid towers. Bounding trunnion reaction loads are developed based upon the maximum weight of the dry loaded transfer cask in combination with the maximum range of package centers of gravity. As discussed in Section 3.5.3.3.1, the maximum upper and lower trunnion reaction loads for a 1*g* horizontal dead weight load are 51.4 kips and 48.7 kips, respectively. Therefore, the maximum upper and lower trunnion reaction loads for the 2*g* vertical vibration load are 102.8 kips and 97.4 kips. Similarly, the maximum upper and lower trunnion lateral reaction loads for a 0.1g transverse vibration load are 10.3 kips and 9.7 kips, respectively. The longitudinal reaction load on each lower trunnion is 9.7 kips. The bounding trunnion reaction loads used in the analysis are listed in Table 3.5-5.

The stresses in the upper and lower trunnions due to onsite transfer vibration loading are determined using hand calculations. The maximum shear stress due to the bounding vibration loads occurs at the base of the lower trunnions and is 0.8 ksi. The maximum bending stress due to the bounding vibration loads also occurs in the lower trunnion and is 1.3 ksi. These stresses are insignificant.

The transfer cask stresses in the regions of the upper and lower trunnions are determined using the half symmetry finite element models shown in Figure 3.5-4 and Figure 3.5-5, respectively. Bounding reaction loads are applied to the lower trunnion at the interface with the transfer skid lower trunnion pillow block, as shown in Figure 3.5-6**.**

The maximum stresses in the transfer cask inner liner and structural shell due to the on-site transfer peak vibration loads are summarized in Table 3.5-6. The maximum primary membrane stress intensity of 8.5 ksi occurs in the inner liner near the upper trunnion. The maximum membrane plus bending due to onsite transfer vibration is 16.4 ksi in the lower trunnion attachment weld.

Horizontal Canister Transfer

The transfer cask is evaluated for the loadings associated with normal and off-normal horizontal canister transfer operations. As discussed in Section 2.3.1.7, the normal horizontal canister transfer load is defined as a either a pushing or pulling ram load of 45 kips applied to top or bottom end of the canister.

The procedures for performing a horizontal canister transfer are outlined in Chapter 8 of this FSAR. Horizontal canister transfer operations are performed to move a canister from the transfer cask into the storage cask or retrieve a canister from the storage cask into the transfer cask. Prior to horizontal canister transfer operations, the transfer cask, secured horizontally on the transfer skid and trailer, is aligned and docked to the storage cask. Restraints are attached between the transfer cask lower trunnions and the storage cask docking collar to secure the casks together and provide a direct load path, as described in Section 1.2.1.4.2. To transfer a canister into the storage cask, the transfer cask ram access cover is removed and a ram, inserted through the ram access port, is used to push the canister from the transfer cask into the storage cask. The friction forces developed between the canister shell and the storage cask rails are transferred by the hydraulic ram to the mounting bracket bolted to the transfer cask top cover. The hydraulic ram

load is reacted by the cask restraints on the transfer cask lower trunnions. Alternatively, the horizontal transfer can be accomplished by mounting the hydraulic ram to the bottom end of the storage cask, inserting the ram through the opening in the bottom of the storage cask, and pulling the canister into the storage cask using a pintle plate bolted to the canister bottom end. For the transfer cask, this alternative is less severe since the friction force between the canister shell and transfer cask rails is reacted over the entire surface of the transfer cask bottom flange.

For canister retrieval operations, the hydraulic ram is mounted on the bottom end of the storage cask and the canister is pushed from the storage cask into the transfer cask. The friction forces developed between the canister shell and the transfer cask are reacted by the casks restraints attached to the transfer cask lower trunnions. The reaction loads on the transfer cask lower trunnions impose bending and shear forces on the trunnions and transfer cask structural shell. The lower trunnion and structural shell stresses due to the horizontal canister transfer condition are determined by scaling the stresses calculated earlier in this section for the initial lower trunnion engagement during downending and by accounting for the cask restraint extensions. The resulting stresses in the transfer cask structural shell are reported in Table 3.5-6. The maximum primary membrane and membrane plus bending stress intensities in the structural shell due to the horizontal canister transfer condition are 1.5 ksi and 5.1 ksi, respectively. The maximum shear and bending stresses in the lower trunnion are 0.3 ksi and 0.4 ksi.

Vertical Canister Transfer

The procedures for performing a vertical canister transfer are outlined in Chapter 8 of this FSAR. Two alternatives are provided for vertical canister transfer. The first alternative maintains positive engagement between the overhead crane and transfer cask during the entire canister transfer operation. This alternative uses a vertical lift fixture (as described in Section 1.2.1.4.3) to support the canister while positioning the transfer cask on top of the storage cask. The vertical lift fixture is then used to lower the canister into the storage cask. The loads acting on the transfer cask for this operation include only the transfer cask self weight. The weight of the canister is supported directly by the vertical lift fixture which is attached to the lifting yoke. Therefore, the transfer cask handling loads for this operation are bounded by those due to the dead weight described in Section 3.5.3.3.1.

Alternatively, the vertical transfer can be performed by lowering the canister from the transfer cask into the storage cask using the overhead crane, as described in Section 1.2.1.4.3. For this alternative, the weight of the canister is supported by the vertical lift fixture beam assembly mounted to the top end of the transfer cask until the transfer cask is positioned on top of the storage cask. Once the transfer cask is secured to the top of the storage cask, the yoke is disengaged from the transfer cask upper trunnions and removed from the crane hook. A lift extension link is then connected from the crane hook to the canister and used to lower the canister into the storage cask. The worst cask loads acting on the transfer cask during this vertical canister transfer operation occur prior to disconnecting the canister from the support beam mounted to the top of the transfer cask. For this condition, the transfer cask loads include the transfer cask self weight, the weight of the canister support beam, and the weight of the canister assembly. The bottom cover is not present during this operation. Based on Table 3.2-2, a bounding weight of 190 kips is conservatively assumed for the transfer cask, vertical lift fixture and canister assembly for the vertical canister transfer structural evaluation.

The stresses in the transfer cask shells due to the vertical canister transfer loading are determined by scaling the stresses calculated for the vertical lift of the wet loaded transfer cask by the ratio of loads (190/241.5 = 0.787). The maximum stresses in the transfer cask due to the vertical canister transfer condition are summarized in Table 3.5-6. The maximum primary membrane and membrane plus bending stress intensities are 4.2 ksi and 10.4 ksi, respectively, and exist in the structural shell. The maximum peak stress intensity in the transfer cask due to the vertical canister transfer loading is 14.4 ksi, occurring in the upper trunnion to structural shell weld.

3.5.3.3.3 Normal Thermal

As discussed in Section 3.5.1, the transfer cask is evaluated for the most limiting thermal gradients occurring during vertical handling inside the fuel building and during the three normal ambient conditions. Insolation is applied to the transfer cask for all normal thermal conditions with the exception of the normal cold condition and vertical handling. The transfer cask temperatures are calculated for the maximum canister decay heat load using a bounding heat generation profile, as discussed in Section 4.1.3. The transfer cask temperatures for each normal thermal condition are summarized in Table 4.4-12; the temperature points are indicated in Figure 4.4-20.

The transfer cask thermal stress analysis is performed using the axisymmetric finite element model shown in Figure 3.5-3 and discussed in Section 3.5.3.3.1, except the dead weight loads are replaced with the temperature distributions and the boundary conditions are changed to a rigid body motion restraint at one node. Temperature dependent material properties (E and α) are used in the model for stainless steel and lead.

As discussed in Section 3.1.2.2.1, transfer cask thermal stresses are evaluated in accordance with the requirements of ASME, Subsection NC.

General thermal stresses, classified as secondary stresses by the Code, are taken as the linearized membrane plus bending stress intensities at each section of the transfer cask. The maximum general thermal stress intensities in each to the transfer cask structural components are summarized in Table 3.5-7. The highest general thermal stress intensity due to normal thermal conditions is 30.6 ksi, occurring at mid-length of the transfer cask structural shell for the normal thermal condition. The thermal stresses are included in the transfer cask normal load combinations.

3.5.3.3.4 Pressure

The transfer cask is not a pressure vessel. The hydrostatic pressure in the fuel pool during loading is low and inconsequential. The only component that experiences a pressure load of any significance is the neutron shield jacket designed for the bounding pressure of 50 psig. Neglecting the stiffening ribs welded between the jacket and structural shell, the membrane stress in the jacket shell is

$$P_m = {pR}/{t} = {50 \cdot 42.5}/{0.25} = 8{,}500\text{psi}$$

where:

R = 42.5 in (jacket shell radius)

t = ¼ in (jacket shell thickness).

This stress is well below the corresponding allowable of 20 ksi for SA-240, Type 304 at 300°F. Due to the presence of ribs, the actual stress is expected to be much lower than the one calculated herein. For the same reason, buckling of the neutron shield jacket under the external hydrostatic pressure of 15 psig is not a concern.

3.5.3.3.5 Fatigue Evaluation

As stated in Section 3.1.2.2.2, the transfer cask is evaluated for fatigue using the criteria of AMSE, Section III, Subsection NC. This evaluation is performed by applying the six Condition B criteria of the Article NC-3219.2 as discussed below.

a) *The expected design number of full pressure cycles*. The transfer cask cavity does not serve as a pressure boundary. Only the liquid neutron shield jacket is designed to withstand internal pressure. Using the data in Appendix I, the alternating stress for Type 304 stainless steel at the conservative temperature of 500°F is found to be $S_a = 3S_m = 3 \cdot 17.5 = 52.5$ ksi and the corresponding number of cycles is 20,000. The transfer cask design life is 40 years with the maximum number of canister transfers estimated at 25 per year. Therefore, the neutron shield jacket will see only $40 \cdot 25 = 1{,}000$ full-range cycles. This is much less than the Code value of 20,000, hence, the first criterion is satisfied.

b) *The expected design range of pressure cycles during normal service.* Similar to (a) above, only the liquid neutron shield jacket is designed to withstand internal pressure. During the canister transfer operations, the design range of pressure cycle can be conservatively defined to be from -15 psi (static head pressure of 35 feet of pool water when the jacket is empty) to the bounding internal design pressure of +50 psi. Therefore, the design pressure range during normal service is 65 psi.

The number of loading operations over the cask lifetime is 1,000, as determined above. Based on the number of cycles of 10^6, the significant pressure fluctuation range is calculated as 27 psi. Conservatively assuming that there are four significant pressure fluctuations during each loading, the total number of significant fluctuations is $1{,}000 \cdot 4 = 4{,}000$. The S_a value corresponding to this number of cycles is 80 ksi and the respective allowable range is $\frac{1}{3} \cdot \text{Design Pressure} \cdot \left(\frac{S_a}{S_m}\right) = \frac{1}{3} \cdot 50 \cdot \left(\frac{80}{17.5}\right) = 76$ psi. The design range of 65 psi is below this value and, therefore, the second criterion is satisfied.

c) *The temperature difference between any two adjacent points*. The specified number of startup and shutdown cycles is 1,000 as determined above. Based on that value and the material property data, the quantity of $S_a / 2E\alpha$ is calculated as 233°F. Under no condition does the temperature difference between any adjacent points approach this value. Therefore, the fourth criterion is satisfied.

d) *The range of temperature difference between any two adjacent points.* The range of temperature difference between any two adjacent points does not change during normal service by more than 233°F calculated above. Any changes in the cask temperature are relatively slow and gradual due to its large thermal capacity and absence of rapid changes in the external conditions.

e) *Temperature difference - dissimilar materials*. All transfer cask components are fabricated from Type 304, F304, and F304N stainless steel. The moduli of elasticity and coefficients of thermal expansion are the same for all these materials. As such, the fifth criterion is satisfied.

f) *Mechanical Loading*. The transfer cask mechanical loading is associated with handling loads. For each loading cycle, the number of significant mechanical loadings can be conservatively estimated as 5 lift/setdowns + 5 significant vibrations + 3 upending/downendings + 3 canister transfers for the total of 16. The total lifetime number of cycles is, then, 16 · 1,000 = 16,000 and the S_a value for this number of cycles is 58.1 ksi. As shown in Table 3.5-8, the total stress intensity at any point of the transfer cask does not exceed 55.3 ksi. Therefore, this criterion is also satisfied.

3.5.3.3.6 Transfer Cask Load Combinations and Comparison with Allowable Stresses

The transfer cask is evaluated for the load combinations in accordance with ANSI/ANS 57.9,[20] as summarized in Section 2.3.5.2 and Table 2.3-8. The transfer cask load combination stress evaluation is conservatively performed by combining the maximum transfer cask component stress intensities due to each individual load condition irrespective of sign and location. The transfer cask maximum stresses due to the controlling normal transfer and storage conditions are summarized in Table 3.5-7. The resulting transfer cask normal condition load combination stress intensities are reported in Table 3.5-8. The load combination stress results demonstrate that the transfer cask has significant design margin for all normal transfer and operating conditions. The minimum design margin in the transfer cask for combined normal loading is +9% for the primary plus secondary stress intensity in the structural shell.

3.5.4 Cold Ambient Conditions

The FuelSolutions™ storage cask and transfer cask have been evaluated for the effects of an extreme cold ambient condition with no internal decay heat load. The evaluation considers the effects of extreme cold temperatures on the material properties and the potential for freezing of the transfer cask liquid neutron shield.

As discussed in Section 3.1.2, brittle fracture of the transfer and storage cask components is not a concern due to the selection of materials with the adequate fracture toughness.

The effects of an extreme off-normal cold ambient temperature combined with maximum decay heat load are evaluated for the storage cask in Section 3.6.1.1 of this FSAR. The results of the storage cask off-normal cold thermal stress evaluation demonstrate that the storage cask will continue to perform its intended safety functions under these conditions. The effects of extreme cold ambient conditions combined with a lower decay heat load produce lower stresses in the storage cask since the temperature gradients are a function of the decay heat load. For the condition with zero decay heat load, the storage cask has a uniform temperature equal to the ambient temperature, hence, it remains stress free.

[20] ANSI/ANS-57.9, *Design Criteria for an Independent Spent Fuel Storage Installation (Dry Type)*, American National Standards Institute, 1984.

The storage cask does not include any liquid shields which could potentially freeze under extreme cold conditions. The joints between the concrete segments are filled with grout to prevent the intrusion of water which could potentially freeze. In addition, the storage cask outlet vents are angled downward to prevent water from entering the storage cask cavity. Therefore, the storage cask is not affected by the freezing of liquids under extreme cold conditions.

The transfer cask is evaluated for the effects of an extreme off-normal cold ambient temperature of -40°F combined with the maximum canister decay heat load in Section 3.6.1.2. For extreme cold conditions with zero canister decay heat load, the temperature of the transfer cask is uniform throughout. The only stresses in the transfer cask for this condition result from differential thermal expansion of the steel inner liner and the lead gamma shield. Due to the difference in coefficients of thermal expansion, the lead contracts more than the stainless steel inner liner at cold temperatures. The stresses resulting from this condition are not significant since the lead is a relatively weak material and cannot sustain large stresses, especially under gradual loading such as that due to changes in ambient temperature.

The transfer cask includes a liquid neutron shield (demineralized water). As described in Section 1.2.1.2, cask temperatures are monitored to assure that the neutron shield does not freeze during cold conditions.

Table 3.5-1 - Storage and Transfer Cask Temperatures for Thermal Expansion Evaluation

Component	Storage Cask Cases									
	Normal (Q_{max})			Normal ($LHGR_{max}$)			Off-Normal (Q_{max})		Off-Normal ($LHGR_{max}$)	
	0°F	77°F	100°F	0°F	77°F	100°F	-40°F	125°F	-40°F	125°F
Canister Shell	337	423	447	404	486	508	290	473	360	528
Cask Liner	61	169	197	58	165	195	12	228	9	225
ΔT	276	254	250	346	321	313	278	245	**351**	303

Component	Transfer Cask Cases							
	Normal (Q_{max})					Normal ($LHGR_{max}$)	Off-Normal (Q_{max})	
	Pool	Handling	0°F	77°F	100°F	100°F	-40°F	125°F
Canister Shell	531	613	586	612	619	667	576	626
Inner Shell	480	339	295	337	350	359	263	365
ΔT	51	274	291	275	269	308	**313**	261

Table 3.5-2 - Storage Cask Reinforced Concrete Evaluation Summary for Normal Load Combinations

Components	Load Combinations				Allowable[1]	Design Margin[2]
	$1.4D_v + 1.7L_2$	$1.4D_h + 1.7L_3$	$1.05D_v+1.275(L_2+T_v)$	$1.05D_h+1.275(L_3+T_h)$		
	Forces and stresses, kips/ft or ksi					
Concrete Hoop Reinforcement Stress	2.6	3.2	48.5	36.6	54	+0.11
Concrete Longitudinal Reinforcement Stress	3.3	3.6	23.7	26.0	54	+1.08
Concrete Bottom Radial Reinforcement Stress	1.1	1.1	12.2	13.6	54	+2.97
Concrete Hoop Shear Force (θR)	15.0	16.2	92.9	85.0	202.0	+1.17
Concrete Longitudinal Shear Force (zR)	15.0	15.7	32.4	46.4	192.3	+3.14
Shear Key Lateral Force	1.4	1.1	4.6	6.0	30.6	+4.10
Shear Lug Axial Force[3]	2.1	0.2	8.9	8.0	9.7	+0.09

Notes:

(1) The allowable stresses and forces are determined per Table 3.1-2.

(2) Design margin is equal to (Allowable/Stress) - 1.

(3) Shear lug axial forces are in kips/inch.

Table 3.5-3 - Storage Cask Structural Steel Component Evaluation Summary for Normal Load Combinations

Components	Load Combinations[1]				Allowable[2]	Design Margin[3]
	$1.4D_v + 1.7L_2$	$1.4D_h + 1.7L_3$	$1.05D_v+1.275(L_2+T_v)$	$1.05D_h+1.275(L_3+T_h)$		
	Stresses, ksi					
Liner Shell Membrane Plus Bending Stress	1.8	0.6	15.8	13.2	18.8	+0.19
Liner Shell Shear Stress	0.3	0.2	6.5	10.3	12.5	+0.21
Top Cover Membrane Plus Bending Stress	2.0	0.4	3.1	3.4	71.6	+20.1
Top Cover Shear Stress	0.1	0.1	0.3	0.5	38.2	+75.4
Liner Bottom Plate Membrane Stress	0.7	0.7	6.5	4.5	20.6	+2.17
Liner Bottom Plate Membrane Plus Bending Stress	1.1	0.8	14.8	14.1	25.8	+0.74
Liner Bottom Plate Shear Stress	0.1	0.2	1.2	1.1	13.8	+10.5
Liner Bottom Plate Weld Shear Stress	1.0	0.3	11.0	9.3	21	+0.91
Tie Rod Tension Force[4]	104.7	106.2	106.3	128.4	139.9	+0.09

Notes:

(1) Although not required, the steel component stresses are calculated using factored load combinations for concrete.

(2) The allowable stresses are determined per Table 3.1-4.

(3) Design margin is equal to (Allowable/Stress) - 1.

(4) Tie rod force is in kips.

Table 3.5-4 - Transfer Cask Shell Stress Summary for Horizontal Dead Weight

Shell Region	Stress Location	Stress Type	Max. S.I. (ksi)
Upper Trunnion	Structural Shell	P_m	1.80
		P_m+P_b	5.25
		P_m+P_b+Q+F	5.58
	Structural Shell to Trunnion Weld	P_m	2.45
		P_m+P_b	7.12
		P_m+P_b+Q+F	10.65
	Inner Liner	P_m	4.25
		P_m+P_b	5.03
		P_m+P_b+Q+F	5.05
	Inner Liner to Trunnion Weld	P_m	4.19
		P_m+P_b	4.56
		P_m+P_b+Q+F	4.61
Lower Trunnion	Structural Shell	P_m	1.67
		P_m+P_b	7.13
		P_m+P_b+Q+F	8.96
	Structural Shell to Trunnion Weld	P_m	1.48
		P_m+P_b	4.80
		P_m+P_b+Q+F	4.96

Table 3.5-5 - Trunnion Lifting and Handling Design Loads

Lifting or Handling Condition	Trunnion	Trunnion Reaction Loads[1] (kips/trunnion)		
		F_{LONG}	F_{TANG}	F_{RAD}
Vertical Lift From Fuel Pool	Upper	+120.75	0.00	0.00
	Lower	0.00	0.00	0.00
Vertical Lift of Dry Loaded Cask	Upper	+115.00	0.00	0.00
	Lower	0.00	0.00	0.00
Downending Initial Engagement	Upper	0.00	0.00	0.00
	Lower	+100.00	0.00	0.00
Downending 45° Angle	Upper	+42.43	+42.43	0.00
	Lower	+42.43	+42.43	0.00
Downending Horizontal	Upper	0.00	+60.00	0.00
	Lower	0.00	+60.00	0.00
On-Site Transfer Vibration Case 1	Upper	0.00	+105.00	-11.00
	Lower	+10.00	+100.00	-10.00
On-Site Transfer Vibration Case 2	Upper	0.00	+105.00	-11.00
	Lower	-10.00	+100.00	-10.00
Normal Horizontal Canister Transfer	Upper	0.00	0.00	0.00
	Lower	+22.50	0.00	0.00
Vertical Canister Transfer	Upper	+95.00	0.00	0.00
	Lower	0.00	0.00	0.00

Note:
(1) See Figure 3.5-6 for upper and lower trunnion load interface locations.

Table 3.5-6 - Transfer Cask Shell Lifting and Handling Stresses

Load Condition[1]	Stress Type	Upper Trunnion				Lower Trunnion	
		Struct Shell	Struct. Shell to Trunnion Weld[2]	Inner Liner	Inner Liner to Trunnion Weld[2]	Struct. Shell	Struct. Shell to Trunnion Weld[2]
Vertical Lift From Fuel Pool	P_m	5.37	4.75	4.52	5.27	(3)	
	P_m+P_b	13.15	12.86	6.43	6.48		
	P_m+P_b+Q+F	13.81	18.36	6.46	6.76		
Vertical Lift of Dry Loaded Transfer Cask	P_m	4.77	4.03	4.82	4.99	(3)	
	P_m+P_b	14.41	15.02	5.69	7.08		
	P_m+P_b+Q+F	15.60	21.36	5.71	7.34		
Downending Initial Engagement	P_m	(4)				4.27	3.64
	P_m+P_b					14.52	14.31
	P_m+P_b+Q+F					15.76	19.73
Downending 45° Angle	P_m	2.41	2.79	3.87	3.77	2.15	2.21
	P_m+P_b	6.80	8.31	4.52	4.21	6.93	8.72
	P_m+P_b+Q+F	7.10	11.71	4.54	4.25	7.06	11.47
Downending Horizontal	P_m	2.06	2.80	4.86	4.79	1.69	1.91
	P_m+P_b	6.00	8.14	5.74	5.21	5.49	8.15
	P_m+P_b+Q+F	6.37	12.17	5.77	5.27	5.67	10.24
Onsite Transfer Vibration	P_m	3.83	5.16	8.50	8.39	3.49	3.74
	P_m+P_b	11.15	15.15	10.05	9.12	10.33	16.37
	P_m+P_b+Q+F	11.84	22.66	10.10	9.22	10.47	20.57
Horizontal Canister Transfer	P_m	(4)				1.51	1.29
	P_m+P_b					5.13	5.06
	P_m+P_b+Q+F					5.57	6.97
Vertical Canister Transfer	P_m	4.22	3.74	3.56	4.15	(3)	
	P_m+P_b	10.35	10.12	5.06	5.10		
	P_m+P_b+Q+F	10.87	14.44	5.08	5.32		

Notes:

(1) See Table 3.5-5 for trunnion lifting and handling loads.

(2) The weld stresses reported here as primary actually include secondary effects, i.e., localized bending. The weld primary stresses due to lifting are discussed in Section 3.4.3.2.

(3) The lower trunnions are not loaded for these conditions. Consequently, the shell stresses in the region of the lower trunnions are not significant.

(4) The upper trunnions are not loaded for these conditions. Consequently, the shell stresses in the region of the upper trunnions are not significant.

Table 3.5-7 - Summary of Transfer Cask Maximum Stresses for Normal Conditions

Transfer Cask Component	Stress Type	Load Condition		
		Dead Weight (D)	Normal Live/ Handing[1] ($L+L_h$)	Normal Thermal (T)
Ram Access Cover	P_m	0.04	0.00	N/A
	P_m+P_b	0.26	3.52	N/A
	P_m+P_b+Q	0.37	3.52	0.94
Top Cover	P_m	0.04	0.00	N/A
	P_m+P_b	0.26	3.52	N/A
	P_m+P_b+Q	0.37	3.52	8.80
Top Flange	P_m	1.80	5.37	N/A
	P_m+P_b	7.13	14.52	N/A
	P_m+P_b+Q	8.96	15.76	16.72
Inner Liner	P_m	4.19	8.39	N/A
	P_m+P_b	4.56	9.12	N/A
	P_m+P_b+Q	4.61	9.22	30.52
Structural Shell (away from trunnions)	P_m	1.80	5.37	N/A
	P_m+P_b	7.13	14.52	N/A
	P_m+P_b+Q	8.96	15.76	30.56
Structural Shell (at upper trunnions)	P_m	2.45	5.16	N/A
	P_m+P_b	7.12	15.15	N/A
	P_m+P_b+Q	10.65	22.66	20.31
Structural Shell (at lower trunnions)	P_m	1.48	3.74	N/A
	P_m+P_b	4.80	16.37	N/A
	P_m+P_b+Q	4.96	20.57	20.41
Bottom Flange	P_m	1.8	5.37	N/A
	P_m+P_b	7.13	14.52	N/A
	P_m+P_b+Q	8.96	15.76	16.18
Bottom Cover	P_m	0.41	0.65	N/A
	P_m+P_b	0.74	3.00	N/A
	P_m+P_b+Q	0.74	3.18	8.15
Ram Access Cover Bolts	Shear	0.4	0.9	0.0
	Tension	0.0	5.1	27.2
Top Cover Bolts	Shear	0.2	0.4	0.0
	Tension	0.0	5.1	28.2
Bottom Cover Bolts	Shear	0.2	0.4	0.0
	Tension	0.0	5.1	29.1

Note:

(1) The normal handling stress results reported are bounding for all transfer cask normal handling conditions.

Table 3.5-8 - Transfer Cask Normal Operating Condition Load Combinations

Transfer Cask Component	Stress Type	Load Combination[1] Maximum Stress Intensities (ksi) 1 (DW + L+ T)	2 (DW + T + L+ L_h)	Allowable S.I.[2] (ksi)	Design Margin[3]
Ram Access Cover	P_m	0.04	0.04	20.0	Large
	P_m+P_b	0.26	3.78	30.0	6.94
	P_m+P_b+Q	1.31	4.83	60.0	11.4
Top Cover	P_m	0.04	0.04	20.0	Large
	P_m+P_b	0.26	3.78	30.0	6.94
	P_m+P_b+Q	9.17	12.69	60.0	3.73
Top Flange	P_m	1.80	7.17	20.0	1.79
	P_m+P_b	7.13	21.65	30.0	0.39
	P_m+P_b+Q	25.68	41.44	60.0	0.45
Inner Liner	P_m	4.19	12.58	18.7	0.49
	P_m+P_b	4.56	13.68	28.1	1.05
	P_m+P_b+Q	35.13	44.35	56.1	0.26
Structural Shell[4]	P_m	2.45	7.61	20.0	1.63
	P_m+P_b	7.13	22.27	30.0	0.35
	P_m+P_b+Q	39.52	55.28	60.0	0.09
Bottom Flange	P_m	1.80	7.17	20.0	1.79
	P_m+P_b	7.13	21.65	30.0	0.39
	P_m+P_b+Q	25.14	40.90	60.0	0.47
Bottom Cover	P_m	0.41	1.06	20.0	17.9
	P_m+P_b	0.74	3.74	30.0	7.02
	P_m+P_b+Q	8.89	12.07	60.0	3.97
Ram Access Cover Bolts	Shear	[5]	1.3	25.8	18.8
	Tension	[5]	32.3	62.5	0.94
	Combined[6]	[5]	0.27	1.0	2.70
Top Cover Bolts	Shear	[5]	0.6	25.8	42.0
	Tension	[5]	33.3	62.5	0.88
	Combined[6]	[5]	0.28	1.0	2.57
Bottom Cover Bolts	Shear	[5]	0.6	25.8	42.0
	Tension	[5]	34.2	62.5	0.83
	Combined[6]	[5]	0.30	1.0	2.33

Notes:

(1) Load combinations are defined as follows:
DW = Dead weight
T_n = Normal thermal
$L + L_h$ = Normal live/handling

(2) Allowable stress intensities are based on the material properties at 400°F for the inner liner and at 300°F for all other transfer cask components.

(3) Design margin is equal to (Allowable/Stress) - 1.

(4) Bounding stresses region of upper and lower trunnions and away from trunnions.

(5) Bounded by stresses due to load combination 2.

(6) For combined shear and tension, $(f_t^2/F_{tb}^2) + (f_v^2/F_{vb}^2) \leq 1.0$.

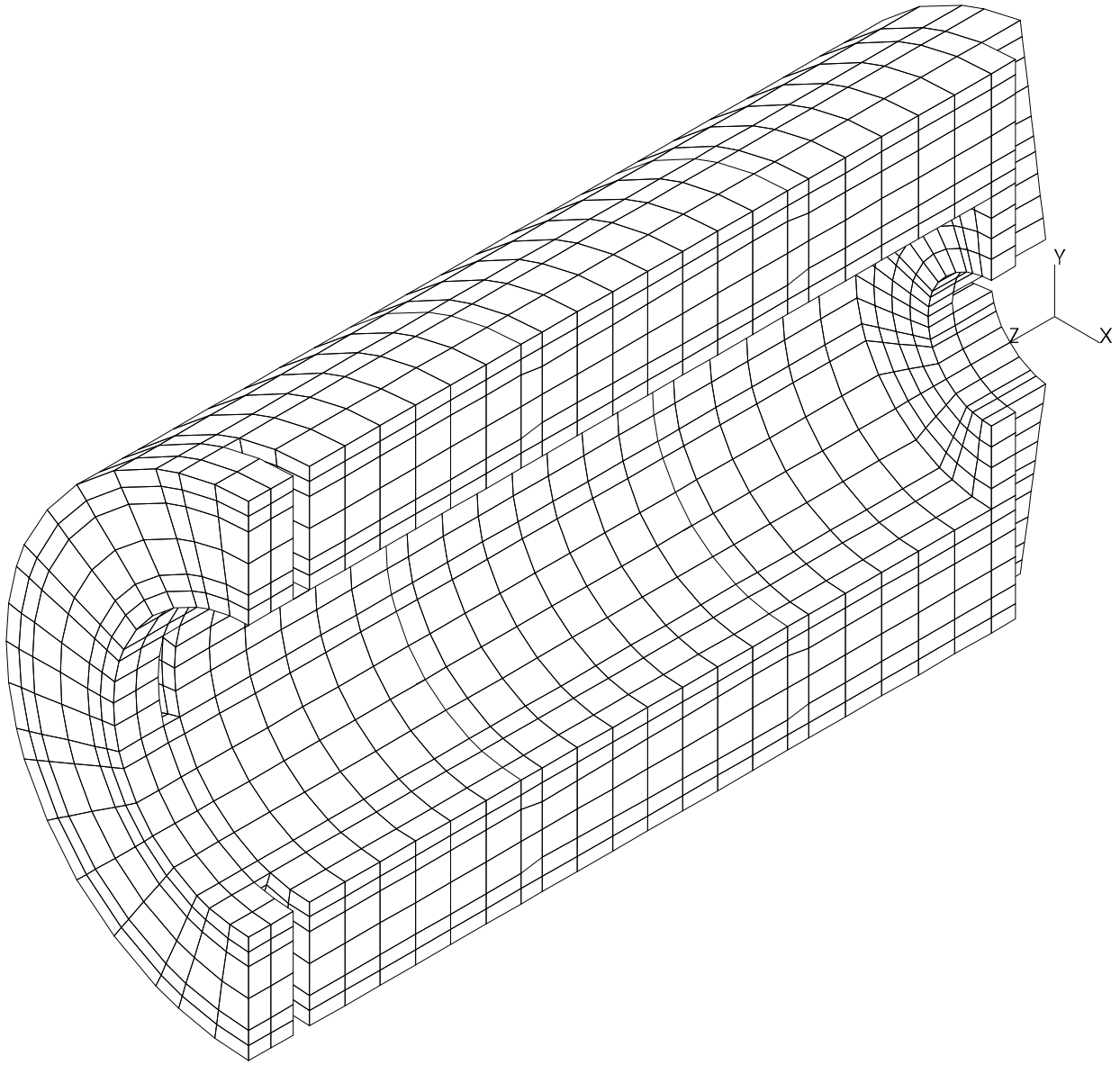

Figure 3.5-1 - ANSYS Finite Element Model of the FuelSolutions™ Storage Cask

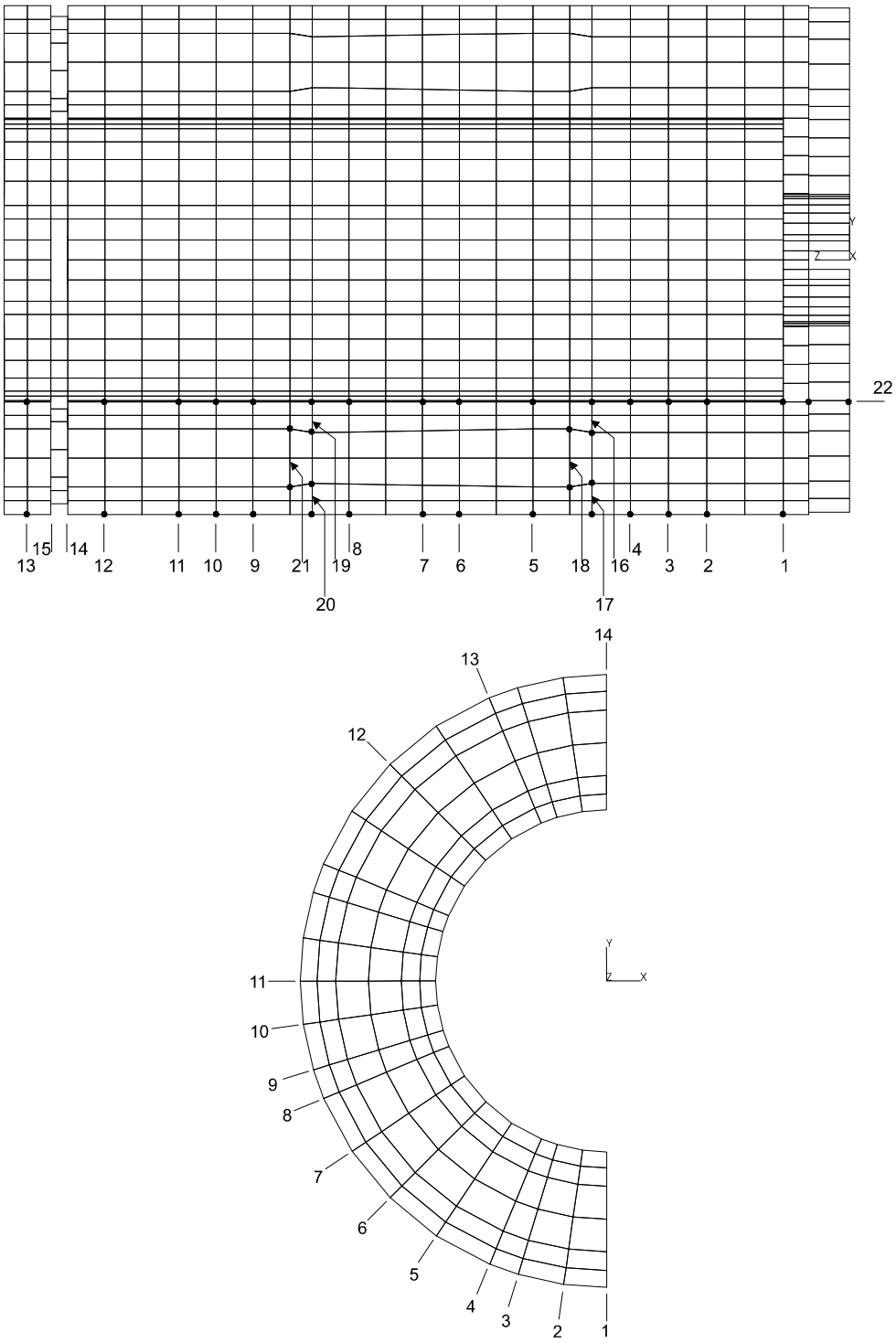

Figure 3.5-2 - Section Locations for Storage Cask Analysis

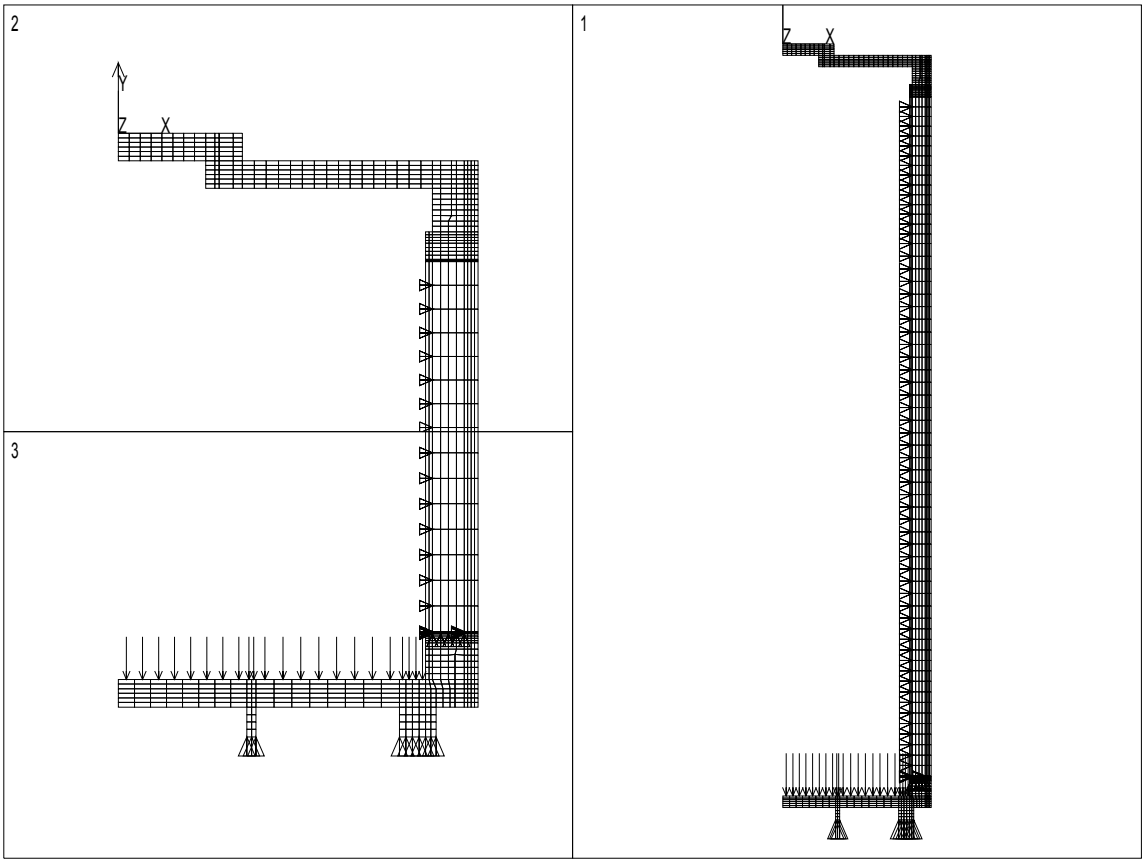

Figure 3.5-3 - Transfer Cask Axisymmetric Finite Element Model

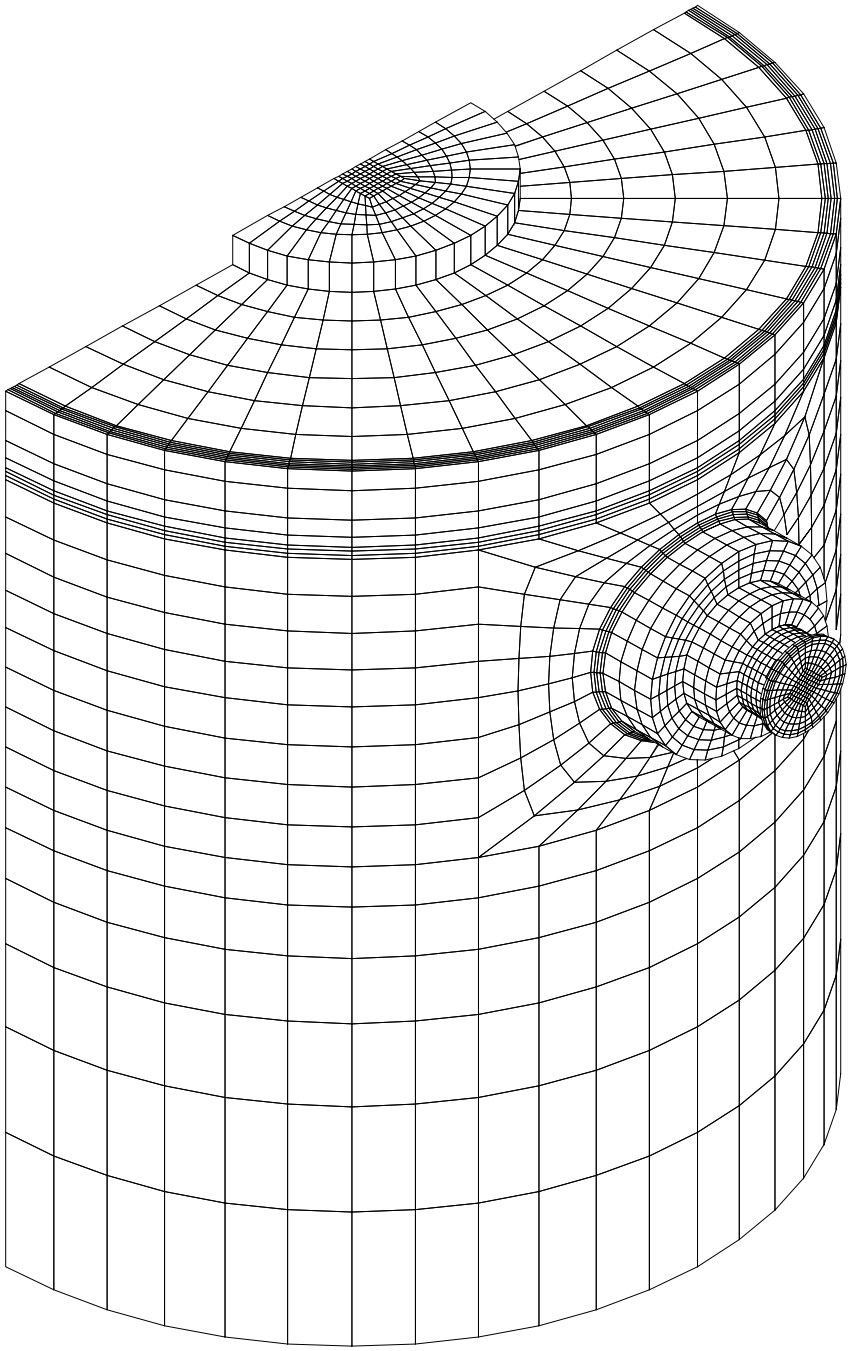

Figure 3.5-4 - Transfer Cask Upper End Finite Element Model

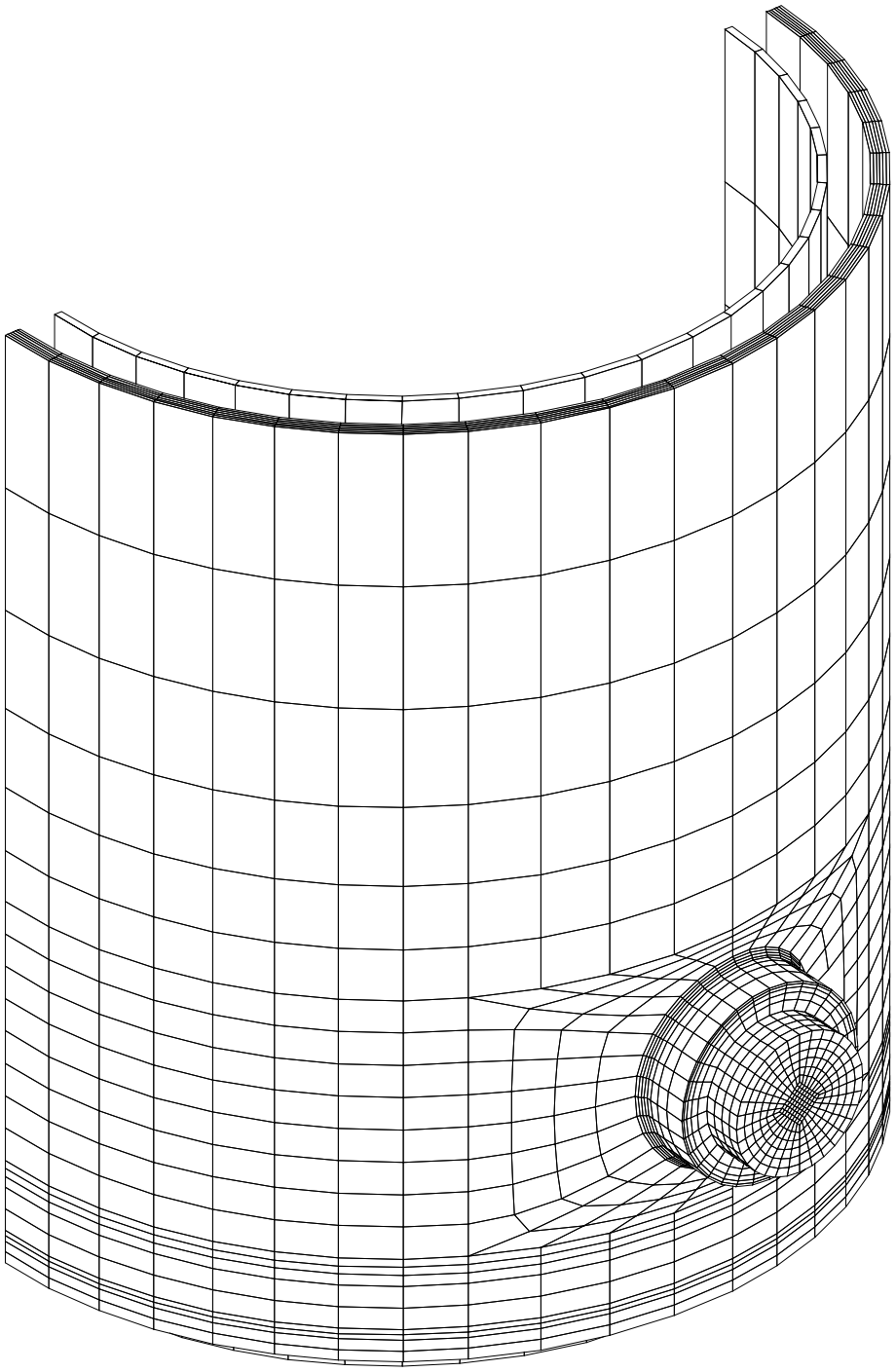

Figure 3.5-5 - Transfer Cask Lower End Finite Element Model

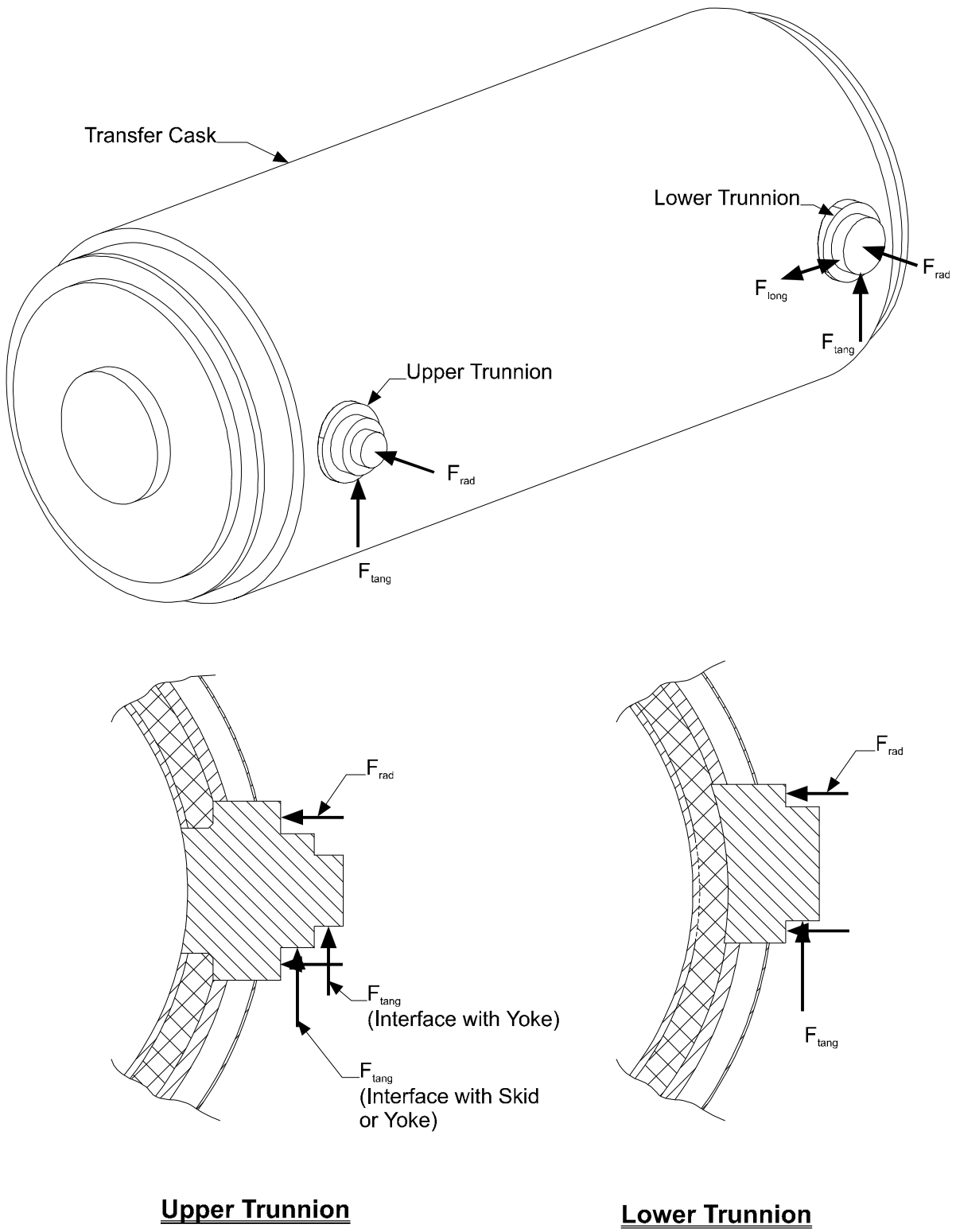

Figure 3.5-6 - Transfer Cask Interface Points for Handling Loads

3.6 Evaluation of Off-Normal Conditions

The FuelSolutions™ storage system is evaluated for all credible and significant design basis events resulting from off-normal operation, as defined in Section 2.3.2 of this FSAR. Off-normal conditions and events are defined in accordance with NUREG-1536 and ANSI/ANS-57.9 and include events which, although not occurring regularly, can be expected to occur with moderate frequency on the order of once a year.

3.6.1 Off-Normal Temperature and Insolation Loadings

3.6.1.1 Storage Cask

The storage cask off-normal thermal conditions include extreme cold and hot ambient temperatures as well as horizontal transfer of the canister when it takes an unusually long period of time. The storage cask load combinations include only the normal (T) and the accident (T_a) loadings. As discussed in Section 3.5.3.1.2, the normal thermal loads used in the cask evaluations are conservatively selected to bound both normal and off-normal conditions. Therefore, the extreme hot, cold, and off-normal horizontal transfer conditions are bounded by the normal load combinations.

Differential thermal expansion that occurs between the storage cask and the canister under the off-normal conditions is included in the analysis performed in Section 3.5.2.

3.6.1.2 Transfer Cask

Similar to the normal case, the structural evaluation of the transfer cask for off-normal thermal conditions is performed using the finite element model shown in Figure 3.5-3 of this FSAR. The analysis methodology, including the methodology for application of the thermal loads and calculation of resulting forces and stresses, is also as described in Section 3.5 of this FSAR. The transfer cask thermal stresses are determined for the following off-normal thermal conditions:

1. *Off-Normal Cold:* Ambient temperature of -40°F, no insolation.
2. *Off-Normal Hot:* Ambient temperature of 125°F, full insolation.

The resulting transfer cask general thermal stress intensities for the bounding off-normal thermal condition are provided in Table 3.6-1.

3.6.2 Wind Load

3.6.2.1 Storage Cask

The design basis wind load for the storage cask is included in the off-normal load combination. The load is conservatively based on the design tornado wind discussed in Section 2.3.4.2.2. The load combinations are discussed in Section 3.6.5 and presented in Table 3.6-2.

3.6.2.2 Transfer Cask

The transfer cask, while secured horizontally to the transfer skid/trailer, is evaluated for the effects of lateral pressure resulting from the design basis wind load. The design basis wind speed is converted into an equivalent pressure of 74 psf (0.514 psi) using the methodology of ASCE 7,

as discussed in Section 2.3.4.2. The transfer cask stresses due to the design basis wind load are calculated by scaling the stresses calculated for tornado loads, from Section 3.7.9.2.3, by the ratio of the applied loads. The wind pressure is assumed to act either normal to the top or bottom ends of the cask or normal to the side of the cask. The maximum stresses in the transfer cask due to the design basis wind load are summarized in Table 3.6-1. The maximum stresses in the transfer cask due to design basis wind loads occur in the structural shell at the junction with the upper and lower trunnions. The maximum primary membrane and primary membrane plus bending stress intensities exist in the transfer cask structural shell and are 0.2 ksi and 0.7 ksi, respectively.

3.6.3 Cask Misalignment or Interference

3.6.3.1 Storage Cask

The effects on the storage cask of the loads arising from canister misalignment or interference during horizontal transfer from the transfer cask to the storage cask are evaluated for four interference scenarios: 1) misalignment resulting in the canister jamming against the storage cask annulus shielding ring, 2) excessive friction between the canister shell and storage cask rails, 3) canister interference with one of the rails due to misalignment, and 4) continual application of ram pressure after the canister contacts the storage cask bottom end canister support tubes. For all of these cases, the cask load is limited by the maximum force of 70,000 pounds that hydraulic ram is capable of exerting.

For the first three cases, the interference load is mostly resisted by the lower half of the storage cask liner and its attachment to concrete. The liner is attached to concrete via the shear lugs which are analyzed for the live load equal to the 200,000 pound weight of the transfer cask (load L_2 in Table 3.5-2 and Table 3.5-3). This live load results in 100,000 pounds per half of the liner which is higher than the 70,000 pounds force generated by the hydraulic ram. In addition, the above transfer cask load is included in the load combinations with a load factor of 1.7 (which is not applicable to the off-normal transfer conditions). Therefore, for the storage cask concrete and shear lugs, the first three handling cases above are bounded by the normal load combination that includes the vertical canister transfer. For the liner bottom segment anchorage to the concrete, the normal analysis summarized in Section 3.5.3.1.2 bounds the off-normal conditions because the factored normal load of 38.3 kips per anchor bounds the off-normal load of 70 / 2 = 35 kips per anchor.

Furthermore, interference may cause high stresses in the rail attachments to the cask liner. The analysis is performed assuming that the canister catches one of the rails, thus, the maximum ram load of 70,000 pounds is resisted by only one rail section. Top portion of the rail is attached to the bottom portion by six ¾" SAE Gr. 8 bolts for the load of 11.7 kips per bolt. The allowable bolt shear for this off-normal condition is calculated to be 12.6 kips and, therefore, the bolts are adequate. The rail bottom portion is welded to the liner using 3/8 inch fillet weld staggered on two sides of the rail. The weld stress of 5.2 ksi is significantly lower than the 29.4 ksi allowable for the weld.

In the fourth case, the ram load would be resisted by the canister support pipes and the storage cask bottom. As discussed in Sections 3.5.3.1.3 and 3.4.3.1, the pipes and the cask bottom are analyzed for the canister bounding dead weight of 82,000 pounds increased by 15% for the

handling load. Therefore, no additional analysis is required for the 70,000 pound maximum ram force.

3.6.3.2 Transfer Cask

The loads on the transfer cask arising from canister misalignment during horizontal transfer from the transfer cask to the storage cask result in reaction loads which are transferred to the transfer cask by the cask restraints through the lower trunnions and the hydraulic ram attachment to the transfer cask top lid.

The effects on the transfer cask of the loads arising from canister misalignment during horizontal transfer from the storage cask to the transfer cask are evaluated for three scenarios: 1) excessive friction between the canister shell and transfer cask rails, 2) canister interference with the storage cask, and 3) continual application of ram pressure after the canister contacts the transfer cask top lid. For all of these scenarios, the reaction loads are transmitted to the transfer cask by the cask restraints through the lower trunnions. Similar to the storage cask, the load is limited by the maximum hydraulic ram force of 70,000 pounds.

The stresses in the transfer cask components due to the off-normal load are evaluated using hand calculations. The lower trunnions are evaluated for the bounding off-normal load of 90,000 pounds applied by the cask restraints. The stresses are calculated by ratioing the stresses calculated for the transfer cask downending operation and by accounting for the cask restraint extensions, as discussed in Section 3.5.3.3.2. The ratioing is based on the downending design load of 200 kips (100 kips per trunnion) versus the bounding misalignment load of 90 kips (45 kips per trunnion). The resulting stresses are reported in Table 3.6-1.

For the case of excessive friction forces on the transfer cask rails, the force is transferred by shear from the rail sliding surface plate and the rail through the 3/32 inch fillet welds. The minimum length of 3/32 inch fillet weld required to satisfy the 0.3 F_u shear stress limit for normal horizontal transfer loading is 35 inches compared to the provided total weld length of 188.8 inches.

For the case of continual application of ram pressure in all three of the above cases, shear and bending loads occur in the lid, which are transferred to the cask through the lid bolts. The stresses in the transfer cask due to this off-normal event are provided in Table 3.6-1.

3.6.4 Hydraulic Ram Failure During Horizontal Transfer

There are no structural consequences as a result of this postulated event.

3.6.5 Off-Normal Load Combinations

Applicable off-normal load combinations for the storage and transfer casks are evaluated in accordance with Section 2.3.5 and presented in Table 3.6-2 through Table 3.6-4.

It can be seen that all components are adequate to withstand the off-normal design loads and have significant design margins.

Table 3.6-1 - Transfer Cask Stresses for Off-Normal Conditions

Cask Component	Stress Type	Stress Intensity (ksi)		
		Thermal (T)[1]	Design Basis Wind (W)	Misalignment (L_m)
Ram Access Cover	P_m	N/A	0.0	(2)
	$P_m + P_b$	N/A	0.26	
	$P_m + P_b + Q$	0.94	0.26	
Top Cover	P_m	N/A	0.00	0.00
	$P_m + P_b$	N/A	0.26	7.04
	$P_m + P_b + Q$	8.80	0.26	7.04
Bottom Cover	P_m	N/A	0.00	(2)
	$P_m + P_b$	N/A	0.02	
	$P_m + P_b + Q$	8.15	0.02	
Top Forging	P_m	N/A	0.01	1.92
	$P_m + P_b$	N/A	0.09	6.54
	$P_m + P_b + Q$	16.72	0.09	7.10
Bottom Forging	P_m	N/A	0.01	1.92
	$P_m + P_b$	N/A	0.09	6.54
	$P_m + P_b + Q$	16.18	0.09	7.10
Inner Liner	P_m	N/A	0.03	(3)
	$P_m + P_b$	N/A	0.24	
	$P_m + P_b + Q$	30.52	0.24	
Structural Shell (away from trunnions)	P_m	N/A	0.01	1.92
	$P_m + P_b$	N/A	0.09	6.54
	$P_m + P_b + Q$	30.56	0.09	7.10
Structural Shell (at upper trunnions)	P_m	N/A	0.22	(3)
	$P_m + P_b$	N/A	0.61	
	$P_m + P_b + Q$	20.31	0.61	
Structural Shell (at lower trunnions)	P_m	N/A	0.23	2.00
	$P_m + P_b$	N/A	0.66	7.86
	$P_m + P_b + Q$	20.41	0.66	10.83
Ram Access Cover Bolts	Shear	0.0	(3)	(2)
	Tension	26.3	(3)	(2)
Top Cover Bolts	Shear	0.0	(3)	0.0
	Tension	28.2	(3)	3.2
Bottom Cover Bolts	Shear	0.0	(3)	(2)
	Tension	29.1	(3)	(2)

Notes:

(1) Bounding stresses for all normal and off-normal thermal conditions are used. Thermal stresses are secondary.

(2) Ram access cover and bottom cover removed during transfer operations.

(3) Stresses are negligible.

Table 3.6-2 - Storage Cask Reinforced Concrete Evaluation Summary for Off-Normal Load Combination

Components	Load Combination $1.05\ D_v + 1.275\ (L_2 + T_v + W)$	Allowable[1]	Design Margin[2]
	Forces and stresses, kips/ft or ksi		
Concrete Hoop Reinforcement Stress	48.6	54	+0.11
Concrete Longitudinal Reinforcement Stress	23.2	54	+1.33
Concrete Bottom Radial Reinforcement Stress	12.5	54	+3.32
Concrete Hoop Shear Force (θR)	92.9	202.0	+1.17
Concrete Longitudinal Shear Force (zR)	32.6	192.3	+4.90
Shear Key Lateral Force	4.9	30.6	+5.24
Shear Lug Axial Force[3]	8.9	9.7	+0.09

Notes:

(1) The allowable stresses and forces are determined per Table 3.1-2.

(2) Design margin is equal to (Allowable/Stress) - 1.

(3) Shear lug axial forces are in kips/inch.

Table 3.6-3 - Storage Cask Steel Component Evaluation Summary for Off-Normal Load Combinations

Components	Load Combination[1] $1.05\ D_v + 1.275\ (L_2 + T_v + W)$	Allowable[2]	Design Margin[3]
	Stresses, ksi		
Liner Shell Membrane Plus Bending Stress	15.7	18.8	+0.20
Liner Shell Shear Stress	6.5	12.5	+0.92
Top Cover Membrane Plus Bending Stress	3.1	71.6	+22.1
Top Cover Shear Stress	0.3	38.2	+126
Liner Bottom Plate Membrane Stress	7.0	20.6	+1.94
Liner Bottom Plate Membrane Plus Bending Stress	15.4	25.8	+0.68
Liner Bottom Plate Shear Stress	1.3	13.8	+9.62
Liner Bottom Plate Weld Shear Stress	11.6	21	+0.81
Tie Rod Tension Force[4]	106.8	139.9	+0.31

Notes:

(1) Although not required, the steel component stresses are calculated using factored load combinations.

(2) The allowable stresses are determined per Table 3.1-4.

(3) Design margin is equal to (Allowable/Stress) - 1.

(4) Tie rod force is in kips.

Table 3.6-4 - Transfer Cask Off-Normal Load Combination Results

Cask Component	Stress Type	Load Combination Maximum Stress Intensities (ksi)		Allowable S.I.[2] (ksi)	Design Margin[3]
		3 (D+L+W+T)	4[1] (D+L+L_m+T)		
Ram Access Cover	P_m	0.26	(4)	26.6	Large
	$P_m + P_b$	0.52		39.9	75.7
	$P_m + P_b + Q$	1.57		60.0	37.2
Top Cover	P_m	0.04	0.04	26.6	Large
	$P_m + P_b$	0.52	7.30	39.9	4.47
	$P_m + P_b + Q$	9.43	16.21	60.0	2.70
Bottom Cover	P_m	0.41	(4)	26.6	63.9
	$P_m + P_b$	0.76		39.9	51.5
	$P_m + P_b + Q$	8.91		60.0	5.73
Top Forging	P_m	1.81	3.72	26.6	6.15
	$P_m + P_b$	7.22	13.67	39.9	1.92
	$P_m + P_b + Q$	25.77	32.78	60.0	0.83
Bottom Forging	P_m	1.81	3.72	26.6	6.15
	$P_m + P_b$	7.22	13.67	39.9	1.92
	$P_m + P_b + Q$	25.23	32.24	60.0	0.86
Inner Liner	P_m	4.22	4.19	24.9	4.90
	$P_m + P_b$	4.80	4.56	37.4	6.79
	$P_m + P_b + Q$	35.37	35.13	56.1	0.59
Structural Shell[5]	P_m	2.67	3.72	26.6	6.15
	$P_m + P_b$	7.73	13.67	39.9	1.92
	$P_m + P_b + Q$	39.61	46.62	60.0	0.29
Ram Access Cover Bolts	Shear	(6)	(4)	29.7	(4)
	Tension			71.9	
	Combined[7]			1.0	
Top Cover Bolts	Shear	(6)	0.2	29.7	Large
	Tension		36.5	71.9	0.97
	Combined[7]		0.26	1.0	2.85
Bottom Cover Bolts	Shear	(6)	(4)	29.7	(4)
	Tension			71.9	
	Combined[7]			1.0	

Notes:

(1) The combination of deadweight and off-normal handling loads bounds off-normal load combinations 3 and 4 in Table 2.3-8 of this FSAR.

(2) Allowable stress intensities are based on the material properties at 400°F for the inner liner and at 300°F for all other transfer cask components.

(3) Design margin is equal to (Allowable/Stress) - 1.

(4) The ram access cover and bottom cover are removed for transfer handling operations.

(5) Bounding stresses in structural shell at location of upper and lower trunnions and away from trunnions.

(6) Bounded by load combination 1 since the cover bolt stresses due to wind loading are insignificant.

(7) For combined shear and tension, $(f_t^2/F_{tb}^2) + (f_v^2/F_{vb}^2) \leq 1.0$.

This page intentionally left blank.

3.7 Evaluation of Accident Conditions

The FuelSolutions™ storage system is evaluated for a range of postulated accident events as defined in Sections 2.3.3 and 2.3.4. The design basis postulated accident conditions and events are in accordance with NUREG-1536 and ANSI/ANS-57.9, and include events which are postulated because their consequences may result in maximum potential impact on the immediate environs.

3.7.1 Fully Blocked Storage Cask Inlet and Outlet Vents

The blockage of the vents results in increased temperatures inside the storage cask due to the loss of air flow. This results in higher inside surface temperatures and larger thermal gradients in the storage cask wall section. As discussed in Section 4.6.1.2, the peak concrete temperature in a storage cask with a maximum heat load of 28 kW reaches the short-term allowable concrete temperature at 41 hours after termination of the air flow through the inlet and outlet vent screens. Storage casks with lower heat loads take longer to reach the short-term allowable concrete temperature under blocked vent conditions. *Technical specifications* in Chapter 12 of this FSAR require periodic monitoring of the cask, either by visual inspection of the cask vent screens or monitoring of the liner thermocouple temperature. The required periodic surveillance intervals, which are based upon the total heat load of the cask, provide sufficient time to allow corrective actions to be taken to maintain safe storage conditions.

The bounding temperature distribution for a storage cask with a maximum heat load of 28 kW at 41 hours after blockage of the storage cask inlet and outlet vent screens is conservatively used for the thermal accident analysis of the storage cask. The internal concrete forces and moments are calculated using the methodology described in Section 3.5.3.1.1. The thermal accident loading need not be combined with any of the other accident events (flood, tornado, earthquake, etc.). The thermal accident load combination results are shown in Table 3.7-5 and Table 3.7-6.

3.7.2 Loss of Transfer Cask Neutron Shielding

The loss of neutron shield accident does not have any significant effect on the transfer cask stresses. The cask temperature gradient, e.g., the temperature differential between the inner liner and structural shell, is determined by the heat flux through the wall. This heat flux is controlled by the decay heat load which does not change when the neutron shield is lost. Moreover, as the overall transfer cask temperatures increase due to loss of the conduction medium, the radiative heat transfer also increases, thereby slightly decreasing the temperature gradient through the cask wall. These conclusions are supported by the temperature analysis results in Chapter 4.

General thermal stresses in the transfer cask body are classified as secondary stresses in accordance with the ASME Code. Evaluation of secondary stresses for Service Level D conditions is not required per F-1310(c) of the ASME Code. However, thermal stresses in the transfer cask cover bolts are considered primary stresses. As such, the cover bolt stresses are evaluated for accident thermal conditions.

Thermal stresses in the cover bolts result from differential thermal expansion between the cover bolts and the cover plates at elevated temperature. The highest cover bolt thermal stresses result from the thermal condition that results in the highest temperature at the location of cover bolts.

As shown in Table 4.6-3 of this FSAR, the transfer cask temperatures in the regions of the cover bolts due to the loss of neutron shield accident thermal condition are bounded by those due to the accident fire thermal condition. A bounding thermal stress evaluation of the transfer cask cover bolts is performed for the accident fire thermal condition in Section 3.7.6.

The shielding and thermal consequences are discussed in the respective chapters.

3.7.3 Storage Cask End Drop

The postulated accident drop of the storage cask is a vertical drop from the height of 36 inches (as discussed in Section 2.3.3.2). This drop is postulated to occur when the storage cask is lifted to be placed onto or removed from the upender/downender J-skid.

The drop evaluation is performed in two steps: 1) The rigid body dynamic responses of the storage cask and the canister are calculated for the accident end drop condition using finite element dynamic analyses, and 2) the obtained rigid body *g*-loads are used to evaluate the cask via the finite element model and approach described in Section 3.5.3.1.1.

3.7.3.1 Determination of End Drop Loads

3.7.3.1.1 Analytical Approach

The methodology used for the storage cask end drop loads evaluation is based on the approach presented in NUREG/CR-6608,[21] which summarizes the results of a series of drop tests performed by Lawrence Livermore National Laboratory (LLNL) and provides guidelines for the cask analyses. Following the NUREG, the cask drop analyses are performed using the non-linear transient dynamic finite element code LS-DYNA,[22] which is similar to DYNA3D used by LLNL but has enhanced processing capabilities.

The ¼-symmetry finite element model shown in Figure 3.7-1 and Figure 3.7-2 includes the storage cask with canister, concrete pad, and underlying soil. This model includes a total of 58,386 nodes and 51,656 elements (48,336 brick elements and 3,320 shell elements).

The storage cask body is modeled as solid concrete conservatively assuming perfectly elastic properties. This material allows no spalling at the cask bottom, which would absorb energy and reduce the cask drop loads. The canister shell assembly is modeled with elastic shell elements, while the top and bottom end shield plugs and closure plates are modeled using brick elements. The canister basket assembly and fuel are represented as a solid cylinder having physical properties (mass and stiffness) representative of a typical FuelSolutions™ basket. The concrete pad model uses solid brick elements and is based on LS-DYNA material type 16 with the effective plastic strain curve and pressure-volume behavior defined in accordance with Appendix C of NUREG/CR-6608. Finally, the underlying soil is modeled using solid brick elements as a perfectly elastic material. Non-reflecting boundary conditions are applied to the exterior

[21] NUREG/CR-6608, Witte, et. al., *Summary and Evaluation of Low-Velocity Impact Tests of Solid Steel Billet Onto Concrete Pads,* UCRL-ID-129211, Lawrence Livermore National Laboratory, February 1998.

[22] Livermore Software Technology Corporation, *LS-DYNA User's Manual (Nonlinear Dynamic Analysis of Structures in Three Dimensions),* Version 940, Livermore, CA, June 1997.

embedded faces of the soil elements to eliminate reflection of stress waves within the soil. Material properties used in the cask end drop analysis are presented in Table 3.7-1.

The non-linear interfaces between the interfacing model components are modeled using contact surfaces which transfer compressive forces but allow uplift.

In accordance with NUREG/CR-6608, the analytical model used to predict the cask loads is validated using the LLNL billet test measurements. Section 3.8 presents the results of the successful benchmarking effort.

As discussed in Section 3.1.1.1, the canister is supported by sixteen stainless steel pipes, which are designed to crush and limit the canister G-load during the postulated end drop event. Pipe sections are selected for this application since lateral pipe crushing is a well understood and predictable response. Crush pipes and toroidal impact limiters have been used to provide package cushioning for many applications, including shipping casks.[23] The upper and lower bounds of the canister support pipe (discussed in the following section and shown in Figure 3.7-3) are in good agreement with the analytical and experimental research data.[24]

3.7.3.1.2 Analyzed Cases

There are five cases evaluated for the end drop of a storage cask. All cases are free drops from a height of 36 inches and impact flat on the cask's bottom end. Three main cases are used to evaluate the maximum *g*-loads on the cask and canister. The fourth case is a sensitivity analysis to establish that the first three cases are analyzed with storage pad and soil dimensions that are sufficiently large to eliminate the edge effects and to assure conservatism of the loads. Finally, the fifth analysis determines the maximum deflection of the canister support pipes (internal impact limiters) to assure that the pipes do not "bottom out" in the end drop event.

The three ISFSI storage pad thickness and soil stiffness combinations are evaluated to establish acceptable pad thickness as a function of existing soil conditions at potential ISFSI sites. These three pad and soil combinations, and the pad material properties, are presented in Table 3.7-2. Any of these combinations is adequate to support all storage casks and equipment loads. In order to avoid an end drop load which exceeds that analyzed herein, a stiffer combination of pad and soil shall not be used unless a site-specific analysis is performed to demonstrate that the load is bounded. In addition, the upper bound stress-strain curve is used for the canister support pipes to account for the range in the material properties and the potential for a dynamic increase in yield strength. A yield strength of 48 ksi and an ultimate tensile strength of 90 ksi is assumed for the upper bound curve to produce the maximum canister *g*-loads.

The above three cases are analyzed with the pad radius of 360 inches and the soil radius of 1,200 inches. Since the storage pad size is site-specific, a pad size sensitivity analysis is performed to assure that the pad modeled in the three base cases described above is large enough to eliminate the edge effects. This study is performed only for the most critical case of the 3'-0" storage pad supported by the 10 ksi soil. The pad and soil radii for this configuration are

[23] Shappert, L. B., *A Guide for the Design, Fabrication, and Operation of Shipping Casks for Nuclear Applications*, Oak Ridge National Laboratory, ORNL-NSIC-68, February 1970.

[24] Estep, A., *Energy Absorbing Parameters in Steel Rings,* University of Tennessee, 1969.

increased by 50%, i.e., the pad radius of 540 inches and the soil radius of 1,800 inches are used. The analysis results are obtained in the same fashion as described above.

For the fifth case, the finite element model is used to evaluate the potential for a canister to "bottom out" due to the complete collapse of the support pipes. In this model, the heaviest canister assembly and the lower bound canister support pipe stiffness are assumed. The lower bound stress-strain curve assumes nominal yield and ultimate strengths of 30 ksi and 75 ksi, respectively, and conservatively does not consider a dynamic increase in strength properties.

3.7.3.1.3 Filtering of Results

The acceleration time-history results are filtered to remove the effects of any vibratory responses within the cask, thus providing the rigid-body acceleration time-history. For consistency with NUREG/CR-6608, the cutoff frequencies used for filtering the time-history results are set at a minimum of 80% of the lowest natural vibration frequencies of the storage cask body, canister shell assembly, and canister basket assembly.

The storage cask longitudinal axial frequency is determined using classical hand calculations, treating the storage cask body as a uniform bar vibrating along its longitudinal axis. For the purpose of the drop loads evaluation, the upper bound longitudinal vibration frequency is conservatively used as the basis for the filtering cutoff frequency.

The storage cask longitudinal vibration natural frequency is calculated using Roark,[25] Table 36, Case 7c, assuming the storage cask has a uniform load w per unit length (i.e., the weight of the cask wall) plus a concentrated load W at the top end (i.e., the weight of the top flange and top cover). The resulting cask frequency is determined to be 162 Hz. A cutoff frequency of 130 Hz (80% of the lowest natural frequency) is used for the storage cask.

The longitudinal axial frequency for the canister shell assembly is determined in a similar fashion, assuming the canister shell has a uniform load w per unit length (i.e., the weight of the cylindrical shell) plus a concentrated load W at the top end (i.e., the weight of the top shield plug and closure plates). The resulting canister frequency is determined to be 135 Hz and a cutoff frequency of 108 Hz (80% of the lowest natural frequency) is conservatively used for the canister shell.

The canister basket/fuel cylinder is modeled using material properties adjusted to provide a 108 Hz longitudinal vibration frequency, which is determined to be representative of a typical FuelSolutions™ basket. Therefore, a filtering cutoff frequency of 86 Hz is used for the canister basket/fuel cylinder.

3.7.3.1.4 Summary of Results

The unfiltered and filtered acceleration time-histories for the storage cask body, canister shell assembly, and canister basket assembly during the 36-inch end drop are presented in Figure 3.7-4, Figure 3.7-5, and Figure 3.7-6, respectively. The peak rigid-body accelerations in the storage cask, canister shell, and canister basket for each drop case are summarized in Table 3.7-3.

[25] Young, W.C., *Roark's Formulas for Stress and Strain*, Sixth Edition, McGraw-Hill Book Company, 1989.

The maximum peak rigid-body accelerations in the storage cask, canister shell, and canister basket are 57*g*, 28*g*, and 26*g*, respectively. In general, the maximum peak rigid-body accelerations occur for the case with the 3'-thick pad on the 10 ksi soil. The general shape of the storage cask rigid-body acceleration time-history response for this controlling end drop condition is that of an isosceles triangle with a pulse duration of 5 msec. For the other two cases, the first spike is not as dominant and the cask body response is better described as a ½-sine wave with a duration of ~20 msec. The peak accelerations for these conditions do not control because they are substantially lower than that for the 3'-thick pad. The canister shell and canister basket accelerations are controlled by crushing of the support pipes and do not vary significantly with variations in pad thickness and soil stiffness. The general shape of the canister shell and basket rigid-body acceleration time-history responses for the controlling end drop condition are that of a half sine-wave pulse with a pulse duration of 35 msec for both the canister and the basket.

As discussed in Section 3.7.3.1.2, a sensitivity analysis is performed to assure that the storage cask, canister, and basket loads are not sensitive to the pad dimensions. The rigid body acceleration values for all three components are summarized in Table 3.7-3, which shows that the difference in drop loads between this larger pad and the base model pad conditions are insignificant. Therefore, it is demonstrated that the pad size used in the analyses is sufficient to eliminate the edge effects.

As discussed in Section 3.7.3.1.2, a bottom end drop evaluation is also performed using the heaviest canister assembly and the lower bound strength properties of the canister support pipes to assure that the canister does not “bottom out”. The results of this analysis show that the support pipes do not bottom out. The maximum displacement of the support pipes for this conditions is 2.64 inches versus an available stroke of 3.36 inches.

3.7.3.2 Structural Evaluation of the Storage Cask

The cask evaluation is performed using the finite element model and the static analysis described in Section 3.5.3.1.1. The equivalent static acceleration loads are established for the cask, canister, and cask cover plate.

For the cask body with the lowest axial vibration frequency of 162 Hz, the elastic DLF is obtained from NUREG-3966.[26] For a triangular pulse with t_d/T ratio of 0.81, the DLF is determined to be 1.5. The equivalent static loading for the cask body is $57g \times 1.5 = 85.5g$. An acceleration of 89*g* is conservatively applied to the entire model in the ANSYS analysis.

For the cover plate, the frequency is determined using classical plate formulas (simply supported plate with distributed load) as 21.8 Hz. The plate is soft compared to the impact duration and, therefore, the corresponding DLF is lower than 1. For conservatism, the DLF is taken as no lower than unity and the equivalent static loading of 59*g* is used for the cask cover. Since the cover plate mass is a part of the model and since the equivalent load of 89*g* is applied to the entire model (as discussed above), the equivalent density of the cover plate is adjusted for the end drop condition by the factor of 59 / 89 = 0.66.

[26] NUREG/CR-3966, *Methods for Impact Analysis of Shipping Containers*, Lawrence Livermore National Laboratory, UCID-20639, 1987.

The end drop deceleration for the canister can be characterized as a half-sine pulse with the peak values of 28*g* for the shell and 26*g* for the internal basket. Since the basket is considerably heavier than the shell for all canisters and, therefore, contributes more to the drop load, it is conservative to use the average acceleration of 27*g*. Conservatively using the maximum half-sine pulse DLF of 1.75 (NUREG-3966), the canister equivalent static load is $27g \times 1.7 = 46g$. This canister acceleration is used in the analysis of the storage cask.

To assure that the evaluation is bounding, the load combinations with and without normal thermal loading are considered. The results of the stress analysis are included in the load combination evaluation presented in Table 3.7-5 and Table 3.7-6.

3.7.4 Storage Cask Tip-Over

As demonstrated in Section 2.6.3, the FuelSolutions™ storage cask tip-over onto the ISFSI pad during storage conditions is not a credible event. Consequently, the only tip-over accident postulated to occur is that during up- or down-ending of the cask while secured to the J-skid (see Section 2.3.3.3).

The storage cask arrangement within the upender/downender is shown in Figure 1.2-21. As seen from that figure, up- and down-ending operations occur over the impact limiter recessed into the ISFSI pad in the storage cask handling area. A description of the impact limiter is provided in Section 1.2.1.4.2 and on the drawings in Section 1.5.1.3.

Similar to the end drop analysis, the cask tip-over evaluation is performed in two steps: 1) the rigid body dynamic response is obtained to determine the peak *g*-loading, and 2) the obtained rigid body *g*-loads are used to evaluate the cask via the finite element model and approach described in Section 3.5.3.1.1.

3.7.4.1 Determination of Tip-Over Load

3.7.4.1.1 Analytical Approach

The storage cask tip-over loads are developed using a spreadsheet analysis. The kinetic energy of the falling cask is balanced with the strain energy of the impact limiter crush. As shown in Figure 1.2-21, the contact between the J-skid and the impact limiter surface occurs through the flanges of the skid I-beams.

The tip-over geometry is illustrated in Figure 3.7-7. Using the principles of energy conservation, the storage cask kinetic energy is equal to the change in potential energy between the beginning of the fall (C.G. over corner) and the end of the fall (horizontal orientation). Therefore, the drop energy that needs to be absorbed is calculated as the potential energy based on the differences in the cask C.G. location. The energy is calculated using the formula:

$$E = \left(W_{cask} + W_{skid}\right) \times \left(h_{CG\ overcorner} - h_{CGafterimpact}\right)$$

where:

W_{cask}, W_{skid} = weight of the storage cask and J-skid, respectively

$h_{CG\ over\ corner}$, $h_{CG\ after\ impact}$ = C.G. height of the cask and skid before and after the tip-over

As shown in Figure 3.7-7, $h_{CG\ after\ impact}$ in the above formula is determined as the C.G. height in horizontal orientation minus Δ_{CG} (impact limiter crush under the center of gravity). Hence, the additional kinetic energy gained during the impact is also included for conservatism.

The calculated drop energy is absorbed by crushing the polyurethane foam impact limiter. Since the storage cask and J-skid rotate about the bottom corner, the impact limiter crushing is not uniform along the cask length. For the purpose of this analysis, the impacted strip of the impact limiter is discretized into 10 equally long segments (1/10 of the strip length). Each segment is approximated to be crushed uniformly. The force-deflection curve for the impact limiter segment is obtained based on its width, length, height, and the polyurethane foam stress-strain relationships taken at the hot and cold ends of the ambient temperature range. The stress-strain curves are provided by the foam manufacturer and further adjusted for the effects of high strain rate and manufacturing variability. The characteristics of the polyurethane foam material used for storage cask impact limiters are provided in Section 1.5.2.1 of this FSAR.

Once the impact limiter segment dynamic properties are known, the impact process is analyzed by incremental progression of the storage cask rotation. The crush depth, impact limiter force, absorbed energy, and acceleration at the top of the cask are determined at the end of every step. The impact is considered to be over when all available drop energy is absorbed. At this point, the maximum impact limiter strain is checked to assure that it is below the lock-up strain for the foam and the most limiting force time-history is extracted to obtain the pulse peak, shape, and duration. The latter information is used in determination of the equivalent static load for the cask.

3.7.4.1.2 Analyzed Cases

Two storage cask tip-over cases are evaluated to assure that all possible conditions are bounded:

1. "hard" impact that produces maximum cask *g*-loading (to be used in the cask structural analysis)
2. "soft" impact that results in impact limiter maximum crush depth (to assure that the foam is not subjected to excessive strains).

These two bounding conditions are produced by the following assumptions:

<u>*Hard Impact*</u>

- Lower bound weight and moment of inertia for the storage cask (only a long cask is considered because it has more energy than a short cask). Based on the data in Table 3.2-1, the cask weight of 315,000 pounds and the corresponding moment of inertia of $6.0 \cdot 10^6$ in-lbs-sec^2 are used.
- Lower bound weight of the J-skid (10,000 pounds).
- Cold (0°F) properties of the polyurethane foam (see Table 3.7-4).
- Each leg of the J-skid is assumed to land on the seam between two polyurethane foam strips of the storage cask impact limiter and crush both of these strips (resulting in higher resistance force).

<u>*Soft Impact*</u>

- Upper bound weight and moment of inertia for the cask (only a tall cask is considered because it has more energy than a short cask). Based on the data in Table 3.2-1, the cask weight of 335,000 pounds and the corresponding moment of inertia of $6.4 \cdot 10^6$ in-lbs-sec^2 are used.
- Upper bound weight of the J-skid (17,000 pounds).
- Hot (100°F) properties of the polyurethane foam (see Table 3.7-4).
- Each leg of the J-skid is assumed to land centered on a single polyurethane foam strip of the storage cask impact limiter and crush only that one strip (resulting in lower resistance force and greater crush depth).

The storage cask impact limiter data used in the analysis (after the strain rate effects and manufacturing variability adjustments of the foam properties) are shown in Table 3.7-4.

3.7.4.1.3 Evaluation of Results

The storage cask impact limiter maximum strain during the "soft" impact is determined to be 64.6%. This strain is acceptable as it is below the lock-up zone for the polyurethane foam material. The maximum dynamic acceleration at the cask top end for this condition is determined to be 11.6*g* and does not control the design.

The acceleration time-history at the storage cask top end for the "hard" impact described in the previous section is shown in Figure 3.7-8. The maximum dynamic acceleration is determined to be 21.9*g*. The rigid body deceleration of the storage cask top end is approximated as a constant force of that magnitude with a finite rise time of 0.015 seconds.

The lowest natural frequency of the storage cask supported in horizontal orientation is determined by using the ANSYS model described in Section 3.5.3.1.1. For the purposes of this analysis, the non-linear gap elements at the cask segment interfaces are replaced with node coupling at the corresponding locations. The lowest frequency with a significant mass participation is determined to be 79 Hz and the corresponding period is T = 1/f = 0.0127 seconds.

Using the impact load function described above and the storage cask natural period, the maximum elastic DLF for the cask tip-over event is determined from NUREG-3966 to be 1.22. The equivalent static load for the structural analysis is:

$$G_{static} = DLF \times G_{max} = 1.22 \times 21.9g = 26.7g$$

For conservatism, a static acceleration of 28*g* is used in the cask structural evaluation and applied along the entire length of the cask.

3.7.4.2 Structural Evaluation of the Storage Cask

The storage cask evaluation is performed using the finite element model and the static analysis described in Section 3.5.3.1.1. The acceleration of 28*g* is applied to the entire model and the canister weight loading factored by the same acceleration is applied at the support rail locations. The cask is supported horizontally by the J-skid saddles. To assure that the evaluation is bounding, the load combinations with and without normal thermal loading are considered. In addition, since the tip-over accident could occur during either upending or downending of the

storage cask, the acceleration loads are combined with either vertical (T_v) or horizontal (T_h) thermal load.

The results of the storage cask stress analysis are presented in Table 3.7-5 and Table 3.7-6.

A centrifugal force acting on the canister during the postulated tip-over event tends to cause it to slide out of the cask cavity upon impact. Neglecting the friction force, the canister would have to be restrained by the top cover plate and its bolts. The centrifugal force of the canister at the maximum angular velocity is calculated to be 56.5 kips and the centrifugal force of the cover's own mass is 6.5 kips. Modeling the top cover plate as having a fixed edge at the bolt circle, the maximum bending stress is determined to be 4.2 ksi, which is well below the accident allowable of 121.7 ksi. The bolt tension, including the prying force due to edge moment, is 13.7 kips. In addition, the bolt shear due to the top cover load at 28*g* is calculated to be 14 kips per bolt. Using the AISC interaction equation for the bolts, the tensile allowable in presence of this shear load is reduced from 82.8 kips to 77.4 kips. Since the shear force is well below the bolt's allowable of 35.1 kips and the tension is well below the allowable of 77.4 kips, the storage cask top cover plate and its bolts are adequate to prevent the canister from sliding out of the cask.

3.7.5 Transfer Cask Side Drop

As discussed in Section 2.3.3.2.2, the transfer cask 72-inch side drop is postulated to occur at the canister horizontal transfer pad outside of the plant's fuel building. This pad is assumed to have the size of 30 feet by 50 feet, the thickness of 2'-0", and to be reinforced with #8 rebar at 18 inches (similar to the 2'-thick ISFSI storage pad described in Section 3.7.3). The elastic modulus for the underlying soil is limited to 15,000 psi. Since all of the above parameters are the maximum design values, they result in the greatest permissible stiffness of the canister transfer pad, thereby producing the highest possible drop loads. The site-specific pad design should be evaluated by the licensee to confirm that the design basis deceleration loads for the transfer cask and canister are not exceeded.

The approach to the transfer cask side drop analysis is similar to that for the storage cask end drop described in Section 3.7.3 and consists of two steps: *g*-load determination and cask stress analysis.

3.7.5.1 Determination of Side Drop Loads

Determination of the drop *g*-loads for the FuelSolutions™ W100 transfer cask side drop is performed using LS-DYNA finite element model that includes the transfer cask, loaded canister assembly, reinforced concrete pad, and underlying soil. The ½-symmetry model is shown in Figure 3.7-9 and includes a total of 80,998 nodes and 68,880 elements.

The transfer cask assembly model is shown in Figure 3.7-10. The transfer cask model includes the main structural components (i.e., inner shell, outer shell, top and bottom end flanges, top and bottom end cover plates), as well as the lead gamma shield. Linear elastic properties are used for all materials, except for the lead, which is modeled with the stress-strain characteristics presented in Table 3.3-8. The transfer cask components not discretely modeled include the liquid neutron shield and jacket, the ram access cover assembly, and the top and bottom cover solid neutron shields and jackets, however, their mass is included in the model. These components of the cask are not designed to withstand the postulated side drop event and their failure would tend

to reduce the overall drop loads. Therefore, absence of these components in the model provides a conservative estimate of the cask drop loads.

The loaded canister assembly is modeled as a solid right circular cylinder with a mass density and modulus of elasticity adjusted to provide the total weight and a transverse natural vibration frequency representative of a typical FuelSolutions™ canister assembly.

The soil, storage pad, and interfaces between the system components are modeled as described in Section 3.7.3. Material properties used in the transfer cask side drop analysis are presented in Table 3.7-7. The non-linear interfaces between the interfacing model components are modeled using contact surfaces which transfer compressive forces but allow uplift. A friction coefficient of 0.25 is used to model sliding interface between the surfaces.

Similar to the storage cask end drop, the analytical model used to predict the cask loads is validated using the NUREG/CR-6608 billet test measurements. Section 3.8 presents the results of the successful benchmarking effort.

The transfer cask lowest natural frequency is determined by performing a modal analysis using the transfer cask finite element model. The results show that the lowest frequency is 82 Hz and corresponds to the ovaling bending of the cask shell. Although a cutoff frequency of 80% of the lowest frequency is used in NUREG/CR-6608 to obtain the rigid body response, a conservative higher value of 89 Hz is used for the transfer cask analysis. The maximum transfer cask peak rigid-body acceleration resulting from the 72-inch side drop is 46*g*. The filtered and unfiltered acceleration time-history plots for this condition are presented in Figure 3.7-11. The general shape of the transfer cask rigid body acceleration time-history response for the controlling side drop condition is that of a half sine-wave pulse with a pulse duration of 22.5 msec.

To determine the equivalent static acceleration to be applied in the cask stress analysis, a dynamic load factor (DLF) is applied to the maximum acceleration of 46*g*. Based on the cask lowest natural frequency of 82 Hz and the drop duration of 22.5 msec, the DLF for a half-sine wave impulse loading is obtained from NUREG/CR-3966 as 1.3. Therefore, the amplified acceleration is equal to 1.3 x 46*g* = 60*g*. This side drop acceleration of 60*g* is used in the stress analysis.

3.7.5.2 Structural Evaluation of the Transfer Cask

A half-symmetry elastic finite element model is used for the transfer cask side drop stress analysis. The ANSYS model is shown in Figure 3.7-12 and includes the outer and inner shells, lead shielding between the inner and outer shells, top and bottom flanges, and top and bottom cover plates. All of these components are modeled with 8-noded brick elements (ANSYS SOLID45) and at least two elements are used through the thickness. Weight effects of the components not explicitly modeled (ram cover, trunnions, liquid neutron shield, neutron shield shell) are accounted for by adjusting the weight density of the components to which they are attached.

As discussed in Section 3.3.2, the analysis assumes linear elastic properties for all steel components. The lead shielding behaves as an elastic-plastic material and its stress-strain curve is presented in Figure 3.3-2. To allow separation of lead from the shells, point-to-point contact elements (ANSYS CONTAC52) are used between the lead and the upper half of the outer shell,

as well as between the lead and the inner shell at all locations. To account for nonlinear behavior in the lead, a large deformation static analysis is used.

Symmetric boundary conditions are applied at the symmetric boundary. Radial constraints are provided at the nodes within the region of contact during the side drop. A half-symmetry contact angle of approximately 11° is used based on a simplified analysis of the cask penetrating a concrete surface when dropped from a height of 72 inches.

The loads on the transfer cask due to the loaded canister are modeled as pressure loads with a cosine distribution over a half-angle of 45° and a uniform distribution over the length of the cavity. The total canister load is based a bounding canister weight of 82 kips. An acceleration load of 60g is applied to the model to account for the inertial load of the transfer cask.

The maximum primary stress intensities are presented in Table 3.7-8. These stresses are included in the respective load combinations.

As discussed in Section 3.3.2, the stability of the transfer cask body under the side drop load is determined based on the plastic instability load (i.e., load at which unbounded plastic deformation occurs without increase in load). The finite element model used for this analysis is very similar to the one shown in Figure 3.7-12, except the elasto-plastic properties presented in Table 3.3-7 are used for the transfer cask steel. In accordance with the requirements of Appendix F, F-1341.4(a) of the ASME Code,[27] the maximum applied load is limited to 70% of the plastic instability load. Therefore the minimum load which the transfer cask must be able to withstand before reaching the plastic instability load is $60g / 0.7 = 85.7g$. The plastic analysis of the transfer cask is performed by incrementally applying the side drop load up to 90*g*. The results demonstrate that the cask remains stable. Therefore the 60*g* design load is less than 70% of the plastic instability load and satisfies the stability requirements.

Failure of the neutron shield shell is postulated to occur as a result of the transfer cask side drop. Loss of the neutron shield does not affect the structural integrity of the transfer cask. Consequences for the temperatures and shielding, respectively, are discussed in Chapters 4 and 5.

3.7.6 Fire

For the storage cask postulated accident fire event, the concrete exterior surface exceeds the ACI short-term local allowable temperature for a depth of less than three inches, as discussed in Section 4.6.1. Therefore it is postulated that there may be some spalling of concrete due to excessive local heating. While some of the exterior concrete may spall off, Figure 4.6-6 shows that the bulk of concrete remains intact. This unaffected concrete would permit the cask to perform its shielding function and allow normal unloading of the cask for detailed inspection.

The transfer cask temperatures during the fire accident are reported in Section 4.6.2.2.2. The only structural consequences of the fire that need to be evaluated are thermal stresses in the cover bolts and the effect of the fire on the cask material properties. The thermal stresses in the cask body are secondary (i.e., self-limiting) and do not require evaluation under postulated

[27] American Society of Mechanical Engineers (ASME) Boiler and Pressure Vessel (B&PV) Code, Section III, Division 1, *Appendices*, 1995 Edition.

accident conditions. However, thermal stresses in the transfer cask cover bolts are considered primary stresses. As such, the cover bolt stresses are evaluated for accident thermal conditions.

Thermal stresses in the cover bolts result from differential thermal expansion between the cover bolts and the cover plates at elevated temperature. As shown in Table 4.6-5 of this FSAR, the maximum temperature of transfer cask at the top and bottom flange locations for the fire condition is 568°F. The thermal stress in the top and bottom cover bolts is conservatively calculated using a bounding temperature of 600°F for the fire condition as follows:

$$f_t = E_b(\alpha_c - \alpha_b)(T - 70) = 30.0 \text{ ksi}$$

where:

α_c = 9.53×10^{-6} in/in/°F, Mean coefficient of thermal expansion of the cover plate material (SA-240, Type 304 stainless steel) at 600°F

α_b = 7.32×10^{-6} in/in/°F, Mean coefficient of thermal expansion of the cover bolt material (SA-320, Grade L43 bolting steel) at 600°F

E_b = 25.2×10^{6} psi, Elastic modulus of the cover bolt material (SA-320, Grade L43 bolting steel) at 600°F

T = 600°F, Bounding temperature at bolt location for fire.

As shown in Figure 4.6-11, all transfer cask components, except for the neutron shield jacket, remain well within allowable temperatures for their materials of construction. The accident fire has no effect on the cask structural performance and its thermal and shielding consequences are discussed in Chapters 4 and 5 of this FSAR.

In addition to the transfer cask body, the effects of a postulated fire on the lifting trunnions are also considered. The trunnion outer surfaces are directly exposed to the fire and their temperatures are expected to be close to that of the neutron shield jacket, i.e., 1400°F. As shown in ASME Code Case N-47-33,[28] the stainless steel allowable stresses do not decrease significantly after exposure to this kind of temperature for a short period of time (less than 10 hours), hence, no significant material degradation would occur. As shown in Section 3.4.3.2, the trunnion stresses during lifting are low (do not exceed 4 ksi). Therefore, the transfer cask would continue to perform its primary functions to allow unloading and inspection following the fire.

3.7.7 Explosive Overpressure

The pressure effects of the design basis tornado wind load typically envelope any credible explosive overpressure loads on the FuelSolutions™ storage and transfer casks since no potentially explosive materials are stored in close proximity to the ISFSI. However, the licensee should compare site-specific hazards to the design basis tornado wind loading to assure that the resulting explosive overpressures are bounded. Evaluation of the storage cask and transfer cask for the tornado loading is provided in Section 3.7.9.

[28] Case N-47-33, *Class 1 Components in Elevated Temperature Service,* American Society of Mechanical Engineers (ASME) Boiler and Pressure Vessel (B&PV) Code, Section III, Division 1, Code Cases, 1995 Edition.

3.7.8 Flood

In accordance with the requirements of ANSI/ANS-57.9, Section 6.17.4.1, a minimum safety factor of 1.1 must be provided for stability against overturning and sliding during any design event. Buoyancy effects are included in the storage cask flood evaluation. The net lateral water pressure resulting from the design basis flood is estimated using Hoerner[29] as follows:

$$F_d = \frac{1}{2} C_d \rho v^2 A = 47.1 \text{ kips}$$

where:

C_d = 0.5, Drag coefficient for Reynolds number over $5 \cdot 10^5$

ρ = 1.94 slug/ft^3, Mass density of water based on 62.4 pcf

v = 21 ft/sec, Flood flow velocity

A = 220.5 ft^2, Projected area of storage cask

Overturning stability of the storage cask is evaluated assuming that the cask is pinned at its outer bottom edge on the side opposite the direction of flow, as shown in Figure 3.7-13. A net buoyant weight of 182.5 kips for the loaded storage cask (equal to a conservative 300.0 kip weight of the dry loaded storage cask less 117.5 kips of water displaced by the storage cask and canister) is used for the overturning stability analysis. The maximum overturning moment resulting from the lateral drag force (F) acting at the mid-height of the storage cask ($h/2$=9.59 ft) is:

$$M_{ot} = \frac{F_d h}{2} = 451.5 \text{ kip} - \text{ft.}$$

The restoring moment based upon the buoyant weight of the storage cask and canister is calculated as follows:

$$M_{st} = W_b R = 1{,}034 \text{kip} - \text{ft.}$$

The resulting factor of safety against overturning due to the design basis flood is:

$$F.S. = \frac{M_{st}}{M_{ot}} = 2.3 \quad > \quad 1.1$$

The friction force resisting sliding is equal to the product of the buoyant weight of the loaded storage cask and the coefficient of static friction between the bottom surface of the storage cask and the surface of the ISFSI pad. A lower bound coefficient of friction of 0.3 is conservatively used for the storage cask sliding analysis. The factor of safety against sliding due to the design basis flood is:

[29] S. F. Hoerner, *Fluid-Dynamics Drag*, Hoerner Fluid Dynamics, P.O. Box 342 Brick Town NJ, 1965.

$$F.S. = \frac{\mu \cdot W_b}{F_d} = 1.2 \quad > \quad 1.1$$

The analysis results show that the storage cask remains upright and does not slide under the design basis flood event.

The flood stream pressure on the projected area of the cask is:

$$p = \frac{F_d}{A} = \frac{47.1}{220.5} = 0.214 \text{ ksf} = 214 \text{ psf}$$

This pressure is lower than the tornado wind pressure calculated in Section 2.3.4.2.2 and analyzed in Sections 3.6.2 and 3.7.9. Therefore, the storage cask stresses during flood are bounded by the wind conditions and no additional analysis is required.

3.7.9 Tornado

The storage cask and transfer cask are designed to withstand loads associated with extreme wind and tornado, which are postulated to occur at an ISFSI located anywhere in the contiguous United States. The tornado design parameters used to evaluate the suitability of the cask include tornado winds and tornado generated missiles. Their characteristics are as shown in Tables 2.3-4 and 2.3-5. The wind generated pressure differentials, or the atmospheric pressure change-induced forces, are considered negligible since the storage cask is a vented structure and the transfer cask is not sealed.

The structural evaluation of the storage cask and transfer cask for local damage, stability, and stresses due to tornado wind and missile loading are provided in the following sections.

3.7.9.1 Storage Cask

3.7.9.1.1 Local Damage Analysis

The storage cask is evaluated for the effects of wind-driven tornado missiles to assure that there is no significant local damage (such as scabbing, spalling, or penetration) that allow the missile to perforate or pass through the storage cask and potentially damage the canister. Local damage to the storage cask is most significant for 'hard' missiles (i.e., missiles which are hard relative to the target). These include a 275-pound, 8-inch diameter armor piercing artillery shell and a 1-inch diameter solid steel sphere. Therefore, local damage of the storage cask is evaluated only for these 'hard' missiles. Three missile impact conditions are evaluated to assure the penetration resistance of the storage cask: 1) horizontal impact of the armor piercing missile on the storage cask side wall, 2) vertical impact of the armor piercing missile on the storage cask cover, and 3) direct impact of the one inch solid steel sphere in the storage cask outlet vent.

Local damage of the storage cask side wall due to horizontal impact of the armor piercing missile is evaluated using the Modified National Defense Research Committee (NDRC) formula as presented by ASCE.[30]

[30] ASCE, *Manual and Report on Engineering Practices*, No.58.

The NDRC formula is presented in the form:

$$X = \sqrt{\frac{4KNW}{D^{0.8}} \cdot \left(\frac{V_s}{1000}\right)^{1.8}}$$

where

$K = \frac{180}{\sqrt{f_c'}}$ concrete strength factor

$N = 1.14$ shape factor for a sharp-nosed missile

D = missile diameter

V_s = missile velocity

W = missile weight

The depth of penetration due to the 275 pound, eight inch diameter armor piercing artillery shell with a horizontal impact velocity of 126 mph (185 feet per second) is 5.4 inches. This value is much less than the reinforced concrete thickness of 30.75 inches. Therefore, the cask wall is not penetrated and no backside spalling occurs.

Local damage of the storage cask steel cover due to vertical impact of the armor piercing missile is evaluated using the Ballistic Research Laboratory (BRL) formula presented by Bechtel.[31] The cover thickness to be just perforated by the missile is:

$$T = \frac{\left(\frac{MV_s^2}{2}\right)^{2/3}}{672D} = \frac{\left(\frac{WV_s^2}{2g}\right)^{2/3}}{672D} = 0.52''$$

and the thickness of the steel plate required to prevent missile perforation is 1.25T = 0.65 inches. The thickness of the storage cask steel cover plate is 1.0 inch. Therefore, the armor piercing missile does not perforate the storage cask steel cover plate.

A direct impact of the one inch solid steel sphere in the storage cask outlet vent is considered to evaluate the potential for damage to the canister shell. The storage cask outlet vents are designed with a step which precludes a small missile from directly impacting the canister. In the event of a horizontal impact of the one inch diameter solid steel sphere directly into the outlet vent, the missile would have to bounce at least twice prior to entering the cask cavity. However, even if it is conservatively assumed that the missile retains its full velocity, the shell thickness required to prevent perforation is 0.034 inches. The thickness of the canister shell is 0.625 inches and, therefore, the missile does not penetrate the canister.

3.7.9.1.2 Stability Analysis

The overturning stability of the storage cask due to the massive high kinetic energy missile impact is evaluated using the principals of conservation of momentum and conservation of

[31] BC-TOP-9A, *Design of Structures for Missile Impact*, Rev. 2, Bechtel Power Corporation, 1974.

energy. The 4,000 pound automobile is the most critical missile for this evaluation because its impact imparts the highest kinetic energy into the cask. The storage cask overturning stability analysis is based upon the lower bound weight of 300,000 pounds and the upper bound C.G. height of 118 inches.

The force from the missile impact is conservatively assumed to act at the top of the storage cask and the storage cask is assumed to rotate about its bottom edge, as shown in Figure 3.7-14. Missile impact test results show that the final velocity of the missile following impact is negligible.[32] Therefore, it is assumed that the entire momentum of the missile is imparted to the storage cask.

The angular velocity of the storage cask after missile impact is found by equating the angular momentum of the missile to the angular momentum of the storage cask as follows:

$$M \cdot V_s \cdot h = I_c \omega$$

where:

M	=	124 slugs, Mass of missile
V_s	=	185 ft/sec (126 mph), Impact velocity of missile
h	=	230 in, Height of long storage cask
I_c	=	Storage cask mass moment of inertia about bottom corner
	=	$2.0 \cdot 10^7$ lbs-in-s^2
ω	=	Angular velocity of storage cask after missile impact

Therefore, the angular velocity of the storage cask after impact is 0.264 radians per second. The kinetic energy of the storage cask due to the rotational velocity is $7.0 \cdot 10^5$ in-lbs. By equating rotational kinetic energy of the storage cask after the impact to the potential energy of the cask for a given rotation about the bottom edge, the storage cask is found to rotate 2° from vertical. This is much less than the 29.9° rotation required to bring the storage cask C.G. over the edge.

The combined effects of the tornado wind and missile loads on the overturning stability of the storage cask are evaluated in accordance with NUREG-0800.[33] The maximum lateral pressure load due to the tornado wind load is applied to the storage cask with a maximum imposed rotation of 2.0° due to the tornado missile load. Applying the wind pressure load to the cask in this configuration, the overturning moment due to tornado wind is $9.35 \cdot 10^6$ in-lbs. The restoring moment for the rotated storage cask is $19.15 \cdot 10^6$ in-lbs. Therefore, the factor of safety against overturning due to the combined effects of the tornado wind and missile loads is 2.05.

The storage cask is also evaluated for sliding using the conservation of linear momentum. Equating the missile momentum to the cask linear momentum after the impact, the cask velocity is found to be 29.6 in/sec. The friction force stopping the cask is determined using the lower bound of the friction coefficient of 0.3 and the lower bound storage cask weight of 300,000 pounds. After subtracting the wind force, which acts on the cask continuously, the net force stopping the cask is 10,319 pounds. With this net force and the initial velocity of

[32] EPRI NP-440, *Full Scale Tornado Missile Impact Tests*, Electric Research Power Institute, 1977.

[33] NUREG 0800, *Standard Review Plan for Nuclear Power Plants*, U.S. Nuclear Regulatory Commission, 1981.

29.6 in/sec, the cask slides 32.9 inches before it is stopped. This conservative sliding distance is less than the storage cask spacing of approximately 3½ feet. Therefore, simultaneous action of the design tornado wind and missile does not cause adjacent storage casks to come in contact.

3.7.9.1.3 Stress Analysis

The storage cask structural analysis for tornado loadings is performed using the finite element model described in Section 3.5.3.1.1. The wind and tornado missile loads are applied simultaneously with the wind applied as a uniform pressure and the automobile missile load spread over a 3 ft by 3 ft area at the top of the cask. These forces are resisted by friction forces at the bottom of the cask.

To maintain equilibrium, the cask internal forces cannot exceed the maximum reaction forces created by its external restraints. Since the storage cask is a free-standing structure, the total applied load cannot exceed the upper bound friction force of $\mu W_c = 0.6 \cdot 335{,}000 = 201{,}000 \text{lbs}$, where 0.6 and 335,000 pounds are the upper bounds of the friction coefficient and the cask weight, respectively. The tornado wind pressure of 356 psf applied over the projected cask area of 220.5 ft^2 and the missile force of 198,000 lbs result in the total force of 276,500 lbs, therefore, the finite element analysis is conservative.

The results of the tornado load combination evaluations are presented in Table 3.7-5 and Table 3.7-6.

3.7.9.2 Transfer Cask

3.7.9.2.1 Local Damage Analysis

Local damage of the transfer cask due to impact of the armor piercing missile is evaluated using the BRL formula presented above. Conservatively using the resultant of the horizontal and vertical missile velocities as the impact velocity, the minimum plate thickness at which missile perforation occurs is 0.67 inches. The plate thickness required to prevent perforation is taken as 25% greater than that value or 0.84 inches. The thickness of the transfer cask structural shell and end plates are 1.5 inch and 3.0 inch, respectively. These results show that the armor piercing missile does not perforate the transfer cask. Therefore, the transfer cask adequately protects the canister and spent fuel from damage due to the tornado missile loading.

The transfer cask neutron shield jacket thickness is not sufficient to prevent perforation of the armor piercing missile. Therefore, the liquid neutron shielding material could be lost as a consequence of a tornado missile impact. The transfer cask is evaluated for a loss of neutron shielding event in Section 3.7.2 as well as in Chapters 4 and 5 of this FSAR.

3.7.9.2.2 Stability Analysis

The stability of the transfer cask with the DBT missile striking in the most vulnerable position is evaluated to show that the sliding and/or overturning of the transfer cask, secured to the transfer trailer and skid, does not occur. The transfer cask stability analysis is performed using methodology similar to that used for the storage cask stability analysis. The force from the missile impact is conservatively assumed to act at the middle of the transfer cask. The transfer cask, which is attached to the transfer skid and trailer, is assumed to rotate about the outside edge

of the transfer trailer tires, as shown in Figure 3.7-15. The weights of the transfer skid and trailer are conservatively ignored in the transfer cask overturning evaluation.

The angular velocity of the transfer cask after missile impact is found by equating the angular momentum of the missile to the angular momentum of the transfer cask as follows:

$$M \cdot V_s \cdot h = I_c \omega$$

where:

M = 124 slugs, Mass of missile

V_s = 185 ft/sec (126 mph), Impact velocity of missile

h = 9.0 ft (108 in), Maximum height to centerline of transfer cask

I_c = Transfer cask mass moment of inertia about bottom corner

$$= M_c[\left(\frac{3R^2 + H^2}{12}\right) + d^2] = 0.77 \cdot 10^6 \text{ lb-ft-s}^2$$

R = 3.27 ft (39.2 in), Radius of transfer cask (neglecting neutron shield)

H = 16.83 ft (202 in), Height of transfer cask (neglecting ram access cover)

r = 5.46 ft (65.5 in), Half width of transfer trailer wheel base

d = $\sqrt{h^2 + r^2}$ = 10.53 ft, Moment arm to transfer cask c.g.

M_c = 5,590 slugs (180 kips), Mass of transfer cask (lower bound)

ω = Angular velocity of transfer cask after missile impact

Therefore, the angular velocity of the transfer cask after impact is 0.269 radians per second. The kinetic energy of the transfer cask due to the rotational velocity is $2.786 \cdot 10^4$ lb-ft. By equating rotational kinetic energy of the transfer cask after the impact to the potential energy of the cask for a given rotation about the bottom edge, the transfer cask is found to rotate 1.7° from vertical. This is much less than the 31.3° rotation required to overturn the transfer cask.

The combined effects of the tornado wind and missile loads on the overturning stability of the transfer cask are evaluated in accordance with NUREG-0800. The maximum lateral pressure load due to the tornado wind load is applied over a projected area of transfer cask, skid and trailer. The restoring moment is calculated assuming a maximum imposed rotation of 1.7° due to the tornado missile load. The overturning moment due to tornado wind load is $5.5 \cdot 10^5$ ft-lbs. The restoring moment for the rotated storage cask is $9.4 \cdot 10^5$ ft-lbs. Therefore, the factor of safety against overturning due to the combined effects of the tornado wind and missile loads is 1.7.

3.7.9.2.3 Stress Analysis

The transfer cask stresses due to the missile impact are evaluated using a combination of closed form hand calculations and finite element analysis. The maximum impact force developed by the missile is determined by the formula from Bechtel's BC-TOP-9A. The force is calculated as

$$F_{max} = 0.625 \cdot V_s W = 462 \text{ kips}$$

where the missile velocity and weight are 185 ft/sec and 4,000 pounds, respectively, as defined above.

The transfer cask stresses are determined for top and bottom end missile impacts, as well as a side missile impact at the cask mid-length, as shown in Figure 3.7-16. These analyses are summarized below:

Top End Impact

The missile impact load on the top end of the transfer cask is applied as a uniform pressure in combination with the tornado wind pressure load. The bending stresses in the top cover due to the uniform pressure loading are calculated assuming the top cover plate behaves as a simply supported annular plate. The maximum bending stress in the top cover plate due to the combined tornado wind and missile loading, determined using closed form hand calculations, is 49.5 ksi, compared to the ASME allowable primary membrane plus bending stress of 66.0 ksi.

The stresses in the transfer cask structural shell at the lower trunnion locations are calculated by scaling the stresses due to the vertical handling condition from Section 3.5.3.3.2. The transfer cask is secured to transfer trailer at the four trunnions. However, the full longitudinal reaction load due to the combined effects of the tornado wind and missile loads is applied to the lower trunnions since the upper trunnions are not restrained longitudinally. The reaction load at each of the lower trunnions is 243.2 kips. This is approximately 2.43 times the lower trunnion reaction loads for the vertical handling condition. The maximum membrane plus bending stress in the transfer cask structural shell at the lower trunnion location due to the reaction load is 35.4 ksi compared to the ASME allowable stress of 66.0 ksi.

Bottom End Impact

The missile impact load on the bottom end of the transfer cask is applied as a uniform pressure in combination with the tornado wind pressure load. The bending stresses in the bottom cover due to the uniform pressure loading are calculated assuming the bottom cover plate behaves as a simply supported plate. The maximum bending stress in the bottom cover plate due to the combined tornado wind and missile loading, determined using closed form hand calculations, is 3.8 ksi, compared to the ASME allowable primary membrane plus bending stress of 66.0 ksi.

The stresses in the transfer cask structural shell at the lower trunnion locations due to the combined effects of the tornado wind and missile loads will be approximately equal to those due to a top end missile impact. As shown above, the transfer cask structural shell stresses at the lower trunnion locations are within ASME code allowables.

Side Impact

Figure 3.7-16 shows the transfer cask loads and reactions for the combined tornado wind and missile loading. Lateral loading on the transfer cask is reacted in bearing by the two skid trunnion towers on one side of the cask. The maximum stresses in the transfer cask structural shell will occur near the upper and lower trunnions on the side opposite the applied loading due to the relative magnitude and concentration of the trunnion reaction loads. The force on the trunnions due to tornado wind plus missile loads is 542 kips or 271 kips per trunnion. The stresses in the structural shell are calculated by scaling the finite element model results for the

on-site movement evaluation discussed in Section 3.5.3.3.2 for a load of 11 kips applied to the upper trunnion and 10 kips applied to the lower trunnion. The resulting maximum membrane plus bending stress intensity in the structural shell is 26.0 ksi compared to the ASME code allowable of 66.0 ksi.

The results of the transfer cask stress analysis show that no significant structural damage occurs that would prevent the transfer cask from performing its primary safety functions or affect the ability to retrieve the canister and/or fuel assemblies.

3.7.10 Earthquake

The storage cask and transfer cask factors of safety due to Design Basis Earthquake (DBE) and all associated load combinations are evaluated for all possible modes of failure. As stated in Section 2.3.4.4, the DBE peak accelerations are defined as 0.25*g* in two orthogonal horizontal directions and 0.25*g* in the vertical direction. From the horizontal response spectra in Regulatory Guide 1.60,[34] these amplitudes correspond to a maximum ground velocity of 15 in/sec in each horizontal direction. The cask lowest frequency is calculated to be 33 Hz and, therefore, no amplification of ground motion is expected.

The failure modes evaluated include overturning stability, sliding stability, and structural failure of the casks due to internal forces and moments. The overturning analysis is conservatively performed using static balance of the overturning and restoring moments. Peak accelerations in all three directions are assumed to act simultaneously and in the most unfavorable phase (i.e., the vertical acceleration is assumed to reduce the restoring moment). The sliding analysis is performed using the methodology of BC-TOP-4[35] which is based on conservation of energy principles. The analyses of the storage cask and transfer cask for the design basis seismic loads demonstrate that they do not tip over as a result of the earthquake. In addition, the free space between storage casks is shown to be sufficient to preclude adjacent storage casks from coming in contact with each other as a result of a DBE. The structural evaluation of the storage cask and transfer cask for this event are provided in the following sections.

3.7.10.1 Storage Cask

3.7.10.1.1 Overturning Stability

The storage cask is analyzed by a static balance of the overturning and restoring moments. The overturning force from the earthquake motion acts on the cask through the center of gravity as shown in Figure 3.7-17. The evaluation is performed for the long storage cask in the free standing vertical storage condition. The overturning moment of the storage cask for this condition is calculated as:

---

[34] Regulatory Guide 1.60, *Design Response Spectra for Seismic Design of Nuclear Power Plants*, US Nuclear Regulatory Commission, 1973.

[35] BC-TOP-4, *Seismic Analyses of Structures and Equipment for Nuclear Power Plants*, Rev. 4, Bechtel Power Corporation, 1979.

$$M_o = Wh_{cg}\sqrt{a_x^2 + a_y^2} = 41.7W$$

where:

W	=	Weight of the storage cask
h_{cg}	=	118 in, Height of the center of gravity of the cask (upper bound)
a_x, a_y	=	0.25*g*, DBE horizontal accelerations

The restoring moment of the cask is calculated as follows:

$$M_r = WR(1 - a_v) = 51.0W$$

where:

R	=	68 in, Radius of the storage cask footprint (includes bottom chamfer)
a_v	=	0.25*g*, DBE vertical acceleration

The factor of safety against overturning due to the DBE is:

$$\frac{M_r}{M_o} = \frac{51.0W}{41.7W} = 1.22$$

The safety factor of 1.22 for this case is higher than the minimum requirement of 1.1.

In addition, a possibility of cask overturning due to failure of the storage pad is considered. The worst possible condition would be caused by a large pad displacement directly under the storage cask center of gravity as shown in Figure 3.7-18. The pad displacement, s_a, that would result in the minimum allowable safety factor against overturning is calculated as follows:

$$\theta = \tan^{-1}\left(\frac{h_{cg}}{R}\right) = \tan^{-1}\left(\frac{118}{68}\right) = 60.1^\circ \qquad \gamma = 90° - \theta = 29.9°$$

$$s = R \sin\gamma = 68 \sin 29.9° = 33.9 \text{ inches}$$

where:

s	=	Pad displacement that brings the cask C.G. over the corner
θ, γ	=	Angles as shown on Figure 3.7-18
h_{cg}	=	118 inches, Height of the center of gravity
R	=	68 inches, Radius of the storage cask

The displacement of a failed storage pad resulting in an unstable configuration is reduced by a safety factor of 1.1 based on the requirements of ANSI/ANS-57.9, Section 6.17.4.1, to establish the maximum allowable displacement:

$$s_a = \frac{s}{1.1} = 30.8 \text{ inches}$$

The applicability to storage sites is discussed in Section 2.6.3.

3.7.10.1.2 Sliding Stability

Sliding stability of the storage cask is evaluated to assure that free space provided between adjacent casks is sufficient to preclude impacts between casks due to DBE loading. The sliding stability of the storage cask for the DBE is evaluated in accordance with the methodology presented in BC-TOP-4 for a free-standing rigid body. The maximum sliding displacement resulting from the DBE is given by:

$$d_{max} = \frac{V_{hmax}^2}{2 \cdot \mu_s \cdot g} \cdot \left(1 - \frac{\mu_s}{a_{hmax}}\right) = \frac{V_x^2 + V_y^2}{2 \cdot \mu_s \cdot g} \cdot \left(1 - \frac{\mu_s}{\sqrt{a_x^2 + a_y^2}}\right) = 0.3''$$

where:

d_{max}	=	Maximum sliding displacement
V_{hmax}	=	Maximum horizontal ground velocity
μ_s	=	0.3, Net horizontal kinetic resistance coefficient (lower bound)
V_x, V_y	=	15 in/sec, Maximum horizontal velocities in two orthogonal directions
a_x, a_y	=	Maximum horizontal accelerations in two orthogonal directions

The maximum sliding distance of 0.3 inch is insignificant and would not cause an impact between adjacent casks.

3.7.10.1.3 Stress Calculations

The stresses in the storage cask due to the design basis earthquake are calculated using the finite element analysis described in Section 3.5.3.1.1. Bounding DBE loads of 0.82*g* horizontally and 0.51*g* vertically are assumed for the stress analysis (the actual design values are 0.25*g* vertically and $g\sqrt{0.25^2 + 0.25^2} = 0.35g$ horizontally). The storage cask is assumed to be supported at the bottom.

The storage cask stress analysis for the seismic load combination is performed with and without thermal loading. The results are presented in Table 3.7-5 and Table 3.7-6.

3.7.10.2 Transfer Cask

3.7.10.2.1 Overturning Stability

The transfer cask is analyzed for stability in an earthquake using the static balance of the overturning and restoring moments, as outlined above for the storage cask. The overturning stability of the transfer cask is evaluated while secured horizontally on the transfer skid and trailer. The cask is considered as a rigid body supported by a bolted frame structure representing the skid and the trailer.

The overturning moment of the transfer cask, skid, and trailer for this condition is calculated as:

$$M_o = Wh_{cg}\sqrt{a_x^2 + a_y^2} = 38.2W$$

where:

M_o	=	Moment that causes overturning due to earthquake
W	=	Weight of the transfer cask, skid, and trailer
h_{cg}	=	108 inches, Height of the center of gravity of cask, skid, and trailer
a_x, a_y	=	0.25g, DBE horizontal accelerations

The restoring moment of the cask is calculated as follows:

$$M_r = W\left(\frac{s}{2}\right)(1 - a_v) = 49.1W$$

where:

M_r	=	Moment that restores the cask and trailer to the original position
s	=	131 inches, Wheel base of the trailer
a_v	=	0.25*g*, DBE vertical acceleration

The factor of safety against overturning due to the DBE is:

$$\frac{M_r}{M_o} = \frac{49.1W}{36.1W} = 1.29$$

The safety factor of 1.29 is higher than the minimum requirement of 1.1 and the transfer cask and trailer will not overturn due to the DBE where the pad remains whole.

In addition, the possibility of a transfer cask overturning due to failure of the storage pad is considered in the same manner as for the storage cask in Section 3.7.10.1.1. The horizontal transfer cask is more stable than the vertical storage cask since it has a lower center of gravity (108 inches) and a greater support base (75 inches as shown by the distance r in Figure 3.7-19). The ground displacement needed to overturn a transfer cask is bounded by that for a storage cask.

3.7.10.2.2 Sliding Stability

Sliding of the transfer cask and trailer is bounded by that of the storage cask (Section 3.7.10.1.2) because the friction coefficient for tires on concrete is higher than that for concrete on concrete. Therefore, sliding of the transfer cask during an earthquake is insignificant.

3.7.10.2.3 Stress Calculations

The transfer cask is evaluated for the DBE while supported horizontally at the upper and lower trunnions by the transfer skid and trailer. Stresses in the transfer cask due to the DBE are calculated using hand calculations and finite element analysis. Vertical loads on the transfer cask are reacted at all four trunnions, longitudinal loads on the transfer cask are reacted by the two lower cask trunnions, and transverse loads are reacted by the upper and lower trunnion on one side of the cask. The transfer cask is conservatively evaluated for the combined effects of a 1.0*g* horizontal acceleration normal to the cask longitudinal centerline (transverse), a 1.0*g* horizontal acceleration parallel to the longitudinal axis, and a 0.60*g* vertical acceleration.

The membrane stress in the transfer cask structural shell due to resultant of 1.0*g* transverse and 0.60*g* vertical accelerations is 0.9 ksi, assuming the transfer cask is simply supported at the upper and lower trunnions. The stresses in the transfer cask structural shell near the trunnion locations due to reactions of 30 kips tangential (vertical), 100 kips longitudinal (horizontal 1), and 100 kips radial (horizontal 2) are calculated using the transfer cask finite element results described in Section 3.5.3.3.2. The stresses are scaled by the ratio of seismic loads to the respective loads in Table 3.5-5. The resulting primary membrane and membrane plus bending stress intensities in the transfer cask structural shell are 8.6 ksi and 30.0 ksi at the lower trunnions and 5.7 ksi and 12.8 ksi at the upper trunnions.

The bending stress in the ram cover plate due to the 1.0*g* longitudinal acceleration is insignificant. The bending stresses in the top cover plate and bottom cover plate due to the 1.0*g* longitudinal acceleration, assuming each plate supports its self weight and the weight of the canister, are 7.1 ksi and 0.7 ksi, respectively.

There are no significant structural consequences for the DBE event. The transfer cask does not experience any permanent or excessive deformations which damage the canister or prevent retrieval of the fuel. The ability of the transfer cask to maintain criticality control and provide radiation shielding is not affected by the DBE event.

3.7.11 Accident Condition Load Combinations

The accident condition load combinations for the storage cask and the transfer cask are defined in accordance with Section 2.3. The load combinations include normal loads presented in Section 3.5 and accident loads presented in this section.

The load combinations for the storage cask reinforced concrete sections and steel components are provided in Table 3.7-5 and Table 3.7-6, respectively. Note that out of the four kinds of live loads described in Section 3.5.3.1.2, only L_1 need be combined with accident conditions such as E, A, W, and W_t. The dead weight and thermal loads are also included as appropriate.

The transfer cask maximum stresses due to the individual accidents are presented in Table 3.7-8 and combined in Table 3.7-9.

The load combination tables show that stresses in all FuelSolutions™ components are within the applicable code allowables. The transfer and storage casks are adequate to withstand the postulated accident conditions.

Table 3.7-1 - Storage Cask End Drop Finite Element Model Material Properties

Model Component	Material property		
	Young's Modulus, E (psi)	Poisson's Ratio, ν	Mass Density, ρ ($lb\text{-}s^2/in^4$) [lbs/ft^3]
Concrete Cask Body	$4x10^6$	0.17	$2.478x10^{-4}$ [165]
Canister Shell Assembly	$30x10^6$	0.29	$7.304x10^{-4}$ [488]
Canister Basket/Fuel Cylinder	$2.31x10^6$	0.29	$1.884x10^{-4}$ [126]
Concrete Pad	Material Type 16(1)	0.22	$2.097x10^{-4}$ [140]
Pad Reinforcement	$30x10^6$ psi	0.3	N/A
Underlying Soil	Varies(2)	0.45	$2.040x10^{-4}$ [136]

Notes:

(1) LS-DYNA Material Type 16 was used for the concrete. This material is based on the concrete strength of 4,500 psi. The ISFSI pad shall be made out of concrete with the 28-day nominal strength (f_c') of 3,000 psi or less. The strength used conservatively accounts for age-hardening of concrete.

(2) Three separate evaluations are performed with Young's modulus values of 10,000 psi, 20,000 psi, and 30,000 psi. See Table 3.7-2.

Table 3.7-2 - ISFSI Concrete Pad Material Properties[1]

ISFSI Pad Thickness, Reinforcement, and Soil Stiffness Combinations		
Pad Thickness	**Soil Elastic Modulus[2]**	**Maximum Reinforcing Steel [2]**
36 inches	10,000 psi or less	#8 EWEF @ 12”
30 inches	20,000 psi or less	#9 EWEF @ 18”
24 inches	30,000 psi or less	#8 EWEF @ 18”

Notes:

(1) The storage pad properties shown represent typical parameters for construction of three different ISFSI pads, all of which are acceptable. The site-specific ISFSI pad design should be evaluated by the licensee to confirm that the design basis deceleration loads for the storage cask are not exceeded.

(2) For each pad thickness, the analysis conservatively assumes the highest permitted reinforcement ratio and elastic modulus for the underlying soil to calculate the maximum *g*-loads.

Table 3.7-3 - Summary of Storage Cask End Drop Analysis Results

Pad & Soil Combination	Response Parameter	Rigid-Body Response [1]		
		Storage Cask	Canister Shell	Basket
3'-0" / 10 ksi	Peak Acceleration	57*g*	28*g*	25*g*
	Pulse Duration (msec.)	5	35	35
	Pulse Shape	Isosceles Triangle	½-Sine Wave	½-Sine Wave
2'-6" / 20 ksi	Peak Acceleration	45*g*	27	25*g*
	Pulse Duration (msec.)	20	35	35
	Pulse Shape	½-Sine Wave	½-Sine Wave	½-Sine Wave
2'-0" / 30 ksi	Peak Acceleration	44*g*	25*g*	26*g*
	Pulse Duration (msec.)	17	35	35
	Pulse Shape	½-Sine Wave	½-Sine Wave	½-Sine Wave
Sensitivity Run 3'-0" / 10 ksi pad and soil size increase by 50%	Peak Acceleration	57*g*	27*g*	25*g*
	Pulse Duration (msec)	5	35	35
	Pulse Shape	Isosceles Triangle	½-Sine Wave	½-Sine Wave

Notes

(1) The accelerations values are rounded up to the next whole number.

Table 3.7-4 - Storage Cask Impact Limiter Foam Dynamic Stress-Strain Data for Tip-Over Analysis

Strain	Hard Impact (0°F ambient)		Soft Impact (100°F ambient)	
	Crush Strength (psi)[1]	Crush Force (kips)[2]	Crush Strength (psi)[1]	Crush Force (kips)[2]
0.1	644.2	912.2	459.0	325.0
0.2	633.0	896.4	446.3	316.0
0.3	663.2	939.0	477.5	338.1
0.4	729.1	1032.5	534.7	378.6
0.5	859.0	1216.4	638.9	452.4
0.6	1179.2	1669.8	871.5	617.1
0.65	1513.0	2142.4	1127.1	798.0

Notes:

(1) The "hard" impact (upper bound) properties include cold conditions and upper bound of manufactured strength. The "soft" impact (lower bound) properties include hot conditions and lower bound of manufactured strength. Both data include dynamic effects.

(2) The "hard" impact (upper bound) force assumes crushing of two impact limiter strips under each leg of J-skid. The "soft" impact (lower bound) force assumes crushing of only one impact limiter strip under each leg of J-skid.

Table 3.7-5 - Storage Cask Reinforced Concrete Evaluation Summary for Accident Load Combinations (3 Pages)

Components	Load Combinations (1)	Allowable(2)	Design Margin(3)
	$D_v + L_1 + T_{a,v}$		
	Forces and stresses, kips/ft or ksi		
Concrete Hoop Reinforcement Stress	43.8	54	+0.23
Concrete Longitudinal Reinforcement Stress	30.2	54	+0.79
Concrete Bottom Radial Reinforcement Stress	37.2	54	+0.45
Concrete Hoop Shear Force (θR)	91.1	202.0	+1.22
Concrete Longitudinal Shear Force (zR)	106.9	192.3	+0.80
Shear Key Lateral Force	3.9	30.6	+6.85
Shear Lug Axial Force (4)	8.1	9.7	+0.20

Table 3.7-5 - Storage Cask Reinforced Concrete Evaluation Summary for Accident Load Combinations (3 Pages)

Components	Load Combinations (1)					Allowable(2)	Design Margin(3)
	$L_1 + T_v + A_{end}$	$L_1 + A_{end}$	$T_v + A_{side}$	$T_h + A_{side}$	A_{side}		
	Forces and stresses, kips/ft or ksi						
Concrete Hoop Reinforcement Stress	30.8	9.1	52.7	46.4	35.1	59.4	+0.13
Concrete Longitudinal Reinforcement Stress	27.7	14.4	26.2	24.5	18.0	59.4	+1.14
Concrete Bottom Radial Reinforcement Stress	19.0	13.1	8.0	11.5	2.8	59.4	+2.13
Concrete Hoop Shear Force (θR)	136.3	134.8	116.5	112.4	107.6	222.3	+0.63
Concrete Longitudinal Shear Force (zR)	140.8	141.4	66.9	62.9	43.5	211.5	+0.50
Shear Key Lateral Force	14.7	15.3	17.2	15.7	13.6	33.7	+0.96
Shear Lug Axial Force(4)	11.2	10.0	9.7	10.2	2.2	12.1	+0.08

Table 3.7-5 - Storage Cask Reinforced Concrete Evaluation Summary for Accident Load Combinations (3 Pages)

Components	Load Combinations (1)				Allowable(2)	Design Margin(3)
	$D_v + L_1 + T_v + E$	$D_v + L_1 + E$	$D_v + L_1 + T_v + (W + W_t)$	$D_v + L_1 + (W + W_t)$		
	Forces and stresses, kips/ft or ksi					
Concrete Hoop Reinforcement Stress	33.6	5.2	39.4	12.7	59.4	+0.51
Concrete Longitudinal Reinforcement Stress	18.6	3.6	15.9	8.9	59.4	+2.19
Concrete Bottom Radial Reinforcement Stress	8.4	2.7	8.3	2.8	59.4	+6.07
Concrete Hoop Shear Force (θR)	63.7	20.1	65.5	22.0	222.3	+2.39
Concrete Longitudinal Shear Force (zR)	26.1	20.1	32.2	18.4	211.5	+5.57
Shear Key Lateral Force	9.0	7.5	12.3	10.6	33.7	+1.74
Shear Lug Axial Force(4)	9.3	0.7	9.4	0.9	12.1	+0.29

Table 3.7-5 Notes:
(1) (1) Live and thermal load designations are presented in Section 3.5.3.1.2.
(2) The allowable stresses and forces are determined per Table 3.1-2.
(3) Design margin is equal to (Allowable/Stress) - 1.
(4) Shear lug forces are in kips/inch.

Table 3.7-6 - Storage Cask Steel Component Evaluation Summary for Accident Load Combinations (3 Pages)

Components	Load Combinations[1] $D_v + L_1 + T_{a,v}$ Stresses, ksi	Allowable[2]	Design Margin[3]
Liner Shell Membrane Plus Bending Stress	25.2	32.0	+0.27
Liner Shell Shear Stress	10.6	17.5	+0.65
Top Cover Membrane Plus Bending Stress	5.9	121.7	+19.6
Top Cover Shear Stress	0.6	53.5	+88.2
Liner Bottom Plate Membrane Stress	16.4	35.0	+1.13
Liner Bottom Plate Membrane Plus Bending Stress	42.1	43.9	+0.04
Liner Bottom Plate Shear Stress	3.9	19.3	+3.95
Liner Bottom Plate Weld Shear Stress	28.0	29.4	+0.05
Tie Rod Tension Force[4]	135.3	187.0	+0.38

Table 3.7-6 - Storage Cask Steel Component Evaluation Summary for Accident Load Combinations (3 Pages)

Components	Load Combinations(1)					Allowable(2)	Design Margin(3)
	$L_1 + T_v + A_{end}$	$L_1 + A_{end}$	$T_v + A_{side}$	$T_h + A_{side}$	A_{side}		
	Stresses, ksi						
Liner Shell Membrane Plus Bending Stress	10.4	8.9	12.8	20.4	7.6	32.0	+0.57
Liner Shell Shear Stress	4.5	2.1	5.5	9.2	2.0	17.5	+0.90
Top Cover Membrane Plus Bending Stress	86.5	85.3	6.9	7.3	6.5	121.7	+0.41
Top Cover Shear Stress	5.9	5.9	2.0	2.1	2.0	53.5	+8.07
Liner Bottom Plate Membrane Stress	4.8	8.6	13.0	13.3	12.9	35.0	+1.63
Liner Bottom Plate Membrane Plus Bending Stress	30.3	30.5	18.2	18.9	15.5	43.9	+0.44
Liner Bottom Plate Shear Stress	2.3	2.3	3.1	3.5	3.1	19.3	+4.51
Liner Bottom Plate Weld Shear Stress	8.7	13.5	14.8	13.2	7.4	29.4	+0.99
Tie Rod Tension Force(4)	76.4	78.4	111.9	127.4	108.9	187.0	+0.47

Table 3.7-6 - Storage Cask Steel Component Evaluation Summary for Accident Load Combinations (3 Pages)

Components	Load Combinations[1]				Allowable[2]	Design Margin[3]
	$D_v + L_1 + T_v + E$	$D_v + L_1 + E$	$D_v + L_1 + T_v + (W + W_t)$	$D_v + L_1 + (W + W_t)$		
	Stresses, ksi					
Liner Shell Membrane Plus Bending Stress	11.4	1.6	11.0	1.6	30.1	+1.64
Liner Shell Shear Stress	4.6	0.3	4.6	0.4	17.5	+2.80
Top Cover Membrane Plus Bending Stress	4.1	2.9	3.4	2.2	114.6	+27.0
Top Cover Shear Stress	0.3	0.2	0.3	0.2	53.5	+177
Liner Bottom Plate Membrane Stress	2.9	1.7	5.4	0.7	33.0	+5.11
Liner Bottom Plate Membrane Plus Bending Stress	8.1	2.2	10.4	1.3	41.3	+2.97
Liner Bottom Plate Shear Stress	0.6	0.3	1.0	0.2	19.3	+18.3
Liner Bottom Plate Weld Shear Stress	5.5	2.4	8.4	1.1	29.4	+2.50
Tie Rod Tension Force[4]	109.6	106.7	116.4	110.3	187.0	+0.61

Table 3.7-6 Notes:

(1) Live and thermal load designations are presented in Section 3.5.3.1.2.

(2) The allowable stresses are determined per Table 3.1-4.

(3) Design margin is equal to (Allowable/Stress) - 1.

(4) Tie rod forces are in kips.

Table 3.7-7 - Transfer Cask Side Drop Finite Element Model Material Properties

Model Component	Material Property		
	Young's Modulus, E (psi)	Poisson's Ratio, ν	Mass Density, ρ ($lb\text{-}s^2/in^4$) [lb/ft^3]
Transfer Cask Steel (w/o Outer Shell)	27.0×10^6	0.29	8.264×10^{-4} [551]
Transfer Cask Outer Shell	27.0×10^6	0.29	11.78×10^{-4} [786]
Transfer Cask Gamma Shield	2.27×10^6 (1)	0.44	10.62×10^{-4} [708]
Canister Assembly	2.31×10^6	0.29	2.687×10^{-4} [166]
Concrete Pad	Material Type 16(2)	0.22	2.097×10^{-4} [140]
Pad Reinforcement	30.0×10^6	0.3	N/A
Underlying Soil	15,000	0.45	2.040×10^{-4} [136]

Notes:

(1) Elasto-plastic lead properties at 100°F are also used. See Table 3.3-8.

(2) LS-DYNA Material Type 16 was used for the concrete. This material is based on the concrete strength of 4,500 psi. The canister transfer pad shall be made out of concrete with the 28-day nominal strength (f_c') of 3,000 psi or less. The strength used conservatively accounts for age-hardening of concrete.

Table 3.7-8 - Transfer Cask Stresses for Accident Conditions

Cask Component	Stress Type	Stress Intensity (ksi)			
		Accident Thermal (T_a)[1]	Side Drop (A)	Tornado Missile (W_t)	Earthquake (E)
Ram Access Cover	P_m	N/A	36.4	[2]	[2]
	$P_m + P_b$	N/A	38.4	49.5	7.1
Top Cover	P_m	N/A	36.4	[2]	[2]
	$P_m + P_b$	N/A	38.4	49.5	7.1
Bottom Cover	P_m	N/A	37.8	[2]	[2]
	$P_m + P_b$	N/A	46.7	3.8	0.7
Top Forging	P_m	N/A	39.0	1.3	[2]
	$P_m + P_b$	N/A	54.3	3.7	0.9
Bottom Forging	P_m	N/A	38.6	1.3	[2]
	$P_m + P_b$	N/A	51.0	3.7	0.9
Inner Liner	P_m	N/A	33.8	3.1	[2]
	$P_m + P_b$	N/A	36.0	9.5	0.9
Structural Shell (away from trunnions)	P_m	N/A	20.3	1.3	[2]
	$P_m + P_b$	N/A	60.4	3.7	0.9
Structural Shell (at upper trunnions)	P_m	N/A	36.1	8.7	5.7
	$P_m + P_b$	N/A	47.9	23.7	12.8
Structural Shell (at lower trunnions)	P_m	N/A	36.1	10.4	8.6
	$P_m + P_b$	N/A	47.9	35.4	30.0
Ram Access Cover Bolts	Shear	0.0	[4]	[4]	[3]
	Tension	30.0	[4]	[4]	[3]
Top Cover Bolts	Shear	0.0	11.0	16.3	[3]
	Tension	30.0	10.8	0.0	[3]
Bottom Cover Bolts	Shear	0.0	11.5	16.3	[3]
	Tension	30.0	43.1	0.0	[3]

Notes:

(1) Thermal stresses in the transfer cask body are secondary and need not be evaluated for Service Level D conditions.

(2) Stresses are insignificant.

(3) Bounded by stresses due to side drop.

(4) Ram access cover bolts are not designed to withstand loads due to postulated tornado missile and transfer cask side drop conditions.

Table 3.7-9 - Transfer Cask Accident Load Combination Results

Cask Component	Stress Type	Load Combination Stress[1] (ksi)				Allow. S.I. (ksi)[3]	Design Margin[4]
		5+ ($D+T_a$)[2]	6 (D+T+E)	7 (D+T+A)	8 ($D+T+W_t$)		
Ram Access Cover	P_m	0.0	0.0	36.4	0.0	46.2	+0.27
	$P_m + P_b$	0.3	7.4	38.4	49.8	66.0	+0.33
Top Cover	P_m	0.0	0.0	36.4	0.0	46.2	+0.27
	$P_m + P_b$	0.3	7.4	38.4	49.8	66.0	+0.33
Bottom Cover	P_m	0.4	0.4	37.8	0.4	46.2	+0.22
	$P_m + P_b$	0.7	1.4	46.7	4.6	66.0	+0.41
Top Forging	P_m	1.8	1.8	39.0	3.1	43.1	+0.10
	$P_m + P_b$	7.1	8.1	54.3	10.8	61.5	+0.13
Bottom Forging	P_m	1.8	1.8	38.6	3.1	43.1	+0.12
	$P_m + P_b$	7.1	8.1	51.0	10.8	61.5	+0.21
Inner Liner	P_m	4.2	4.2	33.8	7.2	44.9[5]	+0.33
	$P_m + P_b$	4.6	5.5	36.0	14.0	64.4[5]	+0.79
Structural Shell	P_m	2.5	10.0	36.1	11.9	46.2	+0.28
	$P_m + P_b$	7.1	34.8	60.4	40.2	66.0	+0.09
Ram Access Cover Bolts	Shear	1.3	[6]	[7]	[7]	50.6	+37.9
	Tension	35.1	[6]	[7]	[7]	84.3	+1.40
	Combined[8]	0.17	[6]	[7]	[7]	1.0	+4.88
Top Cover Bolts	Shear	0.6	[6]	11.6	16.9	52.5	+2.10
	Tension	35.1	[6]	44.1	33.3	87.5	+0.98
	Combined[8]	0.17	[6]	0.30	0.25	1.0	+2.33
Bottom Cover Bolts	Shear	0.6	[6]	12.1	16.9	52.5	+2.11
	Tension	35.1	[6]	77.3	34.2	87.5	+0.13
	Combined[8]	0.17	[6]	0.83	0.26	1.0	+0.20

Notes:

(1) Thermal stresses are secondary and need not be evaluated for Service Level D conditions.
(2) The T_a condition stresses are compared against the allowables at 600°F which are shown only from the ram access cover bolts since load combination 5 does not control for any other components.
(3) Allowable stresses are based on a temperature of 300°F, unless otherwise noted.
(4) Design margin is equal to (Allowable/Stress) - 1.
(5) Allowable stresses for the inner shell are based on the temperature of 400°F.
(6) Bounded by load combination number 7.
(7) Ram access cover bolts are not designed to withstand loads due to postulated tornado missile and transfer cask side drop conditions.
(8) For combined shear and tension, $(f_t^2/F_{tb}^2) + (f_v^2/F_{vb}^2) \leq 1.0$.

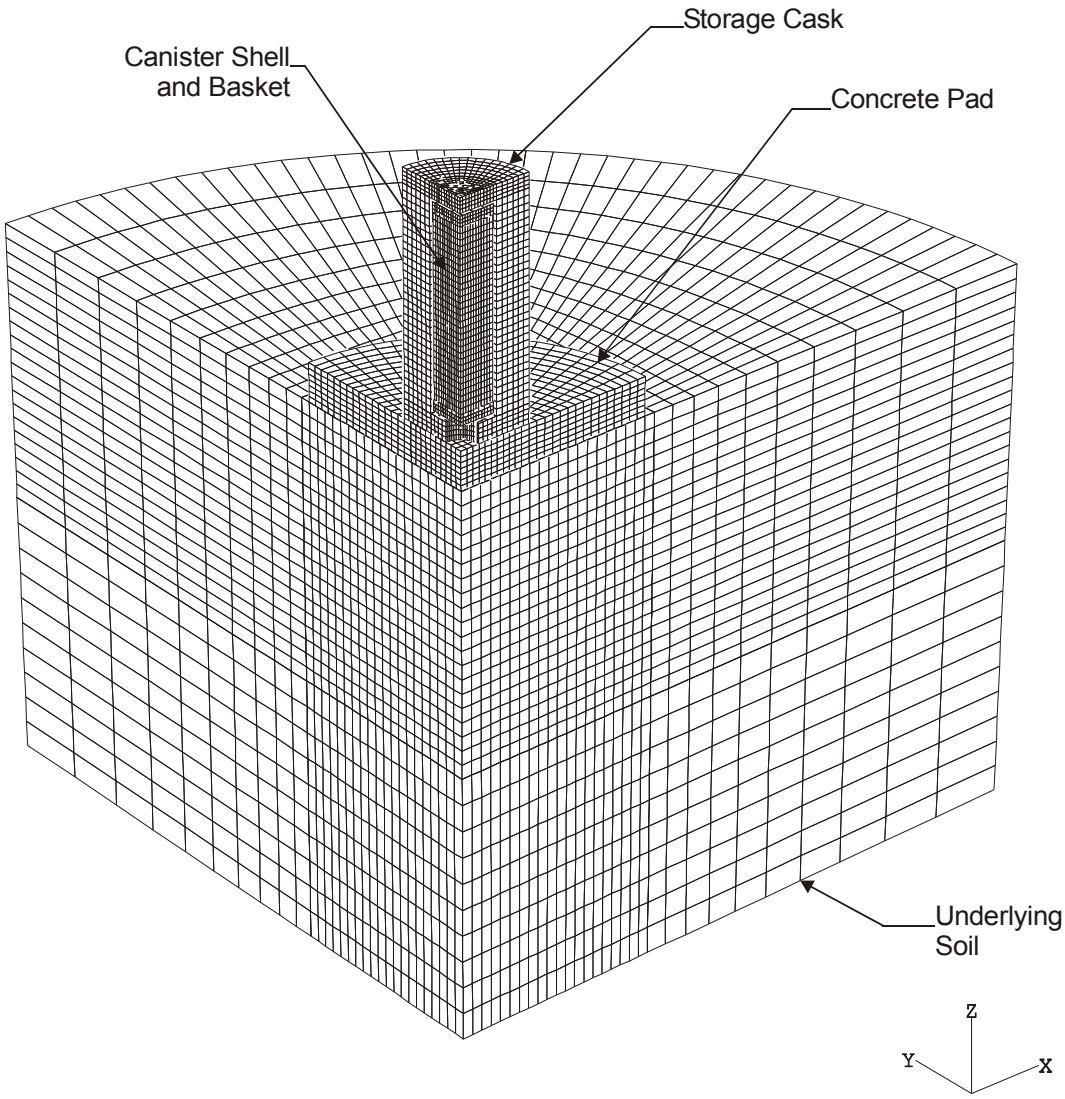

Figure 3.7-1 - Storage Cask LS-DYNA Model for End Drop Load Calculation

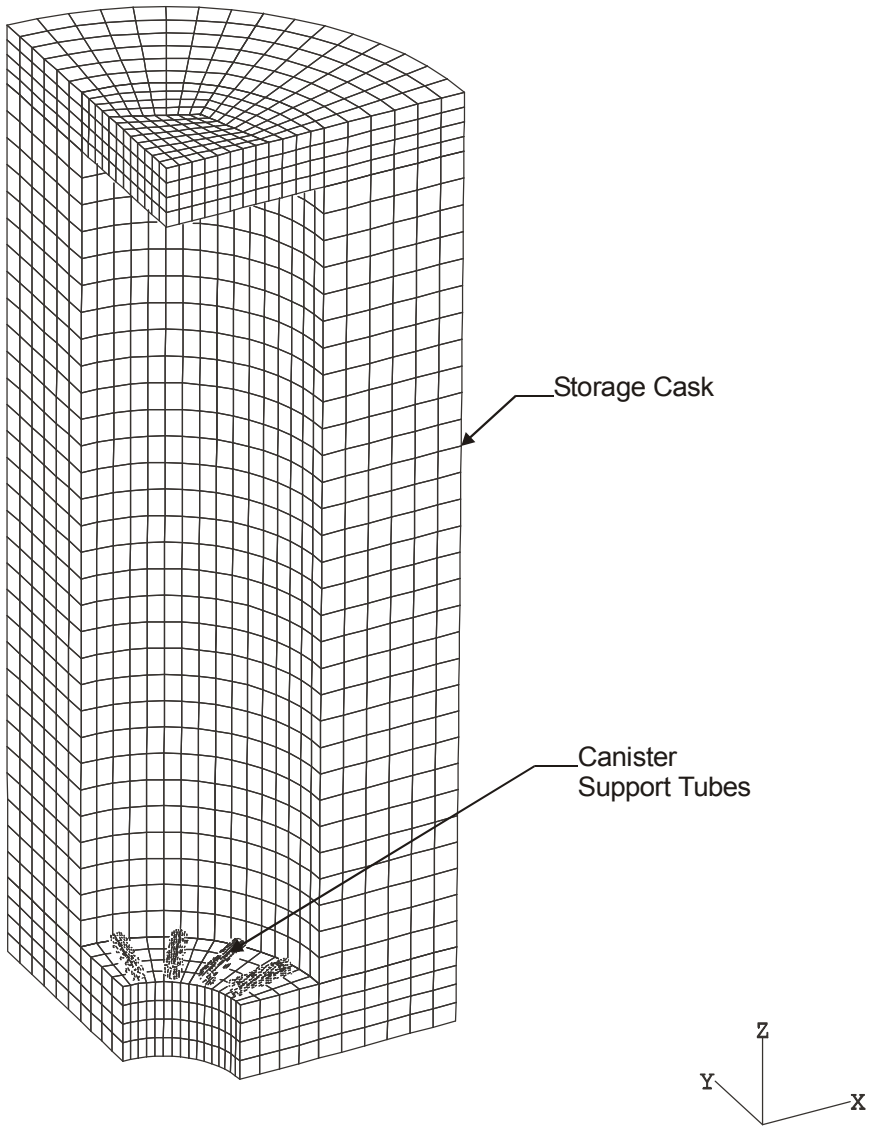

Figure 3.7-2 - Storage Cask LS-DYNA Model, Storage Cask Assembly Detail

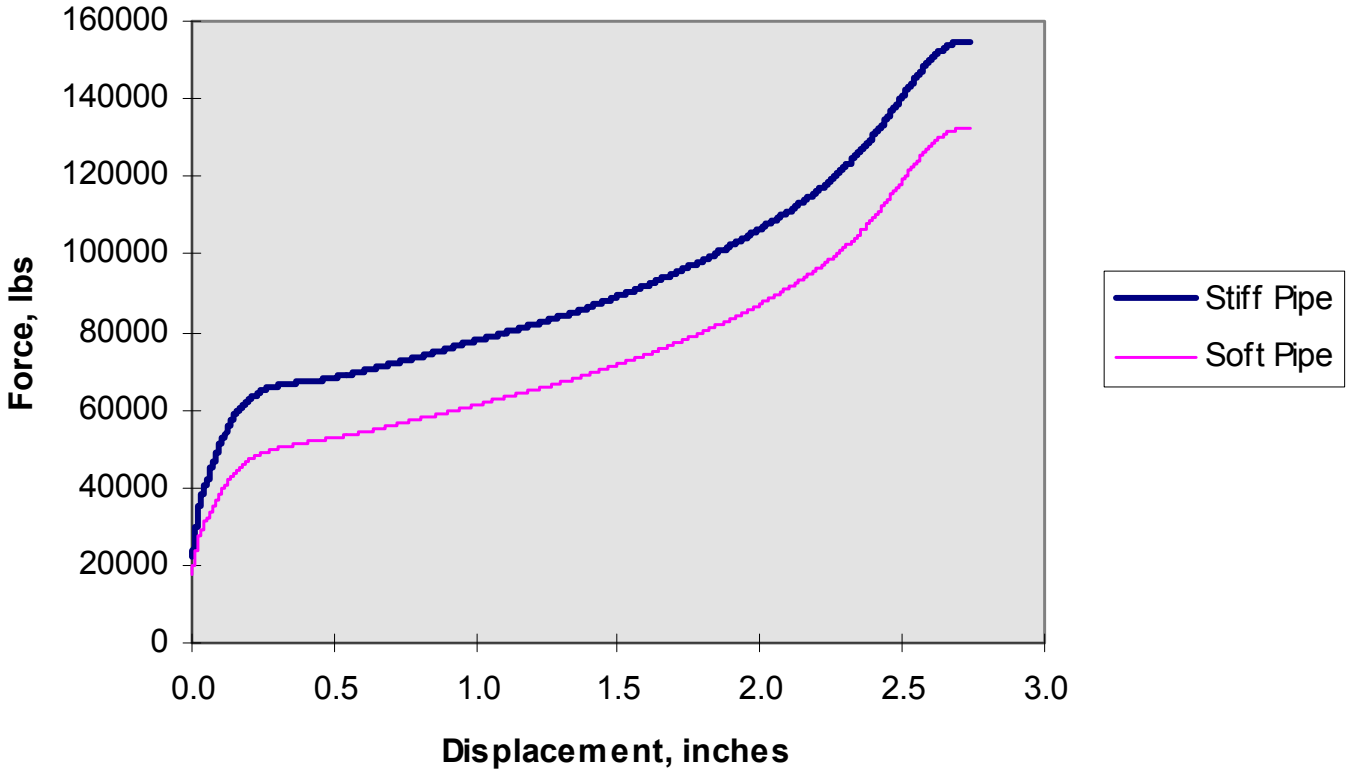

Figure 3.7-3 - Storage Cask Canister Support Pipes Upper and Lower Bound Force-Deflection Curves

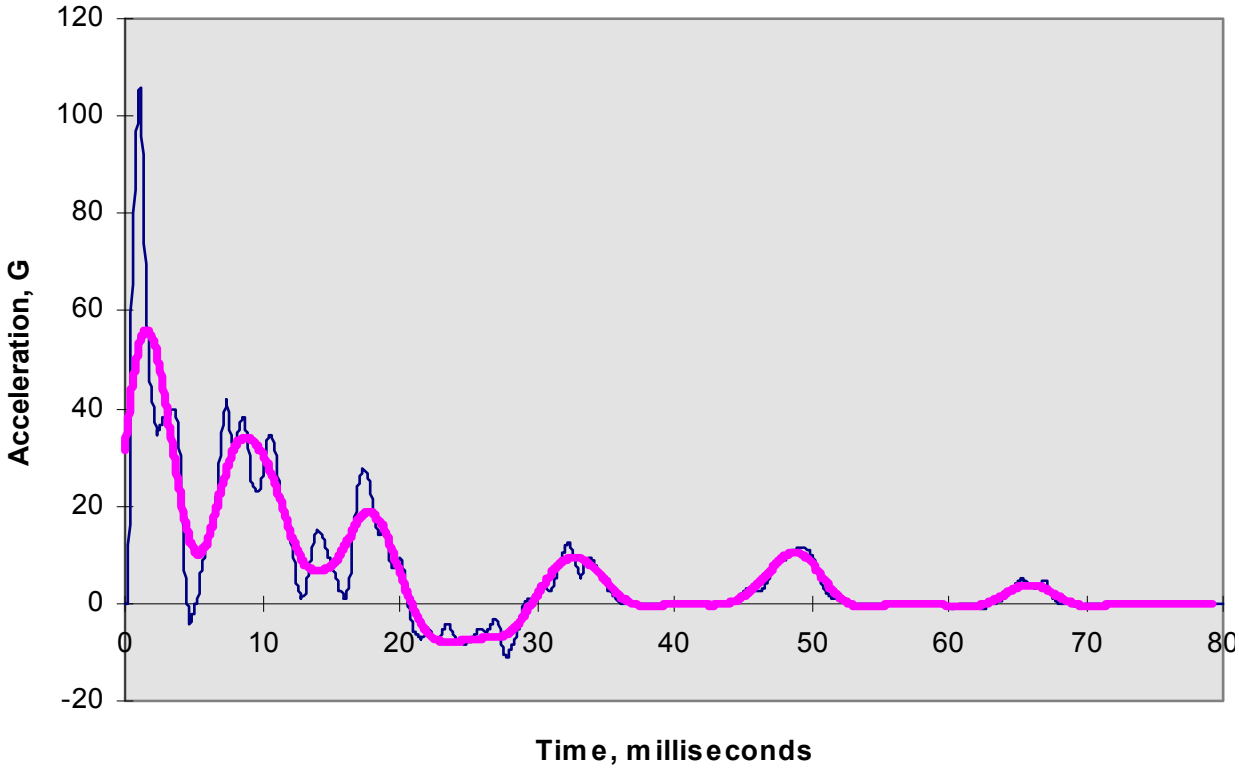

Figure 3.7-4 - Storage Cask End Drop Filtered and Unfiltered Acceleration Time-Histories (3'-0" Thick Pad with 10 ksi Soil Modulus)

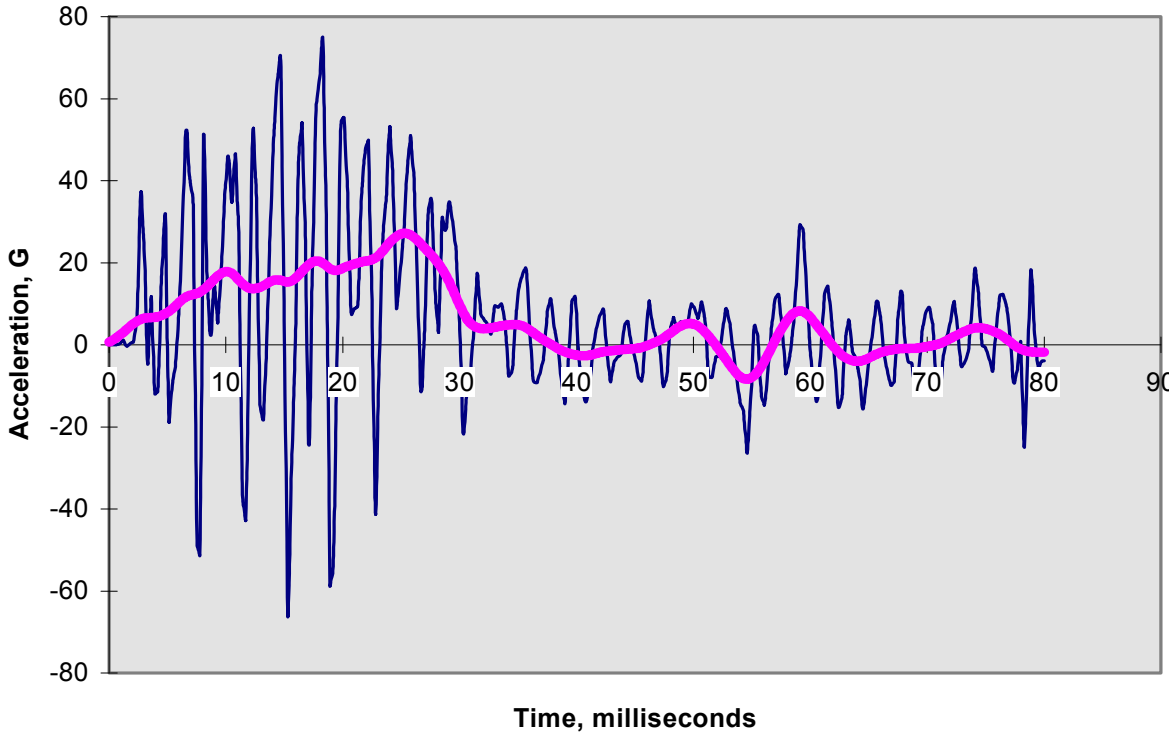

Figure 3.7-5 - Canister Shell End Drop Filtered and Unfiltered Acceleration Time-Histories (3'-0" Thick Pad with 10 ksi Soil Modulus)

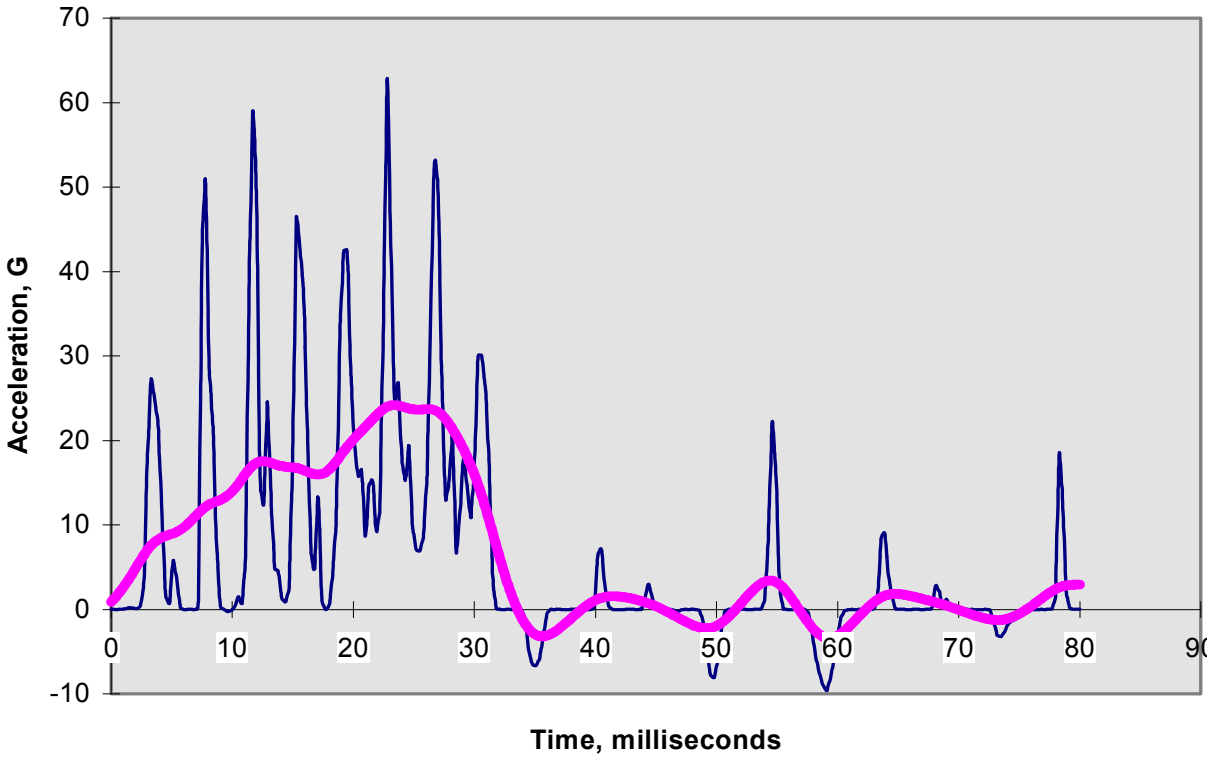

Figure 3.7-6 - Canister Basket End Drop Filtered and Unfiltered Acceleration Time-Histories (3'-0" Thick Pad with 10 ksi Soil Modulus)

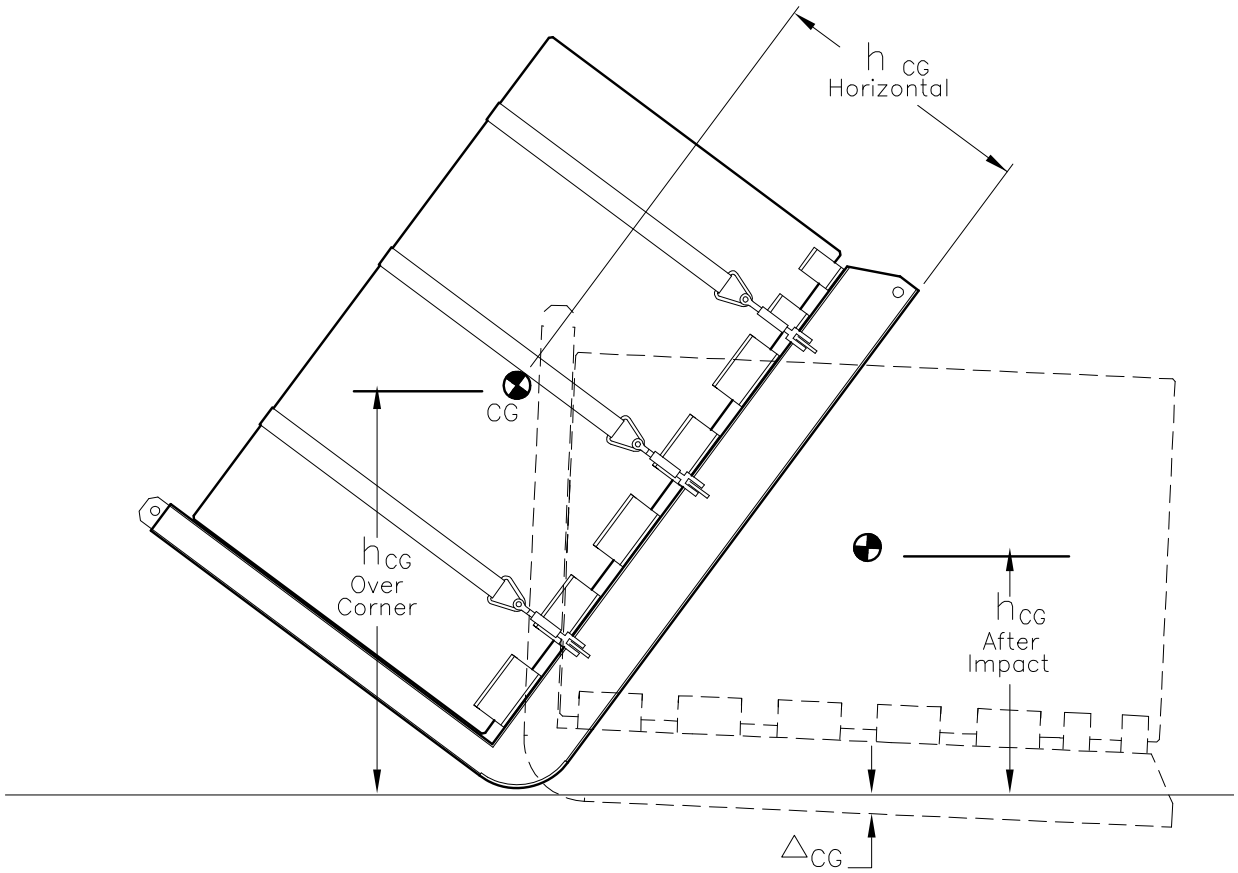

Figure 3.7-7 - Storage Cask and J-skid Tip-Over Geometry

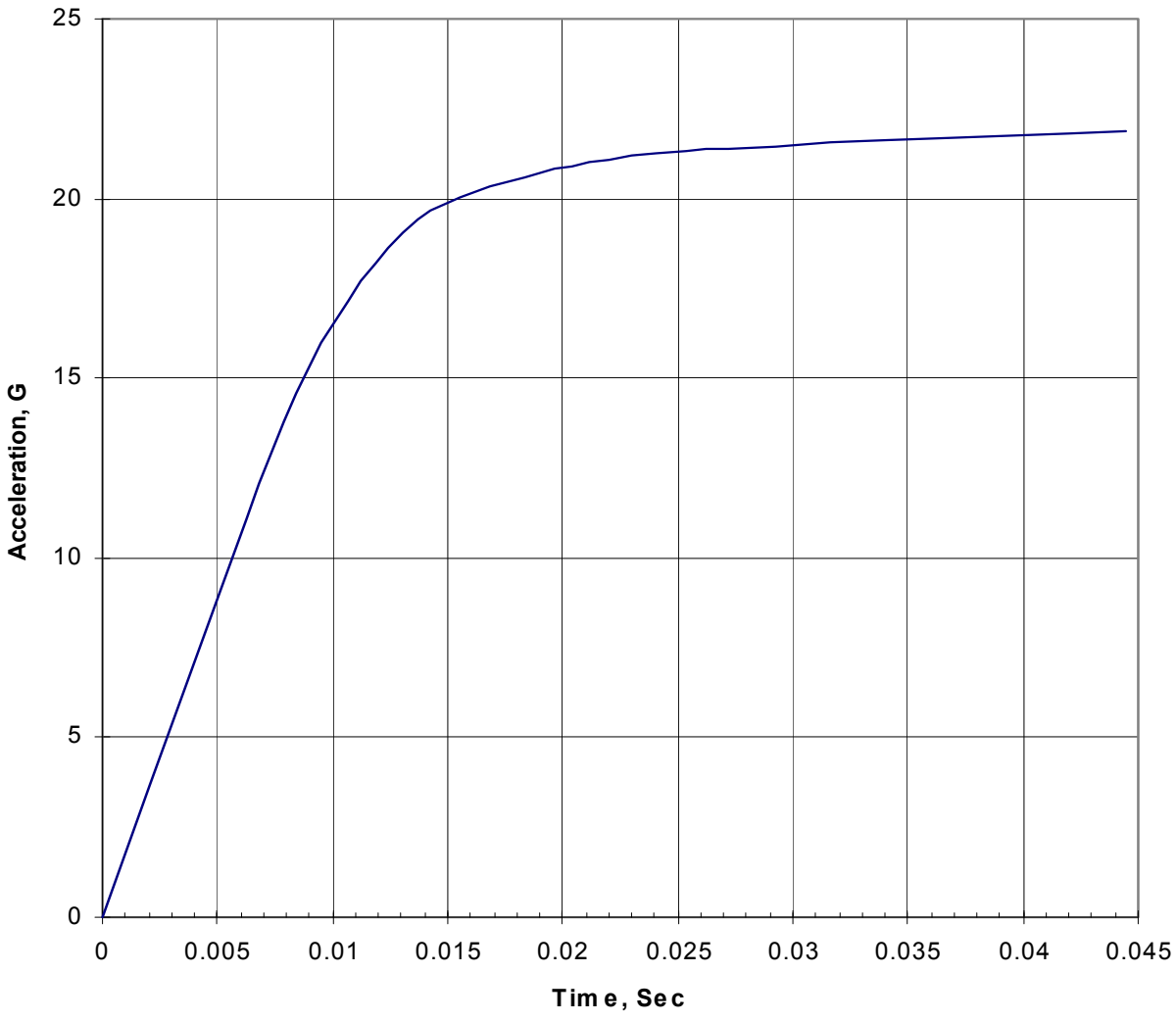

Figure 3.7-8 - Acceleration Time-History for Storage Cask and J-skid Tip-Over (Upper Bound Load)

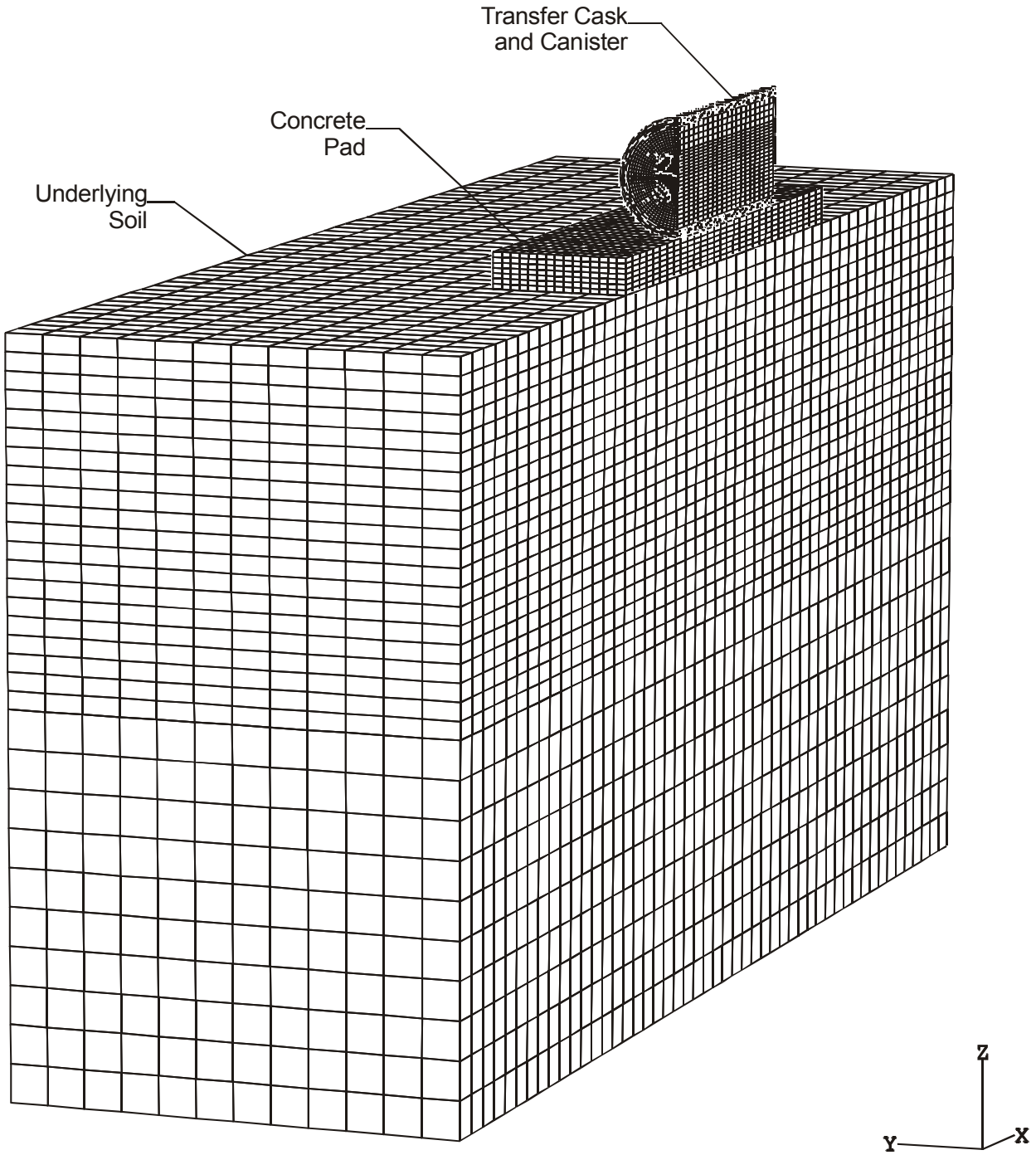

Figure 3.7-9 - Transfer Cask LS-DYNA Model for Side Drop *G*-Load Calculation

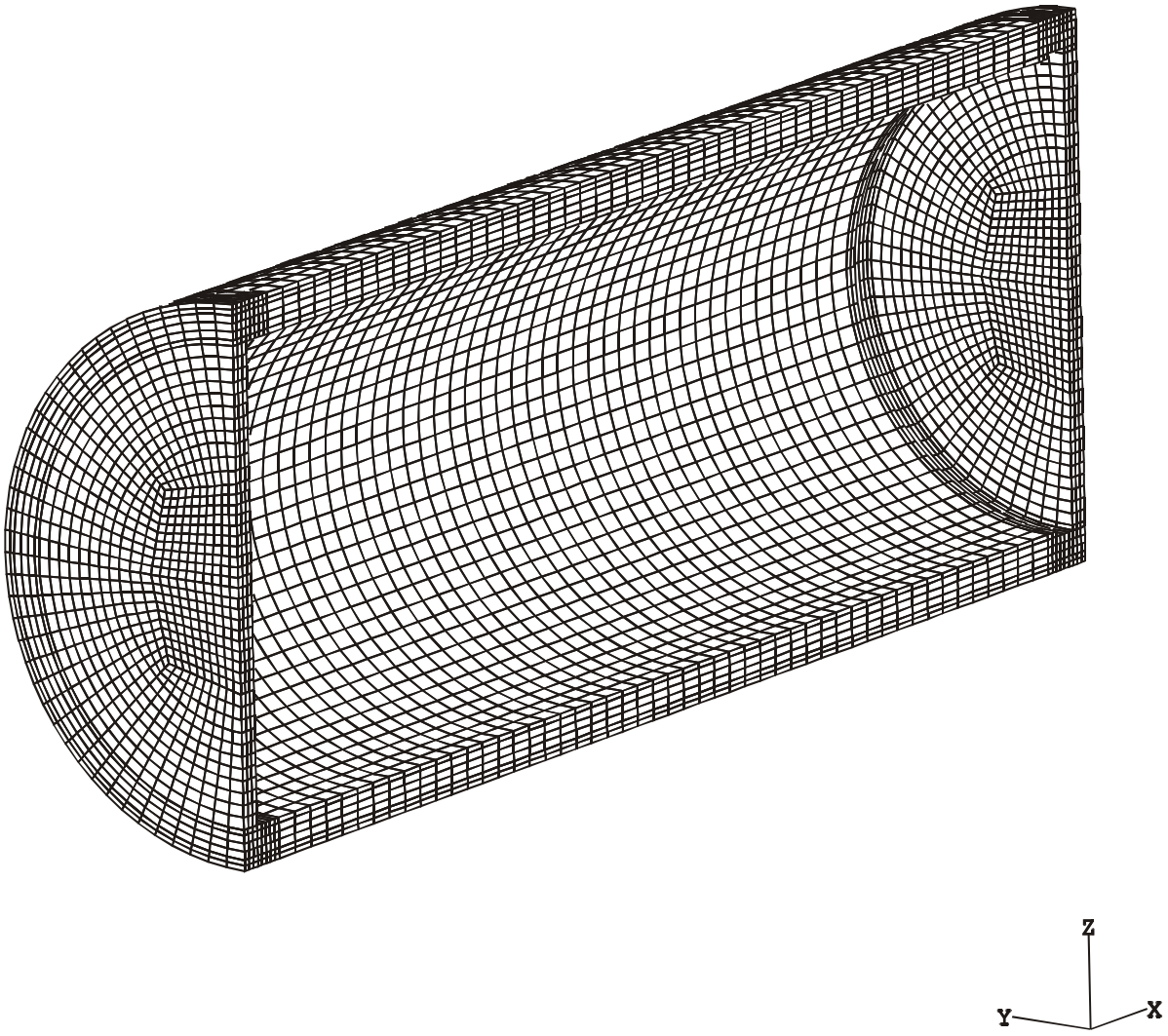

Figure 3.7-10 - Transfer Cask LS-DYNA Model for Side Drop *G*-Load Calculation, Transfer Cask Assembly Detail

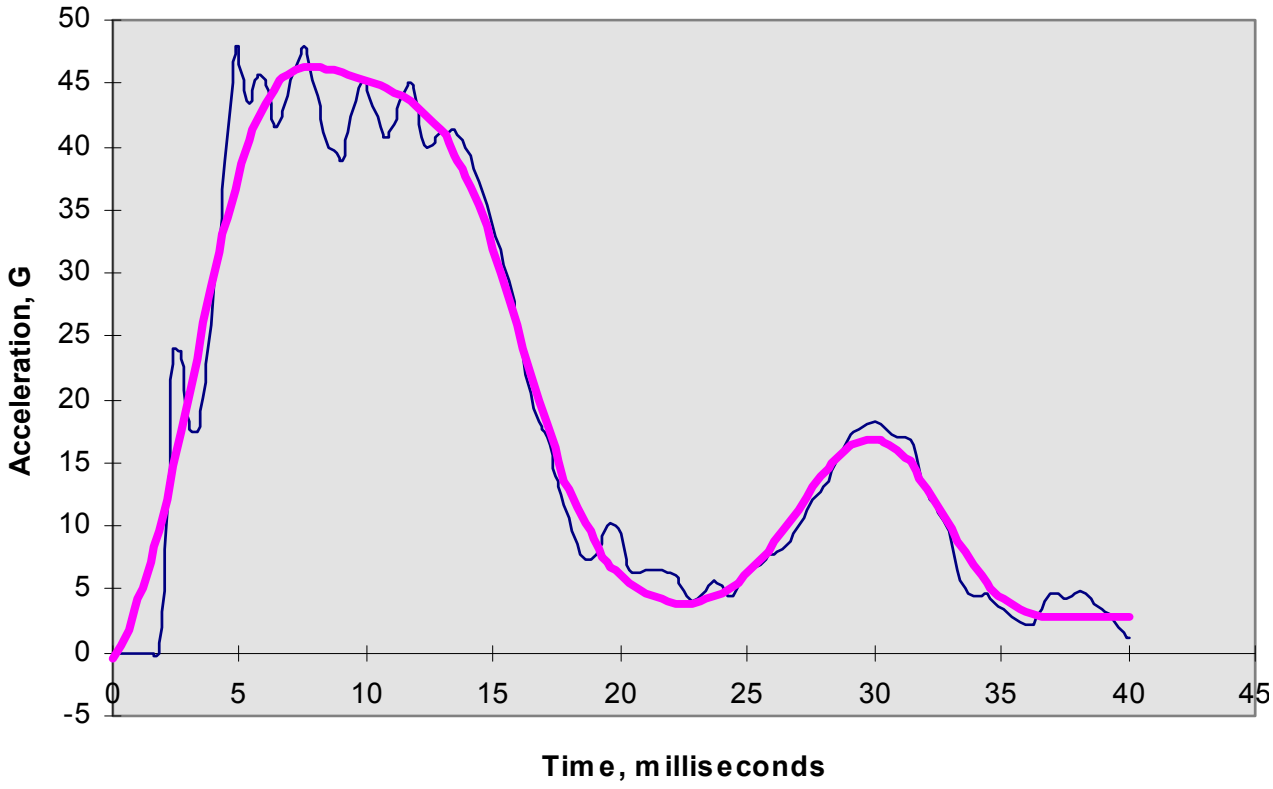

Figure 3.7-11 - Transfer Cask Side Drop Filtered and Unfiltered Acceleration Time-Histories (2'-6" Thick Pad with 15 ksi Soil Modulus)

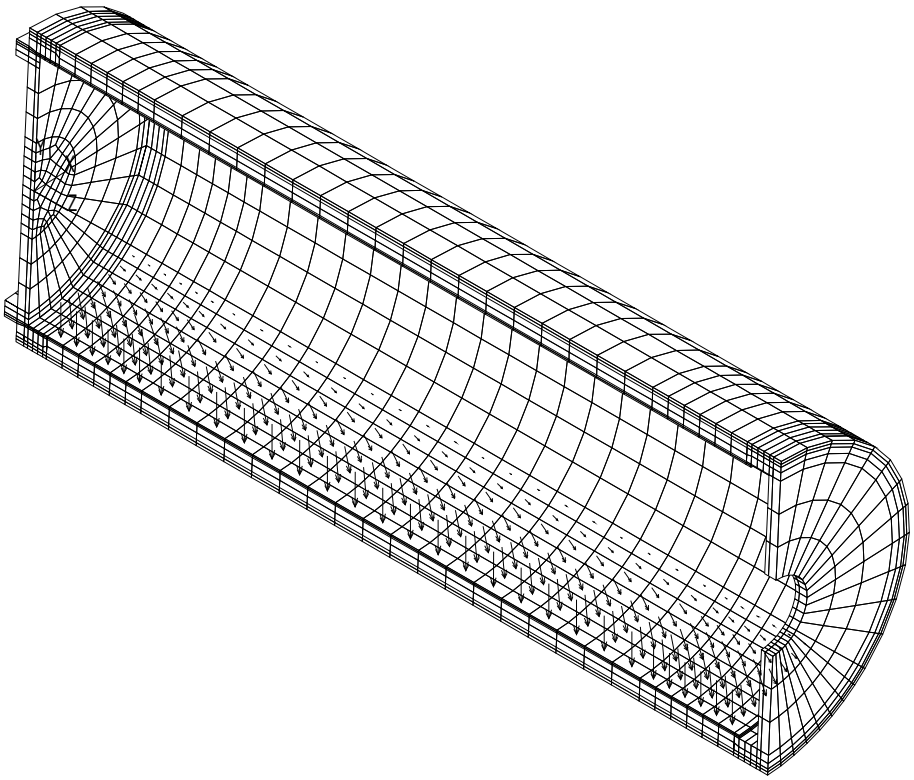

Figure 3.7-12 - Finite Element Model for Transfer Cask Side Drop Stress Analysis

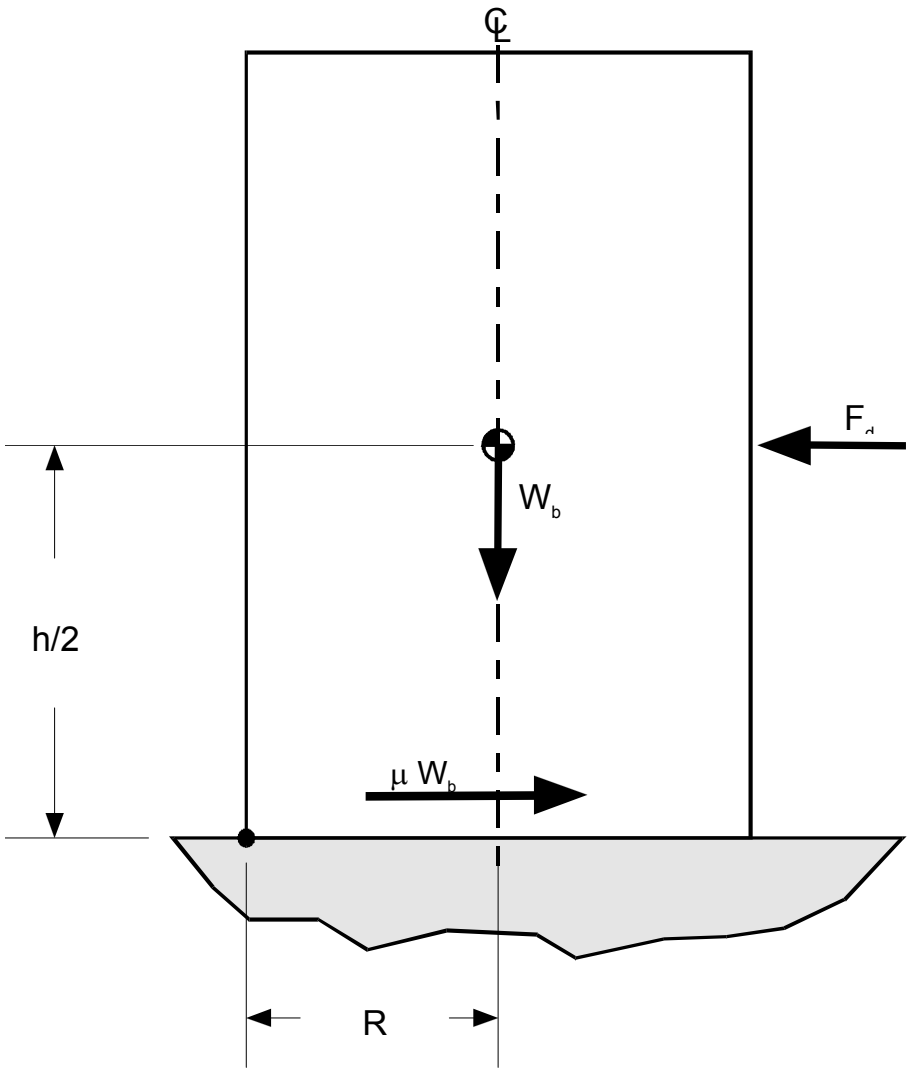

Figure 3.7-13 - Storage Cask Flood Loads

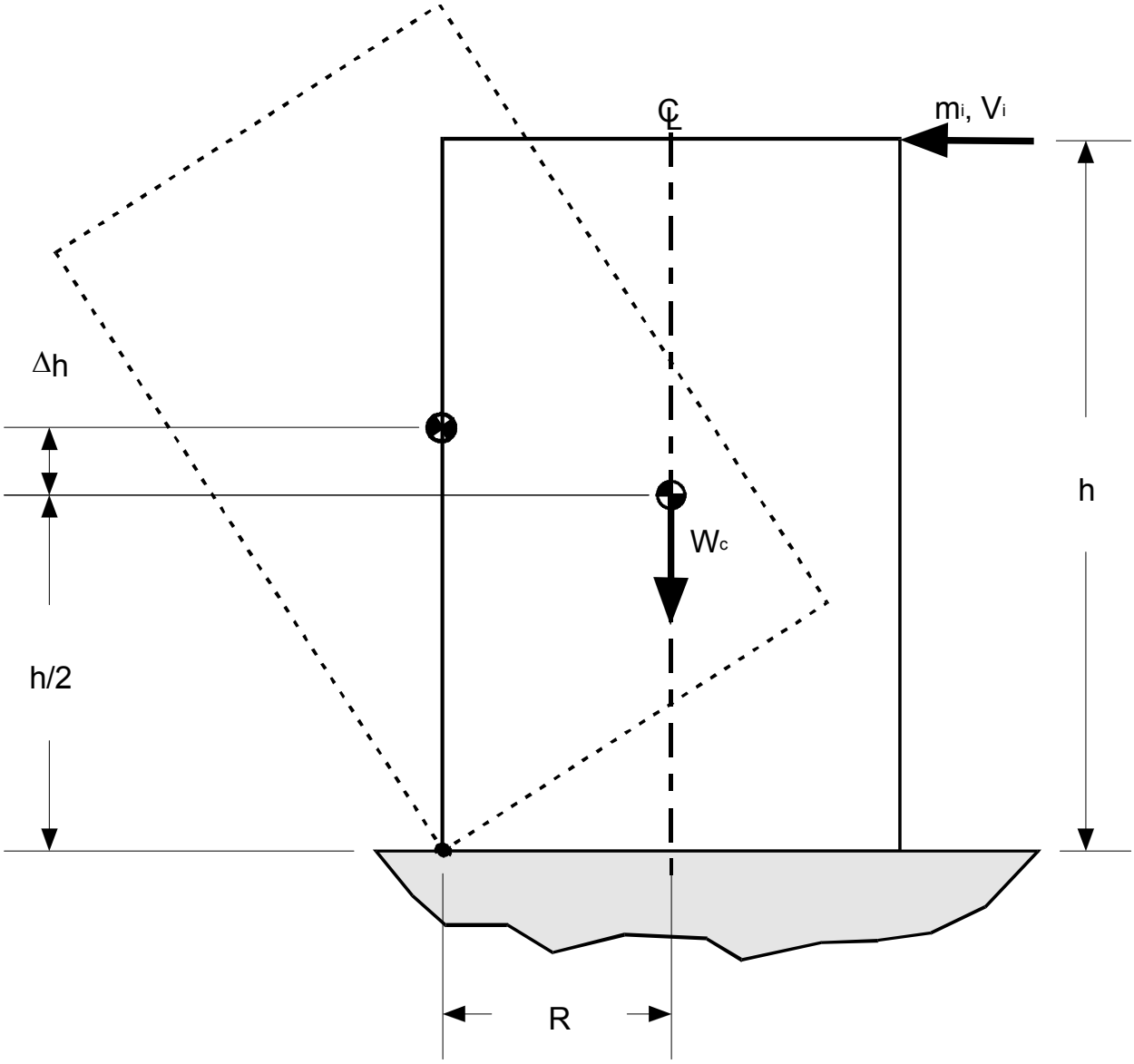

Figure 3.7-14 - Storage Cask Overturning Due to Tornado Missile Loads

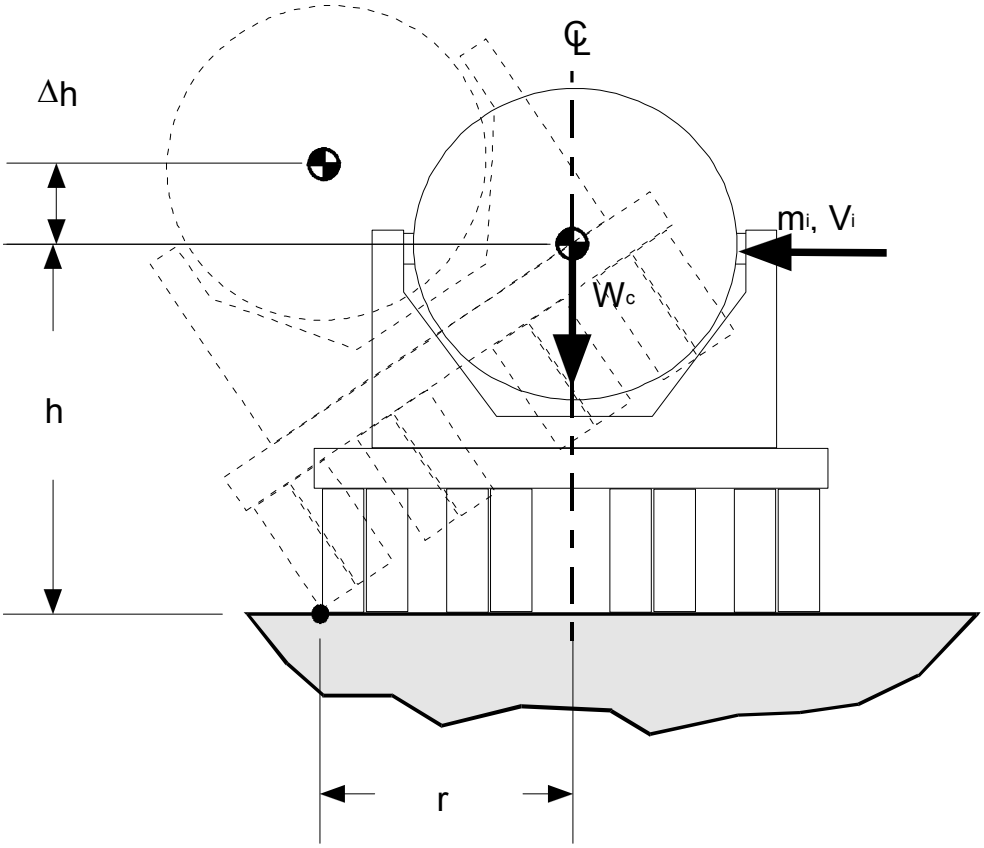

Figure 3.7-15 - Transfer Cask Overturning Due to Tornado Missile Loads

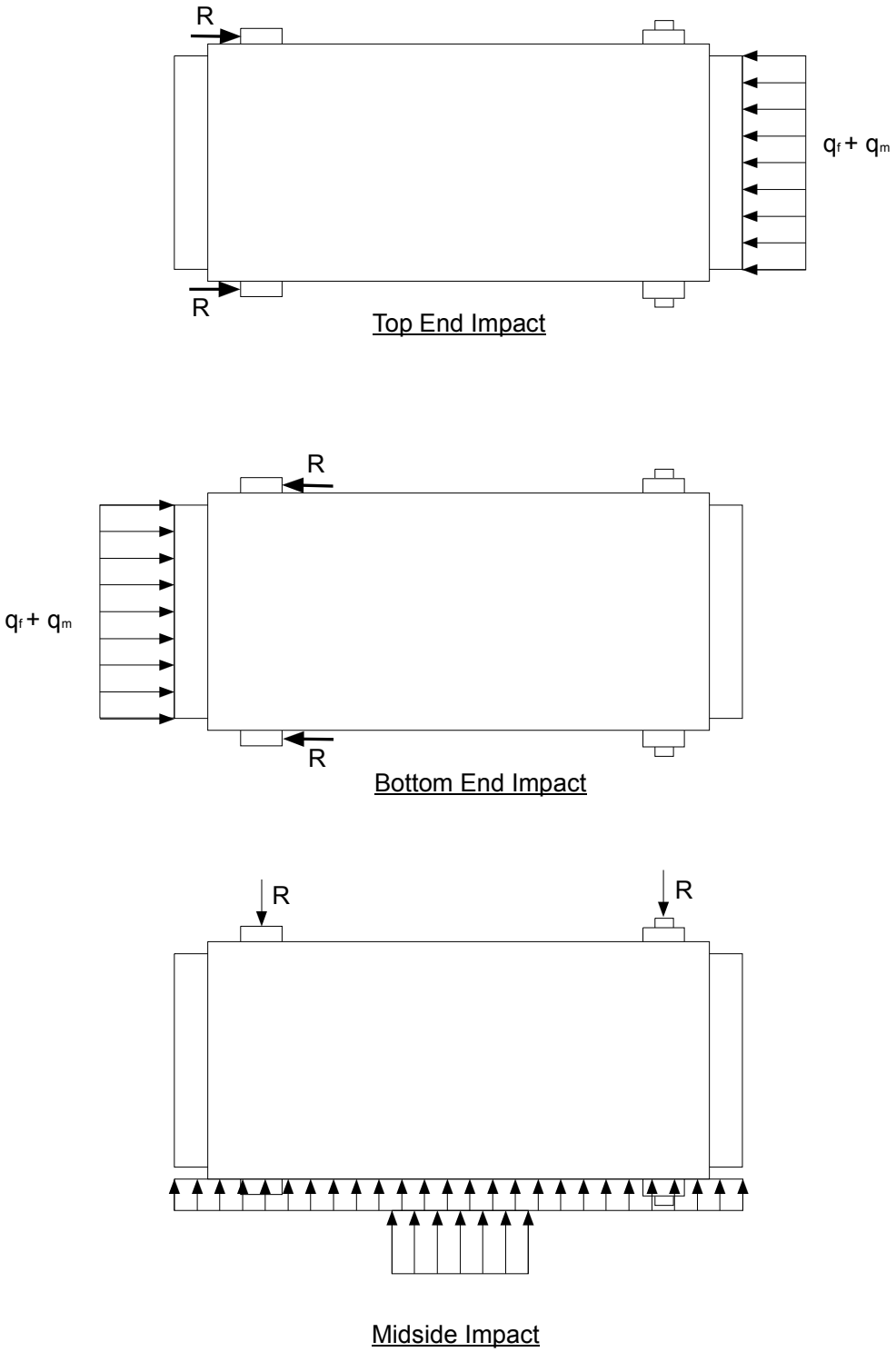

Figure 3.7-16 - Transfer Cask Tornado Loads and Reactions

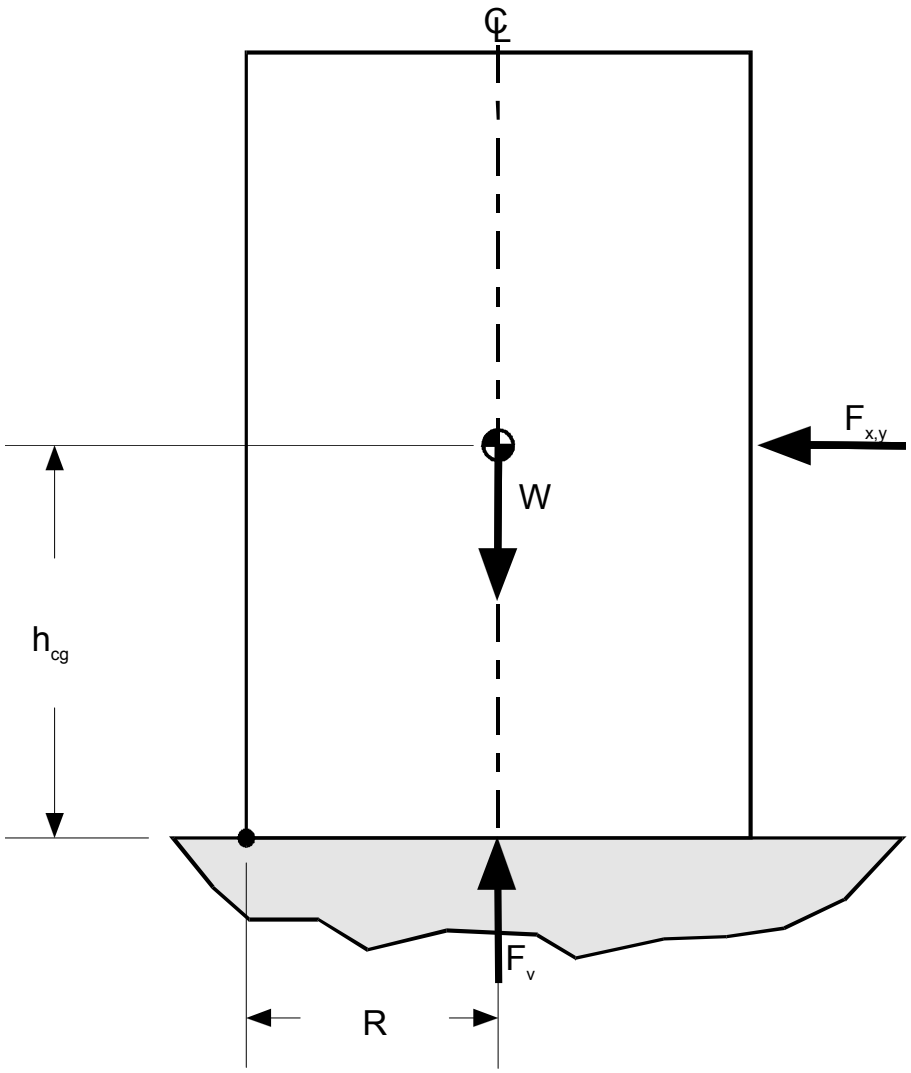

Figure 3.7-17 - Storage Cask Overturning Due to Seismic Loads

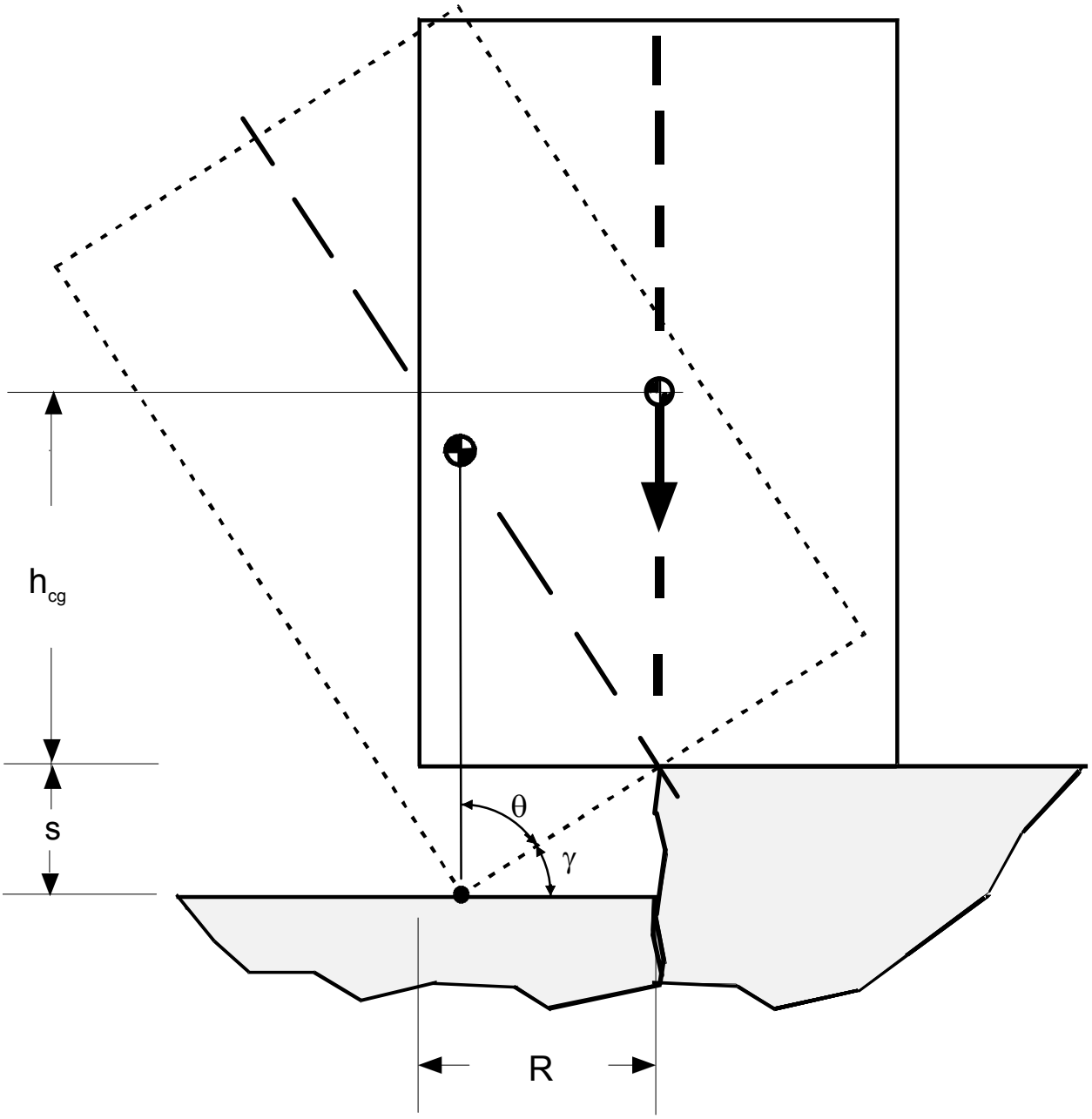

Figure 3.7-18 - Storage Cask Overturning Due to Pad Failure

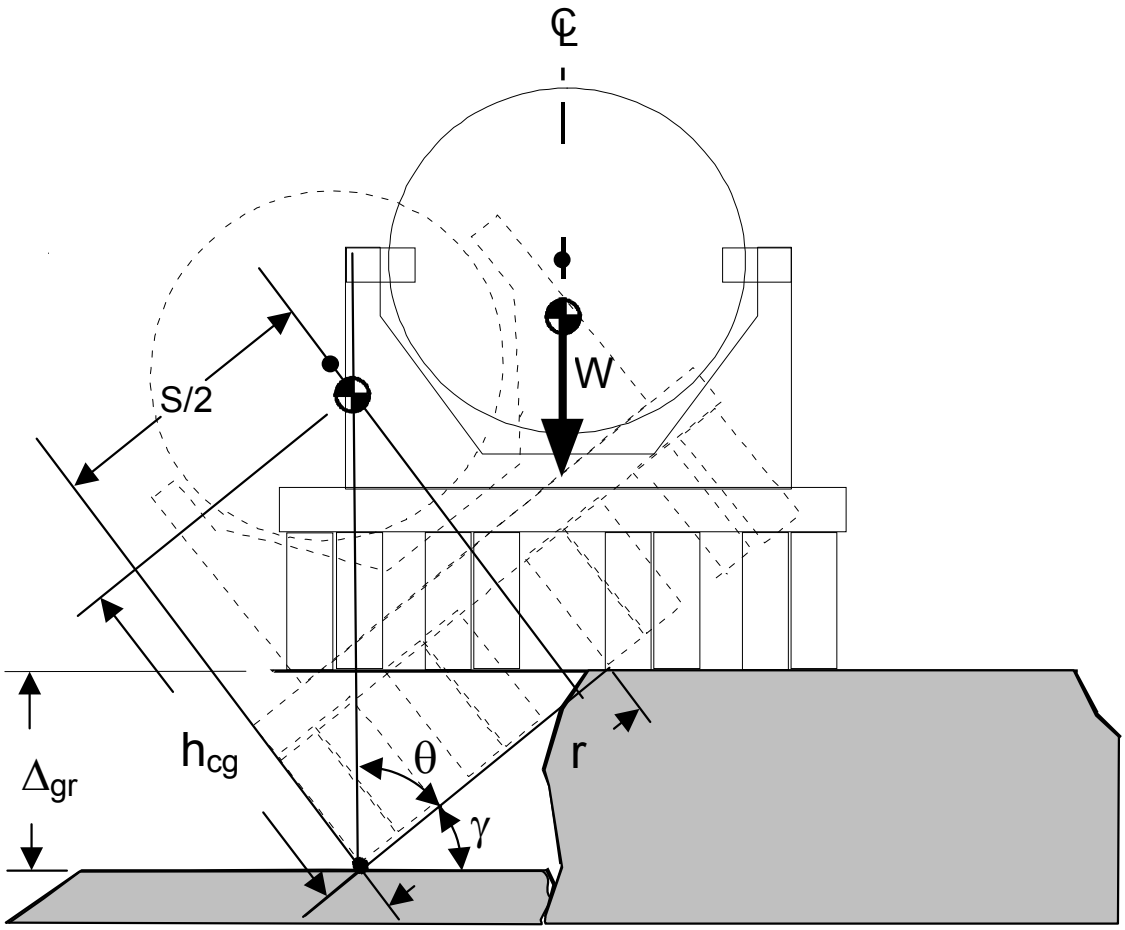

Figure 3.7-19 - Transfer Cask Overturning Due to Pad Failure

This page intentionally left blank.

3.8 Supplemental Data

3.8.1 End and Side Drop Analysis Methodology Validation

This section provides the validation of the storage cask end drop and the transfer cask side drop loads development methodology used for the FuelSolutions™ Storage System components. In accordance with the guidelines presented in NUREG/CR-6608,[36] this validation is performed by benchmarking this methodology against the Lawrence Livermore solid steel billet drop test data (hereinafter referred to as the LLNL data).

The LLNL study included vertical and horizontal drops of the billet from a variety of heights as well as a billet tip-over event. The billet was a 6,500-pound steel cylinder 72 inches in length and 20.25 inches in diameter. The target consisted of a 12-inch thick concrete pad with #3 reinforcing bars spaced at 12 inches. The pad rested on a soil with the estimated modulus of elasticity of 6,000 psi. The recorded acceleration time-history for the billet was filtered at 450 Hz in order to obtain the rigid body response. All of these parameters were introduced into the cask finite element model and the results compared to the LLNL test data.

3.8.1.1 Assumptions and Methodology

The LS-DYNA[37] finite element computer program is used to analyze the billet rigid body time-history impact loads resulting from end drop, side drop, and tip-over conditions. The steel billet end drop evaluation is performed using the ¼-symmetry finite element model shown in Figure 3.8-1. This model includes 10,716 nodes and 8,795 elements. The steel billet side drop and tip-over evaluations are performed using the ½-symmetry finite element model shown in Figure 3.8-2, which includes 20,700 nodes and 17,590 elements. The geometry and mesh density used in both models are similar to those of the LLNL steel billet finite element models described in NUREG/CR-6608.

The steel billet, concrete pad, and underlying soil are represented in each model. The non-linear interface between the soil and concrete pad, and between the steel billet and concrete pad, are modeled using contact surfaces which transfer compressive forces but allow uplift. For consistency with the LLNL steel billet finite element models in NUREG/CR-6608, a value of 0.25 was used for the coefficient of friction for all contact surfaces. Descriptions of the finite element model representations of the steel billet, concrete pad, and underlying soil are provided in the following sections.

3.8.1.1.1 Steel Billet

The 72-inch long by 20.25-inch diameter steel billet is modeled using solid brick elements. The steel billet is modeled using perfectly elastic material properties in both models. The steel billet

[36] Witte, et. al., *Summary and Evaluation of Low-Velocity Impact Tests of Solid Steel Billet Onto Concrete Pads*, NUREG/CR-6608, UCRL-ID-129211, February 1998.

[37] Livermore Software Technology Corporation, *LS-DYNA User's Manual (Nonlinear Dynamic Analysis of Structures in Three Dimensions)*, Version 940,Livermore, CA, June 1997.

material properties are taken from Section 5.2.1 of NUREG/CR-6608 and are summarized in Table 3.8-1.

3.8.1.1.2 Concrete Pad

The 10' x 10' x 1' thick concrete pad used in the LLNL tests is modeled using solid brick elements in the manner consistent with NUREG-6608. For the ½-symmetry model, the symmetry plane is modeled across the diagonal (i.e., through two opposing corners), as shown in Figure 3.8-1. The concrete pad mesh includes four elements through the thickness and has a refined mesh in the impact region. The ¼-symmetry model representation of the concrete pad is similar to that of the ½-symmety model, but includes only half the number of elements. Properties of the concrete used for both models are summarized in Table 3.8-1 and the concrete representation is based on LS-DYNA Material Model 16. This material model is identical to the DYNA3D Material Model 16 described in Appendix C of NUREG/CR-6608.

3.8.1.1.3 Underlying Soil

The soil is modeled using solid brick elements. Following the modeling of NUREG-6608, the soil volume included in the ¼-symmetry finite element model used for the steel billet end drop evaluation is 180" x 180" x 227" deep. For the ½-symmetry model, the soil volume is modeled as 180" x 360" x 227" deep. The soil is modeled as a perfectly elastic material with properties taken from Section 5.2.2 of NUREG/CR-6608 and summarized in Table 3.8-1. Non-reflecting boundary conditions are applied to the exterior embedded faces of the soil elements to eliminate reflection of stress waves within the soil.

3.8.1.1.4 Impact Velocities

Several drop conditions are evaluated to benchmark the models against the drop test results. For each drop analysis, the steel billet is modeled at the point of contact with the concrete pad and the initial conditions are specified. The drops of interest are the 18-inch end drop, the 18-, 36-, and 72-inch side drops, and the tip-over drop. The impact velocity for the end and side drop orientations is calculated as follows:

$$V_0 = \sqrt{2gh}$$

where:

g	=	386 in/sec^2, Gravitational constant
h	=	Drop height in inches.

The resulting initial velocities for drop heights of 18, 36, and 72 inches are 118 in/sec, 167 in/sec, and 236 in/sec, respectively.

For the billet tip-over condition, the initial angular velocity is determined assuming the billet starts from a resting position with the center of gravity over the corner. The resulting initial angular velocity (ω_0) of the billet upon impact with the pad is calculated as follows:

$$\omega_0 = \sqrt{\frac{2T}{I_o}} = 3.37 \text{ radians/second}$$

where:

T	=	mgΔh, Kinetic energy of the billet at impact
	=	$W_b(d - r_b)$
	=	176,606 in-lbs
W_b	=	6,475 lbs, Weight of steel billet
d	=	distance from point of rotation to billet center of gravity
	=	$\sqrt{r_b^2 + \left(\frac{l}{2}\right)^2}$
	=	$\sqrt{(10.125)^2 + (36.0)^2}$
	=	37.4 in
r_b	=	10.125 in, Steel billet radius.
l	=	72 in, Steel billet length.
I_o	=	31,108 in-lbs-s^2, Mass moment of inertia about bottom corner of billet

3.8.1.2 Evaluation of Finite Element Results

Using the analytical models described above, the time-history impact analyses are performed and the resulting accelerations calculated. In order to determine the rigid-body response of the steel billet for each drop condition, the "raw" acceleration time-histories from the finite element analyses are filtered to remove the effects of any vibratory response or stress waves within the steel billet. The acceleration time-history results from the steel billet finite element analyses are post-processed using both low-pass Butterworth and SAE filters.

The Butterworth filter is used for the billet analysis since this filter was selected in NUREG/CR-6608. The SAE filter is also used to post-process the raw time-history data since this filter is selected for the storage cask end drop and transfer cask side drop evaluations presented in Sections 3.7.3 and 3.7.5, respectively. A 450 Hz cutoff frequency (selected in accordance with Section 4.1 of NUREG/CR-6608) is used for both filters. This cutoff frequency corresponds to roughly 80% of the steel billet free-free natural vibration frequency.

The accelerations are evaluated at different nodes on the steel billet model depending on the drop orientation. The nodes selected are taken as those closest to the corresponding locations of the accelerometers on the steel test billet.

The peak rigid-body accelerations determined using both filtering techniques discussed above are compared in Table 3.8-2. The comparison shows that while both filters provide similar results, the SAE filter used for the cask analysis consistently produces slightly higher peak rigid-body accelerations. Fourier spectral density plots for the 18-inch end drop and 72-inch side drop are presented in Figure 3.8-3 and Figure 3.8-4, respectively. These figures show that the spectral content of the filtered response below the cutoff frequency is essentially the same as that

of the unfiltered response. This demonstrates that the selected filtering criteria adequately capture the steel billet rigid-body response.

3.8.1.3 Summary of Finite Element Results

The steel billet peak rigid-body accelerations are summarized in Table 3.8-2 for each of the drop conditions evaluated along with the corresponding peak rigid-body accelerations from the drop tests. The test values presented in Table 3.8-2 are the averages of the test data for each individual test condition, as presented in Tables 15, 16, and 17 of NUREG/CR-6608. As shown in Table 3.8-2, the peak rigid-body accelerations determined using the finite element analysis are in good agreement with the test results.

In addition, the general shapes and pulse durations of the acceleration time-history curves agree well with the test results presented in Appendix B of NUREG/CR-6608. The curves from the steel billet finite element analysis for the 18-inch end drop, the 18-, 36-, and 72-inch side drops, and the tip-over drop are shown in Figure 3.8-5 through Figure 3.8-9.

Based on the results of this benchmarking evaluation, it is concluded that the LS-DYNA finite element code and the modeling assumptions employed in the analysis accurately predict the rigid-body responses of the low-velocity impacts for the steel billet drop tests which simulated cask drop conditions. Therefore, the LS-DYNA computer code, the analytical methodology, and the modeling assumptions used for the steel billet drop evaluations are acceptable for use in predicting the impact loads resulting from the postulated storage cask end drop and transfer cask side drop conditions.

Table 3.8-1 - Steel Billet Finite Element Model Material Properties Used in Benchmark Analysis

Material Property	Model Component		
	Steel Billet	Concrete Pad	Soil
Young's Modulus, E (psi)	$30x10^6$	(1)	$6x10^3$
Poisson's Ratio, ν	0.29	0.22	0.45
Density, ρ (lb/ft^3)	488	140	136

Note:
(1) Material Model 16 was used for the concrete, as described in Section 3.8.1.1.2.

Table 3.8-2 - Comparison of Billet Drop Analysis and Test Results

Billet Drop Condition	Drop Height (in.)	Peak Rigid-Body Acceleration		
		FE Result		Test Data(1)
		Butterworth Filter	SAE Filter	
End Drop	18	75*g*	79*g*	85*g*
Side Drop	18	108*g*	114*g*	107*g*
	36	148*g*	156g	118*g*
	72	200*g*	212*g*	202*g*
Tip-over	C.G. Over Corner	216*g*	216*g*	224*g*

Note:
(1) Average of values given in Tables 15 through 17 of NUREG/CR-6608.

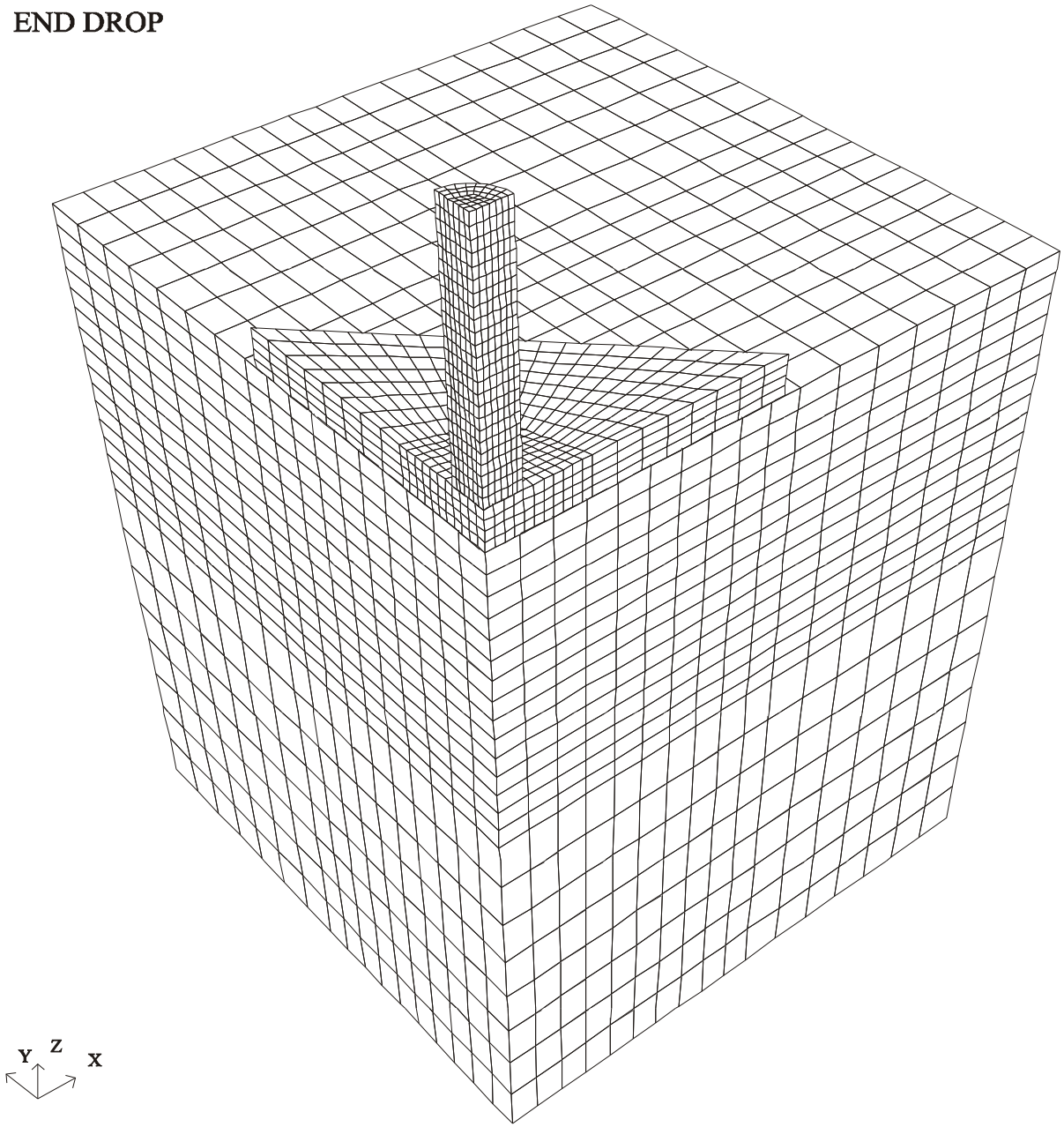

Figure 3.8-1 - Steel Billet End Drop LS-DYNA Finite Element Model (FEM)

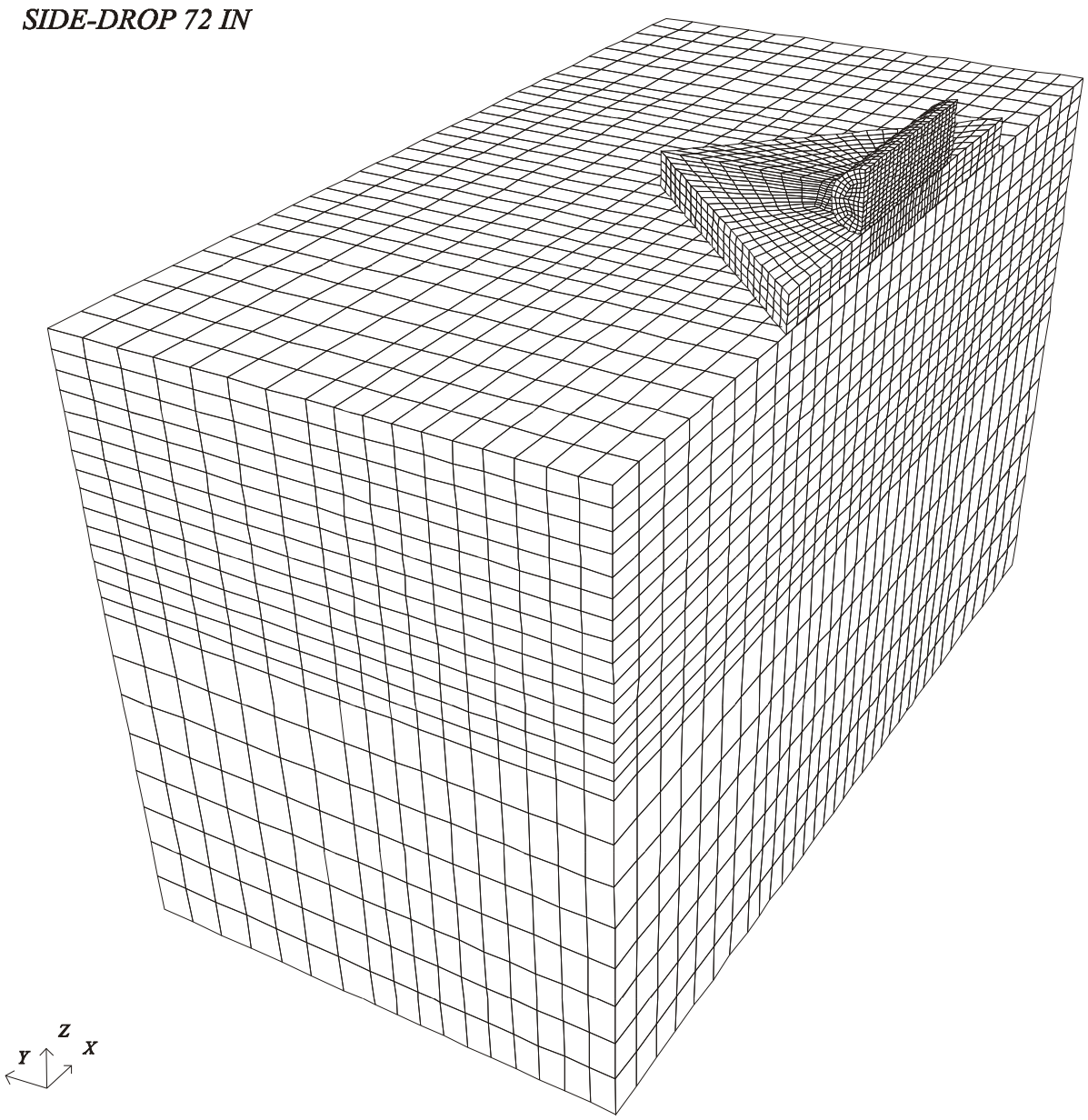

Figure 3.8-2 - Steel Billet Side Drop and Tip-Over LS-DYNA Finite Element Model (FEM)

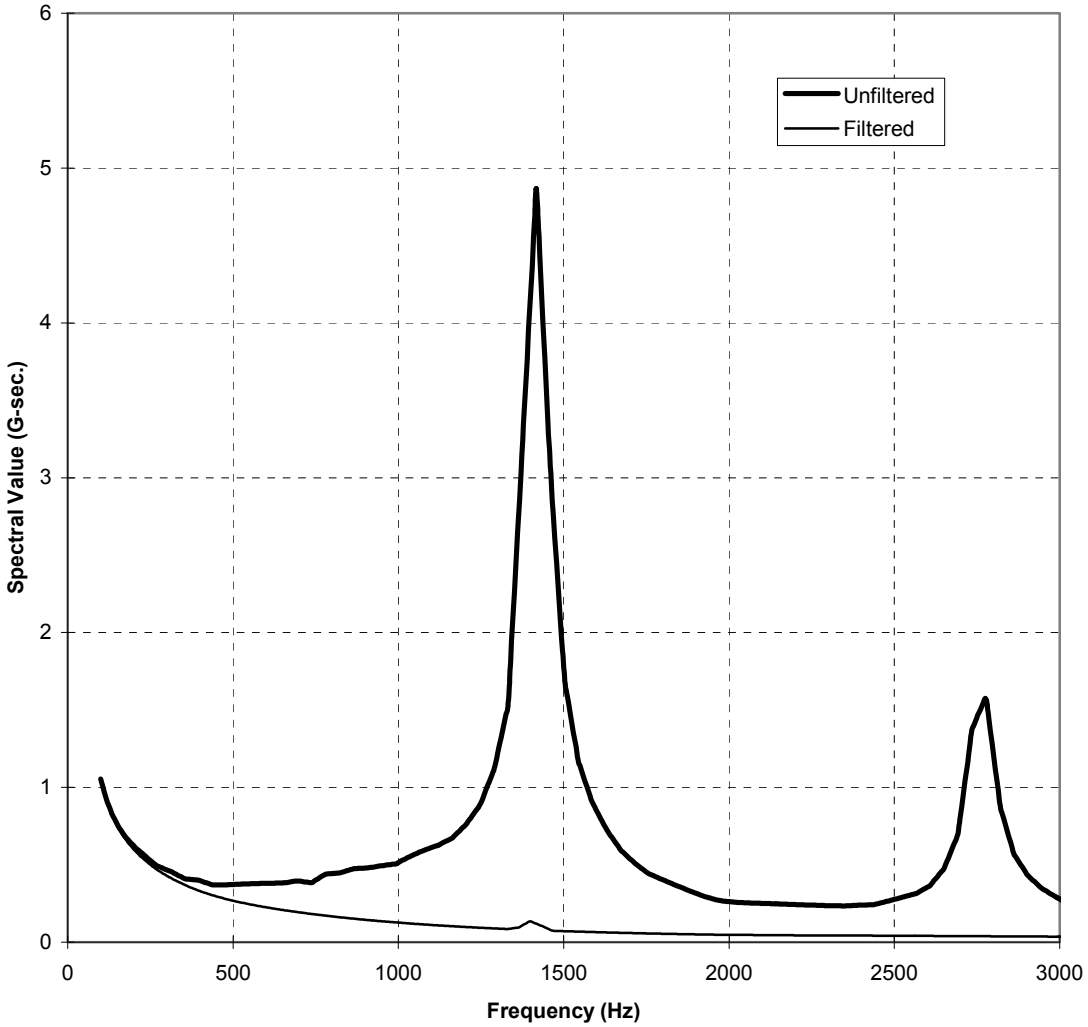

Figure 3.8-3 - Comparison of Fourier Spectrum for Billet 18" End Drop Test

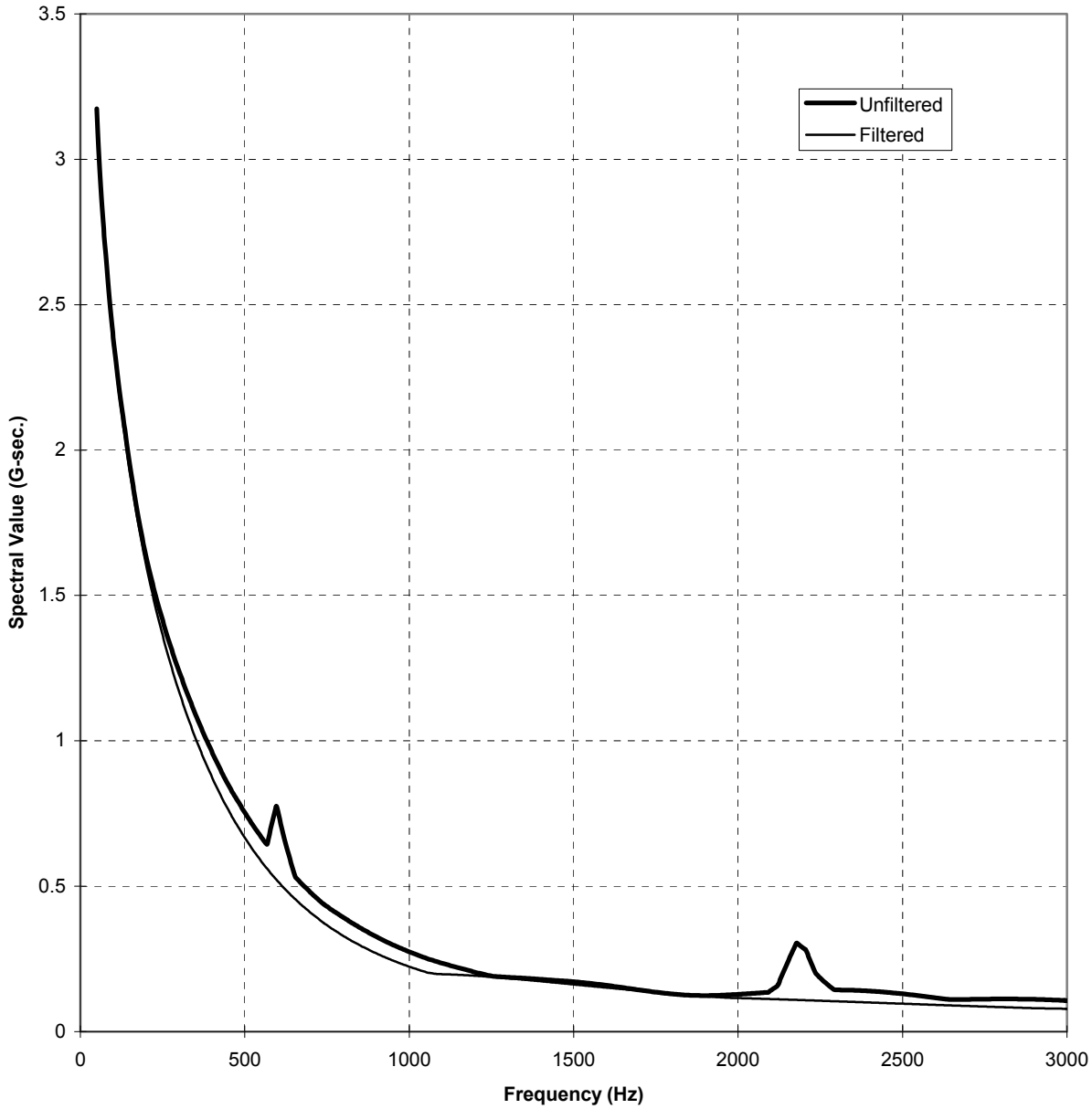

Figure 3.8-4 - Comparison of Fourier Spectrum for Billet 72" Side Drop Test

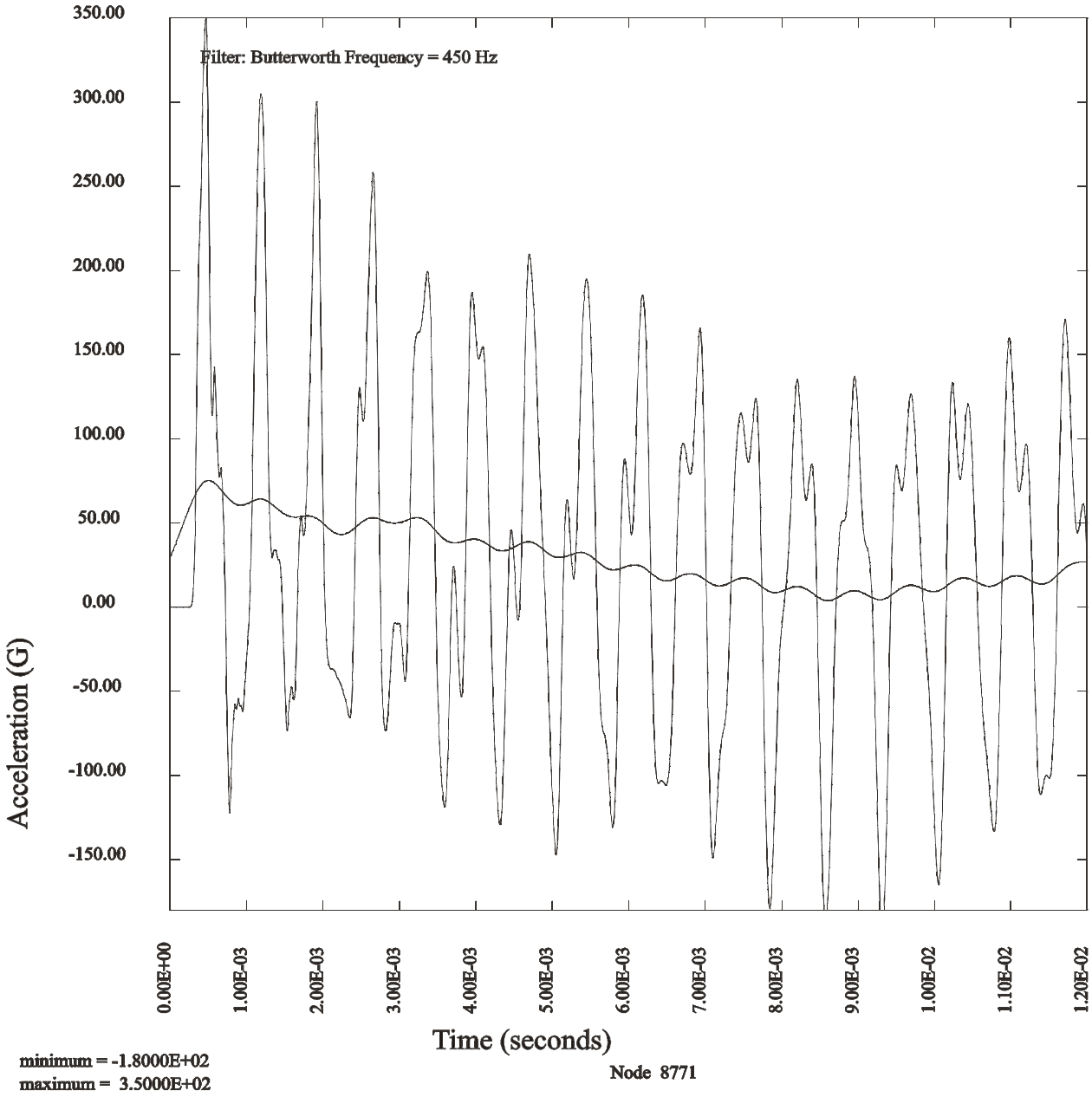

Figure 3.8-5 - Steel Billet 18" End Drop FEM Analysis Acceleration Time-History

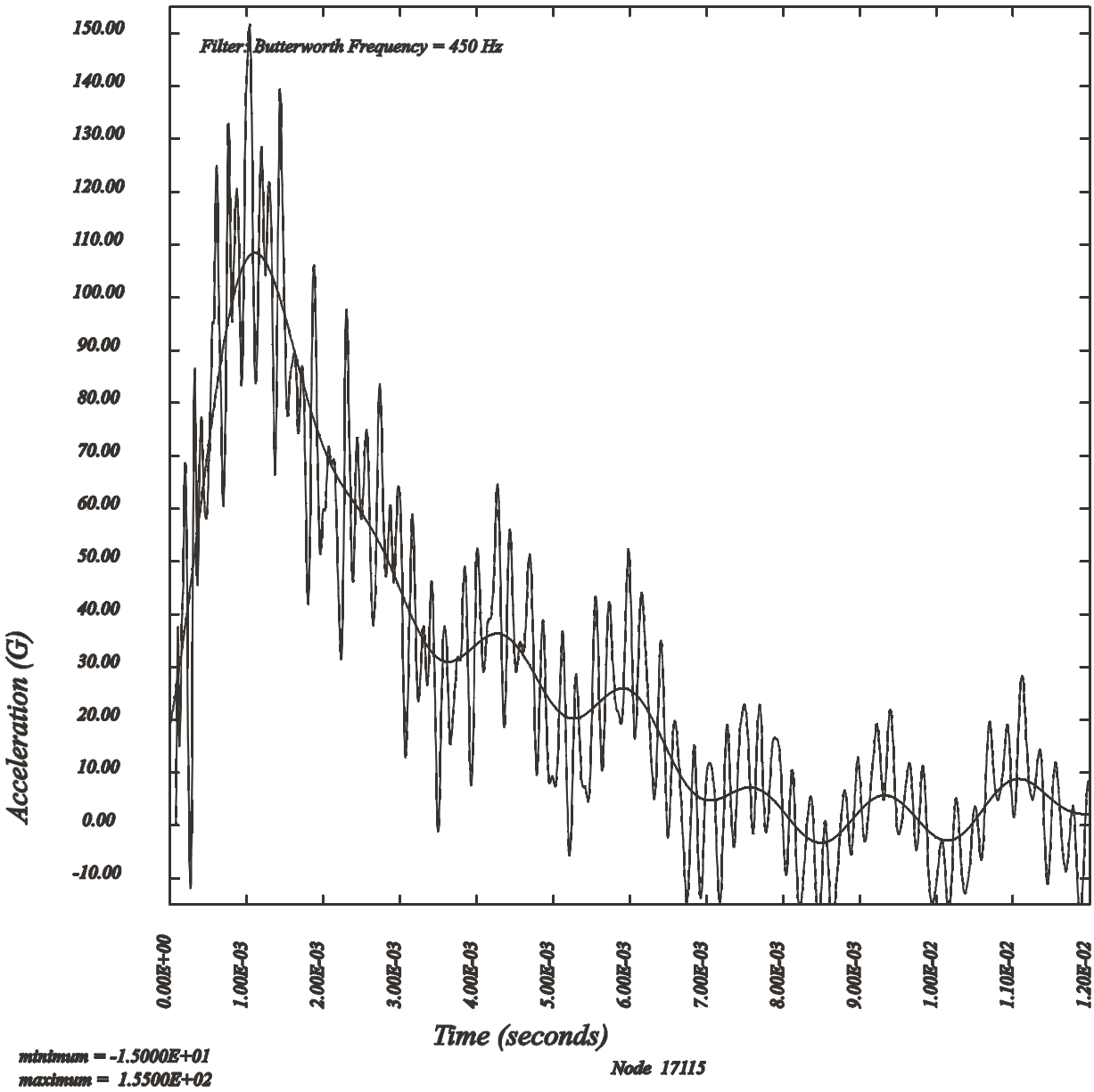

Figure 3.8-6 - Steel Billet 18" Side Drop FEM Analysis Acceleration Time-History

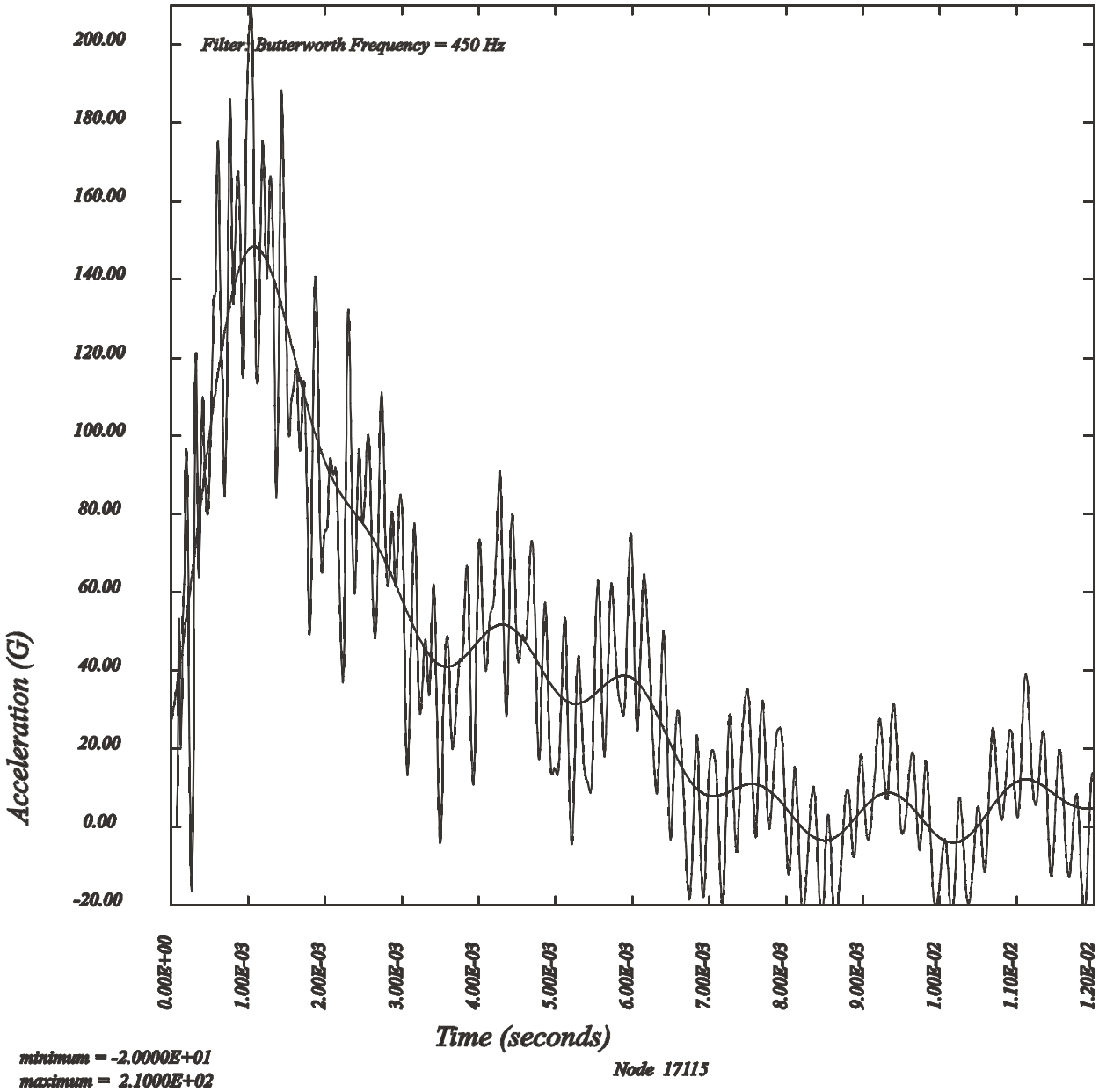

Figure 3.8-7 - Steel Billet 36" Side Drop FEM Analysis Acceleration Time-History

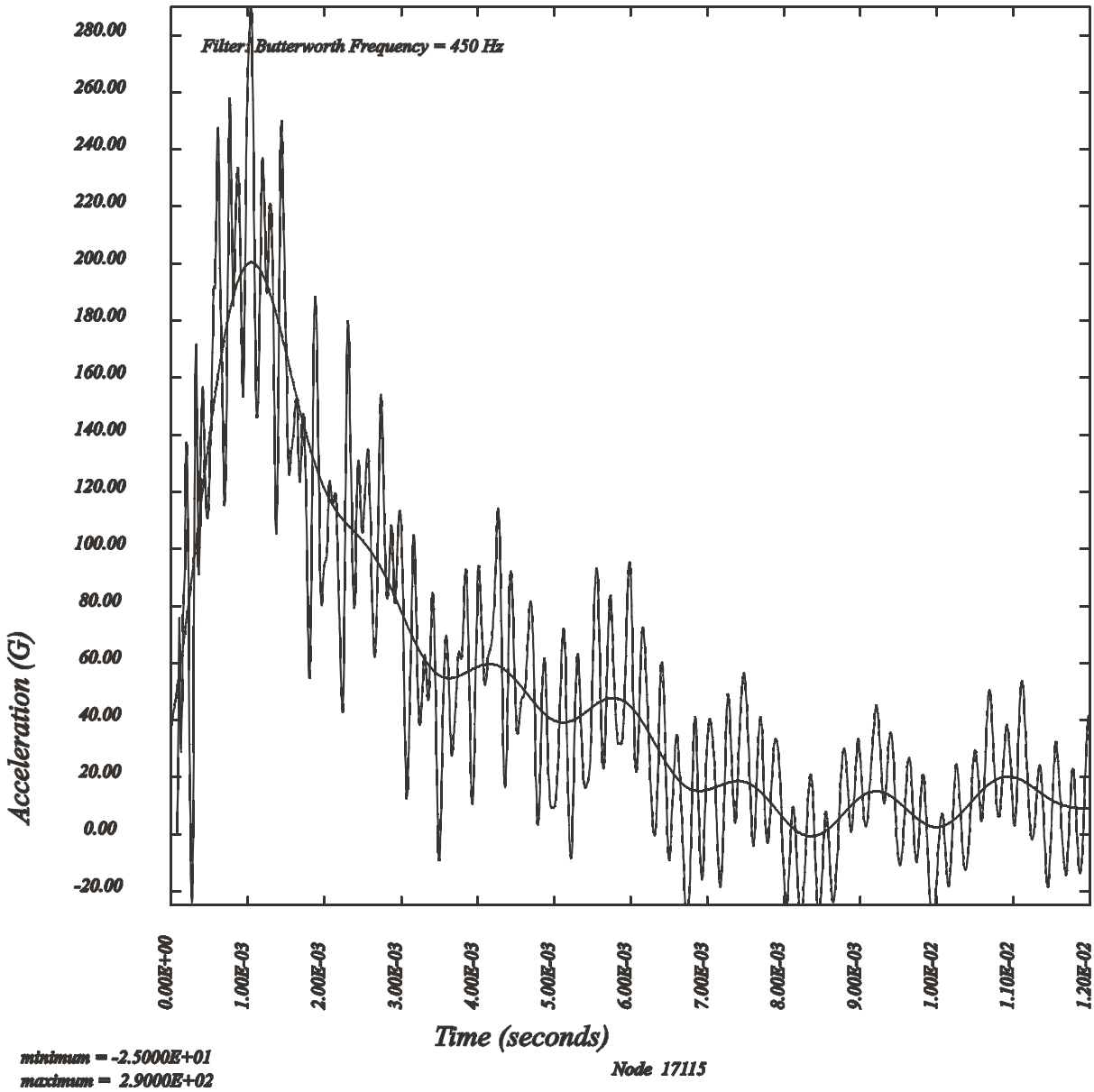

Figure 3.8-8 - Steel Billet 72" Side Drop FEM Analysis Acceleration Time-History

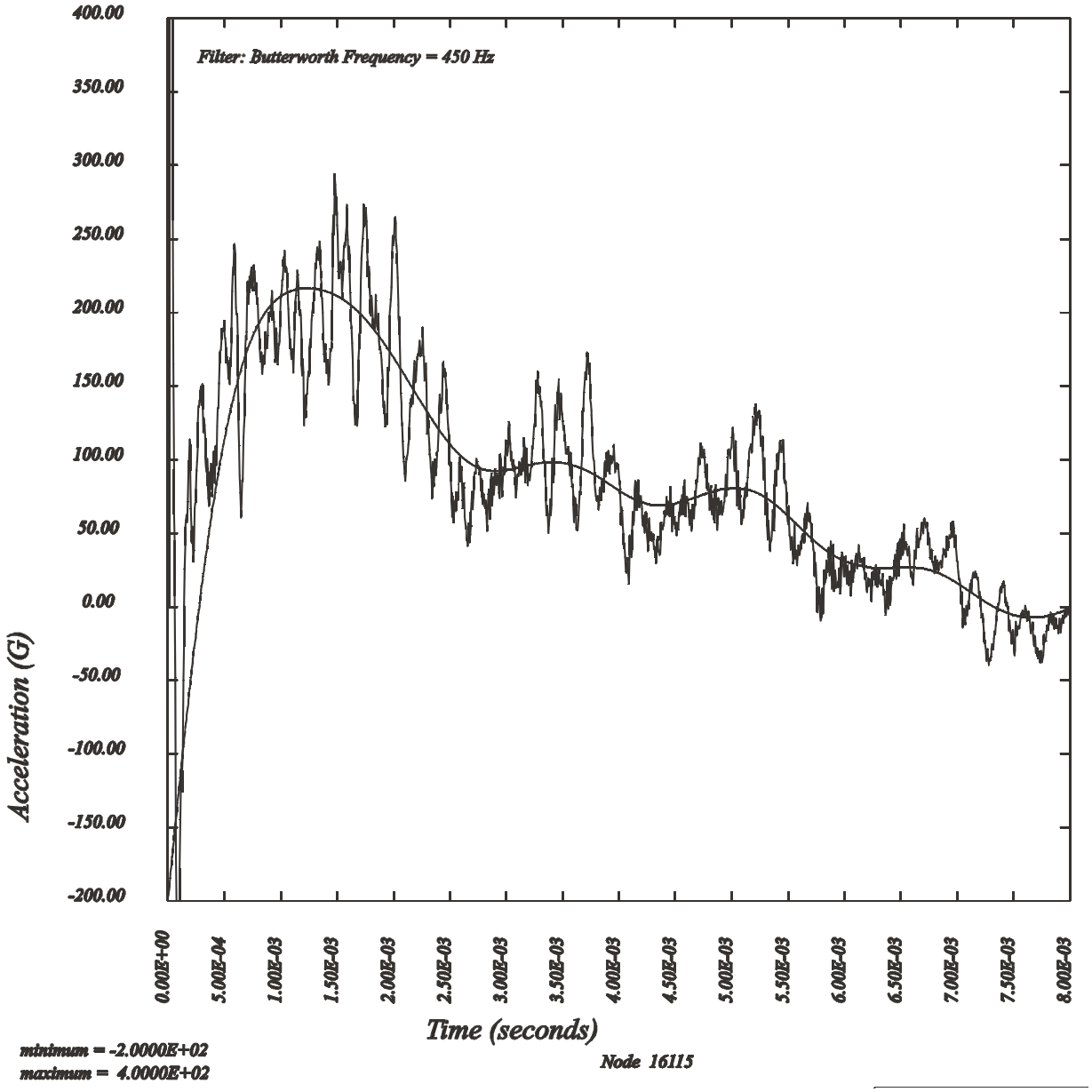

Figure 3.8-9 - Steel Billet Tip-Over Drop FEM Analysis Acceleration Time-History

3.9 Fuel Rods

The structural integrity of the fuel rod cladding under normal and accident conditions is addressed in the FuelSolutions™ Canister Storage FSARs.

This page intentionally left blank.

4. THERMAL EVALUATION

This chapter presents the thermal evaluations which demonstrate that the FuelSolutions™ W150 Storage Cask and FuelSolutions™ W100 Transfer Cask of the FuelSolutions™ Storage System meet the thermal requirements of 10CFR72[1] as defined in Section 2.3 of this FSAR for the dry storage of SNF. The FuelSolutions™ storage cask and transfer cask are designed to safely transfer and store SNF assemblies contained within a variety of FuelSolutions™ canisters. The specific canister used depends on the reactor type and SNF assembly class (i.e., PWR or BWR, etc.) and its initial enrichment, burnup and cooling time since discharge. The thermal design and safety evaluation for each FuelSolutions™ canister are addressed in Chapter 4 of the respective FuelSolutions™ Canister Storage FSAR.

As presented in this chapter, the FuelSolutions™ W150 Storage Cask and W100 Transfer Cask thermal designs are evaluated to assure acceptable thermal performance and to enable these components and the associated FuelSolutions™ canister to perform their intended safety functions during all credible normal, off-normal, and postulated accident conditions. Acceptable storage cask and transfer cask thermal ratings are established based on the applicable allowable temperatures for the materials of construction for the casks. Additionally, the thermal ratings of both casks are established based on the thermal performance of the most limiting cask. Thus the storage cask and transfer cask have the same thermal rating.

Worst case canister and fuel cladding temperatures are addressed for each canister and acceptable SNF assembly class and type in the respective FuelSolutions™ Canister Storage FSAR. The corresponding canister thermal ratings for storage of the SNF assembly classes and types accommodated by each canister are established based on the applicable allowable temperatures for the canister materials of construction and the fuel cladding. In addition, the thermal ratings for each canister are not allowed to exceed the thermal ratings of the storage cask and the transfer cask. This assures that fuel cladding temperatures are maintained below allowable values throughout the dry storage period to protect against cladding degradation and gross ruptures.

Generally, the FuelSolutions™ storage cask and transfer cask thermal ratings exceed those of the FuelSolutions™ canisters. A canister may not be loaded in the storage cask or transfer cask unless its thermal rating is bounded by the thermal rating of the casks. For the purposes of this safety evaluation, the heat load imposed on either cask by the decay heat of the SNF assemblies is represented by a bounding axial heat profile which envelopes that arising from any FuelSolutions™ canister utilized and the associated SNF assembly classes and types accommodated by these FuelSolutions™ canisters. In this manner, the qualification of the W150 Storage Cask and W100 Transfer Cask to determine the thermal rating is decoupled from the qualification and licensing of the various FuelSolutions™ canisters.

The thermal evaluations presented herein include steady-state and transient analyses of the thermal response of the storage cask and transfer cask to a defined set of thermal loading

[1] Title 10, Code of Federal Regulations, Part 72 (10CFR72), *Licensing Requirements for the Independent Storage of Spent Nuclear Fuel and High-Level Radioactive Waste,* United States Nuclear Regulatory Commission (USNRC), September 1995.

conditions. These loading conditions envelope the thermal conditions expected during all normal, off-normal, and postulated accident transfer and dry storage operations for the design basis thermal conditions defined in Section 2.3 of this FSAR and the design basis thermal loadings defined herein. The applicable allowable temperatures are presented and comparisons are made with calculated temperatures as the basis for acceptance.

As discussed in Chapter 7, confinement of all radioactive materials is provided by the FuelSolutions™ canister. Although the thermal design of the storage cask and the transfer cask provide assurance that the SNF assemblies remain sufficiently protected against degradation during dry storage that might otherwise lead to gross cladding ruptures, both casks are vented to atmosphere and cannot become pressurized. The determination of the maximum internal pressure for each canister resulting from normal, off-normal, and postulated accident conditions, which corresponds to the thermal response presented herein, is presented in Chapter 4 of the respective FuelSolutions™ Canister Storage FSAR.

4.1 Discussion

The thermal loads imposed on the FuelSolutions™ W150 Storage Cask and W100 Transfer Cask arise from the decay heat of the SNF assemblies and from the external environment, including insolation, as defined in Section 2.3. The storage and transfer casks are designed to passively dissipate the decay heat from the SNF assemblies to the ambient air while maintaining component temperatures within their allowable values. Solar heating effects are specifically addressed under the normal and off-normal conditions presented in Sections 4.4 and 4.5, respectively. The thermal response under postulated accident conditions, including a hypothetical fire event, is presented in Section 4.6.

The storage cask and transfer cask thermal ratings are discussed in Section 4.1.5. The design basis canister axial heat profile used for the thermal analysis is presented in Section 4.1.3. Since the decay heat within a typical SNF assembly class varies along its active fuel length, design basis axial heat profiles used for the storage cask and transfer cask are developed to bound the axial heat flux distribution, including peaking factors and axial burnup effects, for any FuelSolutions™ canister and SNF assembly class. The analytically trivial case of zero decay heat is evaluated for the purpose of demonstrating the compatibility of the cask components in a low temperature environment.

The thermal analysis is performed for normal, off-normal, and postulated accident conditions using the SINDA/FLUINT®[2] computer program. An overview of the SINDA/FLUINT® computer program is presented in Section 4.7.1. The thermal models used to evaluate the storage and transfer casks for normal conditions are presented in Sections 4.4.1.1 and 4.4.2.1, respectively.

This chapter presents thermal results for the design basis normal, off-normal, and postulated accident conditions. Section 4.2 provides the thermal properties of the materials of construction for the storage cask and transfer cask, and Section 4.3 provides the corresponding material specifications. Analytical model descriptions and thermal results are given in Sections 4.4, 4.5, and 4.6, for normal, off-normal, and postulated accident conditions, respectively. Supplemental data, including a description of the computer code used in the analysis are presented in Section 4.7.

4.1.1 Design Features

This section summarizes the storage cask and transfer cask design features that affect thermal performance. Storage cask and transfer cask design features are discussed further in Section 1.2.1. The configuration of the FuelSolutions™ W150 Storage Cask and W100 Transfer Cask are shown in Figures 1.2-2 and 1.2-6. Drawings of both casks are provided in Section 1.5 of this FSAR.

[2] SINDA/FLUINT®, *Systems Improved Numerical Differencing Analyzer and Fluid Integrator*, Version 4.0, Prepared for NASA, Johnson Spacecraft Center, Contract NAS9-19365, by Cullimore and Ring Technologies, Inc., Littleton, CO, 1998.

4.1.1.1 Storage Cask

The FuelSolutions™ W150 Storage Cask design consists of a modular concrete structure with three cylindrical segments and a concrete and steel cover at the top end. Incorporated within the cavity of the storage cask is a thick steel liner, an aluminum thermal shield, two hardened steel support rails, and six guide rails to center the canister and provide a bearing surface during canister transfer operations. The modular design approach facilitates standardization of the FuelSolutions™ Storage System for long and short FuelSolutions™ canisters by varying only the length of the center storage cask segment. The storage cask is designed to facilitate either vertical or horizontal canister transfer operations and passive vertical dry storage.

The FuelSolutions™ storage cask contains vent openings to allow naturally convected ambient air to flow in at the base of the cask through four inlet vents and converge into a single cylindrical inlet plenum at the bottom center of the cask. The cooler ambient air enters the cask cavity and flows radially outward under the canister, rises upward through the annulus between the canister and the thermal shield and between the thermal shield and cask liner, and flows out through four outlet vents near the top end of the cask, dissipating most of the decay heat generated within the canister. The flow paths for naturally circulating air which provides passive ventilation of the storage cask are illustrated in Figure 4.4-1. The inlet and outlet vents have protective screens attached to prevent the introduction of foreign material or wildlife into the storage cask. The remaining canister decay heat is dissipated by conduction through the storage cask wall. In addition, insolation is incident of the external surface of the storage cask. The thermal shield serves to protect the storage cask concrete from the elevated temperatures and the heat flux radiating from the surface of the canister shell. The inner surface of the thermal shield is coated to better radiate heat back to the annulus for removal by natural circulation and thus further reduce concrete temperatures.

Ventilation air flowing through the storage cask must overcome the form and friction pressure losses (e.g., the system losses) in order to flow by natural convection. The heat flux from the canister heats the air and provides the buoyant energy necessary to overcome these system losses by reducing the local air density and creating an upward driving force or “stack” effect. The volume of air flow through the system is a balance between the system losses and the buoyancy forces.

The primary thermal design features of the storage cask include:

- Passive heat removal by natural convection, radiation, and conduction to the ambient.
- The vertical orientation of the cask and the relative locations of the inlet and outlet vents maximize the stack height.
- A coated thermal shield mitigates radiative heat transfer from the canister to the concrete wall.
- A thick carbon steel liner provides structural protection for the concrete and promotes axial heat conduction.
- The size and location of the vents and flow annulus through the storage cask are designed to minimize expansion, contraction, and frictional flow pressure losses for the passive air flow through the cask, maximizing convective heat removal at lower differential air temperatures. Additionally, the inlet and outlet vent screens are sized to minimize flow restrictions.

- The canister is supported vertically above the bottom of the storage cask cavity by multiple tubes which provide for radial air flow distribution under the canister and into the annulus for minimum air flow resistance.
- A centering guide rail system is used to maintain a minimum separation between the canister and the storage cask inner wall.
- An inner annulus between the canister shell and the thermal shield, and an outer annulus between the thermal shield and the steel liner form dual air paths for convective cooling.
- Two thermocouples are provided for storage cask temperature monitoring. One thermocouple is located at mid-height and mid-thickness of the storage cask concrete wall, and the second thermocouple is located at mid-height at the liner/concrete interface. The storage cask thermocouple locations are shown in Figure 4.1-6. These thermocouples provide a means of periodic temperature monitoring and direct confirmation of thermal performance. The thermocouples may be monitored periodically, as defined in the *technical specification* contained in Section 12.3 of this FSAR, to assure that the maximum short-term allowable surface concrete temperature (350°F) is not exceeded by correlation of the surface concrete temperature to the thermocouple readings.

4.1.1.2 Transfer Cask

The FuelSolutions™ W100 Transfer Cask is designed to dissipate the decay heat from the canister primarily through conduction. The transfer cask side wall consists of a stainless steel inner liner, a thick lead gamma shield, a thick stainless steel structural shell, a liquid (water) neutron shield, and a thin outer shell, which forms the jacket for the liquid neutron shield. The transfer cask cylindrical shells are welded to stainless steel top and bottom flanges.

The transfer cask top cover, ram access cover, and bottom cover assemblies consist of thick stainless steel plates with solid neutron shielding installed on the top or bottom. Neutron shielding for the top cover, ram access cover, and bottom cover is provided by RX-277[3] or NS-3,[4] which are solid hydrogenous neutron absorbing materials encased in stainless steel shells. Since the transfer cask is designed to stand vertically, the bottom cover includes thick stainless steel outer and inner support rings. The top cover and ram access cover are removed during canister loading and closure operations. All covers are installed during transfer cask handling operations. All of the transfer cask covers are removed for vertical canister transfer while only the bottom cover and ram access cover are removed for horizontal canister transfer.

The transfer cask cavity inside diameter is larger than the canister outside diameter, creating a small annulus. Two thin rails attached to the transfer cask inner shell support the canister within the transfer cask cavity when horizontal. During SNF loading operations, this annulus is filled with clean demineralized water and sealed to prevent radiological contamination of the canister outer shell or transfer cask inner cavity. The annulus water also provides radiation shielding and enhances conductive heat transfer. Following canister closure operations, the annulus is drained

[3] Bulletin S-73N, Catalog No. 277 Shielding Technical Data, Reactor Experiments, Inc., August 1991.

[4] Test Report NS-3-001, GESC NS-3, NAC International, Atlanta Corporate Headquarters, 655 Engineering Drive, Norcross, GA.

and vented. The transfer cask/canister annulus is provided with vent and drain connections on opposite sides of the cask to allow water recirculation, as desired for annulus water temperature control and monitoring. This operational feature allows active canister cooling prior to canister reflooding and opening operations. Annulus recirculation during loading also allows heat removal through recirculation to prevent annulus boiling and pressurization.

The liquid neutron shield may remain drained during SNF loading operations if necessary to minimize transfer cask weight for handling. In this scenario, the liquid neutron shield is filled prior to canister draindown. The liquid neutron shield is equipped with vent and drain connections and a pressure relief device for overpressure protection. Sixteen equally spaced outer shell support ribs contain flow holes to allow circulation and mixing of the neutron shield liquid when the cask is horizontal. The liquid neutron shield has superior conduction and convection properties in comparison to solid neutron shielding materials or air.

The primary thermal design features of the transfer cask are as follows:

- Transfer cask heat removal is accomplished primarily by conduction through the walls of the cask.
- The lead gamma shield is formed by pouring molten chemical lead between the inner liner and structural shell, thus minimizing air gaps due to fabrication tolerances.
- The outer surface of the liquid neutron shield jacket is provided with a high emissivity, low absorptivity coating to enhance radiation heat transfer from the cask while minimizing the effects of insolation.
- The transfer cask/canister annulus is provided with vent and drain connections to allow annulus water recirculation for active heat removal.
- A thermocouple is provided at mid-height on the surface of the cask structural shell to provide a means of periodic temperature monitoring and direct confirmation of thermal performance during on-site transport and horizontal canister transfer operations. The location of the transfer cask thermocouple is shown in Figure 4.1-7. The sealed thermo-well penetrates the liquid neutron shield to allow temperature monitoring on the outer surface of the transfer cask structural shell.

4.1.2 Design Basis Ambient Conditions

In accordance with 10CFR72, a range of long and short-term natural ambient conditions are considered in the safety evaluation of the storage cask and transfer cask as defined in Section 2.3. These ambient conditions are assumed to occur concurrently with the design basis normal, off-normal, and postulated accident events (i.e., blocked vents, loss of neutron shield, etc.) and form the design basis thermal loading conditions for the storage cask and transfer cask.

The design basis normal, off-normal, and postulated accident events are in accordance with ANSI/ANS 57.9-1992[5], as defined in Section 2.3. Off-normal events are defined as those that are expected to occur on the order of once per calendar year. The designs must withstand such

[5] ANSI/ANS-57.9, *Design Criteria for an Independent Spent Fuel Storage Installation (Dry Type)*, American National Standards Institute, American Nuclear Society, 1992.

off-normal conditions without negative impact on safety and without decrease in functionality that would require the component to be removed from service. Accident events are defined as those that might occur only once during the use of the storage cask or transfer cask. The component designs must withstand such accident conditions without negative impact on the safety, but may suffer damage such that the system would have to be removed from service after such an event.

The analyses presented herein are based on conservative assumptions and methodologies. Because of this conservative approach, the actual response of the system components to the design basis events is expected to produce larger positive design margins than reported (i.e., lower temperatures and thermal stresses).

As defined in Section 2.3, a normal long-term annual average ambient temperature of 77°F is selected for indoor and outdoor FuelSolutions™ Storage System operations which bounds all site locations in the United States. The annual average ambient temperature is utilized for all indoor analyses since the indoor ambient conditions are less severe than outdoors (i.e., no insolation). Cask analyses under worst case outdoor ambient conditions bound indoor conditions which are protected from the outdoor ambient extremes and typically controlled for personnel occupation. To support worst case structural analysis of the storage cask and transfer cask, variations from the average ambient temperature value are evaluated for steady-state outdoor ambient temperatures in the range of 0°F (normal cold) to 100°F (normal hot). The effects of extreme off-normal outdoor ambient temperatures in the range of -40°F to 125°F are evaluated for both the storage cask and transfer cask. Since these ambient conditions will not exist for extended periods of time, short-term allowable material temperatures apply. For storage cask and transfer cask off-normal and postulated accident thermal conditions involving configuration changes (i.e., horizontal storage cask, blocked vents, loss of liquid neutron shielding), the maximum steady-state normal hot ambient temperature of 100°F is conservatively assumed during the events.

The 10CFR71 recommended values for insolation are presented in Section 2.3. Although the solar heat loads specified by 10CFR71 are defined for a 12-hour period, the large thermal inertia of the storage cask and transfer cask prevents an instantaneous thermal response over short periods of time. Therefore, the 12-hour insolation values are averaged over a 24-hour period to obtain average solar heat loads which are conservatively assumed to be steady-state for use in the normal and off-normal thermal analysis as recommended by the SRP.[6] Insolation is considered for the appropriate normal and off-normal hot conditions, specifically, 77°F, 100°F, and 125°F ambient conditions. Additionally, insolation is applied for the configuration dependent off-normal and postulated accident conditions (i.e., horizontal storage cask, all vents blocked accident, loss of neutron shield). Insolation is neglected for indoor operations and normal and off-normal cold conditions. Neglecting insolation is conservative for the cold conditions since additional heat input through the cask exterior wall would reduce thermal gradients and stresses in the cask components.

[6] NUREG-1536, *Standard Review Plan for Dry Cask Storage Systems*, Spent Fuel Project Office, January 1997.

4.1.3 Bounding Axial Heat Generation Profile

The axial heat flux profile within the storage and transfer casks is dependent upon the SNF decay heat generation within the FuelSolutions™ canister. The variation in heat generation within a canister is a function of 1) the SNF assembly class, 2) the corresponding heavy metal content, burnup and cooling time, 3) the total number of SNF assemblies in the canister, 4) the active core length of the SNF assemblies, and 5) the axial position of the active SNF assembly length within the canister. These variables are set by either the canister type or the characteristics of the specific SNF assemblies to be loaded. The specific SNF assembly classes and their characteristics which are accommodated by each FuelSolutions™ canister are discussed in the respective FuelSolutions™ Canister Storage FSAR.

Burnup for a given fuel assembly class determines the SNF assembly's total heat load (kW) at the time of reactor discharge and the profile of the heat load vs. fuel axial position. A uniform burnup over the entire active fuel length would result in a flat axial heat profile with no peaks (peaking factor of 1.0). Since fuel does not burn uniformly over the entire axial length, heat flux peaks exist in the center regions of the assembly. As burnup increases, the total heat load from the SNF assembly also increases and the peaking factor becomes more uniform along the active fuel length. SNF assemblies with low burnup may have a relatively low total heat load, but they typically exhibit locally high linear heat generation rates (kW/in). Thus, it is possible for a low burnup SNF assembly with limited cooling time to yield higher local temperatures in the canister and casks due to this locally high linear heat generation rate even though the total heat load in the canister is below the maximum heat load rating.

In order to address the axial heat flux profile variations with SNF assembly class and burnup, two thermal rating criteria are utilized for storage and transfer cask qualification. These thermal ratings are: 1) maximum heat load rating (Q_{max}), and 2) maximum linear heat generation rate ($LHGR_{max}$) on a per unit length basis. Both thermal ratings are needed to define the allowable cask or canister thermal ratings. Although the maximum heat load rating (Q_{max}) is the major determining factor in the overall temperature levels within the casks and canisters, the temperature levels at any specific location are more directly affected by the maximum linear heat generation rate ($LHGR_{max}$). This is especially true where the cask or canister design and the material thermal conductivity combine to inhibit the axial spreading of localized heat effects.

4.1.3.1 Development of Bounding Axial Heat Generation Profiles

Figure 4.1-2 presents the design basis peaking factors utilized for all PWR and BWR fuel assembly classes accommodated by FuelSolutions™ canisters. These peaking factors are based on 44 GWd/MTU burnup for PWR[7] fuel and 29 GWd/MTU burnup for BWR[8] fuel. As can be seen from the figure, while the shapes of the peaking factor curves are generally similar, the BWR fuel generates a greater portion of its heat in the lower half of the active fuel length and exhibits a faster fall off in heat near the ends. In both cases, however, the level and shape of the curves are such that the area under either curve is set equal to 1.0. As such, distributing the total

[7] DOE/RW-0495, *Depletion and Package Modeling Assumptions for Actinide-Only Burnup Credit*, Office of Civilian Radioactive Waste Management, U.S. Department of Energy, May 1997.

[8] NFS:BND:95-083, Commonwealth Edison BWR Fuel Data, Letter from A. S. Pallotta of BWR Nuclear Design, Nuclear Fuel Services to A. G. Panagos, July 10, 1995.

heat generation along the length of the active portion of the SNF assembly according to the values specified by the curve yields the local heat generation, while conserving the total heat generation.

A curve fit through the maximum peaking factor observed for each SNF assembly class as a function of burnup is presented in Figure 4.1-3 for PWR fuel and in Figure 4.1-4 for BWR fuel. As stated earlier, lower burnup SNF has a higher maximum axial peaking factor than higher burnup SNF. Additionally, the BWR fuel peaking factors are typically higher than those for PWR fuel. Because of this highly non-uniform peaking factor vs. burnup level, an adjustment/penalty factor is included for low burnup fuels to extend the required SNF cooling times even if the total canister maximum heat load rating (Q_{max}) meets the thermal rating criteria established for each cask or canister type. The low burnup penalty factor is established assuming a baseline burnup of 44 GWd/MTU for PWR fuels and 29 GWd/MTU for BWR fuels. SNF assemblies with burnups less than the nominal values are essentially de-rated to normalize the lower burnup peaks with the baseline. Although appropriate, an adjustment/credit is conservatively not applied for SNF assemblies with burnups greater than the nominal values.

While the curves in Figure 4.1-2 depict how the heat generation is expected to vary along the SNF assembly active fuel length, they do not directly yield the variation in heat load along the canister side wall. This is a function of the axial location of the active fuel within the canister and how the canister's internal heat transfer modes spread the heat generated by the SNF assemblies to the canister side wall and top and bottom ends.

To create a bounding canister axial heat profile for use in storage cask and transfer cask thermal analysis, the design basis peaking factor curve for the appropriate SNF assembly type (PWR or BWR) is adjusted for the active fuel length location within the corresponding FuelSolutions™ canister type. The BWR axial heat profiles are then multiplied by 0.90 (i.e., the ratio of the design PWR to BWR peaking factors, 1.095/1.22) in order to normalize them with respect to the design basis nominal PWR curve. Using this profile, a generic canister axial heat profile is developed which thermally bounds all of the profiles resulting from each canister/SNF combination. This bounding axial heat profile, termed the "max. thermal" profile (Figure 4.1-5), envelopes the worst case axial heat profile expected from any canister within the storage cask or transfer cask in the vertical or horizontal orientation. An active fuel length of 150" is utilized for the "max. thermal" profile, since this active fuel length is representative of longest active fuel length (i.e., CE 16x16 PWR fuel) to be accommodated by the FuelSolutions™ Storage System.

While the "max. thermal" profile yields the maximum heat load rating (Q_{max}) that a canister or cask can accommodate, it does not address the negative impact associated with the loading of short length SNF assemblies with relatively little cooling time. Such a fuel loading could yield a lower total heat load rating than that determined using the "max. thermal" profile, but still result in higher local canister and/or cask temperatures due to the concentration of the heat flux over a limited axial length. The "max. thermal gradient" profile (Figure 4.1-5) addresses the worst case thermal gradient expected. This profile is used to determine the maximum linear heat generation rate ($LHGR_{max}$) that can be accommodated without exceeding local component allowable temperatures and to provide worst case axial thermal gradients for structural analysis. An active fuel length of 91" is assumed for the "max. thermal gradient" profile, since this active fuel length is representative of the shortest PWR fuel length (e.g., Yankee Rowe PWR fuel) to be accommodated by the FuelSolutions™ Storage System.

It should be noted that the design basis axial heat profiles are enveloping but are not intended to be an exact match of any of the SNF assembly specific profiles. Also, while the Figure 4.1-5 profiles are developed to cover both long (192") and short (182") FuelSolutions™ canisters, the short canister configuration generally presents the bounding case for thermal purposes since it concentrates the heat load over a shorter length within the storage cask and transfer cask.

4.1.3.2 Application of Axial Heat Generation Profiles for Cask Analysis

Each storage cask and transfer cask thermal model includes the canister shell assembly, including the shield plugs, as boundary conditions for the qualification thermal model. Using the axial heat generation profiles in Figure 4.1-5, the local heat load (Q_{Local}) at a specific axial location in the analytical models is determined as follows:

$$Q_{Local} = \left(\frac{Q_{Total}}{AFL}\right) \cdot PF \cdot L$$

where:

Q_{local} = is the local canister heat at the nodal location

Q_{Total} = total canister heat load (kW)

AFL = active fuel length in inches for the associated axial profile (i.e., 150" for the "max. thermal," and 91" for the "max. thermal gradient" profiles)

PF = local peaking factor at the center of region being modeled

L = axial length in inches of the region being modeled

For determination of the allowable storage cask and transfer cask thermal ratings at design basis conditions, the value of Q_{Total} is increased for each axial heat profile until one or more of the cask allowable material temperatures are reached. The maximum value of Q_{Total} that meets all cask allowable temperatures represents the maximum heat load rating (Q_{max}) for that axial heat profile and cask. The storage cask and transfer cask thermal ratings are determined independent of the thermal ratings of the canisters. The derivation of thermal ratings for each FuelSolutions™ canister which is coupled with those of the storage cask and transfer cask is provided in Chapter 4 of the respective FuelSolutions™ Canister Storage FSAR.

While a thermal rating based on maximum heat load accounts for the global thermal effects on the casks, it does not necessarily account for local hot spots caused by a variation in SNF assembly type, burnup, and/or active fuel length. Correction for these effects is accomplished using the linear heat generation rate as discussed above. The maximum linear heat generation rate ($LHGR_{max}$) is determined as follows:

$$LHGR_{Max} = \frac{Q_{Max} \cdot PF}{AFL}$$

where:

$LHGR_{max}$ = max. canister linear heat generation rate (kW/inch) for the given profile

Q_{max} = maximum heat load for the given axial heat profile (kW)

PF = peaking factor

AFL = assumed active fuel length for the profile analyzed (inches). Equals 150" for the "max. thermal", and 91" for the "max. thermal gradient" profiles.

Repeating the allowable thermal rating qualification analysis for each of the axial heat profiles presented in Figure 4.1-5 yields one value for maximum heat load rating (Q_{max}) and one value for the associated maximum linear heat generation rate ($LHGR_{max}$) for each profile. The maximum value for Q_{max} and $LHGR_{max}$ from either axial heat profile becomes the qualifying thermal rating for the storage cask or transfer cask for the design basis conditions. Additionally, the final thermal ratings for both the storage cask and transfer cask are identical, and based on the most limiting of the two casks. Generally, Q_{max} is determined from the "max. thermal" profile and $LHGR_{max}$ is determined from the "max. thermal gradient" profile. This is especially true since the cask thermal designs efficiently transfer heat axially, reducing the influence of locally higher heat generation rates.

4.1.4 Thermal Operating Modes

As discussed in Chapters 1 and 8 of this FSAR, the versatility of the FuelSolutions™ W150 Storage Cask and W100 Transfer Cask creates numerous operating modes with varying thermal conditions. Cask thermal qualification is based on the worst case operating conditions and the corresponding combinations of thermal parameters which results in the most restrictive thermal rating and margins between cask temperatures and the corresponding allowable temperatures for the materials of construction. The storage and transfer casks are evaluated for the enveloping design basis thermal conditions in order to bound cask thermal performance for all normal, off-normal, and postulated accident conditions expected during the operating life of the component.

4.1.4.1 Storage Cask

The primary operating parameters which influence storage cask thermal performance include location (inside, outside), orientation (vertical, horizontal), top cover installation (on, off), inlet and outlet vent condition (open, blocked), ambient temperature (-40°F, 0°F, 77°F, 100°F, 125°F, and 1475°F (fire), and insolation (on, off). Various combinations of these parameters define the bounding storage cask normal, off-normal, and accident thermal conditions. Storage cask thermal operating modes are presented in Table 4.1-1.

Storage cask design basis thermal load cases summarized in Table 4.1-3 are selected in order to bound all normal, off-normal, and accident operating modes presented in Table 4.1-1. Of the operating modes listed in Table 4.1-1, the limiting steady-state cases considered include normal storage (case 5), normal cold storage (case 6), normal hot storage (case 7), off-normal cold storage (case 8) and off-normal hot storage (case 9). Storage cask system temperatures inside during vertical canister transfer (cases 1 through 3) and during air pallet or transporter handling (case 4) are bounded by the all vents blocked accident (case 11) when the vents are blocked and by normal storage (case 5) when the vents are open. Outlet vents blocked accident (case 10) is bounded by the transient analysis for the all vents blocked accident (case 11). All horizontal orientation modes are bounded by the transient analysis for horizontal canister transfer (case 13). The transient fire accident (case 15) is also considered.

For the determination of storage cask thermal ratings (Q_{max} and $LHGR_{max}$), only worst case steady-state normal and off-normal conditions are considered. Although some short-term operating modes may result in steady-state temperatures at the thermal ratings which exceed allowable material temperatures, transient analyses of these short-term operating modes (i.e., all vents blocked accident, horizontal storage cask) are performed. The maximum storage cask thermal ratings are applied concurrently with the thermal load cases in Table 4.1-3 to determine the storage cask temperature distribution for each case.

4.1.4.2 Transfer Cask

The primary operating parameters which influence transfer cask thermal performance include location (inside, outside), orientation (vertical, horizontal), ambient temperature -40°F, 0°F, 77°F, 100°F, 120°F, 125°F, and 1475°F (fire), annulus fluid (water, water flow, air), top cover installation (on, off), bottom cover installation (on, off), liquid neutron shield fluid (water, air), and insolation (on, off). The transfer cask thermal operating modes are summarized in Table 4.1-2.

Transfer cask design basis thermal load cases summarized in Table 4.1-4 are selected in order to bound all normal, off-normal, and accident conditions in Table 4.1-2. The transfer cask thermal ratings are applied concurrently with the applicable thermal load cases presented in Table 4.1-4 to determine the temperature distribution for each case. Of the operating modes listed in Table 4.1-2, the limiting cases considered include pool removal (case 3), handling (case 10), normal transfer (case 13), normal cold transfer (case 14), normal hot transfer (case 15), off-normal cold transfer (case 16), off-normal hot transfer (case 17), loss of neutron shielding (case 18), and fire accident (case 20). Conditions during loading and canister closure operations (cases 1 through 8) are bounded by the analyzed loading condition (case 3). Conditions during vertical handling and transfer (cases 9 through 11) are bounded by the analyzed handling condition (case 10). Transfer cask temperatures during horizontal transfer conditions (cases 12 through 17) are bounded by the design basis normal hot transfer conditions (case 15). Thermal analyses for off-normal cold transfer (case 16) include a steady state analysis with the design basis heat load (case 16a) and a transient analysis with no heat load starting from a steady state temperature of 77°F (case 16b). Case 16a is performed to evaluate thermal gradients, while case 16b is performed to determine a limit on transfer cask thermocouple temperature which can be monitored to prevent freezing of the liquid neutron shield water. The canister reflood conditions (case 19) include recirculation of the transfer cask annulus water in order to lower canister temperatures. The canister reflood case is also bounded by the vertical handling condition (case 10). The transient fire accident (case 20) is also considered.

For the determination of transfer cask thermal ratings (Q_{max} and $LHGR_{max}$), only worst case steady-state normal and off-normal conditions are considered. Since the transfer cask material does not have short-term allowable temperatures, long-term allowables apply even to off-normal conditions. As discussed later in Section 4.3, the transfer cask lead shielding material peak temperature is maintained below the melting point of 620°F. The transfer cask thermal ratings are applied concurrently with the thermal load cases in Table 4.1-4 to determine the transfer cask temperature distribution for each case.

Steady-state conditions can be achieved at the thermal rating during transfer cask off-normal and accident conditions without exceeding allowable material temperatures. As a result, transient

thermal analysis is not necessary for the thermal qualification of the transfer cask. However, a transient analysis is performed for off-normal cold transfer conditions (case 16b) as a basis for monitoring the transfer cask thermocouple temperature to prevent freezing of the liquid neutron shielding water. A *technical specification* for monitoring this temperature is based on measured values of the transfer cask thermocouple.

4.1.5 Thermal Rating Summary

The maximum storage and transfer cask thermal ratings are determined by applying the bounding canister axial heat flux profiles (Section 4.1.3) to the storage cask and transfer cask steady-state thermal models under design basis ambient conditions (Section 4.1.2), for the design basis cask operating modes (Section 4.1.4). The maximum cask decay heat generation rate (Q_{max}) and linear heat generation rate ($LHGR_{max}$) are established based on cask allowable material temperatures. The most limiting thermal rating for the storage cask and transfer cask is established as the thermal rating for both casks. The resulting maximum allowable cask thermal ratings are summarized in Table 4.1-5. System temperatures under the various bounding cask operating modes are presented in Sections 4.4, 4.5, and 4.6 for normal, off-normal, and postulated accident conditions, respectively.

Table 4.1-1 - FuelSolutions™ W150 Storage Cask Operating Modes

Case	Operation	Location	Orientation	Ambient Temp (°F)	Top Cover	Inlet Vents	Outlet Vents	Solar
1	Canister Transfer	Inside	Vertical	77	Off	Blocked(1)	Blocked	N/A
2	Canister Transfer	Inside	Vertical	77	Off	Blocked(1)	Open	N/A
3	Canister Transfer	Inside	Vertical	77	On	Blocked(1)	Open	N/A
4	Air Pallet or Transporter Handling	Outside	Vertical	77	On	Blocked(1)	Open	Yes
5	Normal Storage	Outside	Vertical	77	On	Open	Open	Yes
6	Normal Cold Storage	Outside	Vertical	0	On	Open	Open	No
7	Normal Hot Storage	Outside	Vertical	100	On	Open	Open	Yes
8	Off-Normal Cold Storage	Outside	Vertical	-40	On	Open	Open	No
9	Off-Normal Hot Storage	Outside	Vertical	125	On	Open	Open	Yes
10	Vents Blocked Accident	Outside	Vertical	100	On	Open	Blocked	Yes
11	All Vents Blocked Accident	Outside	Vertical	100	On	Blocked	Blocked	Yes
12	Canister Transfer	Outside	Horizontal	100	Off	Open	Blocked	Yes
13	Canister Transfer	Outside	Horizontal	100	On	Open	Blocked	Yes
14	Canister Transfer	Outside	Horizontal	100	On	Open	Open	Yes
15	Fire Accident	Outside	Vertical	1475	On	Open	Open	Yes(2)

Table 4.1-1 Notes:

(1) Inlet vents blocked by jacks or shims only for a short duration.
(2) Insolation applied before and after fire accident event.

Table 4.1-2 - FuelSolutions™ W100 Transfer Cask Operating Modes

Case	Operation	Location	Orientation	Amb. Temp (°F)	Annulus	Top Cover	Bottom Cover	Liquid Neutron Shield	Solar
1	Canister Loading	Pool	Vertical	120	Water	Off	On	Air	N/A
2	Canister Loading	Pool	Vertical	120	Water	Off	On	Water	N/A
3	Pool Removal	Inside	Vertical	77	Water	Off	On	Air	N/A
4	Canister Welding	Inside	Vertical	77	Water Flow	Off	On	Water	N/A
5	Canister Draindown	Inside	Vertical	77	Water Flow	Off	On	Water	N/A
6	Canister Vacuum Drying	Inside	Vertical	77	Water Flow	Off	On	Water	N/A
7	Annulus Draining	Inside	Vertical	77	Air	Off	On	Water	N/A
8	Canister Inerting	Inside	Vertical	77	Water Flow	Off	On	Water	N/A
9	Cask Handling	Inside	Vertical	77	Air	Off	On	Water	N/A
10	Cask Handling	Inside	Vertical	77	Air	On	On	Water	N/A
11	Canister Transfer	Inside	Vertical	77	Air	Off	Off	Water	N/A
12	Normal Transfer	Inside	Horizontal	77	Air	On	On	Water	N/A
13	Normal Transfer	Outside	Horizontal	77	Air	On	On	Water	Yes
14	Normal Cold Transfer	Outside	Horizontal	0	Air	On	On	Water	No
15	Normal Hot Transfer	Outside	Horizontal	100	Air	On	On	Water	Yes
16	Off-normal Cold Transfer	Outside	Horizontal	-40	Air	On	On	Water	No
17	Off-normal Hot Transfer	Outside	Horizontal	125	Air	On	On	Water	Yes
18	Loss of Neutron Shield	Outside	Horizontal	100	Air	On	On	Air	Yes
19	Canister Reflood	Inside	Vertical	77	Water (flow)	Off	On	Water	N/A
20	Fire Accident	Outside	Horizontal	1475	Air	On	On	Water	Yes(1)

Table 4.1-2 Notes:

(1) Insolation applied before and after fire accident event.

Table 4.1-3 - Storage Cask Design Basis Load Cases

Case	Mode	FSAR Section	Ambient Temp. (°F)	Insolation by Surface Type & Orientation (BTU/hr-ft^2 (W/m^2))			Type of Analysis
				top (cask vert)	sides (cask vert./horiz)	top (cask horiz)	
5	Normal Storage	4.4	77	123 (388)	62 (194)	n/a	Steady-State
6	Normal Cold Storage	4.4	0	0	0	n/a	Steady-State
7	Normal Hot Storage	4.4	100	123 (388)	62 (194)	n/a	Steady-State
8	Off-normal Cold Storage	4.5	-40	0	0	n/a	Steady-State
9	Off-normal Hot Storage	4.5	125	123 (388)	62 (194)	n/a	Steady-State
11	All Vents Blocked Accident	4.6	pre-event, 77	123 (388)	62 (194)	n/a	Steady-State
			during event, 100	123 (388)	62 (194)	n/a	Transient
13a	Canister Transfer (Loading)	4.5	pre-event, (empty cask) 100	123 (388)	62 (194)	n/a	Steady-State
			during event, 100	n/a	62 (194)	31 (97)	Transient
13b	Canister Transfer (Unloading)	4.5	pre-event, 77	123 (388)	62 (194)	n/a	Steady-State
			during event, 100	n/a	62 (194)	31 (97)	Transient
15	Fire Accident	4.6	pre-event, 100	123 (388)	62 (194)	n/a	Steady-State
			during event, 1475	0	0	n/a	Transient
			post-event 100	123 (388)	62 (194)	n/a	Transient

Table 4.1-4 - Transfer Cask Design Basis Load Cases

Case	Mode	FSAR Section	Ambient Temp.(°F)	Insolation by Surface Type & Orientation (BTU/hr-ft^2 (W/m^2))			Type of Analysis
				top (cask vert)	sides (cask vert./horiz)	top (cask horiz)	
3	Pool Removal	4.4	77	n/a	n/a	n/a	Steady-State
10	Cask Handling	4.4	77	n/a	n/a	n/a	Steady-State
13	Normal Transfer	4.4	77	n/a	62 (194)	31 (97)	Steady-State
14	Normal Cold Transfer	4.4	0	n/a	0	0	Steady-State
15	Normal Hot Transfer	4.4	100	n/a	62 (194)	31 (97)	Steady-State
16a	Off-normal Cold Transfer	4.5	-40	n/a	0	0	Steady-State
16b	Off-normal Cold Transfer	4.5	-40, with 30 mph wind	n/a	0	0	Transient
17	Off-normal Hot Transfer	4.5	125	n/a	62 (194)	31 (97)	Steady-State
18	Loss of Neutron Shield	4.6	100	n/a	62 (194)	31 (97)	Steady-State
20	Fire Accident	4.6	pre-event, 100	n/a	62 (194)	31 (97)	Steady-State
			during event, 1475	n/a	0	0	Transient
			post-event 100	n/a	62 (194)	31 (97)	Transient

Table 4.1-5 - Storage and Transfer Cask Thermal Ratings

Q_{max} (kW)	$LHGR_{max}$ (kW/in)
28.0	0.253

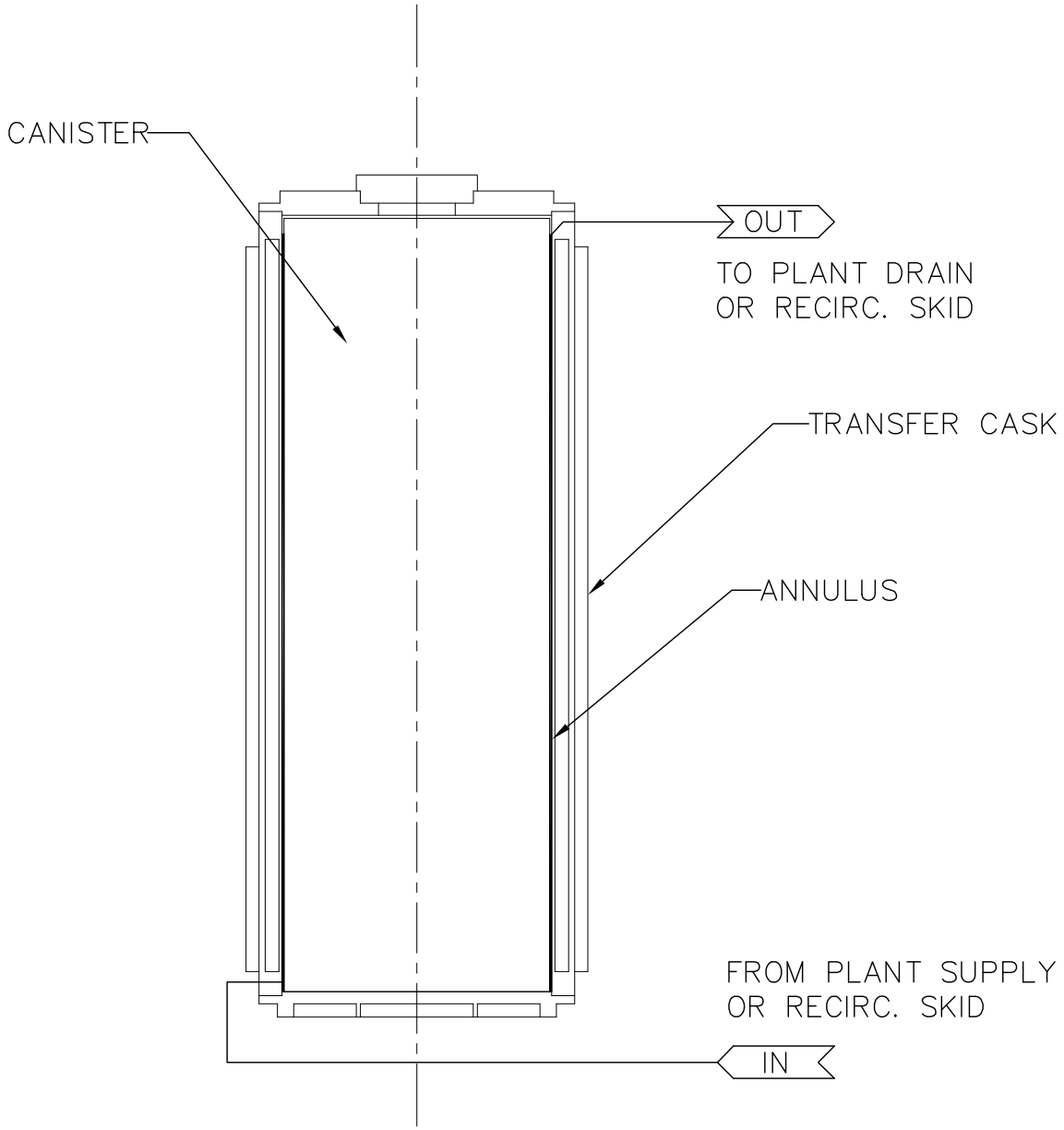

Figure 4.1-1 - Transfer Cask Annulus Recirculation

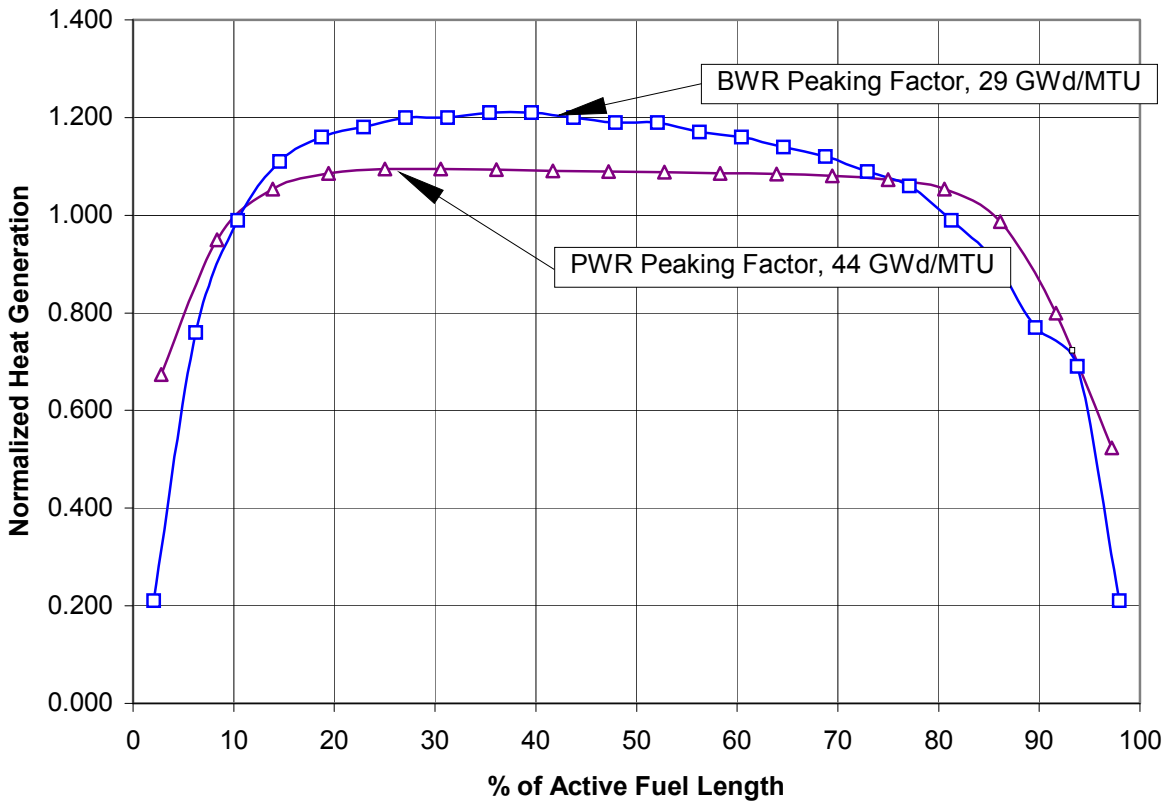

Figure 4.1-2 - Design Basis Axial Peaking Factors for PWR and BWR Fuels

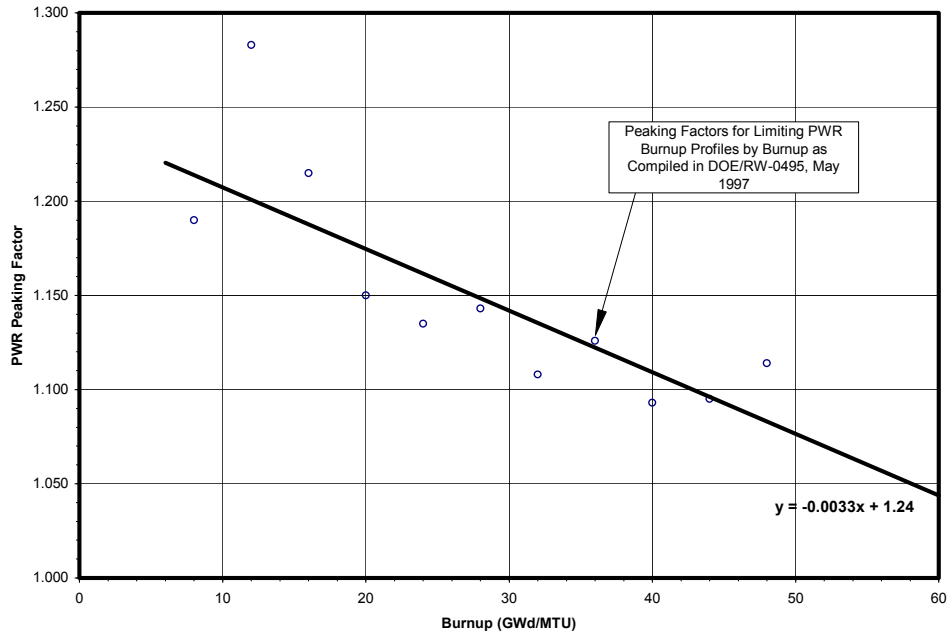

Figure 4.1-3 - Max. Peaking Factor vs. Burnup for PWR Fuel

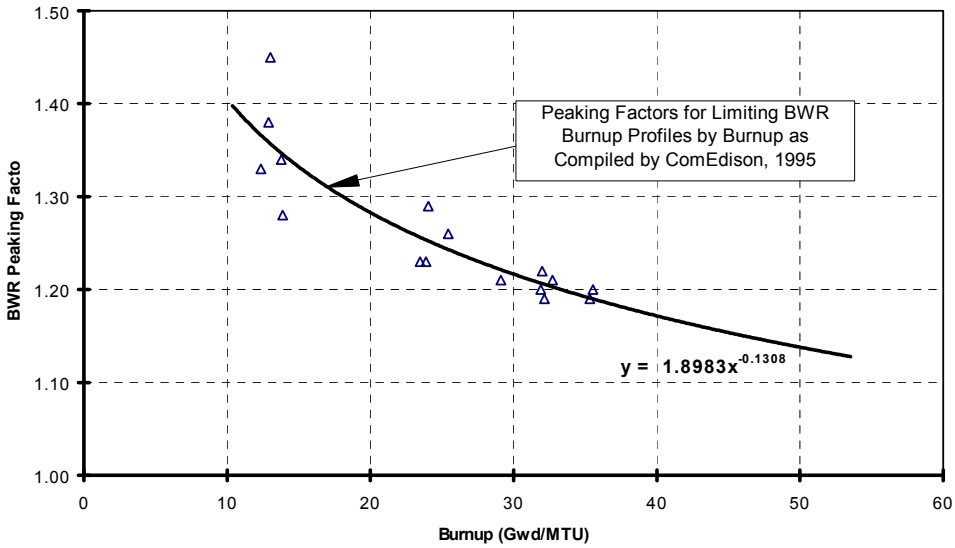

Figure 4.1-4 - Max. Peaking Factor vs. Burnup for BWR Fuel

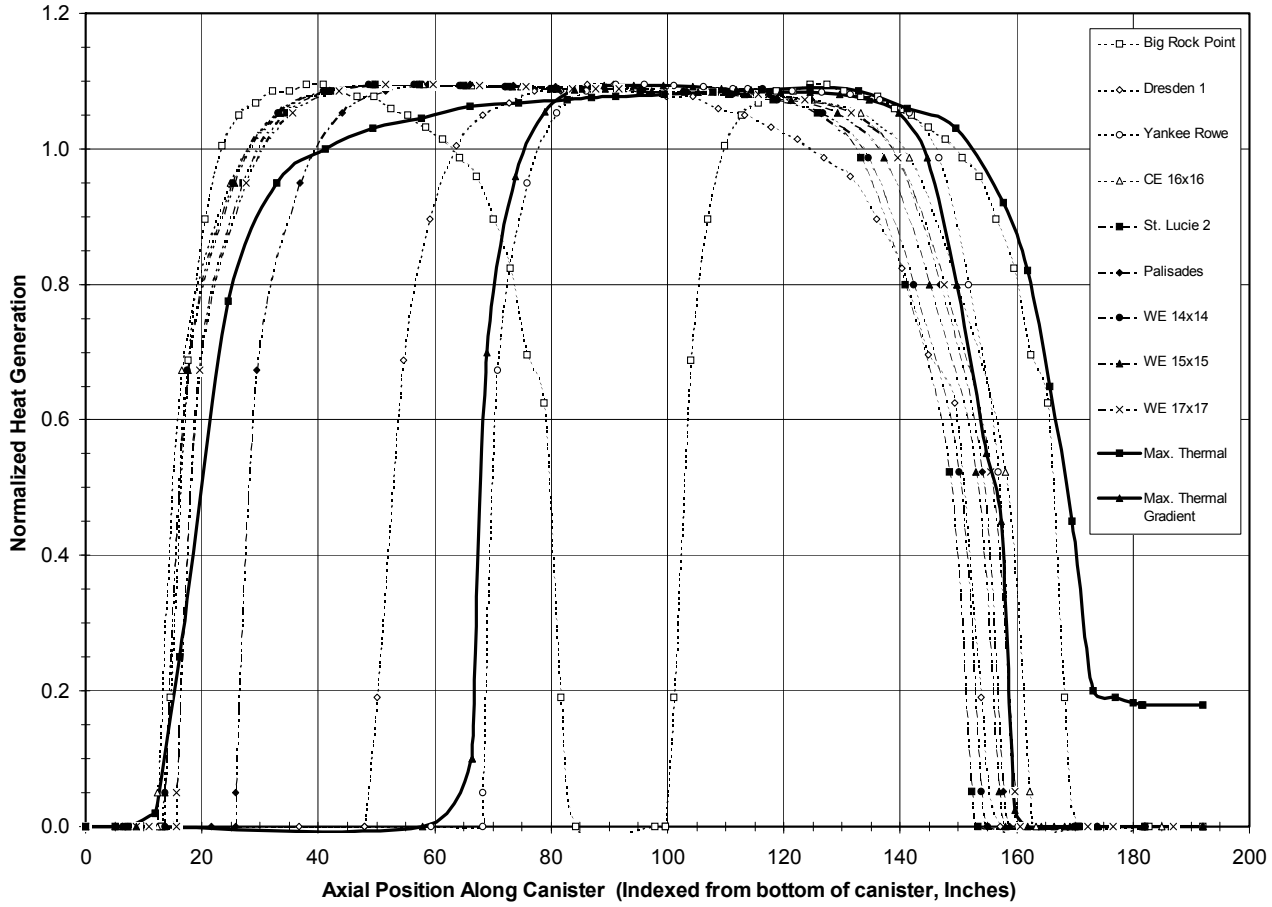

Figure 4.1-5 - Design Basis Canister Axial Heat Generation Profiles

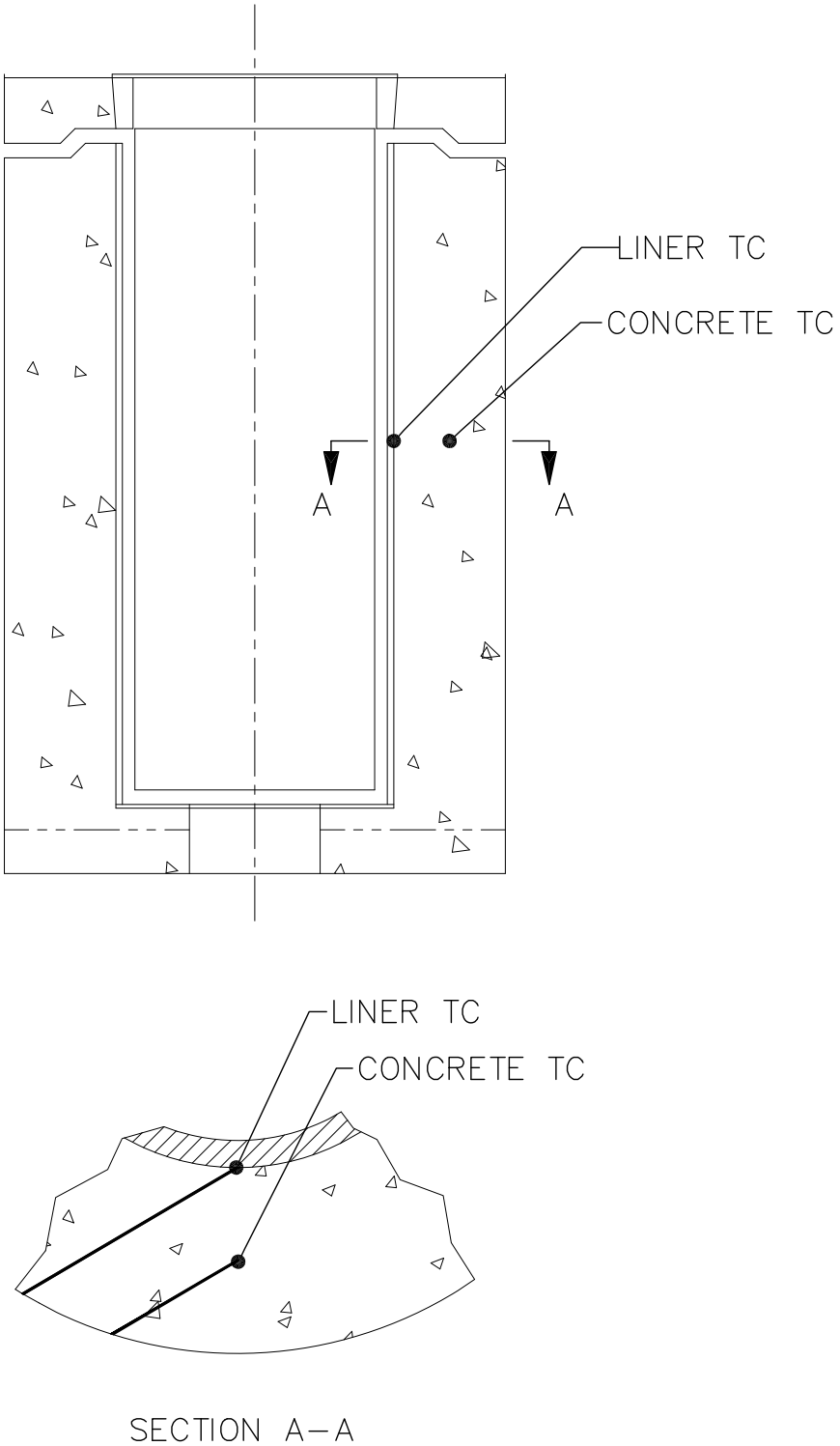

Figure 4.1-6 - Storage Cask Thermocouple Locations

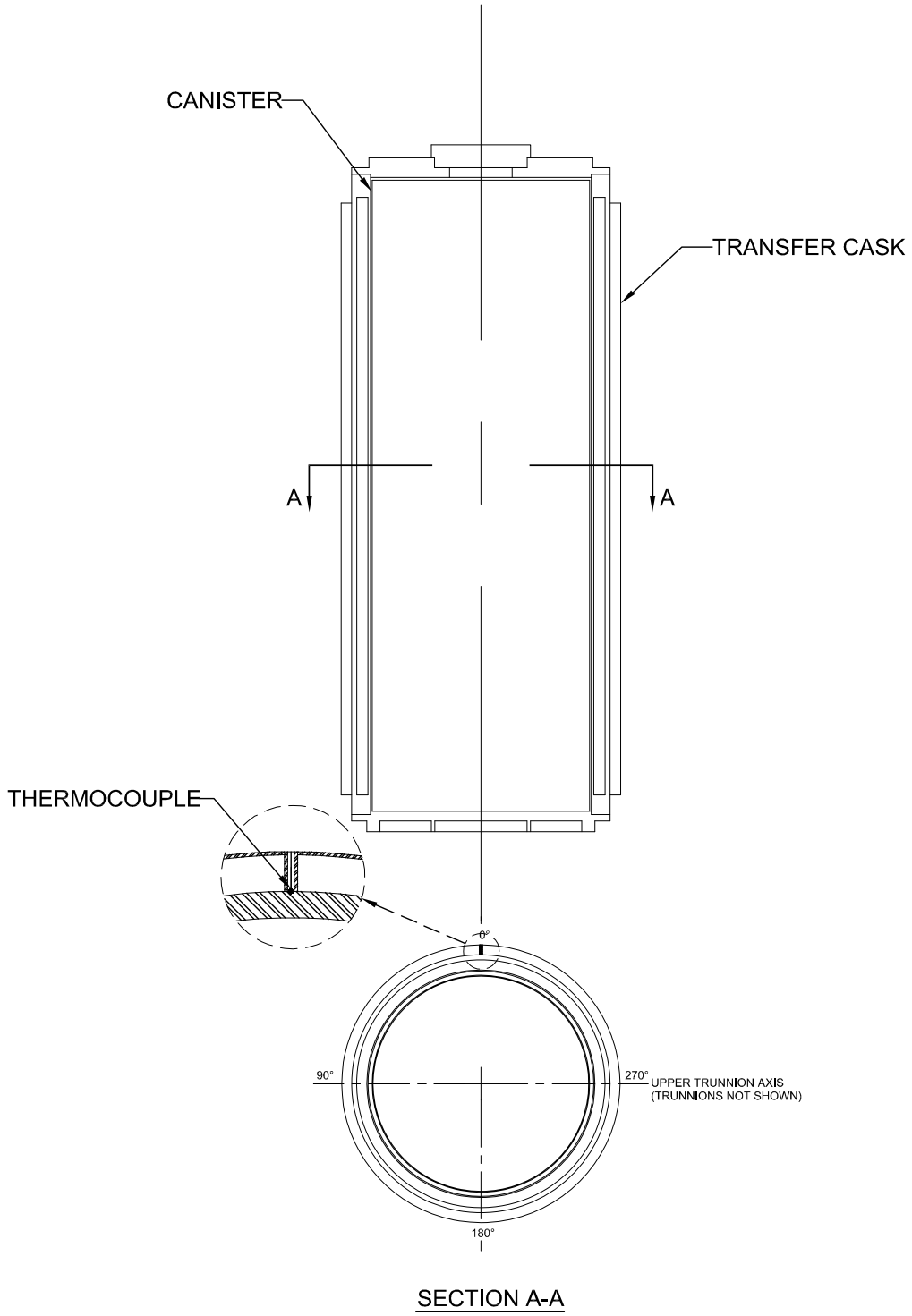

Figure 4.1-7 - Transfer Cask Thermocouple Location

This page intentionally left blank.

4.2 Summary of Thermal Properties of Materials

The thermal analysis of the FuelSolutions™ W150 Storage Cask and W100 Transfer Cask requires that thermal properties be defined for the materials of construction. Table 4.2-1 tabulates the applicable thermal properties for the homogenous materials used in the fabrication of the storage cask and transfer cask. Table 4.2-2 provides a summary of surface emissivities utilized for storage and transfer cask thermal analysis. Table 4.2-3 provides a summary of the fluid material properties used for storage and transfer cask thermal analysis.

Table 4.2-1 - Homogenous Material Properties (2 pages)

Material	Temperature (°F)	Thermal Conductivity (BTU/hr-ft-°F)	Density[1] (lb/ft^3)	Specific Heat (BTU/lb-°F)	Solar Absorptivity[1] (α)
Type 304/304L Stainless Steel [2]	-40	8.2[12]	503	0.111[12]	0.52[3], 0.25[11]
	70	8.6		0.113	
	100	8.7		0.114	
	200	9.3		0.119	
	300	9.8		0.122	
	400	10.4		0.125	
	500	10.9		0.127	
	600	11.3		0.129	
	700	11.8		0.131	
	800	12.2		0.132	
	900	12.7		0.134	
	1000	13.2		0.135	
	1100	13.6		0.137	
	1200	14.0		0.137	
	1400	14.9		0.140	
	1500	15.3		0.141	
Type SA-564 Grade 630 Stainless Steel (17-4 PH)[2]	-40	9.2[12]	487	0.101[12]	0.52[3]
	70	9.9		0.108	
	150	10.4		0.113	
	250	10.9		0.118	
	400	11.7		0.126	
	500	12.2		0.132	
	600	12.7		0.137	
	700	13.2		0.146	
	800	13.5		0.154	
	900	13.7		0.163	
	1000	13.8		0.177	
	1100	14.0		0.197	
	1200	14.2		0.226	
	1400	15.0		0.166	
	1500	15.4		0.157	

Table 4.2-1 - Homogenous Material Properties (2 pages)

Material	Temperature (°F)	Thermal Conductivity (BTU/hr-ft-°F)	Density[1] (lb/ft^3)	Specific Heat (BTU/lb-°F)	Solar Absorptivity[1] (α)
A-36	-40	22.9[12]	489	0.096[12]	0.7[4]
Carbon	70	23.6		0.106	
Steel[2]	200	24.4		0.118	
	300	24.4		0.123	
	400	24.2		0.128	
	500	23.7		0.133	
	600	23.1		0.136	
	700	22.4		0.143	
	800	21.7		0.149	
	900	20.9		0.156	
	1000	20.0		0.165	
GESC NS-3[5]		0.5	110	0.145	
RX-277[6]		0.3	105	0.220	
Lead[7]	-58	21.7	708	0.030	
	32	20.4		0.030	
	81	20.0			
	158	19.9		0.031	
	248			0.032	
	261	19.4			
	338			0.032	
	428	18.4		0.033	
	608			0.033	
	621	16.4			
	698			0.051	
	833	10.1			
Reinforced	100	1.2	144	0.250	0.7[3]
Concrete[8,9]	200	1.1			
	500	1.0			
	1000	0.8			

Table 4.2-1 Notes:

(1) Single values are shown for homogeneous material Density and Solar Absorptivity, since these material properties do vary significantly with temperature.

(2) ASME Boiler and Pressure Vessel Code, Section II, Part D, 1995 Edition.

(3) G. G. Gubareff, J. E. Janssen, and R. H. Torborg, *Thermal Radiation Properties Survey*, 2nd Edition, Honeywell Research Center, 1960.

(4) Storage cask carbon steel components coated with CarboZinc 11. Data obtained from CARBO ZINC® 11 Product Data Sheet.

(5) GESC NS-3, *Test Report NS-3-001*, NAC International.

(6) Bulletin S-73N, *Catalog No. 277 Shielding Technical Data*, Reactor Experiments Inc.

(7) Y.S. Touloukian, *Thermal Conductivity - Metallic Elements and Alloys*, Thermophysical Properties of Matter, the TPRC Data Series, Vol. 1, 1970.

(8) Neville, A.M., *Properties of Concrete*. 1963, John Wiley & Sons, New York.

(9) Fintel, M., *Handbook of Concrete Engineering*, 2nd Edition, 1974, Van Nostrand Reinhold Company, New York.

(10) F. P. Incropera and D. P. Dewitt, *Fundamentals of Heat and Mass Transfer*, 3rd Edition, John Wiley & Sons, New York, 1990.

(11) The outer surface of the transfer cask liquid neutron shield stainless steel jacket has a high emissivity, low absorptivity coating. Coating absorptivity value provided by: Gilmore, D.G., Editor, *Satellite Thermal Control Handbook*, The Aerospace Corporation Press, El Segundo, CA, 1994.

(12) Extrapolated data.

Table 4.2-2 - Surface Emissivities

Material	Conditions	Emissivity (ε)
304/304L Stainless Steel[1,2,6]	slightly oxidized (<250°F)	0.3
	slightly oxidized (250-500°F)	0.4
	coated	0.85
SA-36 Carbon Steel[4]	coated	0.78
Aluminum[1,5]	oxidized	0.25
	coated	0.88
Lead[1,3]	oxidized	0.6
Concrete[1]	uncolored, rough	0.9

Table 4.2-2 Notes:

(1) G. G. Gubareff, J. E. Janssen, and R. H. Torborg, *Thermal Radiation Properties Survey*, 2nd Edition, Honeywell Research Center, 1960.

(2) Frank, R. C., and W. L. Plagemann, *Emissivity Testing of Metal Specimens,* Boeing Analytical Engineering coordination sheet No. 2-3623-2-RF-C86-349, August 21, 1986.

(3) R. Siegel and J. R. Howell, *Thermal Radiation Heat Transfer*, 3rd Edition, Hemisphere Publishing Corporation, Washington, D. C., 1992.

(4) Storage cask carbon steel components coated with CarboZinc 11. Emissivity data obtained from R. Wright, D. Spencer, & F. Delose, *Reactor Passive Containment Cooling System Small Scale Containment Cooling Tests*, ANS/ASME Nuclear Energy Conference, San Diego, August 1992.

(5) Coated emissivity of 0.85 for the thermal shield inner surface is conservative for the storage cask thermal analysis.

(6) The outer surface of the transfer cask liquid neutron shield stainless steel jacket has a high emissivity, low absorptivity coating. Coating emissivity value provided by: Gilmore, D.G., Editor, *Satellite Thermal Control Handbook*, The Aerospace Corporation Press, El Segundo, CA, 1994.

Table 4.2-3 - Material Properties, Fluids

Material	Temp. (°F)	Thermal Conductivity (BTU/hr-ft-°F)	Specific Heat (BTU/lb-°F)	Density, (lb/ft^3)	Prandtl No.	Expansion Coefficient (1/K)	Viscosity, centipoise
Air[1,2,3]	-99	0.010	0.239	Use ideal gas law			0.01336
	81	0.015	0.240				0.01853
	261	0.019	0.242				0.02294
	441	0.023	0.246				0.02682
	621	0.026	0.251				0.03030
	801	0.030	0.257				0.03349
	981	0.033	0.262				0.03643
	1161		0.267				0.03918
	1341	0.039	0.272				0.04177
	1701		0.280				0.04650
Liquid Water[4]	32	0.329	1.007	62.44	12.99	-68.05E-6	1.750
	81	0.354	0.998	62.25	5.83	276.1E-6	0.855
	126	0.373	0.999	61.63	3.42	471.2E-6	0.528
	171	0.386	1.002	60.75	2.29	624.2E-6	0.365
	212	0.393	1.007	59.82	1.76	750.1E-6	0.279

Table 4.2-3 Notes:

(1) Rohsenow, Hartnett, and Ganic, *Handbook of Heat Transfer Fundamentals*, 2nd edition, McGraw-Hill Publishers.

(2) F. Kreith, *Principles of Heat Transfer*, 3rd Edition, Harper & Row Publishers.

(3) E. R.G. Eckert and R. M. Drake, JR., *Analysis of Heat and Mass Transfer*, McGraw-Hill Book Company, New York, 1972.

(4) F. P. Incropera and D. P. Dewitt, *Fundamentals of Heat and Mass Transfer*, 3rd Edition, John Wiley & Sons, New York, 1990.

4.3 Specifications for Components

4.3.1 Storage Cask

Of the two basic materials used to construct the FuelSolutions™ W150 Storage Cask (concrete and steel), concrete is the most temperature sensitive. Table 4.3-1 lists the maximum allowable temperatures specified by ACI 349,[9] which are: long-term average bulk temperature, 150°F; long-term local temperature, 200°F, and short-term surface temperature, 350°F, in accordance with Section 2.3. There is no minimum allowable concrete temperature during storage cask operation. The allowable concrete temperatures do not apply to the top cover concrete shield plug which is completely sealed in a carbon steel shell and does not perform a structural function.

The storage cask average bulk concrete temperature is determined by calculating the weighted average structural concrete temperatures throughout all three cask segments, from the base of the canister to the top of the outlet vents. The base section of the cask below the canister and the top cover shield plug concrete are not included in this average. Exclusion of the base section from the bulk average is conservative because the base section is cooler than the side wall. The top cover is excluded because it does not perform a structural function. The conservatively calculated bulk average temperature is compared with the allowable long-term bulk average temperature (150°F). There is no short-term average concrete allowable temperature. The allowable long-term local temperature (200°F) is conservatively applied at the hottest point on the liner/ concrete interface. For short-term off-normal and accident thermal conditions, the structural concrete "surface" is also defined as the liner/concrete interface. The resulting storage cask temperatures at this location for off-normal and accident thermal conditions are compared with the allowable short-term surface concrete temperature (350°F).

Both carbon and stainless steel exhibit material property variations within the operating range of the FuelSolutions™ storage cask. The maximum allowable operating temperatures of carbon and stainless steel used for structural purposes is 700°F and 800°F, respectively. These values are very conservative since these materials maintain strength well above these temperatures and both carbon and stainless steel have a melting point above 2500°F (1371°C).[10] These allowable material temperatures are consistent with the ASME B&PV Code,[11] although the storage cask is not designed or fabricated to the ASME Code.

Short-term elevated temperatures in excess of long-term allowable values may occur during fabrication, canister loading operations, off-normal canister transfer, or accident storage conditions in which a postulated cask drop accident is not credible or need not be combined with another accident condition. As shown in ASME Code Case N-47-33,[12] the strength properties of austenitic stainless steels do not change due to short-term exposure up to 1,000°F. Therefore,

---

[9] ACI 349, ACI Manual of Concrete Practice, Part 4, 1995.

[10] ASME Boiler and Pressure Vessel Code, Section II, Part D, 1995 Edition.

[11] ASME Boiler and Pressure Vessel Code, Section III, Division 1 - Subsection ND, 1995 Edition.

[12] Case N-47-33, *Class 1 Components in Elevated Temperature Service*, American Society of Mechanical Engineers (ASME) Boiler and Pressure Vessel Code, 1995 Code Cases, Nuclear Components, 1995 Edition.

short-term exposure to the temperatures of this magnitude does not have any significant effect on mechanical properties of the storage cask stainless steel materials. Additionally United States Steel brochure "Steels for Elevated Temperature Service"[13] provides tested material properties for carbon steels up to 1900°F without any significant effect on mechanical properties. Therefore, a maximum allowable short-term temperature of 1000°F is applied for storage cask structural stainless steel and carbon steel materials.

Since certain storage cask steel components (i.e., liners, top cover plate, tie-rods) are fabricated from material which may be susceptible to brittle fracture, the fracture toughness of these materials is verified during fabrication, as discussed in Section 3.1.2.1.2. This assures that the storage cask components will perform their intended safety functions for the design basis normal, off-normal and postulated accident conditions at the applicable normal cold temperature (0°F) and the off-normal cold temperature, -40°F. As a result, there is no minimum allowable temperature for storage cask steel components.

Although the aluminum used for the thermal shields has a melting temperature of 1100°F, the allowable temperature of the thermal shields under all normal, off-normal, and postulated accident conditions is limited to 600°F by the coating on the inner surface.

Although one of the storage cask thermocouples is installed in the middle of the concrete wall, the thermocouple does not directly measure average concrete temperature, which is determined analytically as a weighted average of all structural concrete within the wall and bottom sections. The thermocouple located at the liner/concrete interface may be monitored periodically, as discussed in the *technical specification* contained in Section 12.3 of each canister FSAR. Periodic monitoring will help assure that the maximum short-term allowable concrete temperature (350°F) is not exceeded.

4.3.2 Transfer Cask

The components of the transfer cask that are considered temperature sensitive are the lead used for gamma shielding, the liquid neutron shield, the bottom cover rubber O-rings, and the solid neutron shield material. Table 4.3-2 lists the allowable temperatures for these materials.

The maximum allowable lead temperature for normal, off-normal, and postulated accident conditions is the melting point (620°F).[14]

The allowable temperature of liquid neutron shield water is established to prevent over-pressurization of the liquid neutron shield outer shell due to boiling. The transfer cask outer shell is equipped with a pressure relief device, set at 45 psig, to provide over-pressure protection. With water in the liquid neutron shield, the pressure relief device effectively maintains the liquid neutron shield material temperature to a saturation temperature of 293°F.

The liquid neutron shield should also be kept from freezing during operations at low temperatures. In order to prevent freezing, a minimum allowable average liquid neutron shield

---

[13] "Steels for Elevated Temperature Service," United States Steel Corporation, 600 Grant Street, Pittsburgh, PA 15230.

[14] Avallone, E.A, and Baumeister III, T., *Mark's Standard Handbook for Mechanical Engineers*, 9th Edition, McGraw-Hill Book Company, NY, 1987.

temperature of 32°F is applied. The transfer cask thermocouple is monitored during canister transfer operations as discussed in the *technical specification* contained in Section 12.3 of this FSAR, using a temperature based on correlation of the average liquid neutron shield temperature to the thermocouple reading.

The allowable temperature for the stainless steel neutron shield jacket is limited by the temperature endurance limit of the exterior coating. The neutron shield jacket coating is required to have a long-term temperature limit of 325°F, compared to the 800°F long-term temperature limit for the stainless steel jacket material.

RX-277, used in the top and bottom covers of the transfer cask, is a castable solid material similar in nature to cement. In this application, it is a non-load bearing material, and is used for its neutron shielding properties only. The RX-277 material behaves similar to NS-3 (discussed below) with respect to off-gassing of water vapor at high temperatures. The RX-277 material has an allowable peak temperature of 350°F.[3] Although NS-3 may be substituted for RX-277 as shielding material, RX-277 material is assumed for all transfer cask analysis since RX-277 thermal properties bound those of NS-3 and the same allowable temperature applies for both materials.

The NS-3 solid neutron shielding material may be utilized as an acceptable alternative to the RX-277 material. The base NS-3 material responds to heat input in a manner very similar to that of concrete, remaining a non-combustible solid, even when subjected to temperatures as high as 1300°F (704°C). NS-3 experiences a weight loss through off-gassing of water vapor when exposed to elevated temperatures. From manufacturer's test data[15] in an open (non-sealed) system, the NS-3 material is shown to experience a weight loss of 4.16% (in the form of water vapor) after two hours at a constant temperature of 340ºF. The effect is significantly reduced at lower temperatures, with a weight loss of 2.15% after 100 hours at 150°F. By sealing in a closed system (top cover, bottom cover, ram access cover) the water vapor is reabsorbed into the NS-3 matrix after cooling. As such, no reduction in shielding or thermal properties is required in the analyses. There is no minimum allowable temperature for NS-3.

Stainless steel exhibits material property variations within the operating range of the FuelSolutions™ transfer cask. The maximum allowable operating temperature of stainless steel used for structural purposes is 800°F. This value is very conservative since this material maintains its strength well above this temperature and has a melting point above 2500°F. The structural steel components of the transfer cask are maintained at temperatures below 800°F (427°C), consistent with Section III of the ASME B&PV Code. Since transfer cask steel materials are not susceptible to brittle fracture, there is no minimum allowable material temperature.

Short-term elevated stainless steel temperatures in excess of the long-term allowable value may occur during fabrication, canister loading operations, off-normal canister transfer, or accident storage conditions in which a postulated cask drop accident is not credible or need not be combined with another accident condition. As discussed in Section 4.3.1, a maximum allowable

[15] Technical Report No. NS-3-033, "Determination of Weight Loss and Off-gassing of NS-3 and R-1528 After Heat Aging," Bisco Products, Inc., June 26, 1989.

short-term temperature of 1000°F is applied for storage cask structural stainless steel and carbon steel materials.

Table 4.3-1 - Storage Cask Allowable Material Temperatures

Material	Max. Average Temperature (°F)	Max. Local Temperature (°F)	Max. Short-term Temperature (°F)
Structural Concrete	150	200	350
Structural Carbon Steel	700	700	1000
Structural Stainless Steel	800	800	1000
Thermal Shield(1)	600	600	600

Table 4.3-1 Notes:

(1) Allowable temperature of the thermal shield is limited by the inner surface coating.

Table 4.3-2 - Transfer Cask Allowable Material Temperatures

Material	Max. Average Temperature (°F)	Max. Local Temperature (°F)	Max. Short-term Temperature (°F)	Min. Average Temperature (°F)
Lead Shielding	620	620	620	n/a
Liquid Neutron Shielding	293	n/a	n/a	32
NS-3/ RX-277 Solid Neutron Shielding	n/a	350	n/a	n/a
Rubber O-rings(1)	250	250	250	n/a
Structural Stainless Steel	800	800	1000	n/a
Neutron Shield Jacket(2)	325	325	325	n/a

Table 4.3-2 Notes:

(1) The O-ring temperature limit is based on the maximum steady state temperature rating for Butyl rubber. Seal integrity is only required operationally when the transfer cask annulus is filled with water.

(2) The stainless steel neutron shield jacket temperature is limited by the high emissivity coating.

This page intentionally left blank.

4.4 Thermal Evaluation for Normal Conditions of Storage

This section provides a discussion of the thermal analysis methodology and results for the FuelSolutions™ W150 Storage Cask and the FuelSolutions™ W100 Transfer Cask. The applicable cask thermal ratings, temperature distributions, and thermal performance are evaluated to verify that the cask meets the design requirements defined in Chapter 2 of this FSAR and will perform their intended functions under normal, off-normal, and accident conditions. Design basis off-normal and postulated accident conditions are further summarized in Section 11.1 and 11.2 of this FSAR. The thermal evaluations of the storage cask and transfer cask are performed using conservative analytical techniques. Cask allowable temperatures are established to assure that all cask materials are maintained within their applicable minimum and maximum allowable temperatures during all modes of operation. Thermal analysis under steady-state normal hot storage conditions and transient analyses of some off-normal and accident scenarios are performed to support the operational *technical specifications* for the storage cask and transfer cask contained in Chapter 12 of this FSAR and the canister storage FSARs.

4.4.1 Storage Cask

To validate the performance of the FuelSolutions™ W150 Storage Cask under normal conditions of storage, the storage cask is evaluated for the design basis normal climatic conditions concurrently with the bounding canister heat flux profiles developed in Section 4.1.3. The analysis presented herein establishes the thermal ratings such that the storage cask allowable material temperatures are not exceeded when heat loads at the cask thermal ratings are applied concurrently with the ambient conditions which envelop those at all sites within the contiguous United States. Storage cask temperatures for major components of interest are determined for the applicable design basis load cases shown in Table 4.1-3.

This section presents the thermal analysis of the FuelSolutions™ W150 Storage Cask only. The storage cask thermal model described in this section is also utilized for the thermal analysis of FuelSolutions™ canisters. The thermal evaluation of each FuelSolutions™ canister and the corresponding spent fuel cladding is provided in Chapter 4 of the respective FuelSolutions™ Canister Storage FSAR. Additionally, since the storage cask cannot be pressurized, an internal pressure analysis is not performed for the storage cask. The design basis internal pressures for the FuelSolutions™ canisters are developed in Chapter 4 of the respective FuelSolutions™ Canister Storage FSAR.

The storage casks are designed to be stored in multiple cask arrays on the ISFSI pad as described in Section 1.4. A minimum cask spacing of 15 feet center-to-center is established to provide for adequate ventilation flow and to provide access for handling, monitoring, and maintenance. This minimum spacing is consistent with that previously utilized and approved by the NRC for other similar canister based vertical storage cask dry storage systems. The storage casks are designed to be stored in multiple cask arrays on the ISFSI pad as described in Section 1.4.

The thermal evaluation for the storage cask system considered a range of possible cask arrangements, from a lone, isolated cask, to a cask completely surrounded by neighboring casks at the minimum 15 foot center-to-center spacing in accordance with the *technical specification* contained in Section 12.3 of this FSAR. The effect on the thermal performance of the cask due to its potential placement in this type of arrangement has been evaluated to account for the potential

blocking of the cask's view to the ambient and any associated shading of the solar insolation received on its surface. In addition, the minimum cask spacing has been evaluated to assure that the limiting cask in the array will experience no degradation in thermal performance due to either a reduction in the flow of ambient air nor or an increase in its effective temperature.

The affect on surface view factors was evaluated for various sections of the cask. In a stand-alone arrangement, the view factor for all cask surfaces is 1.0. Within an array of casks, the impact on the view factor varies depending on the position on the cask. The cask lid continues to have a view factor of 1.0 given its orientation and shape (i.e., flat). The cask side walls experience an increasing level of view factor degradation from the top to the bottom. Array affects also cause a corresponding degradation on solar insolation because the majority of the insolation is received in direct line of sight with the sun, while the heat transferred from the cask side wall via radiation to the ambient is a diffuse process.

The impact on convection heat transfer due to placement in an array of casks is negligible since the bulk (i.e. 90% +) of the heat removed from the canisters is via the airflow through the cask annulus. Since this airflow is expelled at the top of the cask and since buoyancy effects will cause the flow to continue upward into the ambient once it leaves the cask, no real heating of the air around the cask occurs. Also, given that the minimum separation distance between the casks in an array is 3.5 feet, no mixing of the convection boundary layers occurs between adjacent casks.

Evaluation of the storage cask performance in both a stand-alone and an array showed that the maximum cask temperatures are nearly equal. This result is directly related to the following: 1) since the majority of the heat is removed via internal convection, the potential impact on cask performance due to view factor degradation is minimal, 2) of the heat not removed by internal convection, the bulk (about 80%) is transferred to the ambient via external convection and not radiation, and 3) adjacent casks provide self shading, thus reducing the total insolation on any one cask from approximately 10.8 kW for a stand-alone cask to 5.8 kW.

Given that the typical FuelSolutions™ storage system installation involves multiple casks, the heat transfer analysis for the storage cask performance under normal, off-normal, and accident conditions is based on the view factors for a cask in an array.

4.4.1.1 Thermal Model

SINDA/FLUINT®[2] finite difference, or lumped parameter, models are used to evaluate the temperature distribution in the FuelSolutions™ W150 Storage Cask. A description of the SINDA/FLUINT® code and suitability for this analysis is included in Section 4.7.1. The SINDA/FLUINT® code provides the capability to simulate steady-state and transient temperatures using temperature dependent material properties and heat transfer via conduction, convection, and radiation. Complex algorithms may be programmed into the solution process for the purposes of computing the various heat transfer coefficients as a function of the local geometry, gas thermal properties, and temperatures or, for example, to estimate the effects of buoyancy-driven heat transfer. Thermal properties utilized in the storage cask thermal modeling are specific to the materials and temperature dependent where applicable (see Section 4.2).

A major feature of the SINDA/FLUINT® code utilized for this modeling is the ability to use submodels to represent common geometry sections of the cask and then to connect the individual

submodels to form a complete model of the assembled cask. The W150 Storage Cask thermal model is illustrated in Figure 4.4-1. As shown, the storage cask model is divided into four (4) separate submodels: 1) top section (CASKLID), 2) the side wall section (SIDE), 3) the bottom section (BASE), and 4) canister (CAN). The top section includes the top cover assembly, shield ring, and the outer concrete wall above the canister and the air outlet vents. The side wall section includes the thermal shield, dual air annulus, liner and concrete wall. The bottom section includes the canister support tubes, bottom plate, air inlet vents, and the concrete below the canister. The canister submodel includes only the canister shell, which establishes boundary conditions for the storage cask model. Flow arrows indicate the natural convection air flow path through the storage cask.

A thermal resistance circuit is constructed for each storage cask submodel and a corresponding SINDA model is constructed to solve for the temperature distributions. Illustrations of the thermal submodels, including the thermal resistance circuits, are presented in Figure 4.4-2, Figure 4.4-4, and Figure 4.4-5 for the side wall section, top section, and bottom section, respectively. Figure 4.4-3 presents more detailed node locations for the corresponding SIDE model sections designated in Figure 4.4-2. Each submodel is discussed further in the paragraphs that follow.

The same thermal model is used for all steady-state vertical normal and off-normal ambient conditions. The storage cask thermal model utilized for analysis in the horizontal orientation differs slightly from that for storage cask vertical orientation. Since the horizontal orientation applies only during horizontal canister transfer, which is performed over a short duration, this is considered an off-normal condition for which short-term allowable material temperatures apply. The storage cask horizontal model is discussed in Section 4.5.

4.4.1.1.1 Air Flow

Natural convection air enters the system horizontally through the four inlet vents and channels located at the bottom of the storage cask, converges vertically into the central inlet plenum, flows upward into the storage cask cavity, flows radially outward under the canister and through/between the canister support tubes, flows upward through the dual annuli formed by the cask liner, thermal shield, and canister shell, and finally flows outward to ambient through the outlet vents at the top of the cask. The air is continuously heated while flowing through the cask, forming a natural circulation loop. The buoyancy force and the pressure drop incurred in the flow passages are the determining factors for the air flow rate. A simple conservation of momentum equation applies:

$$\int (\rho_\infty - \rho_{flow}) g dx = \sum 0.5 \rho v^2 \cdot (K + \frac{fL}{D_H})$$

where:

K = form loss coefficient

D_H = hydraulic diameter

ρ_∞ = ambient air density

ρ_{flow} = average convective air density

ρ = flow segment air density

g = gravitational constant

x = axial distance increment

v = air flow velocity

f = friction coefficient

L = flow segment length.

The term on the left-hand side is the total buoyancy force and the term on the right-hand side is the total pressure drop in the system. Each side of the conservation of momentum equation can be rewritten in algebraic form by substituting the storage cask thermal parameters as follows:

$$F_B = 0.5K_{inlet}\frac{\dot{m}_{total}^2}{\rho_{inlet}(A_1 + A_2)^2} + 0.5K_{outlet}\frac{\dot{m}_{total}^2}{\rho_{outlet}(A_1 + A_2)^2} + \Delta P_{gap}$$

$$F_B = (\rho_\infty - \overline{\rho}_1)gL - gL_{exit}(\rho_\infty - \rho_{exit})$$

where:

F_B = buoyancy force

K_{inlet} = inlet form losses

K_{outlet} = outlet form losses

$\dot{m}_{total}$ = total air mass flow rate

ρ_{inlet} = inlet air density

ρ_{outlet} = outlet air density

ρ_∞ = ambient air density

A_1 = inner annulus flow area

A_2 = outer annulus flow area

ΔP_{gap} = annulus differential pressure

$\overline{\rho}_1$ = inner annulus average air density

ρ_{exit} = inner annulus exit air density

L = annulus height

L_{exit} = outlet elevation drop

Inlet and outlet form losses are determined based on the storage cask design features, geometry, and flow path configuration within each inlet and outlet flow segment. The inlet and outlet loss coefficients are normalized to the annulus flow area for consistency within the system form loss equation.

The density of the air in the flow passages depends on its temperature, which depends on the amount of heat transferred from the canister wall to the air stream. The amount of heat

transferred from the canister wall is dependent on the air flow rate in the storage cask passages. In order to determine the total air mass flow rate, the conservation of momentum equation is solved by SINDA through iteration. When the storage cask achieves steady-state thermal conditions, the natural convection air buoyancy force equals the system pressure drop.

4.4.1.1.2 Side Wall Section

The side wall submodel, shown in Figure 4.4-2, includes the section of the storage cask from the elevation of the canister end to the elevation of the outlet vents. Although the storage cask side wall is constructed of three segments, the cask wall is modeled as a composite section. The individual segment weights, grout between segment shear keys, and tie rod tension effectively eliminate any thermal contact resistance between adjacent segments.

The side wall section is a two-dimensional axisymmetric model. The two canister guide rails and six support rails are placed evenly around the periphery of the storage cask. The eight canister guide rails and the eight full length tie rods are not explicitly modeled.

For storage cask thermal modeling purposes, the SNF decay heat is assumed to originate in the canister shell assembly. The side wall section model length is variable to allow evaluation of both the long (192") and short (182") FuelSolutions™ canister shell designs, as well as the corresponding tall and short storage cask designs. The canister shell rejects heat to the air in the inner annulus gap via convection, and the heat shield via radiation. The air flow on both sides of the heat shield exchanges heat with the heat shield by means of convection using the inner annular gap air mass flow rate calculated in the air flow analysis. The heat shield also exchanges heat with the liner surface via radiation. Air in the outer annular gap exchanges heat with the liner via convection using the outer gap mass flow rate from the air flow analysis. Conduction heat transfer takes place in the liner and the concrete wall. At the concrete exterior surface, in addition to the insolation heat load at the surface under applicable conditions, the concrete exchanges heat with the ambient air via natural convection. The concrete exterior surface also transfers heat to the ambient air via radiation.

Figure 4.4-2 also schematically shows the thermal circuit for the storage cask for heat transfer in the radial direction. The axial conduction in the liner and the concrete is not shown here for the purpose of clarity, but is included in the thermal model. Axial conduction in the heat shield is negligible because of its small thickness relative to the length of the conduction path.

The thermal resistances are defined as follows:

R_1 = convection resistance from the canister shell to the air in the inner annulus

R_2 = convection resistance from the heat shield to the air in the inner annulus

R_3 = radiation resistance from the canister shell to the heat shield

R_4 = convection resistance from the heat shield to the air in the outer annulus

R_5 = convection resistance from the liner to the air in the outer annulus

R_6 = radiation resistance between the heat shield and the liner

R_7 = conduction resistance across the liner

R_8 = conduction resistance across the concrete

R_9 = convection resistance from the concrete exterior surface to the ambient

R_{10} = radiation resistance between the concrete exterior surface and the ambient

For the purpose of determining conservative concrete temperatures, the contact resistance between the liner and the concrete is assumed to be zero.

Convection

For convection heat transfer, Newton's law of cooling[16] is applied:

$$q = Ah(T_1 - T_2)$$

where q is the heat transfer rate, A is the heat transfer area, h is the heat transfer coefficient, and T_1 and T_2 are the temperature of the surface and fluid, respectively.

The annular gap convection heat transfer coefficients are determined as follows:[16]

$$h = \frac{Nu \cdot k}{L}$$

where:

Nu = Nusselt number

k = fluid thermal conductivity

L = characteristic length

Various flow conditions within the annular gap are considered since the Nusselt number correlations change significantly between flow regimes. For laminar mixed buoyancy and forced convection flows, the following Nusselt correlation is used.[17]

$$Nu = (8.235^4 + 3.1605\Gamma)^{0.25}$$

where:

Γ = Ra*/Gz,

Gz = Re Pr D_H/L,

Ra* = Gr Pr Nu D_H/L

Gr = Grashof number

Pr = Prandtl number

Re = Reynolds number (Re ≤ 2300)

D_H = hydraulic diameter

L = characteristic length

[16] Incropera, F.P. and Dewitt, D.P., *Fundamentals of Heat and Mass Transfer*, 3rd Edition, John Wiley & Sons, New York, 1990.

[17] S. Ostrach, *Combined Natural- and Forced-Convection Laminar Flow and Heat Transfer of Fluids With and Without Heat Sources in Channels With Linearly Varying Wall Temperatures*, NACA TN 3141, 1954.

For turbulent forced flow in a channel, the Nusselt number is given by:[18]

$$Nu_{force} = 0.023\, Re^{0.8}\, Pr^{0.4}$$

For turbulent flow with significant natural convection effects, the following correlation is used:[18]

$$Nu = 15\left(\frac{Gr}{Re^{2.7}}\right)^{0.4} \cdot Nu_{force}$$

In order to use the proper Nusselt correlation for given flow regime, the largest Nusselt number calculated for the laminar flow, turbulent forced convection, and turbulent natural convection correlations is applied to determine the annular gap heat transfer coefficient.

For convection at the exterior surface of the storage cask, only natural convection exists. The heat transfer coefficient at the side wall is evaluated using the correlations for a vertical plate as follows:

$$h = 0.729 \cdot (T_w - T_{amb})^{1/3} \qquad \text{for } Gr > 10^9$$

$$h = 0.787 \cdot \left[\frac{(T_w - T_{amb})}{L}\right]^{0.25} \qquad \text{for } Gr < 10^9$$

where:

h	=	heat transfer coefficient
T_w	=	cask wall temperature
T_{amb}	=	ambient temperature
L	=	is the length of the canister

Conduction

For axial conduction heat transfer, the heat transfer rate is given by Fourier's Law:[16]

$$q = \frac{Ak}{l}(T_1 - T_2)$$

where k is the thermal conductivity and l is the length of the conduction path. For conduction in the radial direction across the liner and concrete wall, Fourier's Law can be re-written as:[16]

$$q = \frac{2\pi \cdot kL}{\ln(D_2 / D_1)}(T_1 - T_2)$$

where L is the length of the slab, and D_1 and D_2 are the inner diameter and outer diameter, respectively.

[18] Aung, W., *Mixed Convection in Internal Flows*, in Handbook of Single-Phase Convection Heat Transfer, Edited by S. Kakac, R.K. Shah, and W. Aung, John Wiley and Sons, New York, 1987.

Radiation

For the radiation mode of heat transfer between two surfaces, the heat transfer rate is given by:[16]

$$q = \frac{\sigma A_1 (T_1^4 - T_2^4)}{\frac{1-\varepsilon_1}{\varepsilon_1} + \frac{1}{F_{12}} + \frac{(1-\varepsilon_2)A_1}{\varepsilon_2 A_2}}$$

where:

A_1	=	source heat transfer surface area
A_2	=	target heat transfer surface area
F_{12}	=	view factor from A_1 to A_2,
ε_1	=	surface emissivity for A_1
ε_2	=	surface emissivity for A_2
σ	=	Stefan-Boltzmann constant

For radiation heat transfer between the concrete exterior surface and the surrounding, the surrounding is assumed at the ambient air temperature, and the area of the surrounding is assumed to be infinite. For radiation heat transfer between the canister shell and the heat shield, and between the heat shield and the liner, a view factor of one is assumed based on A_1, the inner surface. Such an assumption is reasonable since the gap width is much smaller than the length of each axial interval.

The base storage cask design, described in Chapter 1 of this FSAR, includes aluminum thermal shields, which are coated on the inner surface. This results in an emissivity of 0.85 on the inner surface and 0.25 on the outer surface (see Table 4.2-2).

A total of 22 axial node positions and 11 radial node positions are defined for the SINDA side wall submodel. Each node is placed in the center of a discrete volume of material. The node length and its center axial location are listed in Table 4.4-1 for the canister shell nodes. The zero elevation position is the bottom surface of the canister. Node radial positions for the SINDA side wall and canister submodels are shown in Figure 4.4-2 and the corresponding Section A-A in Figure 4.4-3. These radial and circumferential positions are repeated for each axial location presented in Table 4.4-1 in order to build the storage cask side wall and canister submodels. Additionally, two axial layers at the top and bottom elevations on the air outlet ducts are as shown in Section B-B and Section C-C, respectively, in Figure 4.4-3. Each node is assigned an initial temperature and thermal capacitance. The thermal capacitance is based on the mass of the node and the specific heat of the material. As a boundary condition for storage cask thermal analysis, the entire canister thermal mass is assumed to be concentrated on the canister shell.

4.4.1.1.3 Top Section

The storage cask top section submodel, shown in Figure 4.4-4, which includes the storage cask top cover plate, concrete shield plug, adjacent shield ring, and concrete wall section above the canister elevation. The storage cask top cover consists of a carbon steel plate with a thick concrete shield plug underneath. The shield plug is encased in a carbon steel shell. The top cover

is bolted to a carbon steel shield ring. Also modeled in the top section model is the concrete surrounding the shield ring. This portion of concrete connects to the concrete in the side submodel via conduction.

Heat from the canister top surface is transferred to the top cover shield plug shell via convection across the air gap and radiation. The top cover upper surface and the adjacent concrete exchange heat with the ambient via both convection and conduction. Figure 4.4-4 shows the thermal resistance for the top section. The thermal resistances are defined as:

R_1 = radiation resistance between the top cover plate and the ambient

R_2 = convection resistance from top cover plate to the ambient

R_3 = conduction resistance from the shield plug mid elevation to the top cover plate

R_4 = conduction resistance from the shield plug mid elevation to the shield plug shell

R_5 = radiation resistance from the canister to the shield plug shell

R_6 = convection resistance between the canister and the shield plug shell

R_7 = radial conduction resistance in the shield plug shell

R_8 = radial conduction resistance from shield plug to the shield ring

R_9 = conduction resistance across the shield ring

R_{10} = radial conduction resistance from the shield ring to the concrete wall mid point

R_{11} = radiation resistance between the concrete upper surface and the ambient

R_{12} = convection resistance between the concrete upper surface and the ambient

R_{13} = conduction resistance between the center of the concrete to the concrete top surface

R_{14} = conduction resistance between the center of the concrete wall to the interface with the side wall submodel

The radiation heat transfer and convection heat transfer to the ambient directly from the shield ring are ignored for conservatism. In addition, the convective heat transfer from the side surface of the side concrete is neglected. The model also conservatively neglects the axial conduction across the steel shell around the concrete shield plug.

The methodology presented in section 4.4.1.1.2 for the side wall submodel is also implemented for the top submodel. For natural convection between the top cover upper surface and ambient, the convection heat transfer coefficient is obtained by:[16]

$$\mathrm{Nu} = \frac{\mathrm{hD}}{\mathrm{k}} = 0.54\mathrm{Ra}_{\mathrm{D}}^{0.25} \qquad (10^4 < Ra_{\mathrm{D}} < 10^7)$$

$$\mathrm{Nu} = \frac{\mathrm{hD}}{\mathrm{k}} = 0.15\mathrm{Ra}_{\mathrm{D}}^{1/3} \qquad (10^7 < Ra_{\mathrm{D}} < 10^{11})$$

where Ra_{D} is the Rayleigh number based on the lid diameter ($=Gr_{\mathrm{D}} * Pr$), h is the convective heat transfer coefficient, D is the cover diameter, and k is the air thermal conductivity.

Since the canister top surface is at the same elevation as the cask outlet vents, it is assumed that this air does not exchange heat or mass with the air in the side wall annular gap. Since the gap between the top of the canister and the bottom of the storage cask top cover is small and above the level of the cask outlet vents, significant convective heat transfer from the top gap to the side wall annulus air is not expected. The heat transfer coefficient for natural convection occurring in this horizontal cavity is evaluated as follows:[16]

$$\mathrm{Nu}_s = \frac{hs}{k} = 0.069\mathrm{Ra}_s^{1/3}\,\mathrm{Pr}^{0.074} \qquad \text{for } 3 \times 10^5 < Ra_s < 7 \times 10^9$$

where s is the gap width, and *Ra* is the Rayleigh number evaluated using the air properties at film temperature. For a smaller *Ra*, the Nusselt number is consider to be unity, indicating that convection heat transfer between the canister top surface and the top cover assembly is due exclusively to conduction across the air gap.

For radiation heat transfer, a view factor of one is assumed between the storage cask top cover assembly and the canister top surface since the lid diameter is much larger than the gap width. For radiation heat transfer between the top cover plate and the ambient air, the surrounding area is assumed to be infinite and at the ambient air temperature.

The node locations for the SINDA top section submodel are shown in Figure 4.4-4. Similar to the side wall submodel, each node is placed at the center of a discrete volume of material. Top section submodel node locations are summarized in Table 4.4-2. Each node is assigned an initial temperature and thermal capacitance based on the mass of the node and the specific heat of the material.

4.4.1.1.4 Bottom Section

The storage cask bottom section submodel is shown in Figure 4.4-5, and consists of the storage cask components below the canister. Included in the submodel are the concrete base, a carbon steel bottom plate, and the center inlet plenum. The bottom section is connected to the side submodel as shown in Figure 4.4-1. Four horizontal air inlet channels on the bottom of the concrete section allow air flow from ambient to the center inlet plenum. Sixteen stainless steel canister support tubes are arranged radially on the bottom plate to support the canister with the cask vertical. The thermal resistances between the tube top surface and the canister bottom end, and between the tube bottom surface and the cask bottom plate are negligible. Heat is transferred from the canister bottom surface to the bottom plate via conduction through the support tubes and radiation. The air flow in the gap between the canister bottom surface and the cask bottom plate exchanges via convection. The bottom of the side wall submodel is connected to the bottom section submodel outer concrete wall via conduction.

Figure 4.4-5 shows the thermal resistance circuit for the storage cask bottom section submodel. In this model, the bottom section is divided into two sections, the portion underneath the canister and the portion underneath the storage cask side wall. A two-dimensional model is constructed to represent the heat transfer in the concrete. The air at the inlet channels exchanges heat with the channel walls, which are at different temperatures. To simplify the calculation, the average channel wall temperature is calculated based on an effective height of the concrete.

The thermal resistances shown in Figure 4.4-5 are defined as follows:

R_1 = convection resistance between the inlet air and the center opening surface

R_2 = conduction resistance from the center of the concrete base to the opening surface

R_3 = conduction from concrete base center elevation to the bottom section liner

R_4 = radiation resistance between the bottom plate and the canister

R_5 = convection resistance in the air gap between the canister and the cask bottom plate

R_6 = conduction between the bottom plate and the canister support tubes

R_7 = conduction between the canister support tubes and the canister

R_8 = conduction from the center of the concrete base to the side wall concrete

R_9 = conduction from the center of the concrete base to the inlet channel convection surface

R_{10} = convection at the air inlet channels

R_{11} = conduction between the bottom plate and side wall liner

R_{12} = conduction between the side node to the convection surface of the inlet channels

R_{13} = convection at the air inlet channels

R_{14} = conduction to the side wall submodel concrete nodes

During long-term storage, the storage cask is placed on the ISFSI reinforced concrete pad, to which heat is transferred via conduction from the cask bottom section. The heat transfer between the ISFSI pad and the cask bottom surface is site and time dependent; however, the ISFSI pad is generally cooler than the cask bottom section and is therefore conservatively neglected.

The basic methodology presented in Section 4.4.1.1.2 for the side wall submodel is again implemented for thermal analysis of the bottom section submodel. Convection takes place at the inlet channels, the central inlet plenum, and at the gap between the canister bottom end and the cask bottom section. The support tubes are positioned between the cask bottom section and the canister bottom surface, thus the air can flow through the tubes and between the tubes, with approximately the same velocity.

Nusselt number correlations for turbulent forced convection are the same as those presented for the side wall submodel in Section 4.4.1.1.2. If the flow is in the laminar regime, then the Nusselt number used is that for the constant heat flux case depending on the specific geometry as follows:[16]

Nu = 3.61 for laminar flow in the inlet channels,

Nu = 4.36 for laminar flow in a circular inlet duct, and

Nu = 8.235 for laminar flow between the cask bottom plate and the canister.

The node locations for the SINDA bottom section submodel are shown in Figure 4.4-5. Similar to the side wall submodel, each node is placed at the center of a discrete volume of material. The BASE submodel is divided into two sections, the portion underneath the canister and the portion underneath the storage cask side wall. A quasi-three-dimensional model is constructed to

represent the heat transfer in the storage cask bottom section. BASE (bottom section) submodel node locations are summarized in Table 4.4-3. Each node is assigned an initial temperature and thermal capacitance based on the mass of the node and the specific heat of the material.

4.4.1.1.5 Canister Shell Submodel

The canister shell submodel (CAN) forms the boundary of the SIDE submodel. The entire thermal mass of the canister has been modeled as a shell. For the purpose of storage cask thermal analysis, the canister internals have not been explicitly modeled because the thermal mass of the canister does not affect steady state analysis results. However, for transient analyses, the thermal mass of the canister is taken into account to determine the storage cask system temperature variation as a function of time.

4.4.1.2 Thermal Ratings

The storage cask design basis thermal load cases are summarized in Table 4.1-3. For the determination of storage cask thermal rating, only steady-state normal hot storage conditions (case 7, 100°F ambient) are considered. Long-term allowable material temperatures are applied to the normal hot storage case to establish the storage cask thermal rating.

The storage cask thermal ratings are based on the normal air flow path in the vertical orientation. Off-normal hot storage conditions (case 9, 125°F ambient) are not considered for the establishment of the cask thermal rating since short-term material allowable temperatures apply. Off-normal flow conditions such as blocked vents or horizontal orientation are not considered as the basis for establishing the cask thermal rating. Since these operating modes may result in steady-state temperatures at the cask thermal rating which exceed allowable material temperatures, transient analyses of these operating modes are performed. These transient cases are addressed in sections 4.5 and 4.6 for off-normal and accident conditions, respectively.

The short FuelSolutions™ W150 Storage Cask configuration is conservatively used as a basis for the storage cask thermal rating due to the shorter stack height and resultant lower mass flow rate of air through the cask dual annulus. Thermal qualification of the short storage cask bounds that for the long FuelSolutions™ W150 Cask.

The methodology discussed in Section 4.1.3.2 is implemented. The two design canister axial heat profiles in Figure 4.1-5 are applied to the canister shell assembly included in the storage cask thermal model as boundary conditions for the normal hot storage condition and the off-normal hot storage condition. The long-term allowable material temperatures in Table 4.3-1 are applied to the normal hot storage case. The total cask heat load (Q_{total}) is gradually increased until an allowable material temperature is reached. Since the storage cask materials are more thermally limiting than transfer cask, the storage cask thermal rating becomes the thermal rating for both casks. Results for maximum heat load rating (Q_{max}) case and maximum linear heat generation rate ($LHGR_{max}$) case are presented in Table 4.4-4 for each of the flux profiles considered. The maximum value of each becomes the storage cask thermal rating. As expected, the Q_{max} rating is achieved using the “max. thermal” profile and $LHGR_{max}$ rating is achieved with the “max. thermal gradient” profile. Storage cask temperature variations with Q_{max} and $LHGR_{max}$ are shown in Figure 4.4-6 and Figure 4.4-7, respectively.

4.4.1.3 Maximum Temperatures

The storage cask design basis thermal load cases are shown in Table 4.1-3. For normal conditions, only steady-state analysis with the normal air flow path, vertical orientation, and normal ambient conditions (0°F, 77°F, and 100°F) apply. These correspond to cases 5, 6, and 7 in Table 4.1-3. System temperatures for the normal cases are shown in Table 4.4-5 for the storage cask temperature locations presented in Figure 4.4-8. Table 4.4-7 summarizes the maximum material temperatures under normal storage conditions for each major storage cask component based on the maximum heat load rating Q_{max} (28 kW) with the "max. thermal" profile. System temperatures for the normal cases based on $LHGR_{max}$ (0.253 kW/in) with the "max. thermal gradient" profile are presented in Table 4.4-6. Table 4.4-8 summarizes the corresponding normal storage condition maximum material temperatures for the maximum linear heat generation rate, $LHGR_{max}$ (0.253 kW/in) with the "max. thermal gradient" profile. As can be seen from these two tables, the storage cask component temperatures do not exceed their allowable material temperatures for any case. Note that the maximum temperatures are based on the thermal ratings of the storage cask only. Since these ratings are established by increasing the heat load up to the controlling allowable material temperature, the limiting material (local concrete) is near the allowable material temperature (200°F) for the worst case design basis normal hot storage case. Storage cask temperatures under canister specific loading conditions are addressed in the applicable FuelSolutions™ Canister Storage FSARs.

In all cases, steady-state analysis shows that local concrete at the liner/concrete interface does not exceed 200°F, and average bulk concrete temperature does not exceed 150°F. It should be noted that the concrete thermocouple does not directly measure average concrete temperature, which is determined analytically as a weighted average of all structural concrete within the wall and bottom sections. Additionally, the thermocouple at the liner/concrete interface (Liner Thermocouple) does not directly measure the peak concrete temperature. This is due to the to fact that the peak temperature location of the axial heat profile is above the liner thermocouple location.

4.4.1.4 Minimum Temperatures

The temperatures in the storage cask components under normal cold conditions are listed in Table 4.4-5. Note that the temperatures shown are for a design basis canister at the maximum thermal rating and therefore do not represent the lowest expected component temperatures.

The low temperature compatibility of the storage cask components are also evaluated for the bounding load case of 0°F ambient temperature, zero decay heat, and no insolation. The steady-state temperatures of the storage cask for this analytically trivial case are 0°F. The component temperatures are within their minimum allowable temperatures in all cases.

4.4.1.5 Maximum Thermal Stresses

The maximum thermal stresses in the storage cask developed under normal conditions are evaluated in Chapter 3 of this FSAR.

4.4.1.6 Evaluation of Storage Cask Performance for Normal Conditions

Figure 4.4-9 presents the radial temperature distribution within the major components of the storage cask at the controlling axial location of the storage cask for normal, normal cold, and normal hot storage conditions and the maximum heat load rating, Q_{max} (28 kW). The corresponding axial temperature distribution of key storage cask components is presented in Figure 4.4-11. The storage cask radial temperature distributions at the hottest axial location for normal storage conditions and the maximum linear heat generation rate, $LHGR_{max}$ (0.253 kW/in) are presented in Figure 4.4-10. The corresponding axial temperature distributions are presented in Figure 4.4-12.

A storage cask heat balance under normal hot storage conditions and the maximum heat load rating (Q_{max}) is presented schematically in Figure 4.4-13. As can be seen, heat input to the cask is from SNF decay heat (28 kW) and solar (3.03 kW on top, 2.76 kW on sides). Most of the heat is lost to the natural convection air flow (24.19 kW) with the remaining heat lost through the cask to ambient through natural convection (1.89 kW from top, 2.54 kW from sides) and radiation (2.41 kW from top, 2.76 kW from sides).

Results of the steady-state analyses demonstrate that the storage cask allowable material temperatures under normal conditions are not exceeded for the cask thermal rating applied concurrently with the design basis ambient conditions which envelop those at all sites within the contiguous United States. Therefore, the storage cask is suitable for the dry storage of all FuelSolutions™ canister classes and types and SNF loadings with decay heat loads which are bounded by the storage cask thermal rating summarized in Table 4.1-5. Over the long-term storage period, the SNF decay heat decays, thus increasing the margins relative to the allowable temperatures.

Table 4.4-1 - Storage Cask SIDE Submodel Axial Node Location

Canister Shell Node	Node Length (inches)	Axial Position (inches)
100	8	4.00
101	8	12.00
102	8.1	20.05
103	8.2	28.20
104	8.2	36.40
105	8.2	44.60
106	8.2	52.80
107	8.2	61.00
108	8.2	69.20
109	8.2	77.40
110	8.2	85.60
111	8.2	93.80
112	8.2	102.00
113	8.4	110.30
114	8.2	118.60
115	8.4	126.90
116	8.4	135.30
117	8.4	143.70
118	8.4	152.10
119	8.5	160.55
120	8.6	169.10
121	8.6	177.70
TOTAL LENGTH:		182.00

Table 4.4-2 - Storage Cask Top Section Submodel Node Locations[1]

NODE	Axial Position (inches)	Radial Position (inches)
10	1.0	16.5
11	7.5	16.5
12	13.0	16.5
13	14.0	16.5
20	7.5	33.5
21	7.5	35.625
22	7.5	39.25
30	1.0	53.625
31	7.5	53.625
32	13.0	53.625
41	7.5	69.0

Table 4.4-2 Notes:

(1) Node positions are referenced to the canister top centerline.

Table 4.4-3 - Storage Cask Bottom Section Submodel Node Locations[1]

NODE	Axial Position (inches)	Radial Position (inches)
114, 124, 134	0	18
113,123,133	0	28.25
112, 122, 132	0	38.5
111, 121, 131	0	56
110, 120, 130	0	69
204, 214, 224, 234, 244	11	18
203, 213, 223, 233, 243	11	28.25
202, 212, 222, 232, 242	11	38.5
201, 211, 221, 231, 241	11	56
200, 210, 220, 230, 240	11	69
314, 324, 334	18	18
313,323,333	18	28.25
312, 322, 332	18	38.5
311, 321, 331	18	56
310, 320, 330	18	69

Table 4.4-3 Notes:

(1) Node positions are referenced to the cask bottom centerline.

Table 4.4-4 - Storage Cask Thermal Rating

Axial Heat Profile	Q_{max} (kW)	$LHGR_{max}$ (kW/in)
Max. Thermal Profile	28.0	0.204
Max. Thermal Gradient Profile	21.0	0.253
Storage Cask Thermal Rating	**28.0**	**0.253**

Table 4.4-5 - Storage Cask Normal System Temperatures at Q_{max}=28 kW

Storage Cask Component	Location Number[1]	Ambient Conditions		
		Normal Cold (0°F ambient, no solar)	Normal Storage (77°F ambient, with solar)	Normal Hot (100°F ambient, with solar)
Top Cover	1	28	139	160
	2	80	187	211
Shield Ring	3	32	151	173
Cask Side Wall	4	19	131	151
	5	61	169	197
	6	34	136	160
	7	19	119	141
	8	44	145	174
	9	27	124	149
	10	18	112	135
	11	15	104	129
	12	11	100	124
	13	8	97	120
Bottom Section	14	2	84	107
	15	4	92	115
	16	3	86	109
	17	5	91	114
Tierods	6	34	136	160
Support Tubes	18	1	81	104

Table 4.4-5 Notes:
(1) Storage cask temperature points are shown in Figure 4.4-8.

Table 4.4-6 - Storage Cask Normal System Temperatures at $LHGR_{max}$=0.253 kW/in

Storage Cask Component	Location Number[1]	Ambient Conditions		
		Normal Cold (0°F ambient, no solar)	Normal Storage (77°F ambient, with solar)	Normal Hot (100°F ambient, with solar)
Top Cover	1	27	138	159
	2	78	185	208
Shield Ring	3	30	149	171
Cask Side Wall	4	17	130	150
	5	56	163	191
	6	31	134	158
	7	18	118	140
	8	37	139	167
	9	23	120	144
	10	15	110	133
	11	5	89	112
	12	4	91	114
	13	4	91	114
Bottom Section	14	32	82	105
	15	32	89	112
	16	32	84	106
	17	32	88	110
Tierods	6	31	134	158
Support Tubes	18	32	80	103

Table 4.4-6 Notes:
(1) Storage cask temperature points are shown in Figure 4.4-8.

Table 4.4-7 - Storage Cask Maximum Temperatures at Q_{max}=28 kW for Normal Conditions[1]

Component/ Location	Normal Cold Storage (0°F ambient)	Normal Storage (77°F ambient)	Normal Hot Storage (100°F ambient)	Allowable Material Temperature
Canister Shell	337	423	447	800
Inner Air Gap	105	199	226	n/a
Thermal Shield	152	262	293	600
Outer Air Gap	83	179	207	n/a
Liner	61	169	197	700
Local Concrete	61	169	197	200
Average Concrete	25	123	147	150
Liner Thermocouple	48	150	179	n/a
Concrete Thermocouple	29	126	151	n/a

Table 4.4-7 Notes:
(1) All temperatures are in °F.

Table 4.4-8 - Storage Cask Maximum Temperatures at $LHGR_{max}$=0.253 kW/in for Normal Conditions[1,2]

Component/ Location	Normal Cold Storage (0°F ambient)	Normal Storage (77°F ambient)	Normal Hot Storage (100°F ambient)	Allowable Material Temperature (°F)
Canister Shell	404	486	508	800
Inner Air Gap	91	181	208	n/a
Thermal Shield	181	294	325	600
Outer Air Gap	73	166	194	n/a
Liner	58	165	195	700
Local Concrete	57	165	195	200
Average Concrete	20	117	141	150
Liner Thermocouple	43	146	175	n/a
Concrete Thermocouple	25	124	148	n/a

Table 4.4-8 Notes:
(1) All temperatures are in °F.
(2) Heat load for LHGRmax is 21 kW with the "max. thermal gradient" profile.

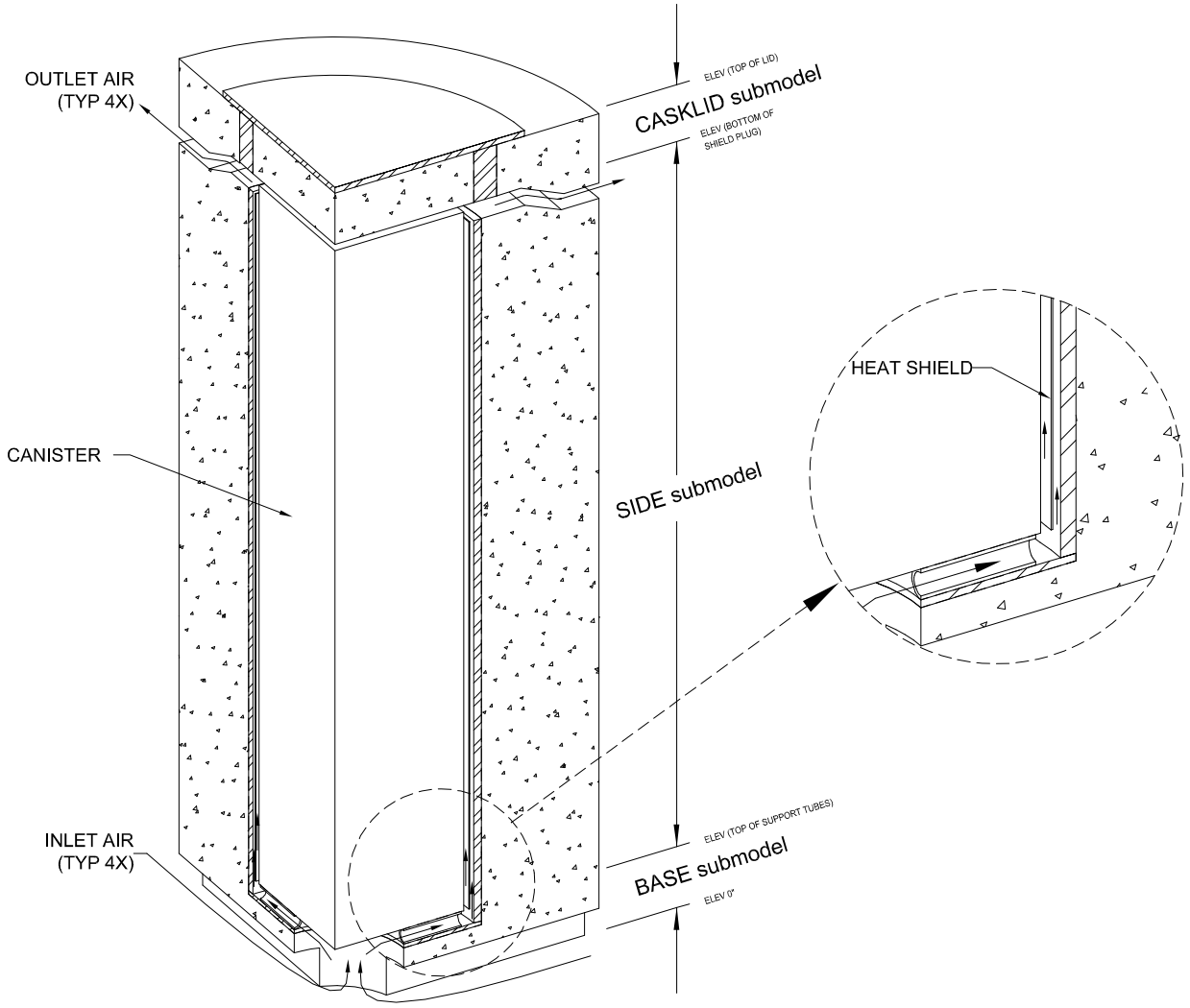

Figure 4.4-1 - Storage Cask Thermal Model, Normal Vertical

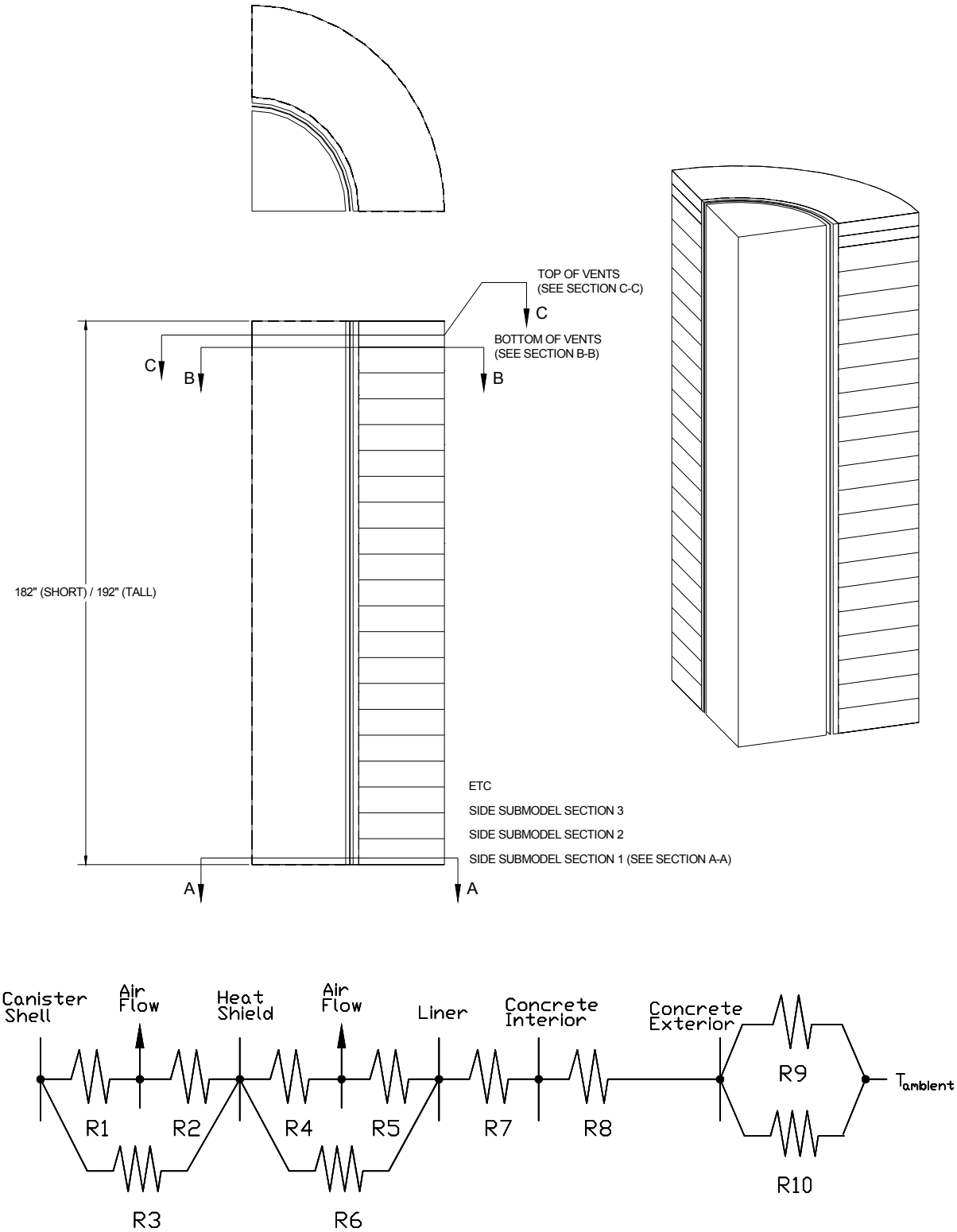

Figure 4.4-2 - Storage Cask SIDE Thermal Submodel

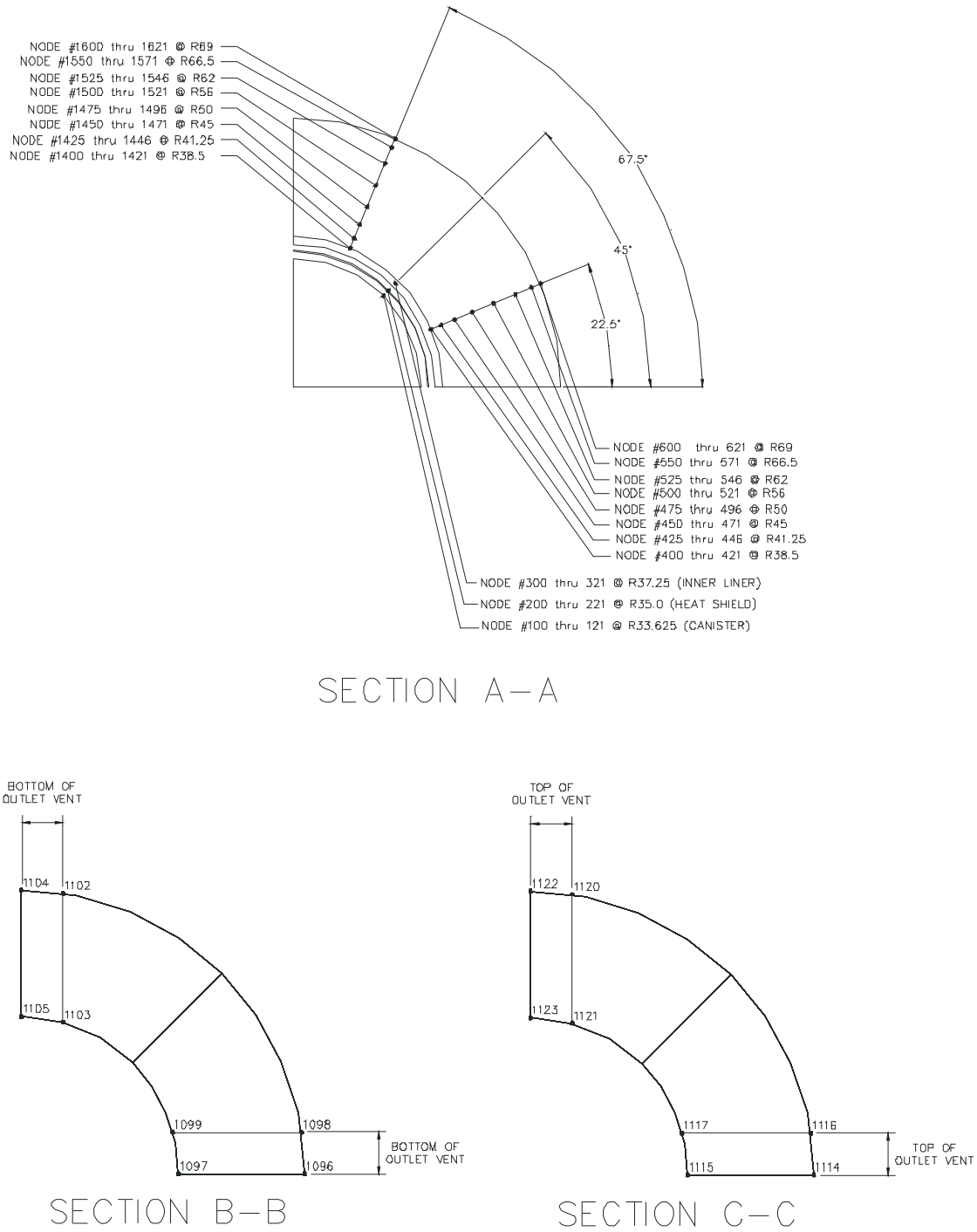

Figure 4.4-3 - Storage Cask SIDE Thermal Submodel - Sections

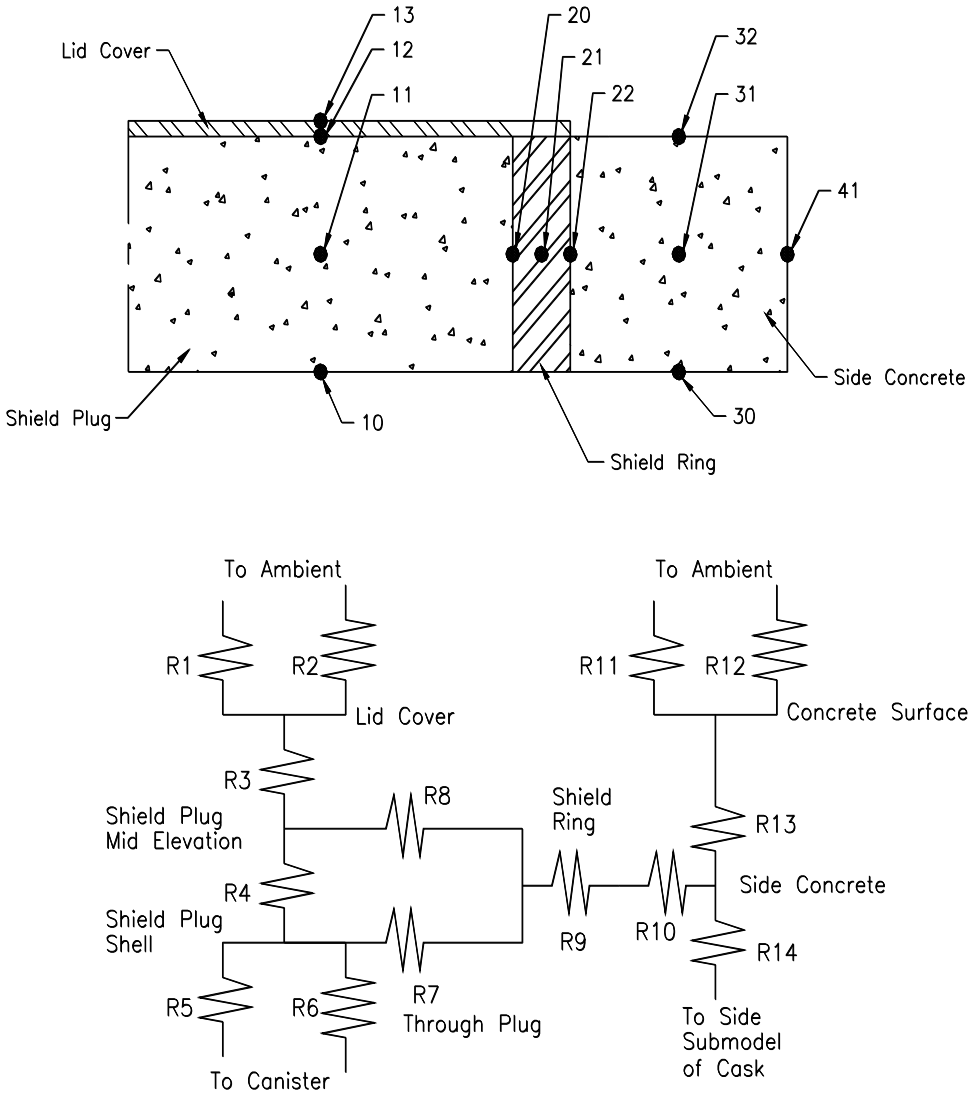

Figure 4.4-4 - Storage Cask CASKLID Thermal Submodel

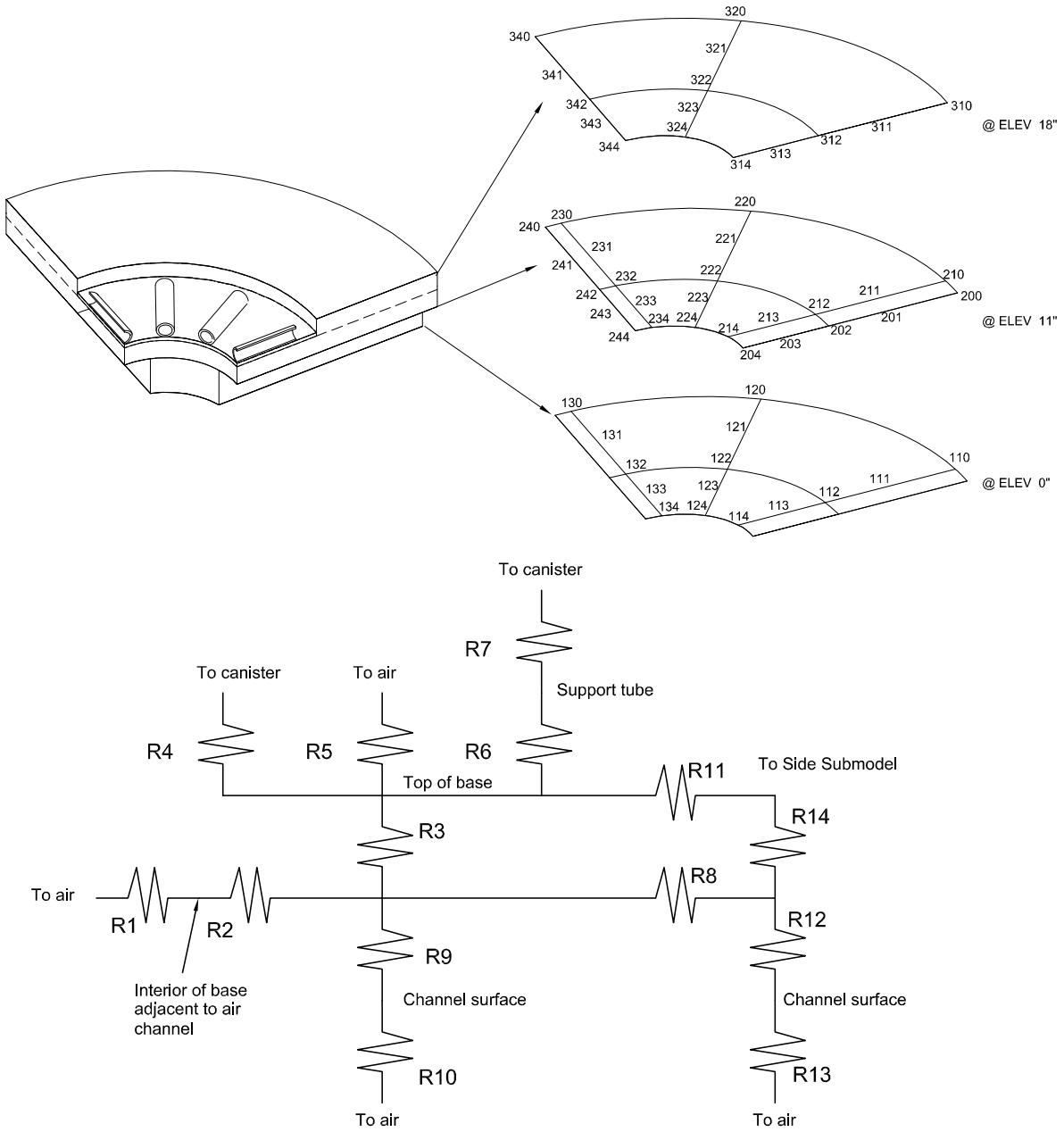

Figure 4.4-5 - Storage Cask BASE Thermal Submodel

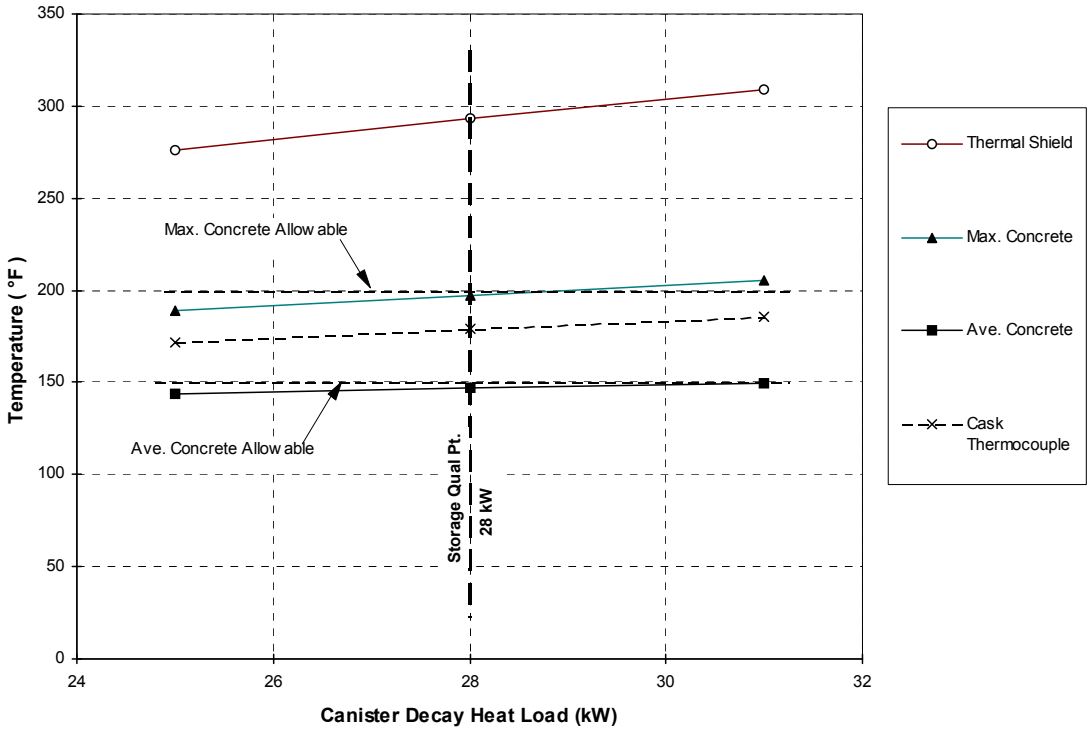

Figure 4.4-6 - Storage Cask Temperature Variation with Q_{max}

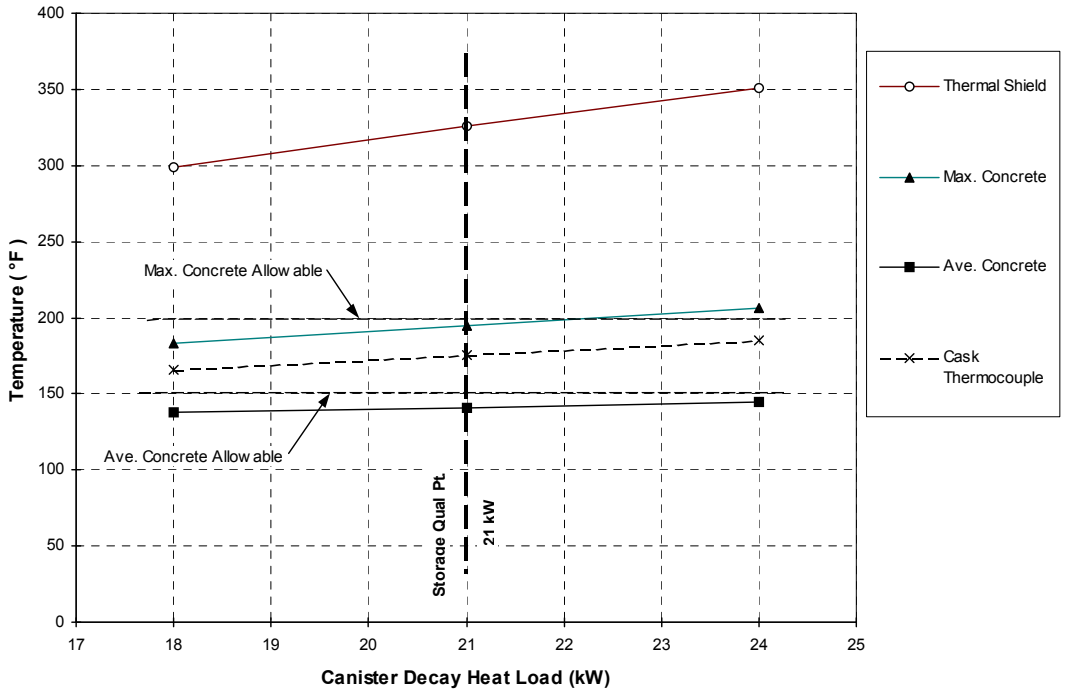

Figure 4.4-7 - Storage Cask Temperature Variation with $LHGR_{max}$

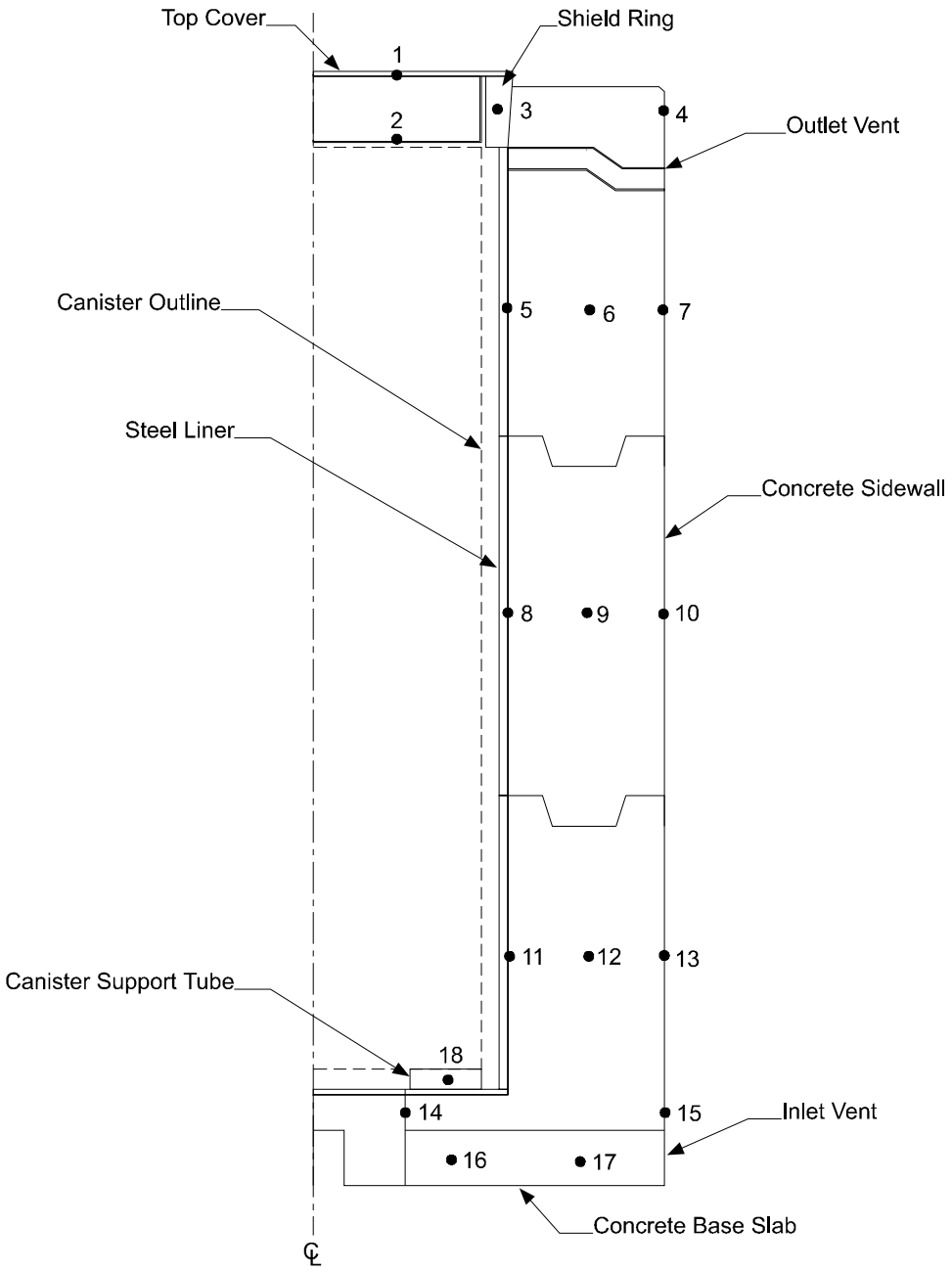

Figure 4.4-8 - Storage Cask Temperature Points

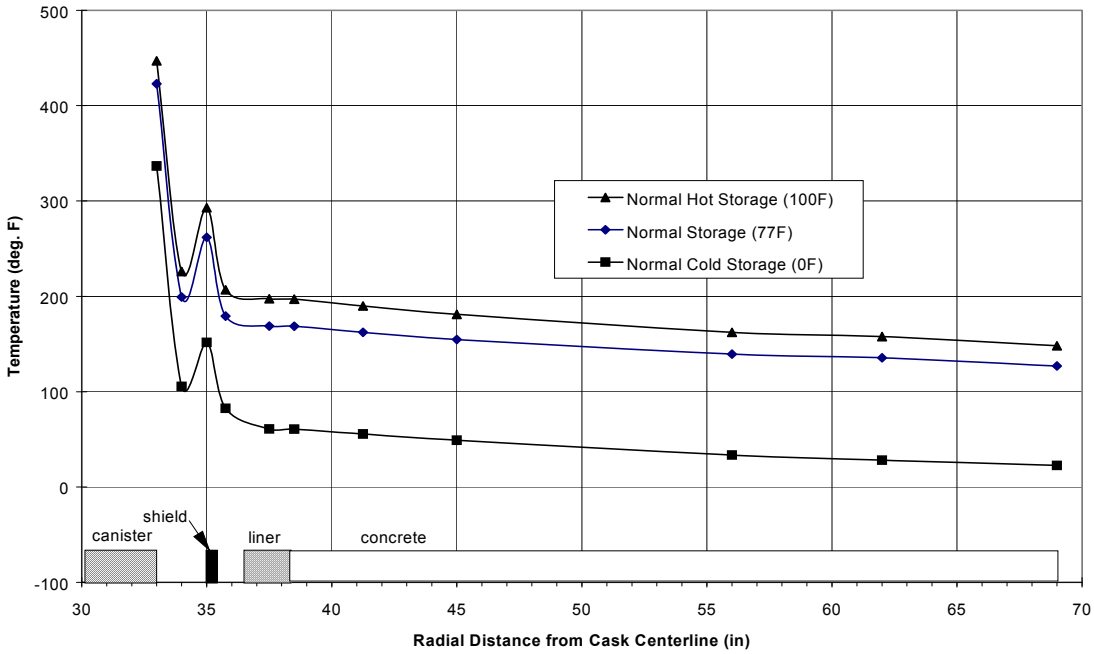

Figure 4.4-9 - Storage Cask Radial Temperatures at Q_{max}=28 kW

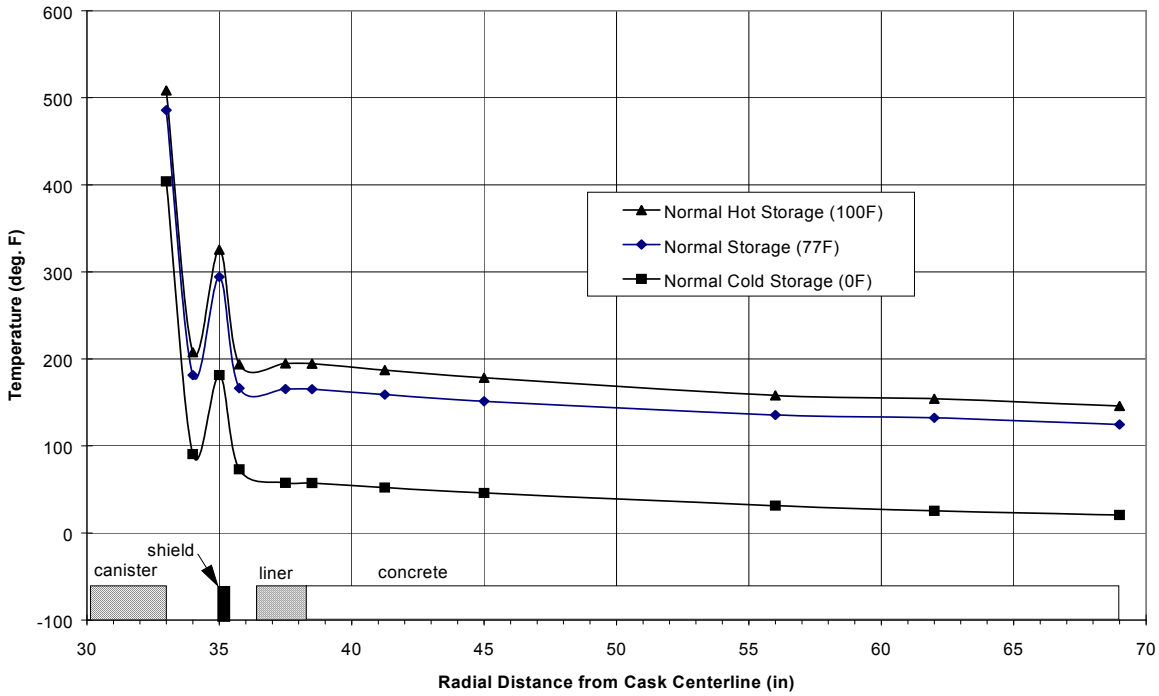

Figure 4.4-10 - Storage Cask Radial Temperatures at $LHGR_{max}$=0.253 kW/in

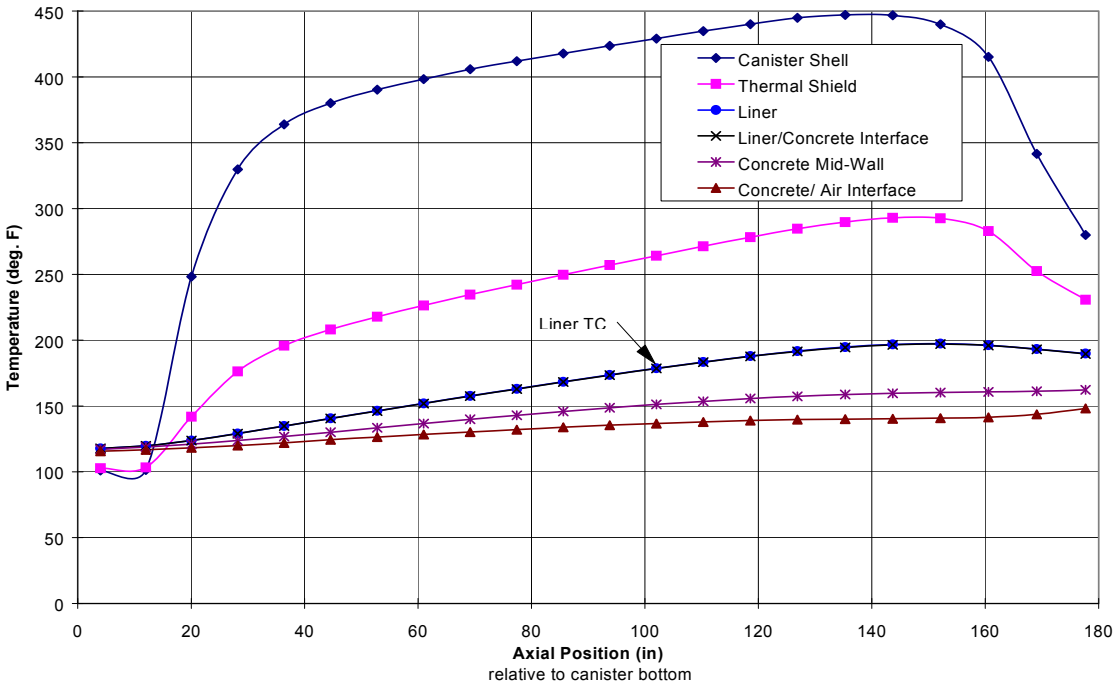

Figure 4.4-11 - Storage Cask Axial Temperatures at Q_{max} =28 kW

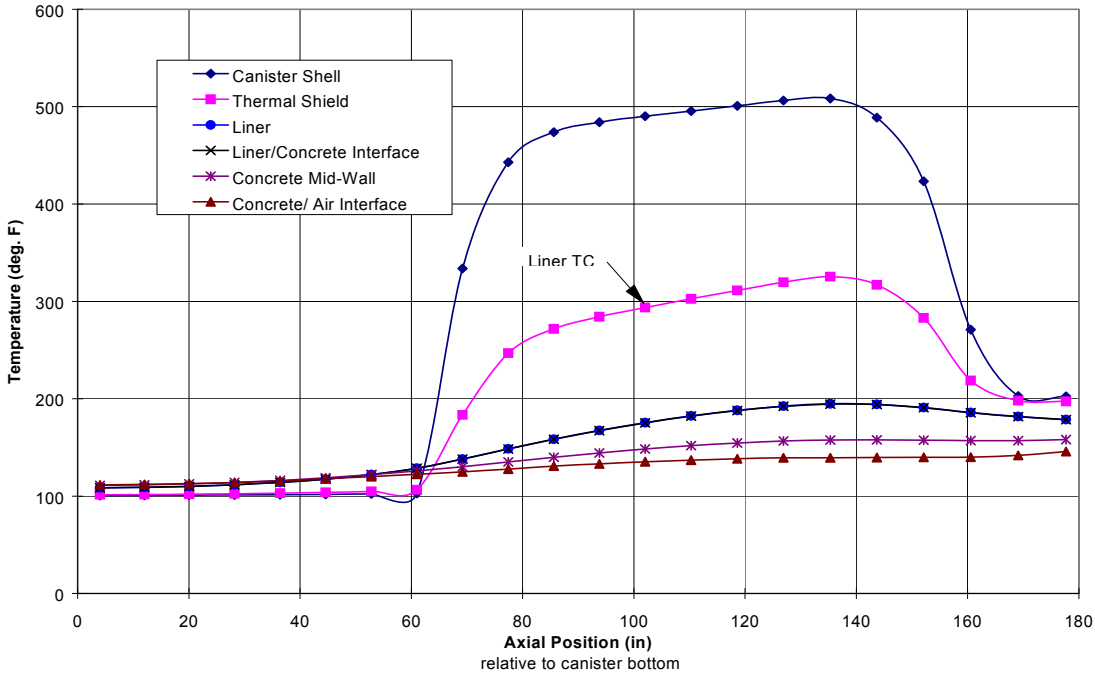

Figure 4.4-12 - Storage Cask Axial Temperatures at the $LHGR_{max}$=0.253 kW/in

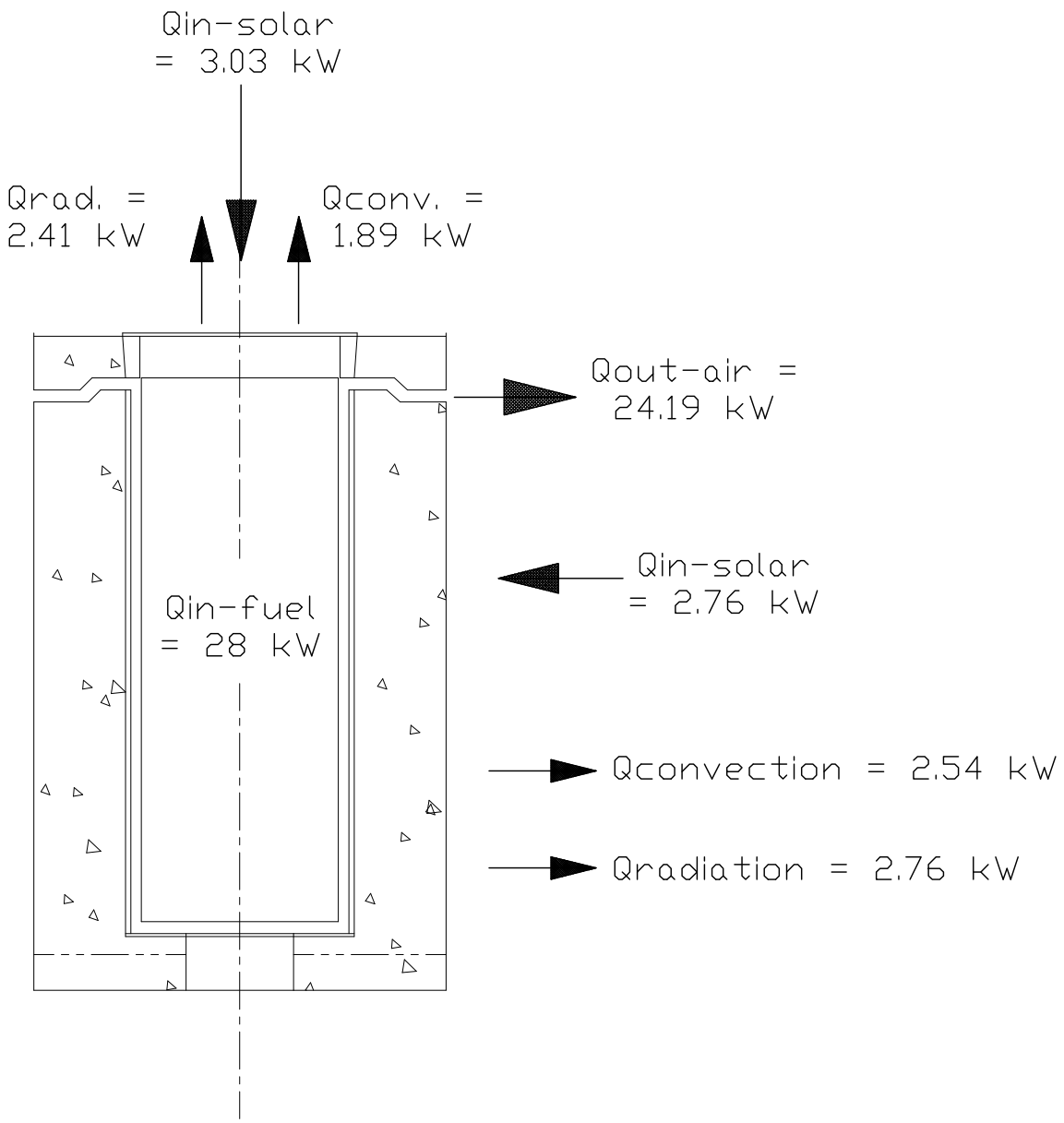

Figure 4.4-13 - Storage Cask Heat Balance

4.4.2 Transfer Cask

To validate the performance of the FuelSolutions™ W100 Transfer Cask under normal conditions, the transfer cask is evaluated for the design basis normal climatic conditions concurrently with the bounding canister heat flux profiles developed in Section 4.1.3. The analysis presented herein establishes the thermal ratings such that the transfer cask allowable material temperatures are not exceeded when heat loads at the cask thermal ratings are applied concurrently with the ambient conditions which envelop those at all sites within the contiguous United States. Transfer cask temperatures for major components of interest are determined for the applicable design basis load cases shown in Table 4.1-4.

This section presents the thermal analysis of the FuelSolutions™ W100 Transfer Cask only. The transfer cask thermal model described in this section is also utilized for the thermal analysis of FuelSolutions™ canisters. The thermal evaluation of each FuelSolutions™ canister and the corresponding spent fuel cladding is provided in Chapter 4 of the respective FuelSolutions™ Canister Storage FSAR. Additionally, since the transfer cask can not be pressurized, an internal pressure analysis is not performed for the transfer cask. The design basis internal pressures for the FuelSolutions™ canisters are developed in Chapter 4 of the respective FuelSolutions™ Canister Storage FSARs.

The FuelSolutions™ W100 Transfer Cask is used to transfer SNF assemblies contained in a FuelSolutions™ canister between the plant's spent fuel pool and the FuelSolutions™ storage cask or transportation cask. During this normal canister loading, closure, and transfer process, the transfer cask is used in both the horizontal and vertical orientations. As discussed in Chapter 8 of this FSAR, the transfer cask may be used to transfer loaded canisters to the storage cask or transportation cask vertically or horizontally. The thermal evaluation of the transfer cask addresses the heat transfer modes for both orientations.

Regardless of the canister transfer orientation, the transfer cask is in the vertical orientation during the loading of the canister in the spent fuel pool and during the subsequent canister closure operations in the plant's fuel building. Following these operations and the placement of the top cover on the cask, the transfer cask is handled vertically by the plant crane. If horizontal canister transfer is to be performed, the transfer cask is rotated to the horizontal orientation for on-site transport of the canister and cask from the fuel building to a designated location to perform horizontal canister transfer operations. During this time the transfer cask may be exposed to ambient conditions, including insolation, for periods of time sufficient to obtain steady-state conditions.

Water will be present during closure operations within the annulus between the transfer cask cavity and canister shell. As discussed in section 4.1.1.2, this annulus water may be recirculated to remove decay heat from the FuelSolutions™ canister during canister reflood operations or during normal closure operations to prevent the annulus water from boiling or to prevent the canister cavity water from boiling. Evaluation of these thermal conditions is presented in the applicable FuelSolutions™ Canister Storage FSAR.

4.4.2.1 Thermal Model

Similar to the storage cask discussed in Section 4.4.1, the analytical thermal model of the FuelSolutions™ W100 Transfer Cask is developed for use with the SINDA/FLUINT® computer program.

Heat loading on the transfer cask arises from a combination of external conditions (ambient temperature and insolation) and the internal decay heat from the canister's SNF payload. The transfer cask is designed to accommodate all FuelSolutions™ canisters and payloads satisfying the thermal requirements of the transfer cask. The transfer cask can accommodate both the long (192") and short (182") FuelSolutions™ canister shells. For short canisters, a 10" spacer is installed in the bottom of the transfer cask cavity. The cask spacer is not explicitly modeled, but the canister positioning and general heat transfer effects are included. The thermal modeling of each FuelSolutions™ canister assembly and its qualified SNF payloads are discussed in Chapter 4 of the respective FuelSolutions™ Canister Storage FSARs. For the purposes of the transfer cask thermal analysis presented in this section, the SNF decay heat loading on the cask is simulated by modeling the external surface of the canister and assuming a heat flux distribution on this surface as defined in Section 4.1.3.2. The solar insolation values applied are summarized in Table 4.1-4.

The heat transfer within the cask is axisymmetric when the cask is in the vertical orientation. Non-axisymmetric conditions exist during horizontal operations due to the eccentric positioning of the canister within the cask and variations in the convection heat transfer coefficient, insolation, and the effective radiation view factor with the circumferential position on the cask. However, for the purposes of the thermal qualification of the transfer cask, an axisymmetric definition of the cask can be used since this results in the maximum thermal loading on any circumferential segment of the cask.

The lead shield is formed by a controlled pour of molten lead into the annulus between the two stainless steel shells. The higher thermal expansion coefficient of lead in comparison with that of stainless steel leads to greater shrinkage in the lead as the lead and steel cool following the lead pour. This shrinkage results in a small air gap at the interface of the outside surface of the lead and the structural shell of the cask.

The maximum gap dimension between the lead and structural shell is determined using a differential volume calculation approach. The calculated gap size reaches its maximum dimension of 0.036 inches at room temperature and decreases to 0 inches at the lead melt point (620°F). To account for possible local areas with greater void volumes and provide additional conservatism, the computed gap size is arbitrarily doubled in size at each point. It is this "double computed lead gap" relationship that is assumed by the transfer cask thermal model when computing the size of the lead gap and its subsequent effect on heat transfer across the gap. The gap size is related to the local temperature via the equation:

$$\text{Gap size} = -9.135\text{x}10^{-8}\,(T_{Gap})^2 - 6.535\ \text{x}10^{-5}\,T_{Gap} + 0.07605$$

where the gap size is in inches and T_{gap} is in °F. Figure 4.4-19 illustrates the trend of lead gap size with temperature and presents the fit between the above equation and the computed lead gap size across the temperature range expected.

Temperature dependent thermal properties, such as specific heat and thermal conductivity, are assumed for the transfer cask thermal analysis as documented in Section 4.2. An emissivity of 0.3 is used for the inner liner and the structural shell. An emissivity of 0.85 is assumed for the coated outer surface of the liquid neutron shield outer shell (Table 4.2-2). The liquid neutron shield may be drained for certain thermal operating modes presented in Table 4.1-4, resulting in radiative heat transfer within the neutron shield annulus. Under these conditions, the outer surface of the structural shell and inner surface of the liquid neutron shield jacket are assumed to have an emissivity of 0.4, corresponding to a commercial sandblasted finish. The lead shielding surface is assumed to have an emissivity of 0.6 for radiation exchange between its outer surface and the inner surface of the outer steel shell.

The additional heat transfer removal capacity provided by the transfer trunnions is conservatively neglected in the thermal model given the fact that the trunnion encompasses a small portion of the outer surface of the cask and that the thermal conductivity of stainless steel is about the same as the effective thermal conductivity across the composite cask wall.

The presence of the horizontal transfer skid and other miscellaneous support equipment on the thermal performance of the transport cask is conservatively ignored. The physical location of these items are remote enough from the cask so as not to affect the convection heat transfer and the heat conducted through the trunnions into the skid serves to slightly lower the temperatures in the cask.

The same transfer cask thermal model is used for all steady-state normal conditions with the cask in the vertical orientation. Minor adjustments are made as necessary due to differences in the transfer cask thermal operating modes summarized in Table 4.1-4. The transfer cask thermal model utilized for analysis of conditions with the cask in the horizontal orientation differs slightly from that used for vertical transfer cask conditions. Heat transfer variations resulting from changes in the transfer cask orientation or configuration between thermal operating modes are discussed below.

4.4.2.1.1 Conduction Heat Transfer

Conduction heat transfer is modeled within the transfer cask wall for all cask orientations and configurations. The heat rejected by the canister is transferred to the inside surface of the inner shell of the cask. Within each transfer cask wall cylindrical component (inner shell, lead, structural shell, neutron shield outer shell), heat is both stored and conducted. The amount of heat stored for any time interval is given by:[16]

$$Q_{sto} = \pi(r_1^2 - r_0^2)lC_p\rho(T_1' - T_1)$$

where:

Q_{sto} = Heat stored in element

r_1 = Outside radius of cylinder

r_o = Inside radius of cylinder

l = Length of cylinder

C_p = Specific heat of cylinder material

ρ = Density of cylinder material

T_1' = Temperature at the end of the time period

T_1 = Temperature at the beginning of the time period

Conduction in the radial direction through the cylinder is given by:[16]

$$Q_{con} = \frac{2\pi k l}{\ln(r_1 / r_0)}(T_1 - T_0)$$

where:

Q_{con} = Conduction heat flow rate

k = Thermal conductivity of cylinder material

The above equations are applicable to each transfer cask shell section interface through the cask wall, with appropriate values for the radii and the thermal conductivity depending on the component and material. The dimensions of the gap between the outer surface of the lead shield and the structural shell vary linearly with changes in temperatures. The heat transfer across the lead gap is by conduction (i.e., Nusselt number = 1.0) and radiation only. The conductive heat transfer (Q_{con}) across the lead gap is computed using the radial conduction equation and the thermal conductivity of air.

4.4.2.1.2 Heat Transfer within the Transfer Cask/Canister Annulus

With air in the transfer cask/canister annulus, heat transfer from the canister shell to transfer cask inner shell is accomplished through conduction and radiation only. Calculation of the Nusselt number within the annulus for consideration of convection effects results in approximate unity (Nu=1), indicating a sluggish regime which is little more effective than pure fluid conduction. This applies in both horizontal and vertical transfer cask orientations, regardless of canister position eccentricity.

For the case with water in the annulus (case 3, Table 4.1-4), the water is considered opaque and radiative heat exchange across the annulus is neglected. Natural convective heat transfer is also negligible, as discussed above. Heat transfer across the water filled annulus is by pure conduction only, as discussed in Section 4.4.2.1.1 above. Although recirculation of cooling water in the annulus may be used to remove cask heat, this heat transfer mode is neglected for the transfer cask thermal qualification presented in this FSAR. Recirculation of cooling water is considered only for canister reflood analyses presented in the respective FuelSolutions™ Canister Storage FSARs.

4.4.2.1.3 Heat Transfer within the Liquid Neutron Shield - Horizontal Cask

During normal horizontal transfer cask operations, the liquid neutron shield is filled with water. Air in the liquid neutron shield is considered only for the loss of neutron shield accident, discussed later in Section 4.6.2.1. Since the water is considered opaque, radiative heat exchange

across the neutron shield is neglected. The heat transferred across the liquid neutron shield is computed using correlations for a horizontal annulus.

The liquid neutron shield outer shell is supported from the structural shell by 16 full length steel ribs equally spaced around the cask circumference. Each rib contains large flow holes to allow liquid mixing and circulation for conduction and convection heat transfer. The increased thermal conductivity of the steel ribs, relative to the neutron shield liquid (water), is conservatively neglected.

Free Convection

Free convection in the annular space between the structural shell and the liquid neutron shield jacket is correlated in terms of a Grashof number or Rayleigh number (the product of the Grashof number and the Prandtl number) based on the width (δ) of the annuli between the two cylinders:[19]

$$\delta = \frac{(D_0 - D_1)}{2}$$

where:

δ = Radial gap thickness between cylinders

D_o = Inside diameter of outer cylinder

D_i = Outside diameter of inner cylinder

The Grashof number is given by:[19]

$$N_{Gr,\delta} = \frac{g_c \beta \rho^2 \delta^3 \Delta T}{\mu^2}$$

where:

$N_{Gr,\delta}$ = Grashof number

g_c = Acceleration of gravity

β = Bulk modulus of fluid (water) at film temperature

The heat transfer is based on the standard equation for heat transfer through a cylinder and using an equivalent thermal conductivity for the water:[16]

$$Q = \frac{2\pi k_e L \Delta T}{\ln(D_o / D_i)}$$

where:

Q = Heat flow rate

[19] Raithby, G. D., and Hollands, K. G. T., *A General Method of Obtaining Approximate Solutions to Laminar and Turbulent Free Convection Problems*, Advances in Heat Transfer, Volume 11, pp 265-315, Academic Press, New York, 1975.

k_e = Effective thermal conductivity of fluid

D_o = Outside diameter of outer cylinder

D_i = Inside diameter inner cylinder

L = Cylinder length

The effective thermal conductivity is correlated in terms of a modified Rayleigh number, Ra^*_c:[19]

$$\frac{k_e}{k} = 0.386\left(\frac{N_{Pr}}{0.861 + N_{Pr}}\right)^{1/4} Ra^{*\,1/4}_c$$

where:

$$Ra^*_c = \frac{[\ln(D_0/D_i)]^4}{\delta^3 (D_i^{-3/5} + D_o^{-3/5})^5} N_{Gr,\delta} N_{Pr}; \qquad 100 < Ra^*_c < 10^8$$

k = Thermal conductivity of the fluid at the film temperature

The thermal analysis program checks to see if k_e is less than k, and if so, k_e is set equal to k (i.e., the heat transfer through the neutron shield is as straight conduction through the water layer).

4.4.2.1.4 Heat Transfer within the Liquid Neutron Shield - Vertical Cask

During normal vertical transfer cask operations, the liquid neutron shield may be filled with water or air. Radiative heat exchange across the neutron shield is considered for the air filled cases, but neglected for the water filled cases. For all conditions, heat is transferred across the liquid neutron shield by conduction and convection. Free convection correlations are used for all conditions, regardless of fluid (air or water).

Free Convection

For free convection in a vertical enclosed space the convection coefficient is given by:[20]

$$Nu = [Nu_1, Nu_2, Nu_3]_{max}$$

where:

$$Nu_1 = 0.0605(N_{Gr,\delta} N_{Pr})^{1/3}, Nu_2 = 0.242\left(\frac{(N_{Gr,\delta} N_{Pr})}{H/L}\right)^{0.272}, Nu_3 = \left(1 + \left[\frac{0.104(N_{Gr,\delta} N_{Pr})^{0.293}}{1 + (6310/(N_{Gr,\delta} N_{Pr}))^{1.36}}\right]^3\right)^{1/3}$$

for: $N_{GR,\delta} \le 10^8$, and $5 \le H/L \le 110$.

In the above equations, the Nusselt (Nu) number is simply:

$$Nu = \frac{h_c L}{k}$$

h_c = Convective coefficient of conductance

[20] Guyer, E.C., Handbook of Applied Thermal Design, McGraw-Hill Book Company, Inc., 1989.

k = Fluid thermal conductivity

H = Height of vertical space

L = Characteristic length (width of horizontal space in this case)

δ = Radial spacing between cylinder walls

$N_{Gr,\delta}$ = Grashof number based on radial spacing

The Grashof number is given by:[19]

$$N_{Gr,\delta} = \frac{\rho^2 g_c \beta \delta^3 (T_1 - T_2)}{\mu^2}$$

where:

ρ = Density of fluid

g_c = Acceleration of gravity

β = Bulk modulus of fluid (water or air) at film temperature

μ = Absolute viscosity of fluid

T_1 = Warmer wall temperature

T_2 = Colder wall temperature

For values of the Grashof number, $N_{Gr,\delta}$, below 2000 the heat transfer is essentially straight conduction.

For vertical cases where the neutron shield is assumed to be drained (i.e., case 3), radiation heat exchange between the structural shell and liquid neutron shield shell is added to the convection heat transfer within the shield.

4.4.2.1.5 Convection Heat Transfer to Air

Transfer cask heat is transferred to ambient air by free convection and by thermal radiation to the surroundings. An axisymmetric model based on an average convective coefficient is used for the natural convection to air in both horizontal and vertical transfer cask orientations.

Natural Convection to Air - Horizontal Cask

Heat transfer by natural or "free" convection to the ambient air occurs at the outer surface of the neutron shield shell. The magnitude of the natural convection heat removal can be correlated for horizontal cylinders as:[16]

$$Nu = \left[0.60 + \frac{0.387 N_{Gr,D}^{1/6}}{\left[1 + \left(0.559 / N_{Pr}\right)^{9/16}\right]^{8/27}} \right]^2$$

where:

$$N_{Gr,D} = \frac{\rho^2 g_c \beta D^3 \Delta T}{\mu^2} \qquad 10^{-5} < N_{Gr,D} < 10^{12}$$

The free convective heat transfer from the ends of the horizontal cask, or the cylindrical surface of the vertical cask, are modeled using a correlation for a vertical plate:[21]

$$Nu = \left(Nu_L^{\ 6} + Nu_T^{\ 6}\right)^{1/6} \qquad 1 < N_{Gr,L} < 10^{12}$$

where:

$$Nu_L = \frac{2.8}{\ln\left[1 + 2.8/\left(C_L\left[N_{Gr,L}N_{Pr}\right]^{1/4}\right)\right]}, Nu_T = C_V\left[N_{Gr,L}N_{Pr}\right]^{1/3}$$

and

$$C_L = \frac{0.671}{\left[1 + \left(\frac{0.492}{N_{Pr}}\right)^{9/16}\right]^{4/9}}, C_V = \frac{0.13N_{Pr}^{\ 0.22}}{\left(1 + 0.61N_{Pr}^{\ 0.81}\right)^{0.42}}$$

Natural Convection to Air - Vertical Cask

For analyses involving a vertical cask orientation, convection from the cask bottom and lid are handled with the flat plate correlations presented below. Convection from the side surface is calculated using the flat vertical plate correlations presented above. Conduction from the cask bottom is conservatively neglected.

The transfer cask top cover is evaluated as a plate facing upward with a surface temperature higher than the surroundings, the heat transfer coefficient is given by:[22]

$$h_c = 0.54\frac{k}{L'}(N_{Gr,L'}N_{Pr})^{1/4} \qquad 10^5 < N_{Gr,L^*} < 2 \text{ x } 10^7$$

For turbulent flow, the heat transfer coefficient is given by:[22]

$$h_c = 0.14\frac{k}{L'}(N_{Gr,L'}N_{Pr})^{1/3} \qquad 2 \text{ x } 10^7 < N_{Gr,L^*} < 3 \text{ x } 10^{10}$$

The transfer cask bottom is evaluated as a heated plate facing downward. Free convection in laminar flow is given by:[22]

$$h_c = 0.27\frac{k}{L'}(N_{Gr,L'}N_{Pr})^{1/4} \qquad 3 \text{ x } 10^5 < N_{Gr,L^*} < 3 \text{ x } 10^{10}$$

4.4.2.1.6 Radiation Heat Transfer

Radiation heat transfer is applied for the applicable thermal operating conditions across the transfer cask air gaps at the annulus, lead outer surface, and the neutron shield. Heat is also transferred from the cask outer surface to ambient through radiation heat transfer. The heat transfer by thermal radiation between two gray bodies is given by:[22]

---

[21] Rohsenow, Harnett, and Ganic, *Handbook of Heat Transfer Fundamentals*, 2nd Edition, McGraw-Hill, Inc., 1989.

[22] Kreith, F., "Principles of Heat Transfer," 3rd. Ed., pp. 636, Crowell, Harper, and Row, Inc. 1973.

$$Q_{rad} = \frac{\sigma A_1 (T_1^4 - T_2^4)}{\frac{1-\varepsilon_1}{\varepsilon_1} + \frac{1}{F_{12}} + \frac{(1-\varepsilon_2)A_1}{\varepsilon_2 A_2}}$$

where:

Q_{rad} = Thermal radiation heat flow rate

A_1 = Area of surface 1

A_2 = Area of surface 2

ε_1 = Emissivity of surface 1

ε_2 = Emissivity of surface 2

σ = Stefan-Boltzmann constant

F_{12} = The shape or view factor from surface 1 to surface 2

T_1 = Temperature of surface 1

T_2 = Temperature of surface 2

For two concentric cylinders of infinite length the shape factor, F_{12}, is 1.0. For thermal radiation heat transfer from the cask outer surface to ambient, the effective surface area for the ambient (A_2) is assumed to be infinite.

4.4.2.1.7 SINDA Model

For the sake of simplicity, and to take advantage of the submodeling capability provided by SINDA/FLUINT®, the transfer cask is broken up into three analytical submodels. The three submodels are: 1) "CASKLID," which includes the top covers and that portion of the side wall above the liquid neutron shield, 2) "SIDEWALL," which includes the section of the cask covered by the liquid neutron shield, and 3) "CASKEND," which includes the bottom cover and that portion of the side wall below the liquid neutron shield. The layout of the transfer cask side wall submodel divisions is shown in Figure 4.4-14. Figure 4.4-15 through Figure 4.4-18 shows the submodel nodal layouts for the side wall submodels. Although not shown on the analytical model figures, the canister shell and annular gap are explicitly modeled. As is shown in Figure 4.4-14, the side wall region of the cask is divided into twenty axial lengths to provide axial temperature resolution.

The effect of temperature on the specific heat and thermal conductivity of the various elements is modeled by interpolation of bivariate data using the SINDA "SIV" commands for creating nodes and conductors. The bivariate data for the other transport properties such as air and water are determined using the SINDA "D1DEG" function. Since the air gap spacing is so narrow the heat is primarily transferred by conduction and thermal radiation.

4.4.2.2 Thermal Ratings

Because the lead in the transfer cask gamma shield has the same maximum allowable temperature (620°F) for normal, off-normal, and postulated accident conditions, case 18 (loss of neutron shield) becomes the design basis case for determination of the cask thermal rating. The transfer cask thermal model is used to evaluate the cask material temperatures at various heat loads for this design basis case. The axial heat profiles are applied to the transfer cask thermal model for each of the thermal rating cases using the methodology discussed in Section 4.1.3.2. The two canister axial heat profiles in Figure 4.1-5 are individually applied to the canister shell as boundary conditions. The allowable material temperatures shown in Table 4.3-2 are also applied. The total cask heat load is gradually increased until an allowable material temperature is reached. In all cases, the lead gamma shielding is the controlling material for determination of the transfer cask thermal rating.

The variation of transfer cask heat load with the "max. thermal" profile is shown in Figure 4.4-21. This plot is used for establishing the transfer cask Q_{max} rating. As shown in the figure, the lead shielding reaches its allowable temperature of 620°F (327°C) prior to any other thermal criteria for the cask components being reached. The transfer cask heat load rating which corresponds to this allowable lead shield temperature is 31 kW. However, since the storage cask is more thermally limiting, a transfer cask maximum allowable heat load (Q_{max}) of 28.0 kW is established, consistent with that for the storage cask presented in Section 4.4.1.2.

The variation of transfer cask heat load with the "max. thermal gradient" profile is shown in Figure 4.4-22. This plot is used for establishing the transfer cask $LHGR_{max}$ rating. Similar to the Q_{max} case, the lead shielding reaches its allowable temperature of 620°F (327°C) prior to any other thermal criteria for the cask components being reached. The transfer cask heat load rating which corresponds to this allowable lead shield temperature is 24.0 kW with the "max. thermal gradient" profile. However, since the storage cask is more thermally limiting, a transfer cask maximum allowable heat load of 21.0 kW with the "max. thermal gradient" profile is established, consistent with that for the storage cask presented in Section 4.4.1.2.

The thermal rating results for the transfer cask corresponding to the maximum heat load rating (Q_{max}) and the maximum linear heat generation rate ($LHGR_{max}$) are presented in Table 4.4-9 for the axial heat profiles considered. As with the storage cask discussed in Section 4.4.1.2, the Q_{max} rating is achieved using the "max. thermal" profile and $LHGR_{max}$ rating is achieved with the "max. thermal gradient" profile.

4.4.2.3 Maximum Temperatures

The transfer cask design basis thermal load cases are shown in Table 4.1-4. Steady-state analyses are performed for all the design basis normal conditions, specifically, cases 3, 10, 13, 14, and 15. Transfer cask temperatures for the normal cases (Q_{max} = 28.0 kW with the "max. thermal" profile) are shown in Table 4.4-10 for the transfer cask temperature locations presented in Figure 4.4-20. Table 4.4-11 summarizes the maximum transfer cask material temperatures under normal conditions for each major transfer cask component based on the thermal ratings (Q_{max} and $LHGR_{max}$) for the transfer cask. As can be seen from the tables, the transfer cask component temperatures do not exceed their allowable material temperatures for any case. Note that the maximum temperatures are based on the applicable maximum thermal rating of the transfer cask

only. Transfer cask temperatures under canister specific loading conditions are addressed in the applicable FuelSolutions™ Canister Storage FSARs.

For case 3 (pool removal), the loaded canister and cask annulus are assumed to be filled with pool water (assumed to be at 120°F) and the liquid neutron shield is assumed to be empty. The temperatures presented for case 3 in Table 4.4-10 and Table 4.4-11 assume steady state conditions at the cask rating (Q_{max}=28.0 kW) with no flow through the annulus. Although steady state temperatures at the design basis transfer cask heat load could cause water in the canister cavity and annulus boil, there is no nuclear safety impact. Furthermore, boiling conditions can be avoided by recirculation of water through the annulus. A minimum annulus recirculation flow rate of 2 gpm (100°F inlet temperature) allows the loaded transfer cask to achieve steady state under the assumed case 3 conditions without boiling the water in the annulus or the cask cavity.

4.4.2.4 Minimum Temperatures

The temperatures in the transfer cask components under normal cold conditions are listed in Table 4.4-10 for each case evaluated. Note that the temperatures shown are for the cask thermal rating and therefore do not represent the lowest expected component temperatures.

The low temperature compatibility of the transfer cask components are also evaluated for the bounding load case of 0°F ambient temperature, zero decay heat load, and no insolation. The steady-state temperatures of the transfer cask for this analytically trivial case are 0°F. With the exception of the neutron shield water, the component temperatures are within minimum allowable material temperatures in all cases.

Transient analysis is performed to illustrate the time frame available when operating in freezing weather, as presented in Section 4.5.2.3. A *technical specification* is established, as presented in Section 12.3 of this FSAR, based on a thermocouple temperature which corresponds to a neutron shield water average temperature above freezing based on the bounding transient results for the off-normal cold transfer (case 16b).

4.4.2.5 Maximum Pressure

Because the transfer cask is always vented to atmosphere, pressure within the cask cavity does not need to be evaluated. However, the pressure in the liquid neutron shield is considered. Table 4.4-11 presents the peak and average maximum temperature of the liquid neutron shield fluid at Q_{max} (28.0 kW) for normal conditions. The allowable material temperature shown for the average liquid neutron shield is based on the saturation temperature of water at the design pressure of 45 psig (293°F). The liquid neutron shield is equipped with a pressure relief device set for the design pressure.

The maximum average liquid neutron temperature is 233°F (Table 4.4-11, case 15). This corresponds to a maximum neutron shield pressure of 9 psig, which is well below the design pressure.

4.4.2.6 Maximum Thermal Stresses

The maximum thermal stresses developed in the transfer cask under normal conditions are addressed in Chapter 3.

4.4.2.7 Evaluation of Transfer Cask Performance for Normal Conditions

Figure 4.4-23 presents the radial temperature distribution within the major components of the transfer cask at the various axial locations of the transfer cask at the maximum heat load rating Q_{max} (28.0 kW) under normal hot transfer conditions (case 15). The corresponding axial temperature distribution of key transfer cask components is presented in Figure 4.4-24. Figure 4.4-25 and Figure 4.4-26 present the radial and axial temperature distributions, respectively, for the maximum linear heat generation rate ($LHGR_{max}$ = 0.253 kW/in).

Figure 4.4-27 presents a transfer cask heat balance for normal hot transfer conditions at the maximum heat load rating (Q_{max} = 28.0 kW). As can be seen, heat into the cask comes from the SNF decay heat (28.0 kW) and solar (2.2 kW). Under steady-state conditions, all heat (30.2 kW) is lost passively to ambient.

Results of the steady-state analyses presented in this section demonstrate that the allowable transfer cask material temperatures under normal conditions are not exceeded for the thermal rating concurrent with ambient conditions which envelop those of all sites within the contiguous United States. Therefore, the transfer cask is suitable for transfer of all FuelSolutions™ canister types and fuel loadings with decay thermal ratings which are bounded by the transfer cask thermal ratings summarized in Table 4.1-5.

Table 4.4-9 - Transfer Cask Thermal Ratings

Design Conditions	Q_{max} (kW)	$LHGR_{max}$ (kW/in)
Max. Thermal Profile	28.0	0.204
Max. Thermal Gradient Profile	21.0	0.253
Transfer Cask Thermal Rating	**28.0**	**0.253**

Table 4.4-10 - Transfer Cask Normal System Temperatures at Q_{max}=28 kW [1]

Transfer Cask Component	Temp. Point[2]	Pool Removal (case 3) [3]	Inside Handling (case 10)	Normal Horizontal Transfer		
				Normal Cold (0°F) case 14	Normal Transfer (77°F) case 13	Normal Hot (100°F) case 15
Ram Access	1	233	208	142	218	237
Cover	2	236	208	142	218	237
Top	3	243	215	149	224	243
Cover	4	254	216	149	222	240
	5	306	251	184	250	267
Inner	6	459	334	277	330	344
Shell	7	478	333	281	332	346
	8	370	260	215	273	289
	9	199	138	94	167	186
	10	312	255	188	253	269
Lead	11	454	329	272	325	339
Gamma	12	472	328	276	327	341
Shield	13	366	256	211	269	285
	14	198	138	94	167	186
	15	289	236	167	235	252
Structural	16	416	248	180	242	259
Shell	17	435	245	182	243	259
	18	328	193	141	206	223
	19	192	133	90	164	183
Liquid	20	177	233	149	215	232
Neutron Shield	21	232	238	167	229	245
Shell	22	126	126	89	163	182
Bottom	23	173	126	63	143	164
Cover	24	177	128	74	152	172

Table 4.4-10 Notes:

(1) All temperatures in °F.

(2) Transfer cask temperature points are shown in Figure 4.4-20.

(3) Case 3 results presented for steady state operation.

Table 4.4-11 - Transfer Cask Maximum Material Temperatures for Normal Conditions (1,2)

Cask Component	Case 3(3)	Case 10	Case 13	Case 14	Case 15	Case 15 [$LHGR_{max}$]	Allowable Material Temp.
Canister Shell	531	613	612	586	619	668	800
O-rings	180	129	155	77	174	141	250
Peak Lead	477	334	332	281	345	352	620
Average Lead	401	286	290	234	305	259	620
Peak Neutron Shield Fluid	N/A	243	238	176	254	247	293
Average Neutron Shield Fluid	N/A	215	216	152	233	205	293
RX-277/NS-3	230	202	212	135	231	206	350
Stainless Steel	480	339	337	295	350	359	800
Thermocouple	433	242	240	180	257	233	-

Table 4.4-11 Notes:

(1) All temperatures in °F.

(2) Unless specified otherwise, applied heat loads are 28.0 kW with the "max. thermal" profile and 21.0 kW with the "max. thermal gradient" profile.

(3) Temperatures for Case 3 shown for steady state with the neutron shield filled with air.

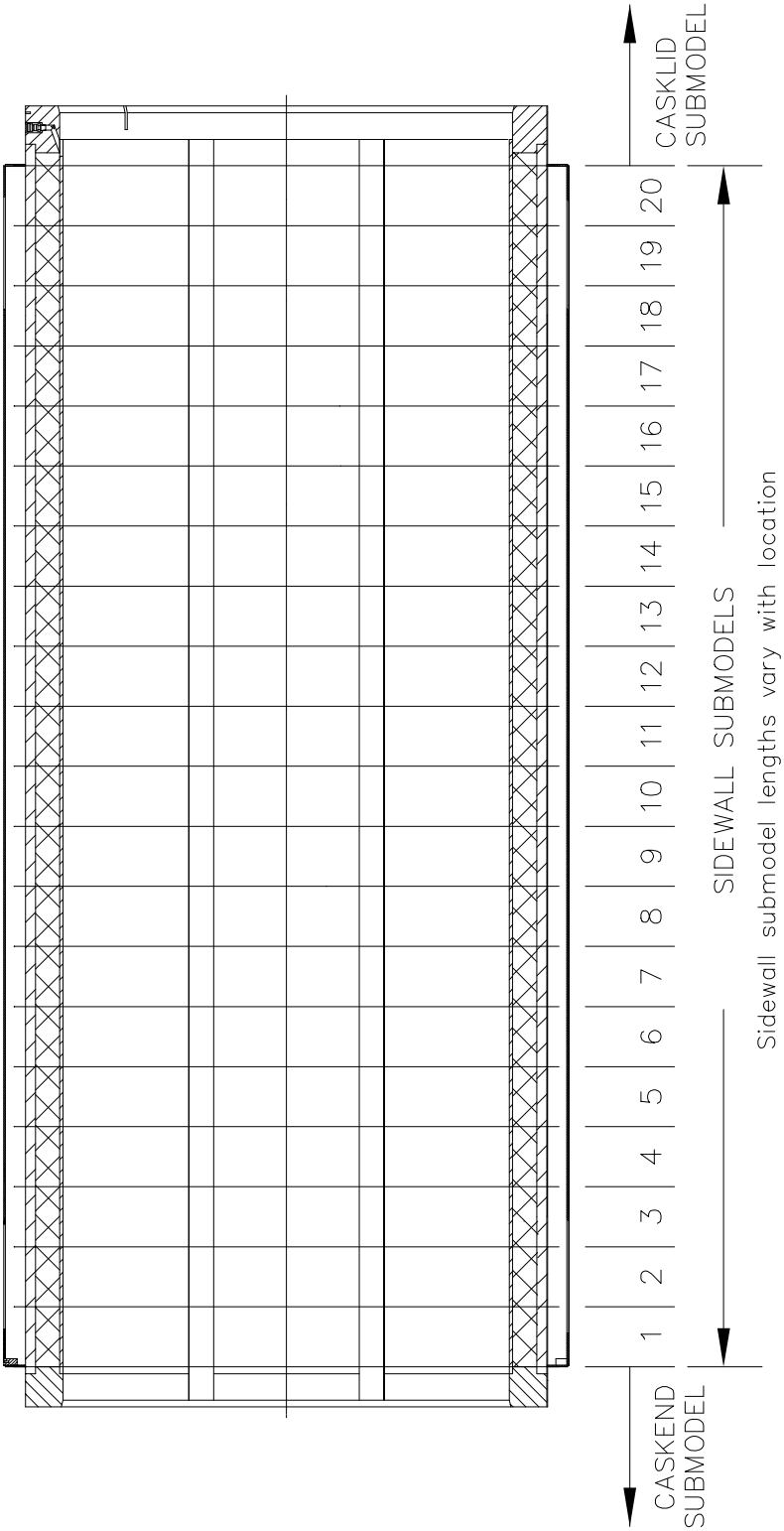

Figure 4.4-14 - Transfer Cask Side Wall Thermal Model

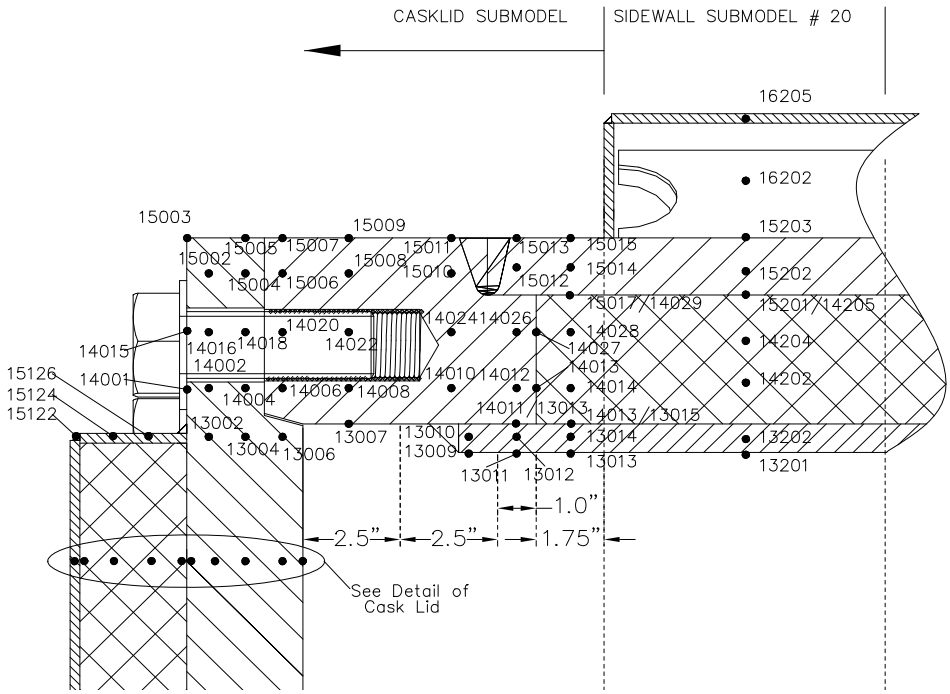

Figure 4.4-15 - Transfer Cask Top End Thermal Model

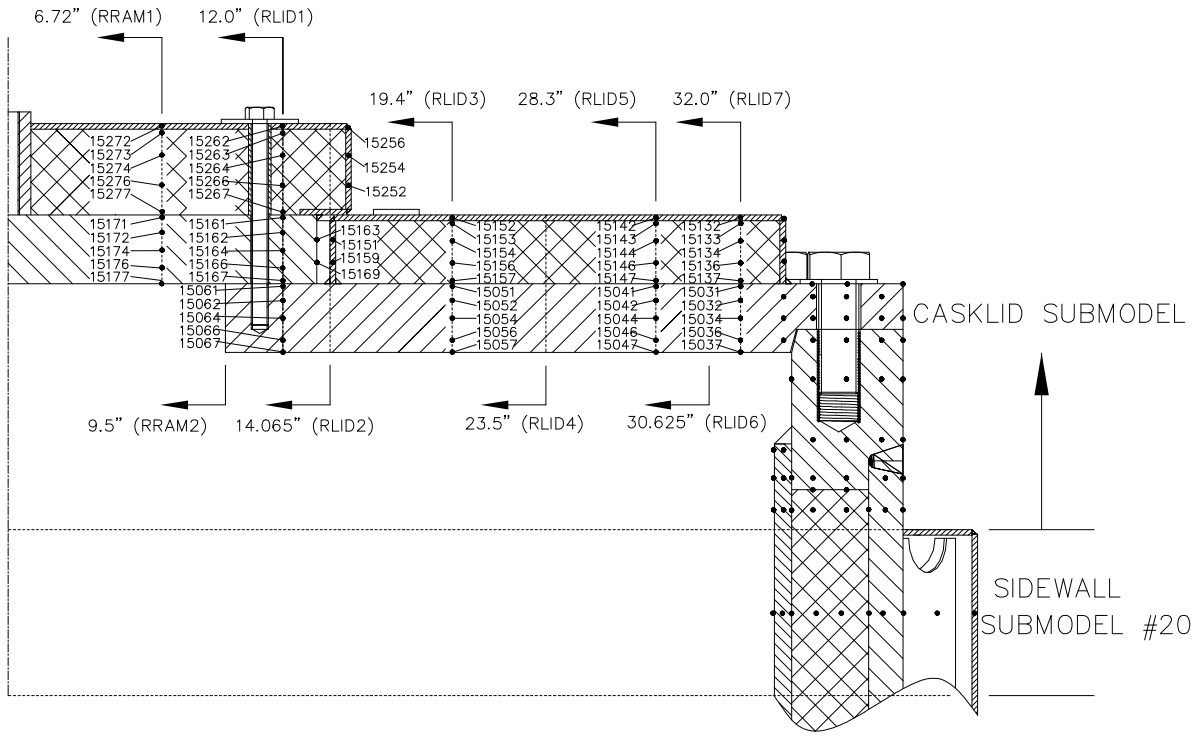

Figure 4.4-16 - Transfer Cask Top End Thermal Model, Lid Detail

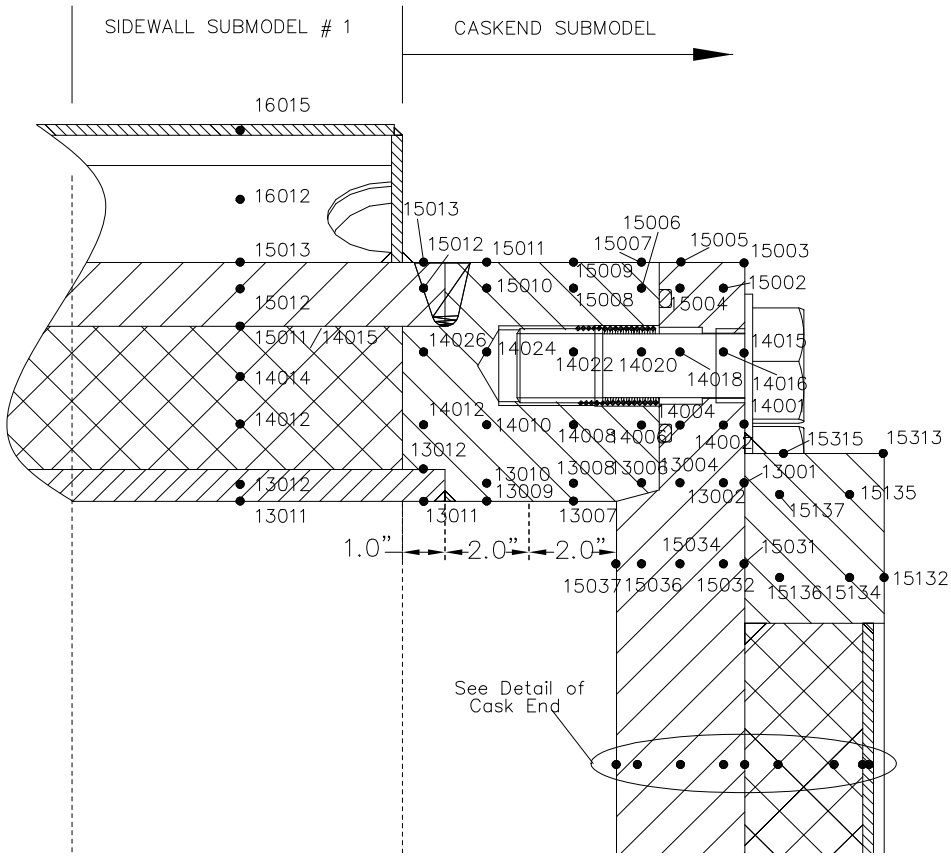

Figure 4.4-17 - Transfer Cask Bottom End Thermal Model

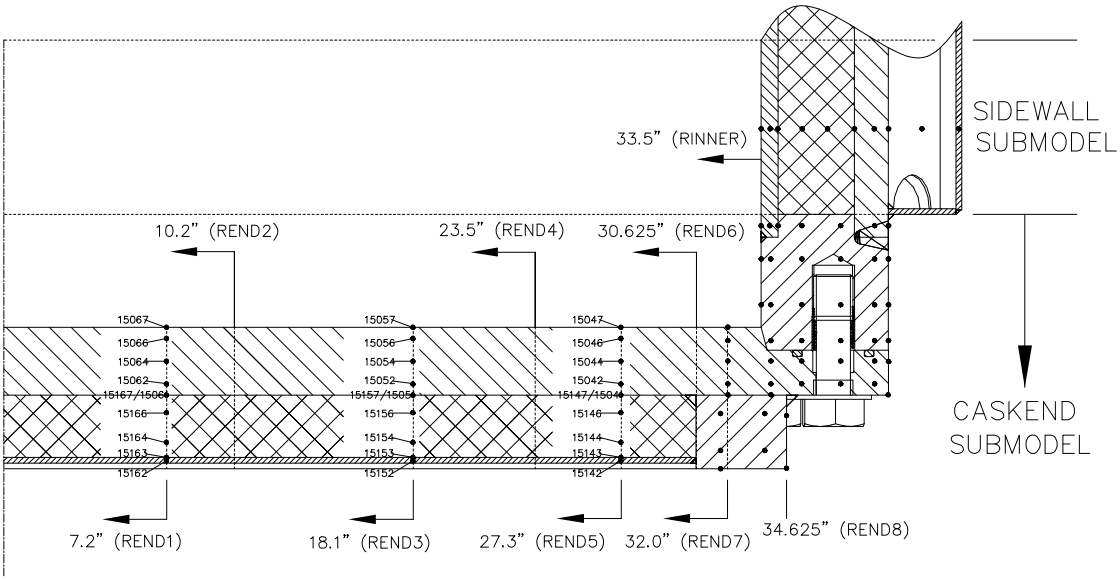

Figure 4.4-18 - Transfer Cask Bottom End Thermal Model, Lid Detail

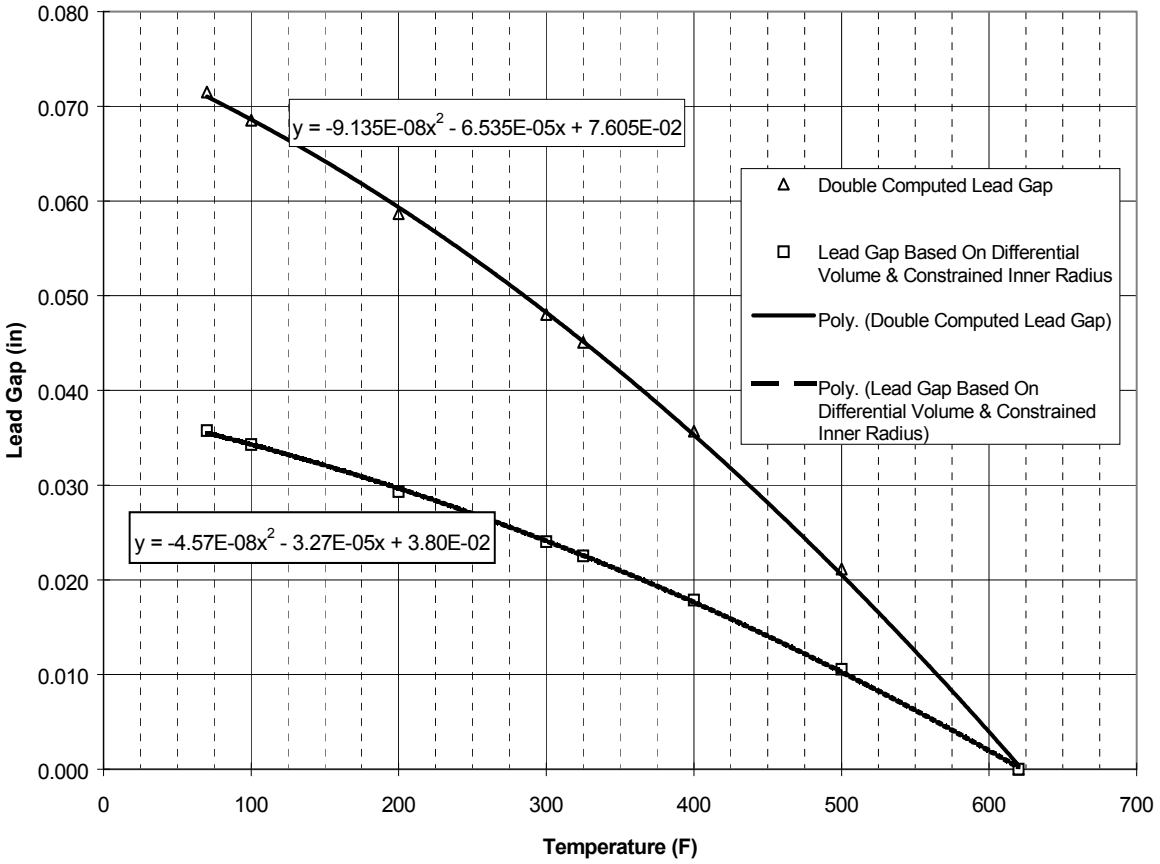

Figure 4.4-19 - Lead Gap Size Variation with Temperature

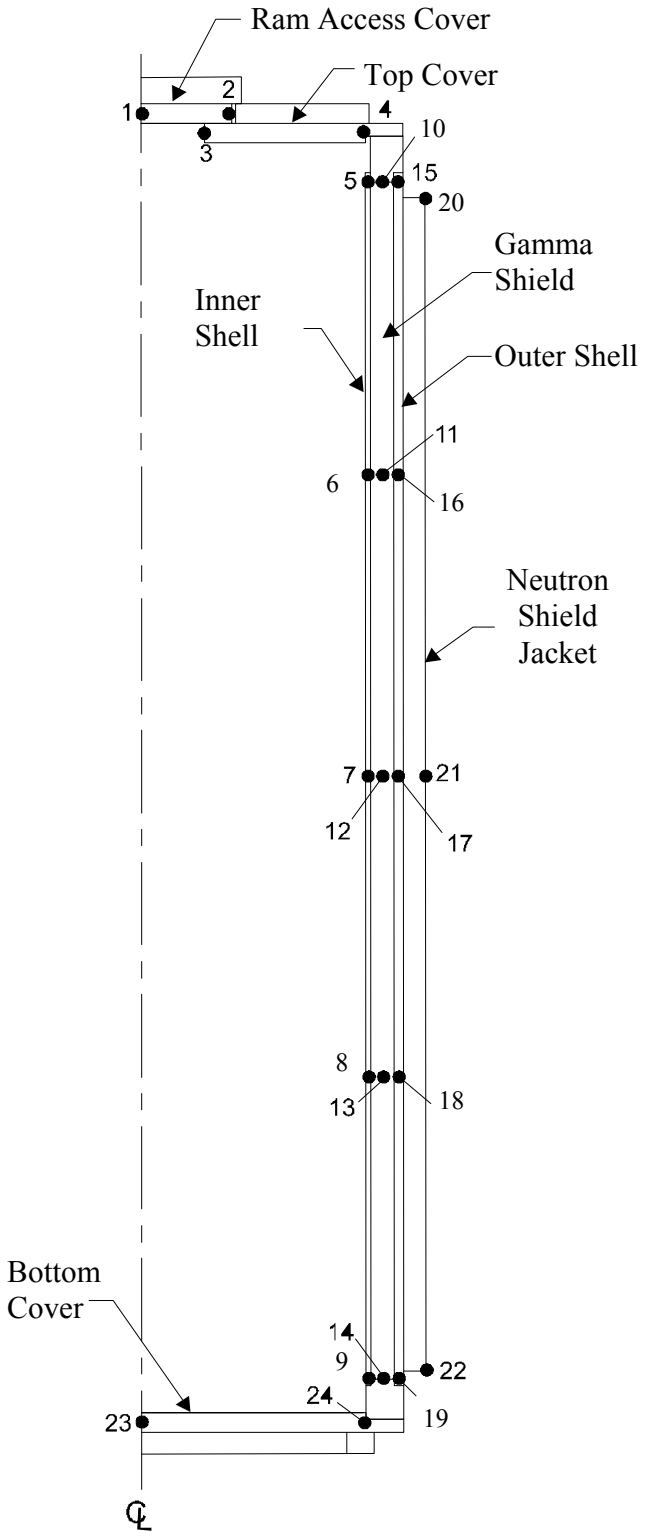

Figure 4.4-20 - Transfer Cask Temperature Points

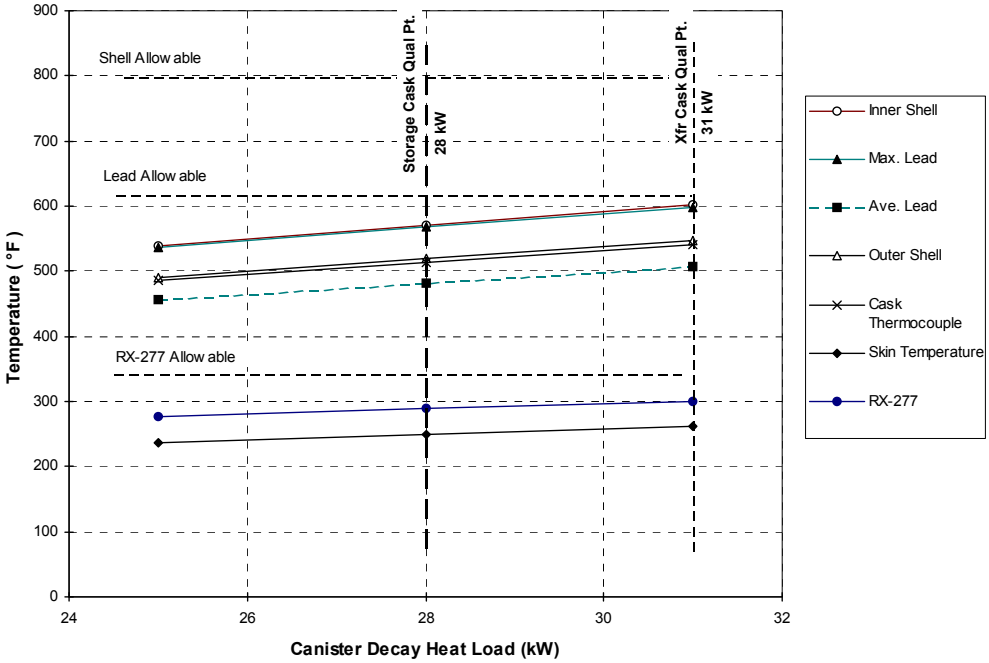

Figure 4.4-21 - Transfer Cask Temperatures vs. Decay Heat Load for Q_{max}

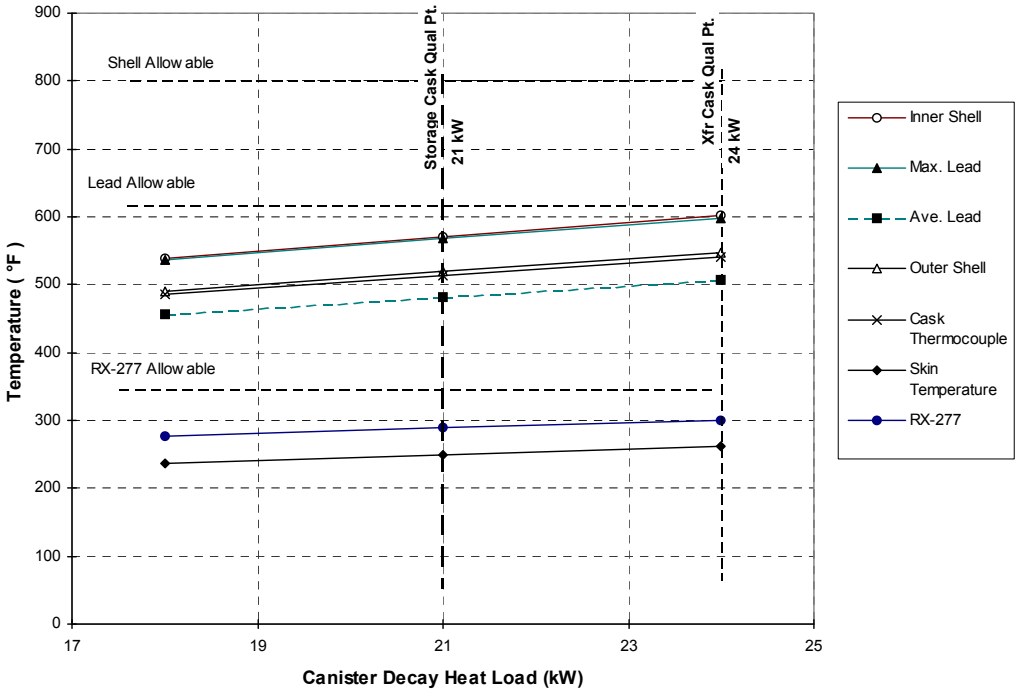

Figure 4.4-22 - Transfer Cask Temperatures vs. Decay Heat Load for $LHGR_{max}$

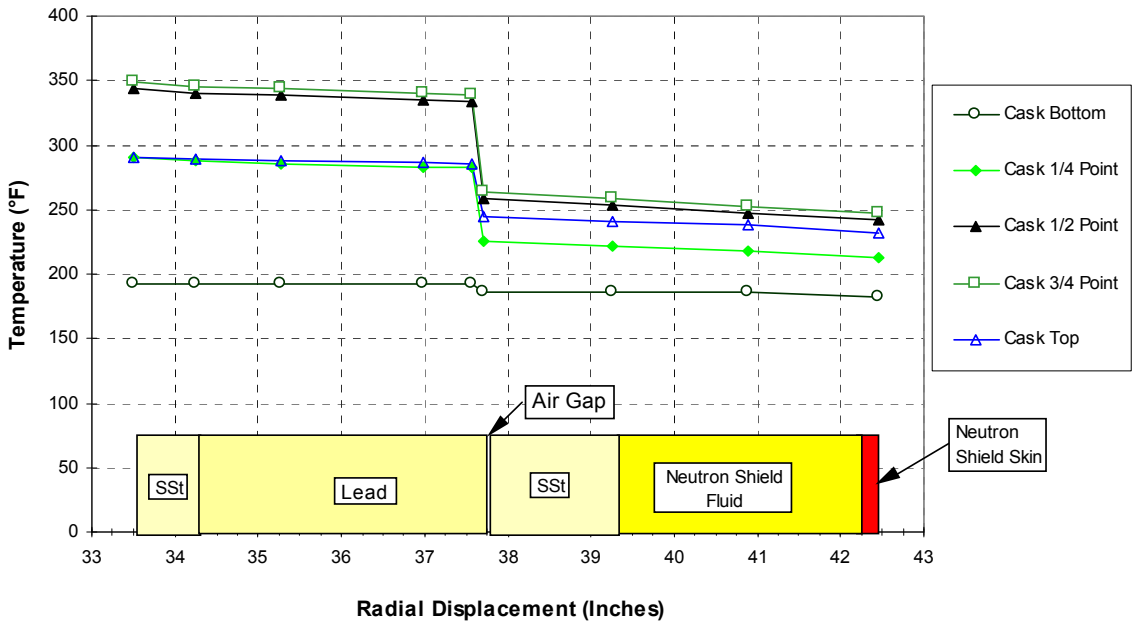

-

Figure 4.4-23 - Radial Temperature Distribution (Case 15, Q_{max}=28.0 kW)

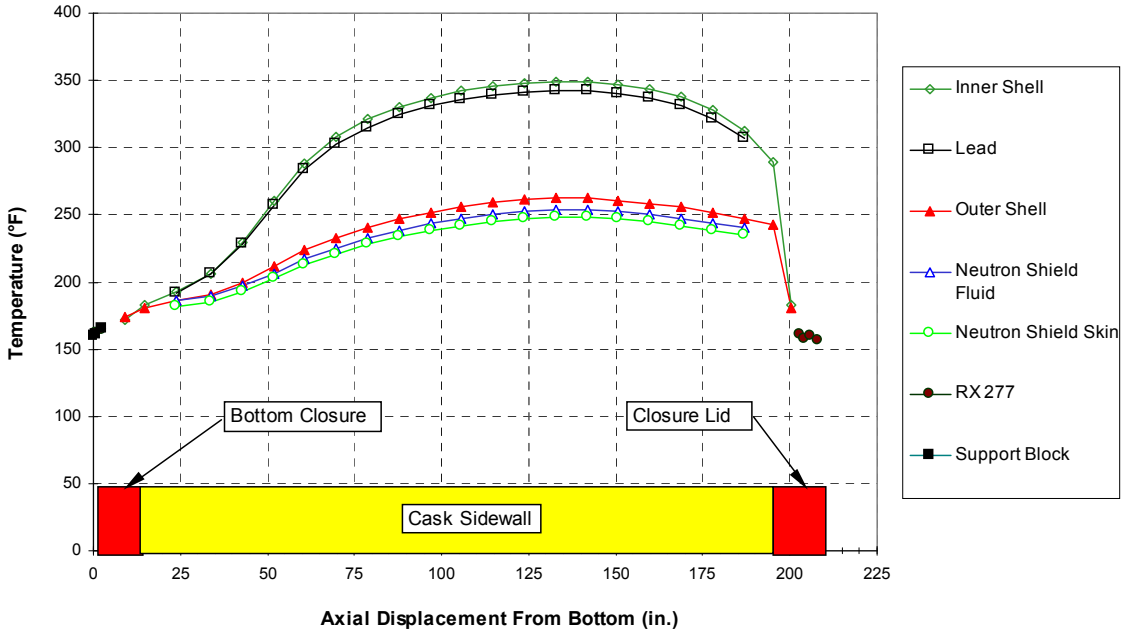

Figure 4.4-24 - Axial Temperature Distribution (Case 15, Q_{max}=28.0 kW)

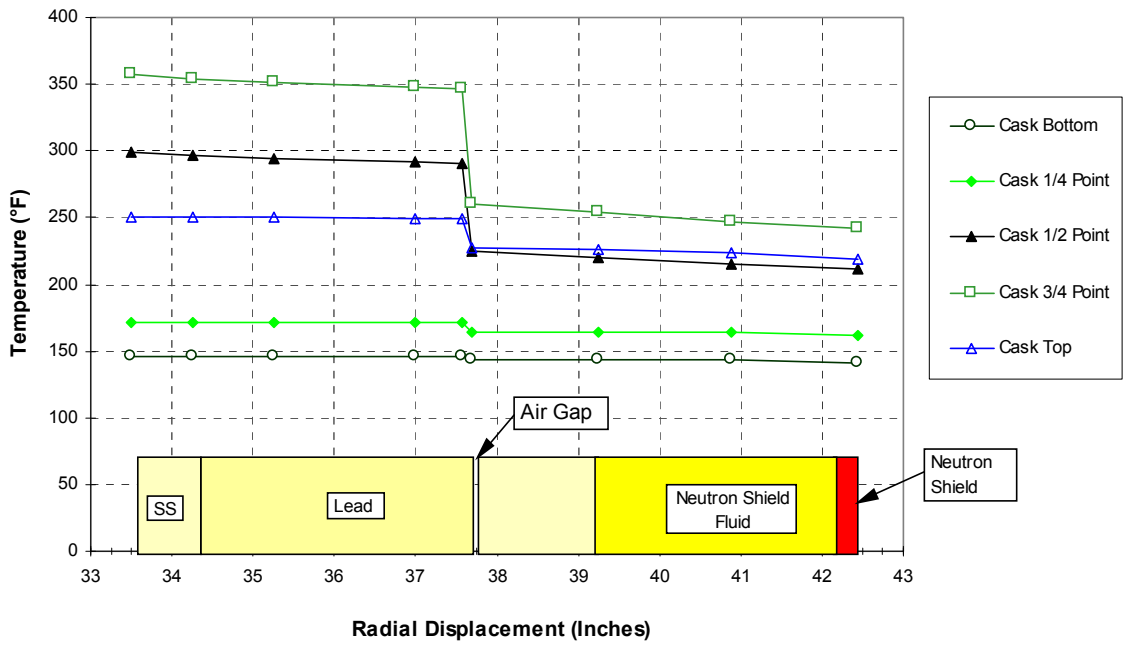

Figure 4.4-25 - Radial Temperature Distribution w/ Max. Gradient Profile (Case 15, $LHGR_{max}$=0.253 kW/in)

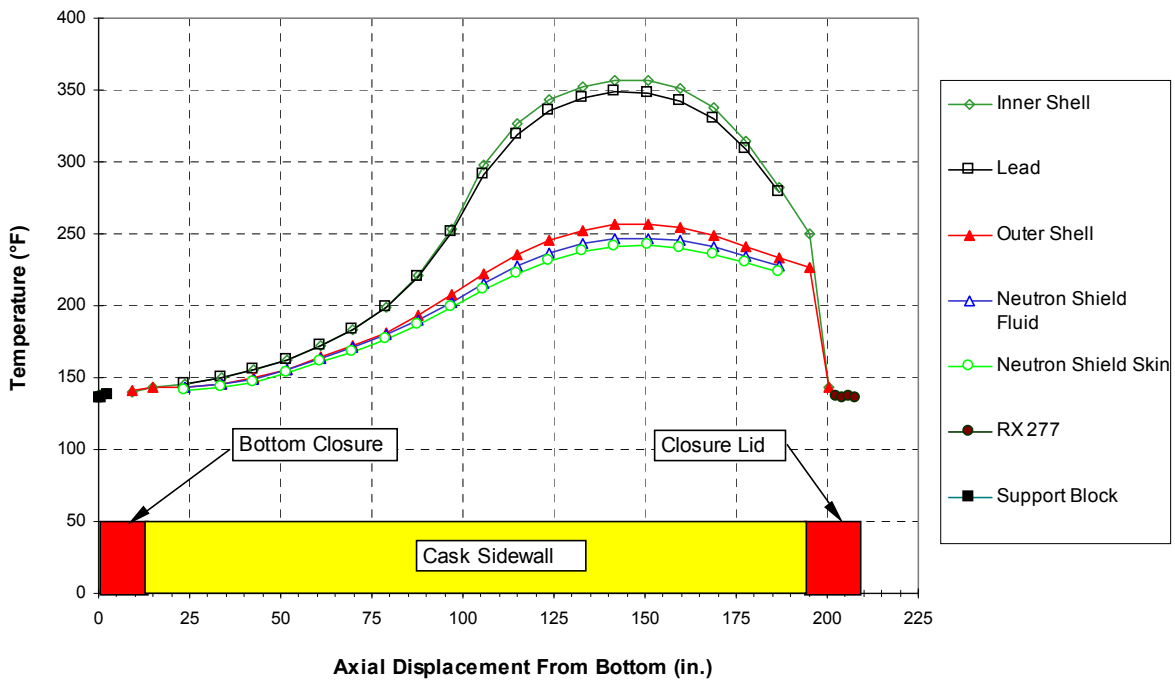

Figure 4.4-26 - Axial Temperature Distribution w/ Max. Gradient Profile (Case 15, $LHGR_{max}$=0.253 kW/in)

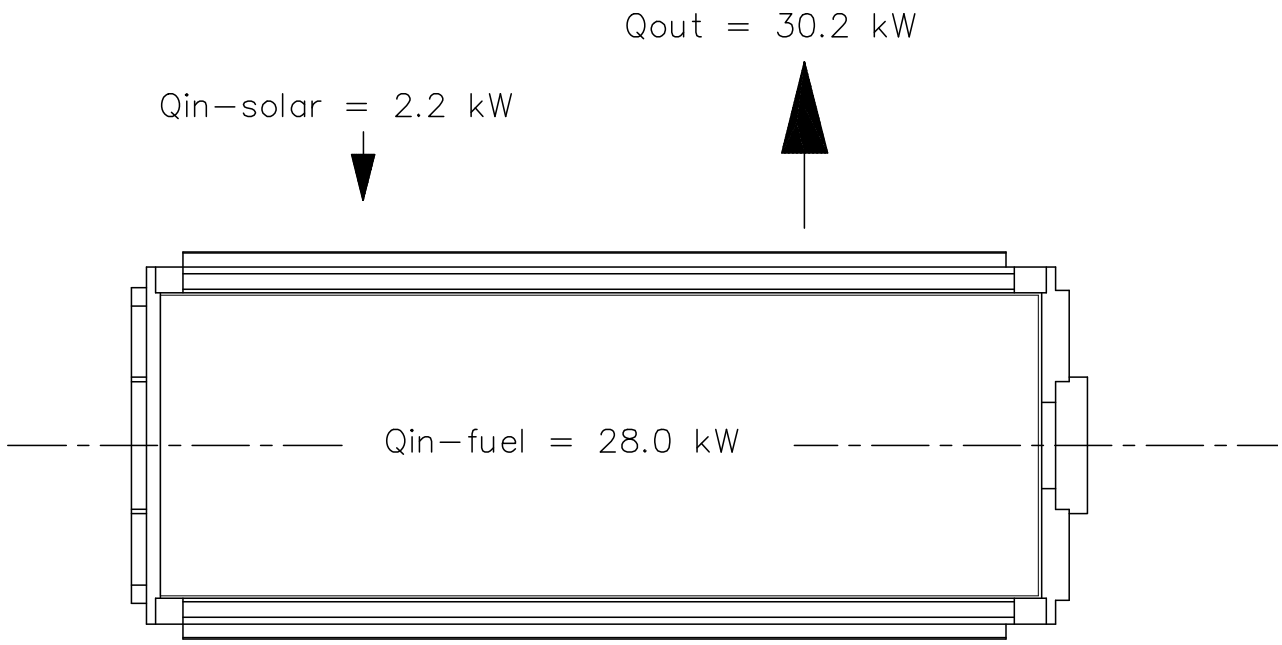

Figure 4.4-27 - Transfer Cask Heat Balance

This page intentionally left blank.

4.5 Thermal Evaluation for Off-Normal Conditions of Storage

4.5.1 Storage Cask

The storage cask off-normal conditions considered in this section include off-normal cold storage (case 8), off-normal hot storage (case 9), and canister horizontal transfer (case 13). The applicable storage cask operating conditions for these cases are summarized in Table 4.1-1 and Table 4.1-3.

4.5.1.1 Thermal Model

The thermal model used in the evaluation of the storage cask in the vertical orientation with all vents open for off-normal ambient conditions is the same as that used for the normal conditions (see Section 4.4.1.1). The evaluations of the storage cask in the vertical orientation with postulated all vents blocked and fire accident conditions are included in the accident conditions discussion (Section 4.6).

The storage cask horizontal orientation is considered an off-normal condition since it exists only during horizontal transfer operations and normally only for short durations. The storage cask vertical model is modified slightly to account for this effect. The modifications include the following:

- Insolation is modified due to the surface orientation change (see Table 4.1-3).
- Natural convection axial air flow through the inlet vents, dual annulus, and outlet vents is modified to consider the reduced buoyancy height from the bottom of canister to mean height of the air outlet vents. A mean gas density over the revised buoyancy height is also used. Resulting axial air flow in the horizontal configuration is substantially reduced from the normal vertical condition.
- Natural convection on the exterior concrete is modified for the horizontal orientation.
- Transient heat transfer analysis is performed instead of steady-state analysis.

The convection flow pattern in the horizontal storage cask is shown in Figure 4.5-1. During the horizontal canister transfer operational sequence, the top cover may be removed, the inlet vents may be open, and the vertically oriented outlet vents (located at 337.5° and 67.5° azimuths) may be open. The horizontally oriented outlet vents (157.5° and 247.5° azimuths) may be blocked with temporary shielding during horizontal canister transfer. Since the top end of the canister is located near the bottom of the cask shield ring which blocks the annulus, flow across the top of the canister is reduced. Thus, the natural convection air flow within the storage cask is reduced during horizontal canister transfer operations, even if the top cover is removed and the vertically oriented outlet vents remain open.

Ambient air enters the horizontal cask through the 36-inch diameter bottom inlet duct through the center of the cask. The air flow divides into two main streams, one flowing upward, as it's heated by the canister, and one flowing downward due to the higher density of the cooler inlet air. Each stream turns horizontally into the cask annular gaps, further dividing between the inner and outer annuli created by the thermal shields. Axial flow through the dual annuli continues until the air flow combines beyond the thermal shields in the outlet plenum, flows

circumferentially around the top of the canister, and exits the cask through the two upward facing outlet vents at (337.5° and 67.5° azimuths). The reduced stack height, increased losses due to flow combination in the outlet plenum, and flow losses due to the use of only two of the four outlet vents significantly reduce the natural convection axial air flow through the cask.

The storage cask is supported within the cask upender/downender J-skid during horizontal operations. The thermal effects of the skid are ignored for analysis purposes. Although local cask surface radiation and convection may be impacted by the J-skid, the contact with the large steel skid at cooler ambient temperatures dissipates heat locally from the cask through conduction. These effects may result in lower local temperatures, however the effects on the peak concrete temperatures are negligible.

Natural convection at the cask exterior surface also takes place for the horizontal cask and differs from that of the vertical cask. For natural convection induced by a horizontal cylinder heat source, the average heat transfer coefficient over the entire circumference of the cylinder can be evaluated using:[16]

$$\mathrm{Nu_D} = \frac{\mathrm{hD}}{\mathrm{k}} = \left\{ 0.60 + \frac{0.387\mathrm{Ra_D}^{1/6}}{\left[1 + (0.559/\mathrm{Pr})^{9/16}\right]^{8/27}} \right\}^2 ; \qquad 10^{-5} \le Ra_D \le 10^{12}$$

where D is the outside diameter of the storage cask, h is the convection heat transfer coefficient, and k is the air thermal conductivity.

For the horizontal transient case, the storage cask short-term allowable concrete temperatures are limiting.

4.5.1.2 Maximum Temperatures

Maximum storage cask temperatures are presented below for off-normal ambient conditions and horizontal canister transfer conditions.

For the off-normal ambient conditions, steady-state analysis shows that the short-term allowable concrete temperature of 350°F is not exceeded during storage operations, provided that the storage cask vent screens are not obstructed. Periodic monitoring of the storage cask, by either visual inspection of the vent screens or monitoring of the liner thermocouple temperature, assures that prolonged obstruction of the storage cask vent screens does not cause the storage cask temperatures to exceed the short-term allowable temperatures during off-normal ambient conditions. A separate *technical specification* in Section 12.3 of each canister storage FSAR establishes the periodic surveillance intervals and thermocouple temperature limits to indicate proper cask operation. For horizontal storage cask operation, transient analyses are performed. A *technical specification* in Section 12.3 of each canister storage FSAR provides for monitoring of the liner thermocouple during horizontal transfer operations, based on correlation of the maximum short-term allowable concrete temperature (350°F) to the thermocouple reading.

4.5.1.2.1 Off-Normal Ambient Conditions

As discussed in Section 4.4.1.2, the maximum thermal rating for the storage cask is established based on normal operating conditions. The storage cask is rated for a maximum heat load rating (Q_{max}) of 28.0 kW and a maximum linear heat generation rate ($LHGR_{max}$) of 0.253 kW/in. These cask thermal ratings are applied for off-normal thermal analysis. For steady-state off-normal ambient conditions, the off-normal cold storage (-40°F ambient, case 8) and off-normal hot storage (125°F ambient, case 9) conditions are evaluated. The storage cask operating conditions for off-normal ambient storage conditions are summarized in Table 4.1-1 and Table 4.1-3 for the applicable cases.

The storage cask off-normal steady-state system temperatures are presented in Table 4.5-1 for the temperature points shown in Figure 4.4-8 at the maximum heat load rating (Q_{max}=28.0 kW) with the "max. thermal" profile. The corresponding maximum component temperatures are presented in Table 4.5-2 for Q_{max}. System temperatures at $LHGR_{max}$ (0.253 kW/in) with the "max. thermal gradient" profile are presented in Table 4.5-3 with corresponding maximum material temperatures presented in Table 4.5-4. Note that all material temperatures are below their allowable values.

4.5.1.2.2 Horizontal Storage Cask Conditions

Since steady-state analysis of the storage cask in the horizontal mode would result in surface concrete temperatures above the short-term allowable material temperature (350°F), a transient analysis is performed. The results of this analysis are used to establish the operational *technical specification* limit contained in Section 12.3 of each canister storage FSAR, based on the liner thermocouple temperature corresponding to the allowable material temperatures. The storage cask operating conditions for canister horizontal transfer are summarized in Table 4.1-1 and Table 4.1-3 for case 13. Only the limiting horizontal case, canister unloading, is considered. For the unloading case, the storage cask initial temperatures for the horizontal transient analysis are taken as the steady-state temperatures at the thermal rating for the normal storage condition (77°F ambient). These unloading initial conditions are conservative since the cask decay heat generation decreases with storage time, and unloading operations will most likely be performed following long-term storage.

The storage cask temperatures for the horizontal storage cask at Q_{max} (28.0 kW with "max. thermal" profile) and 41 hours into the transient are presented in Table 4.5-1 for the temperature points shown in Figure 4.4-8. Storage cask temperature at $LHGR_{max}$ (0.253 kW/in with "max. thermal gradient" profile) and 41 hours into the transient are presented in Table 4.5-3. Maximum component temperatures are presented in Table 4.5-2 for the maximum heat load rating (Q_{max}= 28 kW) and Table 4.5-4 for the maximum linear heat generation rate ($LHGR_{max}$= 0.253 kW/in). Note that all temperatures are below their applicable allowable material temperatures. For the horizontal unloading conditions (case 13b) short-term allowable concrete surface temperatures are achieved after 41 hours for both the Q_{max} and $LHGR_{max}$ ratings. The transient time duration is more than adequate to complete horizontal canister operations, assuming that all systems and equipment are functioning properly.

Figure 4.5-6 presents the storage cask surface concrete temperature as a function of time for horizontal loading and unloading. The corresponding storage cask concrete and liner thermocouple temperatures are also displayed over the transient time period. From Table 4.5-2

and Table 4.5-4, the limiting liner thermocouple reading (271°F) occurs for $LHGR_{max}$ with the "max. thermal gradient" profile. Figure 4.5-6 presents the correlation of both the concrete and liner thermocouples with the maximum surface concrete temperature at $LHGR_{max}$ during the unloading transient. The liner thermocouple tracks more closely to the maximum concrete temperature than the concrete thermocouple. This liner thermocouple temperatures of 312°F and 271°F for Q_{max} and $LHGR_{max}$, respectively, correlate to the maximum short-term allowable concrete temperature (350°F) through the analysis presented above. The corresponding storage cask liner thermocouple temperature limits necessary to protect the FuelSolutions™ canister materials during horizontal transfer operations are addressed in the respective FuelSolutions™ Canister Storage FSARs. Since long-term canister allowable material temperatures are more limiting than short-term cask allowable material temperatures, the cask is also protected by the canister *technical specifications*.

The storage cask temperature gradients at the 25 hour point in the unloading transient are used for the structural analysis presented in Section 3.5.3 of this FSAR. This transient time period bounds the corresponding transient time period at which FuelSolutions™ canister material allowable temperatures are reached during the design basis unloading case, as presented in Section 4.5 of each canister storage FSAR. Due to bounding time period and thermal ratings, storage cask thermal gradients from the storage cask analysis presented in this section bound the corresponding thermal gradients from the canister analyses.

Should equipment mechanical difficulties occur during horizontal canister transfer operations result in an extended period with the loaded storage cask in the horizontal orientation, mitigating actions are required prior to exceeding the short-term allowable concrete temperature, as correlated to the monitored thermocouple temperature. Mitigating actions include correcting the problem and uprighting the cask or returning the canister to the transfer cask. For the canister unloading case, an extended period in the horizontal orientation should be avoided.

4.5.1.3 Minimum Temperatures

The temperature in the storage cask components under off-normal cold conditions are listed in Table 4.5-1 for Q_{max} and Table 4.5-3 for $LHGR_{max}$. The temperatures shown are for the storage cask thermal rating and therefore do not represent the lowest expected component temperatures.

The low storage cask components are also evaluated for the bounding low temperature load case of -40°F ambient temperature, zero decay heat load, and no insolation. The steady-state temperatures of the storage cask for this analytically trivial case are -40°F. The component temperatures are within their minimum allowable material temperature in all cases, as discussed in Section 3.1.2.

4.5.1.4 Maximum Thermal Stresses

The storage cask maximum thermal stresses during off-normal conditions are addressed in Section 3.6.1.

4.5.1.5 Evaluation of Storage Cask Performance for Off-Normal Conditions

Figure 4.5-2 presents the radial temperature distribution within the storage cask at the limiting axial location for off-normal ambient conditions and maximum heat load rating (Q_{max}= 28.0

kW). Figure 4.5-3 presents the corresponding storage cask axial temperature distributions under off-normal hot storage conditions for Q_{max}= 28 kW. Figure 4.5-4 presents the radial temperature distribution at 41 hours into the horizontal unloading transient for $LHGR_{max}$. Figure 4.5-5 presents the corresponding axial temperature distribution for the horizontal unloading case (41 hours, $LHGR_{max}$ = 0.253 kW/in).

Results of the steady-state analyses demonstrate that the storage cask short-term allowable material temperatures under off-normal ambient conditions are not exceeded for the cask thermal rating concurrent with ambient conditions which envelop those at all sites within the contiguous United States. FuelSolutions™ canister material long-term allowable temperatures are more limiting than cask short-term allowable temperatures during horizontal conditions. As a result, *technical specifications* in Section 12.3 of the respective canister storage FSARs for monitoring the liner thermocouple temperature provide assurance that short-term allowable cask material temperatures are not exceeded. Therefore, the storage cask is suitable for the dry storage of all FuelSolutions™ canisters and their qualified SNF assemblies with decay heat loads which are bounded by the storage cask thermal ratings summarized in Table 4.1-5. Over the long-term storage period, the SNF decay heat decreases, thus increasing the margins relative to the allowable material temperatures. The thermal qualification of each FuelSolutions™ canister is provided in Chapter 4 of the respective FuelSolutions™ Canister Storage FSAR.

Table 4.5-1 - Storage Cask Off-Normal System Temperatures at Q_{max} (28.0 kW)[1]

Storage Cask Component	Point[2]	Off-Normal Cold Storage (-40°F)[3]	Off-Normal Hot Storage (125°F)[3]	Horizontal Unloading (41 hrs)[3]
Top Cover	1	-12	183	161
	2	36	236	229
Shield Ring	3	-9	196	175
Cask Side Wall	4	-21	173	151
	5	12	228	338
	6	-10	186	170
	7	-21	164	138
	8	-3	205	298
	9	-17	176	155
	10	-24	160	130
	11	-28	157	150
	12	-31	150	112
	13	-33	145	108
Bottom Section	14	-38	132	88
	15	-36	140	101
	16	-37	134	86
	17	-36	139	93
Tierods	6	-10	186	170
Support Tubes	18	-39	129	90

Table 4.5-1 Notes:

(1) All temperatures are in °F.

(2) Storage cask temperature points are shown in Figure 4.4-8.

(3) Off-normal system temperatures presented for Qmax. (28 kW)

Table 4.5-2 - Storage Cask Maximum Temperatures at Q_{max} for Off-Normal Ambient Conditions[1,2]

Component/ Location	Off-Normal Cold Storage (-40°F)	Off-Normal Hot Storage (125°F)	Horizontal Unloading (@41 hrs)	Allowable Material Temperature
Canister Shell	290	473	662	800
Inner Air Gap	57	255	595	n/a
Thermal Shield	94	326	553	600
Outer Air Gap	35	237	445	n/a
Liner	12	229	349	700
Surface Concrete	12	228	348	350
Average Concrete	-18	173	158	n/a
Liner Thermocouple	0	210	312	n/a
Concrete Thermocouple	-15	178	159	n/a

Table 4.5-2 Notes:

(1) All temperatures are in °F.

(2) Heat load for Qmax is 28 kW with the "max. thermal" profile.

Table 4.5-3 - Storage Cask Off-Normal System Temperatures at $LHGR_{max}$ (0.253 kW)[1]

Storage Cask Component	Point[2]	Off-Normal Cold Storage (-40°F)[3]	Off-Normal Hot Storage (125°F)[3]	Horizontal Unloading (41 hrs)[3]
Top Cover	1	-13	182	151
	2	36	233	181
Shield Ring	3	-10	194	163
Cask Side Wall	4	-23	172	147
	5	8	220	321
	6	-12	183	166
	7	-23	163	137
	8	-10	197	243
	9	-21	171	144
	10	-27	158	127
	11	-36	137	100
	12	-36	139	97
	13	-37	139	101
Bottom Section	14	-39	130	86
	15	-38	136	98
	16	-39	131	85
	17	-38	135	90
Tierods	6	-12	183	166
Support Tubes	18	-40	128	89

Table 4.5-3 Notes:

(1) All temperatures are in °F.

(2) Storage cask temperature points are shown in Figure 4.4-8.

(3) Off-normal system temperatures presented for LHGRmax. (0.253 kW/in).

Table 4.5-4 - Storage Cask Maximum Temperatures at $LHGR_{max}$ for Off-Normal Conditions[1,2]

Component/ Location	Off-Normal Cold Storage (-40°F)	Off-Normal Hot Storage (125°F)	Horizontal Unloading (@41 hrs)	Allowable Material Temperature
Canister Shell	360	528	702	800
Inner Air Gap	43	237	601	n/a
Thermal Shield	121	354	577	600
Outer Air Gap	26	223	450	n/a
Liner	9	225	349	700
Surface Concrete	8	225	347	350
Average Concrete	-23	166	144	n/a
Liner Thermocouple	-5	205	271	n/a
Concrete Thermocouple	-19	175	152	n/a

Table 4.5-4 Notes:

(1) All temperatures are in °F.

(2) Heat load for LHGRmax 0.253 kW/in based on 21 kW with the "max. thermal gradient" profile.

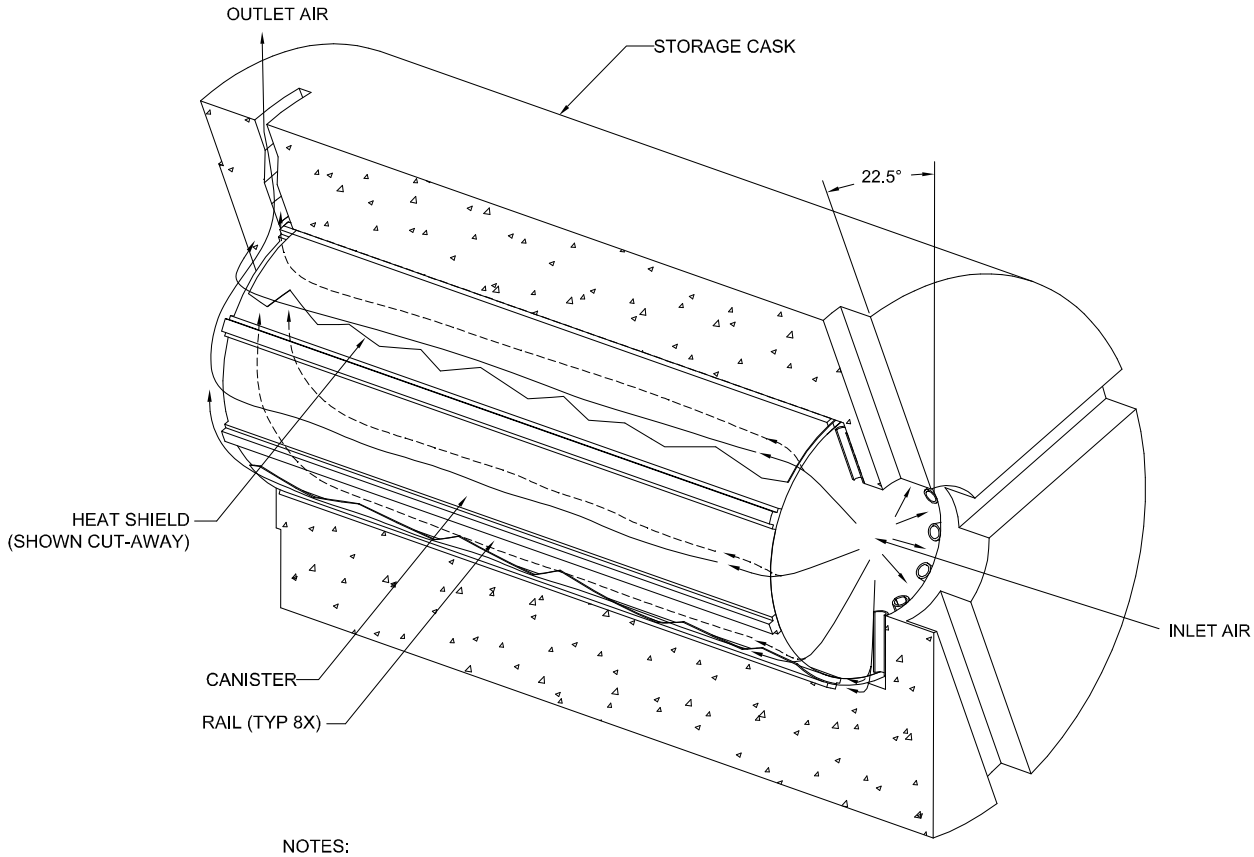

NOTES:
1. AIR FLOWING ON THE OUTER SURFACE OF THE HEAT SHIELD IS SHOWN AS A CONTINUOUS LINE.
2. AIR FLOWING IN THE ANNULAR REGION BETWEEN THE CANISTER AND THE HEAT SHIELD IS SHOWN AS A DASHED LINE.
3. INNER STEEL LINER, BOTTOM LINER, AND STEEL SHIELD PLUG ARE NOT SHOWN.

Figure 4.5-1 - Storage Cask Horizontal Convection

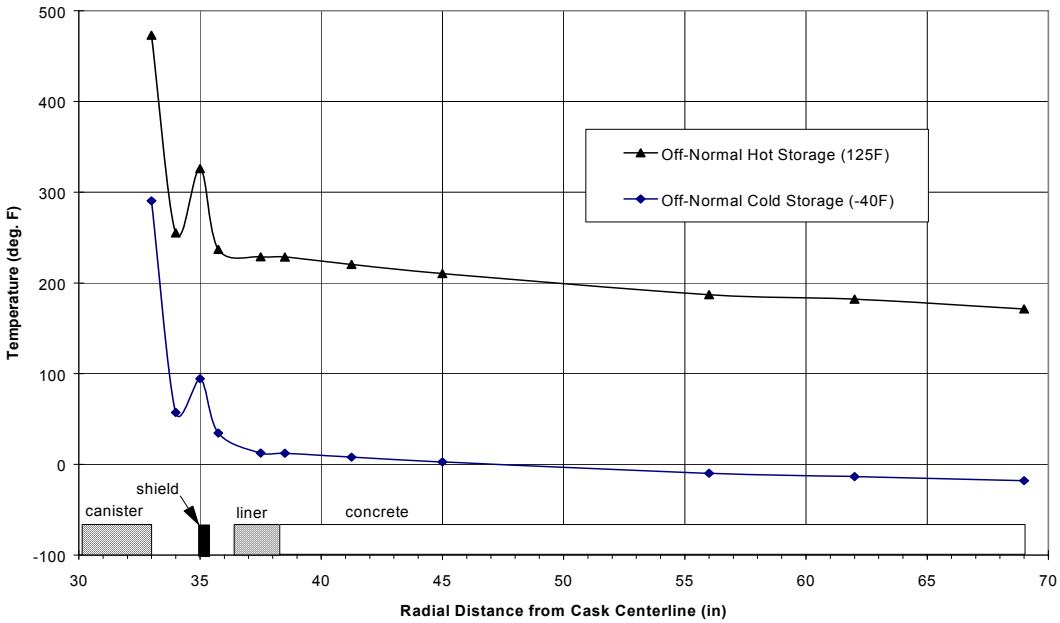

Figure 4.5-2 - Storage Cask Off-Normal Radial Temperatures at Q_{max}=28.0 kW

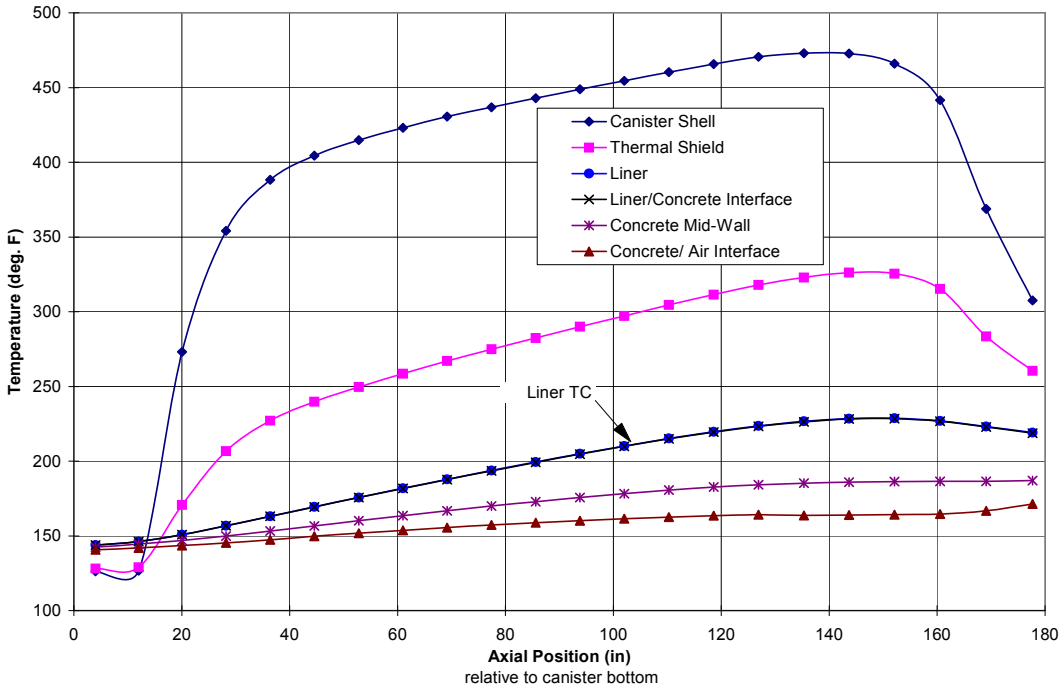

Figure 4.5-3 - Storage Cask Off-Normal Axial Temperatures (Q_{max}=28 kW)

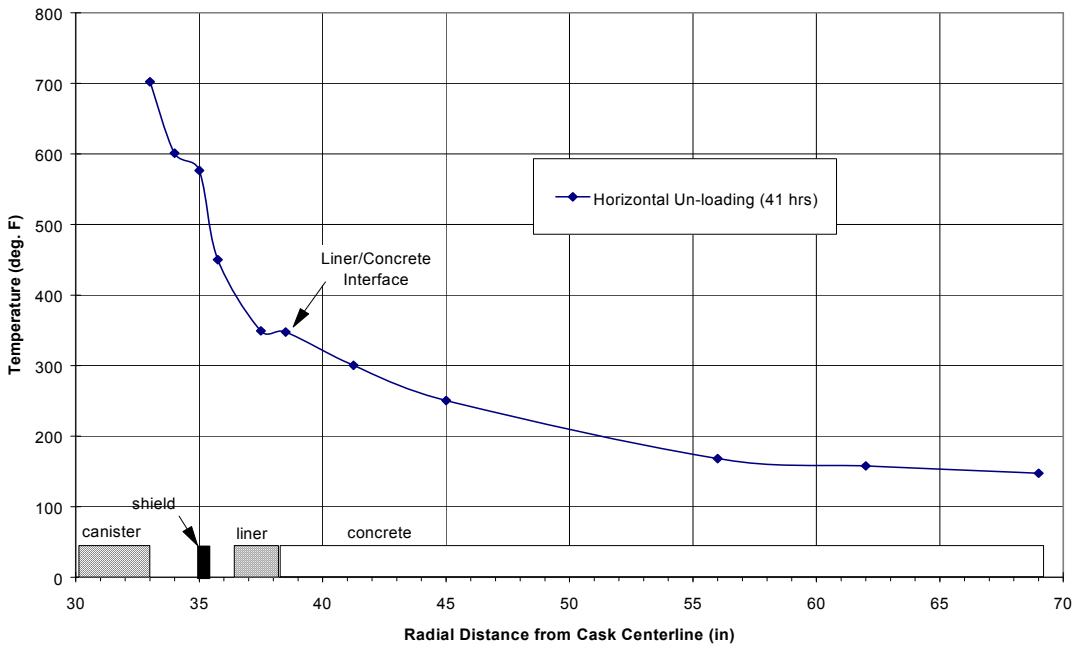

Figure 4.5-4 - Storage Cask Horizontal Unloading Transient Radial Temperatures ($LHGR_{max}$ - 0.253 kW/in, 41 hours)

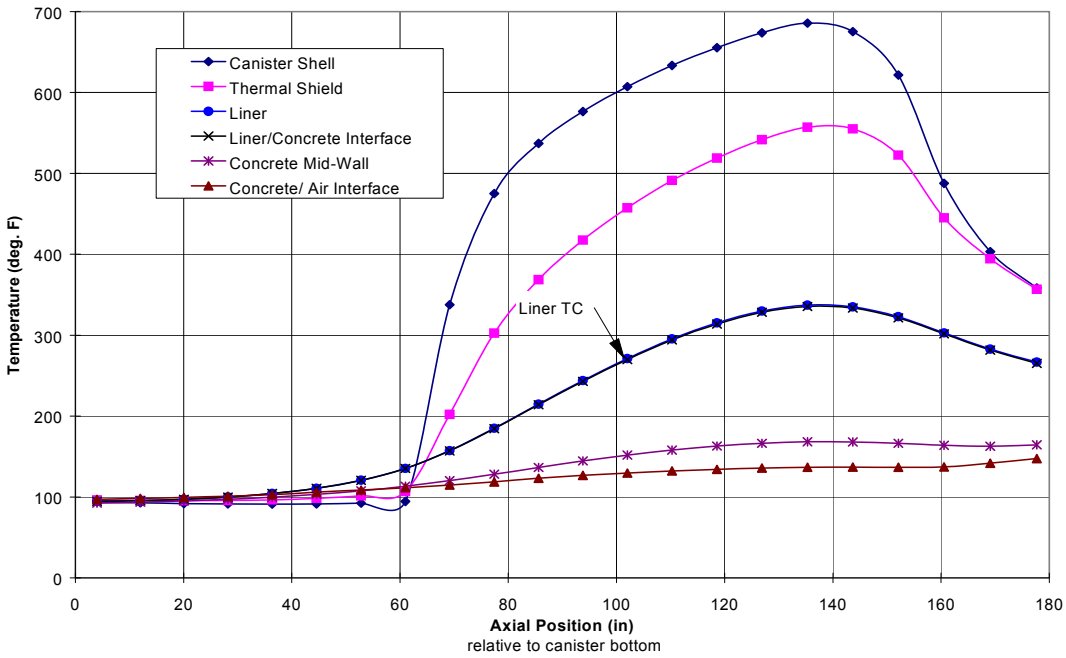

Figure 4.5-5 - Storage Cask Horizontal Axial Temperatures ($LHGR_{max}$ = 0.253 kW/in, 41 hrs)

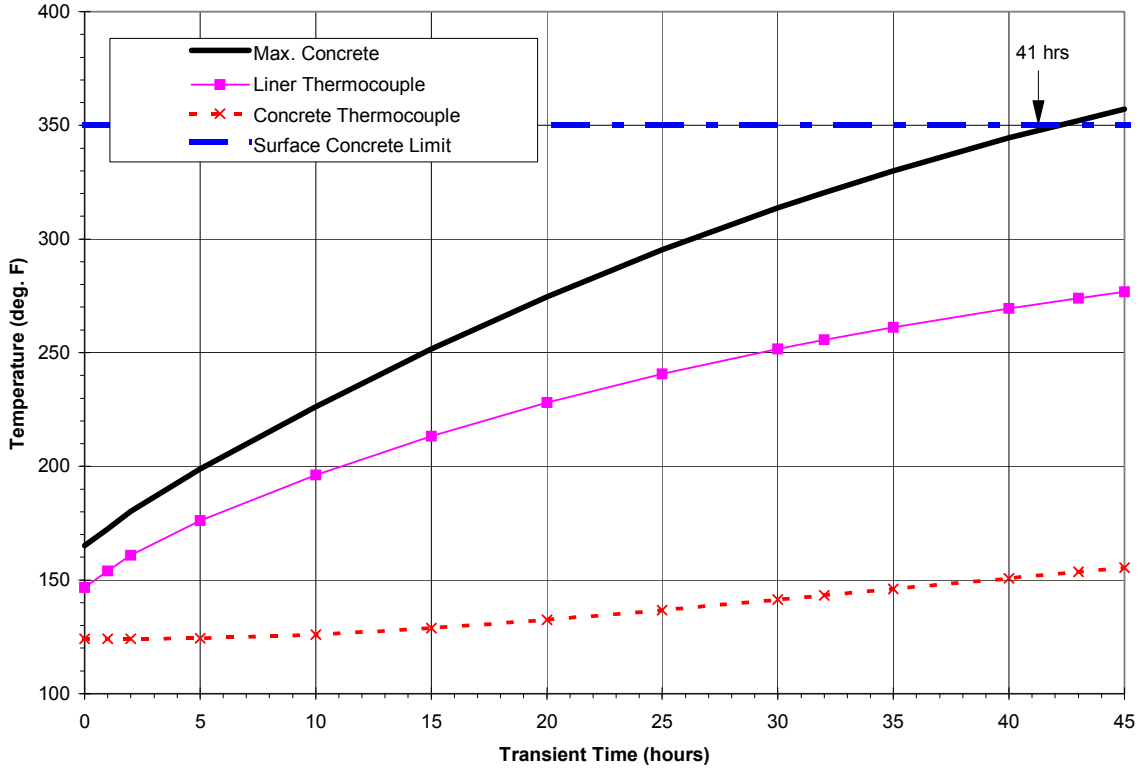

Figure 4.5-6 - Horizontal Storage Cask Max. Surface Concrete Temperature Correlation to Thermocouples ($LHGR_{max}$=0.253kW/in)

4.5.2 Transfer Cask

4.5.2.1 Thermal Model

The thermal model used in the evaluation of the transfer cask for off-normal conditions is the same as that used for normal conditions described in Section 4.4.2.1. The off-normal conditions evaluated include off-normal cold transfer (-40°F ambient, case 16) and off-normal hot transfer (125°F ambient, case 17). Thermal parameters for the off-normal ambient conditions are summarized in Table 4.1-2 and Table 4.1-4. These off-normal conditions apply to the transfer cask in the horizontal orientation at the cask thermal ratings. There are no off-normal thermal conditions for the vertically oriented transfer cask since the cask is always inside the fuel building when handled vertically.

4.5.2.2 Maximum Temperatures

Off-normal transfer cask temperatures are presented in Table 4.5-5. Transfer cask temperature point locations are shown in Figure 4.4-20. Transfer cask maximum material temperatures for off-normal transfer conditions are presented in Table 4.5-6. Transfer cask maximum temperatures are less than allowable material temperatures in all cases.

4.5.2.3 Minimum Temperatures

The temperature in the transfer cask components under off-normal cold conditions are listed in Table 4.5-5. The temperatures shown are at the transfer cask thermal rating and therefore do not represent the lowest expected component temperatures.

The transfer cask components are also evaluated for the bounding low temperature load case of -40°F ambient temperature, zero decay heat load, and no insolation. The steady-state temperatures of the transfer cask for this analytically trivial case are -40°F. The component temperatures are within their minimum allowable material temperature in all cases.

Since the transfer cask uses water in the neutron shield, freeze protection must be considered during off-normal cold conditions (case 16b). Transient analysis is performed to illustrate the time frame available for safe operation when operating in freezing weather. The transfer cask is conservatively assumed to have no decay heat load and a uniform initial temperature of 77°F. The analysis assumes the outdoor ambient is -40°F and with a 33.5 mile per hour wind. For comparison, a second transient case assumes a 0°F outdoor temperature and the same wind conditions. The transient response of the cask's water filled neutron shield under each ambient condition is illustrated in Figure 4.5-10.

As can be seen from the data presented in the figure, the mean water temperature in the neutron shield is predicted to reach 32°F in approximately 13 hours under the -40°F ambient condition, while in excess of 24 hours is available under the 0°F ambient conditions. In reality, both of these results are conservative for a number of reasons. First, any ice formation on the inner surface of the neutron shield acts as an insulator since the thermal conductivity of ice is less than that of water. Second, the high wind velocity assumed results in high heat transfer rates at the shield surface. This can be seen via the relatively low differential temperature between the ambient and the shield surface. Any decrease in wind speed increases the differential

temperature between ambient and the shield and decreases the differential temperature between the water and the thermocouple. Note that the liquid neutron shield outer shell temperature drops rapidly to near ambient temperature within the first hour of the transient and continues to gradually approach ambient temperature as the neutron shield water cools.

A *technical specification* has been established, as presented in Section 12.3 of this FSAR, to monitor the of the transfer cask thermocouple temperature which is correlated to the liquid neutron shield temperature based on the bounding transient results for the -40°F ambient case.

4.5.2.4 Maximum Internal Pressures

From Table 4.5-6, the maximum average liquid neutron shield temperature is 252°F. Assuming water at saturation conditions, this temperature corresponds to maximum liquid neutron shield pressures of 16.2 psig. The allowable material temperature for the liquid neutron shield is based on the average saturation temperature of water at 45 psig (293°F). Based on this allowable temperature, the liquid neutron shield pressure remains below 45 psig under off-normal conditions. The liquid neutron shield is designed for a maximum internal pressure of 45 psig and is equipped with a pressure relief device set for the design pressure.

4.5.2.5 Maximum Thermal Stresses

The maximum transfer cask thermal stresses developed under off-normal conditions are addressed in Section 3.6.1 of this FSAR.

4.5.2.6 Evaluation of Transfer Cask Performance for Off-Normal Conditions

Figure 4.5-7 shows the radial temperature distribution at various axial positions for the transfer cask under off-normal hot conditions (case 17) at the maximum heat load rating (Q_{max}= 28.0 kW). Figure 4.5-8 presents the corresponding axial temperature distribution at Q_{max}= 28.0 kW.

Results of the steady-state analyses demonstrate that the transfer cask allowable material temperatures under off-normal ambient conditions are not exceeded for the cask thermal rating concurrent with ambient conditions which envelop those at all sites within the contiguous United States. Therefore, the transfer cask is suitable for transfer of all FuelSolutions™ canisters and their qualified SNF assemblies with decay heat loads which are bounded by the cask thermal ratings summarized in Table 4.1-5. The thermal qualification of each FuelSolutions™ canister is provided in Chapter 4 of the respective FuelSolutions™ Canister Storage FSAR.

Table 4.5-5 - Transfer Cask Off-Normal System Temperatures[1]

Transfer Cask Component	Temp. Point[2]	Off-Normal Transfer	
		Off-Normal Cold (-40°F, case 16) 28.0 kW	Off-Normal Hot (125°F, case 17) 28.0 kW
Ram Access Cover	1	108	258
	2	109	258
Top Cover	3	115	263
	4	116	259
Inner Shell	5	154	285
	6	253	359
	7	258	361
	8	188	306
	9	58	206
Lead Gamma Shield	10	158	287
	11	248	354
	12	253	356
	13	184	302
	14	58	206
Structural Shell	15	136	271
	16	151	276
	17	154	277
	18	110	243
	19	53	204
Liquid Neutron Shield Shell	20	116	251
	21	137	263
	22	50	203
Bottom Cover	23	26	185
	24	48	200

Table 4.5-5 Notes:

(1) All temperatures are in °F.

(2) Transfer cask temperature points are shown in Figure 4.4-20.

Table 4.5-6 - Transfer Cask Maximum Material Temperatures for Off-Normal Conditions[1]

Cask Component	Max. Thermal Profile		Allowable Material Temp.
	Case 16 28 kW	Case 17 28 kW	
Canister Shell	575	627	1000
O-rings	41	195	250[2]
Peak Lead	258	360	620
Average Lead	208	321	620
Peak Neutron Shield Fluid	147	272	293
Average Neutron Shield Fluid	120	252	293
RX-277/NS-3	100	252	350
Stainless Steel	263	365	1000
Thermocouple	151	274	-

Table 4.5-6 Notes:

(1) All temperatures in °F.

(2) The O-ring allowable material temperature does not apply for off-normal thermal conditions since the o-rings are not relied upon to provide a seal under these conditions.

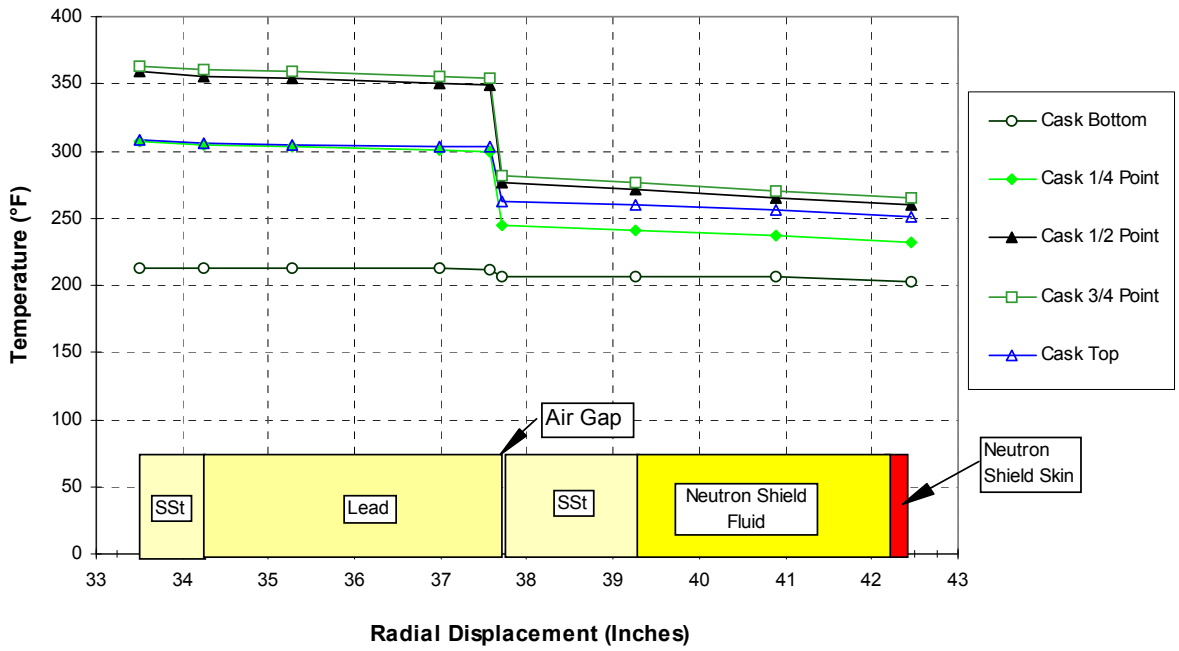

Figure 4.5-7 - Radial Temperature Distribution (Case 17, 28 kW)

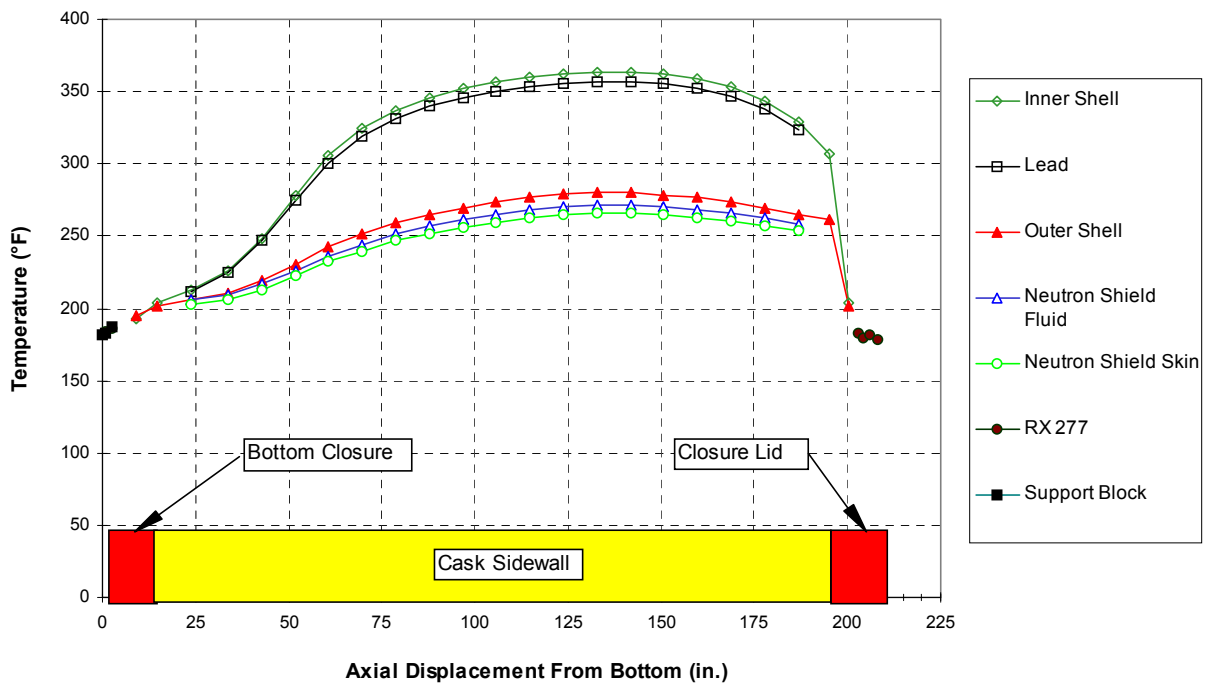

Figure 4.5-8 - Axial Temperature Distribution (Case 17, 28 kW)

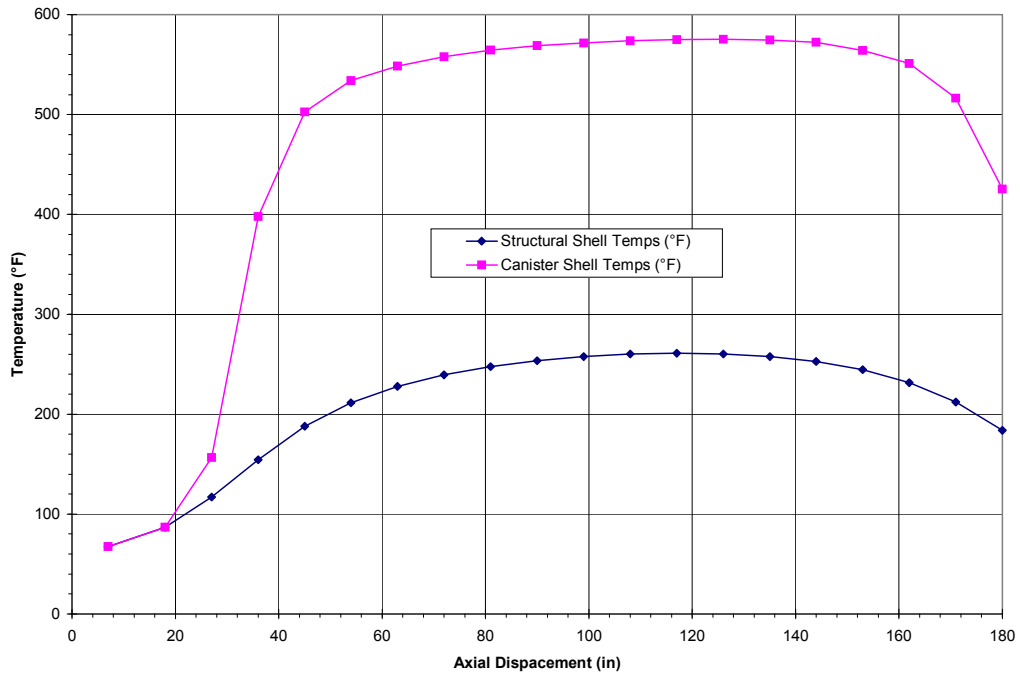

Figure 4.5-9 - Transfer Cask and Canister Shell Axial Temperature Distributions (Case 16, 28 kW)

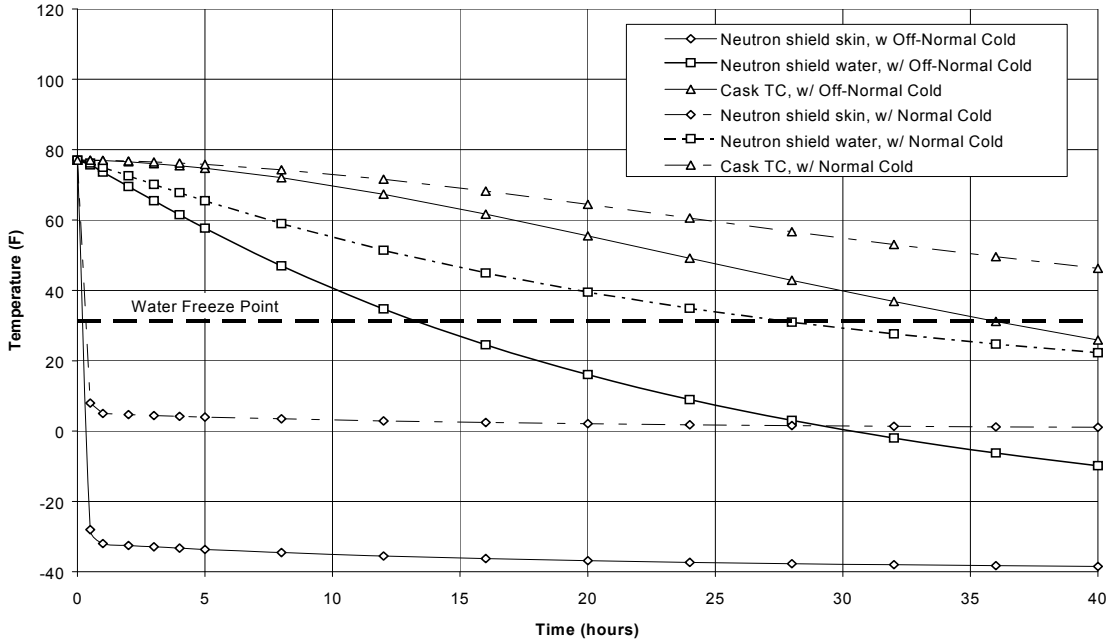

Figure 4.5-10 - Transient Thermal Response of Transfer Cask is Freezing Weather (Q_{max} = 0 kW)

This page intentionally left blank.

4.6 Thermal Evaluation for Accident Conditions of Storage

4.6.1 Storage Cask

The two storage cask postulated accident conditions considered are all vents blocked (case 11) and fire (case 15). The applicable storage cask operating conditions for these cases are summarized in Table 4.1-1 and Table 4.1-3.

The analyzed all vents blocked accident conditions bound any partial vent blockage, including complete blockage of all inlet vents due to flooding. Additionally, radial heat transfer is enhanced during flooding, and the thermal gradients encountered during flooding (40°F water) are bounded by the off-normal cold storage (case 8, -40°F ambient) analysis. Associated flood issues are discussed in Section 2.3.4.1.5.

4.6.1.1 Thermal Model

The thermal parameters corresponding to the postulated blocked vent and fire accident conditions require the use of different modeling bases than those previously presented for steady-state normal and off-normal analyses. This section presents a discussion of the different heat transfer modes and thermal model modifications applicable to each accident condition.

4.6.1.1.1 All Vents Blocked Accident

The thermal model used in the evaluation of the storage cask for the all vents blocked accident condition is similar to that used for the normal conditions (see Section 4.4.1.1). The following thermal modeling differences exist for the all vents blocked accident:

- Natural convection air flow upward through the inlet vents, dual annulus, and outlet vents is eliminated.
- Internal natural convection recirculation paths are introduced between the canister and thermal shield, and between the thermal shield and liner. These circulation paths are shown in Figure 4.6-1.
- Transient heat transfer analysis is performed instead of steady-state.

For the all vents blocked accident, the storage cask thermal rating is applied. All four inlet vents and all four outlet vents are conservatively assumed to be blocked. This scenario is considered extremely unlikely since the inlet and outlet vents are positioned at the quadrant locations and the outlet vents are located high above the ground. The storage cask outside diameter results in a large separation between the vents, minimizing the probability that any two vents, much less all eight, can be simultaneously blocked with a single failure mechanism.

The storage cask is assumed to be at steady-state for normal storage conditions (77°F ambient) prior to the start of the all vents blocked accident transient. A 100°F ambient temperature is assumed during the transient analysis. The internal natural convection recirculation flow path is presented in Figure 4.6-1. The air within the inner annulus is hotter than that in the outer annulus. Thus the air in the inner annulus tends to rise upward and the outer annulus air tends to flow downwards. The effect of convection in the gaps is an increase in heat transfer from the canister shell to the liner, compared to considering only conduction across the air gaps.

For the given convective air flow path, the heat transfer coefficients in the two gaps are evaluated using the correlation shown in Section 4.4.1.1.1. Similar to the air flow analysis presented for the normal flow conditions, the air flow rate in the gaps is limited by the sum of the pressure drops in the entire flow path. The momentum balance can be expressed as:

$$gL(\overline{\rho}_{out} - \overline{\rho}_{in}) = \Delta P_{in} + \Delta P_{out} + 0.5K_{bot}\rho_{bot}v_{bot}^2 + 0.5K_{top}\rho_{top}v_{top}^2$$

where the left-hand side of the equation is the buoyancy force resulting from the difference in average densities of the two gaps, and the right-hand side of the equation is the sum of the pressure drops in the flow path. K_{bot} and K_{top} are the loss coefficients at the 180° turns, based on the inner gap area, and v_{bot} and v_{top} are the velocities at the bottom and the top of the inner gap, respectively.

The heat transfer for the top section of the cask (the top submodel) is exactly the same as that for a normal operation case presented in Section 4.4.1.1.3. However, the heat transfer for the bottom section is different from that in the normal operation case (Section 4.4.1.1.4). Since air does not flow into the system, the natural convection heat transfer in the bottom section is neglected.

4.6.1.1.2 Storage Cask Fire

The transient response of the storage cask under postulated fire accident conditions is simulated using the lumped parameter heat transfer code SINDA with thermal modeling similar to that described for normal conditions. Two postulated fire events are simulated: 1) a 5-minute engulfing fire, and 2) a 5-minute fire within the storage cask inlet vents. The thermal models for the two postulated storage cask fire events are nearly identical to the normal model with minor modifications for the ambient conditions and natural convection.

Both fire transient analyses assume an initial steady state temperature distribution for normal hot storage conditions (Table 4.1-3, case 7). Immediately following the 5-minute fire event, ambient conditions are returned to normal hot storage conditions for evaluation of the post-event transient response.

Model Modifications for 5-Minute Engulfing Fire

The normal vertical storage cask model presented in Section 4.4.1.1, simulates the natural convection flow upward through the annulus induced by the buoyancy driven forces resulting from heavier (cooler) ambient air. During a fire event, the ambient (flame) temperature is much higher than that of the canister surface, the heat shield, and the cask liner. As a result, the gas in the storage cask annulus is heavier than the ambient gas creating reversed natural circulation flow. Hot combustion gas flows into the annulus gap from the top vents, flows downward along the annulus gap, and exits the cask through the bottom channels. While the gas flows downward along the annulus gaps, heat is transferred to the canister shell and the cask liner. Minor modifications to the normal air flow model are performed to account for the reverse convection. The air flow in the storage cask annulus reverses direction back to the normal vertical storage conditions immediately after the fire ceases.

In order to conservatively bound the canister shell temperature during the transient, no heat transfer is assumed between the shell and the canister internals. The normal vertical storage cask model used for transient analysis assumes that the entire thermal mass of the canister is concentrated at the canister shell. In order to allow conservative determination of the canister

shell temperature response during the fire event, the canister shell is modeled with only its thermal mass, not the total canister thermal mass.

Consistent with NUREG-1536, the flame and surface emissivities specified in 10CFR71.73(c)(4) are assumed to bound any credible storage cask fire because of the high heat and the proximity of the flames. The storage cask is conservatively assumed to become engulfed in a hydrocarbon fuel/air fire of sufficient extent, and in sufficiently quiescent ambient conditions, to provide an average emissivity coefficient of 0.9, with an average flame temperature of 1475°F for a period of 5 minutes. The flame source is conservatively assumed to extend 10 feet beyond any external surface of the specimen.

The mechanisms and models for coupling the fire energy to the cask surface include forced convection in relation to the flame velocity as well as thermal radiation. In order to conservatively maximize radiation and convection heat transfer, the flame is assumed to surround the cask with a flame temperature of 1475°F and a maximum velocity of 15 m/s (49.2 ft/sec), which gives the highest convection coefficient. A convection coefficient value of 3.8 Btu/hr-ft^2-°F is conservatively utilized for all exterior surfaces of the storage cask.

As discussed in previous sections, the heat transfer to the cask surface due to thermal radiation (assuming a view factor of unity) is given by:[22]

$$Q_{rad} = \frac{A_1 \sigma}{\left(\frac{1}{\varepsilon_1} + (\frac{1}{\varepsilon_2} - 1)\frac{A_1}{A_2}\right)}(T_2^{\,4} - T_1^{\,4})$$

Thermal radiation heat transfer is maximized by extending the area of the flame surface, A_2, up to 10 feet beyond any external surface of the cask. For the cask surface, the emissivity is assumed to be 0.9 and the emissivity of the flame is assumed to be 0.9 per 10CFR71.73(c)(4). Consistent with 10CFR71.73(c)(4), a surface absorptivity coefficient of 0.883 is used.

For turbulent forced convection, the coefficient for a vertical wall is used. For Reynolds numbers greater than 5 x 10^5 this is given as:[22]

$$h_c = Nu_f \frac{k_f}{L} = 0.036 \frac{k_f}{L} Re_l^{\,0.8} \, Pr_f^{\,1/3}$$

where:

h_c = Forced convection coefficient

Nu_f = Nusselt number

k_f = Thermal conductivity of gas at mean film temperature

L = Height of cask

Re_l = Reynolds number of gas at mean film temperature

Pr_f = Prandtl number of gas at mean film temperature

Consistent with NUREG-1536, a maximum velocity of 15 m/s (49.2 ft/sec) is assumed. The same convection coefficient is conservatively used for the storage cask top and the side walls even though the flame velocity for the top section of the cask is lower.

Model Modifications for 5-Minute Inlet Vent Fire

There is no significant modeling change required to simulate the postulated 5-minute inlet vent fire. The basic flow pattern is the same as that for the normal vertical operation. However, it is assumed that the liquid fuel burns within the cask inlet vents and the base section bottom penetration, thus the temperatures for the air nodes of the base sub-model are set to the fire temperature 1475°F (801.7°C). The hot combustion gases rise along the vertical annulus gaps, giving up heat to the canister shell, the heat shield, and the cask liner along the way. The exhaust gas exits the cask from the outlet vents.

Similar to the 5-minute engulfing fire, the canister shell is modeled with only its thermal mass, not the total canister thermal mass in order to conservatively bound the canister shell temperature during the transient.

4.6.1.2 Maximum Temperatures

Storage cask system temperatures are presented in this section for the all vents blocked accident conditions and the fire accident conditions.

Transient analyses have been performed for both the all vents blocked accident and fire accident conditions. For the all vents blocked accident condition, the *technical specification* contained in Section 12.3 of the canister FSAR provides for periodic visual inspection of the vent screens or periodic monitoring of the storage cask liner thermocouple temperature and corrective actions to help assure that the maximum short-term allowable concrete temperature (350°F) is not exceeded. For the fire accident, there is no corresponding *technical specification* which correlates surface concrete temperature to the liner thermocouple reading. This is due to the fact that the cask outer surface concrete temperatures exceed 350°F nearly instantaneously during the fire accident, and the storage cask thermocouples cannot be expected to be functional following the fire accident. The duration of the fire is limited to less than 5 minutes by limiting the quantity of combustible fuel as provided Section 8.1.10 of this FSAR.

4.6.1.2.1 All Vents Blocked Accident

Storage cask system temperatures for the all vents blocked accident condition are presented in Table 4.6-1 for the storage cask temperature point locations shown in Figure 4.4-8. Maximum material temperatures are presented in Table 4.6-2. Temperatures in both tables correspond to the rated Q_{max} (28.0 kW) heat load at 41 hours after blockage of the vent screens (i.e., the time at which the 350°F short-term allowable concrete temperature is reached). These results bound the all vents blocked temperatures for the $LHGR_{max}$ case, which show that the 350°F short-term allowable concrete temperature is reached after 55 hours for the rated LHGR of 0.253 kW/inch.

Similar to the horizontal storage cask case, Figure 4.6-4 presents the surface concrete temperature as a function of time over the all vents blocked accident transient. The corresponding storage cask thermocouple temperatures are also provided over the transient time period. From Figure 4.6-4, the maximum liner thermocouple temperature for a storage cask with

the rated Q_{max} heat load of 28.0 kW is 334°F for the all vents blocked accident condition at 41 hours after vent blockage.

The maximum temperatures in the storage cask for total heat loads that are less than the maximum rated Q_{max} heat load are presented in Table 4.6-3. These temperatures correspond to the times at which the short-term allowable concrete temperature is reached for each heat load, as shown in Figure 4.6-5. The periodic monitoring surveillance interval for a specific cask heat load, as required by the canister FSAR *technical specifications*, provides sufficient time to detect vent blockage and initiate corrective actions to maintain safe storage conditions.

4.6.1.2.2 Fire Accident

Storage cask system temperatures at the end of the postulated 5-minute engulfing and inlet vent fire accidents are presented in Table 4.6-1. Peak material temperatures for each component are presented in Table 4.6-2 for the fire accident and postaccident periods.

5-Minute Engulfing Fire

Figure 4.6-6 shows the maximum temperatures of the canister and the concrete, along with the thermocouple temperature readings as a function of time during the engulfing fire transient. The maximum cask concrete temperature rises sharply from 197°F (liner interface) at the beginning of the fire to 744°F (between inlet vents) at the end of the fire. A local peak temperature of 916°F is observed at the corner of the air inlets due to the high surface to volume ratio of the corner geometry. Due to the large thermal mass of the canister and the fact that the canister continues to release heat after the fire ceases, the canister surface temperature reduces slowly after the fire.

At the end of the fire duration, the exterior cask surface is at a temperature much higher than that of the cask interior. As a result, the temperature of the cask interior continues to increase due to heat transfer from the cask exterior surface. In addition, the cask exterior is cooled rapidly by convection and radiation to the surroundings, leading to a reduction of the bulk temperature of the cask.

Figure 4.6-7 presents the radial temperature profile at various times during and after the fire. During the fire, the bulk of the cask remains cold, while the exterior surface temperature rises sharply. After the fire event ends, the cask exterior surface cools quickly. The fire does not significantly affect the bulk concrete temperature, and the temperature of the inner concrete does not change during and after the fire. Less than 2 inches of the concrete exceeds the short-term temperature limit of 350°F.

5-Minute Inlet Vent Fire

Figure 4.6-8 shows the maximum temperatures of the canister shell at three locations, and the cask along with the readings of the thermocouples as a function of time for the fire within the inlet vents. As shown, the temperature of the concrete at the liner interface changes very little due to the fire. The peak concrete temperature in the bottom inlet duct (269°F) is not presented in the figure. However, the canister shell temperatures rise more significantly than the concrete temperature. The temperatures at the canister bottom rise from 101°F to 169°F between initiation and cessation of the hypothetical vent fire, yielding a maximum temperature difference of 68°F. The temperature rise at the top portion of the canister shell is less significant because the narrow

cask annular regions limit the flame heat transfer mechanism to mainly convection with secondary radiative heat imparted to the canister shell from the heat shield.

Figure 4.6-9 shows the radial temperature profiles across the cask side wall at various times during the inlet vent fire. Over the 5 minute transient, the radial temperature profiles overlap each other except at the liner/cask interface, indicating that this fire does not significantly affect the concrete temperature. Due to the large thermal mass of the canister and the fact that canister is still releasing the decay heat, the canister surface temperature reduces very slowly during the post-fire duration. Thus, even though cold air comes in from the inlet vents after the fire ceases, the canister surface temperature basically remains constant within the first 30 minutes after the fire.

Exposure of the storage cask to the postulated fire accident under vertical conditions bounds the cask and loaded canister under horizontal conditions. The thermal response of the storage cask exterior concrete surface in the horizontal orientation is nearly identical to the vertical case; however, natural convection of hot combustion gasses does not develop in the horizontal orientation. As a result, the canister shell, storage cask liner and heat shield are cooler in the horizontal case.

The thermal response of the canister and SNF to the postulated fire accident is addressed in the respective FuelSolutions™ Canister Storage FSAR.

4.6.1.3 Minimum Temperatures

There are no storage cask thermal accident conditions relative to minimum allowable material temperatures.

4.6.1.4 Maximum Thermal Stresses

Applicable storage cask thermal stresses resulting from accident conditions are addressed in Section 3.7.1 of this FSAR.

4.6.1.5 Evaluation of Storage Cask Performance for Accident Conditions

4.6.1.5.1 All Vents Blocked Accident

The radial and axial temperature distributions in a storage cask with a maximum heat load of 28 kW at 41 hours into the all vents blocked accident transient are shown in Figure 4.6-2 and Figure 4.6-3, respectively. For the all vents blocked accident case, the transient analysis demonstrates that the storage cask short-term allowable material temperature is not exceeded for the cask thermal rating concurrent with ambient conditions provided that the *technical specification* (Section 12.3 of this FSAR) requirements for periodic monitoring are met.

Therefore, the storage cask is suitable for the dry storage of all FuelSolutions™ canisters and their qualified SNF assemblies with thermal ratings which are bounded by the storage cask thermal ratings summarized in Table 4.1-5. Over the long-term storage period the SNF decay heat decreases, thus increasing the margins relative to the allowable material temperatures. The thermal qualification of each FuelSolutions™ canister is provided in Chapter 4 of the respective FuelSolutions™ Canister Storage FSAR.

4.6.1.5.2 Fire Accident

The short-term allowable concrete surface temperature of 350°F is used as a guideline for assessing the depth of localized storage cask concrete damage due to the postulated 5-minute engulfing and inlet vent fire events. As shown in Figure 4.6-7, at the end of the fire transient less than 2" of concrete exceeds the short-term allowable concrete temperature of 350°F. The fire accident evaluation conservatively considers the effects of the storage cask maximum heat load rating, insolation, and ambient temperature conditions prior to the fire as initial conditions for the event. Based on the thickness of the storage cask wall, concrete damage which may result from concrete temperature greater than 350°F does not create a condition which poses a safety concern or where the cask cannot be recovered or repaired.

70 gallons of combustible fuel are required to create the engulfing fire conditions simulated by the analysis. Although only 15 gallons of fuel are required to create the inlet vent fire conditions, these 15 gallons are conservatively assumed to accumulate to a depth of 1 inch beneath the cask within the air inlets. It is not credible that more than 15 gallons of fuel could accumulate in the air inlets without flowing from under the cask. The duration of the fire is limited to less than 5 minutes by limiting the quantity of combustible fuel as provided in Section 8.1.10 of this FSAR.

Table 4.6-1 - Storage Cask System Temperatures for Accident Conditions[1]

Storage Cask Component	Point[2]	All Vents Blocked (41 hours, Q_{max})	5- Minute Fire[3]	
			Engulfing	Inlet Vent
Top Cover	1	175	553	160
	2	305	489	395
Shield Ring	3	193	173	173
Cask Side Wall	4	160	736	154
	5	346	203	200
	6	173	160	160
	7	141	732	141
	8	326	177	179
	9	160	149	149
	10	133	728	135
	11	250	137	142
	12	130	127	127
	13	115	717	122
Bottom Section	14	90	139	269
	15	108	744	126
	16	89	109	109
	17	98	115	114
Tierods	6	173	160	160
Support Tubes	18	86	183	348

Table 4.6-1 Notes:

(1) All temperatures are in °F.

(2) Storage cask temperature points are shown in Figure 4.4-8.

(3) Fire accident temperatures reported at the end of the 5 minute fire transient.

Table 4.6-2 - Storage Cask Maximum Temperatures for Accident Conditions

Component/ Location	Maximum Temperature (°F)			Allowable Material Temp. (°F)
	All Vents Blocked (41 hours, Q_{max})(1)	5-Minute Fire		
		Engulfing	Inlet Vent	
Canister Shell	644	475	478	1000
Inner Air Gap	548	1337	1391	n/a
Thermal Shield	540	530	558	600
Outer Air Gap	486	1382	1370	n/a
Liner	350	205	202	1000
Surface Concrete	349	744 / 916(3)	200 / 269(4)	350
Average Concrete	173	173	147	n/a
Liner Thermocouple	334	184(2)	185(2)	n/a
Concrete Thermocouple	163	151(2)	151(2)	n/a

Table 4.6-2 Notes:

(1) Maximum temperatures for all vents blocked accident conditions and Q_{max} are shown graphically in Figure 4.6-2.

(2) Thermocouple is not expected to remain operational during the fire accident.

(3) Engulfing fire maximum surface concrete temperature of 744°F corresponds to the cask side wall between the inlet vents. 916°F corresponds to the local temperature on the corner of the inlet vents.

(4) Inlet vent fire maximum surface concrete temperature of 200°F corresponds to the cask side wall at the liner interface. 269°F corresponds to the concrete in the inlet duct.

Table 4.6-3 - Maximum Storage Cask Temperatures for Reduced Cask Heat Load All Vents Blocked Accident Condition

Component/ Location	Maximum Temperatures, Initial/Peak (°F)					Allowable Temperature (°F)
	Q=25 kW[1]	Q=20 kW[2]	Q=15 kW[3]	Q=10 kW[4]	Q=5 kW[5]	
Canister Shell	399 / 622	355 / 587	307 / 547	252 / 481	185 / 335	1,000
Inner Air Gap	190 / 546	174 / 512	157 / 484	138 / 425	116 / 304	N/A
Thermal Shield	246 / 523	219 / 498	191 / 471	162 / 419	129 / 291	6000
Outer Air Gap	171 / 467	158 / 454	144 / 434	129 / 393	111 / 276	N/A
Liner	161 / 347	149 / 348	137 / 351	126 / 327	114 / 230	1,000
Liner Thermocouple	144 / 332	133 / 335	123 / 342	113 / 324	103 / 227	N/A
Surface Concrete	161 / 345	149 / 347	137 / 350	126 / 326	114 / 230	350
Concrete Thermocouple	123 / 168	118 / 184	112 / 209	110 / 220	101 / 175	N/A

Table 4.6-3 Notes:

(1) Peak temperatures occur at 50-hours into transient. The concrete short-term allowable temperature of 350°F is reached at approximately 52 hours into the all vents blocked transient.

(2) Peak temperatures occur at 80 hours into transient.

(3) Peak temperatures occur at 146 hours into transient.

(4) Peak temperatures occur at 360 hours into transient. Results show that allowable temperatures are not exceeded under steady-state all vents blocked conditions.

(5) Peak temperatures occur at 480 hours into transient. Results show that allowable temperatures are not exceeded under steady-state all vents blocked conditions.

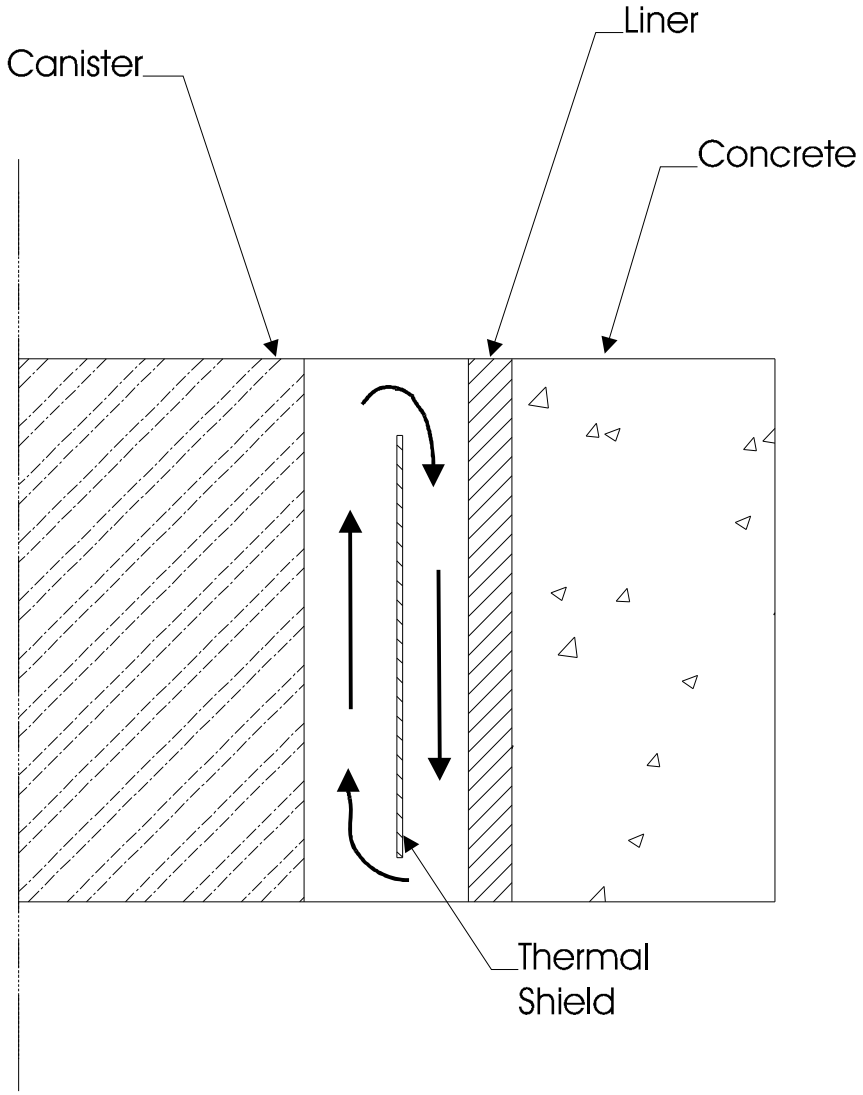

Figure 4.6-1 - Storage Cask Thermal Model, All Vents Blocked Accident

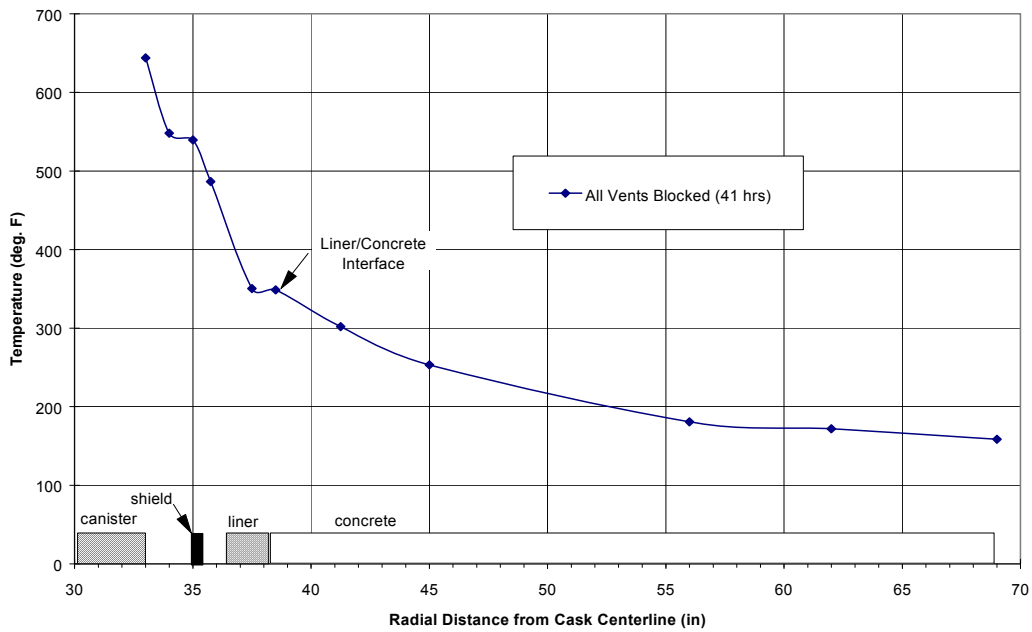

Figure 4.6-2 - Storage Cask All Vents Blocked Accident Transient Radial Temperatures (Q_{max} = 28.0 kW, 41 hours)

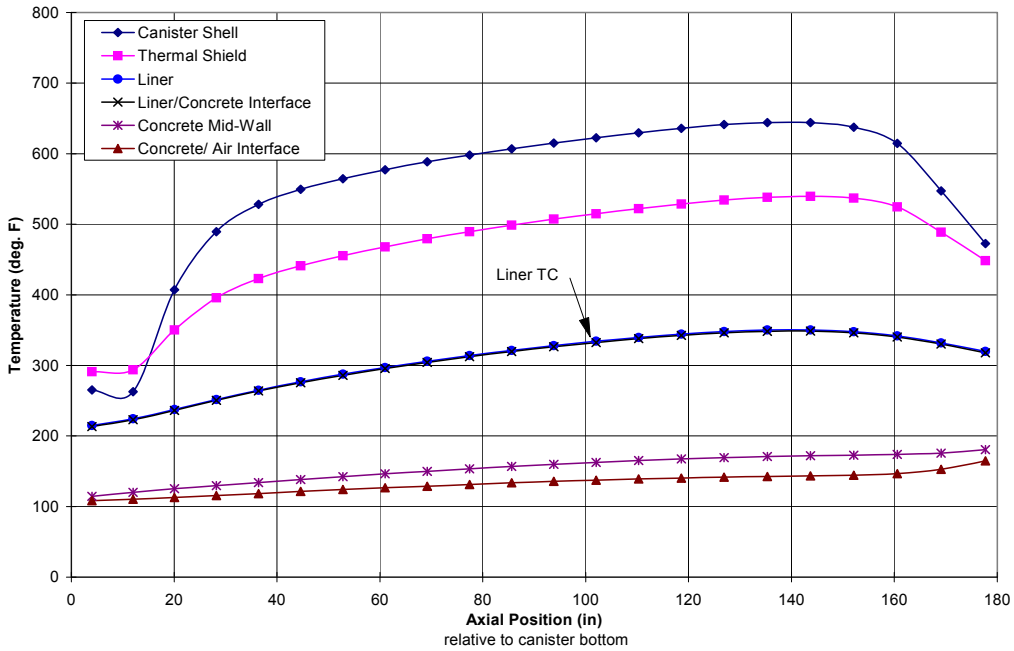

Figure 4.6-3 - Storage Cask All Vents Blocked Accident Axial Temperatures (Q_{max} = 28 kW, 41 hrs)

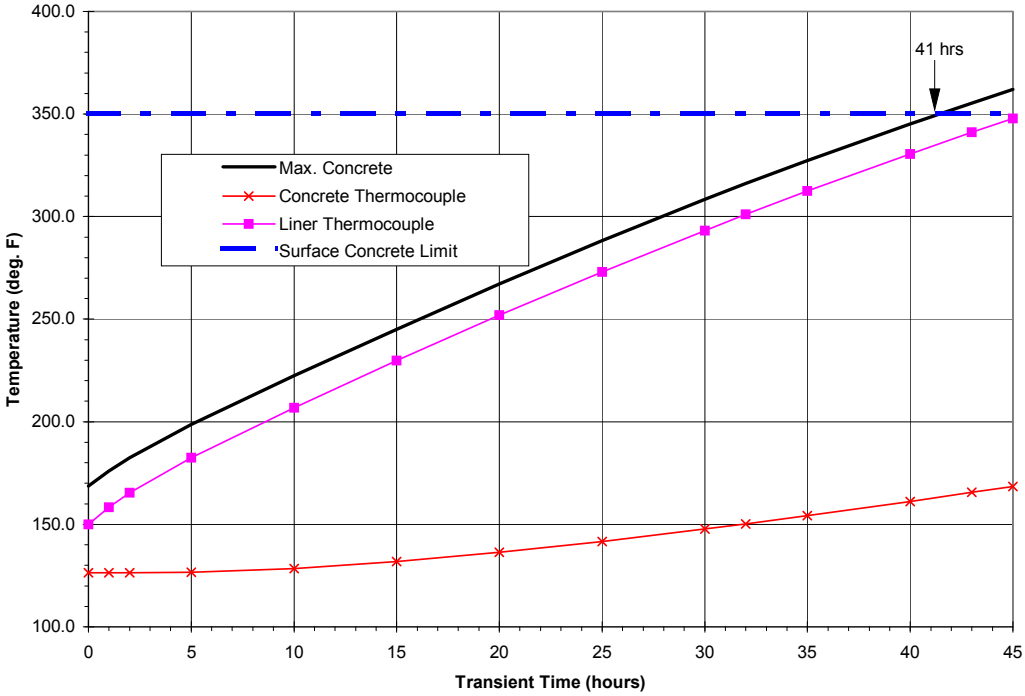

Figure 4.6-4 - Storage Cask Concrete Temperature During All Vents Blocked Accident Transient (Q_{max} = 28.0 kW)

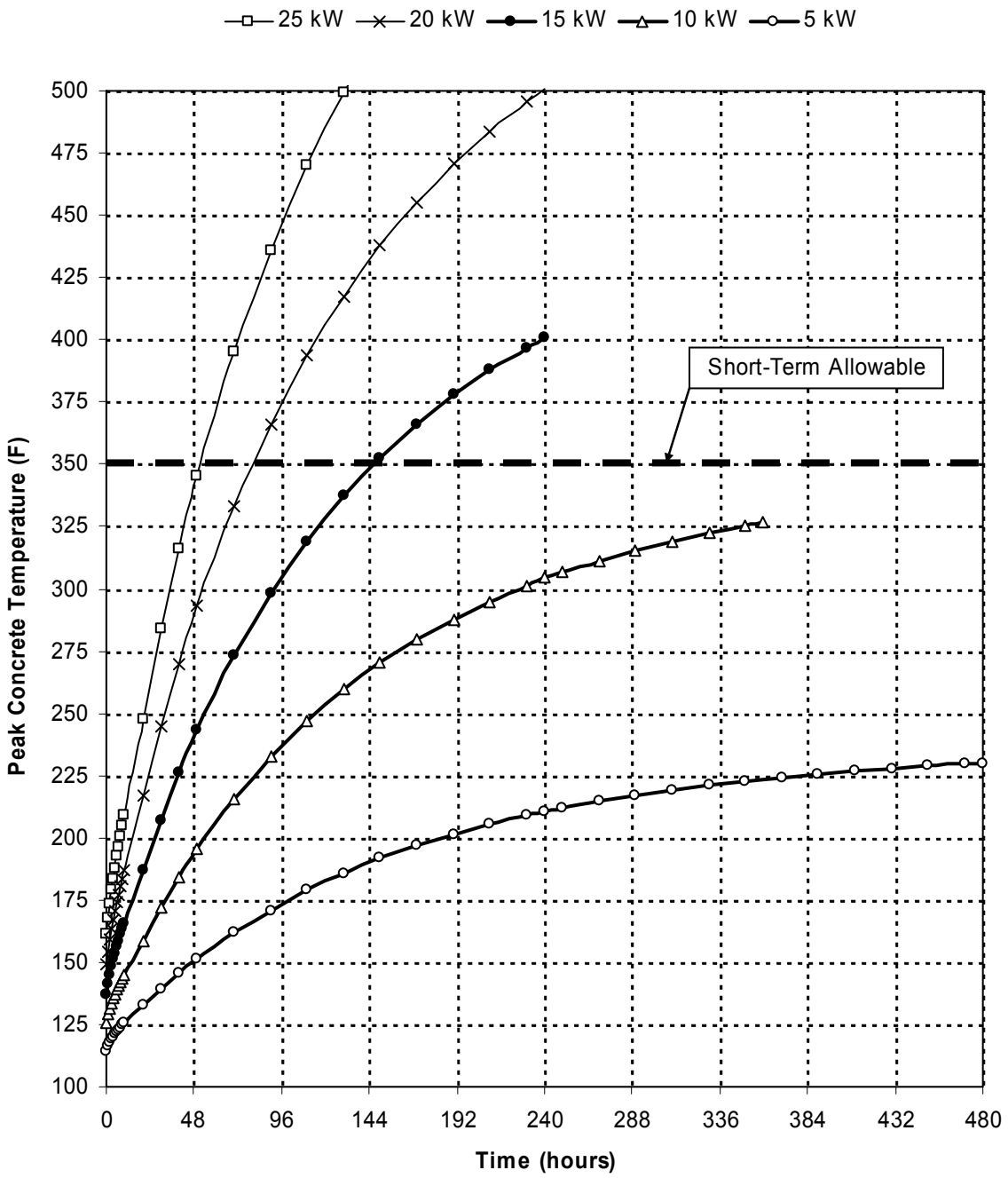

Figure 4.6-5 - Peak Concrete Temperature for Reduced Cask Heat Load All Vents Blocked Accident Conditions

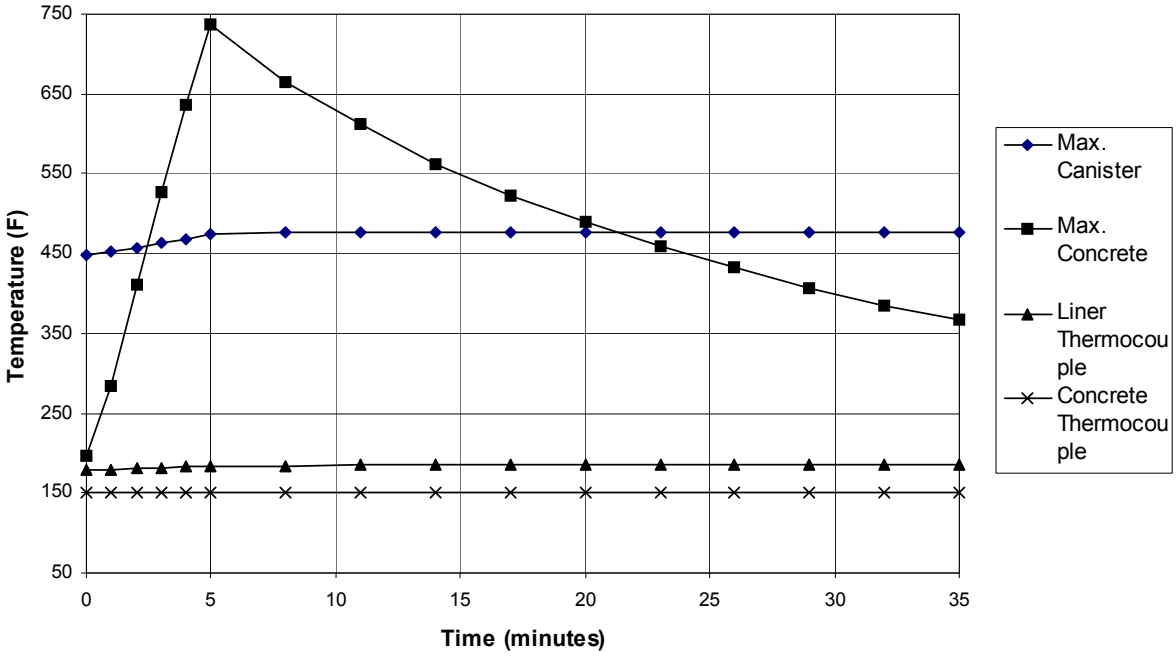

Figure 4.6-6 - Storage Cask Transient Response During Total Engulfing Fire Event

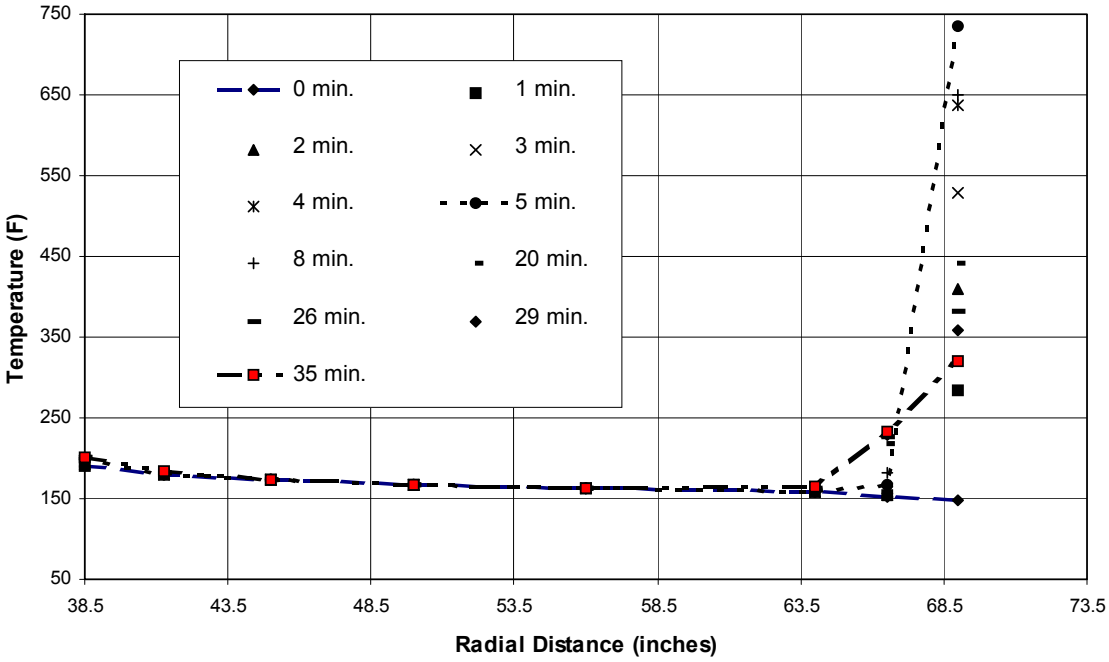

Figure 4.6-7 - Storage Cask Radial Temperature Distribution During Total Engulfing Fire Event

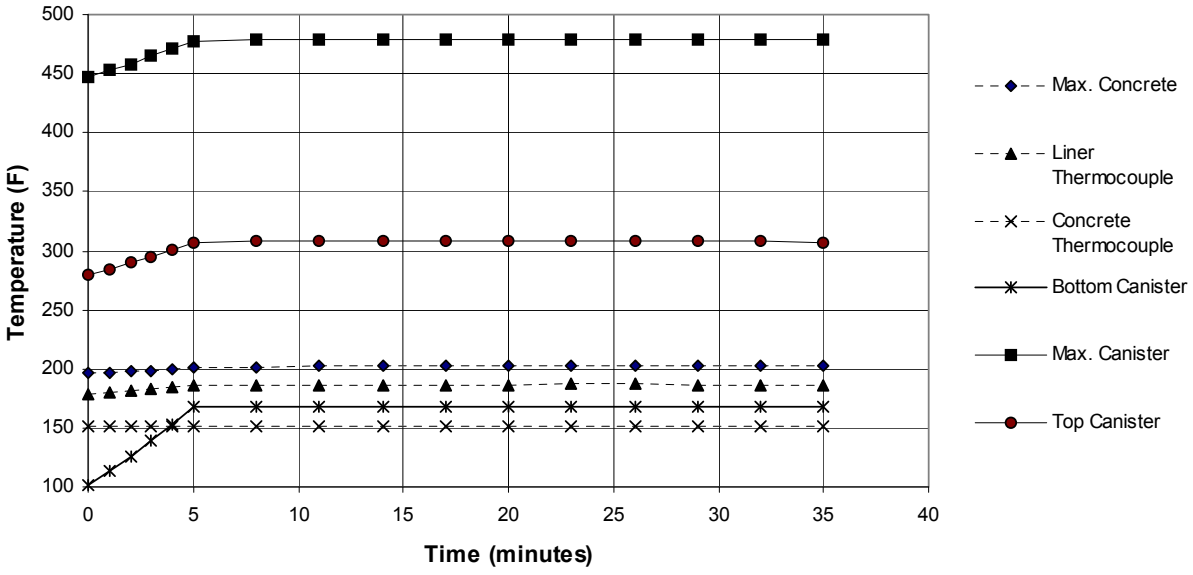

Figure 4.6-8 - Storage Cask Transient Response During Inlet Vent Fire Event

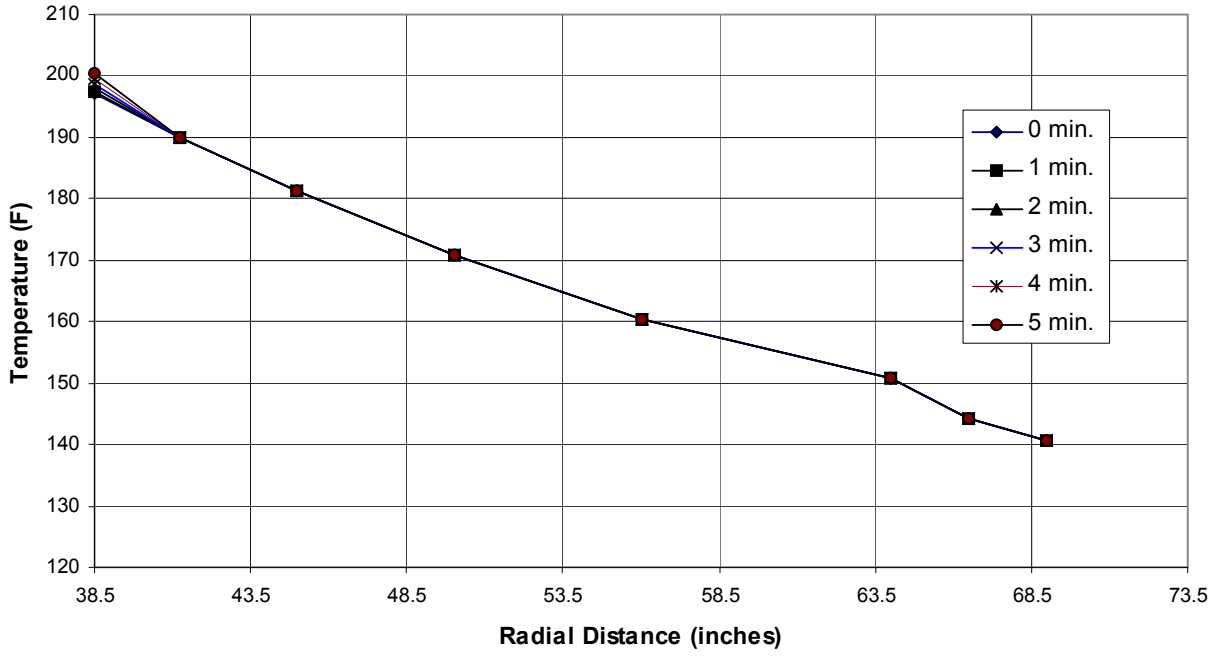

Figure 4.6-9 - Storage Cask Radial Temperature Distribution During Inlet Vent Fire Event

4.6.2 Transfer Cask

The transfer cask is evaluated for a postulated loss of liquid neutron shield accident (case 18) and a postulated fire accident (case 20). The thermal parameters for these accident conditions are summarized in Table 4.1-2 and Table 4.1-4 for the applicable case. These accident conditions apply to outside horizontal transfer cask orientation when subjected to the maximum thermal ratings.

4.6.2.1 Thermal Model

The thermal models used in the evaluation of the loss of neutron shield accident and the fire accident are similar to the model for the normal transfer conditions (see Section 4.4.2.1). Minor modifications to the cask configurations and ambient conditions within the transfer cask model are necessary to simulate the applicable accident scenarios. These modifications are discussed below.

4.6.2.1.1 Loss of Neutron Shield Accident

The thermal model utilized for normal horizontal transfer conditions is utilized. A steady-state analysis is performed at the cask thermal ratings (Q_{max} and $LHGR_{max}$). The only difference from the normal transfer conditions model is that the liquid neutron shield is assumed to be filled with air at 1 atm instead of water. As discussed in Section 4.4.2.2, determination of the transfer cask thermal rating considers the postulated loss of neutron shield accident.

As discussed in Section 4.4.2.1.3, heat transfer within the empty liquid neutron shield is provided by radiation and convection. The free convection correlations presented in Section 4.4.2.1.3 are utilized, with the fluid properties of air substituted for water. The heat transfer correlations presented previously in Section 4.4.2.1.6 apply for radiation heat transfer from the outer surface of the transfer cask structural shell to the inner surface of the liquid neutron shield outer jacket. As discussed previously, both surfaces are assumed to have an emissivity of 0.4 corresponding to a commercial sand blasted finish.

4.6.2.1.2 Fire Accident

The thermal model utilized for normal horizontal transfer conditions is also utilized for the fire accident transient analysis. Thermal parameters for the fire accident are summarized in Table 4.1-4. Prior to the event, the transfer cask is assumed to be at steady-state conditions for normal hot transfer (100°F, case 15) at Q_{max} (28.0 kW). Following the fire event, the ambient temperature is assumed to be at 100°F with 24-hour average insolation.

The coating on the transfer cask neutron shield outer shell is rated for 325°F, and is not expected to survive the postulated fire event. However, the coating emissivity (0.85) is conservatively assumed during the fire event. The transfer cask neutron shield shell post-event outer surface emissivity is assumed to be 0.8 since the external surface of the cask will be darkened by soot during the fire event.

Similar to the storage cask fire accident (Section 4.6.1.1.2) the flame and surface emissivities specified in 10CFR71.73(c)(4) are assumed to bound any credible transfer cask fire because of the high heat and proximity of the flame. The transfer cask is assumed to be engulfed in a

hydrocarbon fuel/air fire with an average emissivity of 0.9 and an average flame temperature of 1475°F. Convective heat transfer from the flame to the cask occurs via a forced convection flame velocity of 49.2 ft/s (15 m/s). Although 10CFR71.73(c)(4) specifies a 30-minute fire for transportation, this analysis assumes a 5-minute fire duration. The quantity of combustible fuel at the ISFSI is limited in the operating procedure presented in Section 8.1.10 of this FSAR such that the 5-minute fire duration can not be exceeded.

During the postulated fire event, the liquid neutron shield water heats up until the pressure relief device activates at 45 psig. At this point, the neutron shield liquid is released from the transfer cask in the form of steam. To conservatively bound this condition during the fire transient analysis, the liquid neutron shield is assumed be filled with air at 1 atmosphere.

During the fire, the thermal properties of the solid neutron shielding material (RX-277) in the transfer cask covers are conservatively assumed to be maintained in order to maximize the heat taken in by the cask. For the postaccident analysis, the solid neutron shielding material is conservatively assumed to have the thermal properties of air with only conduction heat transfer occurring.

4.6.2.2 Maximum Temperatures

4.6.2.2.1 Loss of Neutron Shield Accident

Transfer cask system temperatures for the loss of neutron shield accident at Q_{max} are presented in Table 4.6-4 for the transfer cask temperature point locations shown Figure 4.4-20. Table 4.6-5 presents the maximum material temperatures for the transfer cask components at the maximum transfer cask thermal ratings (Q_{max} and $LHGR_{max}$). In all cases, the transfer cask temperatures are less than the applicable allowable material temperature.

4.6.2.2.2 Fire Accident

Similar to the loss of neutron shield accident, the transfer cask system temperatures for the fire accident are presented in Table 4.6-4 for the transfer cask temperature point locations shown in Figure 4.4-20. These temperatures are presented at the end of the 5-minute fire transient. The maximum material temperatures for the transfer cask components throughout the fire and post-event period are presented in Table 4.6-6. The solid neutron shield material within the covers exceeds allowable material temperatures. The liquid neutron shield outer shell exceeds the 1000°F short-term allowable temperatures, but remains well below the material melting temperature of 2600°F. All other transfer cask stainless steel material remains below the 1000°F short-term stainless steel allowable temperature during the fire transient. The 325°F allowable temperature for the neutron shield jacket coating does not apply during the fire accident, since the coating is not assumed to be present following the event. Similarly, the O-ring allowable temperature of 250°F does not apply to the fire event since the O-rings are not required to maintain a seal.

Figure 4.6-12 presents the transfer cask material temperatures throughout the 5-minute fire transient and the post-event time period. As can be seen, temperatures for the neutron shield shell, flanges, and RX-277 drop immediately at the end of the fire transient. The remaining transfer cask materials continue to rise slowly to steady-state temperatures during the postaccident period.

4.6.2.3 Minimum Temperatures

Lower temperatures or reduced heat loading tend to increase the margins between transfer cask temperatures and their respective allowable material temperatures. As a result, minimum temperature effects are not evaluated for the loss of neutron shield accident.

4.6.2.4 Maximum Internal Pressures

Since the postulated loss of neutron shield accident is caused by a breach of the liquid neutron shield pressure boundary, the neutron shield internal pressure is atmospheric.

The fire accident results in maximum liquid neutron shield pressures at the design pressure; however, the liquid neutron shield is protected by a pressure relief device which is set at 45 psig. For thermal analysis purposes, the liquid neutron shield is conservatively assumed to be filled with air at atmospheric pressure.

4.6.2.5 Maximum Thermal Stresses

Thermal stresses in the transfer cask resulting from the loss of neutron shield accident are addressed in the thermal stress analysis presented in Section 3.7.2 of this FSAR.

4.6.2.6 Evaluation of Transfer Cask Performance for Accident Conditions

Results of the steady-state analyses demonstrate that the transfer cask allowable material temperatures for a postulated loss of neutron shield accident are not exceeded for the cask thermal rating. Figure 4.6-10 presents the transfer cask radial temperature distribution at various axial positions under the loss of neutron shield conditions at Q_{max} = 28.0 kW. Figure 4.6-11 presents the corresponding axial temperature distribution.

Results of the fire accident evaluation demonstrate that the major transfer cask structural and gamma shielding materials remain below maximum material limits. The solid neutron shielding material within the transfer cask covers exceed the material allowable temperature, resulting in a potential loss of shielding effectiveness. With the exception of the liquid neutron shield jacket, peak temperatures during the fire transient do not approach material allowables. This is due to the large thermal mass of the loaded transfer cask, and the short duration of the postulated fire event. Over 200 gallons of combustible fuel are required to create the engulfing fire conditions simulated by the analysis. The duration of the fire is limited to less than 5 minutes by the operating procedure presented in Section 8.1.10 of this FSAR which limits the quantity of combustible fuel.

Therefore, the transfer cask is suitable for the dry transfer of all FuelSolutions™ canisters and their qualified SNF assemblies with decay heat loads which are bounded by the transfer cask thermal ratings summarized in Table 4.1-5. The thermal qualification of each FuelSolutions™ canister is provided in Chapter 4 of the respective FuelSolutions™ Canister Storage FSARs.

Table 4.6-4 - Transfer Cask Temperatures for Accident Conditions[1]

Transfer Cask Component	Temp. Point[2]	Loss of Neutron Shield (Case 18) 28 kW	Fire Accident (Case 20)[3] 28 kW
Ram Access Cover	1	287	221
	2	290	223
Top Cover	3	299	230
	4	314	275
Inner Shell	5	371	266
	6	546	342
	7	569	344
	8	448	287
	9	251	186
Lead Gamma Shield	10	378	274
	11	541	337
	12	563	339
	13	444	283
	14	251	206
Structural Shell	15	353	404
	16	495	274
	17	516	276
	18	406	238
	19	245	316
Liquid Neutron Shield Shell	20	195	1131
	21	249	1135
	22	151	1113
Bottom Cover	23	203	154
	24	236	304

Table 4.6-4 Notes:

(1) All temperatures are in °F.

(2) Transfer cask temperature points are shown in Figure 4.4-20.

(3) Transfer cask fire temperatures reported at the end of the fire transient (5minutes).

Table 4.6-5 - Transfer Cask Maximum Material Temperatures for Loss of Neutron Shield Accident[1,2]

Cask Component	Loss of Neutron Shield (Case 18)		Allowable Material Temp.
	Q_{max} = 28 kW	$LHGR_{max}$= 0.253 kW/in	
Canister Shell	750	793	1000[4]
O-rings	225	165	250[3]
Peak Lead	568	577	620
Average Lead	482	402	620
RX-277/NS-3	286	256	350
Stainless Steel	573	583	1000[4]
Thermocouple	514	471	-

Table 4.6-5 Notes:

(1) All temperatures in °F.

(2) Neutron shield cavity occupied by air for both case 18 and case 20.

(3) The O-rings are not required to be functional during operations with the annulus dry.

(4) The 1000°F short-term stainless steel allowable temperature applies to accident conditions since these conditions are not combined with a structural load condition.

Table 4.6-6 - Transfer Cask Maximum Material Temperatures for Fire Accident[1]

Component	Pre-Fire Steady State	Fire Transient ($0 \leq t \leq 5$ min.)	Post-Fire[1] Cool-Down / Steady State	Short Term Allowable[2]
Canister Shell	618	618	753	1000
Cask Inner Shell	347	347	574	1000
Cask Lead Shield	344	344	571	620
Cask Outer Shell	260	279	522	1000
Liquid Neutron Shield Skin	246	1136	260	1000
Top Flange Joint	233	568	270	1000
Bottom Flange Joint (Seal Location)	171	516	204	1000
RX-277	165	843	167	350

Figure 4.6-6 Notes:

(1) All temperatures in °F.

(2) The 1000°F short-term stainless steel allowable temperature applies to accident conditions since these conditions are not combined with a structural load condition.

(3) Peak stainless steel temperature at the liquid neutron shield outer shell exceeds the allowable temperature, however is lower than the stainless steel melting point temperature (2600°F).

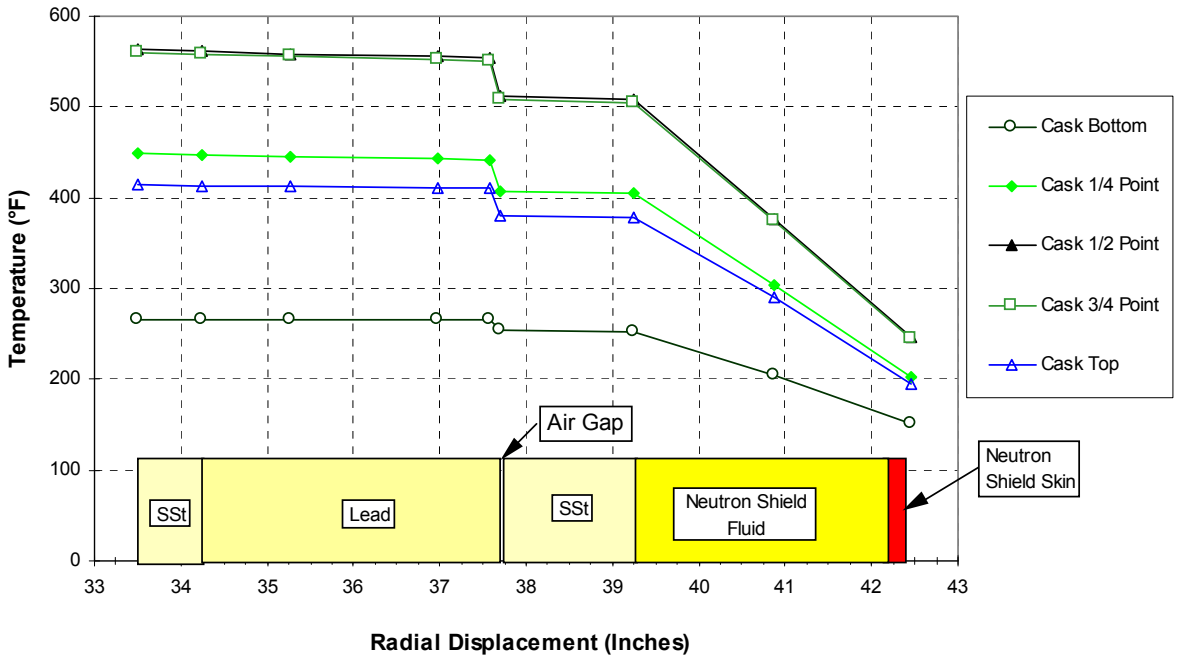

Figure 4.6-10 - Radial Temperature Distribution (Case 18, 28 kW)

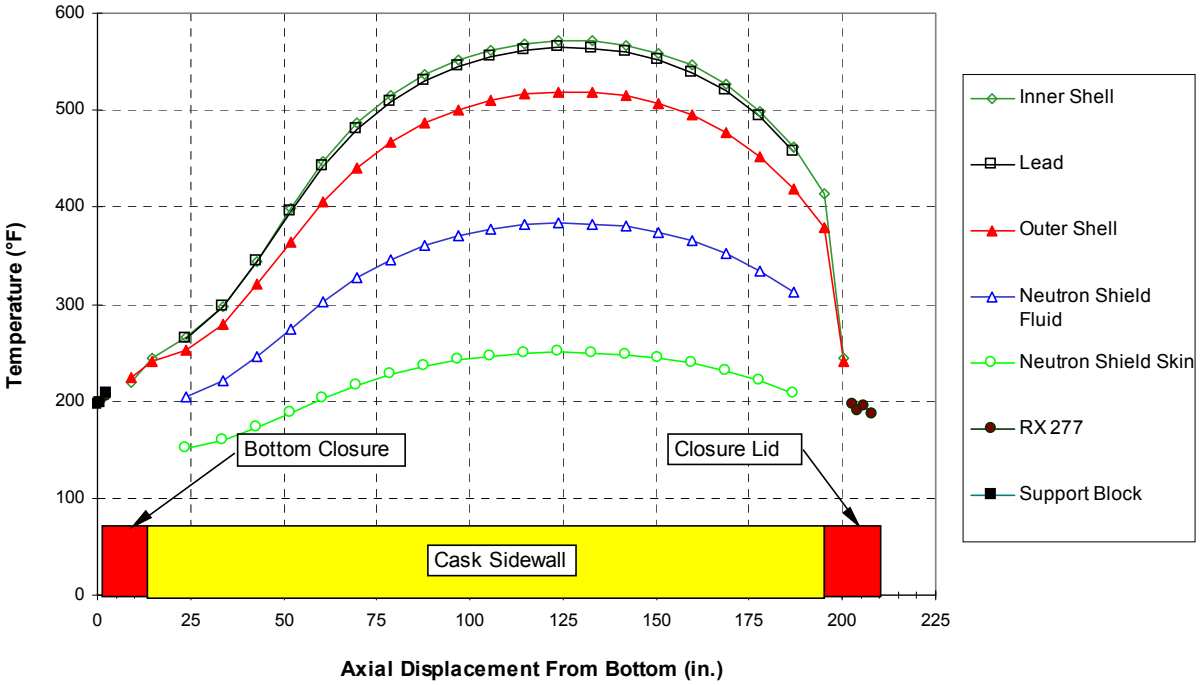

Figure 4.6-11 - Axial Temperature Distribution (Case 18, 28 kW)

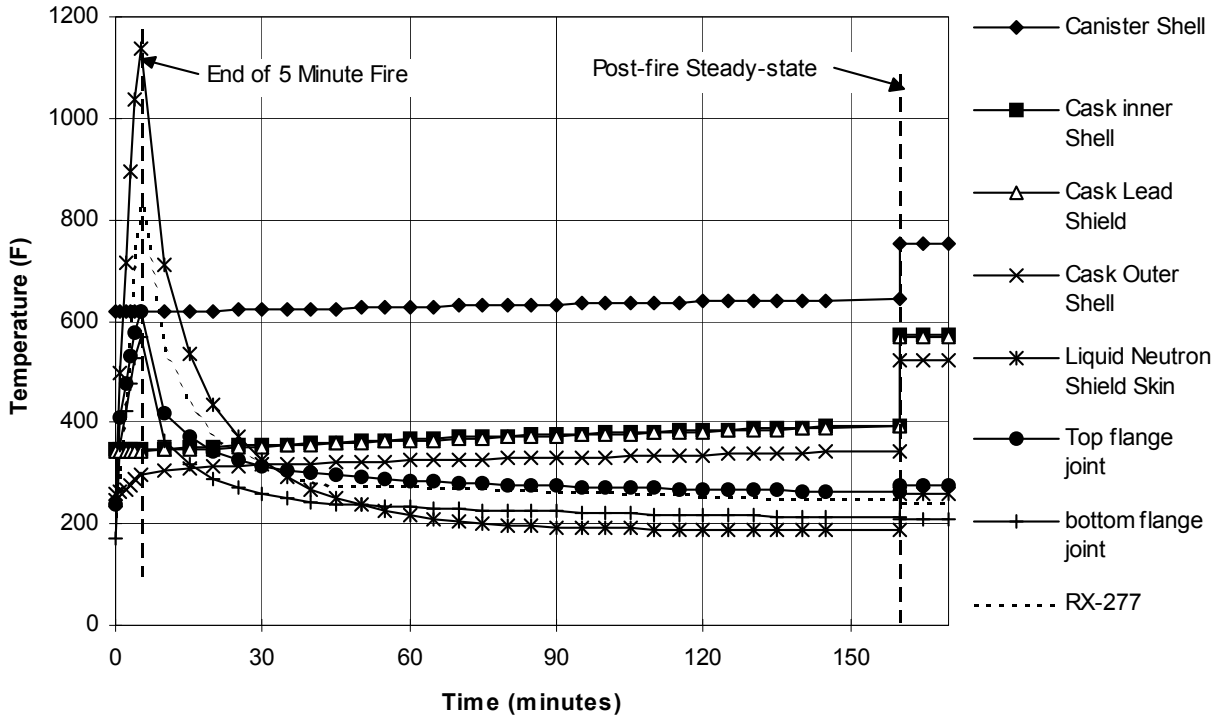

Figure 4.6-12 - Transfer Cask Fire Transient Component Temperatures (t ≤ 160 minutes)

4.7 Supplemental Data

4.7.1 SINDA/FLUINT® Computer Code Description

The analytical thermal models for the storage and transfer casks are developed using the SINDA/FLUINT®[2] heat transfer code. This finite difference, lumped parameter code was developed under the sponsorship of the NASA Johnson Space Center and has been evaluated and validated for simulating the thermal response of transportation packages.[23] The SINDA/FLUINT® code is used for the analysis of several other transportation packages for nuclear material, including the recently licensed RTG transportation cask.

The SINDA/FLUINT® code provides the capability to simulate steady-state and transient temperatures using temperature dependent material properties and heat transfer via conduction, convection, and radiation. Complex algorithms may be programmed into the solution process for the purposes of computing the various heat transfer coefficients as a function of geometry, fluid, and temperatures or, for example, to estimate the effects of buoyancy driven heat transfer. SINDA/FLUINT® is capable of 3-D steady-state and transient calculations, and its use is appropriate for the calculations being performed.

A major feature of the SINDA/FLUINT® code utilized for this modeling is the ability to use submodels to represent common geometry sections of the SNF package and then to connect the individual submodels to form a complete model of the package. This approach simplifies the modeling and verification process by minimizing the amount of original coding required to provide a complete thermal representation of the system.

The SINDA/FLUINT® code has been verified in accordance with the quality assurance program discussed in Chapter 13 of this FSAR. The solutions to a representative set of sample problems using the SINDA/FLUINT® code were shown to be substantially identical to the results published in technical literature.

[23] SAND88-0380, R. E. Glass, et. al., *Standard Thermal Problem Set for the Evaluation of Heat Transfer Codes Used in the Assessment of Transportation Packages*, Sandia National Laboratories, August 1988.

This page intentionally left blank.

5. SHIELDING EVALUATION

This chapter presents the shielding evaluation for the FuelSolutions™ Storage System. It includes a description of the system's major shielding design features, including the FuelSolutions™ W150 Storage Cask and the FuelSolutions™ W100 Transfer Cask, which are designed to safely load, transfer, and store FuelSolutions™ canisters at an ISFSI. This chapter also describes the methodology used to prepare the SNF cooling tables, which are the primary method of controlling radiological and thermal source terms for SNF to be stored in FuelSolutions™ canisters. This chapter plus Chapter 5 of the respective FuelSolutions™ Canister Storage FSARs together provide the complete shielding evaluation.

This chapter of the FuelSolutions™ Storage System FSAR contains descriptions of:

- The shielding design features for the FuelSolutions™ Storage System components.
- The fuel cooling tables and how they are derived.
- The source term calculations used to construct fuel cooling tables.
- The shielding analysis, assumptions, and shielding results for the FuelSolutions™ W100 Transfer Cask with a representative FuelSolutions™ canister, including side wall, end, and canister closure dose analyses.
- The shielding analysis, assumptions, and shielding results for the FuelSolutions™ W150 Storage Cask with a representative FuelSolutions™ canister, including side wall, air inlet/outlet penetration, and top end dose analyses.
- Shielding analysis methodologies and assumptions utilized.

Chapter 5 (Shielding Evaluation) of each FuelSolutions™ Canister Storage FSAR contains:

- The fuel cooling tables for the subject FuelSolutions™ canister.
- A discussion of the canister-specific shielding calculations used to construct the fuel cooling tables.
- Unique shielding calculations for the FuelSolutions™ W100 Transfer Cask and W150 Storage Cask if the canister significantly differs from the representative FuelSolutions™ canister used for the Storage FSAR analyses.
- A discussion of any differences with the generic methodology described herein.

Chapter 10 (Radiation Protection) of this FSAR contains discussions of:

- The estimated occupational and public exposures for the FuelSolutions™ Storage System for normal conditions based on the shielding evaluations described in this chapter.
- The estimated radiological consequences for postulated accident conditions (results for individual FuelSolutions™ canisters are contained in Chapter 10 of the corresponding FuelSolutions™ canister storage FSAR).

This page intentionally left blank.

5.1 Discussion and Results

The FuelSolutions™ Storage System is designed to accommodate a wide variety of fuel assembly classes and types in several different FuelSolutions™ canister designs. Because this broad fuel acceptance approach requires considerable comprehensive analysis as a basis, a summary discussion of the FuelSolutions™ approach to fuel qualification is appropriate before discussing the details of the calculations.

Dry spent fuel storage systems licensed to date have typically relied on a "design basis fuel assembly" approach wherein the fuel parameters (fuel type, burnup, enrichment, and cooling time) and the fuel properties (gamma source and spectrum, neutron source and spectrum, heavy metal content and heat load) all form the basis for the *technical specification* limits used for fuel assembly acceptance. This is done to assure that system dose rates and temperatures do not exceed the values calculated for the design basis assembly. The benefits of this approach are simplicity and suitability for single-plants or fuel types. The disadvantages are that significant amounts of SNF fall into the "unnecessarily disqualified" category (i.e., the fuel falls outside the parameters of the design basis assembly, but within safety parameters for the system). In addition, there are related impacts on both operating and decommissioning plants of not being able to dry store SNF which otherwise would be qualified. The fuel qualification calculations which utilities must perform for each cask/canister loading to qualify SNF to the requirements of their *technical specifications* are also significant.

The approach used to determine fuel assembly acceptance for the FuelSolutions™ Storage System is an integrated "fuel qualification" approach. Primary system safety parameters, such as component dose rates and heat loads, form the basis for fuel acceptance. Discrete analysis is performed to develop fuel cooling tables for each FuelSolutions™ canister which "pre-qualify" cooling times for a broad range of fuel assembly classes, given their burnup and enrichment. These analyses incorporate all of the characteristics of each qualified fuel assembly class over the range of initial enrichments and burnups of interest. In addition, the cooling time which satisfies the allowable component dose rates and heat load is determined for each initial enrichment and burnup combination. Thus, any fuel assembly which meets the required cooling time satisfies the safety constraints used to construct the cooling table. This integrated fuel qualification approach has the benefit of reducing the number of "bounding assembly" assumptions (thus the number of unnecessarily disqualified fuel assemblies). It also allows a greater percentage of the fuel assemblies which currently reside in commercial power reactor spent fuel pool inventories to be qualified for storage (thus reducing dose by allowing more older, colder fuel to be qualified). In addition, it eliminates the need for supplemental qualification calculations to be performed by the licensee prior to each canister loading, which is current practice.

The hierarchy of requirements for qualifying SNF for storage in a FuelSolutions™ canister is as follows. The acceptance specifications for FuelSolutions™ canister contents, including the acceptable intact Zircaloy-clad SNF assembly classes are found in the *technical specifications* in Chapter 12 of each FuelSolutions™ Canister Storage FSAR. These *technical specifications* include the corresponding fuel cooling tables and maximum enrichment tables (for criticality) obtained from Chapters 5 and 6 of the same FSAR, respectively. The cooling tables define required cooling times which satisfy the system safety acceptance basis.

The radiological acceptance basis used to construct the cooling tables is the calculated dose rate on the storage cask side surface over the peak burnup section of the fuel, which occurs near the cask midplane (mid-height). This criterion is selected primarily to limit off-site direct doses to the public at the controlled area boundary of a typical ISFSI. It also serves to maintain the storage cask and transfer cask surface doses which affect the public and operating personnel ALARA during canister loading, closure and transfer operations. The storage cask dose rate acceptance criterion is 50 mrem/hr on the storage cask side for all FuelSolutions™ canisters.

A maximum average storage cask top surface dose rate of 50 mrem/hr is also specified in the *technical specifications* (given in Chapter 12). However, this dose rate criterion is never the (limiting) basis that determines allowable fuel payloads for the FuelSolutions™ canisters. As presented in this section, the dose rates on the cask top are well under 50 mrem/hr for all FuelSolutions™ canisters and all allowable fuel payloads. Shielding calculations will verify that this is the case for any future FuelSolutions™ canisters.

The thermal acceptance basis used to construct the cooling tables is the maximum canister heat load which satisfies all of the allowable temperature criteria for fuel cladding and FuelSolutions™ canister, storage cask, and transfer cask materials, as described in Chapter 4 of this FSAR. The greater of the resulting cooling times derived from the radiological and thermal evaluations is entered into the fuel cooling table.

5.1.1 Storage Cask

The FuelSolutions™ W150 Storage Cask is a reinforced concrete storage overpack designed to provide biological shielding, physical protection, and decay heat removal for one FuelSolutions™ canister containing SNF or high level waste, as described in Section 1.2.1.1. Drawings for the storage cask are provided in Section 1.5.1 of this FSAR.

The shielding design features of the storage cask are indicated in Figure 5.1-1. They include thick reinforced concrete walls with an integral reinforced concrete bottom, an inner steel liner, and a shielded lid assembly. The storage cask requires less shielding thickness in the axial direction because FuelSolutions™ canisters have shield plugs on both ends that substantially attenuate the gamma flux. Cooling air flows into the inlet vent channels in the bottom end of the storage cask, through the canister-cask annulus, and then exits through the outlet vent ducts penetrations located near the top end of the cask. The arrangement of the ventilation openings is designed to minimize radiation streaming while maintaining the required flow area for passive cooling.

The adequacy of the FuelSolutions™ storage cask shielding design and the resulting dose rates is demonstrated in Table 5.1-1. Shielding results, along with diagrams indicating dose point locations, are provided for a bounding fuel source term, and a typical source term more suitable for operational exposure estimates. Fuel source terms are discussed in Section 5.2.2. The shielding calculations predict a storage cask side wall dose rate (at the fuel midplane) of ~33 mrem/hr, which is well below the 50 mrem/hr acceptance criterion. Dose rates on the storage cask side wall in the vicinity of the fuel assembly top nozzles is at most ~44 mrem/hr. Thus, although the cask side dose rate criterion of 50 mrem/hr does not apply to localized sections of the cask surface, such as that in the vicinity of the assembly top nozzles, the calculations show that the storage cask side dose rates remain under 50 mrem/hr everywhere

(except at the outlet vents). This shows conservatism in the methodology used to generate the cooling tables. The shielding calculations used to generate the FuelSolutions™ canister cooling tables conservatively neglect the presence of the canister spacer plates. The R-Z cask shielding calculations whose results are presented in this chapter explicitly model the spacer plates. This is the primary reason that the calculated cask side dose rate (33 mrem/hr) is below the 50 mrem/hr dose rate criterion by a significant margin.

The bounding storage cask dose rates presented for each location in Table 5.1-1 are bounding for all FuelSolutions™ canister types and all acceptable fuel assembly payloads, as discussed in Section 5.1.3 of this FSAR.

5.1.2 Transfer Cask

The FuelSolutions™ W100 Transfer Cask is a steel-lead-steel cask with an integral liquid neutron shield designed to maintain occupational dose rates ALARA, and provide physical protection and a means of decay heat removal for the canister during loading, closure, and transfer operations, as described in Section 1.2.1.2. Drawings for the transfer cask are provided in Section 1.5.1 of this FSAR.

Figure 5.1-2 shows the major shielding design features of the transfer cask. They include thick gamma shielding, primarily in the radial direction, and hydrogenous neutron shielding in all directions. In order to protect the canister's outer surface and the transfer cask's inner surface from radioactive contamination, an inflatable annulus seal is placed between the top end of the canister shell and the inside surface of the transfer cask prior to immersion in the spent fuel pool. The seal prevents ingress of contaminated water because it is pressurized to press against the canister and cask, and backed by clean water in the annulus. It is recommended that a positive head of clean water be maintained in the annulus via an external head tank to provide redundant protection against contamination.

Table 5.1-2 summarizes the calculated dose rates for the FuelSolutions™ W100 Transfer Cask. The locations at which the dose rates shown in Table 5.1-2 are calculated are illustrated in Figure 5.1-3. Shielding results, along with diagrams indicating dose point locations, are provided for a bounding fuel source term and a typical source term more suitable for operational exposure estimates. Fuel source terms are discussed in Section 5.2.2. The bounding transfer cask dose rates presented for each location in Table 5.1-2 are bounding for all FuelSolutions™ canister types and all acceptable fuel assembly payloads.

5.1.3 Adjustments to Storage and Transfer Cask Dose Rates

As discussed in Section 5.2.2.1, the primary forward storage and transfer cask shielding analyses are based upon a FuelSolutions™ W21 canister containing PWR fuel with bounding and typical source strengths. The bounding case is based upon one of the radiologically limited points in the FuelSolutions™ W21 canister cooling tables.

At some storage and transfer cask locations, however, different FuelSolutions™ canisters or fuel payloads yield higher total dose rates than the W21 canister bounding case. The cooling table calculations assure a bounding dose rate of 50 mrem/hr or less for the storage cask side. For cask locations where the gamma dose rate is the primary contributor, the design basis W21 canister case (whose source strengths are described in Section 5.2) is the bounding case due to the high

gamma source strength of the PWR assembly nozzle regions. However, for locations where the neutron dose rate (and secondary gamma dose rate) makes up a significant portion of the total dose rate, other canister types or fuel payloads may yield higher total dose rates.

Maximum burnup fuel payloads (60 GWd/MTU) yield the highest neutron dose rates on the cask exteriors, even though the maximum burnup levels are thermally limited in the cooling tables (making their storage cask side dose rates less than 50 mrem/hr). Also, BWR fuel generally yields higher neutron source strengths than PWR fuel, for cases where the gamma source strengths are equivalent.

For the above reasons, the canister types and fuel payloads other than the design basis case (i.e., the W21 canister with the source terms described in Section 5.2) yield higher total dose rates for some cask exterior locations. For this reason, the bounding case gamma and neutron dose rates output by the shielding analyses, which are based upon the design basis canister type and fuel payload, are adjusted by various factors at different detector locations to ensure that the (bounding case) total dose rates presented in Table 5.1-1 and Table 5.1-2 are bounding for all canister types and acceptable fuel assembly payloads. The typical case dose rates presented in Table 5.1-1 and Table 5.1-2 are based upon the W21 canister loaded with typical PWR fuel. The typical case gamma dose rates for the inlet and outlet vents are assumed to equal 40% of the bounding case values. This is the ratio of the typical case assembly nozzle gamma source strengths over the bounding case assembly nozzle source strengths. The assembly nozzles are a dominant contributor to the vent dose rates. The typical case cask side dose rates are less than 40% of the bounding case values, so the 40% assumption is considered a conservative estimate.

For the storage cask, dose rates at most locations are dominated by the gamma dose rate, and the W21 canister case that was analyzed in the shielding calculations is the bounding case. Therefore, no dose rate adjustments are required. However, for the storage cask top, the W74 canister yields gamma dose rates that are 15% higher and neutron dose rates that are a factor of 14.33 higher than those of the design basis (W21 canister) case. Therefore, all storage cask top end dose rates are increased by these factors, as noted in Table 5.1-1.

The transfer cask has a larger number of detector locations (as compared to the storage cask), and a large number of locations where different canister and fuel payload cases are bounding. Table 5.1-3 shows the gamma and neutron dose rate adjustments that are applied for each transfer cask location listed in Table 5.1-2. For each location, the unadjusted gamma and neutron dose rates directly output by the shielding analyses (i.e., the dose rates that are based upon the design basis case of a W21 canister with a dose-limited payload) are listed. Then, the gamma and neutron adjustment factors that are shown are applied for each location. Finally, the tables multiply the unadjusted dose rates by the adjustment factors and show the final adjusted gamma and neutron dose rates in the right two columns. These are the same dose rates that appear in Table 5.1-2. Locations that are not adjusted (i.e., where the design basis W21 case was bounding) simply have a value of 1.0 shown for the adjustment factor.

For each transfer cask location, the gamma and neutron adjustment factors shown in Table 5.1-3 are based upon the canister type and fuel payload that yield the maximum total dose rate at that location. The bounding total dose rate case does not necessarily yield bounding values for each of the radiation types (i.e., gamma and neutron). For many locations, the bounding canister and fuel payload yields gamma dose rates that are somewhat lower than those of the design basis

case, but the neutron dose rates are higher. For this reason, the gamma adjustment factors are below 1.0 for many of the locations listed in Table 5.1-3.

These adjustment factors are calculated and applied to ensure that bounding total dose rates (for any FuelSolutions™ canister type and any allowable fuel assembly payload) are presented in Table 5.1-1 and Table 5.1-2 for each detector location and cask configuration. It should be noted that this dose rate data is primarily used for the occupational exposure calculations. These calculations only consider the total dose rate, and do not depend on the gamma and neutron dose rate breakdown.

Table 5.1-1 - Estimated Storage Cask Dose Rates

Location (see legend)	Dose Rate (mrem/hr)					
	Bounding[1]			Typical[2]		
	n	γ[3]	Total	n	γ[3]	Total
1. Wall, surface at midplane	0.09	32.6	32.7	0.17	7.6	7.8
2. Wall, average contact over full surface w/vents	0.05	28.6	28.7	0.09	8.1	8.2
3. Wall, 1 m from surface	0.04	17.7	17.7	0.07	4.1	4.2
4. Top end, contact at center[4]	1.6	7.2	8.8	0.21	2.9	3.1
Top end, center contact (cask lid removed)[4]	736	5100	5836	97.6	1690	1788
5. Top end, average contact over full surface[4]	2.8	16.1	18.9	0.37	5.4	5.8
6. Top end, 1 m above cover[4]	2.0	5.1	7.1	0.27	1.8	2.1
Top end, 1 m above top (cask lid removed)[4]	208	2721	2929	27.5	901	929
7. Air inlet, average over screen	< 1.0	13	14	< 1.0	5.2[5]	6.2
8. Air inlet, 1 m from screen	< 1.0	5.5	6.5	< 1.0	2.2[5]	3.2
9. Air outlet, average over screen	< 1.0	509	510	< 1.0	204[5]	205
10. Air outlet, 1 m from screen	< 1.0	340	341	< 1.0	136[5]	137
11. Bottom end, ram access, average over penetration opening at bottom plane	90	2530	2620	171	946	1117

Notes:

(1) Bounding dose rates are based upon the canister type and fuel payload that yields maximum total dose rates at each location. Dose rates are calculated based upon the FuelSolutions™ W21 canister loaded with 4.5% enriched, 36 GWd/MTU PWR fuel cooled to 4.0 years, which bounds all allowable payloads for the W21 canister. This canister and fuel payload produce bounding total dose rates at all locations except the cask top (see Note 4).

(2) Typical storage dose rates suitable for overall ISFSI dose planning purposes. Assumes FuelSolutions™ W21 canister with 10-year cooled 3.5% enriched, 36 GWd/MTU PWR fuel.

(3) Includes secondary gamma.

(4) The storage cask top end gamma dose rates shown have been increased by 15% to bound the W74 canister case, as discussed in Section 5.1.3 of this FSAR. The neutron dose rates shown have been increased by a factor of 14.33.

(5) Assumed to equal 40% of the bounding case values (see Section 5.1.3).

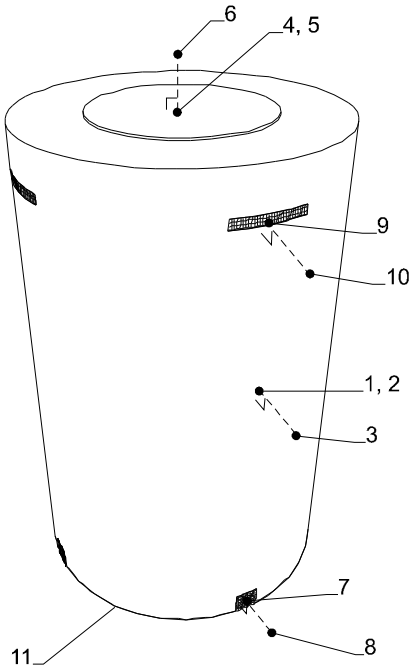

Table 5.1-2 - Estimated Transfer Cask Dose Rates

Location (see Figure 5.1-3)	Dose Rate (mrem/hr)					
	Bounding[1]			Typical[2]		
	N	γ[3]	Total	N	γ[3]	Total
1. Side, contact						
a) n-shield full, annulus full, cavity full	6	213	219	2.6	54.6	57.2
b) n-shield full, annulus full, cavity drained	180	500	680	77	128	205
c) n-shield full, annulus drained, cavity drained	281	545	826	119	140	259
d) n-shield drained, annulus full, cavity full	47	300	347	19.9	76.9	96.8
e) n-shield, annulus, and cavity drained	6,359	416	6,776	1,690	187	1,877
2. Side, 1 m						
a) n-shield full, annulus full, cavity full	2.1	96.5	98.6	0.9	24.8	25.7
b) n-shield full, annulus full, cavity drained	62	225	287	26.4	57.8	84.2
c) n-shield full, annulus drained, cavity drained	98	244	342	41.0	56.2	97.2
d) n-shield drained, annulus full, cavity full	15	138	153	6.3	35.3	41.6
e) n-shield, annulus, and cavity drained	2,062	193	2,255	548	87	635
3. Top centerline, contact						
a) canister shield lid, cavity full - 5” above lid	<0.01	1,496	1,496	<0.01	369	369
b) canister shield lid, cavity drained to 1” below lid	<0.01	3,160	3,160	<0.01	780	780
c) canister inner closure plate, cavity drained 1”	<0.01	101	101	<0.01	24.9	24.9
d) canister inner closure plate, cavity fully drained	189	328	517	23	90	113
e) canister outer closure plate, cavity fully drained	119	42	161	14.7	11.4	26.2
f) transfer cask lid - dry cavity - all lids in place	53.9	9.5	63.4	6.7	2.6	9.2
g) dry canister in cask - ram access lid removed	1,062	400	1,462	131	110	241
4. Top centerline, 1meter from surface						
a) canister shield lid, cavity drained 1” below lid	<0.01	1,311	1,311	<0.01	323	323
b) canister inner closure plate, cavity drained 1”	<0.01	62.3	62.3	<0.01	15.4	15.4
c) canister inner closure plate, cavity fully drained	77	212	289	9.5	58.0	67.5
d) canister outer closure plate, cavity fully drained	52	49	101	6.4	13.4	19.8
e) transfer cask lid - dry cavity - all lids in place	17.5	4.4	21.9	2.2	1.0	3.2
f) dry canister in cask - ram access lid removed	87	52	139	10.7	14.3	25.1
5. Bottom centerline, contact						
a) transfer cask lid - dry cavity - all lids in place	163	49	212	24.3	16.3	40.6
b) dry canister in cask - bottom cover lid removed	2,488	2,373	4,861	370	793	1,163
6. Bottom centerline, 1 meter from surface						
a) transfer cask lid - dry cavity - all lids in place	64.4	21.9	86.3	9.6	6.8	16.4
b) dry canister in cask - bottom cover lid removed	50	1,984	2,034	95	345	440

Notes:

(1) Dose rates calculated based upon a FuelSolutions™ W21 canister loaded with 36 GWd/MTU, 4.5% enriched, 4-year cooled PWR fuel. These dose rates are then adjusted to bound any FuelSolutions™ canister type and allowable fuel payload, as shown in Table 5.1-3.

(2) Typical case dose rates are based upon a FuelSolutions™ W21 canister loaded with typical PWR fuel. Typical case dose rates are discretely calculated for the dry transfer cask with all lids in place. The reduction observed for the top, side, and bottom dose rates (typical/maximum) on the dry cask is applied to the bounding dose rates at other locations to estimate the typical dose rates for other cask configurations.

(3) Includes secondary gamma.

Table 5.1-3 - Adjustments to Bounding Transfer Cask Dose Rates

Table 5.1-2 Detector Location	Calculated Gamma Dose Rate	Calculated Neutron Dose Rate	Gamma Adjustment Factor	Neutron Adjustment Factor	Final Gamma Dose Rate	Final Neutron Dose Rate
1a	1.54E+02	1.37E+00	1.38	4.52	213	6.2
1b	3.62E+02	3.99E+01	1.38	4.52	500	180
1c	3.95E+02	6.21E+01	1.38	4.52	545	281
1d	2.17E+02	1.04E+01	1.38	4.52	300	47.0
1e	5.27E+02	8.82E+02	0.79	7.21	416	6,359
2a	6.99E+01	4.70E-01	1.38	4.52	96.5	2.1
2b	1.63E+02	1.38E+01	1.38	4.52	225	62.4
2c	1.77E+02	2.16E+01	1.38	4.52	244	97.6
2d	9.97E+01	3.27E+00	1.38	4.52	138	14.8
2e	2.44E+02	2.86E+02	0.79	7.21	193	2,062
3a	1.50E+03	5.41E-05	1.0	1.0	1,496	< 0.01
3b	3.16E+03	1.45E-03	1.0	1.0	3,160	< 0.01
3c	1.01E+02	2.62E-04	1.0	1.0	101	< 0.01
3d	3.64E+02	1.23E+01	0.90	15.35	328	189
3e	4.64E+01	7.76E+00	0.90	15.35	41.8	119
3f	1.05E+01	3.51E+00	0.90	15.35	9.5	53.9
3g	4.44E+02	6.92E+01	0.90	15.35	400	1,062
4a	1.31E+03	3.55E-04	1.0	1.0	1,311	< 0.01
4b	6.23E+01	1.06E-04	1.0	1.0	62.3	< 0.01
4c	2.35E+02	5.03E+00	0.90	15.35	212	77.2
4d	5.43E+01	3.36E+00	0.90	15.35	48.9	51.6
4e	4.92E+00	1.14E+00	0.90	15.35	4.4	17.5
4f	5.81E+01	5.65E+00	0.90	15.35	52.3	86.7
5a	9.38E+01	1.28E+01	0.52	12.76	48.8	163
5b	4.56E+03	1.95E+02	0.52	12.76	2,373	2,488
6a	4.21E+01	5.05E+00	0.52	12.76	21.9	64.4
6b	1.98E+03	5.00E+01	1.0	1.0	1,984	50.0

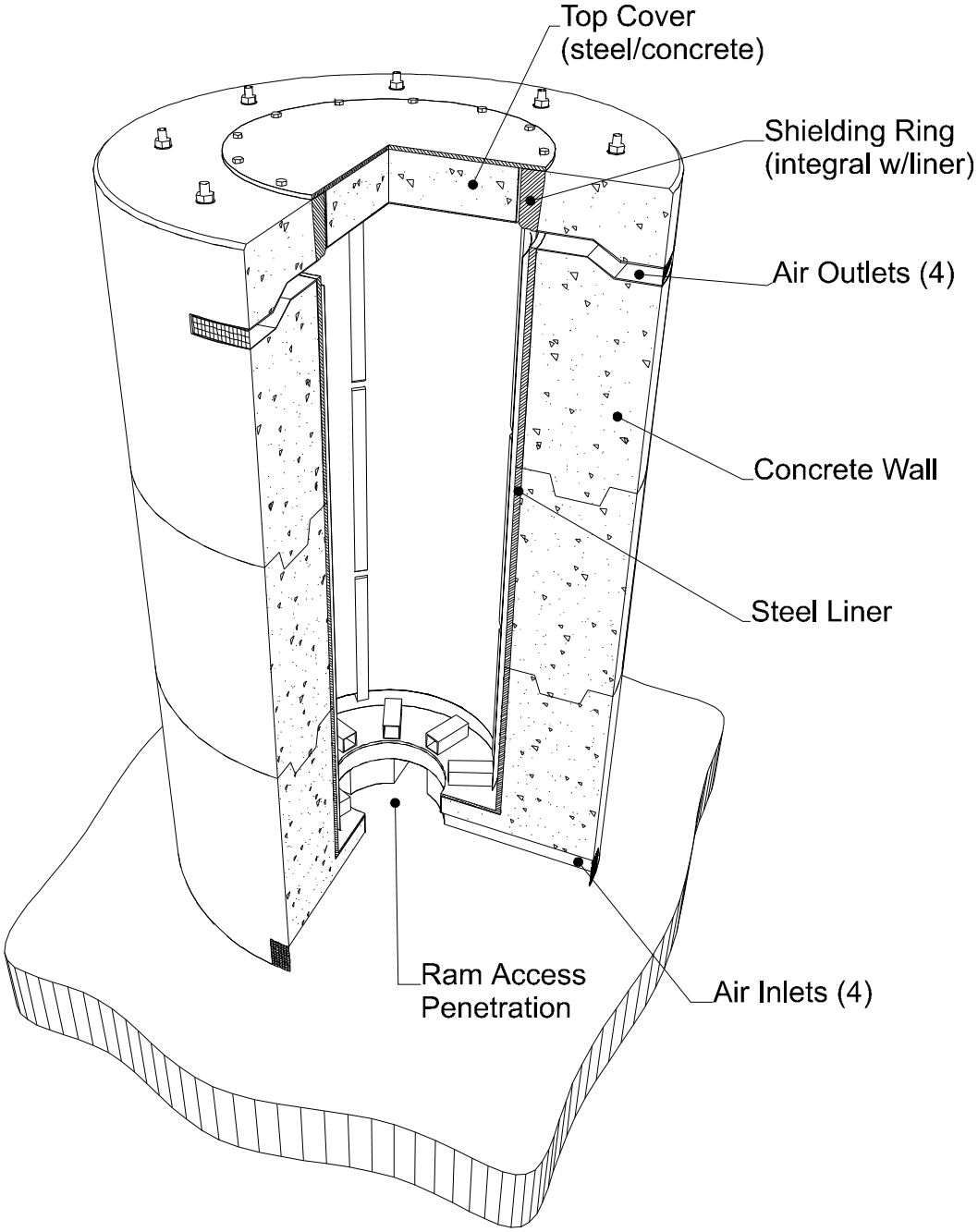

Figure 5.1-1 - FuelSolutions™ W150 Storage Cask Shielding Design Features

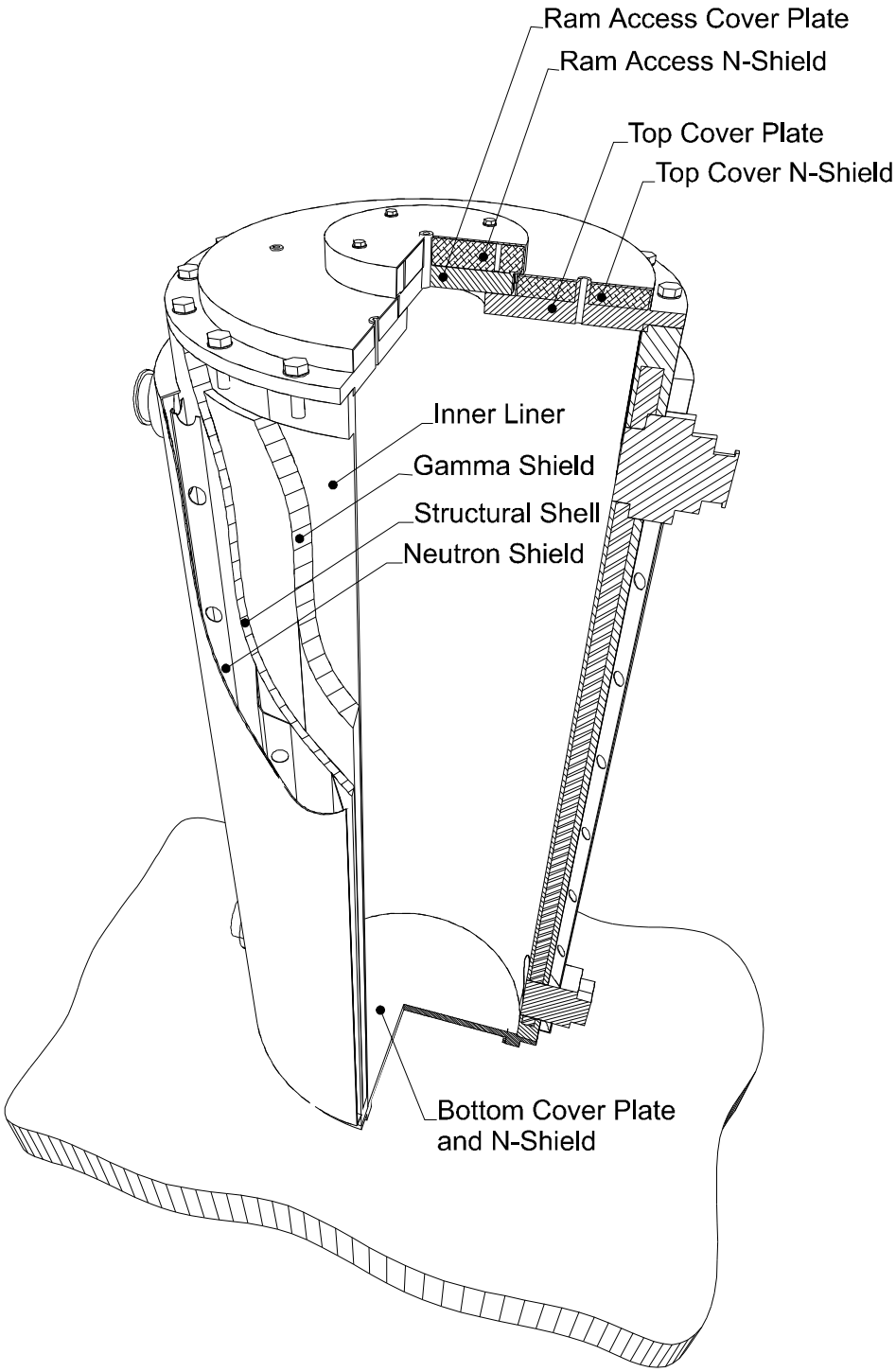

Figure 5.1-2 - FuelSolutions™ W100 Transfer Cask Shielding Design Features

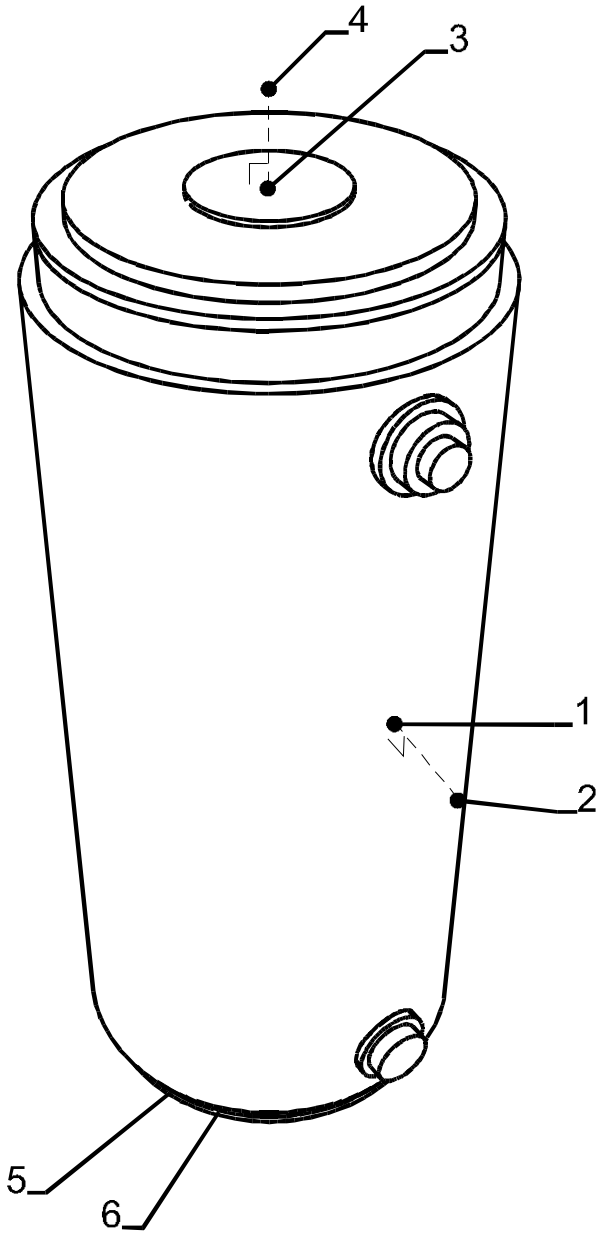

Figure 5.1-3 - Transfer Cask Dose Rate Calculation Locations

This page intentionally left blank.

5.2 Source Specification

5.2.1 Method of Source Specification

5.2.1.1 Fuel Cooling Tables

This section describes the generic methodology for constructing FuelSolutions™ fuel cooling tables for dry storage. Since the fuel cooling tables themselves are canister-dependent, they are presented in Chapter 5 of each FuelSolutions™ Canister Storage FSAR along with a description of the canister-unique parameters used for their construction.

Radiological and thermal source terms for SNF to be dry stored in FuelSolutions™ canisters are driven by the characteristics of the fuel assembly including: reactor type, initial enrichment, burnup, and post irradiation cooling time. The fuel cooling tables control the source terms by specifying the minimum cooling time required for the fuel assembly to meet the radiological and thermal acceptance criteria, for a given reactor type (fuel assembly class), burnup, and enrichment. Fuel cooling tables are designed to limit the calculated storage cask surface dose at the cask midplane to the maximum allowable dose rate or less, depending on whether the required cooling time is governed by heat removal or radiation dose rate requirements. The storage cask dose rates used for this purpose correspond to the normal conditions of operation during dry storage. Dose rates for off-normal and postulated accident conditions are addressed in Sections 11.1 and 11.2 of this FSAR.

The fuel cooling tables do not specify maximum SNF enrichments; and the inclusion of an enrichment in the fuel cooling table does not imply acceptability of that enrichment from a criticality safety standpoint. The *technical specifications* in Chapter 12 of each FuelSolutions™ Canister Storage FSAR provide the enrichment limits for fuel qualification.

Since each FuelSolutions™ canister has a different physical layout, and each canister loading specification may differ in thermal or radiological performance, there is a separate cooling table for each canister type, each qualified fuel assembly class, and loading specification.

5.2.1.2 Construction of the Fuel Cooling Tables

Figure 5.2-1 shows schematically how the fuel cooling tables are derived. The following paragraphs describe the relation between the data library, shielding transport calculations, and the source term calculations used to produce the fuel cooling tables.

Ⓐ *Generic Decay Calculations*

For each state point (burnup, enrichment pair) on the FuelSolutions™ fuel cooling tables, a generic library of neutron, gamma, and heat source term data vs. cooling time is developed. These data are generic because they are derived on a per MTIHM of PWR or BWR fuel, which is similar in approach to existing libraries used in the industry, such as the OCRWM Database.[1] The source term calculations are performed using ORIGEN2.1.[2]

[1] *Characteristics of Potential Repository Wastes*, DOE/RW-0184-R1, Oak Ridge National Laboratory, Oak Ridge, Tennessee, July 1992.

The resulting generic decay library is used to produce the fuel cooling tables and the source terms used for forward shielding calculations. See Section 5.2.2 for further discussion.

Ⓑ *Canister/Storage Cask Adjoint Calculations*

Adjoint shielding calculations are performed by running the shielding transport codes in "adjoint mode" to obtain importance functions given flux-to-dose conversion factors. The adjoint shielding calculations are run for each FuelSolutions™ canister in the storage cask to establish a set of importance functions by energy group. These importance functions can be readily folded with source terms (i.e., the generic decay calculations) to arithmetically compute the storage cask side wall dose rate for a given cooling table state point. In this manner, fuel cooling tables can be constructed without the need for large numbers of forward transport cases. The adjoint calculations are used to specify fuel cooling times, but not to estimate system dose rates. See Sections 5.3.2.1 and 5.4.1.1, and Figure 5.3-1 for further discussion.

Ⓒ *Heat Load Qualifications*

Each FuelSolutions™ system component is analyzed to determine the maximum allowable heat load which satisfies all of the fuel cladding and component materials allowable temperatures for all normal, off-normal, and accident conditions. By taking the most limiting of the storage cask and canister or the transfer cask and canister, an overall maximum allowable heat load for the canister is determined. This maximum allowable heat load is used as the acceptance basis for generating the associated fuel cooling table. See Chapter 4 of this FSAR for the determination of the maximum allowable heat load for the storage cask and transfer cask. See Chapter 4 of the respective FuelSolutions™ Canister Storage FSAR for the determination of the maximum allowable heat load for the canister.

Ⓓ *Fuel Cooling Tables*

Fuel cooling tables specify the minimum cooling time to satisfy thermal and radiological acceptance criteria. There is one fuel cooling table per fuel loading specification per FuelSolutions™ canister. The corresponding fuel cooling tables are derived as described in this section.

Ⓔ *Forward Shielding Calculations*

Forward shielding calculations are performed by running the shielding transport codes in "forward mode" to obtain fluxes for a given set of radiological source terms. The fluxes are converted to biological dose rates using the appropriate flux-to-dose conversion factors. The forward shielding calculations are performed to determine component dose rates for two cases: a bounding source term (one which would produce a dose rate of at least 50 mrem/hr on the storage cask side), and a more typical source term of 10-year

[2] *ORIGEN2.1 Isotope Generation and Depletion Code Matrix Exponential Method*, RSICC Code Package CCC-371, Radiation Shielding Information Code Center, Oak Ridge, Tennessee.

cooled 3.5% ^{235}U enriched SNF assembly at 36,000 MWd/MT burnup. The results of the forward cases are used to estimate operational and off-site dose rates described in Chapter 10 of this FSAR.

Fuel cooling tables are prepared using the steps described below, which is repeated for every state point on the table. It is important to note that since this calculation is done on an energy groupwise basis, all spectral effects across the range of burnup and enrichments in the fuel cooling table are intrinsically taken into account.

1. Establish the acceptance criterion:
   - Storage cask side wall allowable dose rate
   - Maximum allowable canister heat load (both bulk and linear).
2. Pick a small initial value for the cooling time.
3. Look up the source terms (heat, neutron, and gamma per MTIHM) for this state point.
4. Multiply the heat source term by the heavy metal content (MTIHM) per SNF assembly, then by number of assemblies per canister.
5. Compare the canister heat load with the maximum allowable heat load.
6. Calculate the storage cask side wall dose rate using adjoint importance functions and look-up source terms. Other effects such as activation products, subcritical multiplication, etc. are accounted for as described in Section 5.2.1.3.
7. Compare the storage cask dose rate with the maximum allowable dose rate.
8. If the results of steps 5 or 7 are unacceptable, increase the cooling time and go back to step 3 until the resulting heat load and dose rate do not exceed the maximum allowable values.

The tool used to automate production of the cooling tables is an Energy*Solutions* proprietary computer code named ADSORB. ADSORB combines the shielding and thermal acceptance criterion, the adjoint shielding results (which are canister-unique importance functions or adjoint fluxes), and the generic decay library (decay heat, neutron and gamma source terms) to execute the steps described above. The output of the ADSORB code is the fuel cooling tables contained in Chapter 5 of each FuelSolutions™ Canister Storage FSAR.

ADSORB performs simple arithmetic calculations and does not perform heat transfer or radiological transport calculations. The output may be readily verified by hand for any state point using the following procedure. There are three factors, described in the next section, which must also be accounted for when manually reproducing ADSORB results.

1. Determine the source terms for the given state point (heat, neutron, and gamma per MTIHM) using the generic decay library, or another reference source.

   Multiply the heat source term by the MTIHM per SNF assembly, then by number of assemblies per canister.
2. Compare the resulting canister heat load with the maximum allowable heat load.
3. Multiply the gamma and neutron source terms by the MTIHM per SNF assembly.

4. Multiply the groupwise source terms for the fuel assembly ($sec^{-1} \cdot assy^{-1}$) by the adjoint fluxes, then sum to calculate the storage cask side wall dose rate.
5. Compare the storage cask dose rate with the maximum allowable dose rate.

In summary, cooling times for candidate SNF assemblies are qualified using fuel cooling tables prepared by the following steps:

1. Run an adjoint shielding model of the canister and storage cask to obtain adjoint fluxes corresponding to each candidate fuel assembly class and the associated FuelSolutions™ canister.
2. Run ORIGEN2.1 to obtain a database of SNF source terms and heat generation rates as a function of burnup and enrichment and cooling time on a generic "per MTIHM" basis for each candidate fuel assembly class. This is required only once to establish a data library.
3. Calculate the maximum canister heat generation rate given individual allowable maximum heat loads for the canister, storage cask, and transfer cask described in Chapters 4 of this FSAR, and the respective FuelSolutions™ Canister Storage FSAR.
4. Select a dose rate acceptance criterion for the storage cask side wall.
5. Using ADSORB and the data from items 1-4 above, construct the fuel cooling table by determining the minimum cooling time that satisfies dose rate and thermal acceptance criterion for each state point (combination of enrichment, burnup) on the cooling table.

5.2.1.3 Special Considerations for Fuel Cooling Tables

There are four areas where factors are included in the methodology to account for special considerations. These factors are included into ADSORB and should be used whenever constructing or verifying fuel cooling tables.

A. *Burnup-specific thermal peaking factor*
Thermal calculations to determine maximum allowable heat loads are performed using peaking profiles at a reference burnup of 44,000 MWd/MT (PWR fuels), and 29,000 MWd/MT (BWR fuels) as described in Section 4.1.3 of this FSAR. Fuels with lower burnup have more pronounced axial peaks. Maximum canister heat loads are specified in units of bulk Watts/canister. To assure that allowable system temperatures are not exceeded by specifying only the bulk heat loads, a penalty factor is assigned in ADSORB to reduce the allowable heat load in any burnup group less than the reference burnup values. Any burnup greater than the reference burnup values is acceptable because its axial peaking factor is bounded by that used in the thermal analysis.

B. *Assembly hardware heat generation factor*
The ORIGEN-2.1 code determines the thermal output of the fuel pellet material as a function of burnup, enrichment, and cooling time (on a per MTIHM of fuel basis). Some additional heat is generated in the fuel assembly hardware, an effect not treated by ORIGEN-2.1. The percentage of total assembly heat load generated by the fuel assembly hardware is presented

as a function of burnup in published reports.[3] The effects of fuel assembly hardware heat generation are treated in the cooling table calculations by adjusting the allowable assembly heat generation input into the ADSORB code downward. The allowable heat generation is set to equal the heat generation from the fuel pellet material for a fuel assembly whose overall heat generation level (including that from fuel assembly hardware) is equal to the heat generation level allowed by the thermal calculations. The percentage reduction applied to the assembly (fuel) allowable heat generation limits (that are input to ADSORB) are presented on a burnup specific basis in Chapter 5 of the individual FuelSolutions™ Canister Storage FSARs.

C. *Radiological peaking factors*
A factor is applied in ADSORB to the calculated storage cask dose rate to account for axial peaking. This is because the adjoint importance functions are derived using X-Y models that are not sensitive to axial variations.

D. *Activated SNF hardware*
The generic gamma source term library does not account for activation of cladding and other non-fuel material. When calculating gamma dose rates for comparison against the dose rate acceptance criteria, ADSORB multiplies the primary gamma dose rate by an adjustment factor to account for activation, and then adds the product to BUGLE energy group 57 (1.0-1.5 MeV) before summing the dose contribution from all gamma groups. The non-fuel assembly hardware gamma source strength, expressed as a fraction of the total fuel gamma source strength, is determined using the ORIGEN-2.1 code. The source strength fraction varies as a function of burnup, enrichment, cooling time, and the quantity of cobalt present in the assembly core region (including any inserted control components). When determining the required cooling time for each burnup/enrichment combination in the cooling tables, ADSORB uses an appropriate fuel assembly hardware gamma source strength fraction. Additional discussion of the source fraction calculation is provided in Section 5.5.3 of this FSAR. Correction factors for specific canisters are also discussed in Chapter 5 of each FuelSolutions™ Canister Storage FSAR.

E. *Subcritical neutron multiplication*
The generic gamma source term library does not account for subcritical neutron multiplication. When calculating neutron and secondary gamma dose rates, ADSORB multiplies these dose rates by a factor to account for subcritical multiplication. Adjustment factors for specific canisters are discussed in Chapter 5 of the respective FuelSolutions™ Canister Storage FSAR.

[3] Regulatory Guide 3.54, *Spent Fuel Heat Generation in an Independent Spent Fuel Storage Installation,* U.S. Nuclear Regulatory Commission, September 1984.

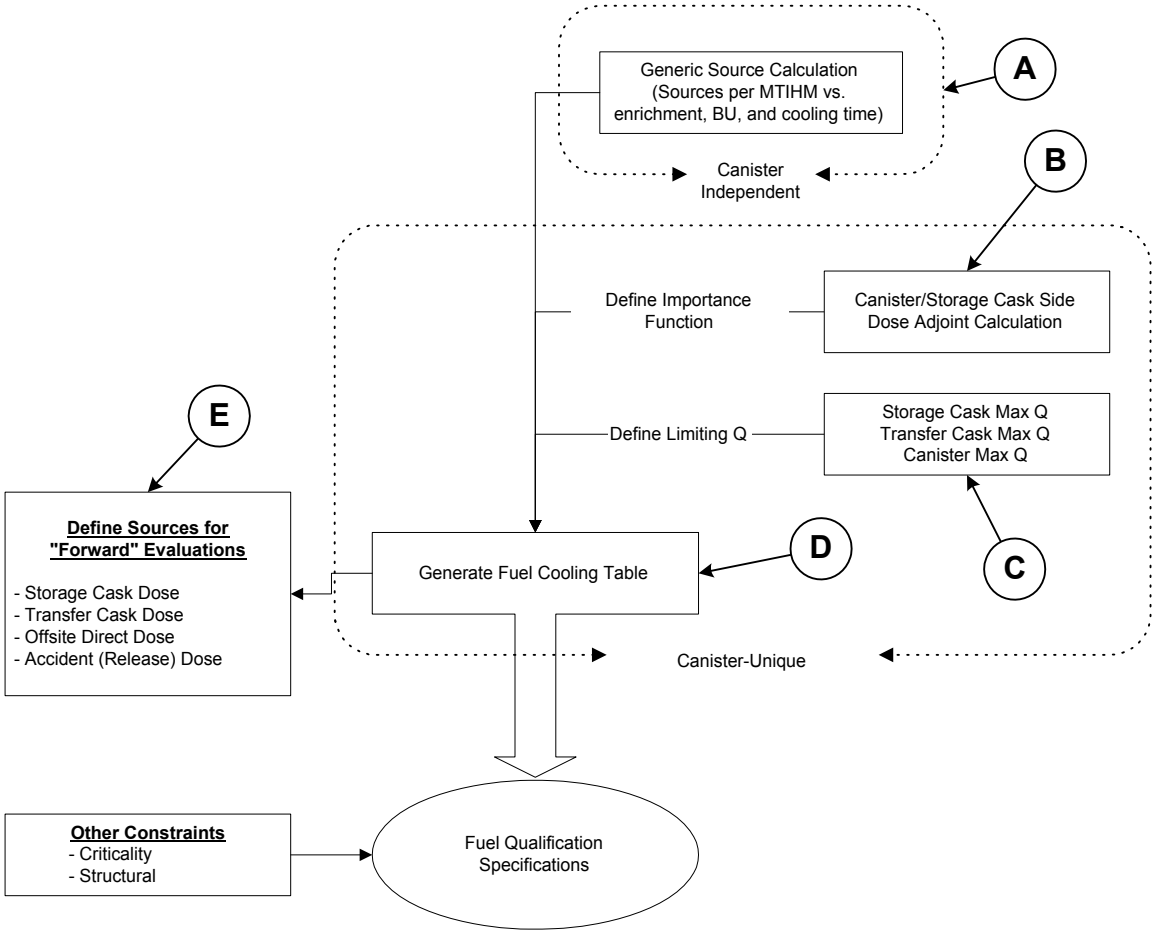

Figure 5.2-1 - Fuel Cooling Table Preparation Flowchart

5.2.2 Source Term Calculations

Generic PWR and BWR decay libraries for FuelSolutions™ UO_2 sources are created using ORIGEN-2.1. The data in the libraries are generated on a per MTIHM basis for either PWR fuel, or BWR fuel (hence two libraries), and include gamma sources, gamma energy spectra, neutron sources, decay heat generation rates, and radionuclide inventory for cooling times varying from one to eighty years. Although physical design and materials of construction vary from fuel assembly vendor to vendor or by fuel class, these differences have very little influence on the radiological properties of SNF.[4] Because the fuel cooling tables include extended burnup fuel, four ORIGEN-2.1 data libraries[5] are used:

- Standard PWR library (PWR-US) for burnups from 15,000-40,000 MWd/MTU (this ORIGEN-2.1 library is created using a 33,000 MWd/MT reactor model).
- Extended PWR library (PWR-UE) for burnups from 40,000-60,000 MWd/MTU (this ORIGEN-2.1 library is created using a 50,000 MWd/MT reactor model).
- Standard BWR library (BWR-US) for burnups from 15,000-34,000 MWd/MTU (this ORIGEN-2.1 library is created using a 27,500 MWd/MT reactor model).
- Extended BWR library (BWR-UE) for burnups from 34,000-60,000 MWd/MTU (this ORIGEN-2.1 library is created using a 40,000 MWd/MT reactor model).

Table 5.2-1 and Table 5.2-2 describe the assumptions and parameters used in the PWR and BWR per MTIHM of fuel source term calculations, respectively. Cycle burnup and enrichment values are specified as the desired parametric ranges as needed for the decay library. Although based on particular plant conditions, these input assumptions represent a reasonable basis for the generic source term calculations.

The generic decay library data are used in constructing the fuel cooling tables with ADSORB, and for developing source terms for the forward shielding cases. The library is valid over the range of fuel cooling table burnups because both extended and standard burnup libraries are used for its generation.

It should be noted that the assembly parameters shown in Table 5.2-1 and Table 5.2-2 only apply to the per-MTIHM source term calculations performed with the ORIGEN-2.1 code. Once the per-MTIHM source terms are determined, the shielding analyses assume bounding values for parameters such as uranium loading, core region cobalt quantity, and non-fuel region gamma source strengths. The assembly geometries described in Table 5.2-1 and Table 5.2-2 are assumed in the ORIGEN-2.1 libraries because they yield the maximum per-MTIHM source terms. These maximum per-MTIHM source terms are then multiplied by the maximum assembly uranium loadings (which actually occur for different fuel assembly types) to yield maximum possible per-assembly source strengths.

---

[4] *Characteristics of Potential Repository Wastes*, DOE/RW-0184-R1, Oak Ridge National Laboratory, Oak Ridge, Tennessee, July 1992.

[5] Ludwig, S. B., Renier, J. P., *Standard- and Extended-Burnup PWR and BWR Reactor Models for the ORIGEN2.1 Computer Code*, ORNL/TM-11018, Oak Ridge National Laboratories Oak Ridge, Tennessee, December 1989.

5.2.2.1 Fuel Source Parameters for Forward Calculations

All transfer cask cases, and all forward storage cask calculations are run using either of two fuel sources: a bounding source, or a typical source. The bounding fuel source is representative of the worst case shielding source term for any FuelSolutions™ canister whose fuel cooling tables are constructed using 50 mrem/hr as a storage cask dose rate acceptance criteria. The typical fuel source is chosen to represent a conservative average suitable for site dose estimates.

Unlike more traditional "design basis fuel assembly" approaches, it is necessary to specify which combination of burnup and enrichment (or state point) from the cooling tables to use as the basis for forward shielding calculations. This choice is relatively unimportant for storage cask calculations, because the cooling tables are designed for a single dose acceptance criteria on the storage cask side surface. The choice becomes more important for the transfer cask, because the ratio of neutron to gamma dose is higher.

For the storage cask, neutron dose is essentially negligible because of the thick concrete shielding. The cooling tables, therefore, primarily control gamma dose. For the transfer cask, gamma doses are relatively unaffected by the SNF state point. Certain regions on the cooling tables (i.e., low-enrichment/high-burnup) result in the highest neutron source terms. It is, therefore, the transfer cask shielding models that govern selection of which cooling table state point is chosen for the bounding SNF source terms. The radiologically limited state point with the highest burnup is selected as the bounding state point. This selection maintains the bounding gamma source strength (which occurs for all radiologically limited state points) while maximizing the neutron source strength.

It is important to note that, due to the way fuel cooling tables are constructed, higher burnups do not necessarily result in higher source terms because the minimum required decay times are derived to meet dose and thermal acceptance criterion.

A W21 canister loaded with 36 GWd/MTU, 4.5% enriched, 4-year cooled fuel is selected as the bounding case for the forward shielding analyses. This set of fuel parameters is radiologically limited (i.e., they produce a maximum storage cask side dose rate of 50 mrem/hr). This set of fuel parameters is conservative in that the thermal constraints actually require a cooling time of 4.6 years for 36 GWd/MTU, 4.5% enriched fuel. The radiological limits are just met at the 4-year cooling time. Higher burnup state points in the W21 cooling table will produce much lower cask side total dose rates because they are limited by the thermal constraints. Due to a higher neutron dose rate contribution, however, these high burnup state points may produce higher dose rates at certain storage or transfer cask locations. The high burnup cases are considered in the determination of maximum dose rates at each detector location, as discussed in Section 5.1.3.

Typical fuel source parameters are chosen to yield representative dose rates suitable for operational dose estimates and sample ISFSI site dose estimates. Rather than selecting the minimum allowed fuel cooling time from the FuelSolutions™ canister fuel cooling tables (~4 years for 36 GWd/MTU, 3.5% enriched fuel), 10 years is selected because of the large amount of fuel older than 10 years in U.S. fuel pools available for loading on the perimeter of the canister.

The forward shielding calculations are performed using the gamma and neutron source strengths described in Sections 5.2.2.2 and 5.2.2.3. These source strengths correspond to the bounding and

typical fuel parameters described above. The shielding calculations are based upon the FuelSolutions™ W21 canister configuration. As described in Section 5.1.3, however, the dose rate results are adjusted (increased) by various factors so that they are bounding for different FuelSolutions™ canister types and fuel payloads.

5.2.2.2 Gamma Source Terms for Forward Cases

Primary gamma sources from SNF include irradiated UO_2 and activated components of the fuel assemblies and non-fuel hardware. These are accounted for separately in the shielding calculations, as summarized in Table 5.2-3.

5.2.2.2.1 Assembly Fuel Zone Gamma Sources

UO_2 gamma sources are obtained from the generic library described in Section 5.2.2. Since the energy structure of the generic decay library (developed using ORIGEN-2.1) is different from the BUGLE93 energy structure used for adjoint and forward transport calculations, transfer functions are necessary to map gamma sources from one structure to the other. The transfer functions are constructed using logarithmic interpolation and conservation of energy. They are shown in Table 5.2-4. The transfer functions are used in ADSORB (to calculate dose rates during the construction of the fuel cooling tables), and in forward shielding calculations (to convert generic source term library data to the BUGLE93 format).

The generic library is based on one metric ton of UO_2 only and does not include contributions from activated non-UO_2 hardware in the active fuel zone. In order to account for these gamma sources, 1.08% of the total actinide plus fission source is treated as ^{60}Co and added to BUGLE-93 group 57 (1.00 MeV-1.50 MeV) [6] for the bounding case. For the typical case, 1.18% of the total fuel source is added. These assembly hardware source strength percentages vary with burnup, enrichment, cooling time, and the quantity of cobalt in the assembly core region. The above percentages are based upon 36 GWd/MTU, 4.5% enriched, 4-year cooled PWR fuel (for the bounding case) and 36 GWd/MTU, 3.5% enriched, 10-year cooled PWR fuel (for the typical case). The percentages are based upon PWR fuel assemblies with a core region cobalt quantity of 11 grams/assembly. Additional discussion of the assembly hardware gamma source strength percentage calculations is presented in Section 5.5.3 of this FSAR. The text near the end of Section 5.5.3 specifically discusses the calculation of the 1.08% and 1.18% assembly hardware source strength percentage values that are used in the bounding and typical case forward shielding analyses, respectively. As discussed in Section 5.5.3, the calculation methodology treats the presence of control components within the assembly.

The fuel gamma source strengths are based upon an upper bound PWR assembly uranium loading of 0.471 MTU/assembly. The active fuel region total gamma source terms for bounding and typical fuels are 1.845E+17 and 8.386E+16 gammas/canister-s, respectively (including the additional gamma source strengths from assembly hardware activation).

The final fuel region gamma source strengths, for the bounding and typical cases, are tabulated by energy group in Table 5.2-5 and Table 5.2-6, respectively. The 1.0-1.5 MeV energy group source strengths shown in the tables is increased to include the effects of fuel assembly hardware

[6] DOE/RW-0184-R3, *Characteristics of Potential Repository Wastes*, Oak Ridge National Laboratory, Oak Ridge, Tennessee, December 1987.

activation, as discussed above. The portion of the 1.0-1.5 MeV gamma source strength that is due to hardware activation is noted in the tables.

The source strengths presented in Table 5.2-5 and Table 5.2-6 correspond to the assembly average burnup level of 36 GWD/MTU (for both cases). The gamma source strengths vary with axial position, however, due to the axial burnup profile of the fuel. This axial gamma source strength profile is rigorously modeled in the forward shielding calculations. The (normalized) axial gamma source strength distribution is shown (for both the bounding and typical cases) in Table 5.2-12. The gamma source strength at a given axial location is equal to the assembly average source strengths presented in Table 5.2-5 and Table 5.2-6 times the relative burnup values shown for that axial location in Table 5.2-12. Since the gamma source strength varies proportionally with burnup, the relative gamma source strength at a given axial location is equal to the relative burnup level at that location.

5.2.2.2.2 Assembly Non-Fuel Zone Gamma Sources

The assembly bottom nozzles, gas plena, and top nozzles are modeled as discrete axial source regions in all forward shielding cases. For each of these three non-fuel assembly regions, the maximum ^{60}Co activity level for any allowable fuel payload is assumed.

A detailed survey of the current PWR fuel assembly inventory[6] was performed to determine bounding cobalt quantities for each of the three assembly non-fuel regions (including the presence of control components). The results showed that the B&W 15x15 Mark B assembly with a B&W 15x15 thimble plug assembly (TPA) inserted yields the maximum total cobalt quantity for each of the three regions (with the exception of the B&W 17x17 Mark C assembly, as discussed later in this section). These bounding cobalt quantities are used to determine the bounding assembly non-fuel region ^{60}Co activity levels (and gamma source strengths).

The ORIGEN-2.1 code is used to determine the curies of ^{60}Co generated (per gram of cobalt initially present) in the PWR assembly core region. The core region cobalt activation level is multiplied by published scaling factors[5] to yield cobalt activation levels for the three non-fuel assembly regions. The cobalt activation level for the bottom nozzle and gas plenum regions are 20% of the core region values, and the top nozzle region cobalt activation level is 10% of the core region value. The cobalt activation values (in Ci of ^{60}Co per gram of cobalt initially present) are multiplied by the bounding cobalt quantities for each assembly non-fuel region to yield total ^{60}Co activity levels for each region.

The core region cobalt activation level (and therefore the assembly non-fuel region ^{60}Co activity levels) vary as a function of burnup, enrichment, and cooling time. The FuelSolutions™ canister cooling tables (included in the FuelSolutions™ Canister Storage FSARs) provide acceptable cooling times for every combination of burnup and enrichment. Thus, the cooling table presents all combinations of PWR assembly burnup, enrichment, and cooling time that may be loaded into the canister. The ORIGEN-2.1 code is used to determine the core region cobalt activation level as a function of burnup and enrichment (as discussed in Section 5.5.3 of this FSAR). These cobalt activation levels are then decayed (assuming a 5.27-year ^{60}Co half-life) to the cooling times shown in the cooling tables for each burnup enrichment combination. Thus, cobalt activation levels can be determined for every state point in the cooling table. The resulting cobalt activation levels are surveyed to find the maximum core region cobalt activation level that

occurs for any allowable set of fuel parameters. This core region cobalt activation level is then used to calculate the ^{60}Co activity levels for the assembly non-fuel region.

Thus, in summary, the assembly non-fuel region ^{60}Co activity levels assumed in the forward shielding calculations are based upon the maximum cobalt quantity for each of the assembly non-fuel regions, and upon the maximum level of cobalt activation (Ci of ^{60}Co per gram of cobalt) for any allowable FuelSolutions™ canister fuel payload. Therefore, the ^{60}Co activity levels assumed for each assembly non-fuel regions are the maximum possible values that could occur for any possible W21 canister payload.

The typical case assembly non-fuel regions are based upon the core region cobalt activation level that occurs for 36 GWd/MTU, 3.5% enriched, 10-year cooled PWR fuel.

The bounding case storage cask forward analysis assumes higher assembly top nozzle and gas plenum source strengths than does the transfer cask analysis. The CE 16x16 PWR assembly top nozzle region has an initial cobalt quantity that is almost double that of the B&W 15x15 Mark B assembly. However, due to the long length of the CE 16x16 assembly top nozzle, its distance from the reactor core during operation, and its large amount of metal mass (which provides neutron self-shielding), the level of cobalt activation in the CE assembly top nozzles is half that of other PWR assemblies.[5] For this reason, the B&W 15x15 Mark B assembly top nozzle actually has the highest ^{60}Co activity level. The top nozzle region activity level assumed in the transfer cask bounding case forward shielding analyses correspond to that of the B&W 15x15 Mark B assembly (with inserted TPA). The storage cask analyses, however, conservatively applied the B&W 15x15 Mark B assembly top nozzle region cobalt activation level to the CE 16x16 assembly top nozzle region cobalt quantity. Thus, an activation level that is almost a factor of two higher than the actual maximum possible value is conservatively assumed.

With respect to the gas plenum region, the storage cask bounding case shielding analyses assume a cobalt quantity that corresponds to the B&W 17x17 Mark C assembly, whereas the transfer cask analyses are based upon the B&W 15x15 Mark B assembly. The B&W 17x17 Mark C assembly has a somewhat higher cobalt quantity than does the B&W 15x15 Mark B assembly (which is otherwise the bounding PWR assembly). However, there are only four B&W 17x17 Mark C assemblies in existence, and the cooling times of these four assemblies are known to be much longer than those shown in the W21 cooling tables. These assemblies are no longer being produced. Therefore, the existing B&W 17x17 Mark C assemblies have plenum region ^{60}Co activity levels that are bounded by the (B&W 15x15 Mark B) values assumed in the transfer cask shielding analyses. Therefore, the plenum source strengths assumed in the transfer cask shielding analyses remain the maximum possible values that may occur within the FuelSolutions™ W21 canister.

For the typical case, the transfer cask non-fuel region gamma source strengths are based upon the non-fuel region cobalt quantities of the W 17x17 Std. assembly (the most common assembly). The storage cask typical case shielding analyses conservatively base the non-fuel region gamma source strengths on the (bounding) B&W 15x15 assembly cobalt quantities.

The activity of inserted control component heads is treated in a very conservative fashion by the shielding analyses. In reality, some fraction of the control component head extends above the top nozzle region of the assembly. In this region, the level of cobalt activation would be lower than it is in the assembly top nozzle region, due to the greater distance from the reactor core, and the

shielding of the top nozzle region material. However, since it is not clear what fraction of the control component head material lies above the assembly top nozzle region, it is conservatively assumed that all the material lies within the top nozzle region. Furthermore, as discussed in Section 5.3.2.2 and 5.3.3 of this FSAR, no credit is taken for the shielding properties of the control component head material. The conservative assumptions concerning the control component heads discussed above more than make up for the fact that some of the control component head mass lies closer to the canister cavity top than the assembly top nozzle region (especially in the transfer cask model).

The gamma source strength assumed in the forward shielding calculations for each of the three non-fuel assembly regions is presented in Table 5.2-7. The gamma source strength from inserted control components is presented separately for the top nozzle and gas plenum regions (for the transfer cask case). As discussed in this section, the storage cask analyses model the CE 16x16 assembly gas plenum and top nozzle regions. For this assembly, control components do not contribute to the top nozzle and gas plenum source strengths. Control components do not extend into the bottom nozzle region of the assembly.

5.2.2.3 Neutron Source Terms for Forward Cases

Neutron sources in SNF include spontaneous fission of actinides, (alpha, n) reactions, and subcritical multiplication. All significant neutron production comes from the active fuel region of the spent fuel assemblies. Spontaneous fission and (alpha, n) sources, per MTIHM of fuel, are extracted from the generic decay library (ORIGEN-2.1). These per MHITM source strengths are multiplied by the design basis (upper bound) PWR assembly uranium loading of 0.471 MTU/assembly, and by the FuelSolutions™ W21 canister payload of 21 assemblies to yield the per-canister neutron source strengths assumed in the forward shielding calculations. These neutron source strengths are adjusted as described below before being used in the calculations.

Subcritical multiplication is assumed to be regulatory limit of k_{eff}=0.95 for wet conditions (i.e., for cases when the canister is flooded during fuel loading or unloading operations), and 0.37 for dry conditions (i.e., during dry storage and canister transfer operations). These conditions are used for all canisters unless noted otherwise in Chapter 5 of the FuelSolutions™ Canister Storage FSAR. The effects of subcritical multiplication increase the neutron source terms by factors of 20 and 1.587 for wet and dry conditions, respectively. The factor is calculated using the following equation where M equals the neutron source multiplication factor, and k_{eff} is the neutron multiplication factor:

$$M = 1/(1-k_{eff})$$

Scoping studies showed that, despite the large factor for subcritical neutron multiplication for wet cases, the presence of water in the canister cavity and cask-canister annulus more than compensated for the increased neutron sources, and neutron dose rates are insignificant compared to gammas. For simplicity, all subsequent cases are run using the same dry canister source term.

For some combinations of burnup and enrichment, the ORIGEN-2.1 code may predict neutron source strengths that are less than those predicted by other depletion codes such as SAS2H.[7] For this reason, both the bounding and typical neutron source strengths are conservatively increased by a factor of two to cover any differences in code predictions.

The total neutron source strength also increases due to the presence of the axial burnup profile in the fuel. The (per MTIHM of fuel) neutron source strengths taken from the generic decay library are based upon the assembly average burnup level of 36 GWd/MTU. Because the neutron source strength is a strong non-linear function of the burnup level (i.e., burnup to the 4th power), the axial burnup profile causes the total (assembly average) neutron source strength to increase above the neutron source strength that occurs for fuel at the assembly average burnup level. This does not occur for the gamma source strength, due to its linear dependence on burnup. At each axial location, the neutron source strength would equal the 36 GWd/MTU source strength times the relative burnup level (at that axial location) raised to the 4th power. If one then integrates over the axial length of the fuel to find the total neutron source strength, the resulting total is 18% higher than the neutron source strength that corresponds to the assembly average burnup level (i.e., what the source strength would be if there were no axial burnup profile). This increase factor is profile dependent, and the value given applies to the burnup profile that exists for 36 GWd/MTU PWR fuel. Thus, the total neutron source strength is adjusted upwards 18% to account for the effects of the axial burnup profile in the fuel.

In summary, the raw total neutron source strengths are increased by an overall factor of 3.746 for to account for sub-critical neutron multiplication (a factor of 1.587 effect), to account for possible differences in code predictions of neutron source (a factor of 2.0 correction), and to account for axial burnup profile effects (a factor of 1.18 effect).

The unadjusted neutron source strengths are 1.305×10^9 and 2.480×10^9 neutrons/canister-s for the bounding and typical cases, respectively. Adjusting these source strength upwards by a factor of 3.746 yields the final total neutron source strengths of 4.889×10^9 and 9.289×10^9 neutrons/canister-s for the bounding and typical cases, respectively.

Since ORIGEN-2.1 does not calculate neutron energy spectra, the neutron energy spectrum of the most significant contributor is assumed to apply to all neutrons generated by the SNF. Spontaneous fission in ^{244}Cm and subcritical multiplication (for flooded cases) are the predominate source of neutrons in SNF and their energy distribution is represented by a Watt spectrum with the following form.[8]

$$f(E) = C \cdot e^{-E/0.906)} \cdot \sinh\left(\sqrt{3.848 \cdot E}\right)$$

This spectrum is integrated over each BUGLE-93 neutron energy group interval to yield a set of energy group fractions (the fraction of the total neutron source that lies in each defined energy group). This set of group fractions is tabulated in Table 5.2-9 and plotted in Figure 5.2-2. This

[7] NUREG/CR-0200, Volume 1, Section 2, Rev. 6, *SAS2H: A Coupled 1-Dimensional Depletion and Shielding Analysis Module*, Oak Ridge National Laboratory, September 1998. (Part of the SCALE-4.4 Code Package, RSICC - CCC-545).

[8] *MCNP4B: Monte Carlo N-Particle Transport Code System*, RSICC Code Package CCC-660, Radiation Shielding Information Code Center, Oak Ridge, Tennessee.

set neutron energy group fractions is used for all shielding transport calculations, and for the construction of fuel cooling tables using ADSORB. This spectrum is an adequate representation of the neutron spectrum for spent fuel for cooling times of 3 years or more. All spent fuel to be loaded into the FuelSolutions™ cask system is required to have a cooling time of at least 3 years.

The total neutron source strengths shown above for the bounding and typical cases are multiplied by the normalized energy spectrum shown in Table 5.2-9 to yield energy-dependent total neutron source strengths. These final neutron source strengths, that are assumed in the forward shielding analyses, are presented in Table 5.2-11and Table 5.2-10, respectively.

As with the gammas, the forward shielding analyses rigorously model the axial neutron source strength distribution. The normalized axial neutron source distribution assumed for the bounding and typical forward shielding calculations (based upon 36 GWd/MTU PWR fuel) is shown in Table 5.2-12. The neutron source strength at any given axial location is equal to the neutron source strength shown in Table 5.2-10 and Table 5.2-11 (for the bounding and typical case, respectively) times the relative neutron source strength shown for that axial location in Table 5.2-12.

Note that the relative neutron source strengths shown in Table 5.2-12 are not equal to the relative burnup levels raised to the 4th power. This is because the burnup profile actually causes an increase in the total neutron source strength (as discussed earlier in this section), and the profile shown in Table 5.2-12 is a normalized source strength profile. If the relative neutron source strengths shown in Table 5.2-12 were equal to the relative burnup level raised to the 4th power, the profile would integrate out to a value of 1.18, as opposed to 1.0. Thus, the values shown in the normalized profile, at every axial location, are a factor of 1.18 less than the relative burnup level at that location raised to the 4th power.

The neutron source term calculation process is summarized in Table 5.2-8.

The bounding case neutron source strengths shown in Table 5.2-10 are actually lower than the typical case neutron source strengths shown in Table 5.2-11. The bounding case selected for the forward shielding calculations (36 GWd/MTU, 4.5% enriched, 4-year cooled PWR fuel) yields a lower neutron source strength than the typical (36 GWd/MTU, 3.5% enriched, 10-year cooled PWR fuel) case. The bounding (W21 canister) case is selected because it yields maximum gamma source strengths, and therefore produces maximum storage cask surface dose rates in most locations. Dose rates on the surface of the storage cask are mostly due to gammas. As discussed in Section 5.1.3, the calculated gamma and neutron dose rates for all storage and transfer cask locations are adjusted to correspond to different canister types or fuel payloads, if these conditions yield higher total dose rates for the location in question. Therefore, the bounding total dose rates presented for the storage and transfer casks in Table 5.1-1 and Table 5.1-2 are bounding for all canister types and allowable fuel payloads. These bounding total dose rates will always be higher than those produced by the typical case.

5.2.2.3.1 Source Terms for Adjoint Cases

Source terms for the FuelSolutions™ adjoint cases are the flux-to-dose conversion factors, times a normalization factor. The flux-to-dose conversion factors are the same as those used for converting fluxes from forward shielding calculations, as described in Section 5.5.1. The normalization factors are equal to the sum of the gamma or neutron flux-to-dose factors and are

7.008e-05 and 3.403e-03 for photons and neutrons, respectively. It should be noted that, for the adjoint application, the source is input to DORT according to ascending energy. Therefore, in this case, groups 1 and 20 represent the lowest and highest gamma ray energy groups in the BUGLE93 library, respectively. Group 21 is the lowest energy neutron group and group 67 represents the highest energy neutron group.

5.2.2.4 Thermal Source Term Calculations

The thermal source terms used in the cooling table calculations are taken from the same generic decay libraries that the gamma and neutron source strength data is taken from. These decay libraries were generated using the ORIGEN-2.1 code and the assumptions given in Table 5.2-1and Table 5.2-2, as discussed in Section 5.2.2.

Fuel heat generation rates per MTIHM of fuel are taken from the decay library. These per MTIHM heat generation rates are multiplied by the design basis (upper bound) PWR and BWR (i.e., BRP) fuel uranium loadings of 0.471 MTU/assembly and 0.1421 MTU/assembly, respectively, and by the corresponding W21 and W74 canister capacities (in assemblies/canister) to yield total canister heat generation rates.

The heat generation rates calculated as discussed above do not include heat generation from activated assembly hardware. As discussed in Section 5.2.1.3, heat generation from assembly hardware is treated by reducing the allowable assembly heat generation level that is entered into the ADSORB code. The allowable heat generation level entered into the code corresponds to the heat generation level from the fuel (only) for an assembly whose total heat generation level (including hardware generation) would meet the thermal limitations of the canister in question. This fuel only heat generation level is entered into the ADSORB code because ADSORB only calculates the heat generation level from the fuel as a function of burnup, enrichment, and cooling time (using the ORIGEN-2.1 code).

The ADSORB code then determines the cooling time at which the assemblies meet the maximum fuel-only heat generation requirement, for each burnup/enrichment combination listed in the cooling tables. If a longer cooling time is required to meet the radiological requirements, however, then that longer cooling time is listed in the cooling tables.

The burnup-dependent factors that specify what percentage of the assembly heat generation level comes from assembly hardware are shown in each FuelSolutions™ Canister Storage FSAR.

Table 5.2-1 - PWR Source Term Calculation Input Parameters

Parameter	Assumed Value/Rationale
Assembly Thermal Power	40.223 MWt/assembly
Fuel Assembly Type	Vantage Plus Hybrid - Performance Plus (W 17x17 Std.)
Assembly Rod Pitch	0.496 in.
Fuel Rod O.D.	0.374 in.
Clad Thickness	0.0225 in.
Fuel Pellet O.D.	0.3225 in.
Fuel Pellet Density	95% UO_2 Theoretical
Discharge Burnup	Range of Values Assumed(1)
Uranium Enrichment (Active Fuel)	Range of Values Assumed(1)
Fuel Loading Pattern(2)	Three-Region Equilibrium Cycle
Downtime Between Cycles(2)	None
Moderator Boron Concentration	1200 ppm (BOC) to 100 ppm (EOC)(3)
Operating Fuel Temperature	1000 K
ORIGEN Decay Library	pwrus.lib (≤ 40,000 MWd/MTU) pwrue.lib (> 40,000 MWd/MTU)

Notes:

(1) Ranges for burnup and initial enrichment are varied to cover the ranges in the fuel cooling tables.

(2) The ORIGEN-2.1 decay libraries are generated assuming a three-cycle power history. The ORIGEN-2.1 calculations, however, are conservatively performed based upon a single burn period with no downtimes.

(3) Boron concentration is varied during the irradiation cycle so that $k_{eff} \sim 1.0$.

Table 5.2-2 - BWR Source Term Calculation Input Parameters

Parameter	Assumed Value/Rationale
Assembly Thermal Power	23.51 MWt/assembly
Fuel Assembly Type	UO_2 8x8 in Zircaloy-4 Channels with Two Water Rods (GE-5 8x8 assembly)
Assembly Rod Pitch	0.64 in.
Fuel Rod O.D.	0.483 in.
Clad Thickness	0.032 in.
Fuel Pellet O.D.	0.410 in.
Fuel Pellet Density	95% UO_2 theoretical
Equilibrium cycle length	Range of Values Assumed(1)
Uranium Enrichment (Active Fuel)	Range of Values Assumed(1)
Fuel Loading Pattern(2)	Four-Region Equilibrium Cycle
Downtime Between Cycles(2)	None
Operating Fuel Temperature	1000 K
ORIGEN Decay Library	bwrus.lib (≤ 34,000 MWd/MTU) bwrue.lib (> 34,000 MWd/MTU)

Notes:

(1) Ranges for burnup and initial enrichment are varied to cover the ranges in the canister fuel cooling tables.

(2) The ORIGEN-2.1 decay libraries are generated assuming a three-cycle power history. The ORIGEN-2.1 calculations, however, are conservatively performed based upon a single burn period with no downtimes.

Table 5.2-3 - Summary of Gamma Sources

Gamma Source	Radiation Type and Calculation Purpose			
	Primary Gamma		Secondary Gamma	
	Derive Fuel Cooling Tables (Adjoint Models and ADSORB)	Calculate Dose Rates (Forward DORT, MCNP)	Derive Fuel Cooling Tables (Adjoint Models and ADSORB)	Calculate Dose Rates (Forward DORT, MCNP)
UO_2	Generic decay library * γ peaking factor	Generic decay library * axial γ profile built into models	Adjoint model * neutron peaking factor	Forward model with axial neutron profile (coupled cross sections)
Activated clad, grids, etc.	Generic decay library * factor	Generic decay library * factor * axial γ profile built into models	Adjoint model * neutron peaking factor	Forward model with axial neutron profile (coupled cross sections)
Plena clad, rod end caps, etc.	Not significant	Separate axial source region in models	Adjoint model * neutron peaking factor	Forward model with axial neutron profile (coupled cross sections)
End fitting hardware	Not significant	Separate axial source region in models	Adjoint model * neutron peaking factor	Forward model with axial neutron profile (coupled cross sections)

Table 5.2-4 - Gamma Energy Group Transfer Function

ORIGEN2.1		BUGLE93		ORIGEN2.1 → BUGLE93 Transfer Function
Group	Upper E, MeV	Group	Upper E, MeV	
18	11.000	48	14.00	0
17	8.000	49	10.00	**Group18**
16	6.000	50	8.00	0.464163*__Group17__
15	4.000	51	7.00	0.535837*__Group17__
14	3.000	52	6.00	0.44966*__Group16__
13	2.500	53	5.00	0.55034*__Group16__
12	2.000	54	4.00	**Group15**
11	1.500	55	3.00	**Group14**+**Group13**
10	1.000	56	2.00	**Group12**
9	0.700	57	1.50	**Group11**
8	0.450	58	1.00	0.625622*__Group10__
7	0.300	59	0.80	0.374378*__Group10__
6	0.150	60	0.70	0.348889*__Group9__
5	0.100	61	0.60	0.651111*__Group9__+0.290489*__Group8__
4	0.070	62	0.40	0.709511*__Group8__+0.584963*__Group7__
3	0.045	63	0.20	0.415037*__Group7__+__Group6__
2	0.030	64	0.10	**Group5**+0.348889*__Group4__
1	0.020	65	0.06	0.651111*__Group4__+__Group3__
		66	0.03	**Group2**
		67	0.02	**Group1**

Table 5.2-5 - Bounding Case Fuel Region Gamma Source Description for Forward Shielding Calculations

BUGLE-93 Group	Upper Energy (MeV)	Lower Energy (MeV)	Average Energy (MeV)	Gamma Source Strength (γ/can-s)
48	14.00	10.00	12.00	0.000E+00
49	10.00	8.00	9.00	7.377E+05
50	8.00	7.00	7.50	2.981E+06
51	7.00	6.00	6.50	3.441E+06
52	6.00	5.00	5.50	2.505E+07
53	5.00	4.00	4.50	3.066E+07
54	4.00	3.00	3.50	3.188E+11
55	3.00	2.00	2.50	1.315E+14
56	2.00	1.50	1.75	1.103E+14
57	1.50	1.00	1.25	4.525E+15[1]
58	1.00	0.80	0.90	9.512E+15
59	0.80	0.70	0.75	5.691E+15
60	0.70	0.60	0.65	2.181E+16
61	0.60	0.40	0.50	4.160E+16
62	0.40	0.20	0.30	5.394E+15
63	0.20	0.10	0.15	8.816E+15
64	0.10	0.06	0.08	9.762E+15
65	0.06	0.03	0.05	1.786E+16
66	0.03	0.02	0.03	1.116E+16
67	0.02	0.01	0.02	4.816E+16
Total				1.845E+17

Note:

(1) An additional gamma source strength, equal to 1.08% of the total gamma source strength, has been added to the gamma source strength of this energy group to account for fuel zone assembly hardware activation.

Table 5.2-6 - Typical Case Fuel Region Gamma Source Description for Forward Shielding Calculations

BUGLE-93 Group	Upper Energy (MeV)	Lower Energy (MeV)	Average Energy (MeV)	Gamma Source Strength (γ/can-s)
48	14.00	10.00	12.00	0.000E+00
49	10.00	8.00	9.00	1.407E+06
50	8.00	7.00	7.50	5.688E+06
51	7.00	6.00	6.50	6.567E+06
52	6.00	5.00	5.50	4.781E+07
53	5.00	4.00	4.50	5.852E+07
54	4.00	3.00	3.50	6.734E+09
55	3.00	2.00	2.50	9.077E+11
56	2.00	1.50	1.75	3.108E+13
57	1.50	1.00	1.25	2.055E+15[1]
58	1.00	0.80	0.90	1.896E+15
59	0.80	0.70	0.75	1.135E+15
60	0.70	0.60	0.65	1.257E+16
61	0.60	0.40	0.50	2.375E+16
62	0.40	0.20	0.30	1.885E+15
63	0.20	0.10	0.15	3.082E+15
64	0.10	0.06	0.08	3.911E+15
65	0.06	0.03	0.05	8.072E+15
66	0.03	0.02	0.03	4.505E+15
67	0.02	0.01	0.02	2.096E+16
Total				8.386E+16

Note:

(1) An additional gamma source strength, equal to 1.08% of the total gamma source strength, has been added to the gamma source strength of this energy group to account for fuel zone assembly hardware activation.

Table 5.2-7 - Assembly Non-Fuel Region Gamma Source Strengths

Assembly Hardware Component	Gamma Source Strength (gammas/sec-canister)	
	Bounding Case	Typical Case
Top Nozzle Assembly Hardware (transfer cask case)	3.574×10^{14}	7.211×10^{13}
Top Nozzle Region Control Comp. Hardware (transfer-cask case)	5.517×10^{13}	-
Total Top Nozzle Region Hardware (transfer cask case)	4.126×10^{14}	7.211×10^{13}
Total Top Nozzle Region Hardware (storage cask case)	7.579×10^{14}	2.878×10^{14}
Gas Plenum Assembly Hardware (transfer cask case)	1.895×10^{14}	5.734×10^{13}
Gas Plenum Region Control Comp. Hardware (transfer-cask case)	1.027×10^{14}	-
Total Gas Plenum Region Hardware (transfer cask case)	2.922×10^{14}	5.734×10^{13}
Total Gas Plenum Region Hardware (storage cask case)	3.304×10^{14}	1.254×10^{14}
Bottom Nozzle Assembly Hardware (transfer cask case)	4.835×10^{14}	6.791×10^{13}
Bottom Nozzle Assembly Hardware (storage cask case)	4.835×10^{14}	1.837×10^{14}

Table 5.2-8 - Summary of Neutron Sources

Neutron Source	Purpose	
	Derive Fuel Cooling Tables (Adjoint Models and ADSORB)	**Calculate Dose Rates (Forward DORT, MCNP)**
Spontaneous fission and (α,n)	Generic decay library * neutron peaking factor	Generic decay library * axial neutron profile built into models * code comparison factor
Subcritical multiplication	Generic decay library * subcritical multiplication factor	Generic decay library * factor * axial neutron profile built into models * code comparison factor

Table 5.2-9 - Neutron Spectra

Group	Upper E, MeV	Group Fraction	Group	Upper E, MeV	Group Fraction
1	1.733E+01	3.897E-05	25	2.972E-01	2.716E-02
2	1.419E+01	1.798E-04	26	1.832E-01	1.407E-02
3	1.221E+01	1.149E-03	27	1.111E-01	6.833E-03
4	1.000E+01	2.805E-03	28	6.738E-02	3.282E-03
5	8.607E+00	6.455E-03	29	4.087E-02	9.268E-04
6	7.408E+00	1.865E-02	30	3.183E-02	5.299E-04
7	6.065E+00	3.564E-02	31	2.606E-02	1.613E-04
8	4.966E+00	9.194E-02	32	2.418E-02	1.890E-04
9	3.679E+00	8.411E-02	33	2.188E-02	5.036E-04
10	3.012E+00	4.671E-02	34	1.503E-02	4.519E-04
11	2.725E+00	4.854E-02	35	7.102E-03	1.471E-04
12	2.466E+00	2.055E-02	36	3.355E-03	4.782E-05
13	2.365E+00	4.113E-03	37	1.585E-03	1.948E-05
14	2.346E+00	2.475E-02	38	4.540E-04	2.383E-06
15	2.231E+00	7.378E-02	39	2.144E-04	7.738E-07
16	1.921E+00	7.109E-02	40	1.013E-04	2.890E-07
17	1.653E+00	8.733E-02	41	3.727E-05	7.028E-08
18	1.353E+00	1.103E-01	42	1.068E-05	8.597E-09
19	1.003E+00	5.884E-02	43	5.043E-06	3.211E-09
20	8.209E-01	2.523E-02	44	1.855E-06	6.228E-10
21	7.427E-01	4.287E-02	45	8.764E-07	2.022E-10
22	6.081E-01	3.395E-02	46	4.140E-07	8.566E-11
23	4.979E-01	3.746E-02	47	1.000E-07	1.153E-11
24	3.688E-01	1.921E-02			

Table 5.2-10 - Bounding Case Fuel Region Neutron Source Description for Forward Shielding Calculations

Group	Upper E, MeV	Neutron Source (n/can-s)	Group	Upper E, MeV	Neutron Source (n/can-s)
1	1.733E+01	1.905E+05	25	2.972E-01	1.328E+08
2	1.419E+01	8.789E+05	26	1.832E-01	6.878E+07
3	1.221E+01	5.617E+06	27	1.111E-01	3.340E+07
4	1.000E+01	1.371E+07	28	6.738E-02	1.604E+07
5	8.607E+00	3.155E+07	29	4.087E-02	4.531E+06
6	7.408E+00	9.117E+07	30	3.183E-02	2.590E+06
7	6.065E+00	1.742E+08	31	2.606E-02	7.885E+05
8	4.966E+00	4.494E+08	32	2.418E-02	9.239E+05
9	3.679E+00	4.112E+08	33	2.188E-02	2.462E+06
10	3.012E+00	2.283E+08	34	1.503E-02	2.209E+06
11	2.725E+00	2.373E+08	35	7.102E-03	7.191E+05
12	2.466E+00	1.005E+08	36	3.355E-03	2.338E+05
13	2.365E+00	2.011E+07	37	1.585E-03	9.523E+04
14	2.346E+00	1.210E+08	38	4.540E-04	1.165E+04
15	2.231E+00	3.607E+08	39	2.144E-04	3.783E+03
16	1.921E+00	3.475E+08	40	1.013E-04	1.413E+03
17	1.653E+00	4.269E+08	41	3.727E-05	3.436E+02
18	1.353E+00	5.392E+08	42	1.068E-05	4.203E+01
19	1.003E+00	2.876E+08	43	5.043E-06	1.570E+01
20	8.209E-01	1.233E+08	44	1.855E-06	3.045E+00
21	7.427E-01	2.096E+08	45	8.764E-07	9.884E-01
22	6.081E-01	1.660E+08	46	4.140E-07	4.187E-01
23	4.979E-01	1.831E+08	47	1.000E-07	5.636E-02
24	3.688E-01	9.391E+08	Total		4.889E+09

Table 5.2-11 - Typical Case Fuel Region Neutron Source Description for Forward Shielding Calculations

Group	Upper E, MeV	Neutron Source (n/can-s)	Group	Upper E, MeV	Neutron Source (n/can-s)
1	1.733E+01	3.602E+05	25	2.972E-01	2.523E+08
2	1.419E+01	1.670E+06	26	1.832E-01	1.307E+08
3	1.221E+01	1.067E+07	27	1.111E-01	6.347E+07
4	1.000E+01	2.606E+07	28	6.738E-02	3.049E+07
5	8.607E+00	5.996E+07	29	4.087E-02	8.609E+06
6	7.408E+00	1.732E+08	30	3.183E-02	4.922E+06
7	6.065E+00	3.311E+08	31	2.606E-02	1.498E+06
8	4.966E+00	8.540E+08	32	2.418E-02	1.756E+06
9	3.679E+00	7.813E+08	33	2.188E-02	4.678E+06
10	3.012E+00	4.339E+08	34	1.503E-02	4.198E+06
11	2.725E+00	4.509E+08	35	7.102E-03	1.366E+06
12	2.466E+00	1.909E+08	36	3.355E-03	4.442E+05
13	2.365E+00	3.821E+08	37	1.585E-03	1.809E+05
14	2.346E+00	2.299E+08	38	4.540E-04	2.214E+04
15	2.231E+00	6.853E+08	39	2.144E-04	7.188E+03
16	1.921E+00	6.604E+08	40	1.013E-04	2.685E+03
17	1.653E+00	8.112E+08	41	3.727E-05	6.528E+02
18	1.353E+00	1.025E+09	42	1.068E-05	7.986E+01
19	1.003E+00	5.466E+08	43	5.043E-06	2.983E+01
20	8.209E-01	2.344E+08	44	1.855E-06	5.785E+00
21	7.427E-01	3.982E+08	45	8.764E-07	1.878E+00
22	6.081E-01	3.154E+08	46	4.140E-07	7.957E-01
23	4.979E-01	3.480E+08	47	1.000E-07	1.071E-01
24	3.688E-01	1.784E+08	Total		9.289E+09

Table 5.2-12 - Normalized Axial Gamma and Neutron Source Strength Profiles Used in Forward Shielding Analyses

Percent Fuel Height[1]	Relative γ Source Strength.	Relative n Source Strength.
2.78	0.585	0.099
8.33	0.957	0.710
13.89	1.091	1.199
19.44	1.121	1.337
25.00	1.126	1.361
30.56	1.111	1.290
36.11	1.094	1.213
41.67	1.093	1.208
47.22	1.092	1.204
52.78	1.091	1.199
58.33	1.092	1.204
63.89	1.099	1.235
69.44	1.096	1.221
75.00	1.087	1.182
80.56	1.073	1.122
86.11	1.003	0.857
91.67	0.796	0.340
97.22	0.393	0.020

Note:

(1) Axial distribution is referenced to the bottom of the active fuel.

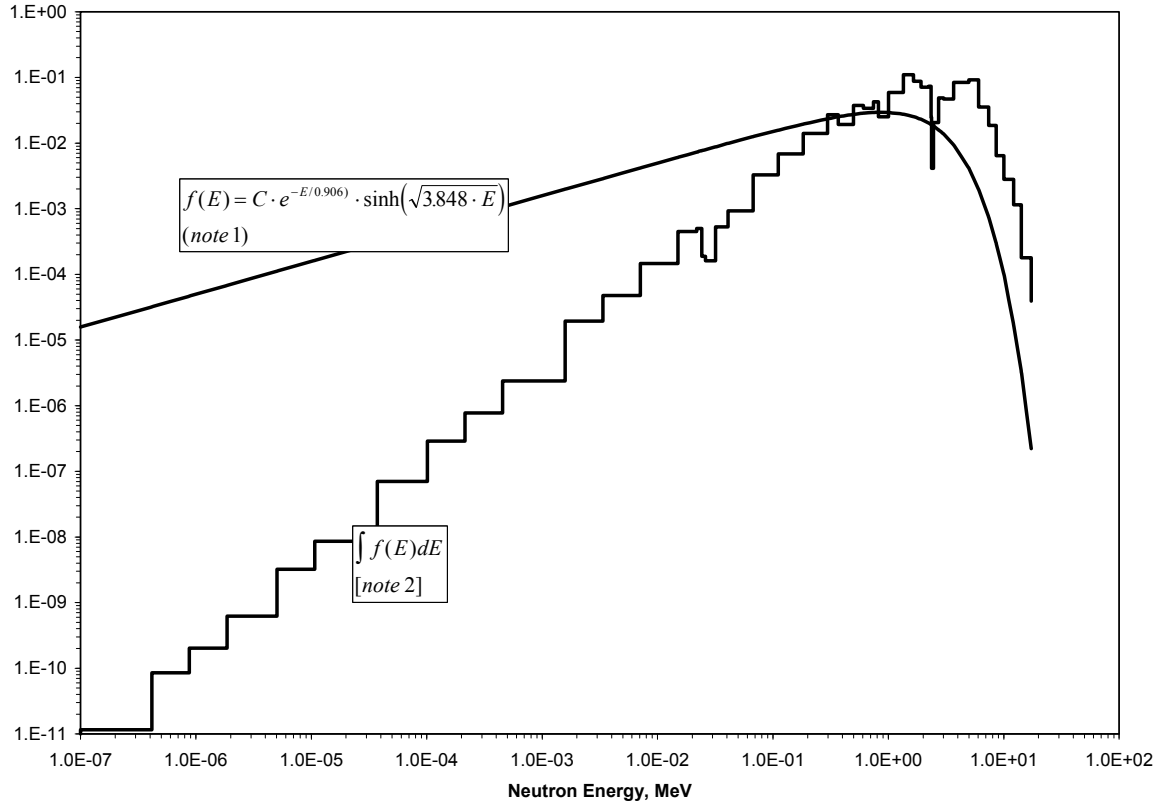

Notes:

(1) A continuous energy Watt spectrum is the basis for the neutron source energy distribution. Units are MeV^{-1}.

(2) The integral of Watt spectrum over the discrete BUGLE energy groups is used as the basis for DORT input. Units are dimensionless. Integrated values are dependent on the Watt function and the width of the BUGLE energy group, and therefore the two curves appear skewed.

(3) The same neutron source distribution is used for all cases.

Figure 5.2-2 - Neutron Energy Spectrum for Transfer and Storage Cask Models

5.3 Model Specification

5.3.1 Description of the Radial and Axial Shielding Configurations

Shielding models for the FuelSolutions™ W150 Storage Cask and FuelSolutions™ W100 Transfer Cask were performed assuming each cask contains one FuelSolutions™ W21M-LS canister as a representative payload.

Three aspects of the FuelSolutions™ canister designs affect the resulting component dose rates: the shield plug and closure plate materials and thicknesses, the basket materials of construction and arrangement, and the number and type of fuel cell locations. Of these three, the shield plug design is the most significant because of the way fuel cooling times are specified. Since the fuel cooling tables are designed to maintain the storage cask surface dose rate at or below a design value, the design of the basket structure and number and type of fuel cells is less important because their effects are accounted for directly in the adjoint shielding models developed for each FuelSolutions™ canister.

For the purpose of calculating dose rates at the ends of the canisters or casks, it is important to consider the thickness and material types of the canister shield plugs and closure plates. The approach used is to model a bounding case due to the large number of combinations. Because most exposure from an ISFSI occurs during storage mode, the canister in a storage cask is chosen to evaluate the worst case canister subtype. The carbon steel shield plug canister type is assumed to be the worst case because its thicker bottom shield plug raises the active fuel region higher than the lead or depleted uranium designs. This maximizes the air outlet dose rates because the active fuel region is the closest to the vents.

The thicknesses of the bottom and top steel shield plugs are the same for all FuelSolutions™ canisters. Therefore, any differences in transfer cask and storage cask end dose rates are due to differences in fuel payload source strengths and differences in the self-shielding within the canister interior source regions. Maximum storage cask side dose rates are ensured to be under 50 mrem/hr for all FuelSolutions™ canister types and for all allowable fuel payloads by the cooling table (adjoint) shielding calculations. The primary shielding analyses are performed based upon a W21 canister inside the storage and transfer casks. As discussed in Section 5.1.3 of this FSAR, supplementary shielding analyses are performed to evaluate any differences in dose rates at locations other than the storage cask side that may occur for other canister types and fuel payloads.

The following sections describe the axial and radial shielding configurations for each of the casks analyzed.

5.3.2 Storage Cask

Four sets of shielding analyses are performed on the FuelSolutions™ W150 Storage Cask.

The first set of calculations, described in Section 5.3.2.1, are the adjoint calculations used for constructing fuel cooling tables. These calculations are performed with two-dimensional (X-Y) models using the DORT shielding code.

The second set of calculations, described in Section 5.3.2.2, are the forward bulk shielding calculations which are used to determine gamma and neutron dose rates on and near the storage cask side and end surfaces. These calculations are performed with two-dimensional (R-Z) models using the DORT shielding code. The results from these calculations are also used to estimate localized shielding effects for accident conditions where concrete is postulated to spall as a result of the accident. These models are also used to provide bounding estimates of the neutron dose rates at the storage cask inlet and outlet vents.

The third set of calculations, described in Section 5.3.2.3, determine the gamma dose rates at the storage cask inlet and outlet vents. These calculations also determine the dose rates at various distances from the vents. They are performed with detailed three-dimensional models using the MCNP Monte Carlo shielding code.

The fourth set of calculations, described in Section 5.3.2.4, determine the dose rate as a function of distance from a large (8x8) array of casks. These calculations, performed with the MCNP Monte Carlo shielding code, consider cask self-shielding effects, and the effects of air and ground radiation scatter.

Each of the four sets of analyses uses a different shielding model geometry. Therefore, the shielding model geometry for each case is described further in the appropriate following section (i.e., in Sections 5.3.2.1, 5.3.2.2, 5.3.2.3, and 5.3.2.4). A description of the shield region materials used in all of the storage cask shielding analyses follows in Section 5.3.4.

5.3.2.1 Storage Cask DORT Adjoint Models

The storage cask adjoint models are used to derive adjoint importance functions, which are in turn used as input for creating the fuel cooling tables. Storage cask adjoint models are canister-unique, therefore this section describes the models on a generic basis only. Chapter 5 of each FuelSolutions™ Canister Storage FSAR describes the canister-specific storage cask adjoint models.

The storage cask adjoint models are intended to derive a set of importance functions by energy group which relate the radiological source term inside the canister to a dose rate on the outside of the storage cask. This is accomplished using a horizontal slice (or cross section) through the storage cask at the midplane of the active fuel (or location of source peak). In this way, the azimuthal peak can be determined (i.e., the point along the circumference of the “slice” with the highest dose rate). Figure 5.3-1 shows a sketch of the radial shielding configurations, along with the dose point location and significant shield dimensions used for the analysis.

Each model includes a canister with SNF assemblies. The canister interior source zone, which includes the area within the perimeter defined by the outer canister guide tubes, is filled with a homogenized material. The masses of the various materials that lie within the source region are divided by the source region volume to yield volume fractions (and partial densities) for those materials within the homogenized material mixture. This material mixture includes the fuel and cladding materials, plus the guide tube, poison sheet, and poison sheet wrapper materials, as applicable. All other canister interior materials are conservatively neglected. Specifically, the canister spacer plates are conservatively neglected in the adjoint shielding models. The canister shell is modeled, as shown in Figure 5.3-1; however, the storage cask thermal shield and rails are

conservatively ignored. The storage cask steel liner and concrete are modeled as shown in Figure 5.3-1.

These models are used only for generating adjoint response functions for creating fuel cooling tables. There are no accident conditions modeled using the storage cask adjoint cases.

5.3.2.2 Storage Cask DORT Forward Models

The storage cask shielding models are used to estimate dose rates at and around the surfaces of the storage cask, including the side walls, top, and bottom surfaces. These models are intended for bulk shielding only and are not representative of the localized gamma dose rates near storage cask penetrations, such as the inlet and outlet vents. These bulk shielding models are used, however, to calculate (very conservative) upper bound neutron dose rates at the inlet and outlet vents, as discussed below.

The storage cask shielding models are R-Z representations of the cask and canister's main features, including the active fuel region, zones for irradiated fuel hardware at the top and bottom ends of the active fuel region, the canister wall, shield plugs and closure plates, and the storage cask body including the steel liner, top closure assembly, shielding ring, and ram access penetration. A scale drawing of the DORT model is shown in Figure 5.3-4, which includes the material zones and dimensions. Features which are local or insignificant for shielding purposes have not been included in the models, including the cask rails, canister standoffs, heat shield, tie rods, and construction joints.

Each model includes a canister with SNF assemblies. The assemblies are modeled as five homogenized regions. Canister internals are homogenized into the non-fuel areas of the canister cavity that lie within the "source zone radius." This radius defines a cylinder with an area equal to the area inside the perimeter defined by the outer edge of the outermost canister guide tubes. The masses of the various materials that lie within the source region are divided by the source region volume to yield volume fractions (and partial densities) for those materials within the homogenized material mixture. The homogenized material mixture includes the fuel and cladding materials, plus the guide tube, poison sheet, and poison sheet wrapper materials, as applicable. All other canister interior materials (including the spacer plate steel that lies within the source zone radius) are conservatively neglected. In the region of the canister interior outside the source zone radius, an array of thirty-five 0.75-inch thick carbon steel spacer plates, at a regular spacing of 4.685 inches, is modeled. The 2.0-inch thick stainless steel spacer plate at the top of the canister cavity is also modeled. The canister shell is modeled, as shown in Figure 5.3-4; however, the storage cask thermal shield and rails are conservatively ignored.

A variation of the DORT shielding model is used to calculate upper bound neutron dose rates at the storage cask inlet and outlet vents. In these models, entire axial sections of the storage cask shielding configuration, with heights equal to that of the inlet and outlet vents, are removed. These models are extremely conservative in that the bends in the ducts are not considered, and in that the shielding is removed over the entire azimuthal span, whereas the ducts are azimuthally localized. The shielding model geometry used to estimate the neutron dose rates at the inlet and outlet vents is very similar to the one shown in Figure 5.3-2 (which describes the MCNP model geometry used to calculate the duct gamma dose rates, as discussed in Section 5.3.2.3). The difference is that the downward bend in the outlet duct shown in Figure 5.3-2 is not modeled. A straight section of equal axial height is modeled. The other difference is that the axial inlet and

outlet duct sections shown in the figure are removed over the entire azimuthal span in these models, whereas in the actual (gamma) MCNP duct models, the ducts are modeled more accurately (i.e., the material that lies between the ducts, in the azimuthal direction, is modeled).

As shown in Figure 5.3-4, the top nozzle (or end fitting) region extends to the top of the canister cavity in the storage cask shielding model. This is done even though space (seven inches) would exist in the actual canister cavity above the top of the B&W 15x15 assembly (the assembly upon which the design basis [bounding] top nozzle gamma source strength is based). The top nozzle region source strength is evenly distributed throughout this extended top nozzle zone in the shielding analyses. Although the gamma source for the top nozzle region includes the source from a worst case control component head, no additional (self-shielding) material is added to the top nozzle region in the shielding models.

For the lid removed case shown in Table 5.1-1, the cask shield lid materials shown in Figure 5.3-4 are removed. The cask shield lid consists of the concrete shown at the cask top end, plus the one-inch thick disk of steel that lies above the top surface of the concrete. Thus, in the shielding model, the concrete that lies within a 33.0-inch radius and between the elevations of 216.0 and 229.0 inches (as shown in Figure 5.3-4), and the 1.0-inch thick steel disk that lies above the 229.0-inch elevation (as shown in Figure 5.3-4) is removed.

5.3.2.3 Storage Cask MCNP Forward Models

Dose rates at (and some distance away from) the storage cask air inlet and outlet vents are calculated using the MCNP Monte Carlo shielding code. These calculations were performed using rigorous three-dimensional models of the cask and vent duct geometry.

The MCNP models do not include canisters or canister internals because they use flux output from the forward storage cask DORT runs (Section 5.3.2.2) as source terms.

There are no postulated accidents which significantly alter the configuration of the storage cask inlet or outlet vents, therefore no accident models are generated.

5.3.2.3.1 Outlet Vent Shielding Model Geometry

The three-dimensional MCNP model used for the outlet duct dose rate calculation is illustrated in Figure 5.3-2. It shows a vertical section view of the model geometry. The outlet vent model covers one quarter of the cask geometry. The storage cask has four identical outlet vent geometries, with the rest of the cask geometry being radially symmetric. Thus, the cask can be divided into four identical 90-degree pie sections. If reflective boundary conditions are applied along the quadrant boundaries of a 90-degree pie section, the full cask geometry is rigorously modeled. Using a quarter cask model allows simplification of the shielding model along with improved code performance (i.e., lower levels of statistical error).

The outlet vent model extends axially from the cask top down to near the bottom of the fuel region (inside the canister). The assembly bottom nozzle sources and the geometry of the cask bottom end do not have any significant effect on the dose rates around the cask outlet vents. All of the significant geometry features of the cask top end, including the outlet vent duct structure, the canister shell, the canister shield and closure lids, the storage cask liner, the storage cask top lid, and the storage cask top shield ring, and the storage cask concrete shielding, are rigorously modeled in three dimensions.

The MCNP analyses use an input radiation flux over a cylindrical surface which corresponds to the outer boundary of the radiation source region (r = 82.23 cm). Thus, radiation shielding properties of the canister interior are treated in the DORT runs. Any shielding materials that lie between this defined cylindrical surface and the canister shell are conservatively neglected in the shielding analyses.

The model calculates dose rates at the outlet vent, and one meter from the outlet vent. Dose rates on the sections of the cask outer surface that lie between the outlet vents are also calculated. The model also determines dose rates at the entry to the outlet vent (on the storage cask liner surface), and at the bottom of the storage cask shield ring. These additional calculated dose rates are used to provide additional validation of the MCNP analysis results.

5.3.2.3.2 Inlet Vent Shielding Model Geometry

A vertical section view of the three-dimensional model used in the storage cask inlet vent shielding analysis is shown in Figure 5.3-2. Unlike the outlet vent model, the inlet duct model covers the full 360-degree azimuthal span of the cask geometry. Thus, all four inlet vent channels are explicitly modeled (although detectors are only placed at one of the channels). The model includes all significant geometrical features of the cask bottom end, including the canister shell and bottom lids, the storage cask liner, the space underneath the canister, the cylindrical ram penetration region, and the four air inlet vent channels.

Axially, the inlet vent model extends from the bottom of the cask to the top of the canister bottom lids (i.e., to the bottom of the canister interior cavity). The radiation sources from the canister interior are modeled by applying a defined radiation flux along a surface which lies along the top of the inlet vent shielding model. The model also includes a concrete pad under the cask to treat any particle scattering effects that may contribute to the dose rate at the inlet vents. This is the same geometry that is used in the DORT models that estimate the upper bound inlet vent neutron dose rates.

5.3.2.4 Storage Cask Array MCNP Forward Models

The dose rates at a distance from a large (8x8) array of FuelSolutions™ storage casks are calculated using the MCNP shielding code. The shielding model consists of a square array of simple concrete cylinders on a 36-inch thick concrete plane. This array of casks is surrounded by a large volume of air. Thus, both air and ground radiation scattering effects are considered by the analysis. Detector planes are placed at various distances from the cask array.

The concrete cylinders are 230 inches high and 69 inches in radius (the same envelope dimensions shown for the storage cask in Figure 5.3-4). Surface flux data, taken from the storage cask shielding model described in Section 5.3.2.2, is applied on the top and side surfaces of the concrete cylinders. Thus, the cask side surface flux corresponds to a peak cask side surface dose rate of 50 mrem/hr, as discussed in Section 5.4.3. The cask top surface flux calculated by the shielding analysis is scaled up to correspond to a cask top surface average dose rate of 50 mrem/hr, as discussed in Section 5.4.3. The casks in the array are spaced at a center-to-center distance of 207 inches (1.5 times the cask diameter).

The flux is generated within a 2.0-inch thick shell that lies on the surface of the cask. A 2.0-inch thick layer of concrete is modeled on the outer surfaces of the casks, just under the 2.0-inch source shell. This layer of concrete is modeled to treat any particle scattering effects within the

concrete near the cask surface. Particle scatter deeper within the concrete is not a significant effect. Inside the 2.0-inch concrete layer, the cask volume is "blacked out" in the shielding models (i.e., modeled as being impenetrable to radiation). This models the blocking of radiation by other casks in the array, and prevents the computer model from "wasting time" tracking particle scatter deep within the cask concrete.

Only one quadrant of the 8x8 cask array (and the surrounding geometry) is modeled in the shielding analyses. A 4x4 cask array is placed at the lower left corner of the shielding model, and reflective boundary conditions are applied on the X=0 and Y=0 surfaces (i.e., the planes which would bisect the 8x8 array of casks along the vertical and horizontal axes of the array). This treatment models an 8x8 cask array in all respects.

The regular square cask array described above, filled with storage casks with bounding surface dose rates, is used to provide an estimate of the maximum dose rates versus distance from an array of FuelSolutions™ W150 Storage Casks. Each cask user will have to perform a site-specific analysis, which considers the cask layout, number of casks, and the fuel payload present in each cask (at each location) in the ISFSI.

5.3.3 Transfer Cask

The transfer cask shielding models are used to estimate dose rates at and around the surfaces of the transfer cask, including the canister welding areas, for the purpose of estimating occupational exposures during canister closure and reopening.

The transfer cask shielding models are R-Z representations of the cask and canister's main features, including the active fuel zone, zones for irradiated fuel hardware at the top and bottom ends of the active fuel zone, the canister wall, shield plugs and closure plates, and the transfer cask body including the inner shell, outer shell, gamma shield, neutron shield, and closure plates. The DORT model is shown in Figure 5.3-3, which is a scale drawing that includes material zones and dimensions used in the models. Some features of the transfer cask are not included in the models either because they are insignificant for shielding, or they could not be readily modeled using DORT. These most notably include the ribs which support the cask neutron shield and the canister guide rails. For simplicity, the top cover lid and ram access lids are modeled as a single flat lid with shielding thicknesses equal to those of the cover lid.

There are eight variations of the same basic DORT model required to represent the transfer cask and canister configuration during the normal canister loading or unloading operations and for the loss of neutron shield accident:

- Case 1: Transfer cask just breaking the pool surface
  (shield plug in place, flooded annulus and cavity, cask submerged)
- Case 2: Transfer cask decontamination
  (like case 1, except cask in air, "water" removed from atop shield plug, annulus level lowered)
- Case 3: Inner closure plate welding
  (like case 2, except water level in annulus lowered for welding, inner closure plate and welder in place)

- Case 4: Canister drying
  (like case 3, except cavity drained)
- Case 5: Outer closure plate welding
  (like case 4, except outer closure plate and welder in place)
- Case 6: Canister transfer configuration
  (like case 5, except transfer cask covers in place - welder is removed)
- Case 7: Loss of transfer cask neutron shield accident
  (like case 6, except neutron shield water is replaced with air)
- Case 8: Horizontal transfer mode
  (like case 6, except ram access lid and bottom cover plate are removed)

Each model includes a canister with SNF assemblies. The assemblies are modeled as five homogenized regions for the included guide sleeve assemblies. Canister internals are homogenized into the non-fuel areas of the canister cavity that lie within the "source zone radius." This radius defines a cylinder with an area equal to the area inside the perimeter defined by the outer edge of the outermost canister guide tubes. The masses of the various materials that lie within the source region are divided by the source region volume to yield volume fractions (and partial densities) for those materials within the homogenized material mixture. The homogenized material mixture includes the fuel and cladding materials, plus the guide tube, poison sheet, and poison sheet wrapper materials, as applicable. All other canister interior materials within the source zone are conservatively neglected (including any spacer plate steel that lies within the source zone). In the region of the canister interior outside the source zone radius, an array of thirty-five 0.75-inch thick carbon steel spacer plates, at a regular spacing of 4.686 inches, is modeled. The 2.0-inch thick stainless steel spacer plate at the top of the canister cavity is also modeled. The canister shell is modeled, as shown in Figure 5.3-3; however, the storage cask thermal shield and rails are conservatively ignored.

The welding apparatus, which is included in the transfer cask shielding model for Cases 3, 4 and 5 (described above) consists of a 1.0-inch thick bottom carbon steel plate, 2.0-inches of RX-277 neutron shielding material, and a 1.0-inch thick top carbon steel plate. Other components of the welding apparatus are not modeled in the shielding analyses. The bottom steel plate has a 30-inch radius, and the RX-277 material and the upper steel plate have a radius of 27.5 inches.

As shown in Figure 5.3-3, a seven-inch space lies above the top nozzle (end fitting) region inside the canister interior. This is an accurate representation of the B&W 15x15 fuel assembly inside the W21-LS canister. The B&W 15x15 assembly (with an inserted thimble plug assembly) produces the highest gas plenum and top nozzle region source strengths. Part of the space above the top nozzle region would actually be occupied by the heads of inserted control components. The control component head material, however, is conservatively neglected in the transfer cask shielding model, even though the gamma source from the control component (a thimble plug assembly) is included in the top nozzle and plenum gamma source strengths. There are other assemblies that have longer top nozzles which get closer to the top of the canister cavity. However, these assembly top nozzles have lower overall gamma source strengths and higher metal masses (which provide more self-shielding). For these reasons, the B&W 15x15 assembly

configuration yields maximum transfer cask top end dose rates, despite the presence of a space above the top nozzle region.

5.3.4 Shield Regional Densities

The shield regional densities used for standard materials in the shielding analyses are summarized in Table 5.3-1 through Table 5.3-16.

Several canister-unique materials are required for the representative FuelSolutions™ W21 canister materials modeled in the storage and transfer cask models. These shield regional densities are summarized in Table 5.3-18. They are based on mass fractions of the standard materials in Table 5.3-1 through Table 5.3-17. The Top Nozzle "SC" material description shown in Table 5.3-18 is used for the top nozzle region in the storage cask models shown in Figure 5.3-2 and Figure 5.3-4. The Top Nozzle "TC" material description shown in Table 5.3-18 is used in the transfer cask model shown in Figure 5.3-3. The Above Top Nozzle material description shown in Table 5.3-18 is used for the region above the top nozzle region that occurs in the transfer cask model (as shown in Figure 5.3-3). As discussed in Section 5.3.3, this region may actually contain control component head material, but this material is conservatively neglected in the transfer cask shielding model.

As noted in Table 5.3-6, the concrete density is increased from the minimum specified value of 143 lb/ft^3 to 144 lb/ft^3 to partially account for the presence of steel reinforcing bars. Based upon their volume and density, the steel reinforcing bars would actually increase the average concrete density from 143 lb/ft^3 to 148 lb/ft^3. The shielding analyses assume the nominal density of pure concrete, 144 lb/ft^3. This is justified due to the presence of the reinforcing bars. Since the bars would actually increase the average concrete density to 148 lb/ft^3, the models are (conservatively) only taking 20% credit for the shielding properties of the reinforcing bars.

Table 5.3-1 - Properties for Type 304 SS

SS-304, ρ=8.027 g/cm^3		
Component	**atoms/b•cm**	**W_i**
Cr	1.767E-02	0.1900
Fe	5.887E-02	0.6800
Ni	8.236E-03	0.1000
Mn	1.760E-03	0.0200
Si	1.721E-03	0.0100

Table 5.3-2 - Properties for Type 316 SS

SS-316, ρ=8.027 g/cm^3		
Component	**atoms/b•cm**	**W_i**
Cr	1.581E-02	0.1700
Fe	5.670E-02	0.6550
Ni	9.883E-03	0.1200
Mn	1.760E-03	0.0200
Si	1.721E-03	0.0100
Mo	1.260E-03	0.0250

Table 5.3-3 - Properties for Borated SS

Borated SS, ρ=7.76 g/cm^3		
Component	**atoms/b•cm**	**W_i**
Cr	1.708E-02	0.1900
Fe	5.310E-02	0.6345
Ni	1.075E-02	0.1350
Mn	1.701E-03	0.0200
Si	1.248E-03	0.0075
B[(1)]	5.404E-03	0.0125

Note:

(1) Boron is modeled as natural boron (19.9 atom% B-10)

Table 5.3-4 - Properties for Inconel 718

Inconel 718, ρ=8.193 g/cm^3		
Component	**atoms/b•cm**	**W_i**
Cr	1.803E-02	0.1900
Fe	1.716E-02	0.1943
Ni	4.413E-02	0.5250
Mo	1.569E-03	0.0305
Ti	9.271E-04	0.0090
Nb+Ta	1.398E-03	0.0513

Table 5.3-5 - Properties for Carbon Steel

Carbon Steel, ρ=7.833 g/cm^3		
Component	**atoms/b•cm**	**W_i**
Fe	8.447E-02	1.0000

Table 5.3-6 - Properties for Concrete(1)

Concrete, ρ=2.3 g/cm^3(144 lb/ft^3)		
Component	**atoms/b•cm**	**W_i**
O	4.605E-02	0.5305
Al	1.745E-03	0.0339
Ca	1.507E-03	0.0435
H	1.419E-02	0.0103
Si	1.667E-02	0.3370
K	4.618E-04	0.0130
Na	9.666E-04	0.0160
Mg	1.257E-04	0.0022
Fe	3.457E-04	0.0139

Note:

(1) Minimum specified concrete density is 143 lb/ft^3. The concrete density was increased by 1.0 lb/ft^3 as partial credit for reinforcing steel.

Table 5.3-7 - Properties for NS-3

NS-3, ρ=1.76 g/cm^3		
Component	**atoms/b•cm**	**W_i**
Al	7.028E-03	0.1789
C	8.252E-03	0.0935
Ca	1.484E-03	0.0561
Fe	1.063E-04	0.0056
H	5.101E-02	0.0485
O	3.780E-02	0.5705
Si	1.268E-03	0.0336
B(1)	4.903E-04	0.0050

Note:

(1) Boron is modeled as natural boron (19.9 atom% B-10)

Table 5.3-8 - Properties for Depleted Uranium

Depleted Uranium, ρ=18.90 g/cm^3		
Component	**atoms/b•cm**	**W_i**
U-235	1.065E-04	0.0022
U-238	4.771E-02	0.9978

Table 5.3-9 - Properties for Lead

Lead, ρ=11.34 g/cm^3		
Component	**atoms/b•cm**	**W_i**
Pb	3.296E-02	1.0000

Table 5.3-10 - Properties for UO_2

UO_2, ρ=10.287 g/cm^3		
Component	**atoms/b•cm**	**W_i**
U-238	2.294E-02	0.8815
U-235	0.000	0.0000
O	4.590E-02	0.1185

Table 5.3-11 - Properties for Zircaloy

Zircaloy, ρ=6.56 g/cm^3		
Component	**atoms/b•cm**	**W_i**
Zr	4.271E-02	0.9860
Sn	4.660E-04	0.0140

Table 5.3-12 - Properties for Boral® (core)

Boral (core), ρ=2.481 g/cm^3		
Component	**atoms/b•cm**	**W_i**
Al	3.821E-02	0.6900
C	7.464E-03	0.0600
B[1]	3.317E-02	0.2400

Note:

(1) Boron is modeled as natural boron (19.9 atom% B-10)

Table 5.3-13 - Properties for Boral® (clad)

Boral (clad), ρ= 2.70 g/cm^3		
Component	**atoms/b•cm**	**W_i**
Al	6.027E-02	1.0000

Table 5.3-14 - Properties for Water

Water, ρ=1.00 g/cm^3		
Component	**atoms/b•cm**	**W_i**
H	6.687E-02	0.1119
O	3.343E-02	0.8881

Table 5.3-15 - Properties for Air

Air, ρ=0.00129 g/cm^3		
Component	**atoms/b•cm**	**W_i**
N	4.246E-05	0.7655
O	1.139E-05	0.2345

Table 5.3-16 - Earth, ρ=2.000 g/cm3

Earth, ρ=2.000 g/cm^3		
Component	**atoms/b•cm**	**W_i**
O	3.791E-02	0.5036
Al	3.212E-03	0.0719
Ca	3.089E-04	0.0103
C	1.031E-03	0.0103
Si	1.455E-02	0.3392
K	3.166E-04	0.0103
Na	3.769E-04	0.0072
Mg	3.056E-04	0.0062
Fe	8.867E-04	0.0411

Table 5.3-17 - Properties for RX-277

RX-277, ρ=1.68 g/cm^3		
Component	**atoms/b•cm**	**W_i**
O	3.709E-02	0.5865
Al	8.966E-03	0.2391
Ca	2.229E-03	0.0883
H	3.383E-02	0.0337
Si	7.674E-04	0.0213
B[(1)]	1.460E-03	0.0156
S	5.996E-05	0.0019
Na	2.597E-04	0.0059
Mg	2.082E-04	0.0050
Fe	4.892E-05	0.0027

Note:

(1) Boron is modeled as natural boron (19.9 atom% B-10)

Table 5.3-18 - W21 Canister Unique Mixtures[1]

Zone	Condition	Overall Material Density	Mass Fraction of Standard Material								
			Air	Water	Boral Core	Boral AL	Inc-718	SS-304	SS-316	UO_2	Zircaloy
Bottom Nozzle	Dry	1.393	0.8122		0.0144	0.0072	0.0184	0.1203	0.0275		
Fuel	Dry	2.597	0.7043		0.0144	0.0072			0.0275	0.1886	0.0580
Plenum	Dry	0.658	0.8929		0.0144	0.0072			0.0275		0.0580
Top Nozzle SC	Dry	0.718	0.8961		0.0144	0.0072	0.0090	0.0458	0.0275		
Top Nozzle TC	Dry	1.256	0.8294		0.0144	0.0072	0.0200	0.1015	0.0275		
Above Top Nozzle	Dry	0.277	0.9509		0.0144	0.0072			0.0275		
Bottom Nozzle	Flooded	2.204		0.8122	0.0144	0.0072	0.0184	0.1203	0.0275		
Fuel	Flooded	3.300		0.7043	0.0144	0.0072			0.0275	0.1886	0.0580
Plenum	Flooded	1.550		0.8929	0.0144	0.0072			0.0275		0.0580
Top Nozzle SC	Flooded	1.613		0.8961	0.0144	0.0072	0.0090	0.0458	0.0275		
Top Nozzle TC	Flooded	2.084		0.8294	0.0144	0.0072	0.0200	0.1015	0.0275		
Above Top Nozzle	Flooded	1.227		0.9509	0.0144	0.0072			0.0275		

Note:
(1) Canister interior source region material densities are calculated based upon a source zone radius of 27.933 inches.

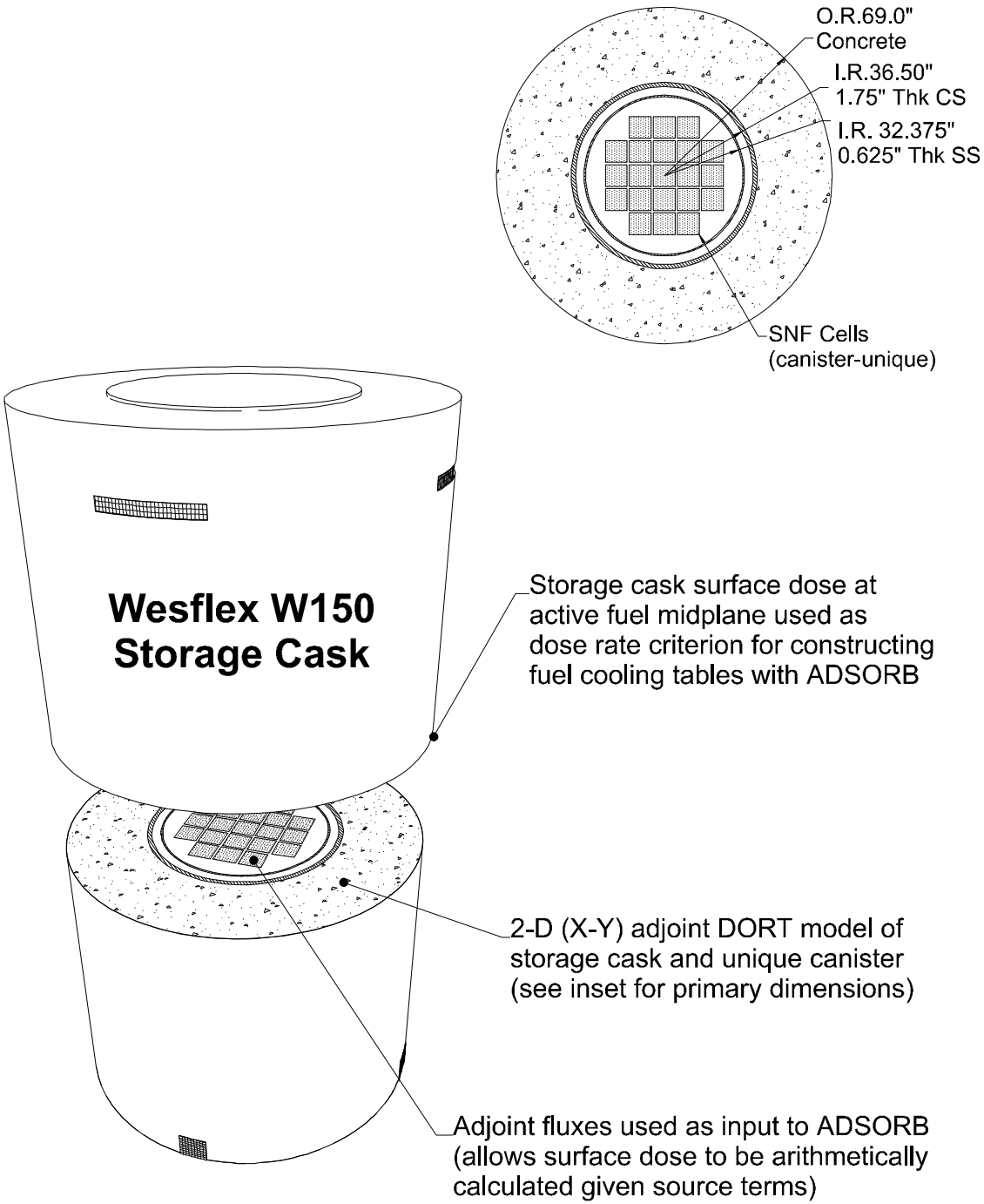

Figure 5.3-1 - Storage Cask Adjoint X-Y DORT Model (Representative W21 Canister Shown)

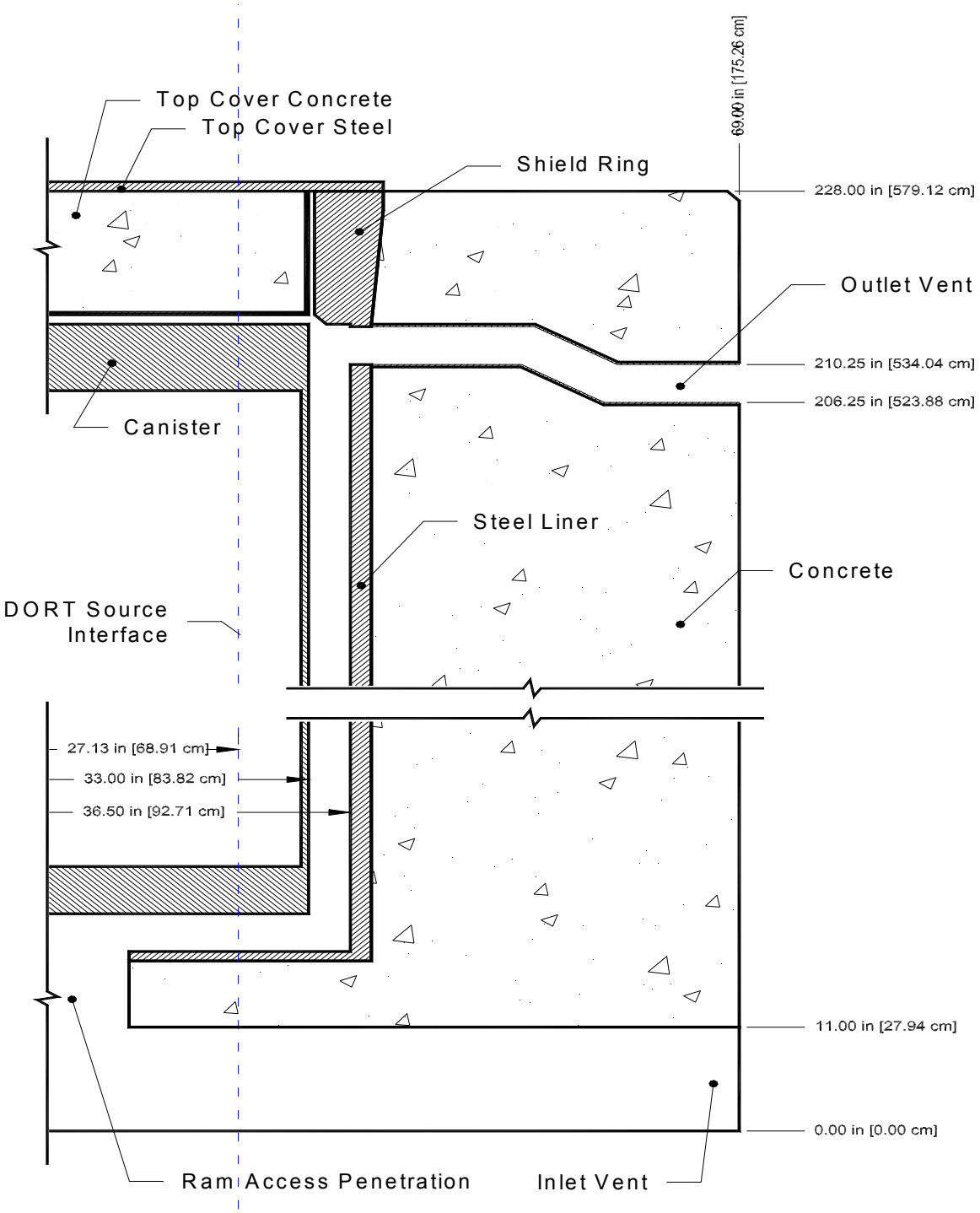

Figure 5.3-2 - Storage Cask MCNP Model

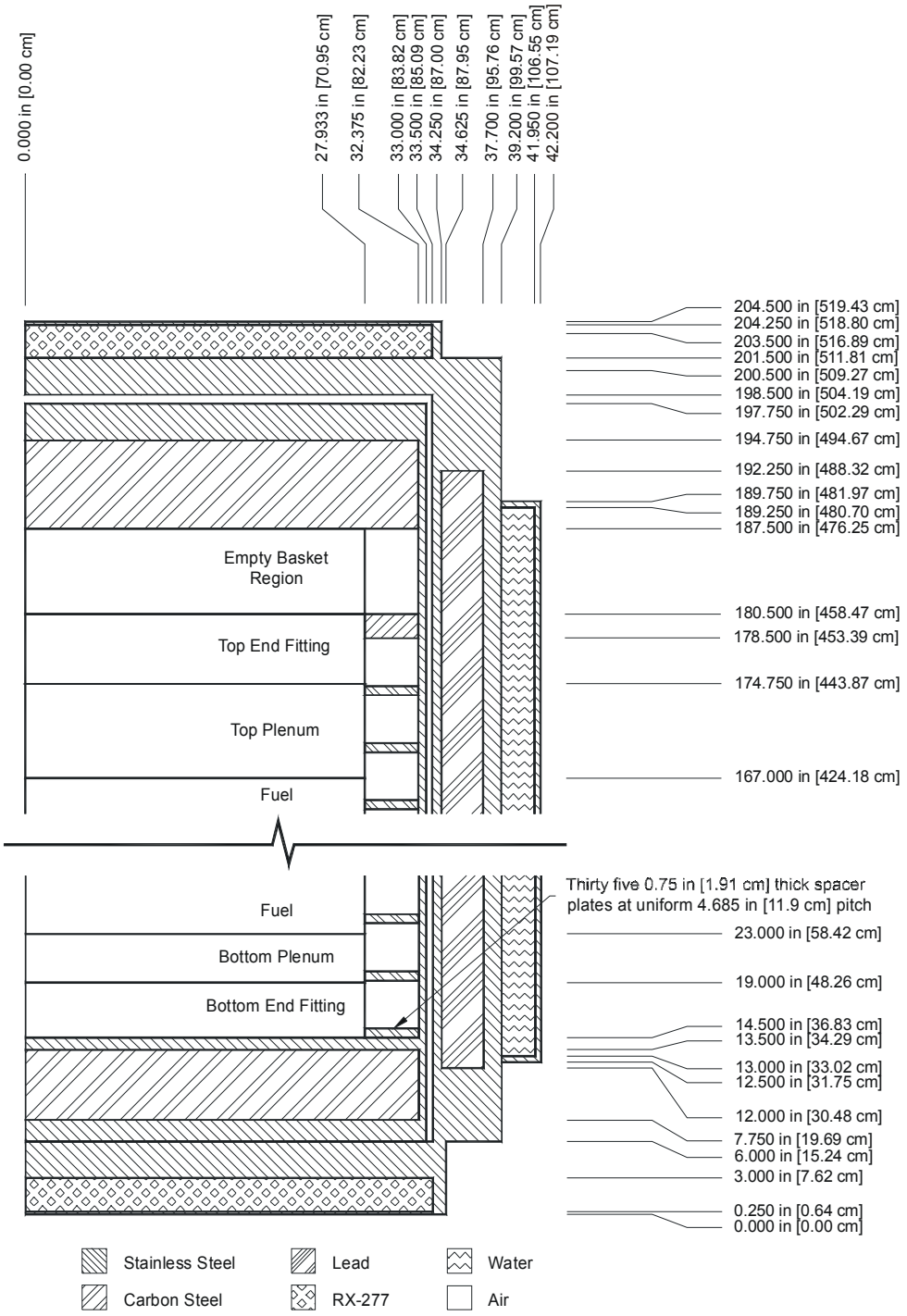

Figure 5.3-3 - Transfer Cask R-Z DORT Model

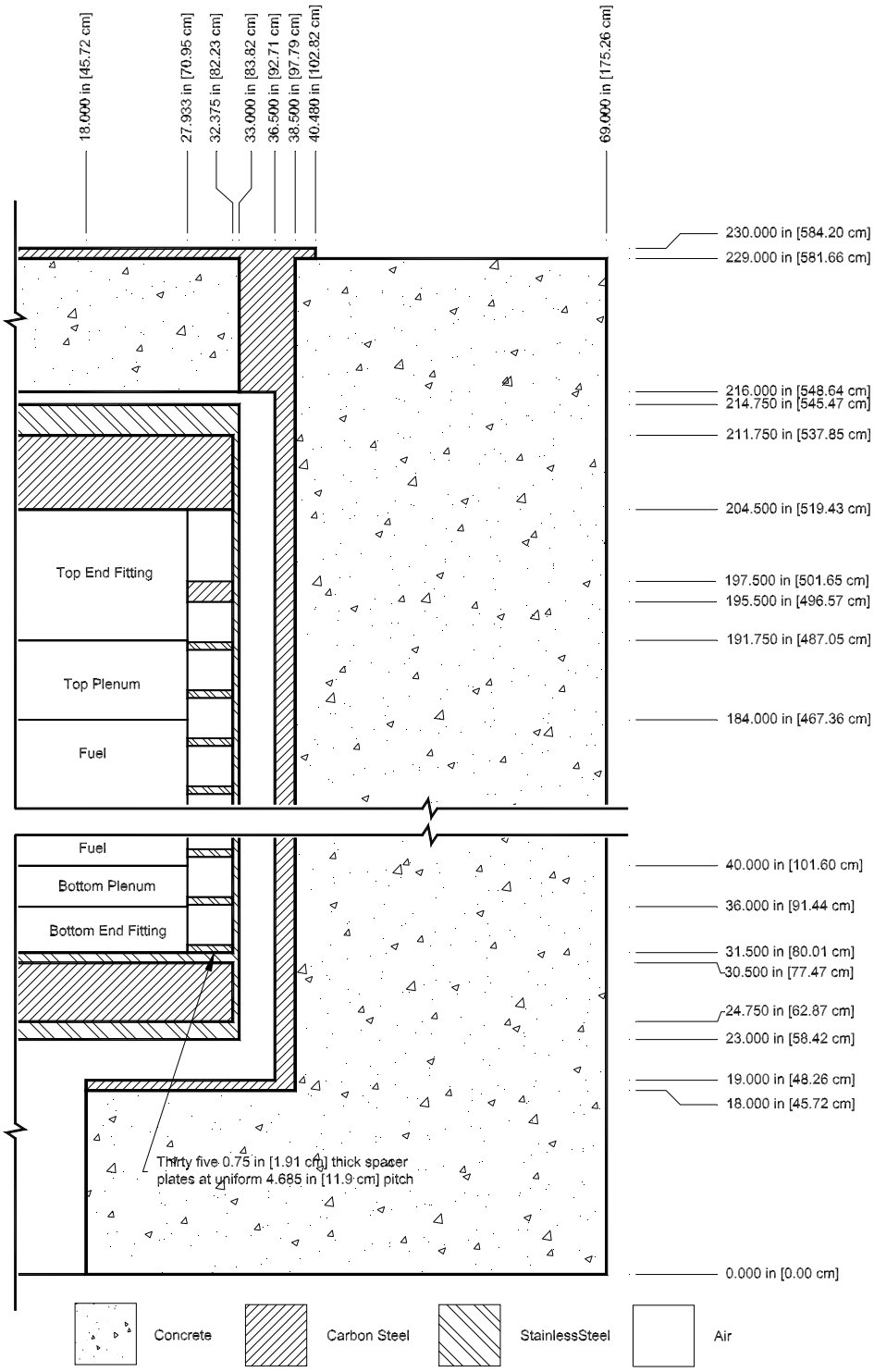

Figure 5.3-4 - Storage Cask R-Z DORT Model

This page intentionally left blank.

5.4 Shielding Evaluation

5.4.1 Storage Cask

Three sets of shielding analyses are performed on the FuelSolutions™ W150 Storage Cask. The adjoint models used for constructing fuel cooling tables are described in Section 5.3.2.1. These calculations are performed with two-dimensional (X-Y) models using the DORT shielding code. The forward bulk shielding models performed using DORT are described in Section 5.3.2.2. They are used to determine gamma and neutron dose rates on and near the storage cask side and end surfaces. They are also used to calculate the neutron dose rates at the inlet at outlet duct locations. Gamma dose rates at the storage cask inlet and outlet ducts are calculated using MCNP with the models described in Section 5.3.2.3. Finally, the dose rates at various distances from a large (8x8) array of storage casks are calculated using MCNP with the model described in Section 5.3.2.4.

5.4.1.1 Storage Cask DORT Adjoint Models

The storage cask adjoint models are used to construct FuelSolutions™ fuel cooling tables in the manner described in Section 5.2.1.2. These calculations are canister dependent because the required cooling times in the fuel cooling tables are a function of the number and physical properties of the SNF assemblies.

Chapter 5 of each FuelSolutions™ Canister Storage FSAR includes a full description of the adjoint models including any differences from the following generic description.

The adjoint storage cask calculations are performed using DORT with the BUGLE-93 cross-section library. The BUGLE-93 library is a 67 group coupled data set consisting of 47 neutron groups and 20 photon groups. Production of secondary photons via neutron capture in system materials is treated explicitly within the group to group transfer matrices as a down-scattering interaction from the individual neutron groups to the appropriate photon group.

The cross-sections are described by a polynomial expansion with an order of expansion of N, where the value of N is specified by the user. For a particular analysis, the order of expansion is chosen based on the degree of anisotropy expected in the zone of interest. The discrete ordinates calculations are performed using a P_3 (i.e., third order) expansion of the scattering cross-sections and a fully symmetric S_{16} quadrature set everywhere in the DORT models. This quadrature set provides 160 evenly distributed angles of integration for performing the discrete ordinates calculations.

Source terms for the adjoint cases are the flux-to-dose conversion factors. The basis for these factors is the ANSI/ANS-6.1.1-1977 data described in Section 5.5.1. Because the adjoint models are X-Y slices through the cask midplane, there are no axial source profiles. The effects of source axial profiles are accounted for in the production of the fuel cooling tables.

The methodology used to convert the DORT adjoint analysis output into the final adjoint importance values that are used in the cooling table calculations is described in detail in Section 5.5.4 of this FSAR. An example storage cask adjoint shielding model (DORT) input file is included in Section 5.5.5 of this FSAR.

The adjoint response functions output by the adjoint shielding calculations are multiplied by the per canister gamma and neutron source strengths that occur for various combinations of PWR and BWR assembly burnup, initial enrichment, and cooling time values. These source strengths are calculated, as a function of burnup, enrichment, and cooling time, on a per-MTIHM of fuel basis by the ORIGEN-2.1 point depletion code. Examples of the PWR and BWR ORIGEN-2.1 input files are also included in Section 5.5.5 of this FSAR.

5.4.1.2 Storage Cask DORT Forward Models

Bulk shielding storage cask dose rates are calculated using DORT with the BUGLE-93 cross-section library. The cross-sections are described by a polynomial expansion with an order of expansion of N, where the value of N is specified by the user. For a particular analysis, the order of expansion is chosen based on the degree of anisotropy expected in the zone of interest. A P_3 (i.e., third order) expansion of the scattering cross-sections is used throughout the DORT models. The forward DORT shielding analyses employ a biased 262-angle quadrature set. This quadrature set provides more angles of integration in the upward and downward directions. This allows adequate treatment of particle streaming effects up and down the annular gap between the canister and the casks.

The spatial source term definition consists of five axial regions representing the active fuel zone, a bottom and top gas plenum zone, and the top and bottom nozzle zones. Within the active fuel zone, allowances are made to account for the axial burnup profile, and for activation of fuel region assembly hardware, as described in Sections 5.2.2.2 and 5.2.2.3.

All storage cask calculations are performed using a 262-angle symmetric angular quadrature set. This quadrature is constructed to provide a fine angular definition in the axial direction in order to adequately treat the radiation streaming effects that occur in the annular gap located between the canister and the storage cask. The 262-angle quadrature used in these calculations is constructed by combining a 166 angle upward biased quadrature set (131 angles upward, 35 angles downward) with a 166 angle downward biased set (131 angles downward, 35 angles upward) to form a fully symmetric quadrature that enables the accurate calculation of streaming effects in both the upward and downward directions in a single calculation.

Calculated fluxes were converted to dose rates during the DORT run using the conversion factors described in Section 5.5.1.

Figure 5.4-1 and Figure 5.4-2 show the DORT results for the storage cask. The side wall dose rates are dominated by gamma rays, and the dose rate profile follows the characteristic burnup curve and cosine distribution. The profile rises from near zero at the ground to 33 mrem/hr over the peak burnup zone of the fuel, up to a peak dose rate of 44 mrem/hr over the top nozzle region of the assemblies, then back to about zero at the top corner. This curve provides good validation that the fuel cooling table methodology works (and is conservative) because the bounding fuel source is based on a cooling table constraint of 50 mrem/hr. This conservatism is primarily due to the fact that the cooling table calculations conservatively neglect the canister spacer plates. The typical fuel dose rate values are lower than the bounding case values by over a factor of four. The total dose rate curve (essentially all gamma) for the “typical” fuel source term is also shown in Figure 5.4-1. Figure 5.4-2 shows the dose rate profiles along the cask top surface for bounding and typical fuel sources. Dose rates for both source terms are well below 10 mrem/hr

along most of the surface except for a ring about 16 inches wide (above the annulus) where localized streaming produces a peak of 55 mrem per hour (bounding) and 18 mrem/hr (typical).

Figure 5.4-3 shows the DORT results from inside the storage cask concrete expressed as local increase factor vs. amount of concrete removed as a result of postulated accidents. These values are conservative since they are taken from inside the concrete and include backscatter. This effect can be seen near the zero loss end of the curve as a downward curvature due to neutron and gamma leakage in the model. To use the chart, look up the local dose increase factor based on the postulated depth of concrete loss. For instance, a 2-inch loss would result in about a factor of 2.3 increase in the local storage cask dose rate.

The spatial dose rate functions shown in Figure 5.4-1 and Figure 5.4-2 are taken from DORT calculations that are based upon the FuelSolutions™ W21 canister with the design basis payload described in Section 5.2.2.1 of this FSAR. However, as discussed in Section 5.1.3, the storage cask top dose rates are adjusted upwards (by 15% for gamma and a factor of 14.33 for neutron) in order to bound all FuelSolutions™ canister types and fuel payloads. The cask top gamma and neutron plot traces shown in Figure 5.4-2 have been scaled up by these factors.

DORT forward models are also used to calculate upper bound neutron dose rates at the inlet and outlet ducts. The DORT models used take no credit for the bend in the outlet duct. The models also remove an entire axial section of the shielding configuration with a height equal to that of the ducts (thus, no credit is taken for the shielding that lies between the ducts within those azimuthal spans).

5.4.1.3 Storage Cask MCNP Forward Models

The dose rates at the storage cask inlet and outlets vents are calculated using the MCNP Monte Carlo shielding code. The analyses are performed using rigorous, detailed, three-dimensional models of the cask end geometries. These models include explicit elemental material descriptions of each region of the shielding geometry. These material descriptions are given in Section 5.3.4 of this FSAR.

In order to achieve acceptably low levels of statistical error for vent dose rates, the following two-step approach is used for the inlet and outlet vent shielding analyses.

As discussed in Section 5.4.1.2, the DORT discrete-ordinates shielding code is used to calculate radiation fluxes on the storage cask side and ends. The same DORT code output which gives the fluxes (and dose rates) on the cask exterior, also gives radiation fluxes at all locations within the storage cask geometry, including the outer surface of the source region volume inside the canister. At any location within the model geometry, the DORT code outputs flux levels along with the energy and directional distributions of the flux. Thus, the DORT code can give a spatially variant flux over any defined surface within the shielding geometry. The spatial variation of the absolute flux level, the energy spectrum, and the directional distribution is also output by the code. Thus, a completely rigorous definition of the flux over any defined surface within the geometry can be output by the DORT code.

For the inlet and outlet vent shielding analyses, the DORT code is asked to give the flux description for a defined cylindrical surface inside the canister. This cylindrical surface is the outer envelope of the source region within the canister. The DORT code outputs the flux levels, along with the energy spectrum and spatial distribution of the flux, at all locations lying on this

surface. Due to the radial symmetry of the DORT model, the flux parameters will be azimuthally invariant, although they do vary axially.

This surface flux is used as direct input into the three-dimensional MCNP models. As discussed in Section 5.5.2.3, MCNP uses point-wise cross-section data, but an energy group structure may also be used for source or flux data input. Since the radiation source used in these MCNP calculations is actually a flux output by the DORT shielding code, which uses energy group structures, the same energy group structure used by DORT is used (for the flux data input) in the MCNP analyses.

MCNP generates a total of 5 million source particles along this source surface, based upon the axially dependent flux, energy, and directional distribution data output from the DORT analysis. Using this approach, a sufficient fraction of the initial 5 million generated particles reach the detectors (at the ends of the vents) to yield acceptably low levels of statistical error.

MCNP tallies the number of particles crossing certain defined surfaces in the system geometry in order to calculate dose rates. Thus, detectors are usually defined over surfaces with finite areas, as opposed to at point locations. For the vent shielding analyses, the vent detectors are defined as the entire area of the vent opening. Similar areas are used for detectors that are some distance away from the vents. For detectors on the cask surface between the vents, the detector heights are the same as that of the vent opening.

Due to the surface source approach described above, the source region materials and geometry (inside the canister) need not be modeled in the vent shielding analyses. The cask geometry outside the source region, however, is modeled in full three-dimensional detail.

The MCNP analyses require four sets of input data, the cask system geometry data, a complete elemental description of all shielding materials, the source region surface flux data output from the DORT analyses, and flux-to-dose conversion factor data. The MCNP vent streaming analyses use the same flux-to-dose conversion factors as the DORT shielding analyses. These factors are given in Section 5.5.1 of this FSAR.

In addition to using the surface source technique described above, the MCNP analyses also must use variance reduction techniques in order to yield sufficient levels of particle statistics within a reasonable amount of computer time. A weight window technique is used to give greater statistical “weight” to regions of the cask geometry that are closer to the outer surface of the cask (particularly around the vent opening exits). The code is effectively asked to take particles which have made it further along through the shielding materials (and are therefore more likely to make it out of the cask) and spend more time performing statistical analysis on them. This prevents the code from spending much time analyzing the trajectories of particles being generated at the source plane which have little chance of actually exiting the cask and contributing to cask exterior dose rates.

Using the weight window technique, along with the use of the canister surface source (output by DORT), the statistical error levels in the dose rates calculated at the inlet and outlet vent locations have been reduced to only a few percent. MCNP results are considered quite reliable if the levels of statistical error are this low.

A conservative, simplified DORT analyses show that the neutron dose rates at the outlet and inlet vent locations are insignificant compared to the gamma dose rates. Therefore, the vent

streaming calculations are only performed for gammas. The upper bound neutron dose rates produced by the DORT analyses are assumed for the inlet and outlet vent neutron dose rates.

Specific methodologies used in the inlet and outlet vent shielding analyses are discussed (separately) in the following sections.

5.4.1.3.1 Outlet Vent Analysis

The outlet vent shielding analysis is an explicit three-dimensional model which extends from the cask top to the bottom of the fuel source region within the canister (the cask bottom end geometry is not modeled). The model covers a 90-degree pie section of the cask geometry. The entire cask is effectively modeled using reflective boundary conditions. This model uses an input source flux (from the DORT output) which lies over the cylindrical (side) surface that is defined inside the canister shell. The primary detectors lie at the end (screen) of the outlet vent and one meter from the end of the outlet vent.

Dose rates are also tallied at the entry to the outlet vent (on the cask inner liner), at the bottom of the storage cask shield ring, and on the cask outer surface between the outlet vents. These additional dose rate tallies are performed to allow additional validation of the MCNP code results through comparison to DORT shielding code results. Results from the three-dimensional MCNP models (which include the presence of the outlet vents) are compared to those of two-dimensional DORT analyses (which do not include the presence of the vents).

At the bottom surface of the cask shield ring, a comparison analyses using DORT predicted a 30% higher gamma dose rate than MCNP. This is expected because the MCNP analyses model the outlet vents, which remove the cask liner over a significant fraction of the cask azimuthal span. This reduces particle backscatter and reduces the gamma dose rate at the bottom of the shield ring. These comparisons add confidence in the MCNP results for the outlet vent region of the cask geometry.

A comparison of MCNP calculated dose rates on the storage cask side and top surfaces to corresponding DORT dose rates was performed to give confidence in the MCNP inlet and outlet duct dose rate results. The MCNP and DORT results were in excellent agreement (to within 3%, which is about the level of statistical error in the MCNP results) on the cask side surface. On the cask top surface, the DORT calculated dose rates were ~25% higher than those calculated by MCNP.

5.4.1.3.2 Inlet Vent Analysis

The inlet vent analysis is performed using a rigorous three-dimensional model of the cask bottom end. The model covers the entire azimuthal span of the cask geometry, and models all four inlet vents. The model starts at the bottom of the canister interior (i.e., at the bottom of the actual source regions), and models the cask bottom geometry along with a layer of concrete slab.

In this analysis, the radiation source is modeled as a defined flux over the top surface of the model. The flux over this planar surface (which forms the bottom surface of the canister interior source region) is output by the DORT shielding analysis. This output gives the spatially variant flux over this surface, along with any (spatially varying) energy and angular distribution data.

Dose rates are tallied over the area of the inlet vent screen, as well as over similar areas at distances between 0 and 3 feet from the screen. Also, dose rates are tallied over two azimuthal

sections of the cask surface that lie between the inlet vents. Dose rates are also calculated on the bottom surface of the storage cask, over the cylindrical ram access penetration in the cask bottom shielding. Dose rates one meter from this area of the cask bottom surface are also calculated.

5.4.2 Transfer Cask

Transfer cask dose rates are calculated using DORT with the BUGLE-93 cross-section library. A P_3 expansion of the scattering cross-sections is used throughout the DORT models.

The spatial source term definition consists of five axial regions representing the active fuel zone, plus three non-fuel regions including the top and bottom nozzle regions and the gas plenum region. Within the active fuel zone, allowances are made to account for the axial burnup profile and assembly hardware activation, as described in Sections 5.2.2.2 and 5.2.2.3.

All transfer cask calculations are performed using a 262-angle symmetric angular quadrature set. This quadrature is constructed to provide a fine angular definition in the axial direction in order to adequately treat the radiation streaming effects that occur in the annular gap located between the canister and the transfer cask. The 262-angle quadrature used in these calculations is constructed by combining a 166 angle upward biased quadrature set (131 angles upward, 35 angles downward) with a 166 angle downward biased set (131 angles downward, 35 angles upward) to form a fully symmetric quadrature that enables the accurate calculation of streaming effects in both the upward and downward directions in a single calculation.

Calculated fluxes are converted to dose rates during the DORT run using the conversion factors described in Section 5.5.1.

Figure 5.4-4 through Figure 5.4-6 show the transfer cask shielding results for the cask decontamination, transfer, inner closure plate welding, and outer closure plate welding operational steps. These cases were run for the purpose of estimating operational radiation exposures. Gamma, neutron, and total dose rates are presented for bounding and typical conditions. Peak dose rates are reported for both the typical and bounding fuel source terms in Table 5.1-2.

The cask decontamination step configuration has no inner or outer canister closure plates, and the canister cavity, cask-canister annulus, and neutron shield cavity are all filled with water. As a result, the gamma doses are relatively high and neutron doses are negligible, as shown in Figure 5.4-4. The side wall gamma dose rate is representative of the axial burnup profile, and shows the effects of shielding discontinuities at the ends of the cask gamma shield and due to the end fitting source terms. For bounding fuel, the dose rate is ~200 mrem/hr over most of the cask height, with a localized peak dose rate of ~225 mrem/hr over the assembly bottom nozzle region. For typical fuel, the dose rate is under 60 mrem/hr over the entire cask side. The dose rate profile across the top of the canister/cask shows a characteristic cosine falloff. Figure 5.4-5 shows the same four dose rate profiles, except for the transfer configuration. The canister is filled with helium and sealed, and the neutron shield is filled with water. Comparing with Figure 5.4-4 along the cask side surface, the effects of draining the canister cavity and annulus increase the relative contribution from neutrons. The profiles still have the same characteristic shapes, except that the streaming effects near the top of the cask are mitigated by the added shielding from the two canister closure plates and the cask cover plate. Moving across the transfer cask top surface,

the dose rates are substantially lower for the transfer configuration due to the added attenuation from the closure plates and cover.

Figure 5.4-6 shows the dose rates that occur on the canister top surface during the inner and outer canister closure plate welding operations. These are two very significant operations with respect to overall personnel exposure during the canister loading process. Dose rates (vs. radius) are presented for the canister top surface for both bounding and typical conditions.

The dose rates are relatively low over the central region of the canister lid, where the welding apparatus is providing supplemental shielding. Dose rates are ~100 mrem/hr over this region, even for bounding fuel. Typical fuel dose rates are under ~25 mrem/hr. In the vicinity of the canister edge, where radiation streaming up the canister/cask gap occurs, and where the welding apparatus does not provide shielding, the dose rates are significantly higher. Dose rates may exceed one rem in this region, as shown by the bounding condition outer closure plate welding plot presented in Figure 5.4-6. As shown in the typical condition plot, however, the dose rates at this location are expected to remain under ~400 mrem/hr for the great majority of actual casks loaded. The dose rates over this localized area may be substantially reduced through the use of temporary shielding such as lead-shot filled tubing or bags.

As discussed in Section 5.1.3 of this FSAR, the DORT analyses calculate dose rates based upon a FuelSolutions™ W21 canister containing PWR fuel assemblies with the design basis source strengths given in Section 5.2 of this FSAR. These calculated dose rates are multiplied by various gamma and neutron dose rate adjustment factors which vary by detector location. These adjustment factors are shown in Table 5.1-3 for each location presented in Table 5.1-2. Each of the plots shown in Figure 5.4-4 through Figure 5.4-6 corresponds to one of the locations listed in Table 5.1-2. Table 5.1-3 gives the gamma and neutron dose rate adjustment factors that are applied for each such location. The plot traces shown in Figure 5.4-4 through Figure 5.4-6 are multiplied by the corresponding adjustment factors that are shown in Table 5.1-3.

Typical case transfer cask dose rates are only calculated for the transfer configuration. Typical case gamma and neutron dose rates calculated for the transfer configuration are compared to the bounding case gamma and neutron dose rates to yield gamma and neutron adjustment factors (typical/bounding) for the top, side, and bottom of the transfer cask. These dose rate ratios are determined based upon the dose rates presented in Table 5.1-2. For the other transfer cask configurations (including the decontamination and welding configurations) the bounding condition gamma and neutron dose rates are multiplied by these factors to yield the typical case gamma and neutron dose rates. The typical case plot traces shown in Figure 5.4-4 through Figure 5.4-6 are determined from the bounding case plot traces using this approach. The typical case gamma dose rates are 0.35, 0.35, and 0.17 times the bounding condition dose rates for the transfer cask side, top, and bottom, respectively. The typical case neutron dose rates are approximately 1.9 times the bounding condition dose rates for the transfer cask side, top, and bottom, respectively.

It should be noted that the dose rates shown for the welding operations in Figure 5.4-6 assume the presence of the welding apparatus, as described in Section 5.3.3.

The loss of neutron shield accident case results in transfer cask side wall dose rates of less than ~7 rem/hr on the cask side surface to ~2 rem/hr at one meter from the cask side surface assuming the cask is loaded with the “maximum” SNF fuel source. The exposures are nearly all due to

neutrons. Because the fuel cooling table state point is chosen to yield maximum neutron production, these calculated estimates are considered very conservative.

The dose rates presented in this section are calculated using radially symmetric models of the transfer cask and canister. Some azimuthal variation in dose rates is expected due to azimuthal asymmetries in the canister interior geometry. However, these variations are small (on the order of ~2%).

An example DORT input file for the transfer cask forward shielding analysis is included in Section 5.5.5 of this FSAR.

5.4.3 Storage Cask Array Analyses

Dose rates versus distance from a large (8x8) array of W150 Storage Casks is calculated using the shielding model described in Section 5.3.2.4. This model consists of an array of casks on a 36-inch thick concrete plane. This array of casks is surrounded by a large volume of air. Detectors are placed at various distances from the cask array. Gamma and neutron storage cask surface fluxes are taken from the storage cask shielding analyses and are generated within a 2-mm thick layer on the top and side surfaces of the casks within the array. The gamma fluxes calculated over the outlet vent area are applied over regions of equal area (and location) on the surface of the storage cask. The contributions from the inlet vents and the neutron contributions from the outlet vents are considered negligible, and are therefore not treated. The casks are made "black" to gamma and neutrons, to account for self shielding of casks within the array.

As discussed in Section 5.1, the cask top dose rate specification is a 50 mrem/hr surface average dose rate. As discussed in Section 5.4.1.2, the average cask top surface dose rate is significantly less than 50 mrem/hr, even for a bounding fuel payload. However, for conservatism, and to provide a basis for the 50 mrem/hr cask top dose rate specification, the cask top surface gamma and neutron fluxes output by the forward DORT analyses are scaled up by a factor so that they would correspond to a surface average total dose rate of 50 mrem/hr.

The (average) gamma and neutron dose rates that occur over the detector areas are tallied. Also, runs modeling radiation from the cask top and cask side surfaces are performed separately. Thus, separate dose rate tallies are performed for the cask side gamma, cask side neutron, cask top gamma, and cask top neutron dose rate contributions (at each detector location).

The results of the off-site dose calculation are discussed in Chapter 10 of this FSAR.

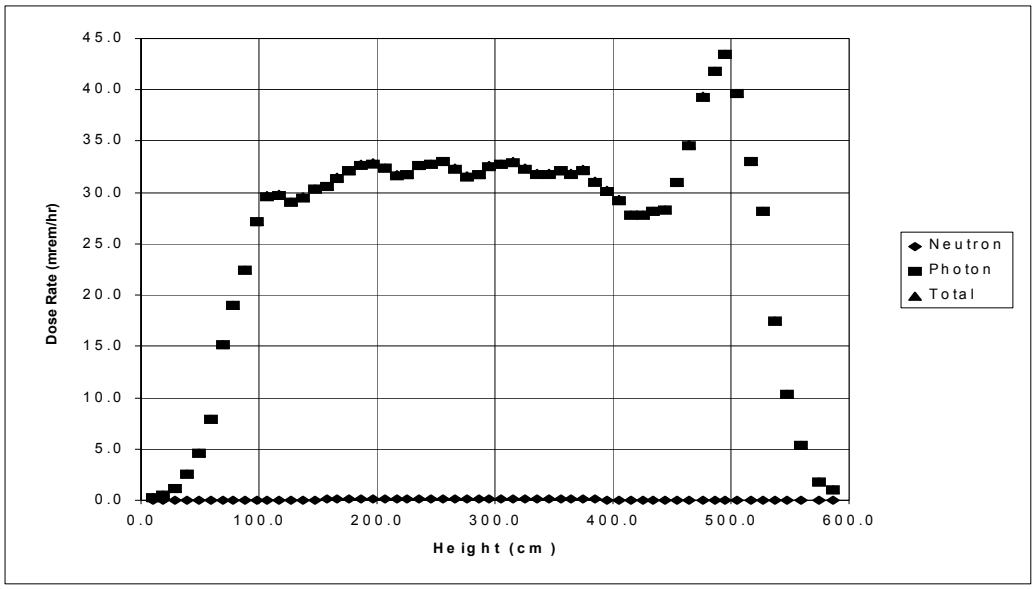

Bounding Conditions

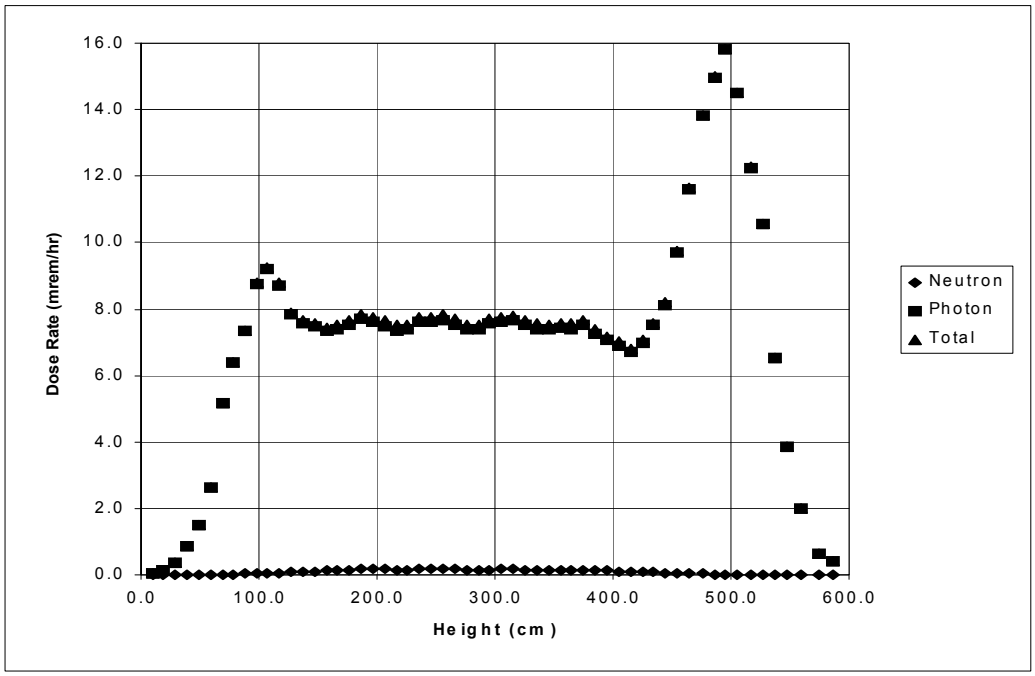

Typical Conditions

Figure 5.4-1 - Storage Cask Side Wall Dose Rates

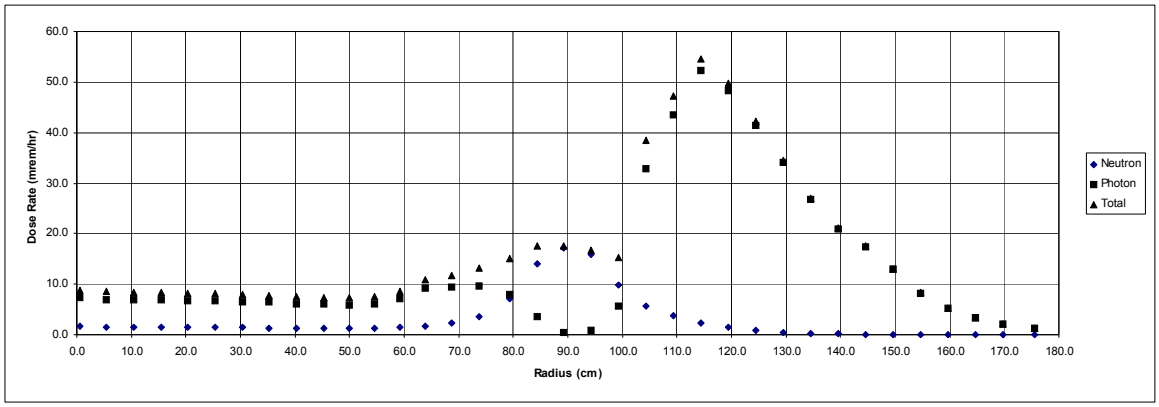

Bounding Conditions

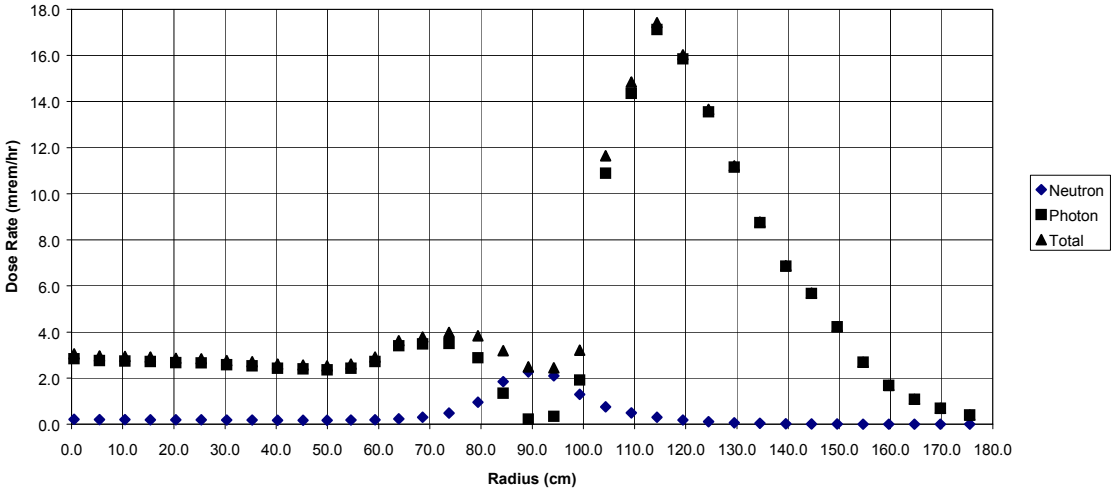

Typical Conditions

Figure 5.4-2 - Storage Cask Top Dose Rates

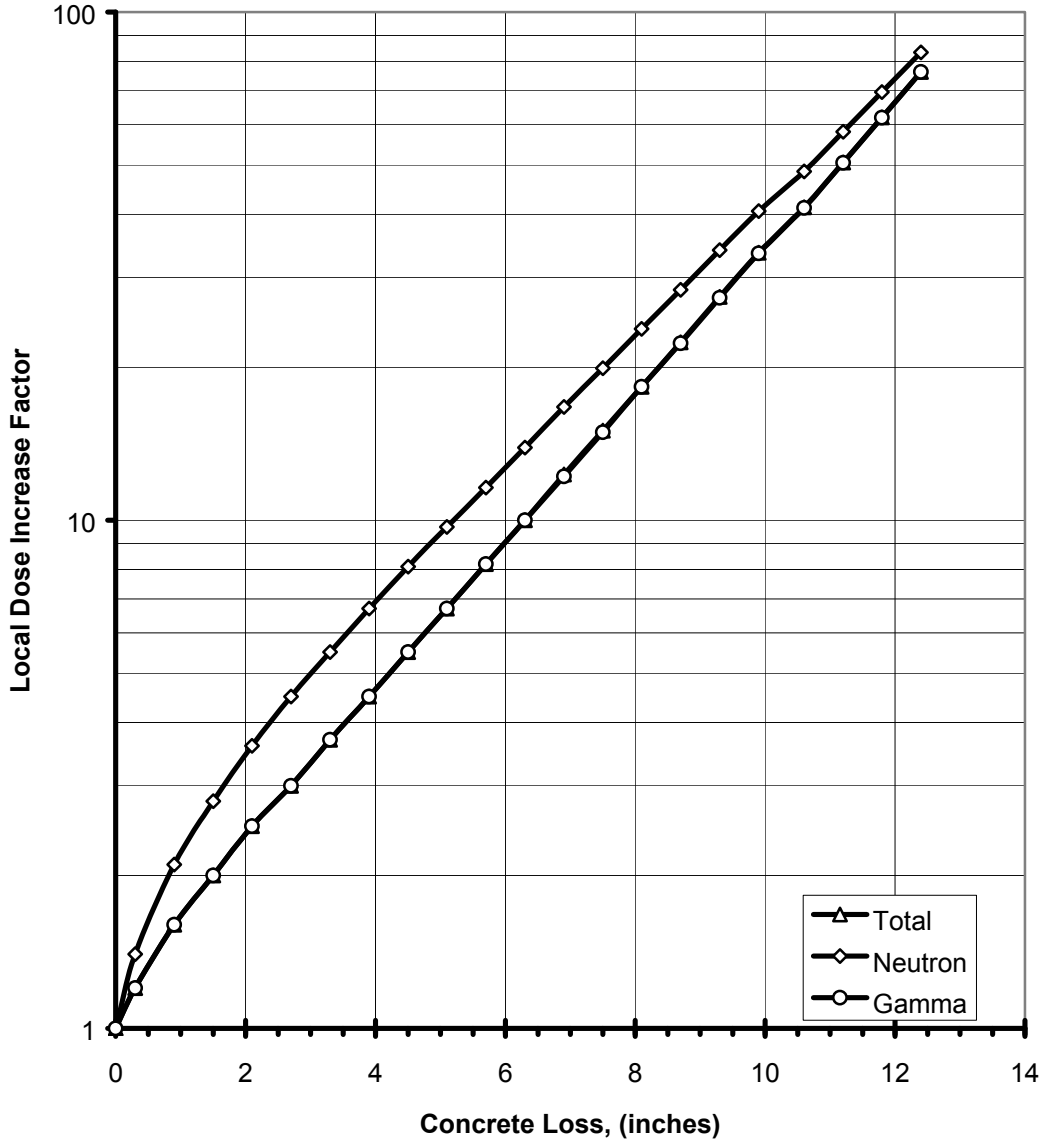

Figure 5.4-3 - Storage Cask Accident Dose Rates

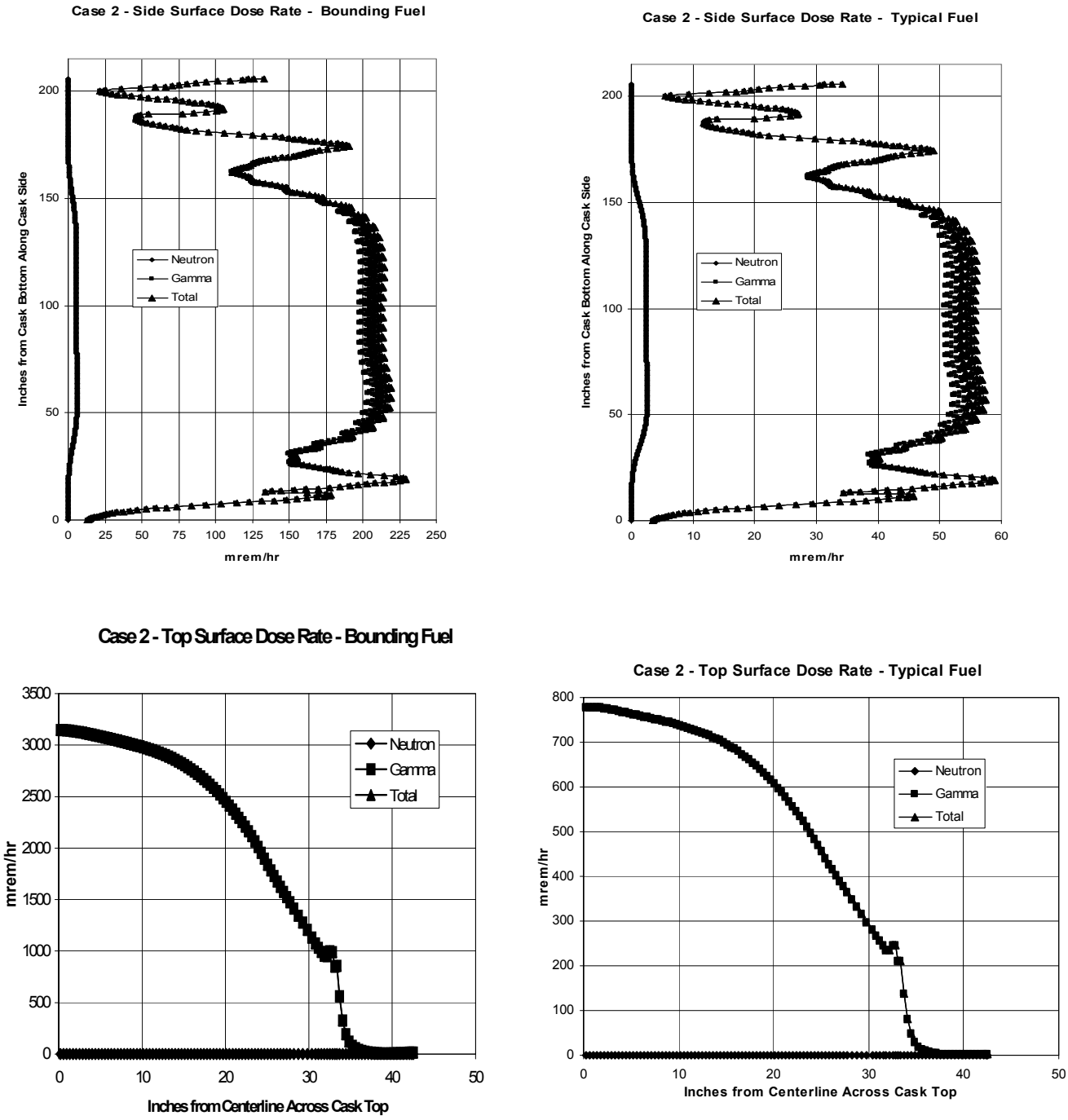

Figure 5.4-4 - Transfer Cask Dose Rates (Case 2 - Cask Decontamination Configuration)

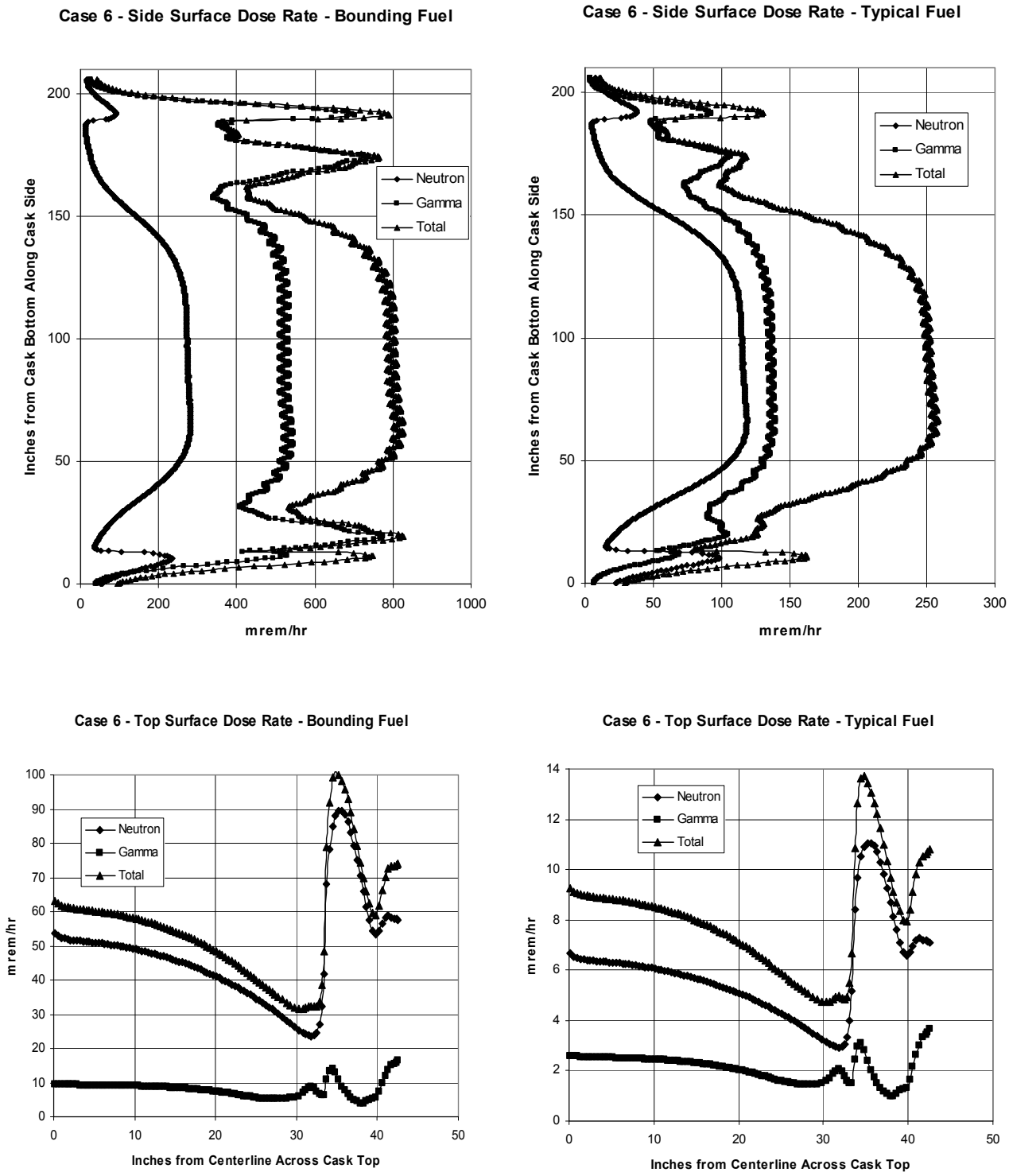

Figure 5.4-5 - Transfer Cask Dose Rates (Case 6 - Transfer Configuration)

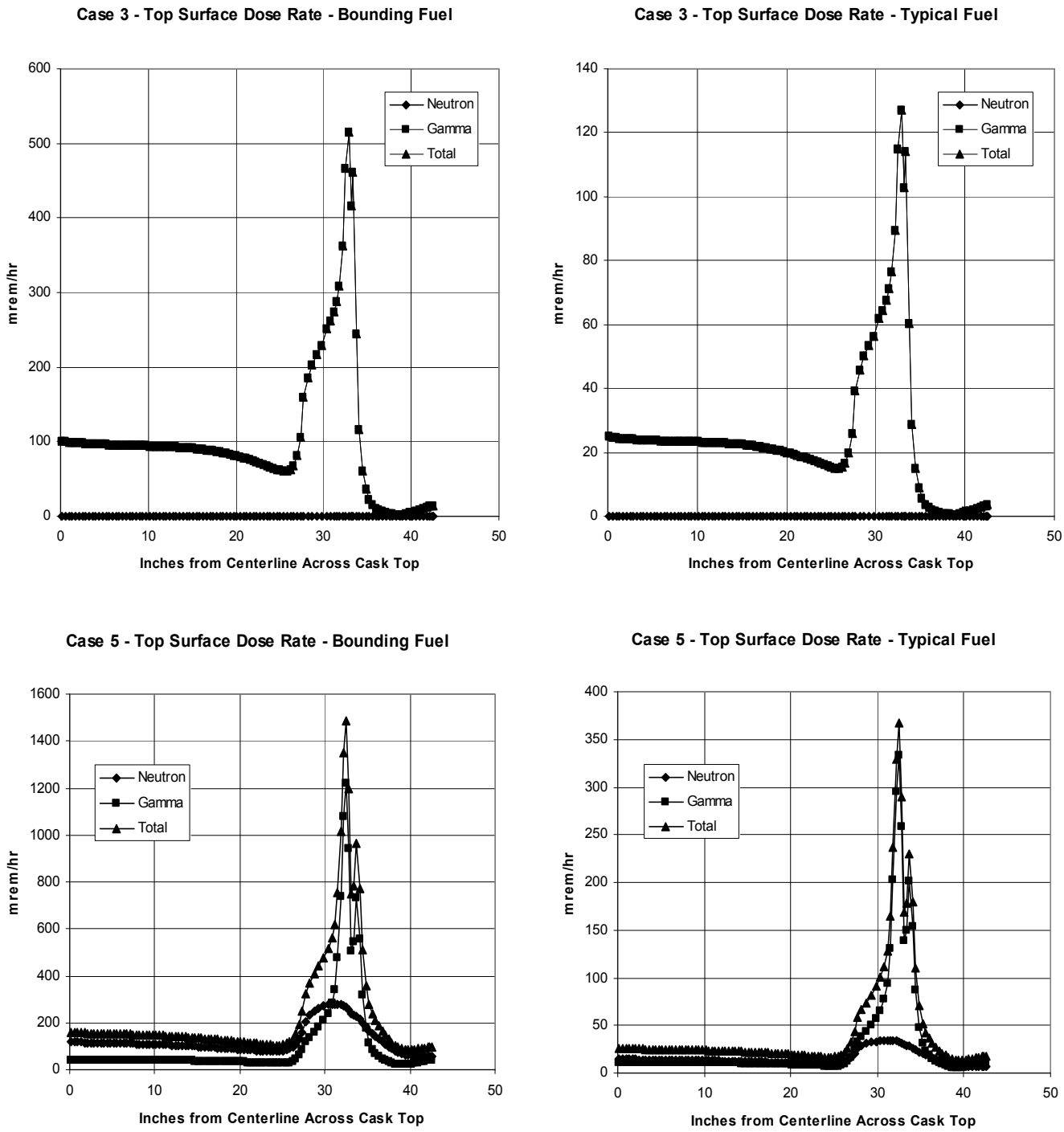

Figure 5.4-6 - Canister Top Dose Rates (Closure Plate Welding Configurations)

5.5 Supplemental Data

5.5.1 Flux to Dose Conversion Factors

All flux-to-dose conversions are performed using the ANSI/ANS-6.1.1-1977[9] flux to dose conversion factors shown in Table 5.5-1 and Table 5.5-2

[9] "Neutron and Gamma-Ray Flux-to-Dose-Rate Factors," ANSI/ANS-6.1.1-1977, American Nuclear Society (1977).

Table 5.5-1 - Gamma Flux to Dose Rate Conversion Factors

BUGLE93 Group	Energy (MeV)	Factor (rem/hr)/(cm^2/sec)
48	12.000	1.10E-05
49	9.000	8.77E-06
50	7.500	7.66E-06
51	6.500	6.93E-06
52	5.500	6.19E-06
53	4.500	5.42E-06
54	3.500	4.63E-06
55	2.500	3.72E-06
56	1.750	2.93E-06
57	1.250	2.32E-06
58	0.900	1.83E-06
59	0.750	1.60E-06
60	0.650	1.44E-06
61	0.500	1.15E-06
62	0.300	7.59E-07
63	0.150	3.79E-07
64	0.080	2.61E-07
65	0.045	3.17E-07
66	0.025	8.01E-07
67	0.015	1.95E-06

Table 5.5-2 - Neutron Flux to Dose Rate Conversion Factors

BUGLE Group	Energy (MeV)	Factor (rem/hr)/(cm^2/sec)	BUGLE Group	Energy (MeV)	Factor (rem/hr)/(cm^2/sec)
1	1.576E+01	3.67E-06	25	2.402E-01	8.14E-05
2	1.320E+01	4.08E-06	26	1.471E-01	9.74E-05
3	1.111E+01	4.36E-06	27	8.924E-02	1.08E-04
4	9.304E+00	4.51E-06	28	5.412E-02	1.16E-04
5	8.008E+00	4.58E-06	29	3.635E-02	1.26E-04
6	6.737E+00	4.56E-06	30	2.894E-02	1.30E-04
7	5.516E+00	4.43E-06	31	2.512E-02	1.29E-04
8	4.322E+00	4.25E-06	32	2.303E-02	1.27E-04
9	3.345E+00	4.09E-06	33	1.845E-02	1.26E-04
10	2.869E+00	3.95E-06	34	1.107E-02	1.26E-04
11	2.596E+00	3.75E-06	35	5.228E-03	1.25E-04
12	2.416E+00	3.64E-06	36	2.470E-03	1.25E-04
13	2.356E+00	3.57E-06	37	1.019E-03	1.27E-04
14	2.289E+00	3.87E-06	38	3.342E-04	1.31E-04
15	2.076E+00	5.78E-06	39	1.579E-04	1.37E-04
16	1.787E+00	6.87E-06	40	6.928E-05	1.49E-04
17	1.503E+00	7.36E-06	41	2.397E-05	1.54E-04
18	1.178E+00	8.22E-06	42	7.860E-06	1.48E-04
19	9.117E-01	9.83E-06	43	3.450E-06	1.47E-04
20	7.818E-01	1.34E-05	44	1.366E-06	1.47E-04
21	6.754E-01	1.99E-05	45	6.452E-07	1.64E-04
22	5.530E-01	3.08E-05	46	2.570E-07	1.96E-04
23	4.334E-01	4.78E-05	47	5.001E-08	2.14E-04
24	3.330E-01	6.42E-05			

5.5.2 Computer Code Descriptions

5.5.2.1 ORIGEN2.1

ORIGEN is a computer code system for calculating the buildup, decay, and processing of radioactive materials. ORIGEN2.1 is a revised version of ORIGEN and incorporates updates of the reactor models, cross sections, fission product yields, decay data, and decay photon data, as well as the source code. ORIGEN2.1[10] replaces ORIGEN and includes additional libraries for standard and extended-burnup PWR and BWR fuel assembly calculations, which are documented in ORNL/TM-11018. ORIGEN2.1 was first released in August 1991. The PC executable version was recreated in the June 1996 update to be compatible with Windows 95.

ORIGEN uses a matrix exponential method to solve a large system of coupled, linear, first-order ordinary differential equations with constant coefficients.

ORIGEN2.1 is variably dimensioned to allow the user to tailor the size of the executable module to the problem size and/or the available computer space. Dimensioned arrays for V2.1 are set large enough to handle almost any size problem, using virtual memory capabilities available on most mainframe and 386/486-based PCs. The user is provided with much of the framework necessary to put some of the arrays to several different uses, call for the subroutines that perform the desired operations, and provide a mechanism to execute multiple ORIGEN2.1 problems with a single job.

5.5.2.2 DORT

DORT[11] calculates the flux or fluence of particles due to particles incident upon the system from extraneous sources or generated internally as a result of interaction with the system. DORT is used in one- or two-dimensional geometric systems. The principle application is to the deep-penetration transport of neutrons and photons. Certain reactor eigenvalue problems can also be solved. Numerous printed edits of the results are available, and results can be transferred to output files for subsequent analysis.

The Boltzmann transport equation is solved using the method of discrete ordinates to treat the directional variable and finite-difference methods to treat spatial variables. Energy dependence is treated using a multi-group formulation. Time dependence is not treated. Starting in one corner of a mesh, at the highest energy, and with starting guesses for implicit sources, boundary conditions and recursion relationships are used to sweep into the mesh for each discrete direction independently. Integral quantities such as scalar flux are obtained from weighted sums over the directional results. The calculation then proceeds to lower energy groups, one at a time.

Iterations are used to resolve implicitness caused by scattering between directions within a single energy group, by scattering from an energy group to another group previously calculated, by fission, and by certain boundary conditions. Methods are available to accelerate convergence.

---

[10] *ORIGEN2.1: Isotope Generation and Depletion Code Matrix Exponential Method*, RSICC Code Package CCC-371, Radiation Shielding Information Code Center, Oak Ridge, Tennessee.

[11] *TORT-DORT-PC: Two- and Three-Dimensional Discrete Ordinates Transport, Version 2.7.3*, RSICC Code Package CCC-543, Radiation Shielding Information Code Center, Oak Ridge, Tennessee.

Anisotropic scattering is represented by a Legendre expansion of arbitrary order, and methods are available to mitigate the effect of negative scattering estimates resulting from finite truncation of the expansion.

Direction sets can be biased, concentrating work into directions of particular interest. Fixed sources can be specified at either external or internal mesh boundaries, or distributed within mesh cells.

A new multi-group cross-section library based on ENDF/B-VI data has been incorporated and tested for light water reactor shielding and reactor pressure vessel dosimetry applications. The broad-group library, designated BUGLE-93,[12] is intended to replace the BUGLE-80 and SAILOR libraries, which are both based on ENDF/B-IV data. The processing methodology for BUGLE-93 is consistent with ANSI/ANS 6.1.2, since the ENDF data were first processed into a fine-group, pseudo-problem-independent format and then collapsed into the final broadgroup format. An extensive integral data testing effort was performed to qualify the data and to assess its impact on LWR shielding applications. In general, results using the new data show significant improvements relative to earlier ENDF data.

BUGLE-93 contains 120 nuclides which are processed as infinitely dilute and collapsed using an LWR concrete shield spectrum. Additionally, it contains 105 nuclides which are energy self-shielded and collapsed using LWR-specific material compositions and flux spectra. Nuclides with $Z < 30$ (hydrogen through copper) are given in a P7 Legendre expansion while P5 expansion is available for all other nuclides. Several dosimetry and standard response functions are included with the library along with kerma factors for all nuclides. The library is collapsed from the VITAMIN-B6 fine-group library using the AMPX-77 processing code system. VITAMIN-B6 is derived from ENDF/B-VI nuclear data, except for two nuclides (Sn obtained from LENDL and Zirc2 obtained from ENDF/B-IV). The responses and kerma factors are also derived primarily from ENDF/B-VI.5.

DORT has been extensively benchmarked against measured data and other shielding codes for deep penetration shielding problems.[13,14,15,16]

---

[12] *BUGLE-93: Coupled 47 Neutron, 20 Gamma-Ray Group Cross Section Library Derived from ENDF/B-VI for LWR Shielding and Pressure Vessel Dosimetry Applications*, RSICC Data Library DLC-175, Radiation Shielding Information Code Center, Oak Ridge, Tennessee.

[13] Broadhead, B.L., et al. *Evaluation of Shielding Analysis Methods in Spent Fuel Cask Environments*, EPRI TR-104329, May 1995.

[14] Childs, R.L. *The FALSTF Last-Flight Computer Program*, ANS Proceedings 1996 Topical Meeting on Radiation Protection and Shielding, No. Falmouth, Massachusetts, April 21-25, 1996.

[15] Remec, I. and Kam, F.B.K., *H.B. Robinson-2 Pressure Vessel Benchmark*, NUREG/CR-6453, February 1998.

[16] Remec, I. and Kam, F.B.K, *Pool Critical Assembly Pressure Vessel Facility Benchmark*, NUREG/CR-6454, July 1997.

5.5.2.3 MCNP4B

MCNP[17] is a general-purpose, continuous-energy, generalized geometry, time-dependent, coupled neutron-photon-electron Monte Carlo transport code system. MCNP treats an arbitrary three-dimensional configuration of materials in geometric cells bounded by first- and second-degree surfaces and some special fourth-degree surfaces. Pointwise continuous-energy cross section data are used,[18] although multi-group data may also be used. Fixed-source adjoint calculations may be made with the multi-group data option. For neutrons, all reactions in a particular cross-section evaluation are accounted for. Both free gas and S (alpha, beta) thermal treatments are used. Criticality sources as well as fixed and surface sources are available. For photons, the code takes account of incoherent and coherent scattering with and without electron binding effects, the possibility of fluorescent emission following photoelectric absorption, and absorption in pair production with local emission of annihilation radiation. A very general source and tally structure is available. The tallies have extensive statistical analysis of convergence. Rapid convergence is enabled by a wide variety of variance reduction methods. Energy ranges are 0-60 MeV for neutrons (data generally only available up to 20 MeV) and 1 keV - 1 GeV for photons and electrons.

MCNP has been extensively benchmarked against measured data and other shielding codes for deep penetration shielding problems.[19,20,21,22]

5.5.2.4 Automated Calculation Program

ADSORB is an Energy*Solutions* proprietary auxiliary routine that automates production of fuel cooling tables for FuelSolutions™ Storage System using the following input:

- Prepared files containing gamma, neutron, and heat generation per MTIHM as a function of cooling time and enrichment.
- A user input file containing fuel type, MTIHM per assembly, number of assemblies per canister, maximum heat load per canister, the axial peaking factor, adjoint fluxes, and the limiting dose rate corresponding to the adjoint fluxes.

For every cell in the fuel cooling table, ADSORB calculates the minimum required cooling time using the following algorithm:

1. Calculate the canister heat load and storage cask dose rate for an initial cooling time.

---

[17] *MCNP4B: Monte Carlo N-Particle Transport Code System*, RSICC Code Package CCC-660, Radiation Shielding Information Code Center, Oak Ridge, Tennessee.

[18] *MCNPXS: Standard Neutron, Photon, and Electron Data Libraries for MCNP4B*, RSICC Data Library DLC-189, Radiation Shielding Information Code Center, Oak Ridge, Tennessee.

[19] DE92-004710, *MCNP Neutron Benchmark Problems*, Los Alamos National Laboratory, November 1991.

[20] LA12196, *MCNP Photon Benchmark Problems*, Los Alamos National Laboratory, September 1991.

[21] C.V. Parks, et al, *Assessment of Shielding Analysis Methods, Codes, and Data for Spent Fuel Storage and Transportation Applications*, ORNL/CSD/TM-246, Oak Ridge National Laboratory, July 1988.

[22] LA12885, *MCNP ENDF/B-VI Validation - Infinite Media Comparisons*, Los Alamos National Laboratory, December 1994.

2. Increase the cooling time until both heat and dose constraints are met.
3. Report calculated heat and dose, whether heat or dose is limiting, and minimum required cooling time.

ADSORB does not perform nuclear transport or source term calculations. The ADSORB results for any combination of burnup and enrichment may be recreated or verified by hand from the program inputs and data files.

The output file prepared by ADSORB includes the fuel cooling table, any error notices generated during the run, QA information, and backup information such as the calculated gamma dose, neutron dose, and canister heat load for each cell in the fuel cooling table.

5.5.3 Calculation of Assembly Hardware Gamma Source Strengths

As discussed in Section 5.2.2.2 of this FSAR, an additional gamma source strength is added to the fuel zone gamma source strength to account for activated assembly hardware. This additional gamma source strength is applied in both the cooling table calculations and in the forward shielding calculations. This additional fuel zone gamma source is determined as a percentage of the total fuel gamma source. The resulting gamma source strength is added to the 1.0-1.5 MeV gamma energy group. The assembly hardware gamma source strength is almost entirely due to the decay of ^{60}Co, which produces gammas with an energy between 1.0 and 1.5 MeV. The assembly hardware gamma source strength percentage (of the total fuel gamma source strength) varies as a function of burnup, enrichment, cooling time, and the quantity of cobalt in the assembly fuel zone. The calculation of this source strength percentage is discussed in this section.

The level of fuel zone cobalt activity is calculated for several burnup levels using the ORIGEN-2.1 code, the same code that is used to calculate the per-MTIHM of fuel gamma source strengths. For each burnup level, the code calculates the curies of ^{60}Co generated per gram of cobalt present in the assembly fuel zone. This is done by modeling an assembly with 1.0 grams of cobalt in the core (fuel) region. The code then outputs the ^{60}Co activity. The code outputs this ^{60}Co activity at assembly discharge (i.e., at a cooling time of zero). The ^{60}Co activity level at other cooling times is determined simply by decaying the discharge activity levels using the ^{60}Co half-life of 5.27 years.

For a given burnup level, a lower initial enrichment level causes the level of ^{60}Co activation to increase. This is because a greater neutron total fluence is required to produce the same level of burnup in fuel with a lower enrichment. Thus, since the assembly hardware is exposed to a larger fluence, a greater level of activation results. For this reason, the core region ^{60}Co activity levels calculated for each burnup level are based upon conservative lower bound enrichment levels.

At each burnup level, the fuel zone ^{60}Co activity level (per gram of cobalt) is determined for two different enrichment levels. The first enrichment level is 1.5% (for every burnup level). This is the lowest enrichment level shown in the FuelSolutions™ canister cooling tables. For many burnup levels, this initial enrichment level is unrealistically low. Thus, assuming an initial enrichment of 1.5% for the higher burnup levels would yield unrealistically high cobalt activation levels. Therefore, a minimum “realistic” enrichment level is determined for each burnup level. The minimum realistic enrichment level for each burnup level is shown in

Table 5.5-3. The second enrichment level studied, for each burnup level, is the minimum "realistic" enrichment level shown for that burnup level in Table 5.5-3.

The fuel zone ^{60}Co activity levels, per gram of cobalt present, are shown as a function of burnup in Table 5.5-4. Results are shown for PWR and BWR fuel. For each burnup level, results are presented for two enrichment levels, 1.5% and the minimum "realistic" enrichment level for the burnup level in question. Table 5.5-4 lists the enrichment level that each presented cobalt activation level is based upon. The minimum realistic enrichment levels assumed for each burnup level are the same for PWR and BWR fuel. The presented values correspond to assembly discharge.

The assembly discharge ^{60}Co activity levels (per gram of assembly fuel zone cobalt) shown in Table 5.5-4 are decayed based upon a 5.27 year half-life to yield ^{60}Co activity level (per gram of cobalt) at other cooling times. The resulting per gram ^{60}Co activity levels are multiplied by the grams of cobalt present in the assembly fuel zone to yield total fuel zone assembly hardware ^{60}Co activity levels as a function of burnup and cooling time. For each assembly type, PWR and BWR, two sets of such activity levels are calculated, one for the 1.5% enrichment case, and one for the "realistic" enrichment case. Thus, a total of four sets of burnup and cooling time dependent ^{60}Co activity levels are generated. These ^{60}Co activity levels are multiplied by a factor of 7.4×10^{10} to convert them into assembly hardware gamma source strengths, in gammas/assembly-sec. There are 3.7×10^{10} atomic decays per curie, and the decay of a ^{60}Co atom yields two gammas.

The generic decay library (calculated using ORIGEN-2.1) gives the per-MTIHM fuel gamma source strengths for PWR and BWR fuel as a function of burnup, enrichment, and cooling time (see Section 5.2.2 of this FSAR). These per-MTIHM source strengths are multiplied by the design basis PWR and BWR assembly uranium loadings of 0.471 MTU/assembly and 0.197 MTU/assembly, respectively, to yield total per assembly fuel gamma source strengths.

For each burnup and cooling time combination, the assembly hardware gamma source strength is divided by the total fuel gamma source strength (both in units of gammas/assembly-sec) to yield assembly hardware gamma source strength percentages. This process is performed for each of the four sets of data (i.e., for PWR and BWR fuel), and for the 1.5% and "realistic" enrichment cases. The resulting assembly hardware gamma source strength percentages are presented for each of the four cases in Table 5.5-5 through Table 5.5-8. The PWR source strength percentages are based upon a bounding PWR assembly core region cobalt quantity of 50 grams/assembly. The BWR source strength percentages are based upon a bounding BWR assembly core region cobalt quantity of 4 grams/assembly.

As discussed above, the BWR assembly hardware gamma source strengths are calculated based on a core region cobalt quantity of 4 grams/assembly, which is bounding for standard U.S. BWR assemblies. The fuel gamma source strengths are calculated based on an assembly uranium loading of 0.197 MTU/assembly, which is bounding for U.S. BWR fuel assemblies. Thus, the assembly hardware gamma source percentages are calculated for standard U.S. BWR fuel. These percentages, however, are bounding for BRP fuel assemblies. The ^{60}Co activity per gram of cobalt present is not expected to differ between BWR fuel and BRP fuel (since BRP is a boiling water reactor). Thus, the ratio of assembly hardware gamma source strength over fuel gamma source strength is proportional to the ratio of assembly core region cobalt over the assembly uranium loading. The maximum BRP assembly uranium loading is 0.1421 MTU, as compared to

the BWR value of 0.197 MTU. Scaling the bounding BWR assembly core region cobalt quantity of 4 grams/assembly down by a factor of 0.1421/0.197 yields a maximum BRP assembly core region cobalt quantity of 2.9 grams/assembly. This core region cobalt quantity is bounding for all BRP fuel. For this reason, the assembly hardware gamma source strength percentages calculated for BWR fuel in this FSAR section are applicable for BRP fuel and the W74 canister.

As discussed in Section 5.2.1 of this FSAR, the cooling tables are generated using the ADSORB code. To account for assembly hardware activation, ADSORB is instructed to multiply the total fuel gamma source strength, for each given cooling table state point, by a certain fraction and add the result to the 1.0-1.5 MeV gamma energy group. In theory, one could specify (in ADSORB) a different assembly hardware source strength fraction to be used for every burnup and cooling time combination. The data shown in Table 5.5-5 through Table 5.5-8 would then be entered into the ADSORB input file. This would be rather cumbersome, however, so the entered source strength fraction data is simplified as described below.

Two linear (one variable) functions, F(T) and F(B), which estimate the percentages shown in Table 5.5-5 through Table 5.5-8 are determined through a trial and error process. F(T) is a cooling time dependent assembly hardware source strength percentage. F(B) is a burnup-dependent adjustment factor to F(T). Thus, at each given combination of burnup and cooling time, F(T) and F(B) are multiplied to yield the assembly hardware gamma source strength percentage. The cooling time dependent source strength fractions [F(T)] are presented in Table 5.5-9. The corresponding burnup dependent adjustment factors [F(B)] are presented in Table 5.5-10. Different F(T) and F(B) functions apply for PWR and BWR fuel, and for the 1.5% and "realistic" enrichment cases. Data is presented for all four cases in both Table 5.5-9 and Table 5.5-10.

The F(T) and F(B) functions are determined so that they are conservative for all burnup and enrichment combinations. For any burnup and enrichment combination, if the F(T) value shown in Table 5.5-9 is multiplied by the F(B) value shown in Table 5.5-10, the resulting source strength percentage is equal to or higher than the actual percentage shown in Table 5.5-5 through Table 5.5-8. This is true for PWR and BWR fuel, and for the 1.5% and the minimum "realistic" enrichment cases. Thus, the "F(T) x F(B)" approximation yields bounding assembly hardware gamma source strength percentages.

The data presented in Table 5.5-9 and Table 5.5-10 is entered into the ADSORB input. Then, based upon the burnup and cooling time of a given state point, ADSORB multiplies the appropriate F(T) and F(B) values to determine the assembly hardware gamma source strength percentage. This is multiplied by the total fuel gamma source strength for that state point to yield a total assembly core region hardware gamma source strength, which is then added to the 1.0-1.5 MeV gamma energy group. For burnup levels between the values shown in Table 5.5-10, the higher F(B) value (which corresponds to the lower burnup level) is conservatively assumed.

Which set of F(T) and F(B) values is entered into the ADSORB code depends on whether a PWR or BWR fuel cooling table calculation is being performed, and whether or not the 1.5% enrichment case or the "realistic" enrichment case is being considered. Two sets of cooling table calculations are actually performed for each cooling table shown in the PWR and BWR canister FSARs. A full cooling table is generated, using ADSORB, for the 1.5% enrichment case and for the minimum "realistic" enrichment case. These two cooling tables are then spliced together to form the final cooling tables shown in the FuelSolutions™ Canister Storage FSARs. For

enrichment levels equal to or higher than the minimum "realistic" enrichment level given in Table 5.5-3 for a given burnup level, the "realistic" case cooling table values are placed in the final cooling table. For enrichment levels lower than the minimum "realistic" enrichment level, the values from the 1.5% enriched case cooling table are inserted into the final cooling table.

Thus, for every burnup and enrichment combination listed in the cooling tables, the assembly core region hardware source strength percentage that is assumed is conservatively based upon an initial enrichment value that is equal to or less than the enrichment value of the cooling table state point in question. This approach ensures conservatism, with respect to assembly hardware activation, for every cooling table state point while avoiding excessive conservatism for most of the state points shown in the cooling table.

The F(T) values shown in Table 5.5-9 are based upon a bounding PWR assembly core region cobalt quantity of 50 grams/assembly, and a bounding BWR assembly core region cobalt quantity of 4 grams/assembly. The level of core region cobalt activation is directly proportional to the core region cobalt quantity. Cooling table calculations may be performed for different specified (maximum) core region cobalt quantities. The maximum assembly core region cobalt quantity is a specified parameter in the fuel cooling tables given in the FuelSolutions™ Canister Storage FSARs. To perform cooling table calculations for a different specified assembly core region cobalt quantity, the F(T) values shown in Table 5.5-9 are scaled from 50 grams to whatever cobalt quantity is being considered. The burnup dependent adjustment factors, F(B), do not vary with assembly core region cobalt quantity.

This approach to assembly core region hardware activation effectively treats the presence of inserted control components. A maximum allowable assembly fuel zone cobalt quantity is specified for a given cooling table. This limit must be met by an assembly, if it is to use that cooling table. Any core region cobalt present in an inserted control component must be included in the total fuel zone cobalt quantity calculation. This is discussed in more detail in Chapter 5 of the FuelSolutions™ Canister Storage FSARs. This approach effectively assumes that the control component materials have been exposed to a similar neutron fluence to that seen by the assembly (i.e., the amount of ^{60}Co generated per gram of cobalt present is assumed to be similar for assembly hardware and control component hardware). Thus, the analyses assume that the exposure (or burnup) of the inserted control components is no higher than that of the host assembly.

The source strengths for the forward shielding calculations (discussed in Section 5.2.2 of this FSAR) are based upon 36 GWd/MTU, 4.5% enriched, 4-year cooled PWR fuel and 36 GWd/MTU, 3.5% enriched, 10-year cooled PWR fuel, for the bounding and typical cases, respectively. As shown in Table 5.5-3, the minimum "realistic" enrichment for a burnup of 36 GWd/MTU is less than 3.0%. Thus, the assembly core region hardware gamma source strength percentages calculated for the minimum "realistic" enrichment PWR case apply for both the bounding and typical fuel parameters assumed for the forward shielding calculations. The assembly hardware gamma source strength percentage assumed in the forward shielding calculations is based upon a PWR assembly core region cobalt quantity of 11 grams/assembly.

Assuming an enrichment level that is above the minimum "realistic" value shown in Table 5.5-3, and a core region cobalt quantity of 11 grams/assembly, is actually conservative for the forward calculations. The effect of higher fuel zone gamma source strengths due to higher fuel zone hardware activation levels shows up in the minimum required cooling times shown in the

cooling tables. The fuel zone gamma source strength is roughly the same for all radiologically limited state points shown in the cooling table. Realistic enrichment and low cobalt quantity case state points would have lower levels of core region cobalt activation, which lead to lower required cooling times. These lower cooling times yield higher neutron source strengths and assembly nozzle source strengths. Thus, for cases with lower fuel zone assembly hardware activation, the neutron source and the assembly end gamma sources are higher relative to the fuel zone gamma source. This maximizes the cask end dose rates and cask neutron dose rates for a given radiologically limited point in the cooling table. It is therefore a conservative assumption to make for the forward shielding calculations.

Table 5.5-9 lists an assembly core region hardware gamma source strength percentage [F(T)] of 3.56% for 4-year cooled PWR fuel and 3.85% for 10-year cooled PWR fuel. These values correspond to 50 grams of core region cobalt per assembly. Scaling these percentages to an 11 gram/assembly cobalt quantity yields 4- and 10-year percentages of 0.78% and 0.85%, respectively. For 36 GWd/MTU fuel, the burnup adjustment factor [F(B)] is 1.387 (the value shown for 35 GWd/MTU in Table 5.5-9 is conservatively assumed). Both values correspond to the minimum "realistic" enrichment case, as discussed earlier. Therefore, the final assembly hardware activation gamma source strength percentages assumed for the forward shielding calculations are 1.08% and 1.18% for the bounding and typical cases, respectively. The total fuel gamma source strengths for these cases are multiplied by these percentages to give assembly hardware gamma source strengths, which are then added to the 1.0-1.5 MeV energy group of the overall fuel zone gamma source strength.

As discussed earlier, the assembly discharge fuel zone cobalt activation levels shown in Table 5.5-4 can be decayed, using a 5.27 year ^{60}Co half-life, to yield fuel zone cobalt activation level as a function of burnup and cooling time. With this data, the fuel zone cobalt activation level can be determined for every point in the W21 canister cooling table. This data may be surveyed to identify the maximum level of fuel zone ^{60}Co activity (per gram of cobalt present) that occurs for any allowable fuel payload for the FuelSolutions™ W21 canister. This process is used, as described in Section 5.2.2.2 of this FSAR, to determine the maximum possible assembly non-fuel region ^{60}Co activity levels for any fuel that may be loaded into the FuelSolutions™ W21 canister. These bounding assembly non-fuel region ^{60}Co activity levels are then assumed in the bounding case forward shielding calculations.

Table 5.5-3 - Minimum "Realistic" Enrichment vs. Burnup Level

Burnup Level (GWd/MTU)	Minimum "Realistic" Enrichment
15	2.0 %
20	2.0 %
25	2.0 %
30	2.5 %
35	2.5 %
40	3.0 %
45	3.0 %
50	3.5 %
60	4.0 %

Table 5.5-4 - Core Region ^{60}Co Activation Levels for PWR and BWR Fuel at Assembly Discharge (t=0)

(Ci of ^{60}Co per gram of cobalt present)

Burnup Level (GWd/MTU)	Initial Enrich.	^{60}Co Activation Level		Initial Enrich.	^{60}Co Activation Level	
		PWR	BWR		PWR	BWR
15	1.5 %	118.6	114.5	2.0 %	103.4	100.2
20	1.5 %	151.1	143.4	2.0 %	133.9	127.5
25	1.5 %	181.6	169.5	2.0 %	163.2	152.9
30	1.5 %	210.9	194.0	2.5 %	174.0	161.3
35	1.5 %	238.3	203.9	2.5 %	200.9	176.1
40	1.5 %	264.0	221.6	3.0 %	209.1	181.6
45	1.5 %	268.8	237.6	3.0 %	222.6	199.3
50	1.5 %	288.4	251.2	3.5 %	228.9	202.9
60	1.5 %	323.4	274.0	4.0 %	255.3	221.6

Table 5.5-5 - PWR Assembly Core Region Hardware Gamma Source Strength Percentage (vs. total fuel source strength) 1.5 % Enrichment Case - 50 grams/assembly of Core Region Cobalt

Burnup (GWd/MTU)	Initial Enrich	Assembly Cooling Time, years											
		Discharge	1	2	4	6	8	10	12	15	20	50	80
15	1.5%	0.01	1.51	2.82	6.17	8.42	8.46	7.47	6.28	4.68	2.77	0.11	0.00
20	1.5%	0.01	1.55	2.79	5.86	7.92	8.02	7.15	6.05	4.53	2.70	0.10	0.00
25	1.5%	0.01	1.59	2.77	5.63	7.52	7.65	6.87	5.85	4.41	2.64	0.10	0.00
30	1.5%	0.01	1.62	2.76	5.45	7.21	7.36	6.66	5.70	4.31	2.59	0.10	0.00
35	1.5%	0.01	1.66	2.76	5.29	6.93	7.10	6.45	5.54	4.21	2.54	0.10	0.00
40	1.5%	0.02	1.69	2.76	5.16	6.69	6.86	6.26	5.40	4.12	2.49	0.10	0.00
45	1.5%	0.02	1.59	2.55	4.65	5.98	6.16	5.65	4.89	3.75	2.27	0.09	0.00
50	1.5%	0.02	1.60	2.54	4.53	5.78	5.95	5.47	4.75	3.65	2.22	0.09	0.00
60	1.5%	0.02	1.62	2.51	4.33	5.44	5.59	5.16	4.49	3.46	2.11	0.09	0.00

Table 5.5-6 - PWR Assembly Core Region Hardware Gamma Source Strength Percentage (vs. total fuel source strength) Minimum "Realistic" Enrichments Case - 50 grams/assembly of Core Region Cobalt

Burnup (GWd/MTU)	Initial Enrich	Assembly Cooling Time, years											
		Discharge	1	2	4	6	8	10	12	15	20	50	80
15	2.0%	0.01	1.37	2.58	5.59	7.44	7.33	6.41	5.36	3.98	2.35	0.09	0.00
20	2.0%	0.01	1.43	2.59	5.39	7.11	7.06	6.23	5.25	3.91	2.32	0.09	0.00
25	2.0%	0.01	1.48	2.60	5.23	6.84	6.84	6.08	5.15	3.86	2.30	0.09	0.00
30	2.5%	0.01	1.43	2.46	4.76	6.06	6.01	5.34	4.53	3.40	2.03	0.08	0.00
35	2.5%	0.01	1.49	2.49	4.68	5.93	5.91	5.29	4.51	3.40	2.04	0.08	0.00
40	3.0%	0.01	1.45	2.39	4.35	5.39	5.35	4.78	4.07	3.07	1.84	0.07	0.00
45	3.0%	0.01	1.41	2.27	4.04	5.01	5.01	4.52	3.87	2.94	1.77	0.07	0.00
50	3.5%	0.01	1.38	2.20	3.80	4.64	4.61	4.15	3.56	2.70	1.63	0.06	0.00
60	4.0%	0.02	1.39	2.14	3.56	4.29	4.26	3.85	3.31	2.52	1.53	0.06	0.00

Table 5.5-7 - BWR Assembly Core Region Hardware Gamma Source Strength Percentage (vs. total fuel source strength) 1.5% Enrichment Case - 4 grams/assembly of Core Region Cobalt

Burnup (GWd/MTU)	Initial Enrich	Assembly Cooling Time, years											
		Discharge	1	2	4	6	8	10	12	15	20	50	80
15	1.5%	0.00	0.34	0.61	1.24	1.60	1.58	1.39	1.17	0.87	0.51	0.02	0.00
20	1.5%	0.00	0.36	0.61	1.18	1.50	1.48	1.31	1.11	0.83	0.49	0.02	0.00
25	1.5%	0.00	0.37	0.61	1.13	1.42	1.40	1.25	1.06	0.80	0.48	0.02	0.00
30	1.5%	0.00	0.38	0.61	1.09	1.35	1.34	1.20	1.02	0.77	0.46	0.02	0.00
35	1.5%	0.00	0.36	0.57	0.99	1.21	1.20	1.08	0.93	0.70	0.42	0.02	0.00
40	1.5%	0.00	0.37	0.56	0.95	1.15	1.14	1.03	0.89	0.67	0.41	0.02	0.00
45	1.5%	0.00	0.37	0.56	0.91	1.10	1.09	0.99	0.85	0.65	0.39	0.02	0.00
50	1.5%	0.00	0.37	0.55	0.88	1.05	1.05	0.95	0.82	0.63	0.38	0.02	0.00
60	1.5%	0.01	0.37	0.53	0.83	0.97	0.97	0.88	0.76	0.58	0.35	0.01	0.00

Table 5.5-8 - BWR Assembly Core Region Hardware Gamma Source Strength Percentage (vs. total fuel source strength) Minimum "Realistic" Enrichments Case - 4 grams/assembly of Core Region Cobalt

Burnup (GWd/MTU)	Initial Enrich	Assembly Cooling Time, years											
		Discharge	1	2	4	6	8	10	12	15	20	50	80
15	2.0%	0.00	0.31	0.56	1.13	1.42	1.38	1.20	1.00	0.74	0.44	0.02	0.00
20	2.0%	0.00	0.33	0.57	1.09	1.35	1.31	1.15	0.97	0.72	0.43	0.02	0.00
25	2.0%	0.00	0.35	0.57	1.05	1.29	1.26	1.11	0.94	0.70	0.42	0.02	0.00
30	2.5%	0.00	0.34	0.55	0.95	1.14	1.10	0.97	0.82	0.61	0.37	0.01	0.00
35	2.5%	0.00	0.33	0.53	0.89	1.05	1.03	0.91	0.77	0.58	0.35	0.01	0.00
40	3.0%	0.00	0.32	0.50	0.81	0.95	0.92	0.82	0.69	0.52	0.31	0.01	0.00
45	3.0%	0.00	0.33	0.50	0.79	0.92	0.90	0.80	0.68	0.52	0.31	0.01	0.00
50	3.5%	0.00	0.32	0.48	0.74	0.85	0.82	0.73	0.62	0.47	0.28	0.01	0.00
60	4.0%	0.00	0.32	0.46	0.68	0.77	0.75	0.67	0.57	0.43	0.26	0.01	0.00

Table 5.5-9 - Assembly Hardware ^{60}Co Gamma Source Strength Percentage Function - "F(T)"

Cooling Time (years)	1.5% Enrichment Case		Minimum "Realistic" Enrichment Case	
	PWR(1)	BWR(2)	PWR(1)	BWR(2)
0	0.02	0.01	0.02	0.00
1	1.62	0.37	1.39	0.32
2	2.51	0.53	2.14	0.46
4	4.33	0.83	3.56	0.68
6	5.44	0.97	4.29	0.77
8	5.59	0.97	4.26	0.75
10	5.16	0.88	3.85	0.67
12	4.49	0.76	3.31	0.57
15	3.46	0.58	2.52	0.43
20	2.11	0.35	1.53	0.26
50	0.09	0.01	0.06	0.01
80	0.00	0.00	0.00	0.00

Note:

(1) Presented PWR "F(T)" values are based upon a bounding fuel zone cobalt quantity of 50 grams/assembly.

(2) BWR values are based upon a bounding fuel zone cobalt quantity of 4 grams/assembly.

Table 5.5-10 - Assembly Hardware Gamma Source Strength Percentage Burnup Adjustment Factors - "F(B)"

Burnup Level (GWd/MTU)	Initial Enrichment	Adjustment Factor		Initial Enrichment	Adjustment Factor	
		PWR	BWR		PWR	BWR
15	1.5 %	1.548	1.650	2.0 %	1.736	1.838
20	1.5 %	1.456	1.543	2.0 %	1.659	1.750
25	1.5 %	1.383	1.456	2.0 %	1.604	1.677
30	1.5 %	1.325	1.385	2.5 %	1.415	1.466
35	1.5 %	1.274	1.243	2.5 %	1.387	1.367
40	1.5 %	1.231	1.181	3.0 %	1.259	1.226
45	1.5 %	1.101	1.130	3.0 %	1.175	1.197
50	1.5 %	1.064	1.083	3.5 %	1.082	1.095
60	1.5 %	1.000	1.000	4.0 %	1.000	1.000

5.5.4 Summary of DORT Adjoint Shielding Calculation Methodology

The calculation of neutron and photon dose rates at the side surface of the storage cask is based on the application of discrete ordinates adjoint transport analysis. The adjoint function ϕ^* is a measure of the "importance" of a particle (neutron or photon) in contributing to a response of interest at a location of interest. From reactor theory texts,[23] it is noted that:

$$\int S(r,E)\Phi^*(r,E)dVdE = \int \sigma_d(E)\Phi(r,E)dVdE \qquad \text{(Equation 1)}$$

where:

S(r,E) = Particle source at location r and energy E.

Φ*(r,E) = Adjoint importance function at location r and energy E.

σ_d(E) = Energy dependent response function of interest.

Φ(r,E) = Particle flux at location r and energy E.

From Equation 1, it is evident that to determine the response of a given detector to particles of many energies, it is not necessary to perform calculations of the particle flux for each source distribution or energy. A single calculation of the adjoint is sufficient to compute the detector response for any source.

Relative to the application of Equation 1 in r,θ geometry, the particle source is expressed in terms of particles/s-cm; the neutron flux solution is expressed in particles/cm^2-s; and the dose rate response function is expressed in terms of (rem/hr)/(particle/cm^2-s). For the purposes of absolute normalization, in a forward calculation the overall problem normalization is equal to the summation over energy and space of the particle source. Likewise, in an adjoint calculation, the overall problem normalization is equal to the summation over energy of the dose rate response function.

In performing the calculations for the storage cask configuration, a single r,θ adjoint DORT run is performed to compute importance functions relating both primary photon and neutron-induced secondary photon sources to the photon dose rates external to the storage cask. In this case, the total primary photon source includes components due to fission products and actinides contained in the fuel as well as due to activation products generated within the active fuel length of the assembly. The energy-dependent photon dose rate response function used in the transport calculations is provided in the BUGLE-93 group structure in Table 5.5-11.

A second adjoint DORT run is performed to compute importance functions relating the neutron source within the fuel to the neutron dose rates external to the storage cask The energy-dependent neutron dose rate response function is provided in Table 5.5-12.

[23] Bell, G.I., and Glasstone, S., *Nuclear Reactor Theory*, Robert E. Kreiger Publishing Co., 1985.

In regard to the energy-dependent source functions provided in Table 5.5-11 and Table 5.5-12, it should be noted that for the adjoint application, the source is input to DORT according to ascending energy. Therefore, in this case, groups 1 and 20 represent the lowest and highest gamma ray energy groups in the BUGLE-93 library, respectively. Group 21 is the lowest energy neutron group and group 67 represents the highest energy neutron group.

In performing adjoint evaluations on an absolute basis, the overall normalization of the r,θ DORT calculations should be set equal to the summation of the energy-dependent flux to dose rate response functions, thus, preserving an appropriate relative response in each energy group. In this case, the appropriate normalization is XNF = 7.008e-05 (see Table 5.5-11) and XNF = 3.403e-03 (see Table 5.5-12) for the photon and neutron analyses, respectively. However, due to computational limitations of the HP C180 computer, it is necessary to include a large positive scaling factor in the normalization to assure that the deep penetration calculations, especially for low energy particles, can be completed without impacting the overall problem convergence and, hence, the problem solution. Therefore, to satisfy this requirement, a value of XNF = 1.0e+20 is used in both the photon and neutron adjoint analyses.

Because of normalization of the DORT calculations to a high value of 1.0e+20, the output must be re-normalized by the following factors prior to use on an absolute basis:

Photon re-normalization = [7.008e-05]/[1.0e+20] = 7.008e-25

Neutron re-normalization = [3.403e-03]/[1.0e+20] = 3.403e-23

Results of the adjoint transport calculations applicable to the FuelSolutions™ W21 canister in the storage cask are provided in Table 5.5-13 through Table 5.5-15 for the primary photon dose rate, neutron-induced secondary photon dose rates, and neutron dose rates, respectively. In each table, the adjoint functions are provided as a total summed over all fuel locations in the octant. It should be noted that the results represent an integral over the area of all fuel cells and include the impact of symmetrically located cells in the octants not included in the DORT model. The impact of fuel cell symmetry is inherently included in the DORT calculations via the use of reflective boundary conditions at 0° and 45°. The integration over each fuel cell is based on the assumption of a uniform source across each individual spent fuel assembly.

Due to the fact that an assumption of a uniform distribution inspace (i.e., F(r,θ) = 1.0), the spatial integration is performed internal to DORT via the balance table output for the fuel zone. That is, with a uniform spatial distribution of source, the zone integral reverts to an integral of the unweighted adjoint flux over the fuel zone volume. This integration is tabulated as Flux*Volume in the DORT output balance tables. Samples of these balance tables for the photon and neutron solutions are provided as Table 5.5-16 and Table 5.5-17.

The use of the total adjoint listed in Table 5.5-13 through Table 5.5-15 is valid for a uniform canister loading assumption (i.e., all assemblies are the same). The data listed in Table 5.5-13 through Table 5.5-15 are provided in the BUGLE-93 group structure and are normalized to provide energy-dependent importance functions relating the dose rate expressed in mrem/hr to the radiation source expressed in terms of particles per second/cm of the source region. The

adjoint normalization is such that the source/cm must include contributions from all 21 fuel assemblies contained within the canister. The energy group structure of the importance functions listed in Table 5.5-13 through Table 5.5-15 is arranged from high energy to low energy.

The photon and neutron normalization factors are computed as follows:

Photon Norm. = [7.008E-05/1.0E+20]*[1000/1.563E+04]= 4.484E-26

Neutron Norm. = [3.403E-03/1.0E+20]*[1000/1.563E+04]= 2.177E-24

Where 7.008E-05 and 3.403E-03 are the dose rate response function totals from Table 5.5-11 and Table 5.5-12, respectively; 1.0E+20 is the normalization factor input to the adjoint DORT calculations; 1000 is a factor to convert from rem/hr to mrem/hr; and 1.563E+04 represents the cross sectional area of the 21 fuel cells arranged within the FuelSolutions™ W21 canister.

Table 5.5-11 - Photon Dose Rate Response Function Used as Adjoint Source

Group	Energy [MeV]	Response Function [rem/hr]/[p/cm^2-s]
1	0.015	1.95E-06
2	0.025	8.01E-07
3	0.045	3.17E-07
4	0.080	2.61E-07
5	0.150	3.79E-07
6	0.300	7.59E-07
7	0.500	1.15E-06
8	0.650	1.44E-06
9	0.750	1.60E-06
10	0.900	1.83E-06
11	1.250	2.32E-06
12	1.750	2.93E-06
13	2.500	3.72E-06
14	3.500	4.63E-06
15	4.500	5.42E-06
16	5.500	6.19E-06
17	6.500	6.93E-06
18	7.500	7.66E-06
19	9.000	8.77E-06
20	12.000	1.10E-05
21-47	NA	0.00E+00
Total		7.008E-05

Table 5.5-12 - Neutron Dose Rate Response Function Used as Adjoint Source

Group	Energy [MeV]	Resp. Function rem/hr/[n/cm^2-s]	Group	Energy [MeV]	Resp. Function rem/hr/[n/cm^2-s]	Group	Energy [MeV]	Resp. Function rem/hr/[n/cm^2-s]
1-20	NA	0.00E-00	36	2.303E-02	6.87E-06	52	1.787E+00	1.27E-04
21	5.001E-08	3.67E-06	37	2.512E-02	7.36E-06	53	2.076E+00	1.26E-04
22	2.570E-07	4.08E-06	38	2.894E-02	8.22E-06	54	2.289E+00	1.26E-04
23	6.452E-07	4.36E-06	39	3.635E-02	9.83E-06	55	2.356E+00	1.25E-04
24	1.366E-06	4.51E-06	40	5.412E-02	1.34E-05	56	2.416E+00	1.25E-04
25	3.450E-06	4.58E-06	41	8.924E-02	1.99E-05	57	2.596E+00	1.27E-04
26	7.860E-06	4.56E-06	42	1.471E-01	3.08E-05	58	2.869E+00	1.31E-04
27	2.397E-05	4.43E-06	43	2.402E-01	4.78E-05	59	3.345E+00	1.37E-04
28	6.928E-05	4.25E-06	44	3.330E-01	6.42E-05	60	4.322E+00	1.49E-04
29	1.579E-04	4.09E-06	45	4.334E-01	8.14E-05	61	5.516E+00	1.54E-04
30	3.342E-04	3.95E-06	46	5.530E-01	9.74E-05	62	6.737E+00	1.48E-04
31	1.019E-03	3.75E-06	47	6.754E-01	1.08E-04	63	8.008E+00	1.47E-04
32	2.470E-03	3.64E-06	48	7.818E-01	1.16E-04	64	9.304E+00	1.47E-04
33	5.228E-03	3.57E-06	49	9.117E-01	1.26E-04	65	1.111E+01	1.64E-04
34	1.107E-02	3.87E-06	50	1.178E+00	1.30E-04	66	1.320E+01	1.96E-04
35	1.845E-02	5.78E-06	51	1.503E+00	1.29E-04	67	1.576E+01	2.14E-04
						Total		3.403E-03

Table 5.5-13 - Adjoint Functions Relating the Primary Photon Source to Side Surface Dose Rate

Photon Group	[mrem/hr] [p/s-cm]
1	2.354E-09
2	1.886E-09
3	1.538E-09
4	1.144E-09
5	8.378E-10
6	5.066E-10
7	2.313E-10
8	5.559E-11
9	1.012E-11
10	1.412E-12
11	1.103E-13
12	2.355E-14
13	7.571E-15
14	1.344E-15
15	1.430E-17
16	1.421E-20
17	6.420E-21
18	1.794E-21
19	8.595E-22
20	1.493E-21

Table 5.5-14 - Adjoint Functions Relating the Neutron Induced Secondary Photon Source to Side Surface Dose Rate

Neutron Group	[mrem/hr] [n/s-cm]	Neutron Group	[mrem/hr] [n/s-cm]
1	2.562E-08	25	1.096E-08
2	2.282E-08	26	9.730E-09
3	2.055E-08	27	8.299E-09
4	1.946E-08	28	7.142E-09
5	1.849E-08	29	6.246E-09
6	1.745E-08	30	5.926E-09
7	1.725E-08	31	5.985E-09
8	1.623E-08	32	5.571E-09
9	1.603E-08	33	4.800E-09
10	1.642E-08	34	3.785E-09
11	1.603E-08	35	3.060E-09
12	1.620E-08	36	2.595E-09
13	1.655E-08	37	2.096E-09
14	1.560E-08	38	1.542E-09
15	1.487E-08	39	1.331E-09
16	1.459E-08	40	1.156E-09
17	1.444E-08	41	7.898E-10
18	1.449E-08	42	4.996E-10
19	1.465E-08	43	7.101E-10
20	1.446E-08	44	5.349E-10
21	1.413E-08	45	4.094E-10
22	1.302E-08	46	2.750E-10
23	1.198E-08	47	1.439E-10
24	1.162E-08		

Table 5.5-15 - Adjoint Functions Relating the Neutron Source to Side Surface Dose Rate

Neutron Group	[mrem/hr] [n/s-cm]	Neutron Group	[mrem/hr] [n/s-cm]
1	8.289E-08	25	1.702E-11
2	5.899E-08	26	1.227E-11
3	4.585E-08	27	7.628E-12
4	4.497E-08	28	5.185E-12
5	4.378E-08	29	3.814E-12
6	5.024E-08	30	3.478E-12
7	3.200E-08	31	3.522E-12
8	1.554E-08	32	3.077E-12
9	9.210E-09	33	2.322E-12
10	1.033E-08	34	1.449E-12
11	7.993E-09	35	9.158E-13
12	9.594E-09	36	6.037E-13
13	1.220E-08	37	3.745E-13
14	4.537E-09	38	1.609E-13
15	1.068E-09	39	1.041E-13
16	3.932E-10	40	6.448E-13
17	1.851E-10	41	2.610E-14
18	9.179E-11	42	7.273E-15
19	7.497E-11	43	6.979E-15
20	6.559E-11	44	2.448E-15
21	5.646E-11	45	7.632E-16
22	3.359E-11	46	1.927E-16
23	2.271E-11	47	2.538E-18
24	2.051E-11		

Table 5.5-16 - DORT Output for Photon Adjoint Calculation (2 pages)

0 grp.	fsn source	fsn rate	inscatter	slfscat/col	outscatter	absorption	db2 loss	out/in	flux*volume
1	.00000E+00	.00000E+00	.00000E+00	2.67860E-02	5.63092E+06	.00000E+00	.00000E+00	9.99994E-01	3.32889E+04
2	.00000E+00	.00000E+00	4.66125E+02	3.10106E-02	2.31978E+06	.00000E+00	.00000E+00	9.99991E-01	1.91589E+04
3	.00000E+00	.00000E+00	7.83125E+01	7.33030E-02	9.19011E+05	.00000E+00	.00000E+00	9.99993E-01	3.99870E+04
4	00000E+00	.00000E+00	1.04988E+03	1.31946E-01	7.60938E+05	.00000E+00	.00000E+00	9.99985E-01	1.43117E+05
5	.00000E+00	.00000E+00	7.82119E+03	1.07275E-01	1.15736E+06	.00000E+00	.00000E+00	9.99924E-01	3.16758E+05
6	.00000E+00	.00000E+00	3.27298E+04	1.75747E-01	2.88294E+08	.00000E+00	.00000E+00	9.99966E-01	3.18761E+08
7	.00000E+00	.00000E+00	3.33360E+07	1.83961E-01	1.04426E+10	.00000E+00	.00000E+00	1.00003E+00	2.99633E+10
8	.00000E+00	.00000E+00	2.00785E+09	1.04201E-01	4.53560E+10	.00000E+00	.00000E+00	1.00009E+00	1.68758E+11
9	.00000E+00	.00000E+00	6.02195E+09	9.29575E-02	1.21227E+11	.00000E+00	.00000E+00	1.00015E+00	5.24977E+11
10	.00000E+00	.00000E+00	1.41677E+10	1.17601E-01	4.60125E+11	.00000E+00	.00000E+00	1.00026E+00	2.45796E+12
11	.00000E+00	.00000E+00	5.94638E+10	1.57636E-01	4.29277E+12	.00000E+00	.00000E+00	1.00036E+00	3.14766E+13
12	.00000E+00	.00000E+00	8.80146E+11	1.04472E-01	2.64227E+13	.00000E+00	.00000E+00	1.00037E+00	2.25608E+14
13	.00000E+00	.00000E+00	3.80268E+12	9.84881E-02	1.29349E+14	.00000E+00	.00000E+00	1.00039E+00	1.23906E+15
14	.00000E+00	.00000E+00	1.99310E+13	5.75637E-02	5.19765E+14	.00000E+00	.00000E+00	1.00033E+00	5.15591E+15
15	.00000E+00	.00000E+00	5.89716E+13	3.06552E-02	1.14751E+15	.00000E+00	.00000E+00	1.00030E+00	1.12922E+16
16	.00000E+00	.00000E+00	1.04381E+14	2.49357E-02	1.92273E+15	.00000E+00	.00000E+00	1.00028E+00	1.86757E+16
17	.00000E+00	.00000E+00	1.56634E+14	1.50545E-02	2.67756E+15	.00000E+00	.00000E+00	1.00028E+00	2.55094E+16
18	.00000E+00	.00000E+00	2.00650E+14	1.09158E-02	3.68472E+15	.00000E+00	.00000E+00	1.00026E+00	3.42721E+16
19	.00000E+00	.00000E+00	2.19539E+14	1.71408E-02	4.66891E+15	.00000E+00	.00000E+00	1.00026E+00	4.20443E+16
20	.00000E+00	.00000E+00	2.81626E+14	1.04774E-02	6.14194E+15	.00000E+00	.00000E+00	1.00023E+00	5.24682E+16
21	.00000E+00	.00000E+00	1.76150E+14	2.76921E-01	5.23100E+12	1.00736E+15	.00000E+00	9.99984E-01	3.20827E+15
22	.00000E+00	.00000E+00	9.08164E+13	4.57467E-01	1.68751E+13	8.37150E+14	.00000E+00	9.99794E-01	6.12986E+15
23	.00000E+00	.00000E+00	9.94465E+13	5.58855E-01	7.09889E+13	7.34725E+14	.00000E+00	9.98991E-01	9.12536E+15
24	.00000E+00	.00000E+00	1.03968E+14	6.38910E-01	8.84153E+13	6.63570E+14	.00000E+00	9.97554E-01	1.19231E+16
25	.00000E+00	.00000E+00	9.93331E+13	7.16938E-01	9.48582E+13	5.97217E+14	.00000E+00	9.96386E-01	1.58276E+16
26	.00000E+00	.00000E+00	2.65053E+14	5.89296E-01	8.98188E+13	8.01307E+14	.00000E+00	9.98521E-01	1.11369E+16
27	.00000E+00	.00000E+00	1.07026E+14	7.62906E-01	8.71464E+13	5.46400E+14	.00000E+00	9.94150E-01	1.76055E+16
28	.00000E+00	.00000E+00	1.83245E+14	8.35661E-01	2.19065E+14	4.25166E+14	.00000E+00	9.93863E-01	2.57639E+16
29	.00000E+00	.00000E+00	3.68399E+14	8.27240E-01	3.89096E+14	4.48995E+14	.00000E+00	9.96408E-01	2.96729E+16
30	.00000E+00	.00000E+00	2.77679E+14	8.80860E-01	2.94669E+14	3.60402E+14	.00000E+00	9.94199E-01	3.43763E+16
31	.00000E+00	.00000E+00	1.86433E+14	9.07047E-01	2.27034E+14	3.93927E+14	.00000E+00	9.90664E-01	4.67168E+16
32	.00000E+00	.00000E+00	4.38314E+14	9.05787E-01	5.25606E+14	3.41497E+14	.00000E+00	9.94823E-01	5.78393E+16
33	.00000E+00	.00000E+00	5.00257E+14	9.16829E-01	5.76830E+14	3.11287E+14	.00000E+00	9.93379E-01	6.82106E+16
34	.00000E+00	.00000E+00	6.14516E+14	9.13949E-01	7.49687E+14	2.92466E+14	.00000E+00	9.94840E-01	8.43798E+16
35	.00000E+00	.00000E+00	1.47215E+15	8.54533E-01	1.85837E+15	3.11352E+14	.00000E+00	9.99730E-01	1.07006E+17
36	.00000E+00	.00000E+00	4.41405E+15	6.59616E-01	5.11617E+15	3.23378E+14	.00000E+00	9.99939E-01	1.24175E+17
37	.00000E+00	.00000E+00	5.58851E+15	5.99942E-01	6.30120E+15	3.31764E+14	.00000E+00	9.99949E-01	1.33421E+17
38	.00000E+00	.00000E+00	4.44720E+15	7.59160E-01	4.54724E+15	3.18480E+14	.00000E+00	9.99780E-01	1.32094E+17
39	.00000E+00	.00000E+00	3.86921E+15	7.88165E-01	4.07176E+15	3.01687E+14	.00000E+00	9.99747E-01	1.39238E+17
40	.00000E+00	.00000E+00	1.84815E+15	8.84809E-01	2.13490E+15	2.66783E+14	.00000E+00	9.98758E-01	1.59204E+17
41	.00000E+00	.00000E+00	2.16822E+15	8.85801E-01	2.53666E+15	2.09071E+14	.00000E+00	9.99096E-01	1.84990E+17
42	.00000E+00	.00000E+00	2.44183E+15	8.84758E-01	2.86356E+15	1.88782E+14	.00000E+00	9.99192E-01	2.16899E+17
43	.00000E+00	.00000E+00	2.83512E+15	8.77513E-01	3.19439E+15	1.72585E+14	.00000E+00	9.99254E-01	2.44347E+17
44	.00000E+00	.00000E+00	7.93946E+15	6.91436E-01	8.41770E+15	1.65244E+14	.00000E+00	9.99779E-01	2.58976E+17
45	.00000E+00	.00000E+00	8.41231E+15	7.77785E-01	8.68931E+15	1.63743E+14	.00000E+00	9.99667E-01	2.66967E+17
46	.00000E+00	.00000E+00	6.18773E+15	7.61737E-01	6.72986E+15	1.72266E+14	.00000E+00	9.99768E-01	2.90242E+17
47	.00000E+00	.00000E+00	6.42716E+15	7.46129E-01	7.01719E+15	1.92643E+14	.00000E+00	9.99770E-01	3.15055E+17
48	.00000E+00	.00000E+00	1.08110E+16	6.00652E-01	1.12180E+16	2.01261E+14	.00000E+00	9.99826E-01	3.22292E+17
49	.00000E+00	.00000E+00	1.00210E+16	6.58616E-01	1.04619E+16	2.16641E+14	.00000E+00	9.99837E-01	3.26526E+17
50	.00000E+00	.00000E+00	7.85842E+15	7.11790E-01	8.34251E+15	2.24512E+14	.00000E+00	9.99781E-01	3.23004E+17
51	.00000E+00	.00000E+00	8.30746E+15	6.14723E-01	8.75407E+15	5.70126E+14	.00000E+00	9.99843E-01	3.21833E+17
52	.00000E+00	.00000E+00	9.29038E+15	5.54898E-01	9.70095E+15	7.89882E+14	.00000E+00	9.99884E-01	3.25188E+17
53	.00000E+00	.00000E+00	8.80684E+15	5.54712E-01	9.34783E+15	8.63884E+14	.00000E+00	9.99861E-01	3.31516E+17
54	.00000E+00	.00000E+00	9.59442E+15	4.64444E-01	1.05560E+16	9.03349E+14	.00000E+00	9.99930E-01	3.47657E+17
55	.00000E+00	.00000E+00	1.17453E+16	3.11067E-01	1.32900E+16	9.53549E+14	.00000E+00	9.99940E-01	3.69009E+17
56	.00000E+00	.00000E+00	1.03426E+16	4.42530E-01	1.14686E+16	9.28720E+14	.00000E+00	9.99910E-01	3.61037E+17
57	.00000E+00	.00000E+00	9.65663E+15	5.18761E-01	1.05757E+16	9.08529E+14	.00000E+00	9.99890E-01	3.57322E+17
58	.00000E+00	.00000E+00	9.78873E+15	5.16267E-01	1.08569E+16	9.13734E+14	.00000E+00	9.99912E-01	3.65907E+17

Table 5.5-16 - DORT Output for Photon Adjoint Calculation (2 pages)

59	.00000E+00	.00000E+00	1.00129E+16	5.83867E-01	1.08017E+16	8.98321E+14	.00000E+00	9.99849E-01	3.57432E+17
60	.00000E+00	.00000E+00	8.65033E+15	5.95052E-01	9.50532E+15	1.18369E+15	.00000E+00	9.99791E-01	3.61809E+17
61	.00000E+00	.00000E+00	8.97375E+15	5.47754E-01	1.01790E+16	1.27626E+15	.00000E+00	9.99851E-01	3.84461E+17
62	.00000E+00	.00000E+00	8.58790E+15	5.19415E-01	9.33720E+15	2.07760E+15	.00000E+00	9.99879E-01	3.88976E+17
63	.00000E+00	.00000E+00	1.00456E+16	4.78027E-01	1.04705E+16	2.48744E+15	.00000E+00	9.99913E-01	4.12131E+17
64	.00000E+00	.00000E+00	1.04655E+16	4.60537E-01	1.06144E+16	3.06948E+15	.00000E+00	9.99871E-01	4.33723E+17
65	.00000E+00	.00000E+00	1.10513E+16	4.64586E-01	1.10975E+16	3.31467E+15	.00000E+00	9.99928E-01	4.58078E+17
66	.00000E+00	.00000E+00	1.19767E+16	4.65727E-01	1.22676E+16	3.71067E+15	.00000E+00	9.99928E-01	5.08622E+17
67	.00000E+00	.00000E+00	1.23067E+16	4.93401E-01	1.26611E+16	4.35918E+15	.00000E+00	9.99863E-01	5.71096E+17

Table 5.5-17 - DORT Output for Neutron Adjoint Calculation

0 grp.	fsn source	fsn rate	inscatter	slfscat/col	outscatter	absorption	db2 loss	out/in	flux*volume
21	00000E+00	.00000E+00	.00000E+00	2.76165E-01	1.90052E+03	3.67426E+05	.00000E+00	9.91193E-01	1.16561E+06
22	.00000E+00	.00000E+00	2.82572E+03	4.56545E-01	2.43699E+05	1.21334E+07	.00000E+00	9.99932E-01	8.84986E+07
23	.00000E+00	.00000E+00	6.78605E+05	5.58000E-01	2.72698E+06	2.83246E+07	.00000E+00	9.96951E-01	3.50431E+08
24	.00000E+00	.00000E+00	2.58165E+06	6.38137E-01	8.33687E+06	6.27902E+07	.00000E+00	9.94791E-01	1.12387E+09
25	.00000E+00	.00000E+00	6.71852E+06	7.16301E-01	1.92120E+07	1.21365E+08	.00000E+00	9.93110E-01	3.20455E+09
26	.00000E+00	.00000E+00	2.58500E+07	5.89039E-01	2.69448E+07	2.40604E+08	.00000E+00	9.97220E-01	3.33984E+09
27	.00000E+00	.00000E+00	1.65357E+07	7.62641E-01	5.93466E+07	3.72632E+08	.00000E+00	9.90442E-01	1.19853E+10
28	.00000E+00	.00000E+00	1.01972E+08	8.35492E-01	2.51802E+08	4.89506E+08	.00000E+00	9.91106E-01	2.96068E+10
29	.00000E+00	.00000E+00	3.88421E+08	8.27137E-01	6.27091E+08	7.24432E+08	.00000E+00	9.94947E-01	4.78126E+10
30	.00000E+00	.00000E+00	4.10039E+08	8.80778E-01	6.33401E+08	7.75463E+08	.00000E+00	9.92417E-01	7.38696E+10
31	.00000E+00	.00000E+00	3.59174E+08	9.06991E-01	8.35957E+08	1.45141E+09	.00000E+00	9.88014E-01	1.71956E+11
32	.00000E+00	.00000E+00	1.56350E+09	9.05748E-01	2.51976E+09	1.63800E+09	.00000E+00	9.93971E-01	2.77191E+11
33	.00000E+00	.00000E+00	2.34579E+09	9.16800E-01	3.55743E+09	1.92062E+09	.00000E+00	9.92245E-01	4.20539E+11
34	.00000E+00	.00000E+00	3.73660E+09	9.13923E-01	5.91478E+09	2.30831E+09	.00000E+00	9.94015E-01	6.65526E+11
35	.00000E+00	.00000E+00	1.15587E+10	8.54497E-01	1.85213E+10	3.10395E+09	.00000E+00	9.99720E-01	1.06613E+12
36	.00000E+00	.00000E+00	4.39152E+10	6.59561E-01	5.82307E+10	3.68186E+09	.00000E+00	9.99958E-01	1.41297E+12
37	.00000E+00	.00000E+00	6.10544E+10	5.99889E-01	7.63876E+10	4.02337E+09	.00000E+00	9.99966E-01	1.61706E+12
38	.00000E+00	.00000E+00	5.24075E+10	7.59122E-01	5.49900E+10	3.85269E+09	.00000E+00	9.99816E-01	1.59704E+12
39	.00000E+00	.00000E+00	4.67261E+10	7.88105E-01	5.12464E+10	3.79682E+09	.00000E+00	9.99822E-01	1.75132E+12
40	.00000E+00	.00000E+00	2.30290E+10	8.84777E-01	3.19422E+10	3.99253E+09	.00000E+00	9.98627E-01	2.38107E+12
41	.00000E+00	.00000E+00	3.21206E+10	8.85786E-01	4.80425E+10	3.96140E+09	.00000E+00	9.99013E-01	3.50251E+12
42	.00000E+00	.00000E+00	4.61467E+10	8.84736E-01	7.43858E+10	4.90605E+09	.00000E+00	9.99107E-01	5.63233E+12
43	.00000E+00	.00000E+00	7.35077E+10	8.77492E-01	1.02177E+11	5.52252E+09	.00000E+00	9.99156E-01	7.81325E+12
44	.00000E+00	.00000E+00	2.53679E+11	6.91396E-01	3.06210E+11	6.01293E+09	.00000E+00	9.99820E-01	9.41803E+12
45	.00000E+00	.00000E+00	3.04614E+11	7.77769E-01	3.39443E+11	6.39877E+09	.00000E+00	9.99661E-01	1.04269E+13
46	.00000E+00	.00000E+00	2.41368E+11	7.61699E-01	3.57776E+11	9.15928E+09	.00000E+00	9.99843E-01	1.54251E+13
47	.00000E+00	.00000E+00	3.36795E+11	7.46091E-01	5.77611E+11	1.58567E+10	.00000E+00	9.99859E-01	2.59252E+13
48	.00000E+00	.00000E+00	8.64207E+11	6.00617E-01	1.04855E+12	1.88106E+10	.00000E+00	9.99906E-01	3.01164E+13
49	.00000E+00	.00000E+00	8.71975E+11	6.58594E-01	1.10320E+12	2.28435E+10	.00000E+00	9.99891E-01	3.44249E+13
50	.00000E+00	.00000E+00	6.97981E+11	7.11783E-01	1.08879E+12	2.92997E+10	.00000E+00	9.99832E-01	4.21480E+13
51	.00000E+00	.00000E+00	8.54632E+11	6.14704E-01	2.31286E+12	1.50606E+11	.00000E+00	9.99896E-01	8.50097E+13
52	.00000E+00	.00000E+00	1.69996E+12	5.54878E-01	5.38782E+12	4.38635E+11	.00000E+00	9.99925E-01	1.80566E+14
53	.00000E+00	.00000E+00	2.67520E+12	5.54704E-01	1.38350E+13	1.27840E+12	.00000E+00	9.99918E-01	4.90552E+14
54	.00000E+00	.00000E+00	6.95754E+12	4.64412E-01	6.32753E+13	5.41381E+12	.00000E+00	9.99973E-01	2.08341E+15
55	.00000E+00	.00000E+00	3.63040E+13	3.11016E-01	2.01849E+14	1.44790E+13	.00000E+00	9.99992E-01	5.60286E+15
56	.00000E+00	.00000E+00	3.70055E+13	4.42493E-01	1.39974E+14	1.13326E+13	.00000E+00	9.99965E-01	4.40529E+15
57	.00000E+00	.00000E+00	3.82512E+13	5.18746E-01	1.08650E+14	9.33217E+12	.00000E+00	9.99948E-01	3.67009E+15
58	.00000E+00	.00000E+00	4.51902E+13	5.16246E-01	1.40794E+14	1.18477E+13	.00000E+00	9.99931E-01	4.74409E+15
59	.00000E+00	.00000E+00	6.00655E+13	5.83853E-01	1.27820E+14	1.06290E+13	.00000E+00	9.99892E-01	4.22890E+15
60	.00000E+00	.00000E+00	4.97613E+13	5.95047E-01	1.87536E+14	2.33518E+13	.00000E+00	9.99911E-01	7.13730E+15
61	.00000E+00	.00000E+00	9.05564E+13	5.47740E-01	3.89162E+14	4.87886E+13	.00000E+00	9.99924E-01	1.46961E+16
62	.00000E+00	.00000E+00	1.46284E+14	5.19400E-01	5.53920E+14	1.23235E+14	.00000E+00	9.99912E-01	2.30713E+16
63	.00000E+00	.00000E+00	2.00830E+14	4.78012E-01	5.10802E+14	1.21337E+14	.00000E+00	9.99930E-01	2.01021E+16
64	.00000E+00	.00000E+00	1.78845E+14	4.60519E-01	5.05425E+14	1.46146E+14	.00000E+00	9.99942E-01	2.06489E+16
65	.00000E+00	.00000E+00	1.89082E+14	4.64570E-01	5.10091E+14	1.52344E+14	.00000E+00	9.99922E-01	2.10516E+16
66	.00000E+00	.00000E+00	2.26611E+14	4.65710E-01	6.53387E+14	1.97620E+14	.00000E+00	9.99947E-01	2.70850E+16
67	.00000E+00	.00000E+00	2.73591E+14	4.93383E-01	8.43981E+14	2.90552E+14	.00000E+00	9.99934E-01	3.80618E+16

5.5.5 Example Computer Code Input Files

PWR ORIGEN2 Input File

```
-1
-1
-1
BAS     One MTU at 1.5 w/o; Avg. Const. Power to 40 GWD/MTU
RDA      -1=Fresh fuel, initial masses for one MTU
RDA      -2=2xBurned result (1 MTU)
CUT 5 0.01 -1
LIP 0 0 0
LIB 1 1 2 3 601 602 603 9 3 0 1 38
PHO 101 102 103 10
TIT      INITIAL COMPOSITION
RDA      READ FUEL COMPOSITIONS
INP -1 1 -1 -1 1 1
TIT  1 MTU Through Three Cycles - 3600 MWt
MOV      -1 1 0 1.0
HED 1    CHARGE
BUP
IRP    1.0   40.2235     1  2  4 2
IRP   50.0   40.2235     2  3  4 0
IRP  100.0   40.2235     3  4  4 0
IRP  200.0   40.2235     4  5  4 0
IRP  350.0   40.2235     5  6  4 0
IRP  500.0   40.2235     6  7  4 0
IRP  650.0   40.2235     7  8  4 0
IRP  800.0   40.2235     8  9  4 0
IRP  950.0   40.2235     9  10 4 0
IRP  994.44  40.2235    10  11 4 0
BUP
RDA  The next 3 cards cause ORIGEN to report thermal watt summaries
OPTL 8 8 8 8 8 8 8 8 8 8 8 8 8 8 8 8 8 8 8 8 8 8 8 8 8
OPTA 8 8 8 8 8 8 8 8 7 8 8 8 8 8 8 8 8 8 8 8 8 8 8 8 8
OPTF 8 8 8 8 8 8 8 8 7 8 8 8 8 8 8 8 8 8 8 8 8 8 8 8 8
RDA
RDA  Uncomment the following card to print the burnup steps.
RDA OUT 11 1 -1 0
RDA
RDA  Now the result of the third region gets moved to vector -2.
MOV      11 -2 0 1.0
RDA
RDA  Now the totals for the discharge MTU get moved to vector 1 and the
RDA  decay steps are determined.
MOV      -2  1 0 1.0
TIT      Decayed Activities Based on 1 MTU of Fuel
DEC       1.0           1  2  5 1
DEC       2.0           2  3  5 0
DEC       4.0           3  4  5 0
DEC       6.0           4  5  5 0
DEC       8.0           5  6  5 0
DEC      10.0           6  7  5 0
DEC      12.0           7  8  5 0
DEC      15.0           8  9  5 0
```

```
DEC      20.0           9 10  5 0
DEC      50.0          10 11  5 0
DEC      80.0          11 12  5 0
OUT 12 1 -1 0
STP 2
2  922350 15000.0  922380 985000.    0      0.00
0
BAS     One MTU at 2.0 w/o; Avg. Const. Power to 40 GWD/MTU
INP -1 1 -1 -1 1 1
MOV      -1 1 0 1.0
BUP
IRP    1.0   40.2235     1  2  4 2
IRP   50.0   40.2235     2  3  4 0
IRP  100.0   40.2235     3  4  4 0
IRP  200.0   40.2235     4  5  4 0
IRP  350.0   40.2235     5  6  4 0
IRP  500.0   40.2235     6  7  4 0
IRP  650.0   40.2235     7  8  4 0
IRP  800.0   40.2235     8  9  4 0
IRP  950.0   40.2235     9  10 4 0
IRP  994.44  40.2235    10  11 4 0
BUP
MOV      11 -2 0 1.0
MOV      -2  1 0 1.0
TIT      Decayed Activities Based on 1 MTU of Fuel
DEC       1.0           1  2  5 1
DEC       2.0           2  3  5 0
DEC       4.0           3  4  5 0
DEC       6.0           4  5  5 0
DEC       8.0           5  6  5 0
DEC      10.0           6  7  5 0
DEC      12.0           7  8  5 0
DEC      15.0           8  9  5 0
DEC      20.0           9 10  5 0
DEC      50.0          10 11  5 0
DEC      80.0          11 12  5 0
OUT 12 1 -1 0
STP 2
2  922350 20000.0  922380 980000.    0      0.00
0
BAS     One MTU at 2.5 w/o; Avg. Const. Power to 40 GWD/MTU
INP -1 1 -1 -1 1 1
MOV      -1 1 0 1.0
BUP
IRP    1.0   40.2235     1  2  4 2
IRP   50.0   40.2235     2  3  4 0
IRP  100.0   40.2235     3  4  4 0
IRP  200.0   40.2235     4  5  4 0
IRP  350.0   40.2235     5  6  4 0
IRP  500.0   40.2235     6  7  4 0
IRP  650.0   40.2235     7  8  4 0
IRP  800.0   40.2235     8  9  4 0
IRP  950.0   40.2235     9  10 4 0
IRP  994.44  40.2235    10  11 4 0
BUP
MOV      11 -2 0 1.0
MOV      -2  1 0 1.0
TIT      Decayed Activities Based on 1 MTU of Fuel
DEC       1.0           1  2  5 1
DEC       2.0           2  3  5 0
```

```
DEC       4.0           3  4  5 0
DEC       6.0           4  5  5 0
DEC       8.0           5  6  5 0
DEC      10.0           6  7  5 0
DEC      12.0           7  8  5 0
DEC      15.0           8  9  5 0
DEC      20.0           9 10  5 0
DEC      50.0          10 11  5 0
DEC      80.0          11 12  5 0
OUT 12 1 -1 0
STP 2
2  922350 25000.0  922380 975000.    0      0.00
0
BAS     One MTU at 3.0 w/o; Avg. Const. Power to 40 GWD/MTU
INP -1 1 -1 -1 1 1
MOV      -1 1 0 1.0
BUP
IRP    1.0   40.2235     1  2  4 2
IRP   50.0   40.2235     2  3  4 0
IRP  100.0   40.2235     3  4  4 0
IRP  200.0   40.2235     4  5  4 0
IRP  350.0   40.2235     5  6  4 0
IRP  500.0   40.2235     6  7  4 0
IRP  650.0   40.2235     7  8  4 0
IRP  800.0   40.2235     8  9  4 0
IRP  950.0   40.2235     9  10 4 0
IRP  994.44  40.2235    10  11 4 0
BUP
MOV      11 -2 0 1.0
MOV      -2  1 0 1.0
TIT      Decayed Activities Based on 1 MTU of Fuel
DEC       1.0           1  2  5 1
DEC       2.0           2  3  5 0
DEC       4.0           3  4  5 0
DEC       6.0           4  5  5 0
DEC       8.0           5  6  5 0
DEC      10.0           6  7  5 0
DEC      12.0           7  8  5 0
DEC      15.0           8  9  5 0
DEC      20.0           9 10  5 0
DEC      50.0          10 11  5 0
DEC      80.0          11 12  5 0
OUT 12 1 -1 0
STP 2
2  922350 30000.0  922380 970000.    0      0.00
0
BAS     One MTU at 3.5 w/o; Avg. Const. Power to 40 GWD/MTU
INP -1 1 -1 -1 1 1
MOV      -1 1 0 1.0
BUP
IRP    1.0   40.2235     1  2  4 2
IRP   50.0   40.2235     2  3  4 0
IRP  100.0   40.2235     3  4  4 0
IRP  200.0   40.2235     4  5  4 0
IRP  350.0   40.2235     5  6  4 0
IRP  500.0   40.2235     6  7  4 0
IRP  650.0   40.2235     7  8  4 0
IRP  800.0   40.2235     8  9  4 0
IRP  950.0   40.2235     9  10 4 0
IRP  994.44  40.2235    10  11 4 0
```

```
BUP
MOV      11 -2 0 1.0
MOV      -2  1 0 1.0
TIT      Decayed Activities Based on 1 MTU of Fuel
DEC       1.0           1  2  5 1
DEC       2.0           2  3  5 0
DEC       4.0           3  4  5 0
DEC       6.0           4  5  5 0
DEC       8.0           5  6  5 0
DEC      10.0           6  7  5 0
DEC      12.0           7  8  5 0
DEC      15.0           8  9  5 0
DEC      20.0           9 10  5 0
DEC      50.0          10 11  5 0
DEC      80.0          11 12  5 0
OUT 12 1 -1 0
STP 2
2  922350 35000.0  922380 965000.    0      0.00
0
BAS     One MTU at 4.0 w/o; Avg. Const. Power to 40 GWD/MTU
INP -1 1 -1 -1 1 1
MOV      -1 1 0 1.0
BUP
IRP    1.0   40.2235     1  2  4 2
IRP   50.0   40.2235     2  3  4 0
IRP  100.0   40.2235     3  4  4 0
IRP  200.0   40.2235     4  5  4 0
IRP  350.0   40.2235     5  6  4 0
IRP  500.0   40.2235     6  7  4 0
IRP  650.0   40.2235     7  8  4 0
IRP  800.0   40.2235     8  9  4 0
IRP  950.0   40.2235     9  10 4 0
IRP  994.44  40.2235    10  11 4 0
BUP
MOV      11 -2 0 1.0
MOV      -2  1 0 1.0
TIT      Decayed Activities Based on 1 MTU of Fuel
DEC       1.0           1  2  5 1
DEC       2.0           2  3  5 0
DEC       4.0           3  4  5 0
DEC       6.0           4  5  5 0
DEC       8.0           5  6  5 0
DEC      10.0           6  7  5 0
DEC      12.0           7  8  5 0
DEC      15.0           8  9  5 0
DEC      20.0           9 10  5 0
DEC      50.0          10 11  5 0
DEC      80.0          11 12  5 0
OUT 12 1 -1 0
STP 2
2  922350 40000.0  922380 960000.    0      0.00
0
BAS     One MTU at 4.5 w/o; Avg. Const. Power to 40 GWD/MTU
INP -1 1 -1 -1 1 1
MOV      -1 1 0 1.0
BUP
IRP    1.0   40.2235     1  2  4 2
IRP   50.0   40.2235     2  3  4 0
IRP  100.0   40.2235     3  4  4 0
IRP  200.0   40.2235     4  5  4 0
```

```
IRP  350.0   40.2235     5  6  4 0
IRP  500.0   40.2235     6  7  4 0
IRP  650.0   40.2235     7  8  4 0
IRP  800.0   40.2235     8  9  4 0
IRP  950.0   40.2235     9  10 4 0
IRP  994.44  40.2235    10  11 4 0
BUP
MOV      11 -2 0 1.0
MOV      -2  1 0 1.0
TIT      Decayed Activities Based on 1 MTU of Fuel
DEC       1.0           1  2  5 1
DEC       2.0           2  3  5 0
DEC       4.0           3  4  5 0
DEC       6.0           4  5  5 0
DEC       8.0           5  6  5 0
DEC      10.0           6  7  5 0
DEC      12.0           7  8  5 0
DEC      15.0           8  9  5 0
DEC      20.0           9 10  5 0
DEC      50.0          10 11  5 0
DEC      80.0          11 12  5 0
OUT 12 1 -1 0
STP 2
2  922350 45000.0  922380 955000.    0      0.00
0
BAS     One MTU at 5.0 w/o; Avg. Const. Power to 40 GWD/MTU
INP -1 1 -1 -1 1 1
MOV      -1 1 0 1.0
BUP
IRP    1.0   40.2235     1  2  4 2
IRP   50.0   40.2235     2  3  4 0
IRP  100.0   40.2235     3  4  4 0
IRP  200.0   40.2235     4  5  4 0
IRP  350.0   40.2235     5  6  4 0
IRP  500.0   40.2235     6  7  4 0
IRP  650.0   40.2235     7  8  4 0
IRP  800.0   40.2235     8  9  4 0
IRP  950.0   40.2235     9  10 4 0
IRP  994.44  40.2235    10  11 4 0
BUP
MOV      11 -2 0 1.0
MOV      -2  1 0 1.0
TIT      Decayed Activities Based on 1 MTU of Fuel
DEC       1.0           1  2  5 1
DEC       2.0           2  3  5 0
DEC       4.0           3  4  5 0
DEC       6.0           4  5  5 0
DEC       8.0           5  6  5 0
DEC      10.0           6  7  5 0
DEC      12.0           7  8  5 0
DEC      15.0           8  9  5 0
DEC      20.0           9 10  5 0
DEC      50.0          10 11  5 0
DEC      80.0          11 12  5 0
OUT 12 1 -1 0
STP 2
2  922350 50000.0  922380 950000.    0      0.00
0
BAS     One MTU at 5.5 w/o; Avg. Const. Power to 40 GWD/MTU
INP -1 1 -1 -1 1 1
```

```
MOV      -1 1 0 1.0
BUP
IRP    1.0   40.2235     1  2  4 2
IRP   50.0   40.2235     2  3  4 0
IRP  100.0   40.2235     3  4  4 0
IRP  200.0   40.2235     4  5  4 0
IRP  350.0   40.2235     5  6  4 0
IRP  500.0   40.2235     6  7  4 0
IRP  650.0   40.2235     7  8  4 0
IRP  800.0   40.2235     8  9  4 0
IRP  950.0   40.2235     9  10 4 0
IRP  994.44  40.2235    10  11 4 0
BUP
MOV      11 -2 0 1.0
MOV      -2  1 0 1.0
TIT      Decayed Activities Based on 1 MTU of Fuel
DEC       1.0           1  2  5 1
DEC       2.0           2  3  5 0
DEC       4.0           3  4  5 0
DEC       6.0           4  5  5 0
DEC       8.0           5  6  5 0
DEC      10.0           6  7  5 0
DEC      12.0           7  8  5 0
DEC      15.0           8  9  5 0
DEC      20.0           9 10  5 0
DEC      50.0          10 11  5 0
DEC      80.0          11 12  5 0
OUT 12 1 -1 0
STP 2
2  922350 55000.0  922380 945000.    0      0.00
0
END
```

BWR ORIGEN2 Input File

```
-1
-1
-1
BAS     One MTU at 1.5 w/o; Avg. Const. Power to 40 GWD/MTU
RDA      -1=Fresh fuel, initial masses for one MTU
RDA      -2=2xBurned result (1 MTU)
CUT 5 0.01 -1
LIP 0 0 0
LIB 1 1 2 3 657 658 659 9 3 0 1 42
PHO 101 102 103 10
TIT      INITIAL COMPOSITION
RDA      READ FUEL COMPOSITIONS
INP -1 1 -1 -1 1 1
TIT  1 MTU Through Four Cycles - 3359 MWt
MOV      -1 1 0 1.0
HED 1    CHARGE
BUP
IRP    1.0   23.5099     1  2  4 2
IRP   50.0   23.5099     2  3  4 0
IRP  200.0   23.5099     3  4  4 0
IRP  400.0   23.5099     4  5  4 0
IRP  700.0   23.5099     5  6  4 0
IRP 1000.0   23.5099     6  7  4 0
IRP 1300.0   23.5099     7  8  4 0
IRP 1500.0   23.5099     8  9  4 0
IRP 1600.0   23.5099     9  10 4 0
IRP 1701.41  23.5099    10  11 4 0
BUP
RDA  The next 3 cards cause ORIGEN to report thermal watt summaries
OPTL 8 8 8 8 8 8 8 8 8 8 8 8 8 8 8 8 8 8 8 8 8 8 8 8
OPTA 8 8 8 8 8 8 8 8 7 8 8 8 8 8 8 8 8 8 8 8 8 8 8 8
OPTF 8 8 8 8 8 8 8 8 7 8 8 8 8 8 8 8 8 8 8 8 8 8 8 8
RDA
RDA  Uncomment the following card to print the burnup steps.
RDA OUT 11 1 -1 0
RDA
RDA  Now the result of the third region gets moved to vector -2.
MOV      11 -2 0 1.0
RDA
RDA  Now the totals for the discharge MTU get moved to vector 1 and the
RDA  decay steps are determined.
MOV      -2  1 0 1.0
TIT      Decayed Activities Based on 1 MTU of Fuel
DEC       1.0           1  2  5 1
DEC       2.0           2  3  5 0
DEC       4.0           3  4  5 0
DEC       6.0           4  5  5 0
DEC       8.0           5  6  5 0
DEC      10.0           6  7  5 0
DEC      12.0           7  8  5 0
DEC      15.0           8  9  5 0
DEC      20.0           9 10  5 0
DEC      50.0          10 11  5 0
DEC      80.0          11 12  5 0
OUT 12 1 -1 0
```

```
STP 2
2  922350 15000.0  922380 985000.    0      0.00
0
BAS     One MTU at 2.0 w/o; Avg. Const. Power to 40 GWD/MTU
INP -1 1 -1 -1 1 1
MOV      -1 1 0 1.0
BUP
IRP    1.0   23.5099     1  2  4 2
IRP   50.0   23.5099     2  3  4 0
IRP  200.0   23.5099     3  4  4 0
IRP  400.0   23.5099     4  5  4 0
IRP  700.0   23.5099     5  6  4 0
IRP 1000.0   23.5099     6  7  4 0
IRP 1300.0   23.5099     7  8  4 0
IRP 1500.0   23.5099     8  9  4 0
IRP 1600.0   23.5099     9  10 4 0
IRP 1701.41  23.5099    10  11 4 0
BUP
MOV      11 -2 0 1.0
MOV      -2  1 0 1.0
TIT      Decayed Activities Based on 1 MTU of Fuel
DEC       1.0           1  2  5 1
DEC       2.0           2  3  5 0
DEC       4.0           3  4  5 0
DEC       6.0           4  5  5 0
DEC       8.0           5  6  5 0
DEC      10.0           6  7  5 0
DEC      12.0           7  8  5 0
DEC      15.0           8  9  5 0
DEC      20.0           9 10  5 0
DEC      50.0          10 11  5 0
DEC      80.0          11 12  5 0
OUT 12 1 -1 0
STP 2
2  922350 20000.0  922380 980000.    0      0.00
0
BAS     One MTU at 2.5 w/o; Avg. Const. Power to 40 GWD/MTU
INP -1 1 -1 -1 1 1
MOV      -1 1 0 1.0
BUP
IRP    1.0   23.5099     1  2  4 2
IRP   50.0   23.5099     2  3  4 0
IRP  200.0   23.5099     3  4  4 0
IRP  400.0   23.5099     4  5  4 0
IRP  700.0   23.5099     5  6  4 0
IRP 1000.0   23.5099     6  7  4 0
IRP 1300.0   23.5099     7  8  4 0
IRP 1500.0   23.5099     8  9  4 0
IRP 1600.0   23.5099     9  10 4 0
IRP 1701.41  23.5099    10  11 4 0
BUP
MOV      11 -2 0 1.0
MOV      -2  1 0 1.0
TIT      Decayed Activities Based on 1 MTU of Fuel
DEC       1.0           1  2  5 1
DEC       2.0           2  3  5 0
DEC       4.0           3  4  5 0
DEC       6.0           4  5  5 0
DEC       8.0           5  6  5 0
DEC      10.0           6  7  5 0
```

```
DEC      12.0           7  8  5 0
DEC      15.0           8  9  5 0
DEC      20.0           9 10  5 0
DEC      50.0          10 11  5 0
DEC      80.0          11 12  5 0
OUT 12 1 -1 0
STP 2
2  922350 25000.0  922380 975000.    0      0.00
0
BAS     One MTU at 3.0 w/o; Avg. Constant. Power to 40 GWD/MTU
INP -1 1 -1 -1 1 1
MOV      -1 1 0 1.0
BUP
IRP    1.0   23.5099     1  2  4 2
IRP   50.0   23.5099     2  3  4 0
IRP  200.0   23.5099     3  4  4 0
IRP  400.0   23.5099     4  5  4 0
IRP  700.0   23.5099     5  6  4 0
IRP 1000.0   23.5099     6  7  4 0
IRP 1300.0   23.5099     7  8  4 0
IRP 1500.0   23.5099     8  9  4 0
IRP 1600.0   23.5099     9  10 4 0
IRP 1701.41  23.5099    10  11 4 0
BUP
MOV      11 -2 0 1.0
MOV      -2  1 0 1.0
TIT      Decayed Activities Based on 1 MTU of Fuel
DEC       1.0           1  2  5 1
DEC       2.0           2  3  5 0
DEC       4.0           3  4  5 0
DEC       6.0           4  5  5 0
DEC       8.0           5  6  5 0
DEC      10.0           6  7  5 0
DEC      12.0           7  8  5 0
DEC      15.0           8  9  5 0
DEC      20.0           9 10  5 0
DEC      50.0          10 11  5 0
DEC      80.0          11 12  5 0
OUT 12 1 -1 0
STP 2
2  922350 30000.0  922380 970000.    0      0.00
0
BAS     One MTU at 3.5 w/o; Avg. Constant. Power to 40 GWD/MTU
INP -1 1 -1 -1 1 1
MOV      -1 1 0 1.0
BUP
IRP    1.0   23.5099     1  2  4 2
IRP   50.0   23.5099     2  3  4 0
IRP  200.0   23.5099     3  4  4 0
IRP  400.0   23.5099     4  5  4 0
IRP  700.0   23.5099     5  6  4 0
IRP 1000.0   23.5099     6  7  4 0
IRP 1300.0   23.5099     7  8  4 0
IRP 1500.0   23.5099     8  9  4 0
IRP 1600.0   23.5099     9  10 4 0
IRP 1701.41  23.5099    10  11 4 0
BUP
MOV      11 -2 0 1.0
MOV      -2  1 0 1.0
TIT      Decayed Activities Based on 1 MTU of Fuel
```

```
DEC       1.0           1  2  5 1
DEC       2.0           2  3  5 0
DEC       4.0           3  4  5 0
DEC       6.0           4  5  5 0
DEC       8.0           5  6  5 0
DEC      10.0           6  7  5 0
DEC      12.0           7  8  5 0
DEC      15.0           8  9  5 0
DEC      20.0           9 10  5 0
DEC      50.0          10 11  5 0
DEC      80.0          11 12  5 0
OUT 12 1 -1 0
STP 2
2  922350 35000.0  922380 965000.    0      0.00
0
BAS     One MTU at 4.0 w/o; Avg. Const. Power to 40 GWD/MTU
INP -1 1 -1 -1 1 1
MOV      -1 1 0 1.0
BUP
IRP    1.0   23.5099     1  2  4 2
IRP   50.0   23.5099     2  3  4 0
IRP  200.0   23.5099     3  4  4 0
IRP  400.0   23.5099     4  5  4 0
IRP  700.0   23.5099     5  6  4 0
IRP 1000.0   23.5099     6  7  4 0
IRP 1300.0   23.5099     7  8  4 0
IRP 1500.0   23.5099     8  9  4 0
IRP 1600.0   23.5099     9  10 4 0
IRP 1701.41  23.5099    10  11 4 0
BUP
MOV      11 -2 0 1.0
MOV      -2  1 0 1.0
TIT      Decayed Activities Based on 1 MTU of Fuel
DEC       1.0           1  2  5 1
DEC       2.0           2  3  5 0
DEC       4.0           3  4  5 0
DEC       6.0           4  5  5 0
DEC       8.0           5  6  5 0
DEC      10.0           6  7  5 0
DEC      12.0           7  8  5 0
DEC      15.0           8  9  5 0
DEC      20.0           9 10  5 0
DEC      50.0          10 11  5 0
DEC      80.0          11 12  5 0
OUT 12 1 -1 0
STP 2
2  922350 40000.0  922380 960000.    0      0.00
0
BAS     One MTU at 4.5 w/o; Avg. Const. Power to 40 GWD/MTU
INP -1 1 -1 -1 1 1
MOV      -1 1 0 1.0
BUP
IRP    1.0   23.5099     1  2  4 2
IRP   50.0   23.5099     2  3  4 0
IRP  200.0   23.5099     3  4  4 0
IRP  400.0   23.5099     4  5  4 0
IRP  700.0   23.5099     5  6  4 0
IRP 1000.0   23.5099     6  7  4 0
IRP 1300.0   23.5099     7  8  4 0
IRP 1500.0   23.5099     8  9  4 0
```

```
IRP 1600.0   23.5099     9  10 4 0
IRP 1701.41  23.5099    10  11 4 0
BUP
MOV      11 -2 0 1.0
MOV      -2  1 0 1.0
TIT      Decayed Activities Based on 1 MTU of Fuel
DEC       1.0           1  2  5 1
DEC       2.0           2  3  5 0
DEC       4.0           3  4  5 0
DEC       6.0           4  5  5 0
DEC       8.0           5  6  5 0
DEC      10.0           6  7  5 0
DEC      12.0           7  8  5 0
DEC      15.0           8  9  5 0
DEC      20.0           9 10  5 0
DEC      50.0          10 11  5 0
DEC      80.0          11 12  5 0
OUT 12 1 -1 0
STP 2
2  922350 45000.0  922380 955000.    0      0.00
0
BAS     One MTU at 5.0 w/o; Avg. Const. Power to 40 GWD/MTU
INP -1 1 -1 -1 1 1
MOV      -1 1 0 1.0
BUP
IRP    1.0   23.5099     1  2  4 2
IRP   50.0   23.5099     2  3  4 0
IRP  200.0   23.5099     3  4  4 0
IRP  400.0   23.5099     4  5  4 0
IRP  700.0   23.5099     5  6  4 0
IRP 1000.0   23.5099     6  7  4 0
IRP 1300.0   23.5099     7  8  4 0
IRP 1500.0   23.5099     8  9  4 0
IRP 1600.0   23.5099     9  10 4 0
IRP 1701.41  23.5099    10  11 4 0
BUP
MOV      11 -2 0 1.0
MOV      -2  1 0 1.0
TIT      Decayed Activities Based on 1 MTU of Fuel
DEC       1.0           1  2  5 1
DEC       2.0           2  3  5 0
DEC       4.0           3  4  5 0
DEC       6.0           4  5  5 0
DEC       8.0           5  6  5 0
DEC      10.0           6  7  5 0
DEC      12.0           7  8  5 0
DEC      15.0           8  9  5 0
DEC      20.0           9 10  5 0
DEC      50.0          10 11  5 0
DEC      80.0          11 12  5 0
OUT 12 1 -1 0
STP 2
2  922350 50000.0  922380 950000.    0      0.00
0
BAS     One MTU at 5.5 w/o; Avg. Const. Power to 40 GWD/MTU
INP -1 1 -1 -1 1 1
MOV      -1 1 0 1.0
BUP
IRP    1.0   23.5099     1  2  4 2
IRP   50.0   23.5099     2  3  4 0
```

```
IRP  200.0   23.5099     3  4  4 0
IRP  400.0   23.5099     4  5  4 0
IRP  700.0   23.5099     5  6  4 0
IRP 1000.0   23.5099     6  7  4 0
IRP 1300.0   23.5099     7  8  4 0
IRP 1500.0   23.5099     8  9  4 0
IRP 1600.0   23.5099     9  10 4 0
IRP 1701.41  23.5099    10  11 4 0
BUP
MOV      11 -2 0 1.0
MOV      -2  1 0 1.0
TIT      Decayed Activities Based on 1 MTU of Fuel
DEC       1.0           1  2  5 1
DEC       2.0           2  3  5 0
DEC       4.0           3  4  5 0
DEC       6.0           4  5  5 0
DEC       8.0           5  6  5 0
DEC      10.0           6  7  5 0
DEC      12.0           7  8  5 0
DEC      15.0           8  9  5 0
DEC      20.0           9 10  5 0
DEC      50.0          10 11  5 0
DEC      80.0          11 12  5 0
OUT 12 1 -1 0
STP 2
2  922350 55000.0  922380 945000.    0      0.00
0
END
```

PHOTON ADJOINT DORT INPUT DECK

```
W21 Canister and Storage Cask - R,Theta Photon Adjoint
61$$
/ NTFLX  NTFOG  NTSIG  NTBSI  NTDSI
   0     0     8     0    10
/ NTFCI  NTIBI  NTIBO  NTNPR  NTDIR
   0     0     0     0     0
/ NTDSO  NTSCL  NTZNF
   0     0     0  e
62$$
/  IADJ   ISCTM    IZM     IM     JM  (01 - 05)
     1      3      7    204     90
/   IGM    IHT    IHS    IHM   MIXL  (06 - 10)
    67      3      4     70     32
/  NMESH    MTP    MTM   IDFAC     MM  (11 - 15)
     0    117    125      0    160
/ INGEOM    IBL    IBR    IBB    IBT  (16 - 20)
     2      1      0      1      1
/  ISRMX   IFXMI   IFXMF   MODE   KTYPE  (21 - 25)
     0     -1      0      3      0
/   IACC   KALF  IGTYPE  INPFXM  INPSRM  (26 - 30)
     1      0      0      0      2
/ NJNTSR  NINTSR  NJNTFX  NINTFX   IACT  (31 - 35)
     0      0      0      0      0
/   IRED   IPDB2  IFXPRT  ICSPRT   IDIRF  (36 - 40)
     7      0      0      1      0
/  JDIRF   JDIRL    NBUF  IEPSBZ  MINBLK  (41 - 45)
     0      0      0      0      0
/ MAXBLK    ISBT    MSBT    MSDM  IBFSCL  (46 - 50)
     0      1      1      1      1
/ INTSCL  ITMSCL   NOFIS  IFDB2Z    ISWP  (51 - 55)
     4      8      0      0      0
/  KEYJN   KEYIN  NSIGTP  NORPOS  NORMAT  (56 - 60)
     1      1      0      0      0
/ MSTMAX  NEGFIX  LOCOBJ  LCMOBJ  NKEYFX  (61 - 65)
     0      1  22600      0      0
/ NCNDIN    NEUT  ITALLY  NEUTAC   ISCTC  (66 - 70)
     4      0      0      0      0  e
63**
/       TMAX        XNF        EPS        EPP        EPV  (01 - 05)
    0.00e-00   1.000e+20   1.00e-04   1.00e-03   0.00e-00
/        EPF      EKOBJ       EVTH      EVCHM      EVMAX  (06 - 10)
    1.00e-03   1.00e-00   2.00e-01   1.50e-00   1.00e+01
/      EVKMX        EVI     DEVDKI     EVDELK     SORMIN  (11 - 15)
    1.00e-00   1.00e-00  -1.00e-00   3.00e-01   1.00e+01
/     CONACC     CONSCL     CONEPS     WSOLMN     WSOLII  (16 - 20)
    1.00e-00   1.00e-04   1.00e-02   0.00e-00  -1.50e-00
/     WSOLCN        ORF     FSNACC     FLXMIN     SMOOTH  (21 - 25)
    1.50e-00   6.00e-01   0.00e-00   1.00e-30   0.00e-00
/        EPO     EXTRCV      THETA       ESP1       ESP2  (26 - 30)
    0.00e-00   2.00e-01   9.00e-01   0.00e-00   0.00e-00  e
  t
  t
/ S16 symmetric r,t quadrature
```

```
/ Quadrature Cosines Relative to the R axis
82**
-21082-5 -14907-5 14907-5 -42164-5 -39441-5 -14907-5 14907-5 39441-5
-55777-5 -53748-5 -39441-5 -14907-5 14907-5 39441-5 53748-5 -66667-5
-64979-5 -53748-5 -39441-5 -14907-5 14907-5 39441-5 53748-5 64979-5
-76012-5 -74536-5 -64979-5 -53748-5 -39441-5 -14907-5 14907-5 39441-5
53748-5 64979-5 74536-5 -84327-5 -82999-5 -74536-5 -64979-5 -53748-5
-39441-5 -14907-5 14907-5 39441-5 53748-5 64979-5 74536-5 82999-5
-91894-5 -90676-5 -82999-5 -74536-5 -64979-5 -53748-5 -39441-5 -14907-5
14907-5 39441-5 53748-5 64979-5 74536-5 82999-5 90676-5 -98883-5
-97753-5 -90676-5 -82999-5 -74536-5 -64979-5 -53748-5 -39441-5 -14907-5
14907-5 39441-5 53748-5 64979-5 74536-5 82999-5 90676-5 97753-5 -21082-5
-14907-5 14907-5 -42164-5 -39441-5 -14907-5 14907-5 39441-5 -55777-5
-53748-5 -39441-5 -14907-5 14907-5 39441-5 53748-5 -66667-5 -64979-5
-53748-5 -39441-5 -14907-5 14907-5 39441-5 53748-5 64979-5 -76012-5
-74536-5 -64979-5 -53748-5 -39441-5 -14907-5 14907-5 39441-5 53748-5
64979-5 74536-5 -84327-5 -82999-5 -74536-5 -64979-5 -53748-5 -39441-5
-14907-5 14907-5 39441-5 53748-5 64979-5 74536-5 82999-5 -91894-5
-90676-5 -82999-5 -74536-5 -64979-5 -53748-5 -39441-5 -14907-5 14907-5
39441-5 53748-5 64979-5 74536-5 82999-5 90676-5 -98883-5 -97753-5
-90676-5 -82999-5 -74536-5 -64979-5 -53748-5 -39441-5 -14907-5 14907-5
39441-5 53748-5 64979-5 74536-5 82999-5 90676-5 97753-5
/ Quadrature Cosines Relative to the Theta
83**
-1-5 2r-14904-5 -1-5 -14909-5 2r-39442-5 -14909-5 -1-5 -1491-4 -39441-5
2r-53749-5 -39441-5 -1491-4 -1-5 -14904-5 -3944-4 -53747-5 2r-64978-5
-53747-5 -3944-4 -14904-5 -1-5 -14904-5 -39439-5 -53748-5 -64978-5
2r-74535-5 -64978-5 -53748-5 -39439-5 -14904-5 -1-5 -1491-4 -3944-4
-53748-5 -64979-5 -74536-5 2r-83-2 -74536-5 -64979-5 -53748-5 -3944-4
-1491-4 -1-5 -14909-5 -39441-5 -53747-5 -64978-5 -74536-5 -82999-5
2r-90676-5 -82999-5 -74536-5 -64978-5 -53747-5 -39441-5 -14909-5 -1-5
-14904-5 -39442-5 -53749-5 -64978-5 -74535-5 -83-2 -90676-5 2r-97753-5
-90676-5 -83-2 -74535-5 -64978-5 -53749-5 -39442-5 -14904-5 1-5
2r14904-5 1-5 14909-5 2r39442-5 14909-5 1-5 1491-4 39441-5 2r53749-5
39441-5 1491-4 1-5 14904-5 3944-4 53747-5 2r64978-5 53747-5 3944-4
14904-5 1-5 14904-5 39439-5 53748-5 64978-5 2r74535-5 64978-5 53748-5
39439-5 14904-5 1-5 1491-4 3944-4 53748-5 64979-5 74536-5 2r83-2 74536-5
64979-5 53748-5 3944-4 1491-4 1-5 14909-5 39441-5 53747-5 64978-5
74536-5 82999-5 2r90676-5 82999-5 74536-5 64978-5 53747-5 39441-5
14909-5 1-5 14904-5 39442-5 53749-5 64978-5 74535-5 83-2 90676-5
2r97753-5 90676-5 83-2 74535-5 64978-5 53749-5 39442-5 14904-5
/ Quadrature Weights
81**
0 2r13586-6 0 4r97681-7 0 64738-7 5039-6 2r64738-7 5039-6 64738-7 0
64634-7 2r71124-7 2r64634-7 2r71124-7 64634-7 0 64634-7 14381-7 36342-7
14381-7 2r64634-7 14381-7 36342-7 14381-7 64634-7 0 64738-7 71124-7
2r36342-7 71124-7 2r64738-7 71124-7 2r36342-7 71124-7 64738-7 0 97681-7
5039-6 71124-7 14381-7 71124-7 5039-6 2r97681-7 5039-6 71124-7 14381-7
71124-7 5039-6 97681-7 0 13586-6 97681-7 64738-7 2r64634-7 64738-7
97681-7 2r13586-6 97681-7 64738-7 2r64634-7 64738-7 97681-7 13586-6 0
2r13586-6 0 4r97681-7 0 64738-7 5039-6 2r64738-7 5039-6 64738-7 0
64634-7 2r71124-7 2r64634-7 2r71124-7 64634-7 0 64634-7 14381-7 36342-7
14381-7 2r64634-7 14381-7 36342-7 14381-7 64634-7 0 64738-7 71124-7
2r36342-7 71124-7 2r64738-7 71124-7 2r36342-7 71124-7 64738-7 0 97681-7
5039-6 71124-7 14381-7 71124-7 5039-6 2r97681-7 5039-6 71124-7 14381-7
```

```
71124-7 5039-6 97681-7 0 13586-6 97681-7 64738-7 2r64634-7 64738-7
97681-7 2r13586-6 97681-7 64738-7 2r64634-7 64738-7 97681-7 13586-6
  t
/ R Axis Mesh Cell Boundaries
4**
    0.00000   0.75000   1.50000   2.25000   3.00000   3.75000
    4.50000   5.25000   6.00000   6.75000   7.50000   8.25000
    9.00000   9.75000  10.50000  11.25000  12.00000  12.75000
   13.50000  14.25000  15.00000  15.75000  16.50000  17.25000
   18.00000  18.75000  19.50000  20.25000  21.00000  21.75000
   22.50000  23.25000  24.00000  24.75000  25.50000  26.25000
   27.00000  27.75000  28.50000  29.25000  30.00000  30.75000
   31.50000  32.25000  33.00000  33.75000  34.50000  35.25000
   36.00000  36.75000  37.50000  38.25000  39.00000  39.75000
   40.50000  41.25000  42.00000  42.75000  43.50000  44.25000
   45.00000  45.75000  46.50000  47.25000  48.00000  48.75000
   49.50000  50.25000  51.00000  51.75000  52.50000  53.25000
   54.00000  54.75000  55.50000  56.25000  57.00000  57.75000
58.50000  59.25000  60.00000  60.75000  61.50000  62.25000
   63.00000  63.75000  64.50000  65.25000  66.00000  66.75000
   67.50000  68.25000  69.00000  69.75000  70.50000  71.25000
   72.00000  72.75000  73.50000  74.25000  75.00000  75.75000
   76.50000  77.25000  78.00000  78.75000  79.50000  80.25000
   81.00000  81.75000  1i 82.23 8i 83.82 4i 92.71 76i 97.79
  175.26    176.00
/ Y Axis Mesh Cell Boundaries
2**
  0.0000e+00  1.3889e-03  2.7778e-03  4.1667e-03  5.5556e-03  6.9444e-03
  8.3333e-03  9.7222e-03  1.1111e-02  1.2500e-02  1.3889e-02  1.5278e-02
  1.6667e-02  1.8056e-02  1.9444e-02  2.0833e-02  2.2222e-02  2.3611e-02
  2.5000e-02  2.6389e-02  2.7778e-02  2.9167e-02  3.0556e-02  3.1944e-02
  3.3333e-02  3.4722e-02  3.6111e-02  3.7500e-02  3.8889e-02  4.0278e-02
  4.1667e-02  4.3056e-02  4.4444e-02  4.5833e-02  4.7222e-02  4.8611e-02
  5.0000e-02  5.1389e-02  5.2778e-02  5.4167e-02  5.5556e-02  5.6944e-02
  5.8333e-02  5.9722e-02  6.1111e-02  6.2500e-02  6.3889e-02  6.5278e-02
  6.6667e-02  6.8056e-02  6.9444e-02  7.0833e-02  7.2222e-02  7.3611e-02
  7.5000e-02  7.6389e-02  7.7778e-02  7.9167e-02  8.0556e-02  8.1944e-02
  8.3333e-02  8.4722e-02  8.6111e-02  8.7500e-02  8.8889e-02  9.0278e-02
  9.1667e-02  9.3056e-02  9.4444e-02  9.5833e-02  9.7222e-02  9.8611e-02
  1.0000e-01  1.0139e-01  1.0278e-01  1.0417e-01  1.0556e-01  1.0694e-01
  1.0833e-01  1.0972e-01  1.1111e-01  1.1250e-01  1.1389e-01  1.1528e-01
  1.1667e-01  1.1806e-01  1.1944e-01  1.2083e-01  1.2222e-01  1.2361e-01
  1.2500e-01
/ Material Zone by Space Mesh
8$$
91r1 19r2 2r3 9r4 5r5 77r6 1r7
7q204
92r1 18r2 2r3 9r4 5r5 77r6 1r7
7q204
93r1 17r2 2r3 9r4 5r5 77r6 1r7
7q204
94r1 16r2 2r3 9r4 5r5 77r6 1r7
7q204
95r1 15r2 2r3 9r4 5r5 77r6 1r7
2q204
```

```
96r1 14r2 2r3 9r4 5r5 77r6 1r7
2q204
97r1 13r2 2r3 9r4 5r5 77r6 1r7
2q204
98r1 12r2 2r3 9r4 5r5 77r6 1r7
2q204
99r1 11r2 2r3 9r4 5r5 77r6 1r7
2q204
100r1 10r2 2r3 9r4 5r5 77r6 1r7
2q204
101r1 9r2 2r3 9r4 5r5 77r6 1r7
2q204
102r1 8r2 2r3 9r4 5r5 77r6 1r7
2q204
103r1 7r2 2r3 9r4 5r5 77r6 1r7
2q204
104r1 6r2 2r3 9r4 5r5 77r6 1r7
1q204
105r1 5r2 2r3 9r4 5r5 77r6 1r7
106r1 4r2 2r3 9r4 5r5 77r6 1r7
105r1 5r2 2r3 9r4 5r5 77r6 1r7
103r1 7r2 2r3 9r4 5r5 77r6 1r7
101r1 9r2 2r3 9r4 5r5 77r6 1r7
99r1 11r2 2r3 9r4 5r5 77r6 1r7
98r1 12r2 2r3 9r4 5r5 77r6 1r7
97r1 13r2 2r3 9r4 5r5 77r6 1r7
96r1 14r2 2r3 9r4 5r5 77r6 1r7
94r1 16r2 2r3 9r4 5r5 77r6 1r7
93r1 17r2 2r3 9r4 5r5 77r6 1r7
92r1 18r2 2r3 9r4 5r5 77r6 1r7
91r1 19r2 2r3 9r4 5r5 77r6 1r7
89r1 21r2 2r3 9r4 5r5 77r6 1r7
88r1 22r2 2r3 9r4 5r5 77r6 1r7
87r1 23r2 2r3 9r4 5r5 77r6 1r7
86r1 24r2 2r3 9r4 5r5 77r6 1r7
85r1 25r2 2r3 9r4 5r5 77r6 1r7
84r1 26r2 2r3 9r4 5r5 77r6 1r7
83r1 27r2 2r3 9r4 5r5 77r6 1r7
1q204
82r1 28r2 2r3 9r4 5r5 77r6 1r7
81r1 29r2 2r3 9r4 5r5 77r6 1r7
80r1 30r2 2r3 9r4 5r5 77r6 1r7
79r1 31r2 2r3 9r4 5r5 77r6 1r7
1q204
78r1 32r2 2r3 9r4 5r5 77r6 1r7
1q204
77r1 33r2 2r3 9r4 5r5 77r6 1r7
/ Material Number by Zone
9$$
 118  81   1  81  21  25  81
/ Mixture ID Numbers
10$$
 6r118  6r119  6r120  6r121
 2r122  2r123  2r124  2r125
/ Mixture Component ID Numbers
```

```
11$$
 49 57 5 65 69 81
 50 58 6 66 70 82
 51 59 7 67 71 83
 52 60 8 68 72 84
 21 81
 22 82
 23 83
 24 84
/ Mixture Component Volume Fractions
12**
 0.1908 0.0587 0.0278 0.0146 0.0073 0.7008
3q6
 0.1360 0.8640
3q2
/ Iteration Limit by Energy Group
28$$
45r40  2r150  20r30
  t
/ Spatial Distribution of the Source
96**
204r1.0e-15
18q204
203r1.0e-15  1.0
204r1.0e-15
69q204
  t
/ Energy Distribution of the Source
98**
1.95e-06 8.01e-07 3.17e-07 2.61e-07 3.79e-07
7.59e-07 1.15e-06 1.44e-06 1.60e-06 1.83e-06
2.32e-06 2.93e-06 3.72e-06 4.63e-06 5.42e-06
6.19e-06 6.93e-06 7.66e-06 8.77e-06 1.10e-05
47r0.0
  t
```

Sample DORT Input File

```
W21 Transfer Cask r,z Model - Case 6 With Spacer Plates - Bounding Source
61$$
/ NTFLX  NTFOG  NTSIG  NTBSI  NTDSI
    0      0      8      0     10
/ NTFCI  NTIBI  NTIBO  NTNPR  NTDIR
    0      0      0      0      0
/ NTDSO  NTSCL  NTZNF
   11     16      0   e
62$$
/   IADJ   ISCTM     IZM      IM      JM  (01 - 05)
       0       3      24     112     529
/    IGM     IHT     IHS     IHM    MIXL  (06 - 10)
      67       3       4      70     116
/  NMESH     MTP     MTM   IDFAC      MM  (11 - 15)
       0     117     137       0     160
/ INGEOM     IBL     IBR     IBB     IBT  (16 - 20)
       1       1       0       0       0
/  ISRMX   IFXMI   IFXMF    MODE   KTYPE  (21 - 25)
       0      -1       0       3       0
/   IACC    KALF  IGTYPE  INPFXM  INPSRM  (26 - 30)
       1       1       0       0       0
/ NJNTSR  NINTSR  NJNTFX  NINTFX    IACT  (31 - 35)
       0       0       0       0       2
/   IRED   IPDB2  IFXPRT  ICSPRT   IDIRF  (36 - 40)
      24       0       1       1       0
/  JDIRF   JDIRL    NBUF  IEPSBZ  MINBLK  (41 - 45)
       0       0       0       0       0
/ MAXBLK    ISBT    MSBT    MSDM  IBFSCL  (46 - 50)
       0       1       1       1       1
/ INTSCL  ITMSCL   NOFIS  IFDB2Z    ISWP  (51 - 55)
       4       8       0       0       0
/  KEYJN   KEYIN  NSIGTP  NORPOS  NORMAT  (56 - 60)
     214     112       0       0       0
/ MSTMAX  NEGFIX  LOCOBJ  LCMOBJ  NKEYFX  (61 - 65)
       0       1   22600       0       0
/ NCNDIN    NEUT  ITALLY  NEUTAC   ISCTC  (66 - 70)
       4      47       0       0       0  e
63**
/        TMAX         XNF         EPS         EPP         EPV  (01 - 05)
     0.00e-00   1.857e+17    1.00e-04    1.00e-03    0.00e-00
/         EPF       EKOBJ        EVTH       EVCHM       EVMAX  (06 - 10)
     1.00e-03    1.00e-00    2.00e-01    1.50e-00    1.00e+01
/       EVKMX         EVI      DEVDKI      EVDELK      SORMIN  (11 - 15)
     1.00e-00    1.00e-00   -1.00e-00    3.00e-01    1.00e+01
/      CONACC      CONSCL      CONEPS      WSOLMN      WSOLII  (16 - 20)
     1.00e-00    1.00e-04    1.00e-02    0.00e-00   -1.50e-00
/      WSOLCN         ORF      FSNACC      FLXMIN      SMOOTH  (21 - 25)
     1.50e-00    6.00e-01    0.00e-00    1.00e-30    0.00e-00
/         EPO      EXTRCV       THETA        ESP1        ESP2  (26 - 30)
     0.00e-00    2.00e-01    9.00e-01    0.00e-00    0.00e-00  e
  t
  t
/ S16 full symmetric r,z quadrature
/ Quadrature Cosines Relative to the Radial axis
82*
 0 -21082- 5 0 -14907- 5 0 +14907- 5 0 -42164- 5 0 -39441- 5 0 -14907- 5
 0 +14907- 5 0 +39441- 5 0 -55777- 5 0 -53748- 5 0 -39441- 5 0 -14907- 5
 0 +14907- 5 0 +39441- 5 0 +53748- 5 0 -66667- 5 0 -64979- 5 0 -53748- 5
 0 -39441- 5 0 -14907- 5 0 +14907- 5 0 +39441- 5 0 +53748- 5 0 +64979- 5
 0 -76012- 5 0 -74536- 5 0 -64979- 5 0 -53748- 5 0 -39441- 5 0 -14907- 5
 0 +14907- 5 0 +39441- 5 0 +53748- 5 0 +64979- 5 0 +74536- 5 0 -84327- 5
 0 -82999- 5 0 -74536- 5 0 -64979- 5 0 -53748- 5 0 -39441- 5 0 -14907- 5
 0 +14907- 5 0 +39441- 5 0 +53748- 5 0 +64979- 5 0 +74536- 5 0 +82999- 5
 0 -91894- 5 0 -90676- 5 0 -82999- 5 0 -74536- 5 0 -64979- 5 0 -53748- 5
 0 -39441- 5 0 -14907- 5 0 +14907- 5 0 +39441- 5 0 +53748- 5 0 +64979- 5
```

```
 0 +74536- 5 0 +82999- 5 0 +90676- 5 0 -98883- 5 0 -97753- 5 0 -90676- 5
 0 -82999- 5 0 -74536- 5 0 -64979- 5 0 -53748- 5 0 -39441- 5 0 -14907- 5
 0 +14907- 5 0 +39441- 5 0 +53748- 5 0 +64979- 5 0 +74536- 5 0 +82999- 5
 0 +90676- 5 0 +97753- 5 0 -21082- 5 0 -14907- 5 0 +14907- 5 0 -42164- 5
 0 -39441- 5 0 -14907- 5 0 +14907- 5 0 +39441- 5 0 -55777- 5 0 -53748- 5
 0 -39441- 5 0 -14907- 5 0 +14907- 5 0 +39441- 5 0 +53748- 5 0 -66667- 5
 0 -64979- 5 0 -53748- 5 0 -39441- 5 0 -14907- 5 0 +14907- 5 0 +39441- 5
 0 +53748- 5 0 +64979- 5 0 -76012- 5 0 -74536- 5 0 -64979- 5 0 -53748- 5
 0 -39441- 5 0 -14907- 5 0 +14907- 5 0 +39441- 5 0 +53748- 5 0 +64979- 5
 0 +74536- 5 0 -84327- 5 0 -82999- 5 0 -74536- 5 0 -64979- 5 0 -53748- 5
 0 -39441- 5 0 -14907- 5 0 +14907- 5 0 +39441- 5 0 +53748- 5 0 +64979- 5
 0 +74536- 5 0 +82999- 5 0 -91894- 5 0 -90676- 5 0 -82999- 5 0 -74536- 5
 0 -64979- 5 0 -53748- 5 0 -39441- 5 0 -14907- 5 0 +14907- 5 0 +39441- 5
 0 +53748- 5 0 +64979- 5 0 +74536- 5 0 +82999- 5 0 +90676- 5 0 -98883- 5
 0 -97753- 5 0 -90676- 5 0 -82999- 5 0 -74536- 5 0 -64979- 5 0 -53748- 5
 0 -39441- 5 0 -14907- 5 0 +14907- 5 0 +39441- 5 0 +53748- 5 0 +64979- 5
 0 +74536- 5 0 +82999- 5 0 +90676- 5 0 +97753- 5
/ Quadrature Cosines Relative to the Axial Axis
83*
 3r-97753- 5 5r-90676- 5 7r-82999- 5 9r-74536- 511r-64979- 513r-53748- 5
15r-39441- 517r-14907- 5 3r+97753- 5 5r+90676- 5 7r+82999- 5 9r+74536- 5
11r+64979- 513r+53748- 515r+39441- 517r+14907- 5
/ Quadrature Weights
81*
 0 +    0+ 0 2r+13586- 6 0 +    0+ 0 0 +97681- 7 2r+97681- 7 0 +97681- 7
 0 +    0+ 0 0 +64738- 7 0 +50390- 7 2r+64738- 7 0 +50390- 7 0 +64738- 7
 0 +    0+ 0 0 +64634- 7 0 +71124- 7 0 +71124- 7 2r+64634- 7 0 +71124- 7
 0 +71124- 7 0 +64634- 7 0 +    0+ 0 0 +64634- 7 0 +14381- 7 0 +36342- 7
 0 +14381- 7 2r+64634- 7 0 +14381- 7 0 +36342- 7 0 +14381- 7 0 +64634- 7
 0 +    0+ 0 0 +64738- 7 0 +71124- 7 0 +36342- 7 0 +36342- 7 0 +71124- 7
 2r+64738- 7 0 +71124- 7 0 +36342- 7 0 +36342- 7 0 +71124- 7 0 +64738- 7
 0 +    0+ 0 0 +97681- 7 0 +50390- 7 0 +71124- 7 0 +14381- 7 0 +71124- 7
 0 +50390- 7 2r+97681- 7 0 +50390- 7 0 +71124- 7 0 +14381- 7 0 +71124- 7
 0 +50390- 7 0 +97681- 7 0 +    0+ 0 0 +13586- 6 0 +97681- 7 0 +64738- 7
 0 +64634- 7 0 +64634- 7 0 +64738- 7 0 +97681- 7 2r+13586- 6 0 +97681- 7
 0 +64738- 7 0 +64634- 7 0 +64634- 7 0 +64738- 7 0 +97681- 7 0 +13586- 6
 0 +    0+ 0 2r+13586- 6 0 +    0+ 0 0 +97681- 7 2r+97681- 7 0 +97681- 7
 0 +    0+ 0 0 +64738- 7 0 +50390- 7 2r+64738- 7 0 +50390- 7 0 +64738- 7
 0 +    0+ 0 0 +64634- 7 0 +71124- 7 0 +71124- 7 2r+64634- 7 0 +71124- 7
 0 +71124- 7 0 +64634- 7 0 +    0+ 0 0 +64634- 7 0 +14381- 7 0 +36342- 7
 0 +14381- 7 2r+64634- 7 0 +14381- 7 0 +36342- 7 0 +14381- 7 0 +64634- 7
 0 +    0+ 0 0 +64738- 7 0 +71124- 7 0 +36342- 7 0 +36342- 7 0 +71124- 7
 2r+64738- 7 0 +71124- 7 0 +36342- 7 0 +36342- 7 0 +71124- 7 0 +64738- 7
 0 +    0+ 0 0 +97681- 7 0 +50390- 7 0 +71124- 7 0 +14381- 7 0 +71124- 7
 0 +50390- 7 2r+97681- 7 0 +50390- 7 0 +71124- 7 0 +14381- 7 0 +71124- 7
 0 +50390- 7 0 +97681- 7 0 +    0+ 0 0 +13586- 6 0 +97681- 7 0 +64738- 7
 0 +64634- 7 0 +64634- 7 0 +64738- 7 0 +97681- 7 2r+13586- 6 0 +97681- 7
 0 +64738- 7 0 +64634- 7 0 +64634- 7 0 +64738- 7 0 +97681- 7 0 +13586- 6
  t
/ Axial Mesh Cell Boundaries
2**
-0.40 1i0.00 6i0.64 7i7.62 3i15.24 13i19.69 1i33.02 2i34.29 1i36.83
8i38.74 48.26 1i48.73 6i50.64 2i58.42 1i60.63 9i62.54 1i72.54
9i74.44 1i84.44 9i86.34 1i96.34 9i98.24 1i108.24 9i110.15 1i120.14
9i122.05 1i132.04 9i133.95 1i143.95 9i145.85 1i155.85 9i157.75
1i167.75 9i169.65 1i179.65 9i181.56 1i191.55 9i193.46 1i203.45
9i205.36 1i215.36 9i217.26 1i227.26 9i229.16 1i239.16 9i241.06
1i251.06 9i252.97 1i262.96 9i264.87 1i274.86 9i276.77 1i286.77
9i288.67 1i298.67 9i300.57 1i310.57 9i312.47 1i322.47 9i324.38
1i334.37 9i336.28 1i346.27 9i348.18 1i358.18 9i360.08 1i370.08
9i371.98 1i381.98 9i383.88 1i393.88 9i395.79 1i405.78 9i407.69
1i417.68 2i419.59 4i424.18 1i429.59 8i431.49 1i441.49   443.57
11i443.87 4i453.40 10i458.48 3i471.81 3i476.25 13i480.67
2i494.67 4i497.53 4i502.29 6i507.36 6i514.98 1i521.97 522.60 523.00
/ Radial Mesh Cell Boundaries
4**
72i0.00 4i70.95 4i77.79 1i82.23 1i83.82 1i85.09 8i87.00
3i95.76 6i99.57 1i107.19 107.82 108.22
```

```
/ Material Zone by Space Mesh
8$$
112r10
78r22 24r22 9r10 10
 1q112
78r21 24r22 9r10 10
 6q112
102r20 9r10 10
 7q112
83r5 2r5 2r12 15r5 9r10 10
 3q112
83r6 2r5 2r12 15r5 9r10 10
 13q112
83r6 2r5 2r12 2r5 9r8 4r5 7r9 2r5 10
 1q112
83r5 2r5 2r12 2r5 9r8 4r5 7r9 2r5 10
 2q112
73r2 10r11 2r5 2r12 2r5 9r8 4r5 7r9 2r5 10
 1q112
73r2 10r23 2r5 2r12 2r5 9r8 4r5 7r9 2r5 10
 8q112
73r3 10r23 2r5 2r12 2r5 9r8 4r5 7r9 2r5 10
73r3 10r11 2r5 2r12 2r5 9r8 4r5 7r9 2r5 10
 1q112
73r3 10r23 2r5 2r12 2r5 9r8 4r5 7r9 2r5 10
 6q112
73r1 10r23 2r5 2r12 2r5 9r8 4r5 7r9 2r5 10
 2q112
73r1 10r11 2r5 2r12 2r5 9r8 4r5 7r9 2r5 10
 1q112
73r1 10r23 2r5 2r12 2r5 9r8 4r5 7r9 2r5 10
 9q112
 29q1344
73r1 10r11 2r5 2r12 2r5 9r8 4r5 7r9 2r5 10
 1q112
73r1 10r23 2r5 2r12 2r5 9r8 4r5 7r9 2r5 10
 2q112
73r3 10r23 2r5 2r12 2r5 9r8 4r5 7r9 2r5 10
 4q112
73r3 10r11 2r5 2r12 2r5 9r8 4r5 7r9 2r5 10
 1q112
73r3 10r23 2r5 2r12 2r5 9r8 4r5 7r9 2r5 10
 8q112
73r3 10r11 2r5 2r12 2r5 9r8 4r5 7r9 2r5 10
 1q112
73r3 10r23 2r5 2r12 2r5 9r8 4r5 7r9 2r5 10
73r4 10r23 2r5 2r12 2r5 9r8 4r5 7r9 2r5 10
 11q112
73r4 10r7  2r5 2r12 2r5 9r8 4r5 7r9 2r5 10
 4q112
73r24 10r23 2r5 2r12 2r5 9r8 4r5 7r9 2r5 10
 10q112
73r24 10r23 2r5 2r13 2r5 9r8 4r5 7r9 2r5 10
 3q112
83r6 2r5 2r13 2r5 9r8 4r5 7r9 2r5 10
 3q112
83r6 2r5 2r13 15r5 9r10 10
 13q112
83r14 2r5 2r13 15r5 9r10 10
 2q112
83r15 2r5 2r13 15r5 9r10 10
 4q112
85r16 2r13 15r5 9r10 10
 4q112
102r17 9r10 10
 6q112
87r18 15r10 9r10 10
 6q112
```

```
87r19 15r10 9r10 10
 1q112
112r10
/ Material Number by Zone
9$$
 118 122 126 130 1 21 1 33 73 81 21 81
 81 1 1 81 1 41 1 1 41 1 81 134
/ Mixture ID Numbers
10$$
 6r118 6r119 6r120 6r121
 6r122 6r123 6r124 6r125
 5r126 5r127 5r128 5r129
 6r130 6r131 6r132 6r133
 6r134 6r135 6r136 6r137
/ Nuclide ID Numbers
11$$
 49 57  5 65 69 73
 50 58  6 66 70 74
 51 59  7 67 71 75
 52 60  8 68 72 76
  1 17  5 65 69 73
  2 18  6 66 70 74
  3 19  7 67 71 75
  4 20  8 68 72 76
 57  5 65 69 73
 58  6 66 70 74
 59  7 67 71 75
 60  8 68 72 76
  1 17  5 65 69 73
  2 18  6 66 70 74
  3 19  7 67 71 75
  4 20  8 68 72 76
  1 17  5 65 69 73
  2 18  6 66 70 74
  3 19  7 67 71 75
  4 20  8 68 72 76
/ Nuclide Volume Fractions
12**
 0.1886  0.0580  0.0275  0.0144  0.0072  0.0000
3q6
 0.1203  0.0184  0.0275  0.0144  0.0072  0.0000
3q6
 0.0580  0.0275  0.0144  0.0072  0.0000
3q5
 0.1015  0.0200  0.0275  0.0144  0.0072  0.0000
3q6
 0.0000  0.0000  0.0275  0.0144  0.0072  0.0000
3q6
/ Material Number for Response Functions
25$$
  2r -117
/ Table Position for Response Functions
/ Position 7   Neutron Dose Rate (rem/hr)
/ Position 8   Photon  Dose Rate (rem/hr)
26$$
  7  8
/ Iteration Limit by Energy Group
28$$
45r30  2r100  20r10
 t
```

Sample FALSTF Input File

```
/ W21 Transfer Cask - Case6 With Spacers
1$$
    11      0      0
2$$
    63     47     12
  t
/Response Function Multiplier - Converts rem/hr to mrem/hr
26**
  63r1000.0
/Neutron and Photon Dose Rate Response Functions [rem/hr]/[p/cm2-s]
27**
 2.14e-04 1.96e-04 1.64e-04 1.47e-04 1.47e-04 1.48e-04 1.54e-04 1.49e-04
 1.37e-04 1.31e-04 1.27e-04 1.25e-04 1.25e-04 1.26e-04 1.26e-04 1.27e-04
 1.29e-04 1.30e-04 1.26e-04 1.16e-04 1.08e-04 9.74e-05 8.14e-05 6.42e-05
 4.78e-05 3.08e-05 1.99e-05 1.34e-05 9.83e-06 8.22e-06 7.36e-06 6.87e-06
 5.78e-06 3.87e-06 3.57e-06 3.64e-06 3.75e-06 3.95e-06 4.09e-06 4.25e-06
 4.43e-06 4.56e-06 4.58e-06 4.51e-06 4.36e-06 4.08e-06 3.67e-06
 1.10e-05 8.77e-06 7.66e-06 6.93e-06 6.19e-06 5.42e-06 4.63e-06 3.72e-06
 2.93e-06 2.32e-06 1.83e-06 1.60e-06 1.44e-06 1.15e-06 7.59e-07 3.79e-07
 2.61e-07 3.17e-07 8.01e-07 1.95e-06
/Detector Points
/         Top of Closed Cask to Two Meters
/         Side to Two Meters
/         Bottom of Cask to Two Meters
/Radial Coordinates of Detector Points
42**
  21r 0.49
  108.02 117.82 127.82 137.82 147.82 157.82 167.82 177.82 187.82 197.82
  207.82 217.82 227.82 237.82 247.82 257.82 267.82 277.82 287.82 297.82
  307.82
  21r 0.49
/Axial Coordinates of Detector Points
44**
 522.8 532.6 542.6 552.6 562.6 572.6 582.6 592.6 602.6 612.6 622.6
 632.6 642.6 652.6 662.6 672.6 682.6 692.6 702.6 712.6 722.6
 21r 240.59
 -0.20 -10.0 -20.0 -30.0 -40.0 -50.0 -60.0 -70.0 -80.0 -90.0 -100.0
 -110.0 -120.0 -130.0 -140.0 -150.0 -160.0 -170.0 -180.0 -190.0 -200.0
t
```

5.5.6 Calculation of Dose Rate Adjustment Factors

As discussed in Section 5.1.3, the storage and transfer cask shielding analyses model a W21 canister inside the W100 transfer cask and the W150 storage cask. The modeled W21 canister contains a bounding fuel payload based on 36 GWd/MTU, 4.5% enriched, 4 year cooled PWR fuel (see Section 5.2.2.1).

However, in some cases, and for some detector locations, the W74 canister or a W21 canister loaded with high burnup fuel may produce higher total dose rates. For this reason, as discussed in Section 5.1.3, adjustment factors are applied to the dose rates calculated by the shielding analysis to ensure that the final presented dose rates are bounding for all canister types and allowable fuel payloads. The adjustment factors are presented in Table 5.1-3. The calculation of these adjustment factors is described in this section.

A set of R-Z shielding calculations are performed to calculate gamma and neutron dose rates on the transfer and storage cask side, top, and bottom surfaces for the high burnup W21 canister case and for the W74 canister case, as well as for the design basis W21 canister case. The dose rates calculated for the two alternate cases are compared to the dose rates calculated for the design basis W21 canister case.

For each cask surface region, a gamma and neutron dose rate adjustment factor for each of the two alternate cases is determined. The adjustment factor is simply the alternate case dose rate divided by the design basis case dose rate. Adjustment factors are determined for the transfer cask side, top, and bottom, and for the storage cask top and bottom. No adjustments are necessary for the storage cask side, since the cooling table shielding calculations (discussed in the W21 and W74 canister FSARs) calculate the storage cask side dose rate for each canister type and fuel payload, and limit that dose rate to 50 mrem/hr.

5.5.6.1 Shielding Model Geometry

Four shielding model geometries are used in this calculation, i.e., the W21 and W74 canisters inside the storage and transfer casks. These four geometries are presented in Figure 5.5-1 through Figure 5.5-4. The modeled W21 canister geometry is identical to the design basis geometry shown in Figure 5.3-4, except that, for simplicity, the canister edge spacer plate rings are not modeled. The W74 canister model also neglects the canister spacer plate steel in the basket edge region. This approximation does not affect the calculated dose rate ratios because the plates are removed for both the alternate cases and the design basis case. Since the effects of the plates are similar (and fairly small) for all of the analyzed cases, the dose rate ratios between the cases is not significantly affected.

Another difference between the transfer cask models used in these calculations (shown in Figure 5.5-3 and Figure 5.5-4) and the design basis shielding models presented in Section 5.3 is that the neutron shield outer skin thickness is modeled as 0.5 inches as opposed to the actual value of 0.25 inches (shown in Figure 5.3-3). However, as discussed above, this 0.25-inch change in the metal thickness will have a relatively small effect on both the alternate cases and the design basis (W21) case. Therefore, the calculated transfer cask side gamma dose rate ratios (alternate / design basis) are not significantly affected.

As shown in Figure 5.5-1 through Figure 5.5-4, the canister interior is divided into several sub-regions. The edge region of the canister interior is conservatively filled with void, as opposed to discretely modeled spacer plates. Inside the (annular) canister edge region is the (cylindrical) canister source region. The source region is sub-divided into four axial source zones: a fuel zone, a gas plenum zone, a bottom nozzle zone, and a top nozzle zone. The W74 canister has two levels, each containing fuel assemblies. Each of these levels is divided into four axial assembly source zones, for a total of 8 axial zones (with a two-inch steel separator plate between the two levels).

These axial source regions are each filled with a homogenous mass of material. The homogenous material densities are based on the major assembly and basket components present in each axial zone. The spacer plate steel is conservatively neglected in all of the homogenous material density calculations. The homogenous material description includes the guide tube steel, the poison sheet material, and poison sheet wrapper material (if any). All other canister interior components and materials are conservatively neglected.

Since the guide tubes and poison sheets extend over the entire axial span of the canister interior, these basket structure materials are included in all axial zones. The assembly materials are added into the homogenous material description along with the basket component materials. In the core zone, the fuel (modeled as pure UO_2) and cladding material is included in the material description. In the gas plenum region, only the cladding is included. In the top and bottom nozzle regions, the metal masses of the assembly top and bottom nozzles are distributed evenly (axially and radially) throughout the region. The fuel and plenum zone UO_2 and zircaloy densities are based on upper bound UO_2 masses and lower bound zircaloy masses for PWR and BRP fuel.

The canister interior materials include: UO_2, zircaloy, SS-316 (guide tube steel), SS-304 (assembly nozzle steel), Inconel-718 (nozzles), aluminum (W21 BORAL cladding), BORAL core material (W21), and borated stainless steel (W74). The volume fractions for each of these materials within each canister interior axial zone in the W21 and W74 models are presented in Table 5.5-18. With the material volume fractions shown in Table 5.5-18, the shielding analyses model a homogenous mass that completely fills each corresponding canister interior sub-section.

For each analyzed case, gamma and neutron dose rates are calculated at the numbered locations shown in Figure 5.5-1 through Figure 5.5-4. On the cask sides, dose rates are calculated over the peak burnup section of the active fuel region, as well as over the assembly top and bottom nozzle regions. Dose rates are also calculated on the cask top and bottom end surfaces. The top and bottom dose rates are calculated at the cask centerline (i.e., at the lid center locations).

Due to the fact that the W74 canister has an empty region in the basket center (the five center fuel slots are empty), the W74 canister has an additional dose rate location at each cask end. Thus, the shielding analysis models an annular fuel and source region (as shown in Figure 5.5-2 and Figure 5.5-4). Detectors are placed over the center of the lids and directly over the center (average radius) of the modeled annular source region. The highest of the two calculated dose rates is then taken for each analyzed case.

5.5.6.2 Shielding Analysis Source Terms

A set of three R-Z shielding calculations are performed for the transfer cask and for the storage cask. The three analyzed cases are a W21 canister loaded with design basis PWR fuel

(36 GWd/MTU, 4.5% enriched, 4-year cooled), a W21 canister loaded with maximum burnup fuel (60 GWd/MTU, 4.0% enriched, 10-year cooled), and a W74 canister loaded with bounding Big Rock Point (BRP) fuel (36 GWd/MTU, 2.0% enriched, 4-year cooled).

The design basis PWR case corresponds to the case presented in Section 5.2. This set of PWR fuel parameters produces gamma source strengths equal to or greater than that of any allowable fuel payload for the W21 canister. This set of fuel parameters also produces the maximum neutron source strength among sets of fuel parameters (i.e., cooling table state-points) that produce maximum gamma source strengths.

The maximum burnup W21 case has the maximum allowable burnup level, a lower bound enrichment level (for that burnup level), and a cooling time that is somewhat lower than that allowed by the W21 cooling table for that combination of burnup and enrichment. Therefore, this set of fuel parameters yields an upper bound neutron source strength for all allowable W21 canister fuel payloads. Since the cooling time (given in the cooling table) is limited by thermal as opposed to radiological limits, the gamma source strength for this case is lower than that of the design basis W21 canister case.

The W74 canister case is based on a radiologically limited state-point in the cooling table, so its associated gamma source strengths are bounding for allowable W74 canister fuel payloads. Since it has a maximum burnup level, and a lower bound enrichment level for radiologically limited state-points, its neutron source strength is the highest that occurs for bounding gamma source strength (i.e., radiologically limited) cases. Since the W74 canister only allows fuel burnup levels up to 40 GWd/MTU, which is not significantly higher than the 36 GWd/MTU burnup level analyzed here, a separate maximum burnup case is not performed for the W74 canister.

The fuel region gamma source strengths used in these shielding analyses are presented in Table 5.5-19. Gamma source strengths are presented for the design basis W21 case, the maximum burnup W21 case, and the W74 case. The burnup, enrichment, and cooling time for each case are also presented in Table 5.5-19. The gamma source strengths are presented in the same BUGLE-93 group structure that is used for the design basis shielding analyses, as described in Section 5.2. The 1.25 MeV group gamma source strength includes gammas from activated core region assembly hardware. The added gamma source strength is based on upper bound core region cobalt quantities for PWR fuel and BRP fuel, respectively.

The total neutron source strength for each of the three analyzed cases is also presented in the bottom row of Table 5.5-19. Since the neutron energy spectrum does not vary significantly for spent fuel, the neutron energy spectrum shown in Table 5.2-9 is used for all three cases described in Table 5.5-19. The neutron source strengths used in the analyses have been adjusted upwards to account for axial burnup profile effects and the effects of sub-critical neutron multiplication.

The gamma and neutron source strength data presented in Table 5.5-19 for the design basis W21 canister case are identical to those shown for the design basis shielding analyses in Section 5.2. The fuel zone gamma and neutron source strengths are based on upper bound assembly uranium loadings of 0.471 MTU/assembly for PWR fuel (W21), and 0.138 MTU/assembly for BRP (W74) fuel.

The shielding analyses presented in this section also treat the effects of the axial burnup profile present in spent fuel. The axial variation in burnup creates a corresponding axial variation in the gamma and neutron source strength. The axial burnup profile varies between PWR and BWR

fuel, and it varies with the fuel burnup level. Thus, the axial burnup profile (and associated gamma and neutron source strength profiles) will differ for the three analyzed cases. Since the gamma source strength is roughly proportional to the burnup, the amount of axial peaking in the gamma source strength is similar to the amount of peaking in the burnup level. The neutron source strength, however, varies as the 4th power of the burnup level, so the amount of axial peaking in the neutron source strength is much greater than the degree of peaking in the burnup level. The normalized axial gamma and neutron source strength profiles are presented for the three analyzed cases in Table 5.5-20 through Table 5.5-22. The axial profiles shown for the design basis W21 case are identical to those shown for the design basis analyses in Section 5.2.

The shielding analyses also model the three non-fuel regions of the assembly (bottom nozzle, gas plenum, and top nozzle), and their associated gamma source terms. The gamma source strengths are entirely due to ^{60}Co and are evenly divided (i.e., an equal number of gammas) between two discrete gamma energy lines, 1.176 MeV and 1.333 MeV. The gamma source strengths of the non-fuel axial zones are presented in Table 5.5-23 for each of the three analyzed cases. The gamma source strengths shown for the design basis W21 case are identical to those shown in Table 5.2-7 for the design basis shielding analyses. The gamma source strengths are based on upper bound non-fuel region cobalt quantities for PWR fuel and BRP fuel, respectively.

As discussed in Section 5.2.2.2.2, a very conservative upper bound top nozzle gamma source strength is used in the design basis storage cask shielding analyses, whereas a more realistic upper bound top nozzle gamma source strength is used in the transfer cask shielding analyses. In these analyses as well, there is a difference in the top nozzle source strengths assumed in the storage and transfer cask shielding analyses (as shown in Table 5.5-23).

The fuel region gamma, fuel region neutron, and non-fuel region gamma source strengths presented for each analyzed case in this section are calculated using the same methodologies that are described in Section 5.2.

5.5.6.3 Shielding Calculation Results

Based on the shielding geometries described in Section 5.5.6.1, and the source strengths described in Section 5.5.6.2, gamma and neutron dose rates are calculated (at each detector location shown in Figure 5.5-1 through Figure 5.5-4) for the design basis W21 case, the high burnup W21 case, and the W74 case. The gamma dose rates are shown for each case in Table 5.5-24, and the neutron dose rates are shown in Table 5.5-25.

As discussed in Section 5.5.6.2, the fuel region gamma and neutron source strengths for the W74 canister case are based on a BRP fuel assembly uranium loading of 0.138 MTU/assembly. However, the BRP fuel specification currently allows uranium loadings up to 0.1421 MTU/assembly, 3% higher than the 0.138 value assumed in these shielding calculations. For this reason, the gamma and neutron dose rates presented in Table 5.5-24 and Table 5.5-25 have been adjusted upwards by 3% from the raw calculated values. This is a very conservative adjustment because it neglects any increased self-shielding effects from the increased uranium mass. In actuality, if self-shielding effects were accounted for, the expected dose rate increase would be ~1% for gammas and ~2% for neutrons.

The dose rate results show that for the W74 canister, the lid center dose rates always exceed the dose rates directly over the source region annulus. Therefore, as with the W21 canister, the lid

center top and bottom dose rates are used to compare with the design basis case and to establish the dose rate ratios.

Using the data from Table 5.5-24 and Table 5.5-25, the gamma and neutron dose rate ratios (vs. the design basis W21 case) are calculated. The storage cask top dose rate ratios are determined by dividing the location #1 dose rates for the high burnup W21 and W74 cases by that of the design basis W21 case. The storage cask bottom dose rate ratio is determined by comparing the location #5 dose rates. The transfer cask top, side, and bottom dose rate ratios are determined through comparison of dose rates at locations #11, #13, and #15, respectively. The resulting gamma and neutron dose rate ratios, for each of the five locations, are presented in Table 5.5-26.

Table 5.5-26 shows that the W74 case is clearly the bounding case for the storage cask top. Both the neutron and gamma ratios are above 1.0, so the total dose rate for the W74 case is clearly higher than that of the design basis W21 case. Also, comparison of the W74 dose rate ratios to that of the maximum burnup W21 case shows that the W74 case ratios are higher for both gammas and neutrons.

For the storage cask bottom, gammas account for virtually all of the dose rate (as shown in Table 5.1-1). As shown in Table 5.5-26, the gamma dose rate ratios for the high burnup W21 case and the W74 case are significantly below 1.0. Thus, the design basis W21 case produces the highest gamma dose rates at the storage cask bottom. Thus, since the gammas contribute virtually all of the dose rate at that location, the design basis W21 case produces the maximum overall dose rate at the storage cask bottom. Therefore, no adjustments are made to the raw storage cask bottom dose rates determined by the W21 design basis shielding analyses.

As discussed earlier in this section, dose rate ratios are not determined for the storage cask side, as the cooling tables limit cask side dose rates to 50 mrem/hr for all canister types and fuel payloads. Examination of the dose rates presented in Table 5.5-24 and Table 5.5-25 confirm this, as the total cask side dose rates for the design basis W21 and W74 cases are very close to (but just under) 50 mrem/hr. As expected, the cask side dose rate for the maximum burnup W21 case, which is a thermally limited point in the W21 canister cooling table, is well under 50 mrem/hr.

Thus, for the storage cask dose rates, only the cask top dose rates are adjusted. These dose rates are adjusted to correspond to the W74 canister case, which is bounding for that location. As noted in Table 5.1-1, the gamma and neutron dose rates for the storage cask top are multiplied by factors of 1.15 and 14.33, respectively. The storage cask top adjustment factors used in Table 5.1-1 do not reflect the 3% dose rate adjustment discussed earlier in this section and are 3% lower than those shown in Table 5.5-26. The 3% factor was not applied to the storage cask top case for the following reasons:

- The adjustment would only affect the top surface dose rates.
- The top surface dose rates are very low (just over 10 mrem/hr).
- The top surface dose rates are dominated by the gamma dose rate, which only increases ~1% (instead of 3%) due to increased self-shielding effects in the fuel zone.
- The assembly top nozzles, whose source strengths are not affected by the uranium loading increase, contribute a significant fraction of the cask top gamma dose rate (thus, the dose rate would increase by less than 1%).

- Dose rate variances of less than 1% are well below the level of statistical error in the shielding calculations.

Therefore, the 3% increase factor is not applied to the storage cask top. However, the 3% increase is applied to all transfer cask dose rates.

Unlike the storage cask, the transfer cask has several detector locations and several configurations during different periods of the loading operation. Therefore, different cases (design basis W21, maximum burnup W21, or W74) are bounding for different detector locations. Which case is bounding depends on whether gammas or neutrons dominate the total dose rate for the detector location in question, as well as on the dose rate ratios shown for each case in Table 5.5-26.

Table 5.5-27 shows a calculation of total dose rates for each detector location, based on the design basis W21 calculated dose rates shown in Table 5.1-3, and on the dose rate ratios shown in Table 5.5-26. The design basis W21 gamma and neutron dose rates are shown in the left columns. Then, using the dose rate ratios from Table 5.5-26, gamma and neutron dose rates are calculated for the maximum burnup W21 and the W74 cases. Dose rates are calculated for each detector location described in Table 5.1-2. The gamma and neutron dose rates are summed to yield total dose rates for the two alternate cases, as well as the design basis case. The total dose rates are then compared for each detector location. The case that yields the maximum total dose rate is then selected. The maximum total dose rates are shown in bold in Table 5.5-27. The maximum gamma and neutron dose rates correspond to those shown in the right columns of Table 5.1-3. The corresponding gamma and neutron dose rate ratios (for the case which yielded the highest total dose rate) are equal to those shown in Table 5.1-3.

Thus, the data shown in Table 5.5-24 through Table 5.5-27 give the basis and justification for the dose rate adjustments presented in Table 5.1-3. As shown in this section, the dose rate adjustments that are applied produce dose rates that are bounding (for each detector location) for all FuelSolutions™ canister types and all allowable fuel payloads.

Table 5.5-18 - Summary of Canister Interior Material Volume Fractions

Material Type	Canister Axial Zone	W21	W74
UO_2	Fuel	0.1886	0.1925[(1)]
Zircaloy	Fuel & Plenum	0.0580	0.0772[(1)]
SS-304	Bottom Nozzle	0.1203	0.1070[(1)]
Inc-718	Bottom Nozzle	0.0184	-
SS-304	Top Nozzle	0.0458	0.0313[(1)]
Inc-718	Top Nozzle	0.0090	0.0070[(1)]
SS-316	All	0.0275	0.0365
BORAL Core	All	0.0144	N/A
Aluminum	All	0.0072	N/A
Borated Stainless	All	N/A	0.0102

Note:

(1) The listed volume fractions only apply within the annular source region. In the cylindrical region in the center of the W74 canisters, these material volume fractions are set to zero. The other listed material volume fractions remain the same in that region.

Table 5.5-19 - Final Fuel Region Radiation Source Strengths (particles/sec-canister)

BUGLE-93 Group	Average Energy (MeV)	Gamma Source Strength		
		Design Basis W21 Case 36 GWd/MTU 4.5% Enriched 4 Year Cooled	Max. Burnup W21 Case 60 GWd/MTU 4.0% Enriched 10 Year Cooled	W74 Case 36 GWd/MTU 2.0% Enriched 4 Year Cooled
48	12.00	0.00E+00	0.00E+00	0.00E+00
49	9.00	7.38E+05	1.11E+07	7.46E+06
50	7.50	2.98E+06	4.49E+07	3.01E+07
51	6.50	3.44E+06	5.18E+07	3.47E+07
52	5.50	2.51E+07	3.77E+08	2.53E+08
53	4.50	3.07E+07	4.61E+08	3.09E+08
54	3.50	3.19E+11	1.19E+10	3.64E+11
55	2.50	1.32E+14	1.14E+12	7.76E+13
56	1.75	1.10E+14	7.06E+13	1.30E+14
57	1.25(1)	4.53E+15	3.72E+15	4.84E+15
58	0.90	9.51E+15	4.53E+15	1.16E+16
59	0.75	5.69E+15	2.71E+15	6.91E+15
60	0.65	2.18E+16	2.14E+16	2.17E+16
61	0.50	4.16E+16	4.04E+16	4.13E+16
62	0.30	5.39E+15	2.88E+15	4.32E+15
63	0.15	8.82E+15	5.36E+15	7.12E+15
64	0.08	9.76E+15	6.08E+15	7.63E+15
65	0.05	1.79E+16	1.29E+16	1.42E+16
66	0.03	1.12E+16	6.79E+15	8.77E+15
67	0.02	4.82E+16	3.26E+16	3.68E+16
Total Neutron Source		4.889E+09	3.538E+10	1.948E+10

Note:

(1) Includes additional gamma source from activated core region assembly hardware.

Table 5.5-20 - Axial Gamma and Neutron Source Strength Profiles
(design basis W21 case)

Percent Fuel Height	Relative γ Source Str.	Relative n Source Str.[1]
2.78	0.585	0.099
8.33	0.957	0.710
13.89	1.091	1.199
19.44	1.121	1.337
25.00	1.126	1.361
30.56	1.111	1.290
36.11	1.094	1.213
41.67	1.093	1.208
47.22	1.092	1.204
52.78	1.091	1.199
58.33	1.092	1.204
63.89	1.099	1.235
69.44	1.096	1.221
75.00	1.087	1.182
80.56	1.073	1.122
86.11	1.003	0.857
91.67	0.796	0.340
97.22	0.393	0.020

Note:

(1) Relative neutron source strength values are calculated by raising the relative burnup values to the 4th power, and then re-normalizing the profile.

Table 5.5-21 - Axial Gamma and Neutron Source Strength Profiles
(maximum burnup W21 case)

Percent Fuel Height	Relative γ Source Str.	Relative n Source Str.[1]
2.78	0.573	0.094
8.33	0.917	0.614
13.89	1.066	1.121
19.44	1.106	1.299
25.00	1.114	1.337
30.56	1.111	1.323
36.11	1.106	1.299
41.67	1.101	1.276
47.22	1.097	1.257
52.78	1.093	1.239
58.33	1.089	1.221
63.89	1.086	1.207
69.44	1.081	1.185
75.00	1.073	1.151
80.56	1.051	1.059
86.11	0.993	0.844
91.67	0.832	0.416
97.22	0.512	0.060

Notes:

(1) Relative neutron source strength values are calculated by raising the relative burnup values to the 4th power, and then re-normalizing the profile.

Table 5.5-22 - Axial Gamma and Neutron Source Strength Profiles (W74 case)

Percent Fuel Height	Relative γ Source Str.	Relative n Source Str.[1]
2.1	0.23	0.002
6.3	0.77	0.265
10.4	0.99	0.724
14.6	1.09	1.064
18.8	1.13	1.229
22.9	1.16	1.364
27.1	1.17	1.412
31.3	1.18	1.461
35.4	1.18	1.461
39.6	1.18	1.461
43.8	1.18	1.461
47.9	1.18	1.461
52.1	1.18	1.461
56.3	1.17	1.412
60.4	1.16	1.364
64.6	1.14	1.273
68.8	1.12	1.186
72.9	1.10	1.103
77.1	1.07	0.988
81.3	1.02	0.816
85.4	0.94	0.588
89.6	0.81	0.324
93.8	0.63	0.119
97.9	0.23	0.002

Note:

(1) Relative neutron source strength values are calculated by raising the relative burnup values to the 4th power, and then re-normalizing the profile.

Table 5.5-23 - Assembly Non-Fuel Region Gamma Source Strengths

Assembly Hardware Component	Gamma Source Strength (gammas/sec-canister)		
	Design Basis W21 Case	Max. Burnup W21 Case	W74 case
Total Top Nozzle Region Hardware (transfer cask case)	4.126×10^{14}	2.320×10^{14}	3.197×10^{14}
Total Top Nozzle Region Hardware (storage cask case)	7.579×10^{14}	4.262×10^{14}	3.197×10^{14}
Total Gas Plenum Region Hardware (transfer cask case)	2.922×10^{14}	1.643×10^{14}	4.262×10^{12}
Total Gas Plenum Region Hardware (storage cask case)	3.304×10^{14}	1.858×10^{14}	4.262×10^{12}
Bottom Nozzle Assembly Hardware (transfer cask case)	4.835×10^{14}	2.719×10^{14}	1.279×10^{14}
Bottom Nozzle Assembly Hardware (storage cask case)	4.835×10^{14}	2.719×10^{14}	1.279×10^{14}

Table 5.5-24 - Comparison of Total Storage and Transfer Cask Gamma Dose Rates

Detector Location[1]	Total Gamma Dose Rate (mrem/hr)		
	Design Basis W21	Max. Burnup W21	W74[2]
1	7.8	8.1	9.1
2	56.2	31.4	16.4
3	48.8	22.7	47.5
4	30.8	15.8	29.8
5	3530.8	2002.4	1232.4
6	-	-	9.2
7	-	-	218.2
11	12.0	9.9	10.7
12	600.6	359.9	252.7
13	459.1	363.0	634.5
14	520.7	319.2	284.8
15	93.7	58.2	48.8
16	-	-	8.5
17	-	-	25.9

Notes:

(1) Illustrated in Figure 5.5-1 through Figure 5.5-4. Locations 1-7 are storage cask locations. Locations 11-17 are transfer cask locations.

(2) W74 gamma dose rates are adjusted upwards by a factor of 1.03, as discussed in Section 5.5.6.3.

Table 5.5-25 - Comparison of Total Storage and Transfer Cask Neutron Dose Rates

Detector Location[1]	Total Neutron Dose Rate (mrem/hr)		
	W21 Bounding	W21 Max. Burnup	W74[2]
1	0.3	2.4	4.4
2	0.0	0.1	0.1
3	0.1	0.8	0.5
4	0.0	0.1	0.2
5	114.0	769.2	1153.8
6	-	-	2.9
7	-	-	180.3
11	3.8	30.1	57.9
12	5.9	46.8	51.9
13	78.6	567.0	355.4
14	12.7	85.7	124.6
15	13.0	86.7	165.8
16	-	-	36.3
17	-	-	95.3

Notes:

(1) Illustrated in Figure 5.5-1 through Figure 5.5-4. Locations 1-7 are storage cask locations. Locations 11-17 are transfer cask locations.

(2) W74 neutron dose rates are adjusted upwards by a factor of 1.03, as discussed in the Section 5.5.6.3 text.

Table 5.5-26 - Gamma and Neutron Dose Ratios for Alternate Canisters and Fuel Payloads (vs. Design Basis W21 Case)[1]

Location	W21 Max. Burnup		W74	
	γ	n	γ	n
Storage Cask Top	1.05	7.85	1.17[2]	14.38[2]
Storage Cask Bottom	0.57	6.75	0.35	10.12
Transfer Cask Top	0.83	7.98	0.90	15.35
Transfer Cask Side	0.79	7.21	1.38	4.52
Transfer Cask Bottom	0.62	6.67	0.52	12.76

Notes:

(1) Dose rate ratios are determined at detector locations #1, #5, #11, #13, and #15. The W74 dose rate results given in Table 5.5-17 and Table 5.5-18 show that the dose rates at locations #1, #5, #11, and #15 bound those shown at locations #6, #7, #16, and #17.

(2) Factors of 1.15 (gamma) and 14.33 (neutron) are used in the storage cask dose rate calculations, as discussed in Section 5.5.6.3.

Table 5.5-27 - Dose Rates (mR/hr) by Detector Location for Various Canister Types and Fuel Payloads

Dose Loc.[1]	W21 - Bounding			W21 - Max. BU			W74 - Bounding		
	γ	n	Tot	γ	n	Tot	γ	n	Tot
1a	1.54E+02	1.37E+00	1.55E+02	1.22E+02	9.88E+00	1.32E+02	**2.13E+02**	**6.19E+00**	**2.19E+02**
1b	3.62E+02	3.99E+01	4.02E+02	2.86E+02	2.88E+02	5.74E+02	**5.00E+02**	**1.80E+02**	**6.80E+02**
1c	3.95E+02	6.21E+01	4.57E+02	3.12E+02	4.48E+02	7.60E+02	**5.45E+02**	**2.81E+02**	**8.26E+02**
1d	2.17E+02	1.04E+01	2.27E+02	1.71E+02	7.50E+01	2.46E+02	**2.99E+02**	**4.70E+01**	**3.46E+02**
1e	5.27E+02	8.82E+02	1.41E+03	**4.16E+02**	**6.36E+03**	**6.78E+03**	7.27E+02	3.99E+03	4.71E+03
2a	6.99E+01	4.70E-01	7.04E+01	5.52E+01	3.39E+00	5.86E+01	**9.65E+01**	**2.12E+00**	**9.86E+01**
2b	1.63E+02	1.38E+01	1.77E+02	1.29E+02	9.95E+01	2.28E+02	**2.25E+02**	**6.24E+01**	**2.87E+02**
2c	1.77E+02	2.16E+01	1.99E+02	1.40E+02	1.56E+02	2.96E+02	**2.44E+02**	**9.76E+01**	**3.42E+02**
2d	9.97E+01	3.27E+00	1.03E+02	7.88E+01	2.36E+01	1.02E+02	**1.38E+02**	**1.48E+01**	**1.52E+02**
2e	2.44E+02	2.86E+02	5.30E+02	**1.93E+02**	**2.06E+03**	**2.25E+03**	3.37E+02	1.29E+03	1.63E+03
3a	**1.50E+03**	**5.41E-05**	**1.50E+03**	1.24E+03	4.32E-04	1.24E+03	1.35E+03	8.30E-04	1.35E+03
3b	**3.16E+03**	**1.45E-03**	**3.16E+03**	2.62E+03	1.16E-02	2.62E+03	2.84E+03	2.23E-02	2.84E+03
3c	**1.01E+02**	**2.62E-04**	**1.01E+02**	8.38E+01	2.09E-03	8.38E+01	9.09E+01	4.02E-03	9.09E+01
3d	3.64E+02	1.23E+01	3.76E+02	3.02E+02	9.82E+01	4.00E+02	**3.28E+02**	**1.89E+02**	**5.16E+02**
3e	4.64E+01	7.76E+00	5.42E+01	3.85E+01	6.19E+01	1.00E+02	**4.18E+01**	**1.19E+02**	**1.61E+02**
3f	1.05E+01	3.51E+00	1.40E+01	8.72E+00	2.80E+01	3.67E+01	**9.45E+00**	**5.39E+01**	**6.33E+01**
3g	4.44E+02	6.92E+01	5.13E+02	3.69E+02	5.52E+02	9.21E+02	**4.00E+02**	**1.06E+03**	**1.46E+03**
4a	**1.31E+03**	**3.55E-04**	**1.31E+03**	1.09E+03	2.83E-03	1.09E+03	1.18E+03	5.45E-03	1.18E+03
4b	**6.23E+01**	**1.06E-04**	**6.23E+01**	5.17E+01	8.46E-04	5.17E+01	5.61E+01	1.63E-03	5.61E+01
4c	2.35E+02	5.03E+00	2.40E+02	1.95E+02	4.01E+01	2.35E+02	**2.12E+02**	**7.72E+01**	**2.89E+02**
4d	5.43E+01	3.36E+00	5.77E+01	4.51E+01	2.68E+01	7.19E+01	**4.89E+01**	**5.16E+01**	**1.00E+02**
4e	4.92E+00	1.14E+00	6.06E+00	4.08E+00	9.10E+00	1.32E+01	**4.43E+00**	**1.75E+01**	**2.19E+01**
4f	5.81E+01	5.65E+00	6.38E+01	4.82E+01	4.51E+01	9.33E+01	**5.23E+01**	**8.67E+01**	**1.39E+02**
5a	9.38E+01	1.28E+01	1.07E+02	5.82E+01	8.54E+01	1.44E+02	**4.88E+01**	**1.63E+02**	**2.12E+02**
5b	4.56E+03	1.95E+02	4.76E+03	2.83E+03	1.30E+03	4.13E+03	**2.37E+03**	**2.49E+03**	**4.86E+03**
6a	4.21E+01	5.05E+00	4.72E+01	2.61E+01	3.37E+01	5.98E+01	**2.19E+01**	**6.44E+01**	**8.63E+01**
6b	**1.98E+03**	**5.00E+01**	**2.03E+03**	1.23E+03	3.34E+02	1.56E+03	1.03E+03	6.38E+02	1.67E+03

Note:

(1) Detector locations are described in Table 5.1-2.

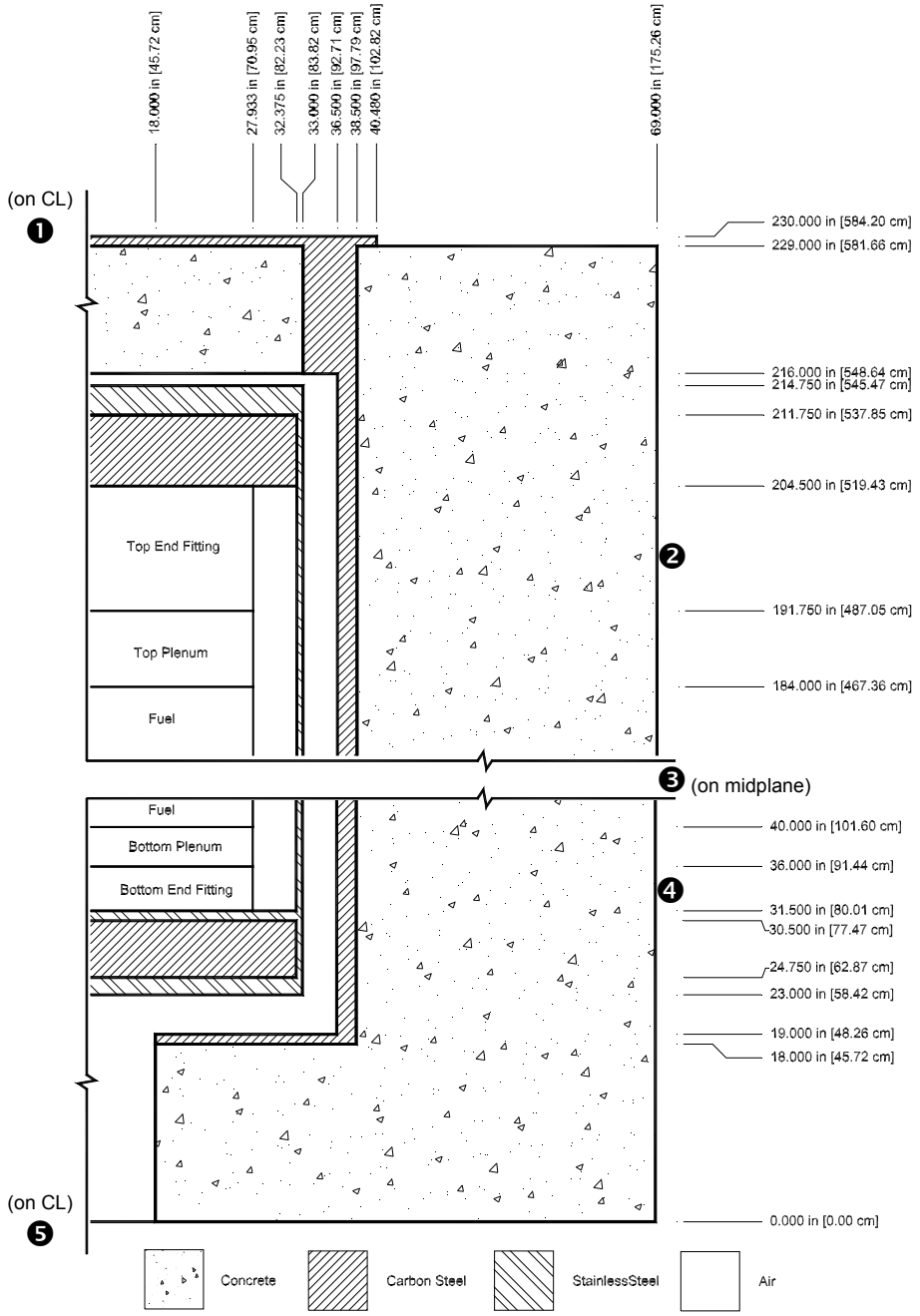

Figure 5.5-1 - DORT R-Z Model Geometry for the W21 Canister in the W150 Storage Cask

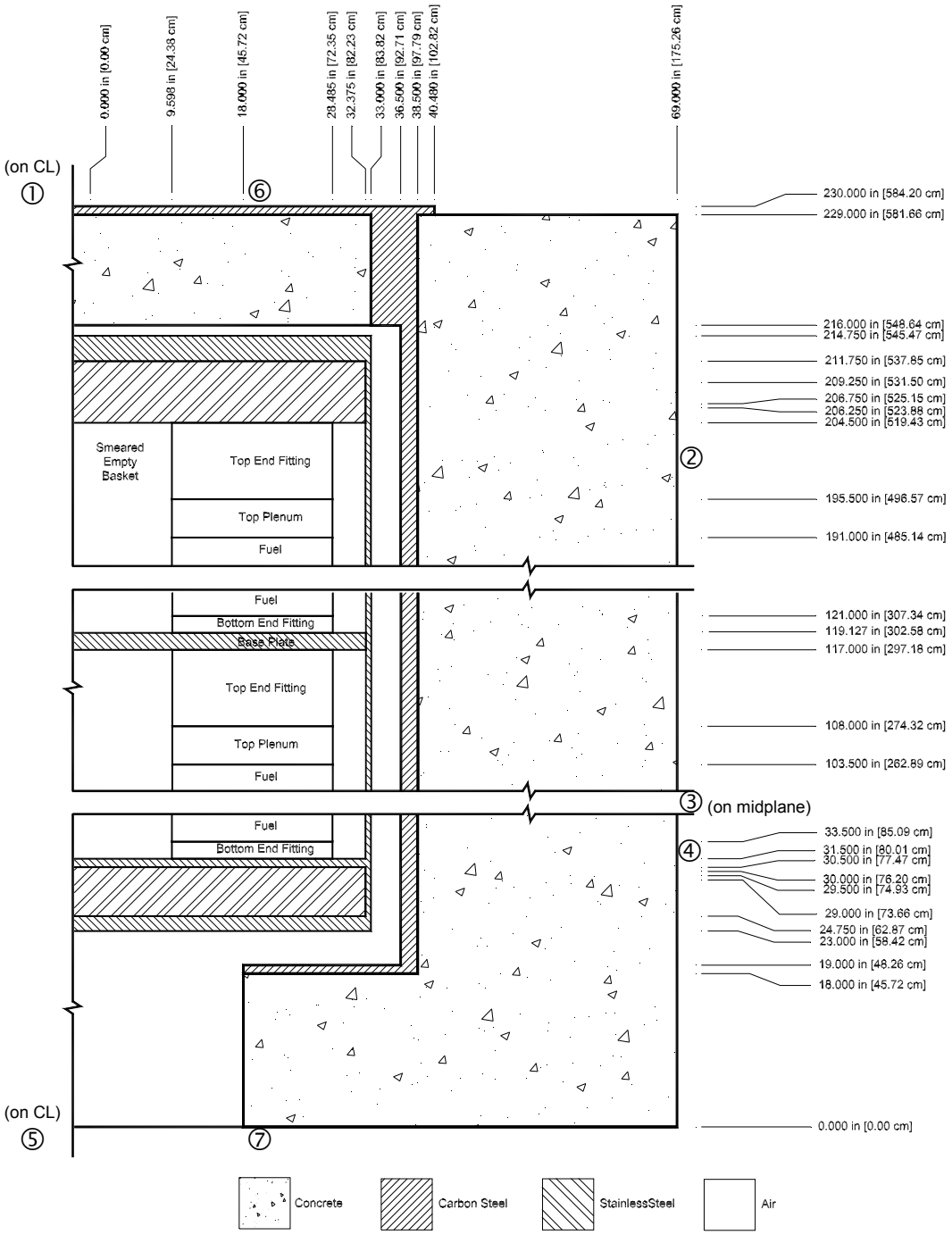

Figure 5.5-2 - DORT R-Z Model Geometry for the W74 Canister in the W150 Storage Cask

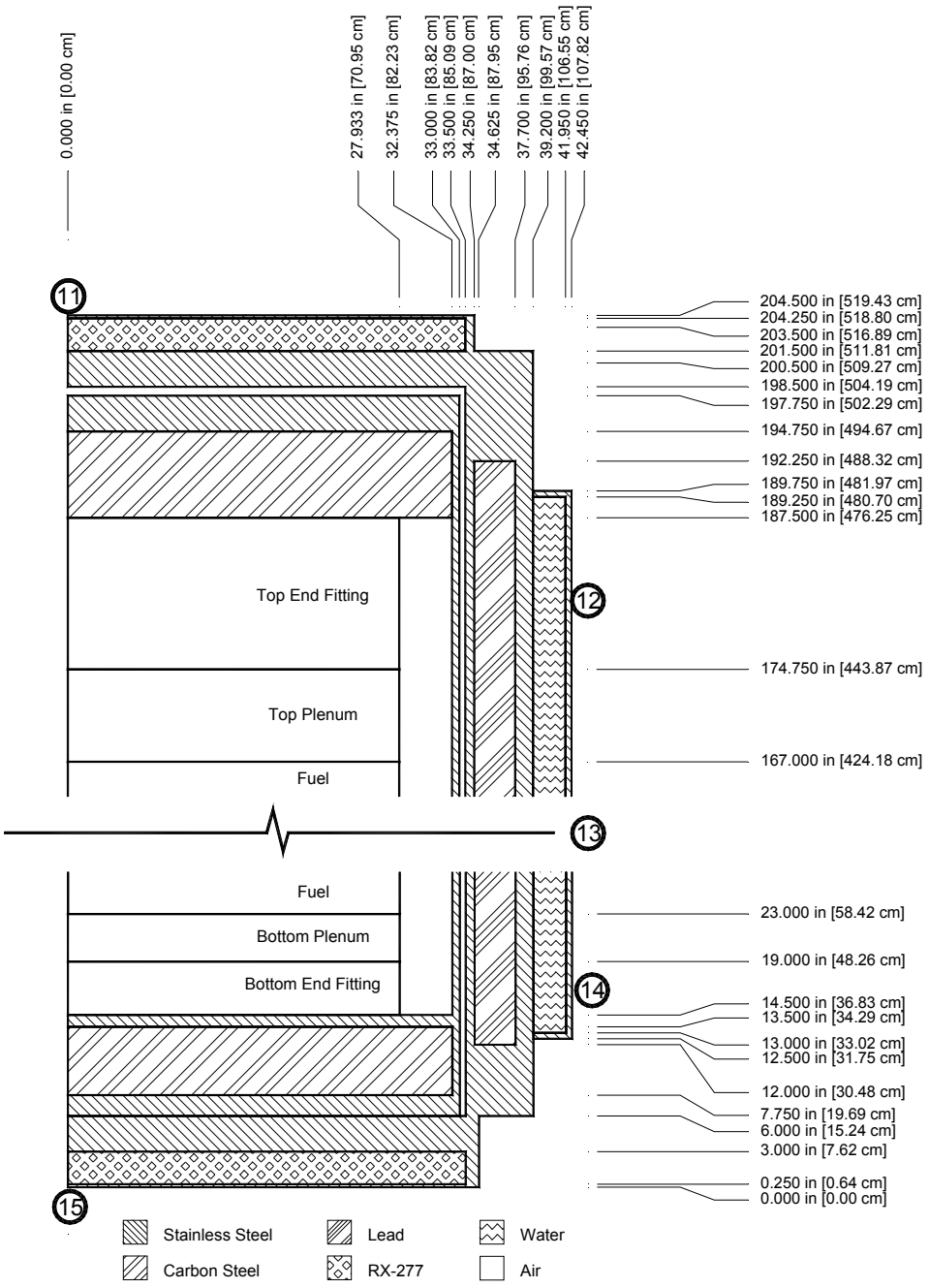

Figure 5.5-3 - DORT R-Z Model Geometry for the W21 Canister in the W100 Transfer Cask

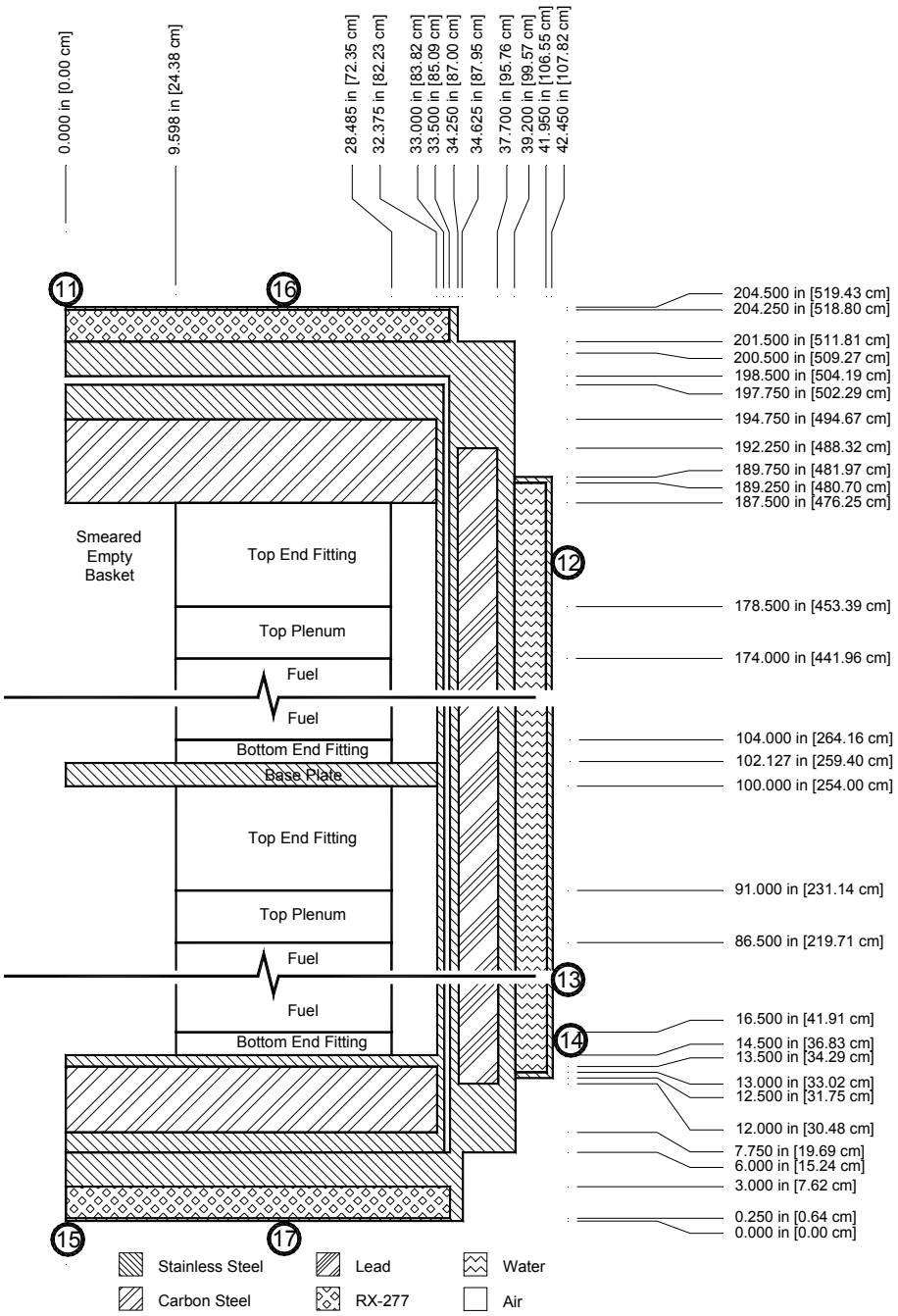

Figure 5.5-4 - DORT R-Z Model Geometry for the W74 Canister in the W100 Transfer Cask

This page intentionally left blank.

6. CRITICALITY EVALUATION

This chapter presents criticality safety evaluation basis for the FuelSolutions™ Storage System and describes how the storage system and canister FSARs are organized with respect to the evaluation. The FuelSolutions™ Storage System satisfies the following criticality safety acceptance criteria consistent with the requirements of 10CFR72.124 and 72.236(c):[1]

- The design is fully effective in maintaining subcriticality during all design conditions.
- At least two unlikely, independent, and concurrent or sequential changes in the conditions essential to nuclear criticality safety are necessary before an accidental criticality is deemed possible.

Since the FuelSolutions™ canisters perform the primary criticality control function, the canister-specific criticality safety evaluations for each canister design are presented in Chapter 6 of the respective FuelSolutions™ Canister Storage FSAR. In addition to presenting the evaluations necessary to demonstrate that the FuelSolutions™ Storage System criticality safety criteria are satisfied, Chapter 6 of each FuelSolutions™ Canister Storage FSAR describes the canister criticality control design features, specifies the limiting fuel characteristics, and documents the analysis method validation.

[1] Title 10, U.S. Code of Federal Regulations, Part 72 (10CFR72), *Licensing Requirements for the Independent Storage of Spent Nuclear Fuel and High-Level Radioactive Waste*, 1995.

This page intentionally left blank.

6.1 Discussion and Results

The FuelSolutions™ SFMS is a canister-based dry storageand transportation system for SNF. The system is comprised of a family of interfacing components designed to accommodate a large variety of fuel assembly classes as described in Chapter 1 of this FSAR. The primary system component of interest from a criticality control perspective are the canisters into which spent nuclear fuel is loaded. Several FuelSolutions™ canister designs are utilized to accommodate the full range of fuel assembly classes being discharged from commercial nuclear power reactors.

A FuelSolutions™ canister closure provides the primary means of criticality control under all modes of operations (i.e., wet loading, closure, on-site transfer, dry storage, and off-site transportation). All FuelSolutions™ canister basket assemblies incorporate favorable geometry and permanent fixed neutron absorber material design features to assure criticality control. FuelSolutions™ canister basket assemblies which incorporate flux trap criticality control design features include provisions to preclude preferential or uneven flooding within the canister cavity. Each FuelSolutions™ canister design is described further in Section 1.2.1 of the respective FuelSolutions™ Canister Storage FSARs. The criticality safety evaluation presented in Chapter 6 of each FuelSolutions™ Canister FSAR demonstrate compliance with the criticality control design criteria and establish fuel assembly design specific maximum fuel enrichments acceptable for loading into each respective canister design.

As specified in 10CFR71,[2] the criticality safety evaluation in each FuelSolutions™ Canister Storage FSAR is conservatively based on analyses that correspond to a hypothetical loaded canister under normal and accident conditions of transportation. The normal condition criticality analyses are applicable for off-normal conditions of storage.

The canisters are modeled inside a representative transportation cask geometry. The analyses assume canister component deformations that correspond to canister *g*-loads expected during transportation cask drop events. In accordance with 10CFR71 analysis requirements, an infinite array of these casks is modeled with optimum interspersed moderation. This modeled configuration is bounding for all conditions of storage for the FuelSolutions™ system.

There are no conditions specified by 10CFR72 that could occur during canister storage operations (including fuel loading, closure, on-site transfer, dry storage, or unloading) which could result in k_{eff} exceeding that calculated using the modeled transportation condition described above.

The FuelSolutions™ canister criticality models are not based on any specific transportation cask configuration and the *g*-loads used to establish basket deformations are not based on any specific calculated values. However, analysis shows that the canister overpack geometry and basket *g*-loads assumed for the FuelSolutions™ criticality calculations are bounding for all conditions of storage. Therefore, the FuelSolutions™ criticality analyses are sufficient to qualify the FuelSolutions™ casks and canisters for storage.

[2] Title 10, U.S. Code of Federal Regulations, Part 71 (10CFR71), *Packaging and Transportation of Radioactive Materials*, 1996.

This page intentionally left blank.

6.2 Spent Fuel Loading

The criticality safety evaluation presented in Chapter 6 of each FuelSolutions™ Canister Storage FSAR includes analysis of the specific fuel assembly classes and types accommodated by the respective canister design. Each fuel assembly class to be accommodated is identified and analysis is performed to establish the maximum acceptable assembly specific fuel enrichment permitted. In cases where fuel assembly designs may incorporate multiple fuel pin enrichments, all fuel pins are modeled assuming a consistent pin-weighted maximum average enrichment measured at any axial plane over the length of the assembly. In no case are credits for fuel burnup or fuel-related burnable neutron absorbers taken. For canisters designed to store many classes and configurations of fuel assemblies, fuel array parameters for the range of fuel assembly types to be accommodated may be compared and bounding fuel "criticality classes" established for use in discrete criticality calculations. In cases where a criticality class is established, sufficient supporting calculations are performed to demonstrate the selected assembly design is indeed bounding and the specific group of assembly classes and/or types included under the bounding evaluation are provided. The maximum acceptable enrichments for each fuel assembly class and type may be calculated for more than one canister loading specification, as defined in the *technical specification* contained in Section 12.3 of each FuelSolutions™ Canister Storage FSAR.

This page intentionally left blank.

6.3 Model Specification

The analytical models used for the criticality safety evaluations are presented in Chapter 6 of each FuelSolutions™ Canister Storage FSAR. The models include cases for normal and hypothetical accident conditions applicable to a FuelSolutions™ canister loaded inside a representative transportation cask geometry that is bounding for all conditions of storage. The bases for this conclusion are discussed in Section 6.6 of this FSAR.

Two design conditions are considered in the criticality safety evaluation of each FuelSolutions™ canister; normal conditions and the hypothetical accident condition. The normal conditions for a FuelSolutions™ canister includes: complete flooding with water with a density which results in optimum moderation, worst case asymmetric assembly placement within the basket guide tubes, and application of worst case material and fabrication tolerances. The hypothetical accident condition includes all the same worst case normal conditions, worst case post-accident configuration, and the worst case reflection from the cask body components.

The following assumptions are generically applied in all FuelSolutions™ canister criticality safety evaluation analytical models:

- Discrete FuelSolutions™ canister analytical models are utilized which include each specific fuel assembly type qualified for loading into the canister, or a bounding fuel type (i.e., criticality class) may be analyzed where it is demonstrated that the analyzed fuel is the most reactive of the fuel types included in the criticality class. All fuel assemblies contain uranium dioxide at a uniform pin enrichment corresponding to the specified maximum acceptable enrichment limit for the respective fuel array type analyzed. Uniform pin enrichments are established based on the maximum pin weighted average across the array at any axial point along the length of the assembly. The maximum pin-weighted uniform enrichments are applied over the entire length of each fuel stack. The range of fuel damage conditions accounted for is clearly stated in the criticality evaluation provided in Chapter 6.
- The fuel pellets are conservatively modeled assuming a bounding density based on no dishing fraction.
- Unirradiated fuel conditions are assumed (fresh fuel isotopic concentrations). No credit is taken for any ^{234}U or ^{236}U in the fuel, nor is any credit taken for the buildup of fission product poison material.
- No credit is taken for any spacer grids, spacer sleeves, or top and bottom end fittings. The top and bottom end fittings are assumed to be manufactured from material which would remove neutrons by radiative capture.
- No credit is taken for any burnable absorber in the fuel rods.
- Worst case fully flooded conditions are assumed, including water present in the fuel rod-cladding gap. The fully flooded conditions are the most conservative since the FuelSolutions™ canister design is an under-moderated system. The moderator is assumed to be pure water at a temperature and density demonstrated to yield the most reactive condition.
- No credit is taken for spent fuel pool soluble boron.

- Worst case minimum boron concentrations for fixed neutron-absorbing materials are assumed. Minimum concentrations of neutron-absorbing constituents are established based on the manufacturers minimum specified values verified by process controls during material manufacture. Credit is taken for only 75% of the specified minimum boron concentration for fixed neutron-absorbing materials.
- Worst case material and fabrication tolerance dimensions are applied to the nominal component dimensions. The tolerances applied and accounted for in the worst-case model are summarized.
- The radial boundary is defined as the body of the representative transportation cask under normal conditions. The single package model is surrounded by 12 inches of water for reflection. The package array model consists of an infinite number of transportation casks in a close packed arrangement (triangular pitch array) with the adjacent casks in contact with one another. Radial models for all hypothetical accident evaluations incorporate the loss of the transportation cask body neutron shield.

Both normal conditions and hypothetical accident conditions are considered. The normal condition models of FuelSolutions™ canisters include consideration of: a) complete flooding with water with a density which results in optimum moderation, b) worst case asymmetric fuel assembly placement within the basket guide tubes, and c) application of worst case material and fabrication tolerances. The hypothetical accident condition models for the FuelSolutions™ canisters include all the normal conditions as well as incorporating accident induced basket permanent deformations and loss of the transportation cask neutron shield.

6.4 Criticality Evaluation

The criticality safety evaluations for the FuelSolutions™ SFMS are presented in Chapter 6 of the respective FuelSolutions™ Canister Storage FSAR. Reference these canister FSARs for component drawings and descriptions of the respective criticality safety evaluation models. The comparison of the various cask configuration reflector characteristics is presented in Section 6.6 of this FSAR.

This page intentionally left blank.

6.5 Criticality Benchmark Experiments

The calculation methods used in FuelSolutions™ canister criticality safety evaluations are verified by comparison with critical experiment data which is sufficiently diverse to establish that the method bias and uncertainty is applicable to the range of specific canister conditions considered in the criticality analysis. A set of critical experiments which are judged to be sufficiently representative of each specific canister design and proposed candidate spent fuel characteristics are analyzed using MCNP[3] to demonstrate its applicability to the canister criticality analysis and to establish a set of Upper Subcritical Limits (USLs)[4] that define acceptance criteria in accordance with NUREG/CR-5661.[5] Benchmark experiments are selected with compositions, configurations, and nuclear characteristics that are comparable to those encountered in each FuelSolutions™ canister design.

A set of Upper Subcritical Limits is determined using the MCNP results for the critical experiments and USL Method 1, Confidence Band with Administrative Margin as defined in NUREG/CR-5661. The USL Method 1 applies a statistical calculation of the method bias and its uncertainty plus an administrative margin (0.05 Δk) to a linear fit of the critical experiment benchmark data. The USLs are determined as a function of the critical experiment system parameters; enrichment, water-to-fuel ratio, hydrogen-to-^{235}U ratio, and pin pitch.

Since canister designs and fuel specifications vary among FuelSolutions™ canister designs, the actual criticality analysis method benchmark calculations for the FuelSolutions™ SFMS are presented in the respective FuelSolutions™ Canister Storage FSAR. Reference Chapter 6 of each FuelSolutions™ Canister Storage FSAR for a discussion of benchmark experiment results including a detailed description of experiments selected and analyzed in each canister application.

---

[3] Briesmeister, J., *MCNP-4A General Monte Carlo Code N-Particle Transport Code Version 4A*, LA-12625-M, November 1993.

[4] Lichtenwalter, J. J., *Criticality Benchmark Guide for Light-Water-Reactor Fuel in Transportation and Storage Packages,* ORNL///TM-13211 NUREG/CR-6361, March 1997.

[5] Dyer, H. R., and Parks, C. V.*, Recommendations for Preparing the Criticality Safety Evaluation of Transportation Packages*, ORNL, NUREG/CR-5661, April 1997.

This page intentionally left blank.

6.6 Supplemental Data

FuelSolutions™ canisters in the transportation mode specified in 10CFR71.55 represent the bounding conditions for assurance of criticality safety compared with those of storage conditions based on the following:

- The transportation post-accident conditions include worst-case assumptions for basket permanent deformations which increase system reactivity above any credible normal, off-normal, or accident condition for storage. The canister *g*-loads arbitrarily assumed to represent post-accident transportation conditions are higher than those which occur for any conditions of storage with the FuelSolutions™ dry storage system. This yields basket deformations that are bounding for all conditions of storage.
- The transportation requirements include worst-case assumptions for moderator densities and inter-package boundary conditions which increase system reactivity above any credible normal, off-normal, or accident condition for storage. Specifically, an infinite array of transportation casks is modeled, whereas only single casks need be modeled for storage.
- Due to the characteristics of the representative transportation cask geometry, the transportation modeling includes worst-case assumptions for reflection conditions which increase system reactivity above any credible normal, off-normal, or accident condition for storage. FuelSolutions™ canisters are slightly more reactive in the modeled transportation cask geometry than in the FuelSolutions™ W100 Transfer Cask because the modeled transportation cask depleted uranium gamma shield provides better neutron reflection than the transfer cask lead gamma shielding.

Section 6.4.2.1.1.4 of each FuelSolutions™ Canister Storage FSAR provides a summary of the analyses performed to support the use of the modeled transportation cask geometry as the bounding condition for criticality.

This page intentionally left blank.

7. CONFINEMENT

Confinement of radioactive materials in a FuelSolutions™ W150 Storage Cask and a W100 Transfer Cask is provided by a FuelSolutions™ canister. The design of the FuelSolutions™ canister confinement boundary assures that there is no credible design basis events that would result in a radiological release to the environment. The W150 Storage Cask and W100 Transfer Cask are designed to provide physical protection for a FuelSolutions™ canister during normal, off-normal, and accident conditions, to assure that the canister confinement boundary is maintained. The inert atmosphere in a FuelSolutions™ canister and the passive heat removal capabilities of the storage cask also assure that the SNF assemblies remain protected from degradation, which might lead to gross cladding ruptures during dry storage.

The physical protection of the canister provided by the storage cask and the transfer cask is demonstrated by the structural analyses documented in Chapters 3 and 11 of this FSAR. The heat removal capabilities of the storage cask and the transfer cask are demonstrated by the thermal analyses documented in Chapter 4 of this FSAR. The qualification of the FuelSolutions™ Storage System confinement boundary for all design basis conditions is documented in each FuelSolutions™ Canister Storage FSAR.

This page intentionally left blank.

7.1 Confinement Boundary

The confinement boundary for the FuelSolutions™ Storage System is provided by the FuelSolutions™ canister shell assembly. The canister confinement boundary includes the canister's cylindrical shell, the bottom closure plate, and the two top end closure plates. The confinement boundary design is described further in Section 7.1 of each FuelSolutions™ Canister Storage FSAR.

This page intentionally left blank.

7.2 Requirements for Normal and Off-Normal Conditions of Storage

Discussion of the radionuclides available for release, release fractions, atmospheric dispersion, dose conversion factors, and the general methodology for calculating doses due to the release assumed for the canister design leakage rate is provided in Section 7.4 of this FSAR. Section 7.2 of each FuelSolutions™ Canister Storage FSAR provides specific evaluation of the confinement boundary release for normal and off-normal conditions.

The integrity of the FuelSolutions™ Storage System confinement boundary is discussed in each FuelSolutions™ Canister Storage FSAR.

In accordance with the requirements of 10CFR72.122(h)(4),[1] the confinement system is required to have the capability for continuous monitoring. The NRC Office of General Counsel has provided an interpretation, and NRC staff has concurred (as noted in paragraph 7.IV.4.a of NUREG-1536[2]) that both routine surveillance programs and active instrumentation meet the intent of continuous monitoring. Further, NUREG-1536, paragraph 7.V.2 states that "the NRC has found that casks closed entirely by welding do not require seal monitoring." As described in each FuelSolutions™ Canister Storage FSAR, the canisters are sealed using redundant closure welds. Thus, the routine surveillance requirements imposed on the FuelSolutions™ Storage System, as defined in the technical specifications contained in Section 12.3 of this FSAR, satisfy the requirements of 10CFR72.122(h)(4).

[1] Title 10, U.S. Code of Federal Regulations, Part 72 (10CFR72), *Licensing Requirements for the Independent Storage of Spent Nuclear Fuel and High-Level Radioactive Waste*, 1995.

[2] NUREG-1536, *Standard Review Plan for Dry Cask Storage Systems*, U.S. Nuclear Regulatory Commission, January 1997.

This page intentionally left blank.

7.3 Confinement Requirements for Hypothetical Accident Conditions

Discussion of the radionuclides available for release, release fractions, atmospheric dispersion, dose conversion factors, and the general methodology for calculating doses due to the release assumed for the canister design leakage rate is provided in Section 7.4 of this FSAR. Section 7.3 of each FuelSolutions™ Canister Storage FSAR provides specific evaluation of the confinement boundary release for postulated accident conditions.

The integrity of the FuelSolutions™ Storage System confinement boundary is discussed in each FuelSolutions™ Canister Storage FSAR.

This page intentionally left blank.

7.4 Supplemental Data

7.4.1 Atmospheric Release Calculation Supporting Data

7.4.1.1 Nuclides with Potential for Release

In accordance with the guidance of ISG-5,[3] the radionuclides to be included in the evaluation are all fission products which constitute greater than 0.1% of the total curie inventory in the fuel assembly, all actinides products which constitute greater than 0.01% of the total curie inventory in the fuel assembly, plus iodine. The radionuclides considered include gases, volatiles, and fuel fines which result from cladding breaches, and crud which spalls from the fuel rods.

Since the fission products available from SNF include the same principal radionuclides and vary only in quantity depending on the irradiation history and post-irradiation cooling time, the fission products considered are addressed generically here.

7.4.1.1.1 Fuel Fission Gases, Volatiles, and Fines

The quantity of fission products in the SNF assemblies for the respective canister designs is obtained for each fuel assembly type, cooling time, burnup, and enrichment combination from the ORIGEN2 data libraries discussed in Section 5.2.2 of this FSAR.

The isotopes that contribute to the dose, based on the guidance provided in ISG-5,[3] are listed in Table 7.4-1. Of these isotopes, Kr-85, Rh-106, and Ba-137m only contribute to the submersion doses, and H-3 and Ru-106 contribute only to the inhalation doses. Generally, the total dose to each biological region, excluding the skin, is dominated by the inhalation dose, while the total skin dose is dominated by the submersion dose.

7.4.1.1.2 CRUD Radionuclides

The major radionuclide particulate present in the CRUD layer and available for aerosol entrainment and release is Co-60. This radionuclide is also listed in Table 7.4-1.

The inventory of Co-60 in the CRUD layer is conservatively estimated using the data from NUREG/CR-6487,[4] which provides the Co-60 activity at the time of fuel discharge. For PWR fuel assemblies, a conservative Co-60 curie loading of 140 $\mu ci/cm^2$ is used. For BWR fuel assemblies a conservative Co-60 curie loading of 1254 $\mu ci/cm^2$ is used. These curie loadings are adjusted to account for the post-irradiation cooling time at which the dose calculation is performed, as documented in Section 7.3 of each FuelSolutions™ Canister Storage FSAR.

The CRUD source is a function of the activity of the CRUD and the area of the fuel assembly surfaces upon which CRUD is expected to form. Since the fuel assembly surface area varies by

---

[3] ISG-5, *Normal, Off-Normal, and Hypothetical Accident Dose Estimate Calculations for the Whole Body, Thyroid, and Skin,* Revision 1, Spent Fuel Project Office Interim Staff Guidance, United States Nuclear Regulatory Commission, May 1999.

[4] NUREG/CR-6487, *Containment Analysis for Type B Packages Used to Transport Various Contents*, Lawrence Livermore National Laboratory, November 1996.

fuel design, the areas are determined in Section 7.4.1 of each FuelSolutions™ Canister Storage FSAR.

7.4.1.2 Fraction Available for Release

During normal, off-normal, and hypothetical accident conditions, most of the gaseous, volatile, and particulate radionuclides are retained in the fuel pellets. The quantity available for release from a breached fuel rod is provided for normal and accident conditions in NUREG/CR-6487. The release fraction for off-normal conditions is taken to be the same as that for normal conditions.

As discussed in NUREG/CR-6487, most of the CRUD is assumed to remain fixed to the fuel cladding surfaces under normal and off-normal conditions. Under postulated accident conditions, it is conservatively assumed that the crud no longer adheres to the rods.

Table 7.4-1 lists the fractions of the total radionuclide inventory available for release from the fuel rods into the canister internal free volume and the associated basis.

A cask-to-environment release fraction is applied for fuel fines. This factor is taken to be 10%, as in Sandia report SAND90-2406.[5]

7.4.1.3 Fraction of Fuel Rods Breached

The percentage of fuel rods assumed to be failed for the release calculation varies for normal, off-normal, and accident conditions. Consistent with NUREG-1536, 1% of the rods are assumed to fail for normal conditions, 10% for off-normal conditions, and 100% for accident conditions.

7.4.1.4 Atmospheric Dispersion

Regulatory Guide 1.145[6] is used to determine the atmospheric dispersion factors (χ/Q) for various downwind distances. For normal and off-normal conditions, the atmospheric dispersion factors are based on neutral atmospheric conditions (Pasquill D) with an assumed wind speed of 5 m/s. The factors for the accident condition are based on moderately stable atmospheric conditions (Pasquill F) for a wind speed of 1 m/s. These factors are presented for distances from 100 m to 1000 m in Table 7.4-2.

7.4.1.5 Dose Conversion Factors

Doses for each radionuclide considered are based on the effective dose equivalent method. Exposure to dose conversion factors for all radionuclides are obtained from Federal Guidance Report No. 11.[7] Doses are calculated for the effects of inhalation and submersion for all critical organs: whole body, thyroid, gonad, breast, lung, red marrow, bone surface, skin, and lens of the

---

[5] *A Method for Determining the Spent-Fuel Contribution to Transport Cask Containment Requirements*, Sandia National Laboratory. SAND90-2406, November 1992.

[6] Regulatory Guide 1.145, *Atmospheric Dispersion Models for Potential Accident Consequence Assessments at Nuclear Power Plants*, Revision 1, U.S. Nuclear Regulatory Commission, November 1982.

[7] Federal Guidance Report No. 11, *Limiting Values of Radionuclide Intake and Air Concentration and Dose Conversion Factors for Inhalation, Submersion, and Ingestion*, U.S. Environmental Protection Agency, Report No. DE89-011065, 1988.

eye. The exposure to dose conversion factors and the exposure to dose rate conversion factors for the radionuclides considered in this postulated accident evaluation are summarized in Table 7.4-3 and Table 7.4-4. Although dose calculations are performed for all critical organs, two are found to be typically limiting. The lung dose is generally limiting in cases where the overall doses are dominated by crud release. The bone surface dose is generally limiting in situations where the overall doses are dominated by the release of spent fuel material. Thus Table 7.4-3 and Table 7.4-4 include columns for bone surface and lung, in addition to thyroid and full body.

7.4.1.6 Event Duration and Occupancy Factor

The evaluation is performed for a leakage duration of one year for normal and off-normal conditions, and 30 days for the accident condition, per ISG-5. An occupancy factor of 100% is assumed.

7.4.1.7 Canister Release Fraction

The quantity of leakage from the canister is determined based on the design leakage rate, as defined in the *technical specification* contained in Section 12.3 of this FSAR. This test condition leak rate is then used to determine an equivalent flaw size using the methodology of ANSI N14.5,[8] which is then used to develop the leak rate applicable to the conditions of the event under consideration. The available radioactive material in the canister is then assumed to leak continuously at that rate for the duration of the event.

The fraction of material released over the duration of the event is given by the expression

$$f = Q \bullet t / V$$

where Q is the leakage rate for the event under consideration, V is the canister free volume, and t is the duration of the event.

7.4.1.8 Dose Calculations

Committed effective dose equivalent (CEDE) and thyroid dose values are calculated for each of the radionuclides listed in Table 7.4-1, using the dose conversion factors provided in Federal Guidance Report 11.

The following relationship is used to calculate the doses for inhalation:

$$\text{Inhalation Dose} = \sum_i (I_i)(BR)(\chi / Q)(DCF_i), rem$$

where:

I_i = released activity of radionuclide i for the release duration, μCi

BR = breathing rate, m^3/sec

[8] ANSI N14.5, *American National Standard for Radioactive Materials - Leakage Tests on Packages for Shipment*, American National Standards Institute, February 1998.

χ/Q = atmospheric dispersion factor, sec/m^3

DCF_i = Dose conversion factor for radionuclide *i*, rem/μCi

The inhalation doses are based on a worker's breathing rate of 3.3 x 10^{-4} m^3/sec, as specified in Federal Guidance Report No. 11.

Similarly, the formula used to calculate doses for submersion is:

$$\text{Submersion Dose} = \sum_i (I_i)(\chi / Q)(DRCF_i), rem$$

where:

$DRCF_i$ = Dose rate conversion factor for radionuclide *i*, rem-m^3/μCi-sec

Dose rates associated with the normal and off-normal conditions are reported in Section 7.2 and postulated accident conditions are reported in Section 7.3.3 of each FuelSolutions™ Canister Storage FSAR. Total effective dose equivalent (TEDE), thyroid doses, and other organ doses from 100 to 1000 meters are presented. In addition, doses are presented for a limiting organ, that is, the organ that results in the highest organ dose.

Table 7.4-1 - Radionuclides Considered in Atmospheric Release Calculations and Associated Release Fractions (2 pages)

Radionuclide	Rod Release Fraction	
	Normal and Off-Normal	Accident
Volatiles		
^{90}Sr	2.0×10^{-4}	2.0×10^{-4}
^{106}Ru		
^{134}Cs		
^{137}Cs		
Gases		
^{3}H	0.30	0.30
^{85}Kr		
^{129}I		
Crud		
^{60}Co	0.15	1.00
Fines		
^{90}Y	3.0×10^{-5}	3.0×10^{-5}
^{106}Rh		
^{125m}Te		
^{125}Sb		
^{137m}Ba		
^{144}Pr		
^{144}Ce		
^{147}Pm		
^{154}Eu		
^{155}Eu		

Table 7.4-1 - Radionuclides Considered in Atmospheric Release Calculations and Associated Release Fractions (2 pages)

Radionuclide	Rod Release Fraction	
	Normal and Off-Normal	Accident
Fines (continued)		
^{238}Pu	$3.0x10^{-5}$	$3.0x10^{-5}$
^{239}Pu		
^{240}Pu		
^{241}Pu		
^{241}Am		
^{242}Cm		
^{244}Cm		

Table 7.4-2 - Atmospheric Dispersion Factors

Distance, m	χ/Q, sec/m^3	
	Normal & Off-Normal (Pasquill D)	Accident (Pasquill F)
100	1.244E-3	8.65E-3
110	9.417E-4	6.631E-3
120	7.676E-4	5.565E-3
130	6.582E-4	4.421E-3
150	5.232E-4	3.248E-3
200	3.478E-4	2.487E-3
300	1.638E-4	1.163E-3
400	9.873E-5	6.593E-4
500	6.444E-5	4.852E-4
600	5.182E-5	3.681E-4
700	4.175E-5	2.584E-4
800	3.023E-5	2.411E-4
900	2.511E-5	1.95E-4
1000	2.194E-5	1.611E-4

Table 7.4-3 - Exposure-to-Dose Conversion Factors (5 pages)

Radionuclide	Lung	Bone Surface	Thyroid	CEDE
Inhalation DCF (Sv/Bq)				
SN119M	1.15E-08	4.32E-09	2.13E-10	1.69E-09
SB125	2.17E-08	2.73E-09	3.24E-10	3.30E-09
PU241	3.18E-06	4.20E-05	1.24E-11	2.23E-06
CM244	1.93E-05	1.17E-03	1.01E-09	6.70E-05
PU238	3.20E-04	1.90E-03	9.62E-10	1.06E-04
AM241	1.84E-05	2.17E-03	1.60E-09	1.20E-04
CM242	1.55E-05	4.87E-05	9.41E-10	4.67E-06
PU240	3.23E-04	2.11E-03	9.05E-10	1.16E-04
PU239	3.23E-04	2.11E-03	9.03E-10	1.16E-04
CS137	8.82E-09	7.94E-09	7.93E-09	8.63E-09
BA137M	0.00E+00	0.00E+00	0.00E+00	0.00E+00
CS134	1.18E-08	1.10E-08	1.11E-08	1.25E-08
RU106	1.04E-06	1.37E-08	1.37E-08	1.29E-07
RH106	0.00E+00	0.00E+00	0.00E+00	0.00E+00
SR 90	2.86E-06	7.27E-07	2.64E-09	3.51E-07
Y 90	9.31E-09	2.78E-10	9.52E-12	2.28E-09
PM147	7.74E-08	1.02E-07	1.98E-14	1.06E-08
CE144	7.91E-07	4.54E-08	1.88E-09	1.01E-07
PR144	9.40E-11	1.35E-13	8.47E-15	1.17E-11
EU154	7.92E-08	5.23E-07	7.14E-09	7.73E-08
KR 85	0.00E+00	0.00E+00	0.00E+00	0.00E+00
EU155	1.19E-08	1.52E-07	2.40E-10	1.12E-08
TE125M	1.04E-08	3.21E-08	9.93E-11	1.97E-09
I129	3.14E-10	1.38E-10	1.56E-06	4.69E-08
H 3	1.73E-11	1.73E-11	1.73E-11	1.73E-11
U237	4.70E-09	4.02E-09	2.62E-11	9.54E-10
U239	6.16E-11	1.27E-11	4.32E-13	1.01E-11
NP238	3.47E-09	2.10E-07	2.45E-11	1.00E-08
NP239	2.36E-09	2.03E-09	7.62E-12	6.78E-10
NP240M	0.00E+00	0.00E+00	0.00E+00	0.00E+00
NP240	1.26E-10	6.99E-11	1.98E-12	2.20E-11

Table 7.4-3 - Exposure-to-Dose Conversion Factors (5 pages)

Radionuclide	Lung	Bone Surface	Thyroid	CEDE
Inhalation DCF (Sv/Bq)				
PU243	2.27E-10	1.86E-10	4.82E-13	4.44E-11
AM242	5.20E-08	1.65E-07	2.52E-12	1.58E-08
AM244M	1.08E-10	3.20E-09	1.13E-13	1.90E-10
AM244	2.01E-09	7.47E-08	9.67E-12	4.47E-09
CM249	7.51E-11	7.78E-10	2.05E-13	5.22E-11
BK250	8.18E-10	4.11E-08	4.17E-12	2.04E-09
BK249	1.19E-08	8.07E-06	4.18E-11	3.75E-07
CF252	2.99E-04	6.86E-04	3.38E-08	4.24E-05
CM246	1.30E-06	9.74E-07	5.97E-10	1.62E-07
AM243	1.78E-05	2.17E-03	8.29E-09	1.19E-04
KR 87	0.00E+00	0.00E+00	0.00E+00	0.00E+00
KR 88	0.00E+00	0.00E+00	0.00E+00	0.00E+00
RB 88	1.47E-10	1.47E-12	1.37E-12	2.26E-11
RB 89	6.80E-11	2.54E-12	1.61E-12	1.16E-11
SR 89	8.35E-08	8.37E-09	4.16E-10	1.12E-08
SR 91	2.13E-09	1.14E-10	4.08E-11	4.49E-10
Y 91	9.87E-08	5.54E-09	1.10E-10	1.32E-08
Y 91M	7.00E-11	3.79E-12	6.23E-13	9.82E-12
SR 92	1.05E-09	2.56E-11	2.19E-11	2.18E-10
Y 92	1.24E-09	1.23E-11	3.69E-12	2.11E-10
Y 93	2.52E-09	4.04E-11	5.06E-12	5.82E-10
Y 94	1.48E-10	6.58E-13	6.68E-13	1.89E-11
Y 95	8.04E-11	2.76E-12	3.46E-13	1.02E-11
ZR 95	4.07E-08	1.03E-07	1.44E-09	6.39E-09
NB 95	8.32E-09	2.42E-09	3.58E-10	1.57E-09
ZR 97	4.10E-09	5.09E-10	9.56E-11	1.17E-09
NB 97	1.56E-10	1.79E-12	1.34E-12	2.24E-11
NB 97M	0.00E+00	0.00E+00	0.00E+00	0.00E+00
NB 98	2.30E-10	3.23E-12	2.97E-12	3.31E-11
MO 99	4.29E-09	5.40E-10	1.17E-10	1.07E-09
TC 99M	3.07E-11	2.62E-12	5.01E-11	8.80E-12
MO101	7.52E-11	1.11E-12	1.04E-12	1.12E-11

Table 7.4-3 - Exposure-to-Dose Conversion Factors (5 pages)

Radionuclide	Lung	Bone Surface	Thyroid	CEDE
Inhalation DCF (Sv/Bq)				
TC101	3.01E-11	2.80E-13	7.72E-12	4.84E-12
RU103	1.56E-08	6.18E-10	5.97E-10	2.42E-09
RH103M	9.53E-12	8.73E-14	8.49E-14	1.38E-12
TC104	1.30E-10	1.58E-12	4.50E-11	2.22E-11
RU105	5.73E-10	1.57E-11	1.50E-11	1.23E-10
RH105	9.58E-10	2.71E-11	2.57E-11	2.58E-10
RH107	4.49E-11	4.63E-13	4.25E-13	6.53E-12
PD109	1.20E-09	4.64E-11	8.09E-12	2.96E-10
AG109M	0.00E+00	0.00E+00	0.00E+00	0.00E+00
AG110	0.00E+00	0.00E+00	0.00E+00	0.00E+00
SB129	8.98E-10	4.21E-11	2.07E-11	1.74E-10
TE129	1.53E-10	2.03E-12	1.63E-12	2.42E-11
I130	6.03E-10	4.03E-11	1.99E-08	7.14E-10
SB131	1.26E-10	3.23E-12	5.84E-10	3.88E-11
TE131	2.99E-10	6.21E-12	2.66E-09	1.29E-10
I131	6.57E-10	5.73E-11	2.92E-07	8.89E-09
TE132	1.67E-09	1.53E-09	6.28E-08	2.55E-09
I132	2.71E-10	1.24E-11	1.74E-09	1.03E-10
TE133	4.64E-11	7.49E-13	5.91E-10	2.49E-11
TE133M	2.06E-10	6.94E-12	2.63E-09	1.17E-10
I133	8.20E-10	2.52E-11	4.86E-08	1.58E-09
XE133	0.00E+00	0.00E+00	0.00E+00	0.00E+00
TE134	6.60E-11	8.58E-12	5.56E-10	3.44E-11
I134	1.43E-10	5.31E-12	2.88E-10	3.55E-11
I135	4.41E-10	2.01E-11	8.46E-09	3.32E-10
XE135M	0.00E+00	0.00E+00	0.00E+00	0.00E+00
CS135M	2.28E-11	2.66E-12	3.00E-12	6.68E-12
CS136	2.32E-09	1.70E-09	1.73E-09	1.98E-09
XE138	0.00E+00	0.00E+00	0.00E+00	0.00E+00
CS138	1.59E-10	3.55E-12	3.57E-12	2.74E-11
BA139	2.53E-10	2.49E-12	2.40E-12	4.64E-11
BA140	1.66E-09	2.41E-09	2.56E-10	1.01E-09

Table 7.4-3 - Exposure-to-Dose Conversion Factors (5 pages)

Radionuclide	Lung	Bone Surface	Thyroid	CEDE
Inhalation DCF (Sv/Bq)				
LA140	4.21E-09	4.03E-10	1.22E-10	1.31E-09
BA141	1.16E-10	4.73E-12	1.33E-12	2.18E-11
LA141	8.88E-10	1.20E-10	9.40E-12	1.57E-10
CE141	1.67E-08	3.79E-09	4.61E-11	2.42E-09
BA142	5.48E-11	1.42E-12	1.27E-12	1.11E-11
LA142	3.50E-10	1.11E-11	8.74E-12	6.84E-11
PR142	2.97E-09	3.48E-11	6.71E-13	7.79E-10
LA143	1.06E-10	3.32E-12	7.81E-13	1.62E-11
CE143	3.88E-09	7.90E-11	1.21E-11	9.16E-10
PR143	1.33E-08	2.74E-10	1.68E-18	2.19E-09
PR145	9.24E-10	6.02E-12	7.96E-14	1.82E-10
PR147	6.15E-11	1.43E-12	2.17E-13	8.22E-12
ND147	1.06E-08	2.33E-09	1.94E-11	1.85E-09
ND149	3.32E-10	5.75E-12	6.24E-13	6.05E-11
PM149	3.12E-09	8.04E-11	3.69E-13	7.93E-10
ND151	5.09E-11	9.66E-13	2.48E-13	8.43E-12
PM151	1.64E-09	9.73E-11	6.69E-12	4.73E-10
SM153	2.05E-09	1.57E-10	1.51E-12	5.31E-10
EU156	1.84E-08	2.76E-09	2.16E-10	3.82E-09
EU157	1.19E-09	3.90E-11	3.04E-12	3.01E-10
GD159	1.05E-09	2.01E-10	6.70E-13	2.64E-10
TB161	4.19E-09	2.07E-09	1.93E-12	9.20E-10
DY165	2.42E-10	2.47E-12	5.45E-14	3.62E-11
HO166	3.25E-09	9.35E-11	4.66E-13	8.48E-10
AG110M	1.20E-07	5.19E-09	6.39E-09	2.17E-08
TE127	4.27E-10	1.44E-11	6.46E-12	8.60E-11
TE127M	3.34E-08	5.24E-08	2.39E-10	5.81E-09
PR144M	0.00E+00	0.00E+00	0.00E+00	0.00E+00
TB160	3.02E-08	2.47E-08	6.54E-10	6.75E-09
TM170	3.90E-08	1.39E-08	1.42E-10	7.11E-09
CD113M	4.09E-07	3.32E-08	3.32E-08	4.13E-07
XE135	0.00E+00	0.00E+00	0.00E+00	0.00E+00

Table 7.4-3 - Exposure-to-Dose Conversion Factors (5 pages)

Radionuclide	Lung	Bone Surface	Thyroid	CEDE
Inhalation DCF (Sv/Bq)				
PM148	1.37E-08	4.80E-10	4.27E-11	2.95E-09
RH106M	2.49E-10	1.34E-11	1.28E-11	5.77E-11
AG111	8.70E-09	7.37E-11	7.06E-11	1.66E-09
PR142M	3.78E-11	4.51E-13	8.51E-15	9.98E-12
PM150	5.78E-10	7.61E-12	3.54E-12	9.79E-11
SM155	5.32E-11	1.65E-12	3.70E-14	6.79E-12
ER169	2.72E-09	1.76E-09	2.81E-12	5.64E-10
TM171	3.99E-09	4.63E-08	5.75E-11	2.47E-09
CM243	1.94E-05	1.47E-03	3.83E-09	8.30E-05
SM151	3.26E-09	1.38E-07	1.32E-14	8.10E-09
U234	2.98E-04	1.09E-05	2.50E-08	3.58E-05

Table 7.4-4 - Exposure-to-Dose-Rate Conversion Factors (5 pages)

Radionuclide	Lung	Bone Surface	Thyroid	CEDE
Submersion DRCF (Sv-m^3)/(Bq-sec)				
SN119M	3.58E-17	2.40E-16	1.04E-16	1.01E-16
SB125	1.95E-14	3.53E-14	2.01E-14	2.02E-14
PU241	6.48E-20	2.19E-19	6.98E-20	7.25E-20
CM244	7.08E-19	8.82E-18	4.19E-18	4.91E-18
PU238	1.06E-18	9.30E-18	4.01E-18	4.88E-18
AM241	6.74E-16	2.87E-15	7.83E-16	8.18E-16
CM242	1.13E-18	1.06E-17	4.91E-18	5.69E-18
PU240	1.09E-18	9.26E-18	3.92E-18	4.75E-18
PU239	2.65E-18	9.47E-18	3.88E-18	4.24E-18
CS137	6.68E-18	2.29E-17	7.55E-18	7.74E-18
BA137M	2.80E-14	4.63E-14	2.88E-14	2.88E-14
CS134	7.37E-14	1.20E-13	7.57E-14	7.57E-14
RU106	0.00E+00	0.00E+00	0.00E+00	0.00E+00
RH106	1.01E-14	1.72E-14	1.03E-14	1.04E-14
SR 90	6.44E-18	2.28E-17	7.33E-18	7.53E-18
Y 90	1.77E-16	4.44E-16	1.87E-16	1.90E-16
PM147	5.45E-19	2.18E-18	6.75E-19	6.93E-19
CE144	7.69E-16	2.49E-15	8.33E-16	8.53E-16
PR144	1.90E-15	2.99E-15	1.95E-15	1.95E-15
EU154	5.99E-14	9.43E-14	6.15E-14	6.14E-14
KR 85	1.14E-16	2.20E-16	1.18E-16	1.19E-16
EU155	2.22E-15	8.09E-15	2.41E-15	2.49E-15
TE125M	2.23E-16	1.22E-15	4.64E-16	4.53E-16
I129	2.14E-16	1.10E-15	3.86E-16	3.80E-16
H 3	2.75E-18	0.00E+00	0.00E+00	3.31E-19
U237	5.48E-15	1.69E-14	5.81E-15	5.97E-15
U239	1.96E-15	6.50E-15	2.11E-15	2.17E-15
NP238	2.65E-14	3.99E-14	2.73E-14	2.72E-14
NP239	7.18E-15	2.00E-14	7.52E-15	7.69E-15
NP240M	1.57E-14	2.61E-14	1.62E-14	1.62E-14
NP240	6.12E-14	1.05E-13	6.31E-14	6.31E-14

Table 7.4-4 - Exposure-to-Dose-Rate Conversion Factors (5 pages)

Radionuclide	Lung	Bone Surface	Thyroid	CEDE
Submersion DRCF (Sv-m^3)/(Bq-sec)				
PU243	9.28E-16	3.23E-15	9.91E-16	1.03E-15
AM242	5.51E-16	1.88E-15	5.94E-16	6.15E-16
AM244M	5.16E-17	1.56E-16	5.97E-17	6.13E-17
AM244	3.74E-14	6.17E-14	3.86E-14	3.85E-14
CM249	9.07E-16	1.62E-15	9.33E-16	9.36E-16
BK250	4.28E-14	6.42E-14	4.41E-14	4.38E-14
BK249	5.21E-20	2.45E-19	8.02E-20	8.21E-20
CF252	1.42E-18	1.04E-17	4.64E-18	5.06E-18
CM246	7.00E-19	8.17E-18	3.82E-18	4.46E-18
AM243	1.92E-15	7.47E-15	2.09E-15	2.18E-15
KR 87	4.04E-14	6.02E-14	4.13E-14	4.12E-14
KR 88	1.01E-13	1.39E-13	1.03E-13	1.02E-13
RB 88	3.31E-14	4.62E-14	3.37E-14	3.36E-14
RB 89	1.04E-13	1.48E-13	1.07E-13	1.06E-13
SR 89	7.08E-17	1.94E-16	7.60E-17	7.73E-17
SR 91	3.37E-14	5.20E-14	3.47E-14	3.45E-14
Y 91	2.50E-16	4.56E-16	2.60E-16	2.60E-16
Y 91M	2.48E-14	4.28E-14	2.54E-14	2.55E-14
SR 92	6.67E-14	9.49E-14	6.82E-14	6.79E-14
Y 92	1.27E-14	1.95E-14	1.30E-14	1.30E-14
Y 93	4.68E-15	7.58E-15	4.79E-15	4.80E-15
Y 94	5.50E-14	8.22E-14	5.65E-14	5.62E-14
Y 95	4.72E-14	6.41E-14	4.84E-14	4.79E-14
ZR 95	3.51E-14	5.62E-14	3.61E-14	3.60E-14
NB 95	3.65E-14	5.79E-14	3.75E-14	3.74E-14
ZR 97	8.81E-15	1.38E-14	9.03E-15	9.02E-15
NB 97	3.10E-14	5.11E-14	3.18E-14	3.18E-14
NB 97M	3.46E-14	5.54E-14	3.56E-14	3.55E-14
NB 98	1.18E-13	1.81E-13	1.21E-13	1.21E-13
MO 99	7.06E-15	1.24E-14	7.27E-15	7.28E-15
TC 99M	5.49E-15	1.63E-14	5.75E-15	5.89E-15
MO101	6.72E-14	1.02E-13	6.88E-14	6.87E-14

Table 7.4-4 - Exposure-to-Dose-Rate Conversion Factors (5 pages)

Radionuclide	Lung	Bone Surface	Thyroid	CEDE
Submersion DRCF (Sv-m^3)/(Bq-sec)				
TC101	1.54E-14	3.21E-14	1.59E-14	1.61E-14
RU103	2.18E-14	3.89E-14	2.24E-14	2.25E-14
RH103M	1.87E-18	1.76E-17	8.55E-18	8.80E-18
TC104	9.90E-14	1.51E-13	1.01E-13	1.01E-13
RU105	3.70E-14	6.28E-14	3.80E-14	3.81E-14
RH105	3.57E-15	7.53E-15	3.68E-15	3.72E-15
RH107	1.44E-14	2.99E-14	1.49E-14	1.50E-14
PD109	1.94E-16	7.02E-16	2.46E-16	2.51E-16
AG109M	1.40E-16	5.72E-16	1.88E-16	1.92E-16
AG110	1.73E-15	3.05E-15	1.78E-15	1.78E-15
SB129	6.98E-14	1.07E-13	7.16E-14	7.14E-14
TE129	2.64E-15	4.88E-15	2.74E-15	2.75E-15
I130	1.01E-13	1.68E-13	1.04E-13	1.04E-13
SB131	9.18E-14	1.36E-13	9.40E-14	9.37E-14
TE131	1.96E-14	3.80E-14	2.03E-14	2.04E-14
I131	1.76E-14	3.45E-14	1.81E-14	1.82E-14
TE132	9.65E-15	2.42E-14	1.02E-14	1.03E-14
I132	1.09E-13	1.73E-13	1.12E-13	1.12E-13
TE133	4.47E-14	7.50E-14	4.59E-14	4.60E-14
TE133M	1.12E-13	1.75E-13	1.15E-13	1.14E-13
I133	2.86E-14	4.87E-14	2.93E-14	2.94E-14
XE133	1.32E-15	5.13E-15	1.51E-15	1.56E-15
TE134	4.10E-14	7.56E-14	4.23E-14	4.24E-14
I134	1.27E-13	1.96E-13	1.30E-13	1.30E-13
I135	7.84E-14	1.13E-13	8.01E-14	7.98E-14
XE135M	1.98E-14	3.50E-14	2.04E-14	2.04E-14
CS135M	7.57E-14	1.19E-13	7.79E-14	7.76E-14
CS136	1.04E-13	1.66E-13	1.07E-13	1.06E-13
XE138	5.66E-14	8.46E-14	5.77E-14	5.77E-14
CS138	1.19E-13	1.70E-13	1.21E-13	1.21E-13
BA139	2.03E-15	5.29E-15	2.13E-15	2.17E-15
BA140	8.27E-15	1.55E-14	8.53E-15	8.58E-15

Table 7.4-4 - Exposure-to-Dose-Rate Conversion Factors (5 pages)

Radionuclide	Lung	Bone Surface	Thyroid	CEDE
Submersion DRCF (Sv-m^3)/(Bq-sec)				
LA140	1.15E-13	1.69E-13	1.18E-13	1.17E-13
BA141	4.03E-14	7.17E-14	4.15E-14	4.16E-14
LA141	2.34E-15	3.49E-15	2.39E-15	2.39E-15
CE141	3.17E-15	9.41E-15	3.35E-15	3.43E-15
BA142	5.02E-14	8.09E-14	5.17E-14	5.15E-14
LA142	1.42E-13	1.95E-13	1.45E-13	1.44E-13
PR142	3.10E-15	4.43E-15	3.16E-15	3.15E-15
LA143	5.07E-15	7.59E-15	5.19E-15	5.18E-15
CE143	1.23E-14	2.52E-14	1.28E-14	1.29E-14
PR143	1.86E-17	5.93E-17	2.05E-17	2.10E-17
PR145	7.11E-16	1.23E-15	7.37E-16	7.36E-16
PR147	4.02E-14	7.01E-14	4.14E-14	4.15E-14
ND147	5.82E-15	1.32E-14	6.12E-15	6.19E-15
ND149	1.72E-14	3.74E-14	1.79E-14	1.81E-14
PM149	5.17E-16	1.10E-15	5.36E-16	5.41E-16
ND151	4.35E-14	7.57E-14	4.48E-14	4.48E-14
PM151	1.44E-14	2.99E-14	1.50E-14	1.51E-14
SM153	1.97E-15	7.29E-15	2.22E-15	2.28E-15
EU156	6.63E-14	9.58E-14	6.78E-14	6.75E-14
EU157	1.11E-14	2.37E-14	1.16E-14	1.17E-14
GD159	2.07E-15	4.74E-15	2.19E-15	2.21E-15
TB161	8.20E-16	3.46E-15	9.90E-16	1.02E-15
DY165	1.13E-15	2.58E-15	1.19E-15	1.20E-15
HO166	1.34E-15	2.84E-15	1.41E-15	1.42E-15
AG110M	1.33E-13	2.05E-13	1.36E-13	1.36E-13
TE127	2.32E-16	4.65E-16	2.40E-16	2.42E-16
TE127M	7.62E-17	3.94E-16	1.50E-16	1.47E-16
PR144M	2.00E-16	8.16E-16	2.81E-16	2.79E-16
TB160	5.40E-14	8.59E-14	5.56E-14	5.54E-14
TM170	1.94E-16	7.53E-16	2.15E-16	2.23E-16
CD113M	5.93E-18	2.10E-17	6.76E-18	6.94E-18
XE135	1.13E-14	2.57E-14	1.18E-14	1.19E-14

Table 7.4-4 - Exposure-to-Dose-Rate Conversion Factors (5 pages)

Radionuclide	Lung	Bone Surface	Thyroid	CEDE
Submersion DRCF (Sv-m^3)/(Bq-sec)				
PM148	2.83E-14	4.24E-14	2.89E-14	2.89E-14
RH106M	1.41E-13	2.22E-13	1.44E-13	1.44E-13
AG111	1.23E-15	2.59E-15	1.27E-15	1.29E-15
PR142M	0.00E+00	0.00E+00	0.00E+00	0.00E+00
PM150	7.01E-14	1.09E-13	7.18E-14	7.17E-14
SM155	4.26E-15	1.37E-14	4.52E-15	4.65E-15
ER169	1.40E-18	5.52E-18	1.69E-18	1.74E-18
TM171	1.80E-17	7.68E-17	2.08E-17	2.15E-17
CM243	5.50E-15	1.50E-14	5.76E-15	5.88E-15
SM151	7.08E-21	7.09E-20	3.58E-20	3.61E-20
U234	4.38E-18	1.99E-17	6.69E-18	7.63E-18

This page intentionally left blank.

8. OPERATING PROCEDURES

This chapter presents the general operating procedures for the FuelSolutions™ Storage System described in this FSAR and shown on the drawings provided in Section 1.5. The procedures include canister preparation, transfer cask preparation, canister fuel loading, storage cask preparation, storage cask loading, canister retrieval, canister opening and fuel unloading, canister transfer from a storage cask to a transfer or a transportation cask, and canister transfer from a transfer cask to a transportation cask. The procedures address both horizontal and vertical canister transfer operations. An overview of these operations is provided in Section 1.2.2 and shown schematically in Figures 1.2-34 through 1.2-38 of this FSAR. In addition, schematics for horizontal and vertical transfer operations are shown in Figures 1.2-5, 1.2-20, 1.2-22, 1.2-29, and 1.2-30 of this FSAR.

The FuelSolutions™ support equipment described in Section 1.2.1.4, together with existing plant systems and equipment, are used to accomplish FuelSolutions™ Storage System operations. Table 8.0-1 presents a general list of this major operating equipment and tools. Generic procedures are provided herein to describe how the associated operations are to be performed. These procedures are not intended to be all-inclusive, but rather are provided as a generic guide for the preparation of more detailed site-specific procedures by a licensee. Existing 10CFR50[1] plant operational procedures may require revision or new procedures may be developed by a licensee to implement the FuelSolutions™ Storage System at a specific site. The resulting site-specific procedures should assure that the limiting conditions of operation delineated in the *technical specifications* contained in Chapter 12 of this FSAR are not exceeded.

The generic operating procedures for the FuelSolutions™ Storage System provided herein have been developed to assure that all operations required for canister loading, unloading, and transfer are performed safely with minimal personnel exposure, and maximum operational efficiency. These procedures are generally applicable to all FuelSolutions™ canister designs. Variations of these procedures that are unique to a specific FuelSolutions™ canister design, such as the FuelSolutions™ W74 canister fuel loading outside a spent fuel pool, are provided in Chapter 8 of the respective FuelSolutions™ Canister Storage FSAR. In preparing site-specific procedures, the licensee has the discretion to develop acceptable alternate means to accomplish the same operational objective provided they conform to the safety evaluation documented in this FSAR.

A synopsis of the generic operating procedures for the FuelSolutions™ system provided herein is as follows:

- A FuelSolutions™ canister is typically wet loaded and unloaded in the plant's spent fuel pool. Canister closure and opening operations are typically performed in the plant's cask decontamination area. Procedures for these operations are provided in Sections 8.1.4 through 8.1.9 and Section 8.2.3.
- The design of the FuelSolutions™ transfer and storage casks, and all FuelSolutions™ canisters provide the capability for both horizontal and vertical canister transfers consistent

[1] Title 10, U.S. Code of Federal Regulations, Part 50 (10CFR50), *Domestic Licensing of Production and Utilization Facilities*, 1995.

with site interface conditions. Procedures for these operations are provided in Sections 8.1.10, 8.1.11, 8.2.1, 8.2.2, and 8.2.4 through 8.2.6.

The generic operating procedures provided herein are intended to protect the health of workers and the general public and to minimize any occupational and radiological danger to life and property. ALARA principles have been incorporated throughout the design, installation, and operational phases of the FuelSolutions™ Storage System. Detailed procedures are to be developed by each licensee on a site-specific basis consistent with these principles. The operational features of the FuelSolutions™ Storage System contributing to good ALARA practices, operational efficiency, and safety include the following:

- The transfer cask lifting trunnions, top and bottom covers, as well as the canister top end shield plug and closure plates are designed for lifting and handling in accordance with NUREG-0612 and ANSI-N14.6. All handling operations in the plant's fuel building are performed in accordance with 10CFR50 operating procedures and NUREG-0612/ ANSI-N14.6 commitments.
- Horizontal movement of the cask should always be in a direction perpendicular to the plane of the trunnions. In this way, any inadvertent impact with an object will cause the cask to remain engaged with the lifting yoke and to rotate on the trunnions.
- The smooth stainless steel finish and painted surfaces on the transfer cask are designed to facilitate decontamination thus minimizing the potential to create airborne contamination due to the drying of residual fuel pool water on the transfer cask surface. Spraying/rinsing of the cask with clean demineralized water as it is placed into and removed from the spent fuel pool helps minimize and/or removes the majority of surface contamination. The remaining loose surface contamination is removed during the subsequent cask decontamination using clean rags, cleaning agents, and other standard means in the cask decon area. Only routine decontamination, if any, is required after this step.
- Care should be taken to protect the sealing surfaces of the transfer cask bottom cover and flange.
- No significant radioactive waste is generated during operations associated with the FuelSolutions™ Storage System or the ISFSI. Contaminated water from the spent fuel pool is returned to the pool or disposed of in accordance with the plant's 10CFR50 procedures.
- No significant radioactive effluents are produced during storage. Any radioactive effluents generated during canister loading or unloading are processed in accordance with the plant's 10CFR50 procedures, as applicable.
- Fuel CRUD (debris/residue) may be present during canister draining operations, especially in BWR facilities. This may require shielded filtration or additional measures at some plants. An evaluation of this potential may be made at each site by the licensee and may be included in the site-specific procedures, as required.
- The canister reflooding procedures provided herein are conservatively based on maximum initial temperatures, flow rates, and canister internal pressures for design basis fuel. Procedures for reflooding canisters with older colder fuel may be developed by the licensee on a plant/canister-specific basis.

- Potential hydrodynamic loads on the canister vent line and the spent fuel pool, and siphon effects on the canister and vent line potentially occurring during canister reflooding, should be considered on a site-specific basis.
- Given enough time and SNF decay heat, the water used to flood a newly loaded canister or reflood a dry loaded canister may begin to boil and potentially lead to airborne contamination. Consequently, a means to prevent this boiling and avoid a potential worker safety condition may be desirable, even though this phenomenon is not a nuclear or public safety issue. Accordingly, the design of the FuelSolutions™ Storage System accommodates the direct monitoring of the water temperature inside a flooded newly loaded or reflooded canister and provides a means (cask/canister annulus cooling) to cool the canister. A specific canister's SNF decay heat, the ambient conditions, the available annulus cooling water temperature and flow rate, as well as the lead time needed to initiate annulus cooling operations and prevent canister water boiling determines the temperature below which a canister's water should be maintained.
- The procedures for canister unloading provided herein allow SNF to be returned to the spent fuel pool if the canister is reopened. This process is essentially the reverse of that used to move fuel from the spent fuel pool storage racks to the canister for dry storage. However, precautions may be required for unloading since the possibility of handling damaged fuel may exist. The thermal stresses in the SNF cladding during canister reflooding and the potential for cladding failures and damaged fuel will be evaluated on a site-specific basis and, as a minimum, should address the following:
  - Spent fuel cladding thickness loss due to reactor operation, such as etching, corrosion, fretting, and scratching.
  - Thermal stress effects of quenching.
  - Initial pressure in the fuel rod.

  Plant-specific canister unloading procedures should allow for these possibilities. In addition, these procedures should provide mechanisms to assure that operating personnel exposure will be maintained ALARA throughout the unloading process.
- Procedures for transfer of a loaded canister into a transportation cask are also provided. This operation is similar to that of transferring a canister from a FuelSolutions™ W150 Storage Cask to a FuelSolutions™ W100 Transfer Cask. This operation is a prerequisite for off-site shipment of intact canisters, which is discussed in a separate transportation license application.

The general flow of FuelSolutions™ Storage System operations, as described in this chapter, is provided in Figure 8.0-1 through Figure 8.0-3.

Note that the procedures provided herein make reference to implementation of the FuelSolutions™ SFMS at an operating plant using on-site dry storage at an ISFSI as a base case. The same or similar procedures are applicable to decommissioning plants that are terminating their 10CFR50 operating license and stand-alone 10CFR72 ISFSIs or CISFs.

Table 8.0-1 - General Listing of Major Operating Equipment and Tools

Canister	W150 Storage Cask
Annulus Seal	W150 Upender/Downender
Shield Plug Restraints	W150 J-Skid
Automated Welding/Opening System	W150 Impact Limiters
Inner Top Closure Plate Strongback	W150 Horizontal Lid Handling Fixture
Vacuum Drying System	Standard Lifting Slings
Helium Leak Detection System	Empty Canister Lift Fixture
Calibrated Helium Leak Source	W100/W150 Cask Restraint Devices
W100 Transfer Cask	W100/W150 Docking Collar
Horizontal Transfer Skid (HTS)	W100 Cavity Spacer
Horizontal Transfer Trailer	W100/HTS Horizontal Lift Fixture
Hydraulic Ram System	Canister Fuel Assembly Spacers
Hydraulic Power Unit	W74 Damaged Fuel Cans
Cask Lifting Yoke	Miscellaneous Hoses and Fittings
Yoke Stand	Miscellaneous Hand Tools
Canister Vertical Lift Fixture	Air Pallet System
W100 Liquid Neutron Shield Overflow Bottle	Vertical Transporter
W100/Canister Annulus Pressurization Bottle	Lowboy Heavy Haul Trailer
Surveying Equipment	Transportation Cask

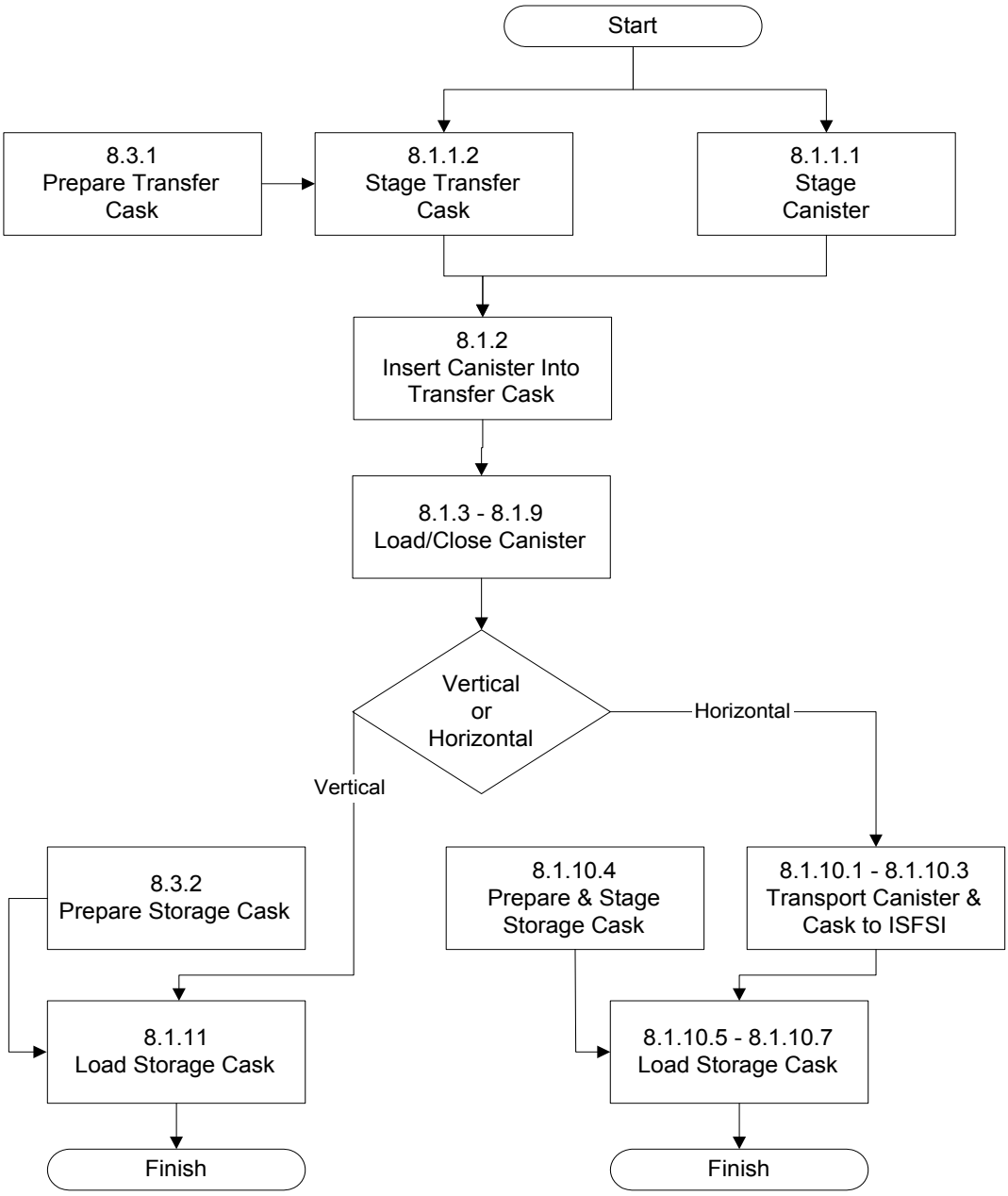

Figure 8.0-1 - Operations Flow Diagram to Load a Canister and Place the SNF Assemblies into Dry Storage

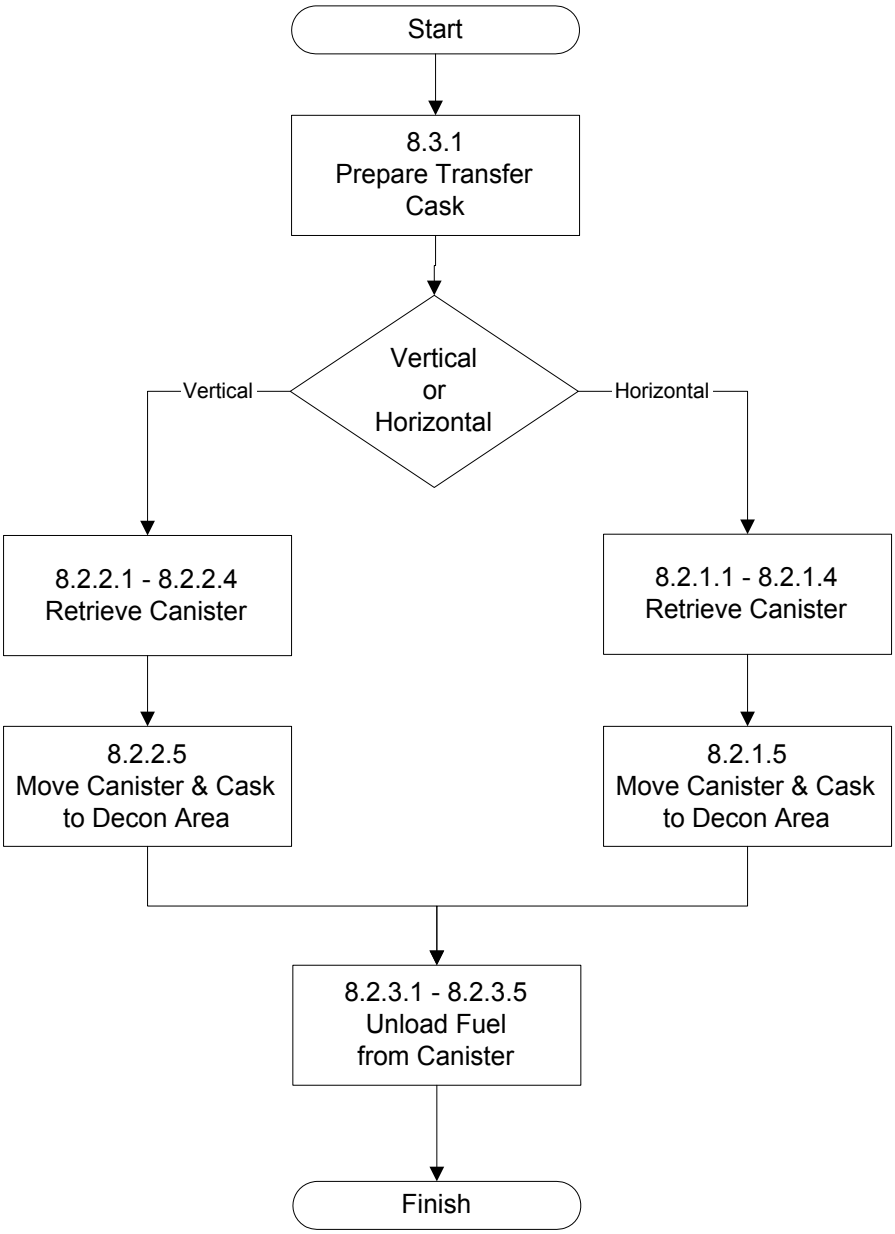

Figure 8.0-2 - Operations Flow Diagram to Retrieve a Canister from Dry Storage and Unload the SNF Assemblies into the Fuel Pool

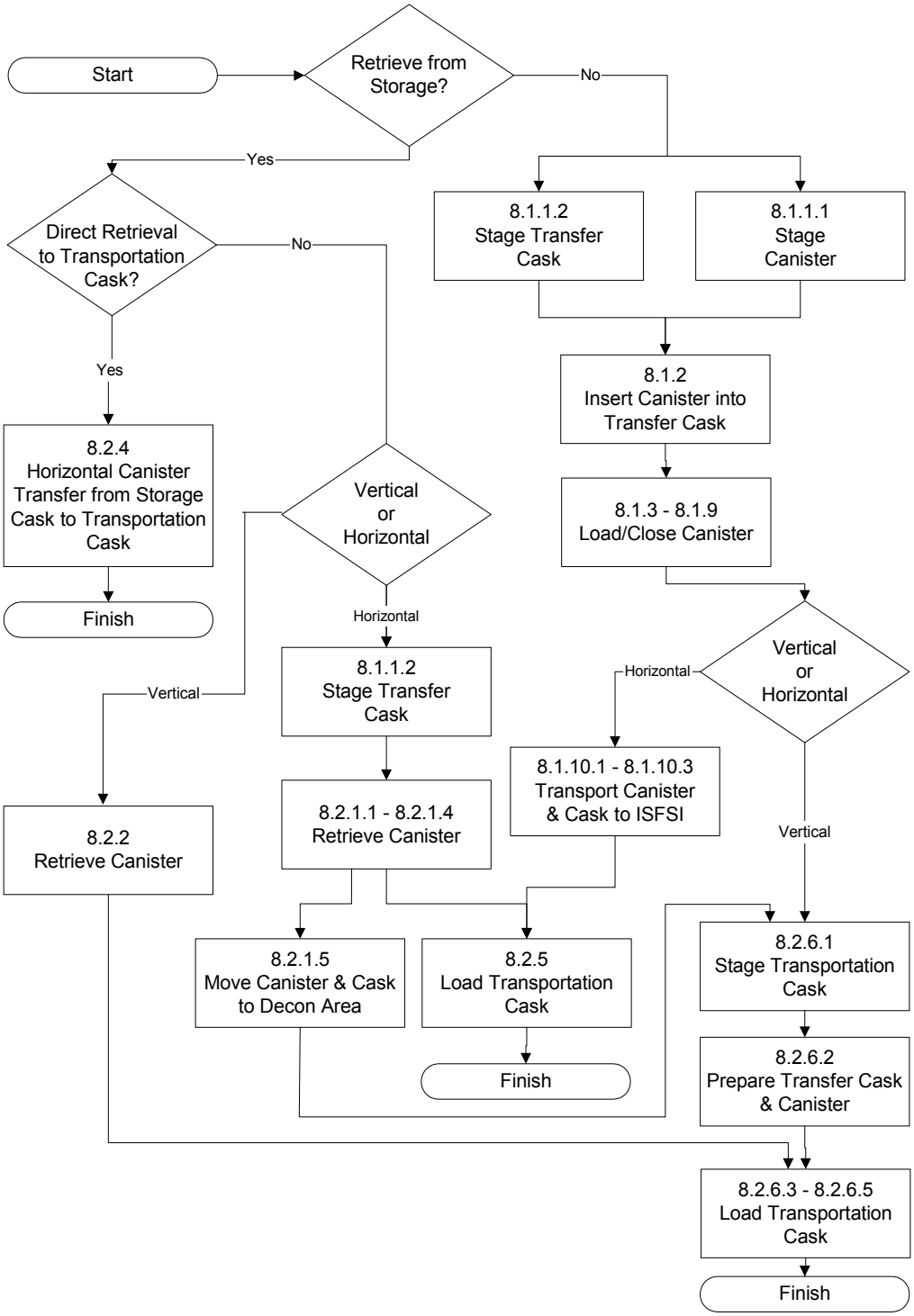

Figure 8.0-3 - Operations Flow Diagram to Place a Loaded Canister in a Transportation Cask

This page intentionally left blank.

8.1 Procedures for Loading the Cask in the Spent Fuel Pool

The following outline describes the major procedural steps for loading SNF assemblies into a FuelSolutions™ canister that has been placed in a FuelSolutions™ W100 Transfer Cask. These procedures address wet loading of SNF assemblies with a cask/canister placed in the plant's spent fuel pool. Alternate means of fuel loading, such as loading a transfer cask outside the spent fuel pool using a fuel assembly shuttle cask and shielded loading collar, are specific to certain FuelSolutions™ canisters (e.g., the FuelSolutions™ W74 canister). These fuel loading processes are discussed in the corresponding FuelSolutions™ Canister Storage FSAR (i.e., Section 8.3 of the FuelSolutions™ W74 Canister Storage FSAR[2]), when applicable.

Following canister loading, the cask/canister is moved to the cask decontamination area for decontamination. The canister inner closure plate is installed and the canister is drained, dried, backfilled with helium, and leak tested. The canister outer closure plate is then installed and the canister is moved to the cask handling area. The loaded canister is then transferred into a FuelSolutions™ W150 Storage Cask for on-site dry storage at an ISFSI or transferred into a transportation cask for an off-site shipment. A flowchart of the sequence of canister loading is provided in Figure 8.1-1.

8.1.1 Stage Canister and Transfer Cask

8.1.1.1 Preparation of a Canister for Fuel Loading

The following outline describes the major procedural steps for preparing a FuelSolutions™ canister for use. The inspection and any repair of a canister is to be performed in accordance with written procedures. The following tasks may be performed in a suitable staging area or inside the plant's cask receiving bay with the canister in a horizontal or vertical orientation, as practical.

1. Examine the empty canister for any physical damage that might have occurred since the receipt inspection was performed. The canister should be clean and any packaging material or loose debris removed.
2. Inspect the quick-connect fittings on the vent and drain ports for any physical damage. Repair or replace the fittings, as necessary.

   NOTE: The repair of any canister damage shall be performed and documented in accordance with an established procedure.
3. Trial fit the top end shield plug, inner closure plate, and outer closure plate to reconfirm acceptable fit-up.
4. Trial fit the AW/OS shield plate to the inner and outer closure plates.
5. Trial fit the canister vertical lift fixture lift adapter to the outer closure plate, if vertical canister transfer is to be performed.

[2] WSNF-223, *FuelSolutions™ W74 Canister Storage Final Safety Analysis Report*, Docket No. 72-1026, Energy*Solutions* Spent Fuel Division, Inc.

6. Remove the outer closure plate, inner closure plate, and top end shield plug.
7. Move the empty canister into the cask receiving bay within the plant's fuel building or to another suitable staging area where it can be installed in the transfer cask. This can be done in a variety of ways, including movement with a trailer, movement on air pallets (on or off the empty canister shipping skid), etc.

8.1.1.2 Staging of Transfer Cask

NOTE: Prior to performing the following operations, the transfer cask is to be prepared as described in Section 8.3.1.

1. Connect the cask lifting yoke to the hook of the fuel building crane. Position the crane and the lifting yoke in the plant's cask receiving bay with the empty transfer cask.
2. Engage the lifting yoke with the transfer cask lifting trunnions. Visually inspect the yoke lifting arms to assure that they are properly positioned and engaged on the cask lifting trunnions. Upend the transfer cask on the skid, if not already upended.
3. Place the empty cask in the cask decontamination area.

   CAUTION: Horizontal movement of the cask should always be in a direction perpendicular to the plane of the trunnions. In this way, an inadvertent impact with an object will cause the cask to remain engaged with the lifting yoke and rotate on the trunnions.

   NOTE: If vertical canister transfer is to be used, a cask support pad is to be prestaged in the decontamination area. The cask support pad holds the transfer cask high enough to allow removal and installation of the bottom cover bolts on the cask bottom end.

8.1.2 Insert Canister into Transfer Cask

1. Remove the cask top cover.
2. Using a crane and the empty canister vertical lift fixture, lower the empty canister into the transfer cask cavity and position the canister circumferentially to match the cask and canister alignment marks and to provide an approximately even canister/cask annular gap all around. The gap must be sufficient to permit installation and inflation of an annular seal.

   NOTE: This operation may be performed in the cask decontamination area, the plant's cask receiving bay, or a suitable staging area depending on plant-specific conditions.

   NOTE: Rigging and handling operations must comply with the plant's NUREG-0612/ANSI N14.6 commitments.
3. If required for the fuel type to be loaded, install SNF assembly spacers into the canister guide tubes, if not already installed.
4. If a canister is to be "short-loaded" (e.g., 20 SFAs for a W21 canister), install guide tube fuel stop(s) as shown on the applicable canister field assembly drawing (see Section 1.5.1 of the applicable Canister Storage FSAR).

5. Install the shield plug retainers on the transfer cask top flange. Rotate the shield plug retainers to the cask exterior to permit unobstructed access for canister fuel loading.

   NOTE: Alternatively, the shield plug retainers may be installed following canister fuel loading as the cask breaks the water surface, depending on plant conditions.

8.1.3 Place Canister and Transfer Cask into Fuel Pool

1. Connect the cask lifting yoke to the hook of the fuel building crane, if not already in place.
2. Hang the top shield plug from the lifting yoke using the associated yoke rigging cables. Adjust the rigging cables to provide a level shield plug orientation. Verify that the shield plug can be installed into the canister without binding. Remove the shield plug from the canister and lifting yoke and set it aside.

   NOTE: Rigging and handling operations must comply with the plant's NUREG-0612/ANSI N14.6 commitments.

   WARNING: The proper seating of the top shield plug should be assured to avoid potentially high radiation exposure of cask operating and plant personnel.

   NOTE: For the W74 canister, the upper basket assembly is removed from the canister at this point as discussed in Section 8.1.3 of the FuelSolutions™W74 Canister Storage FSAR.

3. Evaluate any plant-specific crane limitations and, if necessary, drain the liquid from the cask neutron shield to assure that the crane limits are not exceeded.
4. Fill the cask/canister annulus with clean demineralized water. Place the inflatable cask/canister annulus seal into the upper cask liner recess and seal the cask/canister annulus by pressurizing the seal with compressed air.

   NOTE: The use of clean demineralized water, an inflatable annulus seal, and the overflow/pressurization bottles prescribed below assure that the interior surfaces of the transfer cask and the exterior surfaces of the canister will not become contaminated during submersion in the fuel pool.

5. Check the cask bottom cover-to-flange joint for any visible leakage. If leakage occurs, drain the cask/canister annulus, remove the canister from the cask, and repeat the cask preparation sequence in Section 8.3.1.
6. Fill the canister cavity with water from the spent fuel pool, or an equivalent source.
7. Connect the overflow/pressurization bottles to the fittings of the cask/canister annulus and the liquid neutron shield, in order to maintain a positive head during pool immersion.
8. Connect a quick-connect fitting to the canister vent port fitting to vent the area below the top shield plug.
9. Position the cask lifting yoke and engage the transfer cask lifting trunnions.
10. Visually inspect the yoke lifting arms to assure that they are properly positioned and engaged on the cask lifting trunnions.

11. Lift the cask just far enough to allow the weight of the cask to be distributed onto the yoke lifting arms. Re-inspect the lifting arms to assure that they are properly positioned on the cask trunnions.

8.1.4 Load Fuel into Canister

1. Verify that the spent fuel pool water level is at or above the minimum required for fuel transfer operations, including compensation for the water volume displaced by the cask.
2. Lift the cask/canister and position it over the cask loading area of the spent fuel pool in accordance with the plant's 10CFR50 cask handling procedures.

   CAUTION: Horizontal movement of the cask should always be in a direction perpendicular to the plane of the trunnions. In this way, any inadvertent impact with an object will cause the cask to remain engaged with the lifting yoke and to rotate on the trunnions.
3. Lower the cask into the spent fuel pool until the bottom of the cask is at the height of the pool water surface. As the cask is lowered into the fuel pool, spray the exterior surface of the cask and lifting yoke with clean demineralized water to wet the surface and ease decontamination when the cask is removed from the pool.
4. Place the cask in the location of the spent fuel pool designated as the cask loading area.

   NOTE: If the plant's spent fuel pool has a cask shelf or platform below the water level designed to keep the fuel building crane hook dry, the cask can then be set on this shelf or platform. At this time, the yoke can be disengaged and a yoke extension can be installed between the yoke and the crane hook to prevent immersion of the crane hook. The yoke should be rinsed with clean demineralized water as it is removed, and the extended yoke should be similarly rinsed as it is immersed in the pool water. The extended yoke should then be re-engaged with the cask trunnions. Visual confirmation of proper trunnion engagement should be made. The cask can then be lowered into the designated cask loading area.
5. Disengage the lifting yoke from the cask lifting trunnions and move the yoke clear of the cask. Remove the lifting yoke from the spent fuel pool. Spray the lifting yoke with clean demineralized water as it is raised out of the pool.
6. Move an SNF assembly[3] that meets the *technical specification* requirements contained in Section 12.3 of the respective FuelSolutions™ Canister Storage FSAR from the fuel pool storage rack position, in accordance with the plant's 10CFR50 fuel handling procedures. Place the SNF assembly into a visual inspection area to record the identification number.
7. Prior to insertion of the SNF assembly into the canister, the identification of the SNF assembly is to be independently verified by two individuals using an underwater video camera or other means. Read and record the SNF assembly identification number from the SNF assembly. Check this identification number against the site-specific canister loading plan prepared by the licensee. Also check the plant records to verify that the *technical specification* requirements contained in Section 12.3 of the respective FuelSolutions™

[3] The SNF assembly may include irradiated hardware integral with the assembly.

Canister Storage FSAR are met, which indicates that the SNF assembly is acceptable for dry storage.

8. Position the SNF assembly for insertion into the selected canister guide tube and load the SNF assembly. Prior to release of the SNF assembly, record the location of the SNF assembly in the canister and verify its location against the canister loading plan.
9. Repeat Steps 6 through 8 for each SNF assembly to be loaded into the canister.
10. If there are not enough SNF assemblies to fully load the canister, install dummy fuel assemblies in the empty guide tube openings that do not have mechanical blocks.

    NOTE: The dummy fuel assemblies should have approximately the same external dimensions, total weight, and weight per unit length as the fuel type being loaded to maintain the overall weight of a fully loaded canister.

    NOTE: For the W74 canister, the upper basket assembly is installed at this point and is loaded with SNF assemblies as discussed in Section 8.1.4 of the FuelSolutions™ W74 Canister Storage FSAR.

8.1.5 Remove Loaded Cask/Canister from Fuel Pool

1. Suspend the top shield plug from the lifting yoke using the associated yoke rigging cables.

   NOTE: Rigging and handling operations must comply with the plant's NUREG-0612/ANSI N14.6 commitments.

2. After spraying the top shield plug, rigging cables, and yoke with clean demineralized water as they enter the fuel pool, position the lifting yoke and the top shield plug over the cask/canister and lower the shield plug into the canister.
3. Visually verify that the top shield plug is properly seated in the canister.

   WARNING: The proper seating of the top shield plug should be assured to avoid potentially high radiation exposure of cask operating and plant personnel.

4. Position the lifting yoke and engage the cask lifting trunnions. Verify that the lifting yoke is properly engaged.
5. Lift the cask just far enough to allow the weight of the cask to be distributed onto the yoke lifting arms. Re-inspect the lifting arms to assure that they are properly positioned on the cask trunnions.
6. Raise the cask to near the pool surface, spraying the lifting yoke with clean demineralized water as it becomes exposed to air. Prior to raising the top of the cask above the water surface, stop vertical movement.

   NOTE: In plants where yoke extensions have been added to preclude immersion of the crane hook and where underwater cask shelves or platforms exist, the cask should be placed on that shelf or platform. The yoke should be disengaged and removed from the cask and raised out of the pool water. The yoke should be rinsed with clean demineralized water as it is being removed. The yoke extension should be removed and the yoke should be sprayed with clean

demineralized water as it is re-immersed in the pool and re-engaged with the cask trunnions. Visual confirmation of proper trunnion engagement should be made.

7. With the cask near the pool surface, inspect the top shield plug to verify that it is properly seated in the canister. If not, lower the cask and reposition the top shield plug. Repeat Steps 2 through 7 as necessary.

   WARNING: The proper seating of the top shield plug should be assured prior to lifting the cask above the pool surface to avoid potentially high radiation exposure of cask operating and plant personnel.

8. Rotate the temporary shield plug retainers into place.

   NOTE: Alternatively, if the shield plug retainers have not yet been installed due to plant conditions, they may be installed as the cask breaks the water surface.

9. Continue to raise the cask from the pool and spray the exposed portion of the cask and lifting yoke with clean demineralized water, until the top region of the cask is accessible.

10. Check the radiation levels near the center of the top shield plug, in accordance with plant-specific procedures and ALARA requirements (discussed in Section 10.1.3.2 of this FSAR). If the radiation levels exceed these requirements, return the cask to the cask loading area in the spent fuel pool and notify the cognizant management representative. Await further instructions before proceeding. If radiation levels are acceptable, proceed.

    NOTE: Temporary shielding may be used to lower personnel radiation exposures. The shielding should be installed in accordance with plant-specific procedures.

11. Remove sufficient water from the top of the cask/canister back into the pool, to expose the surface of the shield plug.

12. Lift the cask from the spent fuel pool. As the cask is raised from the pool, continue to spray the cask with clean demineralized water.

13. Record the time of removal of the transfer cask from the fuel pool (i.e., the time the cask bottom end breaks the pool water surface).

14. Move the transfer cask with the loaded canister to the cask decontamination area.

    CAUTION: Horizontal movement of the cask should always be in a direction perpendicular to the plane of the trunnions. In this way, any inadvertent impact with an object will cause the cask to remain engaged with the lifting yoke and to rotate on the trunnions.

    NOTE: If vertical canister transfer is to be used, a cask support pad is to be prestaged in the decontamination area. The cask support pad holds the transfer cask high enough to allow removal and installation of the bottom cover bolts on the cask bottom end.

8.1.6 Decontaminate Cask Exterior

1. Disconnect the lifting yoke rigging cables from the top shield plug.

2. After confirming that the lifting cables have been disconnected from the shield plug, disengage the lifting yoke from the trunnions and move it clear of the cask.

WARNING: Assure that the top shield plug is not lifted during disengagement of the lifting yoke from the trunnions and removal from cask to avoid potentially high radiation exposure of cask operating and plant personnel.

3. Disconnect the overflow/pressurization bottles from cask/canister annulus and neutron shield fittings.
4. If empty, fill the transfer cask neutron shield with liquid.
5. Reattach the neutron shield overflow/pressurization bottle.
6. If required by site-specific seismic criteria, install the cask seismic restraint members.
7. Check the radiation levels near the mid-plane (mid-point) of the transfer cask to assure that dose rates are below maximum expected values, in accordance with site-specific procedures and ALARA requirements (discussed in Section 10.1.3.2 of this FSAR). If the radiation levels exceed these requirements, notify the cognizant management representative. Await further instructions before proceeding. If radiation levels are acceptable, proceed.

   NOTE: Temporary shielding may be used to lower personnel radiation exposures. The shielding should be installed in accordance with plant-specific procedures.

8. Decontaminate the accessible cask exterior surface. Take swipes of the accessible surfaces and check for smearable contamination, in accordance with the *technical specification* requirements contained in Section 12.3 of this FSAR.
9. Remove the temporary shield plug retainers.
10. Deflate and remove the inflatable cask/canister annulus seal.
11. Decontaminate the exposed surfaces of the canister shell perimeter adjacent to the shield plug and the top interior surface of the cask and top exterior surface of the canister above and adjacent to the annulus seal location.

8.1.7 Install Canister Inner Closure Plate

1. Verify that the neutron shield cavity is full. Connect a drain line to the cask cavity drain port and allow water from the annulus to drain out until the water level is approximately 12 inches below the top edge of the canister shell. Take swipes around the outer surface of the canister shell and check for smearable contamination, in accordance with the *technical specification* requirements contained in Section 12.3 of this FSAR.

   NOTE: If the exterior of the canister has unacceptable contamination, the transfer cask/canister annulus may be drained and flooded as many times as necessary with clean demineralized water or plant-approved decontamination fluid to flush the canister's exterior of any unacceptable contamination. If the unacceptable contamination persists, return the loaded transfer cask to the fuel pool, remove SNF assemblies from the canister, remove the empty transfer cask and canister from the fuel pool, and remove the empty canister from the transfer cask for unrestricted access to the canister's exterior for decontamination following Sections 8.2.3.4 through 8.2.3.7.

2. Cover the cask/canister annulus to prevent debris and weld splatter from entering the annulus (a lead "snake" can be used for this purpose).

3. On a plant/canister-specific basis, the canister vent port quick-connect fitting may be removed and a temperature measuring device with a quick-connect fitting installed to monitor the canister's water temperature while continuing to vent the canister. If the canister water temperature reaches 180°F, reinstall the cask/canister annulus seal and begin circulating cooling water through the cask canister annulus to cool the canister and prevent boiling of the canister water (see Steps 2 - 6 of Section 8.2.3.1).

   NOTE: A specific canister's SNF decay heat, the prevailing ambient conditions, available annulus cooling water temperature and flow rate, as well as the lead time needed to initiate annulus cooling operations and prevent canister water boiling will determine the temperature below which a canister's water should be maintained.

   NOTE: Prevention of canister water boiling is recommended to assure worker safety, but is not required for nuclear safety.

4. Connect the vacuum drying system dewatering pump to the canister drain port. Remove approximately 15 gallons of water from the canister to lower the water level below the bottom of the shield plug. Return the water to the spent fuel pool.

   NOTE: Temporary shielding may be used to lower personnel radiation exposures. The shielding should be installed in accordance with plant-specific procedures.

5. Check the radiation levels at the center of the top shield plug and perform radiation surveys in accordance with the site-specific procedures and ALARA requirements (discussed in Section 10.1.3.2 of this FSAR). If the radiation levels exceed these requirements, notify the cognizant management representative. Await further instructions before proceeding. If radiation levels are acceptable, proceed.

6. Install the AW/OS onto the inner closure plate. Place the inner closure plate with the AW/OS onto the canister. Verify proper positioning and fit-up of the inner closure plate with the canister shell prior to welding.

   NOTE: Rigging and handling operations must comply with the plant's NUREG-0612/ANSI N14.6 commitments.

7. Prior to the initiation of welding, begin monitoring the perimeter of the inner closure plate and vent and drain port weld regions for the presence of hydrogen using a calibrated device capable of measuring concentrations of hydrogen to 0.4 % by volume.

8. If hydrogen concentrations of 0.4 % by volume or more are detected, connect a "welding grade" argon source to the canister vent port. Purge the canister with argon gas prior to and as required during inner closure plate welding operations until the root pass of the weld is completed.

   CAUTION: If inner closure plate and vent and drain port body tack and root pass welding begins without an argon purge through the canister's vent port, the vent port should remain vented and the perimeter of the inner closure plate and vent and drain port weld regions should continue to be monitored for the presence of hydrogen.

9. Tack weld the inner closure plate to the canister shell. Tack weld the vent and drain port bodies to the inner closure plate. Place the inner closure plate and the vent and drain port body root pass welds. Just prior to completion of the second vent or drain port body root pass

weld, disconnect the argon gas source from the vent port. Connect a hose to the canister vent port and route the hose to the spent fuel pool (or other suitable water receiving vessel or location). Vent the canister to assure that internal pressure remains atmospheric during welding operations. Complete the root pass of this last inner closure plate weld.

10. Perform a dye penetrant inspection of the inner closure plate and the vent and drain port adapter root pass welds in accordance with ASME BPVC[4] Subsubarticle NB-5350.
11. With the canister vented through its vent port, complete the inner closure plate and the vent and drain port body welds.

    CAUTION: The canister should remain vented through its vent port at all times (except when used for purging) until the immediate start of the draining process.

12. Perform a dye penetrant weld examination of the completed inner closure plate and vent and drain port body welds in accordance with NB-5350.

8.1.8 Drain and Backfill Canister with Helium

1. Re-verify that the cask/canister annulus and neutron shield cavities are full before removing additional water from the canister.
2. Install the inner closure plate strongback.
3. Isolate the vacuum drying system and open the compressed gas supply valve to allow the compressed inert gas (e.g., argon, helium, or nitrogen) to force the water from the canister cavity through the drain port to a maximum pressure of 30 psig. Monitor the canister pressure during draining using the gauge on the vacuum drying system.
4. Once water stops flowing from the canister, continue to purge with compressed inert gas for 30 minutes minimum. Isolate the compressed gas supply and disconnect the canister drain port hose.

   NOTE: Discontinue cask/canister annulus cooling if being performed and remove the cask/canister annulus seal.

5. Check the radiation levels near the center of the canister top end and near the mid-plane (mid-point) of the cask to assure that dose rates are below maximum expected values, in accordance with site-specific procedures and ALARA requirements (discussed in Section 10.1.3.2 of this FSAR). If the radiation levels exceed these requirements, notify the cognizant management representative. Await further instructions before proceeding. If radiation levels are acceptable, proceed.
6. Open the valve on the suction side of the pump and start the vacuum drying system to draw a vacuum on the canister cavity. The cavity pressure should be reduced in a step-wise progression (for example, 100 torr, 50 torr, 25 torr, 15 torr, 5 torr, and 3 torr). After pumping down to each level, the pump is valved off and stopped, and the cavity pressure monitored. The cavity pressure will rise as water and other volatiles in the cavity evaporate. When the

[4] American Society of Mechanical Engineers (ASME) Boiler and Pressure Vessel Code (BPVC) Section III, Division 1, Subsection NB, *Class 1 Components*, Article NB-5000, *Examination*, 1995 Edition.

cavity pressure stabilizes, the vacuum pump is reactivated and the pressure reduced to the next step. It may be necessary to repeat some steps, depending on the rate and extent of the pressure increase. Maintain the vacuum until a stable vacuum pressure has been achieved in accordance with the *technical specification* requirements contained in Section 12.3 of this FSAR.

NOTE: Vacuum drying times are controlled by the Vacuum Drying Program established in accordance with the technical specification requirements contained in Section 12.3 of the respective canister FSAR.

NOTE: The vacuum drying system may be connected to both the vent and the drain ports to expedite the drying process.

CAUTION: During vacuum drying, the cask/canister annulus water level should be maintained at approximately 12 inches below the top edge of the canister shell.

7. Isolate the vacuum drying system from the canister. Connect a supply of compressed helium gas (if not already connected) to the canister vent port via the vacuum drying system.
8. Allow compressed helium to flow into the canister cavity.
9. Pressurize the canister with 99.995% pure helium gas to a minimum of 12.5 psig in accordance with the requirements of Article NB-6000. Perform the helium leak rate test of the inner top closure plate and the vent and drain port body welds, in accordance with the *technical specification* requirement contained in Section 12.3 of this FSAR and Subarticle NB-6300. This satisfies both pneumatic pressure testing and helium leak testing requirements.
10. On demonstrating compliance with the *technical specification* requirement, isolate the source of compressed helium and lower the canister pressure by connecting a hose to the canister drain port which is routed into the spent fuel pool (or other suitable receiving vessel or location).
11. Re-evacuate the canister by repeating Step 6, until a stable vacuum pressure has been achieved and held in accordance with the *technical specification* requirements contained in Section 12.3 of this FSAR.
12. Isolate the vacuum drying system from the canister. Connect a supply of 99.995% pure compressed helium gas to the canister vent port via the vacuum drying system (if not already connected) with a calibrated in-line (temperature and pressure compensating) mass flow meter with an integrated read-out.
13. Re-pressurize the canister, allowing a specified mass of helium to flow into the canister cavity, in accordance with the *technical specification* requirement contained in Section 12.3 of the respective FuelSolutions™ Canister Storage FSAR. Isolate the source of compressed helium and disconnect the vacuum drying system from the canister.

    NOTE: The amount of helium allowed to flow into a canister is dependent on the canister and/or fuel assembly types. The amount of helium required for a fully loaded canister is provided in Table 8.1-1 of the respective FuelSolutions™ Canister Storage FSARs. If dummy fuel assemblies are loaded in place of actual SNF assemblies, the quantity of helium backfill gas may need to be adjusted to compensate for the differential volume between the dummy

assemblies and the assumed SNF assembly volumes presented in Table 8.1-1. The following methodology shall be used:

a. Determine the volume of the dummy assemblies by measurement or calculation.

b. Calculate the resulting canister differential free volume as follows:

$$\Delta V_{FREE} = N(V_{PAYLOAD} - V_{DUMMY})$$

where:

ΔV_{FREE} = *Change in canister free volume due to replacement of SNF assemblies with dummy assemblies (liters).*

N = *Number of SNF assemblies replaced with dummy assemblies.*

$V_{PAYLOAD}$ = *Average single assembly volume from Table 8.1-1 for the corresponding canister loading condition [fuel type and configuration] (liters).*

V_{DUMMY} = *Average volume of dummy assemblies (liters).*

c. Once the differential free volume is determined, the resulting quantity of helium backfill gas is calculated as follows:

$$m_{He-FINAL} = m_{He}\left(1 + \frac{\Delta V_{FREE}}{V_{FREE}}\right)$$

where:

$m_{He-FINAL}$ = *Final adjusted quantity of helium backfill gas (grams He).*

m_{He} = *Quantity of canister backfill gas from Table 8.1-1 for the corresponding canister load condition (fuel type and configuration) (liters He).*

V_{FREE} = *Canister minimum free volume from Table 8.1-1 for the corresponding canister loading condition (fuel type and configuration) (liters).*

14. Place the prefabricated port covers over the vent and drain ports. Tack the covers in place, as required, and place the root pass weld to the vent and drain port bodies. Complete the vent and drain port cover welds.

15. Perform a dye penetrant examination of the completed vent and drain port cover welds, in accordance with NB-5350.

16. Remove the AW/OS from the canister.

    NOTE: The inner closure plate strongback may be removed at any time after Step 12.

8.1.9 Install Canister Outer Closure Plate

1. Install the AW/OS onto the canister outer top closure plate, and place the outer top closure plate with the AW/OS onto the canister. Verify proper positioning and fit-up of the outer top closure plate with the canister shell, prior to welding.

   NOTE: Rigging and handling operations must comply with the plant's NUREG-0612/ANSI N14.6 commitments.

2. Place the outer top closure plate root pass weld.
3. Perform a dye penetrant examination of the outer top closure plate root pass weld, in accordance with NB-5350.
4. Place additional outer top closure plate weld passes until approximately ½ of the outer top closure weld preparation depth is filled.
5. Perform a dye penetrant examination of the outer top closure plate intermediate level weld surface, in accordance with NB-5350.
6. Complete the outer closure plate weld.
7. Perform a dye penetrant examination on the completed outer closure plate weld, in accordance with NB-5350.
8. Remove the AW/OS from the canister.
9. Enter the date on the canister nameplate located on the outer closure plate and record the canister serial number.
10. Connect a drain line to the cask cavity drain port and remove the remaining water from the cask/canister annulus.

8.1.10 Transfer Canister from Transfer Cask to Storage Cask (Horizontally)

This section and Section 8.1.11 discuss the cask handling, canister transfer, and storage operations following canister loading and closure. If the canister is to be transferred to the storage cask horizontally, the procedures in this section apply and those in Section 8.1.11 do not apply. Conversely, if the canister is to be transferred to the storage cask vertically, then the procedures in Section 8.1.11 apply and those in this section do not apply.

The following outline describes the major procedural steps for transferring a loaded FuelSolutions™ canister from a FuelSolutions™ W100 Transfer Cask to a FuelSolutions™ W150 Storage Cask at the ISFSI, using horizontal canister transfer. The transfer cask is placed on the transfer trailer in the plant's cask receiving bay and towed to the ISFSI. The transfer cask is aligned and docked with the downended storage cask. Using a hydraulic ram, the canister is transferred to the storage cask, which is then upended and moved to its storage position on the ISFSI pad.

8.1.10.1 Install Transfer Cask Top Cover

NOTE: Prior to performing the following operations, canister loading and closure is to be completed, as described in Sections 8.1.1 through 8.1.9 above.

1. Lift the transfer cask top cover into place and install the bolts.

   NOTE: Rigging and handling operations must comply with the plant's NUREG-0612/ANSI N14.6 commitments.

2. Tighten the bolts to an AISC "snug tight" condition using a star pattern.

8.1.10.2 Downend Transfer Cask on Horizontal Transfer Trailer

1. Connect the cask lifting yoke to the hook of the fuel building crane.
2. Position the horizontal transfer trailer so that the transfer skid is accessible to the cask handling crane. Support the trailer on its vertical jacks. Verify that the skid tie-downs are secured. Remove the top halves of the transfer skid pillow blocks.
3. Engage the lifting yoke with the lifting trunnions on the transfer cask. Lift the cask just far enough to allow the weight of the cask to be distributed onto the yoke lifting arms. Re-inspect the lifting arms to assure that they are properly positioned on the cask trunnions.

   NOTE: The neutron shield overflow/pressurization bottle may be disconnected from the neutron shield while the transfer cask is being moved to the horizontal transfer trailer.

4. Lift the cask from the cask decontamination area over the transfer skid on the transfer trailer. Verify the proper orientation of the offset lower trunnions with the transfer skid pillow blocks. Rotate the cask, as required, to align the cask lower trunnions with the transfer skid pillow blocks at the back end of the transfer trailer.

   CAUTION: Horizontal movement of the cask should always be in a direction perpendicular to the plane of the trunnions. In this way, any inadvertent impact with an object will cause the cask to remain engaged with the lifting yoke and to rotate on the trunnions.

5. Position the cask lower trunnions onto the transfer skid pillow blocks.
6. Lower the cask while simultaneously moving the crane away from the lower trunnions toward the upper trunnion pillow blocks.
7. Lower the cask onto the skid until the weight of the cask is distributed to the trunnion pillow blocks.
8. Inspect the trunnions to assure that they are properly seated onto the skid.
9. Disengage the lifting yoke from the transfer cask lifting trunnions.
10. Install the top halves of the transfer skid pillow blocks.

    NOTE: If previously disconnected, reconnect the neutron shield overflow/pressurization bottle to the transfer cask neutron shield vent fitting.

11. Decontaminate the exterior surface of the transfer cask's bottom cover assembly. Take swipes of the bottom cover exterior surfaces and check for smearable contamination, in accordance with the *technical specification* requirements contained in Section 12.3 of this FSAR.

8.1.10.3 Tow Transfer Cask to ISFSI

1. Lower the transfer trailer off of its vertical jacks.

   CAUTION: Movement of the loaded transfer cask outside the fuel building should not be initiated during weather conditions that could create lightning or flooding conditions at the ISFSI or on the transfer route.

2. Using a suitable tow vehicle and ballast, move the transfer trailer and the cask from the plant's cask receiving bay to the ISFSI along a designated transfer route at a speed of no greater than 5 mph.

   CAUTION: The designated route is not to pass over bridges or roadways that permit the transfer trailer to get closer than approximately one trailer width from a steep drop-off that exceeds the maximum permissible handling height of the transfer cask, unless suitable barriers have been installed.

   NOTE: The tow vehicle fuel supply shall not exceed 70 gallons.

   NOTE: The horizontal transfer trailer and skid are designed to maintain the height of the transfer cask during transport within the maximum handling height specified in the technical specification contained in Section 12.3 of this FSAR. A 10CFR72.212 safety evaluation is required to address site-specific conditions along the designated transfer route.

3. During canister transport, monitor the temperature of the transfer cask using the installed thermocouple, in accordance with the *technical specification* requirements contained in Section 12.3 of the respective FuelSolutions™ Canister Storage FSAR. If the cask temperature reaches the minimum permissible temperature, return the loaded transfer cask to a heated building to avoid freezing of the liquid neutron shield contents.

8.1.10.4 Stage Empty Storage Cask

NOTE: Prior to performing the following operations, the empty storage cask is to be prepared as described in Section 8.3.2. In addition, position the upender/downender over the storage cask impact limiters prior to any upending/downending of a loaded canister.

1. Activate the upender/downender to rotate the storage cask to the horizontal orientation. Level storage cask to within ± 5º of horizontal.

   NOTE: During rotation, the upender/downender is designed to maintain the height of the storage cask within the maximum handling height specified in the technical specification contained in Section 12.3 of this FSAR.

8.1.10.5 Align and Dock Transfer Cask with Storage Cask

1. Once at the ISFSI, or the area designated to perform horizontal canister transfer operations, position the transfer trailer to within a few feet of the empty storage cask.

   NOTE: Horizontal canister transfer operations may be performed anywhere within the ISFSI or the plant's owner-controlled area which can accommodate the storage cask impact limiter based on a 10CFR72.212 safety evaluation.

2. Check the position of the transfer trailer to assure the centerline of the storage cask and transfer cask are within the range of adjustability of the transfer skid. If the trailer is not properly oriented, reposition the trailer as necessary.

3. Using a portable crane and a sling, engage the transfer cask bottom cover lifting eye, unbolt the transfer cask bottom cover, and remove it. Remove the cask cavity spacer with the bottom cover (if installed).

NOTE: The horizontal lid handling fixture may be needed for this operation if the cask cavity spacer is installed.

NOTE: Care should be taken to protect the sealing surfaces of the transfer cask bottom cover and flange.

4. Slowly back up the trailer to position the transfer trailer to within a few inches of the storage cask and engage the trailer brakes. Disengage the tow vehicle and drive it clear of the trailer.
5. Remove the skid tie-downs and position the transfer cask horizontally so that the bottom end is within a few inches of the top end of the storage cask using the skid positioning system. Raise/lower the transfer cask to approximately the same height as the storage cask, using the trailer hydraulic jacks for vertical positioning. Using the skid positioning system, optical survey equipment, and the alignment marks on the transfer cask and the storage cask, adjust the position of the transfer cask until it is aligned horizontally and vertically with the storage cask to within ± 1/8 inch.

   NOTE: Care should be taken to protect the sealing surfaces of the transfer cask bottom cover and flange.
6. Fully insert the transfer cask into the shielded docking collar on the storage cask access opening using the skid positioning system.
7. Secure the lower transfer cask trunnions to the storage cask via the shielded docking collar using the cask restraints.

   WARNING: The transfer cask lower trunnions shall be secured to the storage cask to avoid separation of the casks during canister transfer and potentially high radiation exposure of cask operating and plant personnel.
8. After the cask restraints are installed, use the optical survey equipment to verify that the alignment of the transfer cask is in accordance with the Step 5 requirement.
9. Remove the transfer cask ram access cover on the top end of the cask.
10. Set up the hydraulic ram and attach it to the transfer cask top cover. Using optical survey equipment and the alignment marks on the transfer cask and the hydraulic ram, adjust the position of the ram until it is aligned horizontally and vertically with the transfer cask.

8.1.10.6 Transfer the Canister to the Storage Cask

1. Activate the hydraulic ram and push the canister into the storage cask, until it is fully inserted. The canister is fully inserted when a measuring device on the hydraulic ram confirms that the prescribed distance has been traveled after the canister is inserted into the storage cask.

   NOTE: Canister transfers between casks should be continuously monitored by health physicists/radiation control technicians to assure that unexpected radiation fields are not experienced. The health physicist/radiation control technicians should monitor and control operator stay times and perform air monitoring, as required in site-specific operating procedures. Temporary shielding may be used to lower personnel radiation exposures. Shielding should be installed in accordance with plant-specific procedures.

NOTE: For this configuration, the canister is pushed from the transfer cask to the storage cask. Should it become necessary to reverse this process, move the hydraulic ram to the bottom end of the storage cask and push the canister back into the transfer cask.

2. Monitor the temperature of the storage cask using the installed thermocouples in accordance with the *technical specification* requirements contained in Section 12.3 of the respective FuelSolutions ™ Canister Storage FSAR. If the cask temperature reaches the maximum permissible temperature, immediately upend the loaded storage cask or transfer the loaded canister back to the transfer cask per Section 8.2.1.3.
3. Retract the ram.
4. Perform a general radiation survey of the storage cask to assure that dose rates are within maximum expected values. The dose rates measured near the midpoint of the storage cask side should be in accordance with the *technical specification* requirements contained in Section 12.3 of this FSAR.
5. Disengage the hydraulic ram from the transfer cask and move it clear of the transfer cask.
6. Remove the cask restraints from the storage cask.
7. Using the skid positioning system, disengage the transfer cask from the docking collar on the storage cask.
8. Using the skid positioning system, position the skid on the trailer to install the tie-downs, secure the skid to the transfer trailer, and retract the vertical jacks.
9. Re-engage the tow vehicle and disengage the trailer brakes. Tow the transfer trailer and cask away from the storage cask to reduce occupational exposure.
10. Remove the docking collar from the storage cask using a portable crane.
11. Install the horizontal lid handling fixture on the storage cask cover (if not already installed) and lift the cover into place using a portable crane. Install the bolts to the original assembly requirements using a star pattern. Install the storage cask tamper-indicating device.
12. Install the storage cask nameplate, if not already installed.
13. Install the transfer cask ram access cover and tighten its bolts to an AISC “snug tight” condition in a star pattern.
14. Check the transfer cask bottom flange seal surface and bottom cover seals for any condition that might affect water leak tightness of this joint.
15. Install the transfer cask bottom cover and tighten its bolts to an AISC “snug tight” condition using a star pattern. If required, the cask canister spacer will also be installed with the bottom cover.
16. Tow the transfer trailer and the empty transfer cask to the designated equipment storage area.

8.1.10.7 Upend Storage Cask and Position Cask on ISFSI Pad

1. Remove the temporary outlet vent shielding and reinstall the outlet vent screens if removed.
2. Activate the upender/downender to rotate the storage cask to the vertical orientation for canister storage.

3. Remove the storage cask from the upender/downender. If needed, move the storage cask to its storage position on the ISFSI pad using air pallets. Take measurements to assure that spacing distances between storage casks are in accordance with the *technical specification* contained in Section 12.3 of this FSAR.
4. Remove the air pallets.
5. Reinstall the inlet vent screens, if removed.
6. Perform a radiation dose survey for the loaded storage cask. Measure and record the doses near the midpoint of the cask side at several locations around the circumference, the screen surfaces of the inlet and outlet vents, and at several locations on the top lid. These dose rates should be in accordance with the *technical specification* requirements contained in Section 12.3 of this FSAR.
7. Install and activate the storage cask temperature monitoring system. Check that the temperatures are in accordance with the *technical specification* requirements contained in Section 12.3 of the respective FuelSolutions™ Canister Storage FSAR.
8. Install the storage cask lightning protection system, if required.
9. Close and lock the ISFSI access gate. Activate the security measures and begin periodic surveillances.
10. Throughout the storage period, conduct periodic surveillances of the storage cask using either of the follow methods:
    - *Storage Cask Periodic Temperature Monitoring:* Perform periodic monitoring of storage cask concrete temperature using the thermocouple installed in the storage cask concrete in accordance with the *technical specification* requirements contained in Section 12.3 of the respective FuelSolutions™ Canister Storage FSAR.
    - *Visual Inspection of Air Inlet and Outlets:* Perform periodic visual inspection of cask inlet and outlet vent screens in accordance with the *technical specification* requirements contained in Section 12.3 of this FSAR. This inspection may be performed remotely using video cameras or viewing aides.

8.1.11 Transfer Canister from Transfer Cask to Storage Cask (Vertical)

The following outline describes the major procedural steps for transferring a loaded FuelSolutions™ canister from a FuelSolutions™ W100 Transfer Cask to a FuelSolutions™ W150 Storage Cask in the plant's cask receiving bay using vertical canister transfer. The transfer cask/canister is moved from the cask decontamination area and docked vertically with the storage cask. The canister is lowered into the storage cask using the canister lift fixture. The storage cask with the canister is then transported from the cask receiving bay to the ISFSI, where it is moved to its storage position on the ISFSI pad.

8.1.11.1 Prepare Transfer Cask and Canister

NOTE: Prior to performing the following operations, canister loading and closure is to be completed as described in Section 8.1.1 through 8.1.9. In addition, the empty storage cask is to be prepared as described in Section 8.3.2 and moved into position in the plant's cask receiving bay.

1. If not already performed, install the transfer cask top cover, engage the lifting yoke on the transfer cask trunnions, and move the transfer cask to the cask decontamination area, disengage the lifting yoke, and remove the transfer cask top cover.

   NOTE: For vertical canister transfer, a cask support pad is to be prestaged in the decontamination area. The cask support pad holds the transfer cask high enough to allow removal and installation of the bottom cover bolts on the cask bottom end.

2. Install the canister lift adapter onto the canister outer closure plate. Tighten the bolts to an AISC "snug tight" condition. Install the lift restraints onto the transfer cask top flange to prevent raising the top of canister out of the transfer cask cavity.
3. Install the canister vertical lift fixture on the cask lifting yoke.

   NOTE: Rigging and handling operations must comply with the plant's NUREG-0612/ANSI N14.6 commitments.

4. Engage the lifting yoke on the transfer cask trunnions. Connect the canister vertical lift fixture to the canister lift adapter by installing the connecting pins.

   NOTE: The neutron shield overflow/pressurization bottle may be disconnected from the neutron shield while the transfer cask is being moved to the storage cask.

5. Remove the transfer cask bottom cover bolts.

8.1.11.2 Move Transfer Cask to the Storage Cask

1. Check to be sure the lifting yoke is properly engaged with the transfer cask trunnions.
2. Using the canister lift fixture, raise the canister a small amount to assure proper engagement.

   CAUTION: Due to occupational safety considerations and ALARA requirements, personnel shall stand clear of the loaded transfer cask during vertical transfer operations, especially with the bottom cover removed.

3. Move the transfer cask from the decontamination area to the plant's cask receiving bay.

   CAUTION: Horizontal movement of the cask should always be in a direction perpendicular to the plane of the trunnions. In this way, any inadvertent impact with an object will cause the cask to remain engaged with the lifting yoke and to rotate on the trunnions.

   WARNING: Until the transfer cask is seated on the storage cask docking collar, the loaded canister inside the transfer cask cannot be lowered from the transfer cask causing radiation exposure of cask operating and plant personnel. To prevent this inadvertent operation, the controls on the canister vertical lift fixture shall be locked out.

4. Position the transfer cask above the empty storage cask in the cask receiving bay.
5. Visually verify the alignment of the transfer cask with the docking collar installed on the storage cask (match the alignment marks on the docking collar, transfer cask, and storage cask). Lower the transfer cask into the docking collar.

   NOTE: Care should be taken to protect the sealing surfaces of the transfer cask bottom cover and flange.
6. When needed at a plant as a positive means for assuring lateral stability, the lifting yoke may remain engaged with the transfer cask trunnions maintaining a slight tension applied by the fuel building crane. When positive lateral stability is not needed, the alternative canister vertical lift fixture described in Section 1.2.1.4.3 may be used and the cask restraints installed between the docking collar and the transfer cask lower trunnions. For the latter alternative, the lifting yoke is disengaged from the transfer cask.

   NOTE: If previously disconnected, reconnect the neutron shield overflow/pressurization bottle to the transfer cask neutron shield vent fitting.

8.1.11.3 Insert Canister into Storage Cask

1. Lower the canister into the storage cask with the canister vertical lift fixture.
2. Perform a general radiation survey of the storage cask to assure that dose rates are within expected values. The dose rates measured near the midpoint of the storage cask side should be in accordance with the *technical specification* requirements contained in Section 12.3 of this FSAR. Dose rates near the storage cask vents or top and bottom ends need not meet this criteria.
3. Remotely remove the connecting pins from the canister lift fixture attachment to the canister lift adapter.
4. Retract the canister lift fixture within the transfer cask cavity.
5. Lift the empty transfer cask from the storage cask docking collar and move it to the cask decontamination area.

   NOTE: Prior to reinstalling the transfer cask bottom cover, check the bottom flange seal surface and bottom cover seals for any condition that might affect water leak tightness of this joint.
6. Set the transfer cask down on its bottom cover, verifying alignment with the bottom cover guide pins. Engage the bolts on the transfer cask bottom cover and tighten to an AISC "snug tight" condition using a star pattern.

   CAUTION: Horizontal movement of the cask should always be in a direction perpendicular to the plane of the trunnions. In this way, any inadvertent impact with an object will cause the cask to remain engaged with the lifting yoke and to rotate on the trunnions.
7. Remove the canister lift adapter from the canister outer closure plate.

8. Remove the docking collar from the storage cask. Install the storage cask cover and tighten the bolts to the original assembly requirements using a star pattern. Install the storage cask tamper-indicating device.
9. Install the storage cask nameplate, if not already installed.
10. Remove the temporary outlet vent shielding, if installed, and reinstall the outlet vent screens.

8.1.11.4 Tow Storage Cask to ISFSI

1. Move the storage cask out of the plant's cask receiving bay using air pallets or other suitable means of transport such as a vertical transport trailer or a vertical transporter as described in Section 1.2.1.4.3.
2. Using a suitable tow vehicle, transport the storage cask with the loaded canister from the site's cask receiving bay to the ISFSI along the designated transfer route at a speed of no greater than 5 mph. An alternate means of transport (e.g., a storage cask vertical transport trailer or a vertical transporter as described in Section 1.2.1.4.3) may be used in lieu of air pallets, provided the storage cask handling height remains in accordance with the *technical specification* requirements contained in Section 12.3 of this FSAR.

   CAUTION: The designated route is not to pass over bridges or roadways that require the transfer vehicle to get closer than approximately one storage cask length from a steep drop-off that exceeds the maximum permissible handling height of the storage cask, unless suitable barriers have been installed.

   NOTE: A 10CFR72.212 safety evaluation is required to address site-specific conditions along the designated transfer route.
3. Move the storage cask to its storage position on the ISFSI pad making measurements to assure that the spacing distances specified in the *technical specification* contained in Section 12.3 of this FSAR are met.

   NOTE: If the storage cask has been transported by a heavy haul trailer, it will be necessary to use air pallets to move the storage cask from the trailer to the ISFSI pad.
4. If applicable, remove the air pallets.
5. Install the inlet vent screens.
6. Perform a radiation dose survey for the loaded storage cask. Measure and record the doses near the midpoint of the cask side at several locations around the circumference, the screen surfaces of the inlet and outlet vents, and at several locations on the top lid. These dose rates should be in accordance with the *technical specification* requirement contained in Section 12.3 of this FSAR.
7. Install and activate the storage cask temperature monitoring system. Check that the temperatures are in accordance with the *technical specification* requirements contained in Section 12.3 of the respective FuelSolutions™ Canister Storage FSAR.
8. Install the storage cask lightning protection system, if required.
9. Close and lock the ISFSI access gate. Activate the security measures and begin periodic surveillances.

10. Throughout the storage period, conduct periodic surveillances of the storage cask using either of the following methods:
    - *Storage Cask Periodic Temperature Monitoring:* Perform periodic monitoring of storage cask concrete temperature using the thermocouple installed in the storage cask concrete in accordance with the *technical specification* contained in Section 12.3 of the respective FuelSolutions™ Canister Storage FSAR.
    - *Visual Inspection of Air Inlet and Outlets:* Perform periodic visual inspection of cask inlet and outlet vent screens in accordance with the *technical specification* contained in Section 12.3 of this FSAR. This inspection may be performed remotely using video cameras or visual aides.

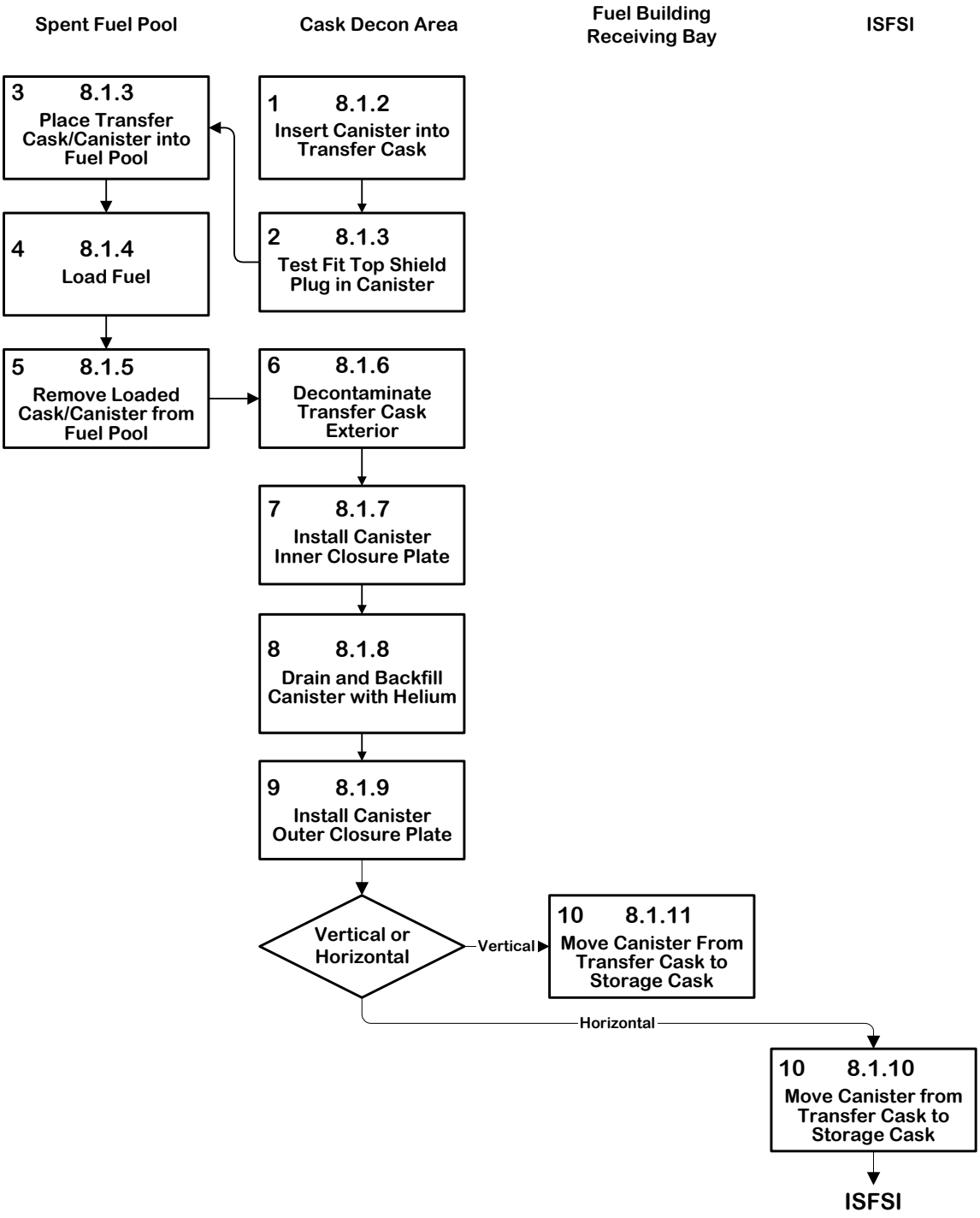

Figure 8.1-1 - Sequence for Loading a Canister

8.2 Procedures for Unloading the Storage Cask

The following procedures apply whenever it becomes necessary to retrieve a FuelSolutions™ canister from storage at an ISFSI, transport a canister off-site, or to unload the SNF from the canister, if necessary. Section 8.2.1 covers horizontal retrieval and transport of a FuelSolutions™ canister for a FuelSolutions™ W150 Storage Cask using a FuelSolutions™ W100 Transfer Cask and placement of the canister in the plant's cask decontamination area. Similarly, Section 8.2.2 covers vertical retrieval and transport of a canister from a storage cask using a transfer cask and placement in the cask decontamination area. Section 8.2.3 covers canister opening, reflooding, and placement of the canister in the spent fuel pool, followed by unloading of the SNF from the canister.

Section 8.2.4 covers horizontal canister transfer directly from a storage cask into a transportation cask. Section 8.2.5 covers horizontal canister transfer from a transfer cask to a transportation cask. Section 8.2.6 discusses vertical canister transfer from a transfer cask to a transportation cask.

Alternate means of fuel unloading, such as unloading a transfer cask outside the spent fuel pool using a fuel assembly shuttle cask and shielded loading collar, are specific to certain FuelSolutions™ canisters (e.g., the FuelSolutions™ W74 canister). These fuel loading processes are discussed in the corresponding FuelSolutions™ Canister Storage FSAR (i.e., Section 8.4 of the FuelSolutions™ W74 Canister Storage FSAR), when applicable.

8.2.1 Canister Retrieval Using Horizontal Canister Transfer

The storage cask with a loaded canister is rotated to a horizontal orientation on the ISFSI pad, and aligned and docked with a transfer cask on a transfer trailer. The canister is transferred to the transfer cask using the hydraulic ram. A flowchart of the sequence for retrieval of a loaded canister into a transfer cask using horizontal canister transfer is provided in Figure 8.2-1.

8.2.1.1 Prepare Loaded Storage Cask

1. Verify that the storage cask tie rods are tensioned to the original assembly requirements.
2. Remove the storage cask tamper-indicating device. Disconnect the storage cask lightning protection system, if applicable.

   NOTE: Prior to performing the following operations, the upender/downender shall be positioned relative to the storage cask impact limiters prior to any upending/downending of a loaded canister.

3. Move the loaded storage cask to the area designated to perform horizontal canister transfer operations using air pallets, a vertical transport trailer, or vertical cask transporter as needed. Position the storage cask in the upender/downender. Secure the storage cask to the upender/downender.

   NOTE: Horizontal canister transfer operations may be performed anywhere within the ISFSI or the site's owner-controlled area which can accommodate the storage cask impact limiter, based on a 10CFR72.212 safety evaluation.

4. Activate the upender/downender to rotate the storage cask to the horizontal orientation. Level storage cask to within ± 5º of horizontal.

   NOTE: During rotation, the upender/downender is designed to maintain the height of the storage cask within the maximum handling height specified in the technical specification contained in Section 12.3 of this FSAR.

   CAUTION: Movement of the loaded transfer cask outside the fuel building should not be initiated during weather conditions that could create lightning or flooding conditions at the ISFSI or on the transfer route.

5. Monitor the temperature of the storage cask using the installed thermocouples, in accordance with the *technical specification* requirements contained in Section 12.3 of the respective FuelSolutions™ Canister Storage FSAR. If the cask temperature reaches the maximum permissible temperature, immediately transfer the loaded canister to the transfer cask or reinstall the storage cask cover (if removed) and upend the loaded storage cask.

6. If required, remove the screens for the two storage cask outlet vents that are oriented horizontally and install temporary shielding in or over these vent openings. Do not cover or block the two storage cask outlet vents that are oriented vertically.

7. Position the hydraulic ram on the bottom of the storage cask in approximate horizontal and vertical alignment with the canister.

   NOTE: For this configuration, the canister is pushed from the storage cask to the transfer cask. If it becomes necessary to reverse this process, move the hydraulic ram to the bottom end of the transfer cask and push the canister back into the storage cask. Alternatively, a pintle can be installed on the bottom end of the canister and the grapple assembly installed on the hydraulic ram. The canister can then be both pushed and pulled with the hydraulic ram positioned on the bottom of the storage cask.

8. Install the horizontal lid handling fixture on the storage cask cover.

8.2.1.2 Align and Dock Transfer Cask with Storage Cask

NOTE: Prior to performing the following operations, the transfer cask is to be prepared as described in Section 8.3.1.

CAUTION: The transfer cask neutron shield must be verified to be full of liquid with the expansion bottle in place.

1. Install the transfer cask top cover and tighten its bolts to an AISC "snug tight" condition using a star pattern.

   NOTE: If not already installed, connect the neutron shield overflow/pressurization bottle to the neutron shield vent fitting.

2. Tow the horizontal transfer trailer and the empty transfer cask to the storage cask at the ISFSI or the area designated to perform horizontal canister transfer operations.

   NOTE: Horizontal canister transfer operations may be performed anywhere within the ISFSI or the site's owner-controlled area which can accommodate the storage cask impact limiter, based on a 10CFR72.212 safety evaluation.

3. Position the horizontal transfer trailer to within a few feet of the top end of the storage cask.
4. Check the position of the trailer to assure the centerline of the storage cask and transfer cask are within the range of adjustability of the transfer skid. If the trailer is not properly oriented, reposition the trailer as necessary.
5. Using a portable crane and a sling, engage the transfer cask bottom cover lifting eye. Unbolt the transfer cask bottom cover and remove it. The cask cavity spacer will also be removed with the bottom cover if installed.

   NOTE: The horizontal lid handling fixture may be needed for this operation if the cask cavity spacer is installed. Care should be taken to protect the sealing surfaces of the transfer cask bottom cover and flange.

6. Using a portable crane, install (if not already installed) and engage the horizontal lid handling fixture on the storage cask cover. Remove the storage cask cover bolts and remove the cover.
7. Install the storage cask shielded docking collar.
8. Slowly back up the trailer to position the transfer trailer to within a few inches of the storage cask and engage the trailer brakes. Disengage the tow vehicle and drive it clear of the trailer.
9. Remove the skid tie-downs and position the transfer cask horizontally so that the bottom end is within a few inches of the top end of the storage cask using the skid positioning system. Raise/lower the transfer cask to approximately the same height as the storage cask, using the trailer hydraulic jacks for vertical positioning. Using the skid positioning system, optical survey equipment, and the alignment marks on the transfer cask and the storage cask, adjust the position of the transfer cask until it is aligned horizontally and vertically with the storage cask to within $\pm$ 1/8 inch.
10. Fully insert the transfer cask into the docking collar on the storage cask access opening using the skid positioning system.
11. Secure the transfer cask lower trunnions to the storage cask via the docking collar using the cask restraints.

    WARNING: The transfer cask lower trunnions shall be secured to the storage cask to avoid separation of the casks during canister transfer and potentially high radiation exposure of cask operating and plant personnel.

12. After the transfer cask restraints are installed, use the optical survey equipment to verify that the alignment of the transfer cask is in within the Step 9 requirement.

8.2.1.3 Transfer Canister to Transfer Cask

1. Activate the hydraulic ram and push the canister into the transfer cask, until it is fully inserted. The canister is fully inserted when a measuring device on the hydraulic ram confirms that the prescribed distance has been traveled after the canister is inserted into the transfer cask.

   NOTE: Canister transfers between casks should be continuously monitored by health physicists/radiation control technicians to assure that unexpected radiation fields are not

experienced. The health physicist/radiation control technicians should monitor and control operator stay times and perform air monitoring, as required in plant-specific operating procedures. Temporary shielding may be used to lower personnel radiation exposures. Shielding should be installed in accordance with plant-specific procedures.

2. Retract the ram.
3. Check the radiation levels near the mid-plane (mid-point) of the transfer cask to assure that dose rates are below maximum expected values, in accordance with site-specific procedures and ALARA requirements (discussed in Section 10.1.3.2 of this FSAR). If the radiation levels exceed these requirements, notify the cognizant management representative. Await further instructions before proceeding. If radiation levels are acceptable, proceed.

NOTE: Temporary shielding may be used to lower personnel radiation exposures. The shielding should be installed in accordance with plant-specific procedures.

8.2.1.4 Prepare Transfer Cask for On-Site Transport

1. Remove the cask restraints from the transfer cask.
2. Using the skid positioning system, disengage the transfer cask from the docking collar on the storage cask.
3. Using the skid positioning system, position the skid on the trailer to install the tie-downs. Secure the skid to the transfer trailer and retract the vertical jacks.
4. Re-engage the tow vehicle with the transfer trailer and disengage the trailer brakes. Tow the transfer trailer a few feet away from the storage cask.
5. Check the transfer cask bottom flange seal surface and bottom cover seals for any condition that might affect the water leak tightness of this joint.
6. Install the transfer cask bottom cover with a sling and a portable crane. Tighten the bolts to an AISC “snug tight” condition. The cask cavity spacer will also be installed with the bottom cover, if used.

NOTE: The horizontal lid handling fixture may need to be used for this operation, if the cask cavity spacer is installed.

7. Monitor the temperature of the transfer cask using the installed thermocouple in accordance with the *technical specification* requirements contained in Section 12.3 of the respective FuelSolutions™ Canister Storage FSAR If the cask temperature reaches the minimum permissible temperature, move the loaded cask to a heated building to prevent freezing of the liquid neutron shield contents.
8. Remove the docking collar from the storage cask using a sling and a portable crane.
9. Replace the storage cask cover using the horizontal lid handling fixture and a portable crane. Bolt the cover in place to the original assembly requirements.
10. Disengage the hydraulic ram from the storage cask and move clear of the storage cask.
11. Remove temporary outlet vent shielding and reinstall the vent screens, if removed.

12. Activate the upender/downender and upend the storage cask to the vertical orientation. Remove the empty storage cask from the upender/downender.
13. Move storage cask to designated staging area.
14. Close gates and resume surveillances of remaining loaded casks.

8.2.1.5 Move Transfer Cask and Canister to Cask Decontamination Area

1. Using a suitable tow vehicle and ballast, move the transfer trailer and the loaded transfer cask from the ISFSI or the designated area for horizontal canister transfer to the plant's cask receiving bay along a designated transfer route at a speed of no greater than 5 mph.

   CAUTION: The designated route is not to pass over bridges or roadways that require the transfer trailer to get closer than approximately one trailer width from a steep drop-off that exceeds the maximum permissible handling height of the transfer cask, unless suitable barriers have been installed.

   NOTE: The horizontal transfer trailer and skid are designed to maintain the height of the transfer cask within the maximum handling height specified in the technical specification contained in Section 12.3 of this FSAR.

   NOTE: A 10CFR72.212 safety evaluation is required to address site-specific conditions along the designated transfer route.

2. Position the transfer trailer so that the transfer cask is accessible to the fuel building crane. Support the trailer on its vertical jacks.
3. Connect the transfer cask lifting yoke to the hook of the fuel building crane.
4. Remove the top halves of the transfer skid trunnion pillow blocks and engage the lifting yoke with the upper trunnions of the transfer cask. Lift the cask just far enough to allow the weight of the cask to be distributed onto the yoke lifting arms. Re-inspect the lifting arms to assure that they are properly positioned on the cask trunnions.
5. Raise the transfer cask from the transfer skid, while simultaneously moving the crane toward the lower trunnions, until the cask is rotated to a vertical orientation. Then lift the transfer cask from the transfer skid.
6. Move the transfer cask with the loaded canister to the cask decontamination area.

   CAUTION: Horizontal movement of the cask should always be in a direction perpendicular to the plane of the trunnions. In this way, any inadvertent impact with an object will cause the cask to remain engaged with the lifting yoke and to rotate on the trunnions.

8.2.2 Canister Retrieval Using Vertical Canister Transfer

A storage cask with a loaded canister is transported from the ISFSI to the plant's cask receiving bay. The canister is transferred to a transfer cask using the canister vertical lift fixture and placed in the cask decontamination area. A flowchart of the sequence for retrieval of a loaded canister into a transfer cask using vertical canister transfer is provided in Figure 8.2-2.

8.2.2.1 Transport Storage Cask to Cask Receiving Bay

1. Remove the inlet vent screens from the storage cask to be moved and install the air pallets unless a vertical transporter is to be used.
2. Using a suitable tow vehicle, move the storage cask with the loaded canister from the ISFSI to the plant's cask receiving bay along a designated transfer route at a speed of no greater than 5 mph. An alternate means of transport (e.g., a storage cask vertical transport trailer or a vertical transporter as described in Section 1.2.1.4.3.) may be used in lieu of air pallets, provided the storage cask handling height remains in accordance with the *technical specification* requirements contained in Section 12.3 of this FSAR.

   CAUTION: The designated route is not to pass over bridges or roadways that require the transfer vehicle to get closer than approximately one storage cask length from a steep drop-off that exceeds the maximum permissible handling height of the storage cask, unless suitable barriers have been installed.

   NOTE: A 10CFR72.212 safety evaluation is required to address site-specific conditions along the designated transfer route.

3. Close and lock the ISFSI access gate and reactivate the periodic surveillance and security measures for the remaining loaded storage casks.

   NOTE: Canister and cask operations shall be continuously monitored by health physics/radiation control technicians to assure that unexpected radiation fields are not experienced. The health physics/radiation control technician shall monitor and control operator stay time and perform constant air monitoring, as required by plant-specific operating procedures. Install temporary shielding to reduce personnel radiation exposures in accordance with plant-specific procedures.

8.2.2.2 Prepare Transfer Cask

NOTE: Prior to performing the following operations, the transfer cask is to be prepared as described in Section 8.3.1.

1. Move the empty transfer cask to the cask decontamination area using the fuel building crane and the cask lifting yoke. Place the transfer cask on the cask support pad in the decontamination area to facilitate bottom cover removal.

   CAUTION: Horizontal movement of the cask should always be in a direction perpendicular to the plane of the trunnions. In this way, an inadvertent impact with an object will cause the cask to remain engaged with the lifting yoke and rotate on the trunnions.

2. Disengage the lifting yoke.
3. Remove the transfer cask top cover using a sling and the fuel building crane. Install the lift restraints onto the transfer cask bolt flange to prevent raising the top of canister out of the transfer cask cavity.
4. Install the canister lift fixture on the lifting yoke.

NOTE: Rigging and handling operations must comply with the plant's NUREG-0612/ANSI N14.6 commitments.

5. Verify that the neutron shield cavity is full.
6. Verify that the neutron shield cavity expansion bottle is in place.

NOTE: The neutron shield expansion bottle should be in place whenever the transfer cask is loaded with fuel and the neutron shield cavity is full of water.

8.2.2.3 Prepare Storage Cask and Canister

1. Remove the storage cask cover using a sling and the fuel building crane.
2. Install the shielded docking collar onto the storage cask using a sling and the fuel building crane.
3. Install the canister lift adapter onto the canister outer closure plate using a sling and the fuel building crane. Tighten the bolts to an AISC "snug tight" condition.

NOTE: This step may be performed prior to Step 2.

NOTE: Rigging and handling operations must comply with the plant's NUREG-0612/ANSI N14.6 commitments.

8.2.2.4 Dock Transfer Cask with Storage Cask and Retrieve Canister

1. Re-connect the cask lifting yoke with the hook of the fuel building crane. Engage the lifting yoke with the transfer cask trunnions.
2. Remove the transfer cask bottom cover bolts.
3. Lift the cask just far enough to allow the weight of the cask to be distributed onto the yoke lifting arms. Re-inspect the lifting arms to assure that they are properly positioned on the cask trunnions. Continue lifting the transfer cask, leaving the bottom cover behind.
4. Move the transfer cask from the decontamination area to the plant's cask receiving bay.

CAUTION: Horizontal movement of the cask should always be in a direction perpendicular to the plane of the trunnions. In this way, an inadvertent impact with an object will cause the cask to remain engaged with the lifting yoke and rotate on the trunnions.

5. Position the transfer cask above the docking collar on the storage cask.
6. Run out the chain from the canister lift fixture down through the transfer cask cavity until the connector reaches the canister lift adapter.
7. Using long-handled tools, connect the canister vertical lift fixture to the canister lift adapter using the connecting pins.

CAUTION: Personnel should never reach into the area between storage cask and transfer cask to connect the lift fixture chain to the canister lift adapter.

8. Visually verify the alignment of the transfer cask with the docking collar on the storage cask (match the alignment marks on the docking collar, transfer cask, and storage cask). Lower the transfer cask onto the docking collar.

   NOTE: Care should be taken to protect the sealing surfaces of the transfer cask bottom cover and flange.

9. With the canister vertical lift fixture, take up the slack in the chain, verifying that the chain is tensioned. Lift the canister a small amount to assure proper engagement.

10. When needed at a site as a positive means for assuring lateral stability, the lifting yoke may remain engaged on the transfer cask trunnions maintaining a slight tension applied by the fuel building crane. When positive lateral stability is not needed, the alternative canister vertical lift fixture described in Section 1.2.1.4.3 may be used and the cask restraints installed between the docking collar and the transfer cask lower trunnions. For the latter alternative, the lifting yoke is disengaged from the transfer cask.

11. Raise the canister into the transfer cask using the canister lift fixture. Once this task is completed, lock out the lift fixture controls.

    NOTE: Canister transfers between casks should be continuously monitored by health physicists/radiation control technicians to assure that unexpected radiation fields are not experienced. The health physicist/radiation control technician should monitor and control operator stay time and perform constant air monitoring, as required in plant-specific operating procedures. Temporary shielding may be used to lower personnel radiation exposures. Shielding should be installed in accordance with plant-specific procedures.

8.2.2.5 Move Canister and Transfer Cask to Cask Decontamination Area

1. If necessary, remove the cask restraints from the transfer cask lower trunnions and docking collar.

2. Move the cask from the plant's cask receiving bay to the cask decontamination area.

   WARNING: To prevent inadvertent radiation exposure to cask operating and plant personnel, do not lower the loaded canister from the transfer cask. Lock out the control on the canister vertical lift fixture until the transfer cask is resting on its bottom cover.

3. Check the radiation levels near the mid-plane (mid-point) of the transfer cask to assure that dose rates are below maximum expected values, in accordance with plant-specific procedures and ALARA requirements (discussed in Section 10.1.3.2 of this FSAR). If the radiation levels exceed these requirements, notify the cognizant management representative. Await further instructions before proceeding. If radiation levels are acceptable, proceed.

   NOTE: Temporary shielding may be used to lower personnel radiation exposures. The shielding should be installed in accordance with plant-specific procedures.

4. Check the transfer cask bottom flange seal surface and bottom cover seals for any condition that might affect the water leak tightness of this joint.

5. Set the transfer cask down on the bottom cover, verifying alignment with the bottom cover guide pins. Engage and tighten the bolts on the transfer cask bottom cover to an AISC "snug tight" condition using a star pattern.
6. Run out additional chain to provide slack on the canister lift fixture.
7. Remotely remove the connecting pins from the canister lift fixture attachment to the canister lift adapter.
8. Disengage the lifting yoke from the transfer cask trunnions and move it away from the cask. Remove the canister lift fixture from the lifting yoke.
9. Remove the canister lift adapter from the canister outer closure plate. Remove the lift restraints.

   NOTE: Rigging and handling operations must comply with the plant's NUREG-0612/ANSI N14.6 commitments.

8.2.3 Canister Opening and Unloading of Fuel

The following outline describes the major procedural steps for opening a loaded FuelSolutions™ canister and transferring the SNF assemblies back to the spent fuel pool. While in the cask decontamination area, the canister is vented and filled with water. The inner and outer closure plates are removed and the cask/canister is placed in the spent fuel pool. The shield plug is removed from the canister and the fuel assemblies are moved to their designated storage location in the spent fuel pool. A flowchart of the sequence for unloading fuel is provided in Figure 8.2-3.

8.2.3.1 Prepare Canister for Vent and Fill

1. If not already removed, unbolt the transfer cask top cover and remove it using a sling and the fuel building crane.

   NOTE: Rigging and handling operations must comply with the plant's NUREG-0612/ANSI N14.6 commitments.

2. Remove the quick-disconnect fitting from the transfer cask upper annulus port.
3. Connect a fill hose to the transfer cask bottom annulus port and fill the annulus with clean demineralized water to just below the annulus seal location.
4. Connect a full flow area drain line to the transfer cask upper annulus port. Route the drain line to a suitable drain below the elevation of the annulus seal location.
5. Install the inflatable annulus seal in the cask/canister annulus.

   NOTE: If the canister shell temperature in the annulus seal region exceeds 250°F, annulus cooling should be initiated immediately following installation of the annulus seal.

6. Circulate cooling water through the annulus with an inlet temperature of 100°F or less and a flow rate of 5 gpm or more for a period of 4 hours or more to cool the canister. Alternatively, a closed loop auxiliary heat exchanger may be used to circulate cooling water through the annulus to cool the canister.

NOTE: Cooling water may bypass the annulus seal if the pressure in the annulus is greater than the seal inflation pressure.

8.2.3.2 Vent and Fill Canister with Water

NOTE: Temporary shielding may be placed over the cask/canister annulus in accordance with plant-specific procedures to lower personnel radiation exposures.

1. After a minimum of 4 hours of annulus cooling, locate the canister vent, drain, and instrument port marks on the outer closure plate while maintaining cask/canister annulus circulation. Machine cut through the outer closure plate along the marks scribed on the outer closure plate to expose the vent, drain, and instrument port covers using a portable milling machine.
2. Locate and cut through the canister vent port cover to expose the vent port. Sample for air-borne contamination and fission gas upon removal.
3. Connect a vent line to the canister vent port, which is routed to the plant's heating, ventilating, and air conditioning (HVAC) system or the spent fuel pool, to relieve any pressure in the canister. Leave the vent line connected so that the canister remains vented.

   NOTE: At the licensee's option, a gas sample may be collected from the vent line and a chemical analysis performed of the sample. An analysis of the sample will be helpful in detecting the presence of damaged fuel in the canister and the presence of hydrogen gas. (A plant-specific procedure should provide specifics on obtaining and analyzing this sample, if desired.)

4. Locate and cut through the canister drain port and instrument port covers. Sample for air-borne contamination and fission gas upon removal.
5. Connect a pressure gauge to the canister instrument port to measure the canister internal pressure.
6. Connect the vacuum drying system liquid pump with a valve on its discharge side to the canister drain port. Connect a line to the suction side of the liquid pump and route it to the spent fuel pool, or an equivalent source of water.
7. Disconnect the vent line from the canister vent port and remove the quick disconnect fitting. Install a full flow area fitting with a branch connection fitted with an integral thermocouple probe. The thermocouple probe is inserted through the canister vent port into the canister cavity to measure the canister gas temperature. Connect a full flow area vent line to the canister vent port which is routed to the spent fuel pool.
8. When the thermocouple on the canister vent port is reading 475°F or less, filling of the canister with water can be initiated. If the temperature exceeds this value, re-initiate cask/canister annulus cooling until the vent port thermocouple temperature is acceptable.
9. Use the vacuum drying system liquid pump and discharge side valve to slowly (10 gpm maximum/70°F to 120°F temperature) transfer water from the spent fuel pool through the drain tube, fill the canister from the bottom until water flows from the vent line.

10. Monitor the canister pressure with the gauge connected to the instrument port. If the canister pressure approaches 100 psig, slow or suspend the water transfer to the canister to maintain the pressure below this allowable pressure.
11. After reflood, discontinue annulus circulation, remove the annulus seal, and provide make-up water to approximately 12 inches below the top edge of the canister shell.
12. Install a suitable debris barrier and annulus shield to protect the cask and to prevent debris from entering the annulus during additional canister opening operations.

8.2.3.3 Remove the Canister Inner and Outer Closure Plates

1. Connect a liquid pump to the canister drain port. Remove approximately 15 gallons of water from the cavity to lower the water level below the bottom of the shield plug and return the water to the spent fuel pool. Alternatively, water can be removed using compressed argon gas.
2. Disconnect the liquid pump from the drain port.
3. On a plant/canister-specific basis, the canister vent port quick-connect fitting may be removed and a temperature measuring device with a quick-connect fitting installed to monitor the canister's water temperature while continuing to vent the canister. If the canister water temperature reaches 180°F, reinstall the cask/canister annulus seal and begin circulating cooling water through the cask/canister annulus to cool the canister and prevent boiling of the canister water (see Steps 2 - 6 of Section 8.2.3.1).

   NOTE: A specific canister's SNF decay heat, ambient operating and available annulus cooling water temperatures, available annulus cooling water flow rate, site-specific fuel pool temperature limits and occupational safety practices, and time needed to complete operations to a point where canister water boiling is no longer a concern will determine to what temperature a canister's water will be cooled.

   NOTE: Prevention of canister water boiling is recommended to assure worker safety, but is not for nuclear safety.

4. Install the AW/OS onto the outer closure plate.
5. Remove the outer closure plate weld using the AW/OS.
6. Lift the outer closure plate and AW/OS from the canister. The vent line and the instrument port pressure gauge may be temporarily disconnected to facilitate outer closure plate removal.
7. Install the AW/OS onto the inner closure plate.
8. Prior to the initiation of cutting, monitor the presence of hydrogen in the vent port using a calibrated device capable of measuring concentrations of hydrogen to 0.4 % by vol.
9. If hydrogen concentrations of 0.4 % by volume or more are detected:
   - Reconnect the canister drain port to the vacuum drying system liquid pump/discharge side valve configuration described in Section 8.2.3.2, Step 6.
   - Reconnect the vent port to a hose routed to the spent fuel pool.

- Reconnect the instrumentation port pressure gauge.
- Using the vacuum drying system liquid pump/discharge valve, refill the canister at a water flow rate that does not exceed 5 psig until water is discharged into the spent fuel pool.
- Repeat Section 8.2.3.3, Steps 1, 2, and 8 as needed to assure a vent port hydrogen concentration of less than 0.4 % by volume prior to the start of cutting.

10. Remove the inner closure plate weld using the AW/OS.
11. Remove the vent line and the instrument port pressure gauge.
12. Lift the AW/OS from the canister.
13. Remove the inner closure plate vent and drain port body welds.
14. Lift the inner closure plate from the canister.

    NOTE: Rigging and handling operations must comply with the plant's NUREG-0612/ANSI N14.6 commitments.

    WARNING: As the inner closure plate is lifted, assure that the top shield plug is not also lifted, causing potentially high radiation exposure to cask operating and plant personnel.

8.2.3.4 Place Transfer Cask and Canister into Fuel Pool

1. Disconnect the cask/canister annulus cooling water line, if connected. Install the quick-disconnect fitting in the transfer cask upper annulus port. Install the cask/canister annulus seal.
2. Attach the annulus pressurization bottle to the cask annulus vent port. This precludes pressurization in the cask/canister annulus that could dislodge the annular seal.
3. If required to meet the fuel building crane hook load limitations, drain the transfer cask liquid neutron shield. Connect an overflow/pressurization bottle to the liquid neutron shield fitting in order to maintain a positive head during pool immersion.
4. Install the temporary shield plug retainers.
5. Position the cask lifting yoke over the cask and connect the rigging to the canister top shield plug. Adjust the rigging cables, as necessary, to obtain even cable tension. Engage the trunnions with the lifting yoke.

   WARNING: Care should be taken not to lift the shield plug.

6. Visually inspect the yoke lifting arms to assure that they are properly positioned and engaged on the cask lifting trunnions.
7. Lift the cask just far enough to allow the weight of the cask to be distributed onto the yoke lifting arms. Re-inspect the lifting arms to assure that they are properly positioned on the cask trunnions.
8. Verify that the spent fuel pool water level is at or above the minimum required for fuel transfer operations, including compensation for the water volume displaced by the cask.

9. Lift the cask/canister and position it over the cask loading area of the spent fuel pool, in accordance with the plant's 10CFR50 cask handling procedures.

   CAUTION: Horizontal movement of the cask should always be in a direction perpendicular to the plane of the trunnions. In this way, an inadvertent impact with an object will cause the cask to remain engaged with the lifting yoke and rotate on the trunnions.

10. Lower the cask into the fuel pool until the bottom of the cask is at the height of the fuel pool surface. As the cask is lowered into the fuel pool, spray the exterior surface of the cask with clean demineralized water to wet the surface and ease decontamination when the cask is removed from the pool.

11. Stop when the top of the cask reaches the water surface. Rotate the temporary shield plug retainers out of position.

    NOTE: If the plant's spent fuel pool has a cask shelf or platform below the water level, then the cask can be set on this shelf or platform. At this time, the yoke can be disengaged and a yoke extension can be installed between the yoke and the crane hook to prevent immersion of the crane hook. The yoke should be rinsed with clean demineralized water as it is removed and the extended yoke should be similarly rinsed as it is immersed in the pool water. The extended yoke should then be re-engaged with the cask trunnions. Visual confirmation of proper trunnion engagement should be made.

12. Place the cask in the location of the fuel pool designated as the cask loading area.

13. Disengage the lifting yoke from the cask lifting trunnions. Move the yoke and top shield plug clear of the cask. Spray the lifting yoke and top shield plug with clean demineralized water, as they are raised out of the fuel pool.

8.2.3.5 Remove Fuel from Canister

NOTE: To minimize crud dispersion in the spent fuel pool, fuel handling operations should not begin until any loose particles inside the canister have had a chance to settle, should employ slow SNF assembly movements, and should consider using auxiliary pool filtration equipment and enhanced airborne detection and protection systems.

1. Remove the selected fuel assembly from the canister guide tube and move it into a visual inspection area, to record the fuel assembly identification number.

2. Read and record the fuel assembly identification number from the fuel assembly.

3. Perform visual inspection of the SNF assembly.

   NOTE: If fuel damage is observed, follow the appropriate actions in the plant's 10CFR50 procedures for handling of damaged fuel and report this finding to the NRC.

4. Move the fuel assembly to a designated fuel storage rack position, in accordance with the plant's 10CFR50 fuel handling procedures.

5. Repeat Steps 1 to 4 until all the fuel has been removed from the canister.

NOTE: For the FuelSolutions™ W74 canister, the upper basket assembly is removed from the canister at this point and SNF assemblies are removed from the lower basket assembly as discussed in Section 8.2.3 of the FuelSolutions™ W74 Canister Storage FSAR.

8.2.3.6 Remove Empty Canister from Fuel Pool

NOTE: For the FuelSolutions™ W74 canister, this section is preceded by the installation of the upper basket assembly into the empty canister as discussed in Section 8.2.3 of the FuelSolutions™ W74 Canister Storage FSAR.

1. After spraying the top shield plug, rigging cables, and yoke with clean demineralized water, position the lifting yoke and the top shield plug over the cask/canister and lower the shield plug into the canister.
2. Position the lifting yoke, engage the cask trunnions, and verify that the lifting yoke is properly engaged.
3. Lift the cask just far enough to allow the weight of the cask to be distributed onto the yoke lifting arms. Re-inspect the lifting arms to assure that they are properly positioned on the cask trunnions.
4. Raise the cask to near the pool surface, spraying the lifting yoke with clean demineralized water as it becomes exposed to air. Prior to raising the top of the cask above the water surface, stop vertical movement.

NOTE: In plants where yoke extensions have been added to preclude immersion of the crane hook and where underwater cask shelves or platforms exist, the cask should be placed on that shelf or platform. The yoke should be disengaged and removed from the cask and raised out of the pool water. The yoke should be rinsed with clean demineralized water as it is being removed. The yoke extension should be removed, the yoke should be re-immersed in the pool and re-engaged with the cask trunnions. Visual confirmation of proper trunnion engagement should be made.

5. With the cask near the pool surface, inspect the top shield plug to verify that it is properly seated in the canister. If not, lower the cask and reposition the top shield plug.
6. Continue to raise the cask from the pool and spray the exposed portion of the cask and lifting yoke with clean demineralized water, until the top region of the cask is accessible.
7. Check the radiation levels near the center of the top shield plug, in accordance with plant-specific procedures and ALARA requirements. If the radiation levels exceed those expected for an empty canister, return the cask to the cask loading area in the fuel pool and notify the cognizant management representative. Await further instructions before proceeding. If radiation levels are acceptable, proceed.
8. Remove sufficient water from the top of the cask/canister back into the pool, to expose the surface of the shield plug.
9. Lift the cask from the fuel pool. As the cask is raised from the pool, continue to spray the cask with clean demineralized water.
10. Move the transfer cask with the empty canister to the cask decontamination area.

CAUTION: Horizontal movement of the cask should always be in a direction perpendicular to the plane of the trunnions. In this way, an inadvertent impact with an object will cause the cask to remain engaged with the lifting yoke and rotate on the trunnions.

8.2.3.7 Ready Empty Canister

1. Disconnect the lifting yoke rigging cables from the top shield plug.
2. Disengage the lifting yoke from the trunnions and move it clear of the cask.
3. If required by site-specific seismic criteria, install the cask seismic restraint members.
4. Check the radiation levels near the mid-plane (mid-point) of the transfer cask to assure that dose rates are below maximum expected values for an empty canister. If the radiation levels exceed those expected, notify the cognizant management representative. Await further instructions before proceeding. If radiation levels are acceptable, proceed.
5. Remove the temporary shield plug retainers.
6. Remove the annulus seal and drain the cask/canister annulus.
7. Decontaminate the cask exterior surface.
8. Decontaminate the exposed surfaces of the canister shell perimeter adjacent to the shield plug and the top interior surface of the cask and the top exterior surface of the canister above and adjacent to the annulus seal location.
9. Connect a liquid pump to the canister drain port. Drain the canister water back to the spent fuel pool. Disconnect the liquid pump.
10. Weld the top shield plug to the canister shell and suitable lifting lugs to the shield plug.
11. Remove the canister from the transfer cask using a sling and the fuel building crane and disposition in accordance with site-specific procedures.

    NOTE: Rigging and handling operations must comply with the plant's NUREG-0612/ANSI N14.6 commitments.

12. Place the canister and inner and outer top covers in an area where decontamination can be performed if desired.

8.2.4 Horizontal Canister Transfer from a Storage Cask to a Transportation Cask

The following outline describes the major procedural steps for horizontally transferring a loaded FuelSolutions™ canister from a FuelSolutions™ W150 Storage Cask to a transportation cask. The storage cask with a loaded canister is rotated to its horizontal orientation on the ISFSI pad, and aligned and docked with a transportation cask on a transfer trailer. The canister is transferred to the transportation cask using the hydraulic ram. The transportation cask is then moved to a designated staging area for preparations for off-site transport. A flowchart of the sequence for transferring a canister from a storage cask to a transportation cask is provided in Figure 8.2-4.

NOTE: Direct retrieval of a loaded canister from a storage cask into a transportation cask for off-site transport results in the top end of the canister at the bottom end of the transportation cask. In this case, the transportation cask should not be upended and handled vertically. Returning the canister to the storage cask, for any reason, would be accomplished by pulling the canister into the storage cask with the hydraulic ram and the pintle assembly. As an alternative, the loaded canister can be retrieved to a transfer cask, as described in Sections 8.2.1 or 8.2.2, and then transferred to the transportation cask, as described in Section 8.2.5.

8.2.4.1 Prepare Loaded Storage Cask

1. Verify that the storage cask tie-rods are tensioned to the original assembly requirements.
2. Remove the storage cask tamper-indicating device. Disconnect the storage cask lightning protection system, if applicable.

   NOTE: Prior to performing the following operations, position upender/downender over the storage cask impact limiters prior to any upending/downending of a loaded canister.

3. Move the loaded storage cask to the area designated to perform horizontal canister transfer operations using air pallets, a vertical transport trailer, or vertical cask transporter as needed. Position the storage cask in the upender/downender. Secure the storage cask to the upender/downender.

   NOTE: Horizontal canister transfer operations may be performed anywhere within the ISFSI or the site's owner-controlled area which can accommodate the storage cask impact limiter, based on a 10CFR72.212 safety evaluation.

4. Activate the upender/downender to rotate the storage cask to the horizontal position. Level storage cask to within ± 5° of horizontal.

   NOTE: During rotation, the upender/downender is designed to maintain the height of the storage cask within the maximum handling height specified in the technical specification contained in Section 12.3 of this FSAR.

5. Monitor the temperature of the storage cask using the installed thermocouple in accordance with the *technical specification* requirements contained in Section 12.3 of the respective FuelSolutions™ Canister Storage FSAR. If the cask temperature reaches the maximum permissible temperature, immediately transfer the loaded canister into the transportation cask per Section 8.2.4.2 or upend the loaded storage cask.
6. If required, remove the screens for the two storage cask outlet vents that are oriented horizontally and install temporary shielding in or over these outlet vent openings. Do not cover or block the two storage cask outlet vents that are oriented vertically.
7. Install the pintle assembly on the canister.
8. Install the grapple assembly on the hydraulic ram and position the hydraulic ram on the bottom of the storage cask in approximate horizontal and vertical alignment with the canister.

   NOTE: For this configuration, the canister is pushed from the storage cask to the transportation cask. If it becomes necessary to reverse this process, the canister can then be

both pushed and pulled (using the pintle and grapple assemblies) with the hydraulic ram positioned at the bottom of the storage cask.

9. Install the horizontal lid handling fixture on the storage cask cover.
10. Align and dock transportation cask with storage cask

    NOTE: Prior to performing the following operations, prepare the transportation cask as described in the transportation license application. The preparation of the transportation cask is similar to the transfer cask preparation process presented in Section 8.3.1.

11. If required, install a cask cavity spacer in the transportation cask. Secure the empty transportation cask on the horizontal transfer skid and trailer.

    NOTE: A cask spacer is only required if a short FuelSolutions™ canister is to be transported.

12. Tow the horizontal transfer trailer and the empty transportation cask to the storage cask at the ISFSI or the area designated to perform horizontal canister transfer operations.

    NOTE: Horizontal canister transfer operations may be performed anywhere within the ISFSI or the site's owner-controlled area which can accommodate the storage cask impact limiter, based on a 10CFR72.212 safety evaluation.

13. Position the horizontal transfer trailer to within a few feet of the top end of the storage cask.
14. Check the position of the trailer to assure the centerline of the storage cask and transportation cask are within the range of adjustability of the transfer skid. If the trailer is not properly oriented, reposition the trailer as necessary.
15. Using a portable crane and the horizontal lid handling fixture, engage the transportation cask top cover. Unbolt the transportation cask top cover and remove it.

    NOTE: Care should be taken to protect the sealing surfaces of the transportation cask top cover and flange.

16. Using a portable crane, install and engage the horizontal lid handling fixture on the storage cask cover. Remove the storage cask cover bolts and remove the cover.
17. Install the storage cask shielded docking collar.
18. Slowly back up the trailer to position the transfer trailer to within a few inches of the storage cask and engage the trailer brakes. Disengage the tow vehicle and drive it clear of the trailer.
19. Remove the skid tie-downs and position the transportation cask horizontally using the skid positioning system, so that the top end is within a few inches of the top end of the storage cask. Raise/lower the transportation cask to approximately the same height as the storage cask, using the trailer hydraulic jacks for vertical positioning. Using the skid positioning system, optical survey equipment, and the alignment marks on the transportation cask and the storage cask, adjust the position of the transportation cask until it is aligned horizontally and vertically with the storage cask to within ± 1/8 inch.
20. Fully insert the transportation cask into the docking collar on the storage cask access opening using the skid positioning system.

21. Secure the transportation cask upper trunnions to the storage cask via the docking collar using the cask restraints.

WARNING: The transportation cask upper trunnions shall be secured to the storage cask to avoid separation of the casks during canister transfer and result in potentially high radiation exposure to cask operating and plant personnel.

22. After the transportation cask restraints are installed, use the optical survey equipment to verify that the alignment of the transportation cask is in accordance with the Step 9 requirement.

8.2.4.2 Transfer Canister to Transportation Cask

1. Engage the grapple on the hydraulic ram with the pintle on the canister.
2. Activate the hydraulic ram and push the canister into the transportation cask until it is fully inserted. The canister is fully inserted when a measuring device on the hydraulic ram confirms that the prescribed distance has been traveled after the canister is inserted into the transportation cask.
3. Disengage the grapple from the pintle and retract the ram.
4. Check the radiation levels near the mid-plane (mid-point) of the transportation cask to assure that dose rates are below maximum expected values, in accordance with site-specific procedures and ALARA requirements (discussed in the transportation license application). If the radiation levels exceed these requirements, notify the cognizant management representative. Await further instructions before proceeding. If radiation levels are acceptable, proceed.

NOTE: Temporary shielding may be used to lower personnel radiation exposures. The shielding should be installed in accordance with site-specific procedures.

8.2.4.3 Ready Transportation Cask for Off-Site Transport

1. Remove the cask restraints from the transportation cask.
2. Using the skid positioning system, disengage the transportation cask from the docking collar on the storage cask.
3. Using the skid positioning system, position the skid on the trailer to install the tie-downs. Secure the skid to the transfer trailer and retract the vertical jacks.
4. Re-engage the tow vehicle with the transfer trailer and disengage the trailer brakes. Tow the transfer trailer a few feet away from the storage cask. Remove the pintle from the canister.
5. Install the transportation cask cover using the horizontal lid handling fixture and a portable crane. Tighten bolts to an AISC “snug tight” condition using a star pattern. Install the tamper-indicating device.
6. Remove the docking collar from the storage cask.
7. Replace the storage cask cover using the horizontal lid handling fixture and a portable crane and bolt it in place to the original assembly requirements.
8. Disengage the hydraulic ram from the storage cask and move it clear of the storage cask.

9. Remove temporary outlet vent shielding, reinstall the vent screens if removed, and upend the storage cask to the vertical orientation.
10. Tow the transfer trailer and transportation cask to the designated staging area for preparations for off-site transport.

    NOTE: The subsequent procedures for preparation of the transportation cask for off-site transport are provided in a separate transportation license application.

8.2.5 Horizontal Canister Transfer from a Transfer Cask to a Transportation Cask

The following outline describes the major procedural steps for transferring a FuelSolutions™ canister from a FuelSolutions™ W100 Transfer Cask to a transportation cask.

The transfer cask is aligned and docked with a transportation cask. Using a hydraulic ram, the canister is transferred to a transportation cask, which is then moved to a designated staging area for preparations for off-site transport. A flowchart of the sequence for transferring a canister from a transfer cask to a transportation cask using horizontal canister transfer is provided in Figure 8.2-5.

NOTE: Prior to performing the following operations, load a canister into a transfer cask, as described in Sections 8.1 (directly from fuel pool), 8.2.1 (horizontally from storage cask), or 8.2.2 (vertically from storage cask).

8.2.5.1 Stage Transportation Cask

NOTE: Prior to performing the following operations, prepare the transportation cask as described in the transportation license application. The preparation of the transportation cask is similar to the transfer cask preparation process presented in Section 8.3.1.

1. Move an empty transportation cask (still secured to the intermodal railcar skid) to the area designated to perform horizontal canister transfer operations. Typically, the transportation cask will be transported with a heavy-haul trailer and an auxiliary crane will be used to move the cask and skid to the transfer area. Position the transportation cask and skid onto a special platform constructed to support the cask and skid. This platform will be constructed at the appropriate height for the horizontal transfer of the canister.

   NOTE: Horizontal canister transfer operations may be performed anywhere within the ISFSI or the site's owner-controlled area, based on 10CFR72.212 safety evaluation.

2. Using a portable crane and the horizontal lid handling fixture, engage the transportation cask top cover. Unbolt the transportation cask top cover and remove it.
3. Install the transportation cask docking collar.

   NOTE: Care should be taken to protect the sealing surfaces of the transportation cask top cover and flange.

8.2.5.2 Align and Dock Transfer Cask with Transportation Cask

1. Once at the canister transfer area, position the horizontal transfer trailer to within a few feet of the transportation cask.
2. Check the position of the trailer to assure the centerline of the transportation cask and transfer cask are within the range of adjustability of the transfer skid. Reposition the trailer as necessary.
3. Install the horizontal lid handling fixture on the transfer cask bottom cover, unbolt the transfer cask bottom cover, and remove it using a portable crane. Monitor for radiation streaming.

   NOTE: Care should be taken to protect the sealing surfaces of the transfer cask bottom cover and flange.

4. Slowly back up the trailer to position the transfer trailer to within a few inches of the transportation cask and engage the trailer brakes. Disengage the tow vehicle and drive it clear of the trailer.
5. Remove the skid tie-downs and position the transfer cask horizontally so that the bottom end is within a few inches of the top end of the transportation cask using the skid positioning system. Raise/lower the transfer cask to approximately the same height as the transportation cask, using the trailer hydraulic jacks for vertical positioning. Using the skid positioning system, optical survey equipment, and the alignment marks on the transfer cask and the transportation cask, adjust the position of the transfer cask until it is aligned horizontally and vertically with the transportation cask to within ± 1/8 inch.
6. Fully insert the transfer cask into the docking collar on the transportation cask using the skid positioning system.
7. Secure the transfer cask lower trunnions to the transportation cask upper trunnions using the cask restraints.

   WARNING: The transfer cask lower trunnions shall be secured to the transportation cask upper trunnions to avoid separation of the casks during canister transfer and result in potentially high radiation exposure to cask operating and plant personnel.

8. After the cask restraints are installed, verify the alignment of the transfer cask using optical survey equipment, in accordance with the Step 5 requirement.
9. Using a sling and a portable crane, unbolt the transfer cask ram access cover and remove it.
10. Install the pintle plate on the top of the canister. Attach the grapple to the end of the hydraulic ram.
11. Set up the hydraulic ram and attach it to the transfer cask top cover. Using optical survey equipment and the alignment marks on the transfer cask and the hydraulic ram, adjust the position of the ram until it is aligned horizontally and vertically with the transfer cask.
12. Engage the grapple on the hydraulic ram with the pintle.

8.2.5.3 Transfer Canister to Transportation Cask

1. Activate the hydraulic ram and push the canister into the transportation cask, until it is fully inserted. The canister is fully inserted when a measuring device on the hydraulic ram confirms that the prescribed distance has been traveled after the canister is inserted into the transportation cask.
2. Disengage the grapple from the pintle and retract the ram.
3. Check the radiation levels near the mid-plane (mid-point) of the transportation cask to assure that dose rates are below maximum expected values, in accordance with site-specific procedures and ALARA requirements (discussed in a separate transportation license application). If the radiation levels exceed these requirements, notify the cognizant management representative. Await further instructions before proceeding. If radiation levels are acceptable, proceed.

   NOTE: Temporary shielding may be used to lower personnel radiation exposures. The shielding should be installed in accordance with site-specific procedures.

8.2.5.4 Ready Transportation Cask for Off-Site Transport

1. Disengage the hydraulic ram from the transfer cask and move it clear of the transfer cask.
2. Install the transfer cask ram access cover using a sling and a portable crane. Tighten the bolts to an AISC "snug tight" condition using a star pattern.
3. Remove the cask restraints from the transportation cask.
4. Using the skid positioning system, disengage the transfer cask from the docking collar on the transportation cask.
5. Using the skid positioning system, position the skid on the trailer to install the tie-downs. Secure the skid to the transfer trailer and retract the vertical jacks.
6. Replace the transfer cask bottom cover using the horizontal lid handling fixture and a portable crane. Tighten the bolts to an AISC "snug tight" condition using a star pattern.
7. Tow the transfer trailer and empty transfer cask to the designated equipment storage area.
8. Remove the docking collar from the transportation cask. Remove the pintle from the canister.
9. Install the transportation cask cover using the horizontal lid handling fixture and a portable crane. Tighten the bolts to an AISC "snug tight" condition using a star pattern. Install the tamper-indicating device.
10. Move the transfer trailer and transportation cask to the designated staging area for preparations for off-site transport.

    NOTE: The subsequent procedures for preparation of the transportation cask for off-site transport are provided in a separate transportation license application.

8.2.6 Vertical Canister Transfer from Transfer Cask to Transportation Cask

The following outline describes the major procedural steps for vertically transferring a loaded FuelSolutions™ canister from a FuelSolutions™ W100 Transfer Cask to a transportation cask. The transfer cask/canister is moved from the cask decontamination area and docked with a transportation cask. The canister is then lowered into the transportation cask using the canister vertical lift fixture. The transportation cask, with the canister, is then downended onto a trailer and transported from the plant's cask receiving bay to a designated staging area for preparation for off-site transport. A flowchart of the sequence for transferring a canister from a transfer cask to a transportation cask using vertical canister transfer is provided in Figure 8.2-6.

8.2.6.1 Stage Transportation Cask

NOTE: Prior to performing the following operations, prepare the transportation cask as described in a separate transportation license application. The preparation of the transportation cask is similar to the transfer cask preparation process presented in Section 8.3.1.

NOTE: Prior to performing the following operations, ready the transfer cask and canister for vertical transfer, as described in Section 8.1.3 through 8.1.9, 8.2.1, or 8.2.2.

1. Position the horizontal transfer trailer with the transportation cask in the plant's cask receiving bay. Assure that the trailer is accessible to the fuel building crane, with the trailer supported on vertical jacks.
2. Remove the top halves of the pillow blocks on the upper trunnions of the transportation cask.
3. Engage the upper trunnions of the transportation cask with the cask lifting yoke.
4. Raise the transportation cask from the support skid, while simultaneously moving the crane toward the lower trunnions, until the cask is rotated to its vertical position.
5. Move the transportation cask to the area in the cask receiving bay designated for vertical canister transfer.

CAUTION: Horizontal movement of the cask should always be in a direction perpendicular to the plane of the trunnions. In this way, any inadvertent impact with an object will cause the cask to remain engaged with the lifting yoke and to rotate on the trunnions.

NOTE: Alternatively, a transportation cask may stay on the transfer trailer skid positioning system, resting on its lower trunnions, using a stabilizing system that can be installed for loading of the canister. The transportation cask stabilizing system consists of a self-contained "stiff arm" attached to the transfer skid and the transportation cask that holds the cask rigidly in the vertical position. The transportation license application has additional descriptions of this system.

6. Disengage the lifting yoke from the transportation cask trunnions.
7. Install the docking collar on the transportation cask.

8.2.6.2 Prepare Transfer Cask and Canister

1. If not already performed, install the transfer cask top cover, engage the lifting yoke on the transfer cask trunnions, and move the transfer cask to the cask decontamination area, disengage the lifting yoke, and remove the transfer cask top cover. Disengage the lifting yoke.
2. Install the canister lift adapter onto the canister outer closure plate. Tighten the bolts to an AISC "snug tight" condition.
3. Install the canister vertical lift fixture on the cask lifting yoke.

   NOTE: Rigging and handling operations must comply with the plant's NUREG-0612/ANSI N14.6 commitments.

4. Engage the lifting yoke on the transfer cask trunnions. Connect the canister lift fixture to the canister lift adapter by installing the connecting pins.
5. Remove the transfer cask bottom cover bolts.

8.2.6.3 Move Transfer Cask to Transportation Cask

1. Check to be sure the lifting yoke is properly engaged with the transfer cask trunnions.
2. Using the canister lift fixture, raise the canister a small amount to assure proper engagement.
3. Move the transfer cask from the decontamination area to the plant's cask receiving bay.

   CAUTION: Horizontal movement of the cask should always be in a direction perpendicular to the plane of the trunnions. In this way, any inadvertent impact with an object will cause the cask to remain engaged with the lifting yoke and to rotate on the trunnions.

   WARNING: To prevent inadvertent radiation exposure to cask operating and plant personnel, do not lower the loaded canister from the transfer cask. Lock out the controls on the canister vertical lift fixture until the transfer cask is seated on the transportation cask docking collar.

4. Position the transfer cask above the empty transportation cask in the cask receiving bay.
5. Visually verify the alignment of the transfer cask with the docking collar installed on the transportation cask (match the alignment marks on the docking collar, transfer cask, and transportation cask). Lower the transfer cask into the docking collar.

   NOTE: Care should be taken to protect the sealing surfaces of the transfer cask bottom flange.

6. When needed at a plant as a positive means for assuring lateral stability, the lifting yoke may remain engaged with the transfer cask trunnions, maintaining a slight tension applied by the fuel building crane. When positive lateral stability is not needed, the alternative canister vertical lift fixture described in Section 1.2.1.4.3 may be used and the cask restraints installed between the docking collar and the transfer cask lower trunnions. For the latter alternative, the lifting yoke is disengaged from the transfer cask.

NOTE: If previously disconnected, reconnect the neutron shield overflow/pressurization bottle to the transfer cask neutron shield vent fitting.

8.2.6.4 Transfer Canister to Transportation Cask

1. Lower the canister into the transportation cask with the canister vertical lift fixture.
2. Perform a general radiation survey of the transportation cask to assure that dose rates are within expected values. The dose rates measured near the midpoint of the transportation cask side should be in accordance with the plant-specific requirements.
3. Remotely remove the connecting pins from the canister lift fixture attachment to the canister lift adapter.
4. Retract the canister lift fixture within the transfer cask cavity.
5. Lift the empty transfer cask from the transportation cask docking collar and move it to the cask decontamination area.

   NOTE: Prior to reinstalling the transfer cask bottom cover, check the bottom flange seal surface and bottom cover seals for any condition that might affect water leak tightness of this joint.

6. Set the transfer cask down on its bottom cover, verifying alignment with the bottom cover guide pins. Engage the bolts on the transfer cask bottom cover and tighten to an AISC "snug tight" condition using a star pattern.

   CAUTION: Horizontal movement of the cask should always be in a direction perpendicular to the plane of the trunnions. In this way, any inadvertent impact with an object will cause the cask to remain engaged with the lifting yoke and to rotate on the trunnions.

7. Remove the canister lift adapter from the canister outer closure plate.
8. Remove the docking collar from the transportation cask.
9. Install the transportation cask cover and tighten the bolts to an AISC "snug tight" condition using a star pattern.

   NOTE: Final tightening of the bolts for off-site transport is performed below.

8.2.6.5 Downend Transportation Cask on Horizontal Transfer Trailer

1. Engage the lifting yoke with the lifting trunnions on the transportation cask. Lift the cask just far enough to allow the weight of the cask to be distributed onto the yoke lifting arms. Re-inspect the lifting arms to assure that they are properly positioned on the cask trunnions.
2. Lift the cask from the canister transfer area over the support skid on the trailer. Verify the proper orientation of the offset lower trunnions with the support skid pillow blocks. Rotate the cask, as required, to align the cask lower trunnions with the support skid pillow blocks at the back end of the trailer.

   CAUTION: Horizontal movement of the cask should always be in a direction perpendicular to the plane of the trunnions. In this way, any inadvertent impact with

an object will cause the cask to remain engaged with the lifting yoke and to rotate on the trunnions.

3. Position the cask lower trunnions onto the support skid pillow blocks.
4. Lower the cask while simultaneously moving the crane away from the lower trunnions toward the upper trunnion pillow blocks.
5. Lower the cask onto the skid until the weight of the cask is distributed to the trunnion pillow blocks.
6. Inspect the trunnions to assure that they are properly seated onto the skid.
7. Disengage the lifting yoke from the transportation cask lifting trunnions.
8. Install the top halves of the support skid pillow blocks.
9. Lower the transfer trailer off its vertical jacks.
10. Using a suitable tow vehicle, transport the transportation cask with the canister from the plant's cask receiving bay to the designated staging area for preparation for off-site transportation.

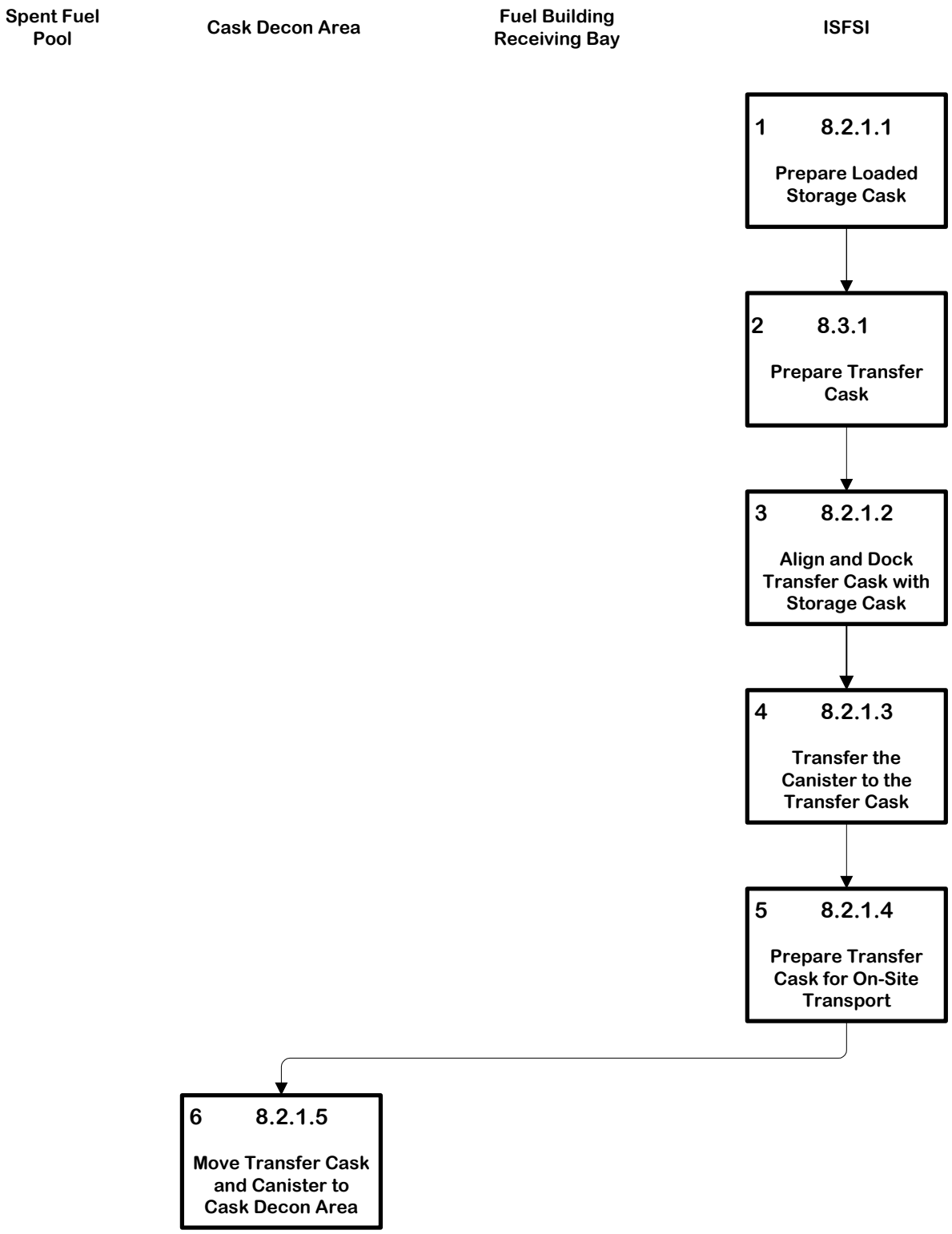

Figure 8.2-1 - Sequence for Retrieval of a Loaded Canister from a Storage Cask into a Transfer Cask - Horizontal Canister Transfer

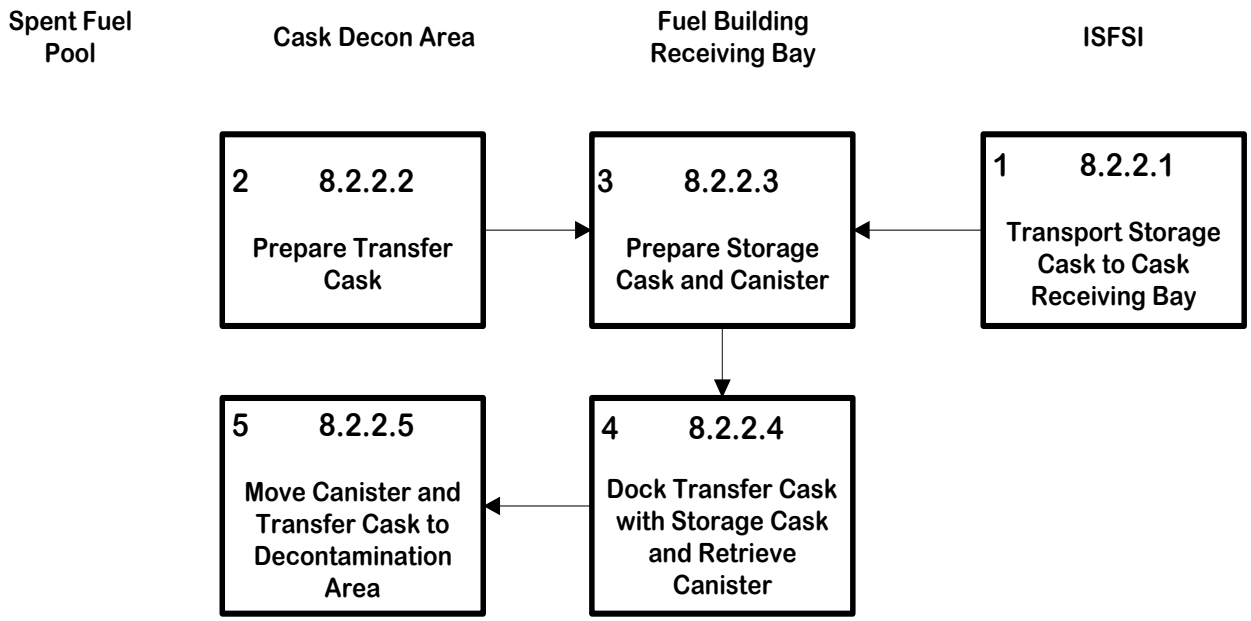

Figure 8.2-2 - Sequence for Retrieval of a Loaded Canister from a Storage Cask into a Transfer Cask - Vertical Canister Transfer

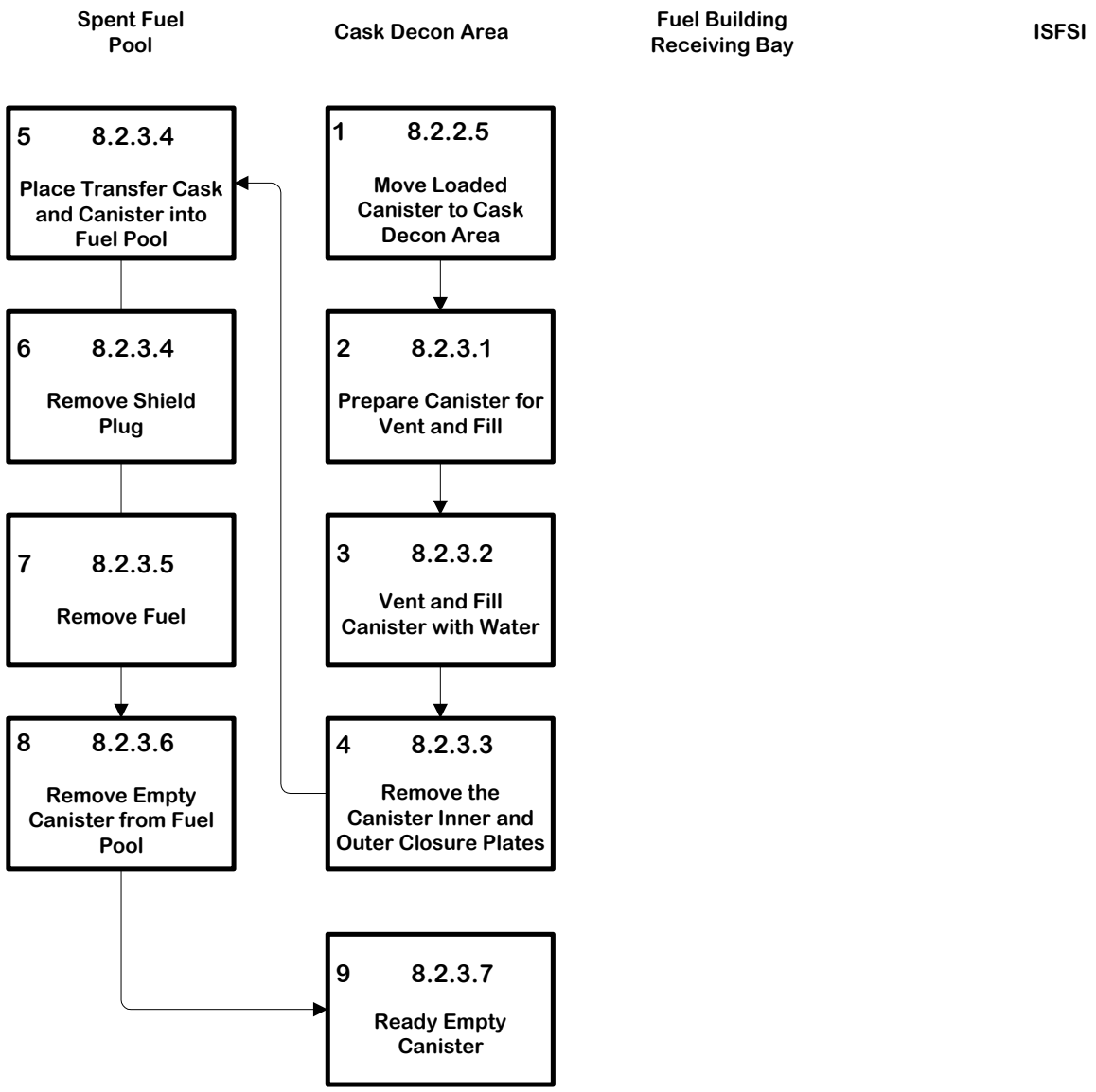

Figure 8.2-3 - Sequence for Opening and Unloading Fuel

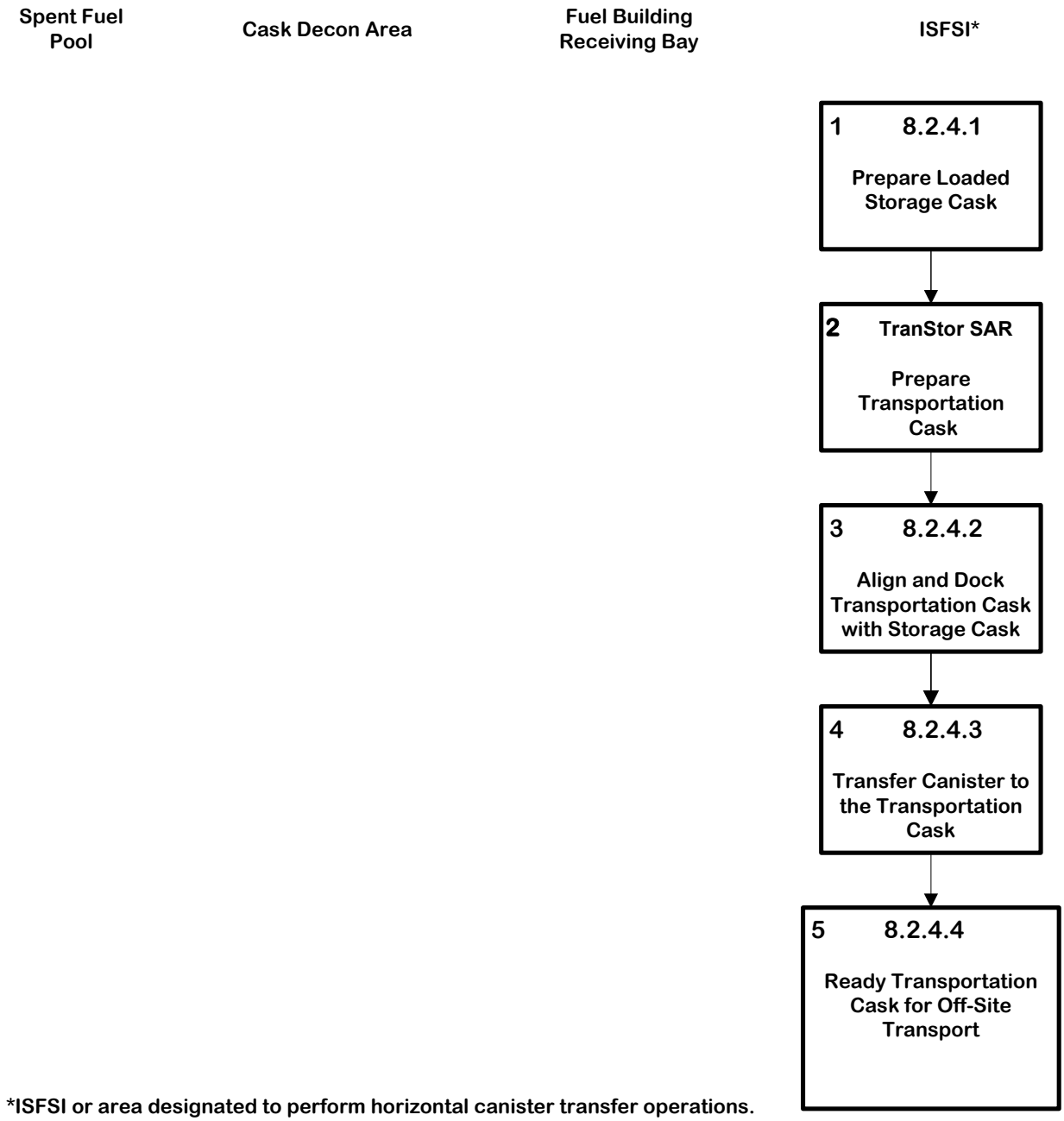

Figure 8.2-4 - Sequence for Transferring a Canister from a Storage Cask to a Transportation Cask - Horizontal Canister Transfer

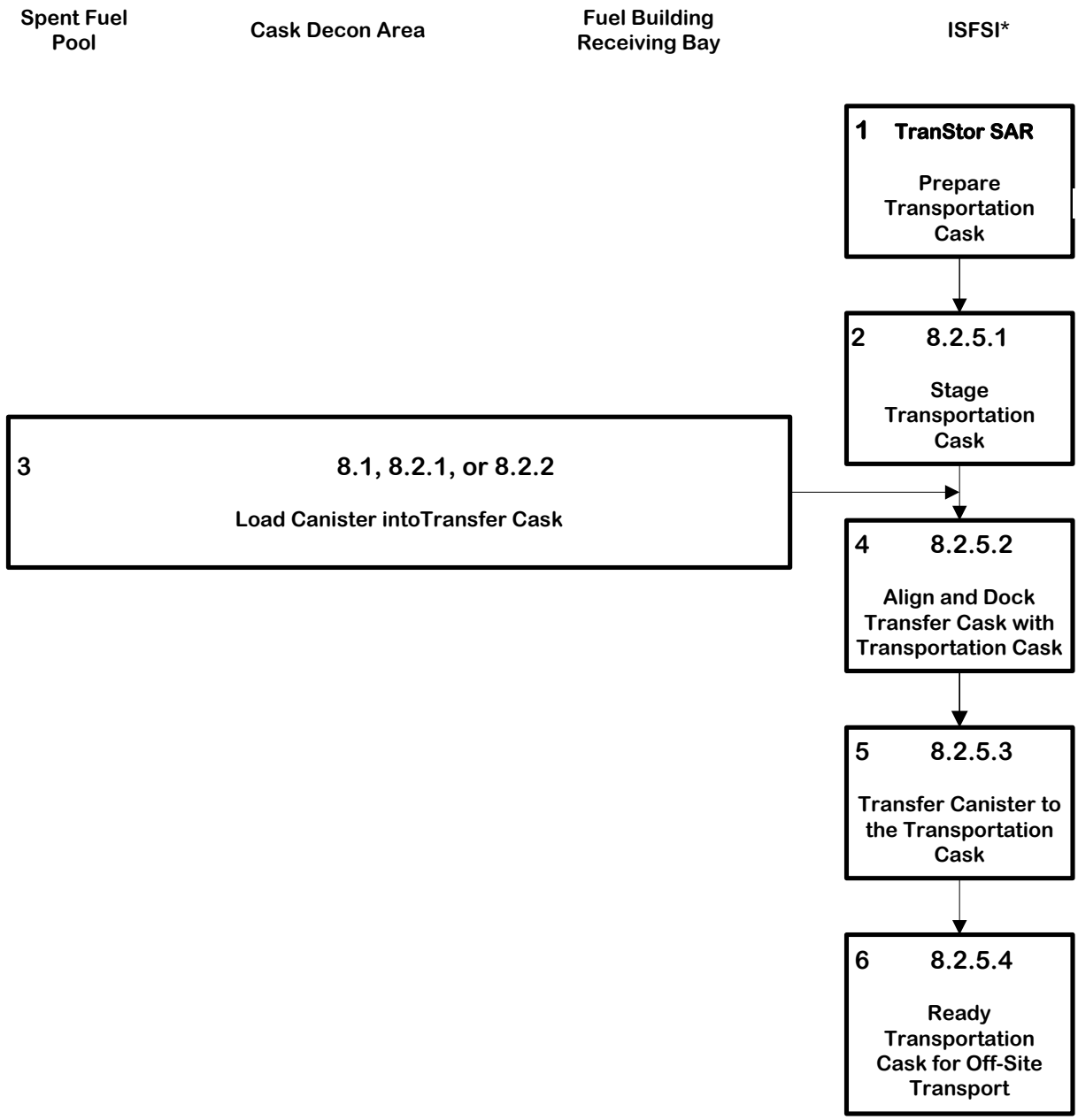

*ISFSI or area designated to perform horizontal canister transfer operations.

Figure 8.2-5 - Sequence for Transferring a Canister from a Transfer Cask to a Transportation Cask - Horizontal Canister Transfer

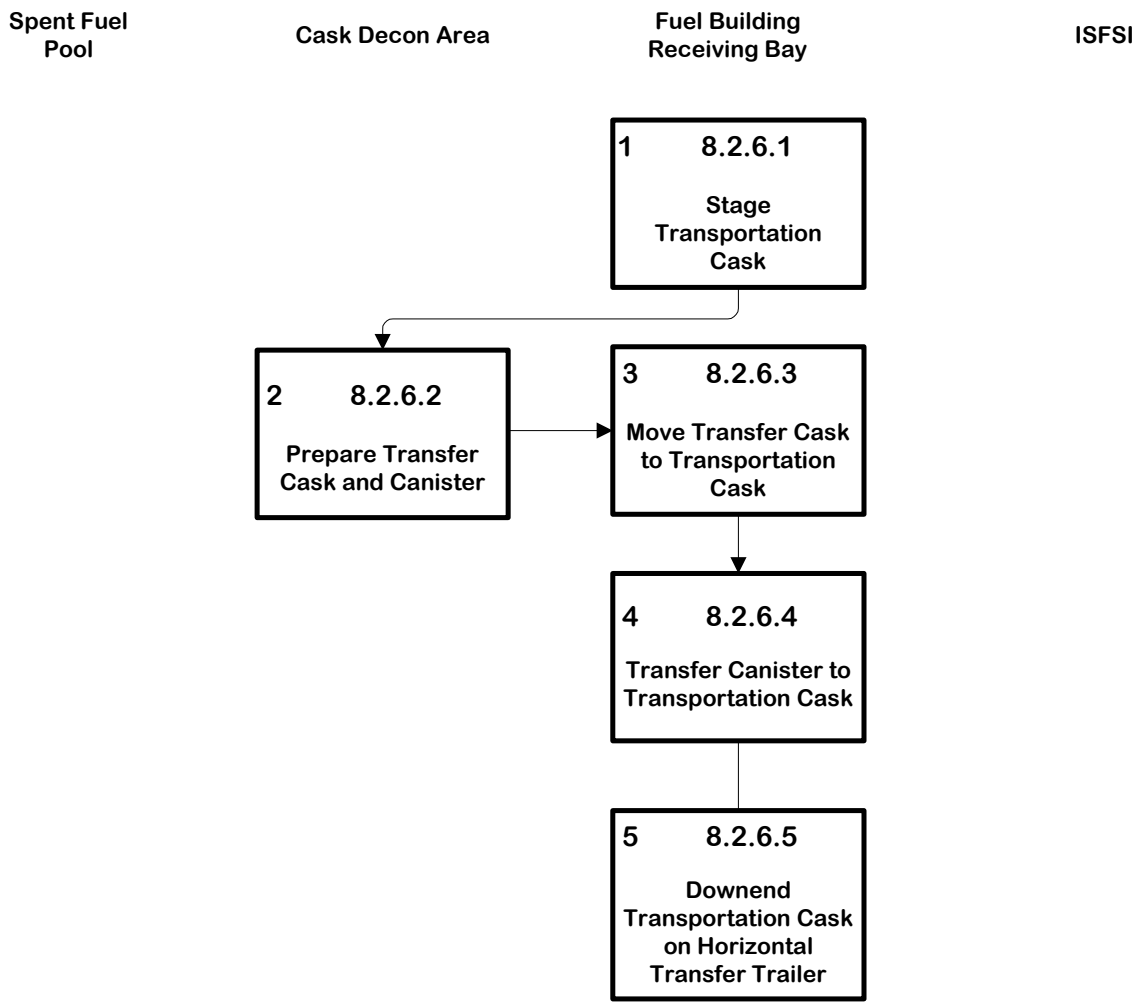

Figure 8.2-6 - Sequence for Transferring a Canister from a Transfer Cask to a Transportation Cask - Vertical Canister Transfer

This page intentionally left blank.

8.3 Preparation of the Cask

8.3.1 Preparation of Transfer Cask for Canister Loading

The following outline describes the major procedural steps for preparing a FuelSolutions™ W100 Transfer Cask for use. The transfer cask is to be decontaminated and inspected for physical damage and debris. The inspection, maintenance, and repair of the transfer cask shall be performed in accordance with written procedures. The following tasks may be performed in a suitable staging area or inside the plant's cask receiving bay with the transfer cask in a horizontal or vertical orientation, as practical.

1. Prior to being placed into service, a transfer cask is to be cleaned and decontaminated, as necessary, to comply with the site decontamination limits, as applicable.
2. With the transfer cask oriented horizontally on a transportation skid or the horizontal transfer skid, remove the transfer cask bottom cover, and examine the cask cavity for any physical damage. Repair any damage, clean, and remove any loose debris, as required.
3. If a short FuelSolutions™ canister is to be used, attach the cask cavity spacer to the transfer cask bottom cover.
4. If needed, reapply dry film lubricant to the canister guide rails.
5. Inspect and replace the bottom cover O-ring seal, as necessary. Inspect and replace the bolt seals, as necessary. Position the bottom cover with the seal onto the transfer cask body. Install the bottom cover bolts and tighten in a star pattern to an AISC "snug tight" condition.
6. If applicable, install a bottom cover protective shield to prevent ground-in contamination.
7. Inspect the cask trunnions for any physical damage. Repair any damage, as required. Apply lubricant as necessary.
8. Inspect the neutron shield for any physical damage. Repair any damage, as required. Inspect the quick disconnect fittings to assure they are in proper working order. Repair or replace the fittings, as necessary.
9. If the plant's cask handling crane lifting capacity is sufficient, fill the cask liquid neutron shield with clean demineralized water or a suitable alternative liquid using the neutron shield cavity fill port.
10. Move the empty transfer cask into the cask receiving bay of the plant's fuel building if not already there.

NOTE: The repair of any transfer cask damage shall be performed and documented in accordance with an established procedure.

8.3.2 Preparation of a Storage Cask for Canister Loading

The following outline describes the major procedural steps for preparing a FuelSolutions™ W150 Storage Cask to receive a loaded canister.

8.3.2.1 Preparation for Horizontal Canister Transfer

For the horizontal canister transfer process, a storage cask is rotated to a horizontal orientation in the area designated for horizontal canister transfer for inspection and installation of the docking collar.

1. Thoroughly inspect the cask for any damage. Initiate repairs, if required.

   NOTE: The repair of any storage cask damage shall be performed and documented in accordance with an established procedure.

2. Verify that the storage cask tie rods are tensioned to the original assembly requirements.
3. Place the storage cask impact limiter assemblies in the pad depression (pit) in the area designated for horizontal canister transfer operations.

   NOTE: The storage cask impact limiter pit may be placed anywhere within the ISFSI or the site's owner-controlled area based on a 10CFR72.212 safety evaluation.

4. Position the upender/downender so that it straddles the storage cask impact limiter.
5. Move the empty storage cask into position on the storage cask impact limiter pit using air pallets, a vertical transport trailer, or vertical cask transporter as needed. Position the storage cask in the upender/downender. Secure the storage cask to the upender/downender.
6. If required, remove the screens for the two storage cask outlet vents that are oriented horizontally and install temporary shielding in or over these vent openings. Do not cover or block the two storage cask outlet vents that are oriented vertically.
7. Using a portable crane, install (if not already installed) and engage the horizontal lid handling fixture on the storage cask cover. Remove the storage cask cover bolts and remove the cover.
8. Inspect the cavity of the storage cask and the air inlets and outlets, and remove any debris.
9. If needed, reapply dry film lubricant to the guide rails.
10. Install the storage cask docking collar.

8.3.2.2 Preparation for Vertical Canister Transfer

For the vertical canister transfer process, a storage cask is transported to the plant's cask receiving bay for inspection and installation of the docking collar.

1. Using a suitable tow vehicle, move the empty storage cask to the plant's cask receiving bay. An alternate means of transport (e.g., a storage cask vertical transport trailer or a vertical transporter as described in Section 1.2.1.4.3) may also be used in lieu of air pallets.
2. Verify that the storage cask tie rods are tensioned to the original assembly requirements.
3. If required, remove the screens for the storage cask outlet vents and install temporary shielding in or over these vent openings.
4. Thoroughly inspect the cask for any damage. Initiate repairs if required.

   NOTE: The repair of any storage cask damage shall be performed and documented in accordance with an established procedure.

5. Remove the storage cask cover bolts. Remove the cover using a sling and the fuel building crane.
6. Inspect the cavity of the storage cask and air inlets and outlets, and remove any debris.
7. Install the storage cask docking collar.

NOTE: Rigging and handling operations must comply with the plant's NUREG-0612/ANSI N14.6 commitments.

This page intentionally left blank.

9. ACCEPTANCE CRITERIA AND MAINTENANCE PROGRAM

This chapter summarizes the acceptance tests and maintenance program to be performed on the major FuelSolutions™ Storage System components that are classified as important to safety, which include the FuelSolutions™ W150 Storage Cask, the FuelSolutions™ W100 Transfer Cask, and the storage cask impact limiter. The acceptance tests to be performed on each FuelSolutions™ canister, also classified as important to safety, are contained in Chapter 9 of the respective FuelSolutions™ Canister Storage FSAR. The acceptance tests and maintenance programs to be performed on the FuelSolutions™ Storage System support equipment will be in accordance with the fabrication specifications and maintenance manuals for this equipment.

The following sections present the inspection and acceptance testing needed to demonstrate that the fabricated storage cask, transfer cask, and storage cask impact limiters meet the design and code of construction requirements set forth in this FSAR. In addition, the periodic maintenance programs describe the activities to be carried out to assure that the storage cask, transfer cask, and storage cask impact limiters are maintained in proper working condition, in order to continue to perform their intended functions.

As used in the sections that follow relative to a storage cask, transfer cask, or storage cask impact limiters, the term “preoperation” refers to that period of time from the receipt inspection of one of these FuelSolutions™ system components until it is actually loaded with or used in the loading of a canister containing SNF assemblies.

This page intentionally left blank.

9.1 Acceptance Criteria

This section discusses the inspection and acceptance tests that are to be performed prior to first use of each FuelSolutions™ W150 Storage Cask, each W100 Transfer Cask, and each storage cask impact limiter. These inspections and tests provide assurance that these components are constructed and initially operated in accordance with the requirements set forth in this FSAR. The inspections and acceptance testing to be performed are intended to demonstrate that the FuelSolutions™ Storage System, using the FuelSolutions™ W150 Storage Cask, W100 Transfer Cask, and storage cask impact limiter, has been fabricated in accordance with the design and code of construction requirements contained in Section 2.1.2 of this FSAR.

These inspections and tests are also intended to demonstrate that the initial operation of the system complies with the applicable regulatory requirements and the *technical specifications* contained in Chapter 12 of this FSAR. Noncompliances encountered during the required inspections and tests performed for the FuelSolutions™ storage system components will be corrected or dispositioned to bring the item into compliance with this FSAR. This is done in accordance with the Energy*Solutions* Spent Fuel Division, Inc. (Energy*Solutions* SFD) Quality Assurance Program, discussed in Chapter 13 of this FSAR, or the licensee's NRC-approved Quality Assurance program.

9.1.1 Canisters

The inspections and acceptance tests, together with the applicable acceptance criteria, to be performed for the FuelSolutions™ canisters are discussed in Section 9.1 of the respective FuelSolutions™ Canister Storage FSARs.

9.1.2 Storage Cask

The FuelSolutions™ W150 Storage Cask is classified as important to safety. Individual storage cask components, assemblies, and piece parts are required to be designed, fabricated, constructed, assembled, inspected, and tested to the quality standards commensurate with the item's graded quality category. The quality categories for important to safety items are identified on the applicable drawings provided in Section 1.5.1.1.2 of this FSAR.

The inspection and testing acceptance criteria applicable to each FuelSolutions™ W150 Storage Cask are listed in Table 9.1-1 and discussed further in the paragraphs that follow. These inspections and tests are intended to demonstrate that the storage cask has been fabricated, constructed, and examined in accordance with the criteria contained in Section 2.1.2.1 of this FSAR. Preoperational testing is intended to demonstrate that the FuelSolutions™ W150 Storage Cask interfaces properly with other FuelSolutions™ Storage System components and will perform its intended operational functions, as described in Chapter 8 of this FSAR.

Table 9.1-1 - FuelSolutions™ W150 Storage Cask Inspection and Test Acceptance Criteria (3 Pages)

Function	Method of Verification		
	Fabrication	Preoperation	Maintenance
Visual Inspection and Nondestructive Examination (NDE)	Structural Steel Components: a) Assembly and examination will be performed per AISC[1] and AWS.[2] b) NDE of weldments will be defined on drawings using standard AWS NDE symbols and/or notations. Reinforced Concrete Components: a) Assembly and examination will be performed per ACI 318,[3] as discussed in Section 2.6.1. b) Materials verification (rebar, cement, aggregates, admixtures, water) will be performed and records will be kept in a manner commensurate with the item's quality category. c) Batch plant operations (proper mix design, aggregate moisture, instruments/dispensing equipment acceptable, plant and truck operations acceptable) will be monitored. d) Rebar placement (proper size and spacing) will be monitored. e) Concrete placement (concrete consistency to avoid segregation) will be monitored. f) Concrete placement tests (slump, temperature, density, air entrainment) will be performed. General: a) Cleanliness of the storage cask will be verified upon completion of fabrication per NQA-1. b) Protection of the storage cask at the completion of fabrication will be verified per NQA-1.	a) The storage cask will be visually inspected prior to placement in service. b) Fit-up with all mating components (shielding collar, cover, etc.) will be performed directly whenever practical or using templates or other means. c) Tie rods will be inspected for proper tension to ensure compliance with design requirements. d) Storage cask protection at the licensee's facility will be verified. e) Exclusion of foreign material will be verified prior to placing in service at the licensee's facility.	a) Indications identified during visual inspection will be corrected or reconciled. b) Monitor exposed surfaces for cracking and spalling and repair damage as necessary.

[1] American Institute of Steel Construction (AISC), *Manual of Steel Construction*, Ninth Edition.

[2] American Welding Society (AWS) D1.1-96, *Structural Welding Code - Steel.*

[3] American Concrete Institute (ACI) 318-95, *Building Code Requirements for Reinforced Concrete*.

Table 9.1-1 - FuelSolutions™ W150 Storage Cask Inspection and Test Acceptance Criteria (3 Pages)

Function	Method of Verification		
	Fabrication	Preoperation	Maintenance
Structural	a) No pressure tests are required for the storage cask during fabrication. b) 28 day concrete compressive strength tests will be performed.	a) No pressure tests are required for the storage cask during preoperation. b) Tension of storage cask tie-rods will be checked per design requirements.	a) No structural or pressure tests are required for the storage cask during operation.
Leak Tests	a) None.	a) None.	a) None.
Criticality Safety	a) No neutron absorber tests are required for criticality safety during fabrication.	a) None.	a) None.
Shielding Integrity	a) Concrete density will be tested at time of placement. b) Wall thickness (dimensions between liner and formwork) will be confirmed as conforming to the drawings prior to concrete placement. c) Verification of materials properties for aggregates, cement, and rebar will be performed.	a) None.	a) Exposed surfaces will be monitored for cracking and spalling and repair damage as necessary.

Table 9.1-1 - FuelSolutions™ W150 Storage Cask Inspection and Test Acceptance Criteria (3 Pages)

Function	Method of Verification		
	Fabrication	Preoperation	Maintenance
Thermal Acceptance	a) Liner ID and vent size, configuration, and placement will be verified. b) Thermal shield materials and placement will be verified. c) Thermowell placement will be verified. The thermocouple will be mounted in the well after a system calibration check.	a) No preoperational testing related to thermal characteristics of the storage cask is required. b) The inlet and outlet vents and thermal shield annulus will be inspected to verify they are clear. c) The thermocouples will be verified to be functioning properly.	a) Monitoring of vent openings for debris and other obstructions will be performed per Section 12.2.3.1. b) Monitoring of temperature will be performed using the thermocouples placed in the center concrete segment per Section 12.2.3.2. c) Check the area between the canister and the interior surface of the first storage cask placed into service at a given installation every five years to ensure that damage has not taken place that may jeopardize airflow around the canister. Verification may be by direct or indirect visual inspection.
Cask Identification Inspection	a) Identification plate attached at completion of assembly.	a) The identification plate will be checked prior to loading.	a) The identification plate will be periodically inspected per licensee procedures and will be repaired or replaced if damaged.
Functional Performance Tests	a) Alignment and adjustment of the canister support rails to be established following assembly. b) Location of alignment marks to be established during fabrication. c) Top cover fit-up with top shield ring to be verified following fabrication. d) Tensioning of tie-rods to be verified following assembly.	a) Alignment and adjustment of the canister support rails to be verified during preoperation. b) Top cover fit-up with top shield ring to be verified during preoperation. c) Tensioning of tie-rods to be verified during preoperation.	a) Check of alignment and adjustment of the canister support rails is not required during operation. b) Legibility of alignment marks to be verified prior to canister retrieval. c) Check of top cover fit-up with top shield ring is not required during operation. d) Tensioning of tie-rods to be verified prior to canister retrieval.

9.1.2.1 Visual Inspection and Nondestructive Examination

The structural, thermal, radiological, and functional performance of the FuelSolutions™ W150 Storage Cask is assured by the verification of the material properties, fabrication processes, and dimensions. Documentation prepared during storage cask fabrication is to provide evidence that materials and fabrication comply with the design requirements. The inspections to be performed to assure storage cask performance include the following:

1. The storage cask structural steel components and parts are to be fabricated and examined in accordance with the codes and standards used for design and construction, as described in Section 2.1.2.1 of this FSAR. The non-destructive examinations (NDE) of welds specified on approved drawings are to be performed in accordance with approved procedures, detailed on a weld inspection plan, and performed by inspection personnel who are certified in accordance with the code of construction requirements.
2. Prior to pouring of the storage cask concrete, the concrete supplier's batch plant is to be inspected to verify the following to ensure that the mix complies with the requirements of the concrete mix design:
   - Verification that batch plant equipment meets the applicable requirements.
   - Verification that mix design is controlled within the batch plant.
   - Materials (aggregates, cement, water, admixtures and rebar) have been verified to comply with the applicable requirements.
   - Material control and traceability has been established.
   - Concrete trucks have been inspected and meet the applicable requirements.
3. Concrete placement testing is to be performed to verify slump, temperature, density and air entrainment. Compressive strength tests are to be performed in accordance with the code of construction.
4. The as-fabricated storage cask segments are to be inspected for compliance with the design and code of construction requirements prior to shipment from the fabricator's facility. These are to include a dimensional inspection to verify that the storage cask can be properly assembled and can interface with the other FuelSolutions™ Storage System components and equipment. The following dimensions are to be verified to comply with design requirements:
   - Inside diameter
   - Outside diameter
   - Inside length
   - Base thickness
   - Lid thickness
   - Vent dimensions
   - Tie-rod sleeve placement.

5. A documentation package is to be prepared and maintained during fabrication and construction to include records and evidence that the required inspections and tests have been performed and are in compliance with quality assurance program requirements. Prior to assembly of the storage cask segments, the documentation package is to be reviewed to verify that the cask has been properly fabricated and inspected in accordance with the design and code of construction requirements. Typical documentation that is to be retained include:
   - Batch Ticket
   - Material Test Reports
   - Welder Certification and Inspector Certification
   - Calibration Records
   - Surveillance/Inspection Reports (oversight of batch plant operations)
   - Concrete Density Test Records
   - Compressive Strength Test Records
   - Completed Travelers and Referenced Procedures
   - Nonconformance Reports
   - Procurement Records
   - As-Built Records
6. Storage cask cleanliness will be verified as meeting the criteria specified in ASME NQA-1, Subpart 2.1, Class D upon completion of fabrication.
7. Storage cask protection at the completion of fabrication will be verified to be in accordance with the requirements of ASME NQA-1, Subpart 2.2, Level D.
8. Storage cask protection at the licensee's facility will be verified to be commensurate to the requirements specified for fabrication.
9. Storage cask foreign material exclusion will be verified prior to placing in service at the licensee's facility.
10. The storage cask nameplate is to be verified to assure it is properly attached and contains the required information. Specifically, the cask model number, the cask serial number, and the empty weight are to be included. Additional optional information may also be added to the nameplate (see Section 9.1.2.7).

9.1.2.2 Structural

The structural performance of the FuelSolutions™ W150 Storage Cask is assured by verification of the construction material properties, concrete strength, rebar strength, and rebar placement. The inspections to be performed to assure storage cask structural performance include the following:

1. A representative concrete sample in each storage cask segment is to be tested, to verify that it meets or exceeds the minimum design requirements. Ongoing testing is to include taking of

slumps, temperature, density, and air entrainment. In addition, compressive strength is to be tested by performing break tests on concrete aged 28 days.

2. During storage cask assembly, the storage cask tie-rods, which join the individual concrete segments together, are to be properly tensioned in accordance with the drawing requirements.

9.1.2.3 Leak Tests

The FuelSolutions™ W150 Storage Cask does not have any designated leak test requirements (the canister provides for confinement).

9.1.2.4 Criticality Safety

Neutron absorber testing is not performed for the storage cask. Neutron absorbers for criticality safety are provided by the canister.

9.1.2.5 Shielding Integrity

The shielding performance of the FuelSolutions™ W150 Storage Cask is assured by verification of the material properties and dimensions. The inspections to be performed to assure storage cask shielding performance include the following:

1. To assure adequate shielding, the density of each batch of concrete poured within each cask segment and lid is to be verified to meet or exceed the minimum density, in accordance with design requirements.
2. Following set up of the concrete forms, but prior to concrete pouring, concrete wall thicknesses are to be measured to verify dimensions are within design requirements. This measurement is the distance from the inside of the form to the inside of the steel shell segment. The measurements are to be taken in at least four locations around the formed segment.
3. Following canister loading into each storage cask, dose rate measurements are to be taken to verify compliance with the *technical specification* contained in Section 12.3 of this FSAR.

9.1.2.6 Thermal Acceptance

The thermal performance of the FuelSolutions™ W150 Storage Cask is demonstrated through analysis and periodic monitoring during service. The major characteristics affecting thermal performance of the storage cask are ventilation air flow cross-section and thermal shield installation. Proper operation and calibration of the storage cask temperature instrumentation allows development of temperature trends for identification of off-normal thermal events, such as blocked air vents. The inspections to be performed to assure storage cask thermal performance include the following:

1. The dimensions, cross-sections, and placement of the storage cask air inlet and outlet vent flow channels are to be measured and verified against the dimensional requirements.
2. The materials (including coating systems), dimensions, and placement of the storage cask thermal shield are to be verified in accordance with the design requirements. The thermal shield coating system will be inspected to assure its application per the manufacturer's instructions.

The storage cask thermocouples are to be checked for proper operation and included in the system calibration check prior to installation. This is done to provide accurate temperature readings after canister loading for use in determining compliance with the *technical specification* contained in Section 12.3 of the respective FuelSolutions™ canister storage FSAR.

9.1.2.7 Components

9.1.2.7.1 Cask Identification Inspection

Each storage cask is to be identified by a permanently attached identification plate that contains the following information:

- Name of Designer — Energy*Solutions* SFD
- Cask Serial Number — W150-XXX-Y

  where, W150 is the cask model number,

  XXX is a sequential number, and

  Y is the manufacturer identification
- Empty Weight — XXX,XXX lbs. (approx.)

In addition, the following optional information may be added:

- Loaded Canister Serial Number (entered at time of loading)
- Loading Date — mm/dd/yy
- Loaded Weight — XXX,XXX lbs. (approx.)
- C of C Number
- Manufacturer

Each cask identification plate is to be periodically inspected by the licensee to ensure its integrity and legibility, in accordance with plant-specific procedures. The identification plate is to be repaired if damaged.

9.1.2.7.2 Functional Performance Tests

The functional performance of each constructed FuelSolutions™ W150 Storage Cask is assured by verification of interface features and assembly fit-up. The inspections to be performed to assure storage cask functional performance include the following:

1. Proper alignment and adjustment of the storage cask canister support rails is to be verified.
2. The proper location of storage cask alignment marks is to be verified in accordance with design requirements to assure proper cask alignment during operations.
3. Proper fit-up of the installed storage cask top cover assembly with the storage cask top shield ring is to be verified in accordance with the design requirements.
4. Proper interface of FuelSolutions™ Storage System support equipment, including the docking collar and the storage cask lifting devices, is to be verified.

9.1.3 Transfer Cask

The FuelSolutions™ W100 Transfer Cask is classified as important to safety. Individual transfer cask components, assemblies, and piece parts are required to be designed, fabricated, constructed, assembled, inspected, and tested to the quality standards commensurate with the item's graded quality category. The quality categories for important to safety items are identified on the applicable drawings provided in Section 1.5.1.2.2.

The inspection and testing acceptance criteria applicable to each FuelSolutions™ W100 Transfer Cask are listed in Table 9.1-2 and discussed further in the paragraphs that follow. These inspections and tests are intended to demonstrate that the transfer cask has been fabricated, constructed, and examined in accordance with the criteria contained in Section 2.1.2.2 of this FSAR. Preoperational testing is intended to demonstrate the FuelSolutions™ W100 Transfer Cask interfaces properly with other FuelSolutions™ Storage System components and will perform the intended operational functions as described in Chapter 8 of this FSAR.

9.1.3.1 Visual Inspection and Nondestructive Examination

The structural, thermal, radiological, and functional performance of the FuelSolutions™ W100 Transfer Cask is assured by verification of the material properties, fabrication processes, and dimensions. Documentation prepared during transfer cask fabrication is to provide evidence that materials and fabrication comply with the design requirements. Fit-up of the transfer cask is assured by testing operational interfaces with other FuelSolutions™ Storage System components. The inspections to be performed to assure transfer cask performance include the following:

1. The transfer cask steel components are to be fabricated and examined in accordance with the codes and standards used for design and construction as specified in Section 2.1.2.2 of this FSAR. The NDE of welds specified on approved drawings are to be performed in accordance with approved procedures, detailed on a weld inspection plan, and performed by inspection personnel who are certified, in accordance with the code of construction requirements.
2. The as-fabricated transfer cask is to be inspected for compliance with design and code of construction requirements prior to shipment from the fabricator's facility. A complete inspection of all critical dimensions and component fit-up is to be performed. The following dimensions are to be verified to comply with design requirements:
   - Inside diameter
   - Outside diameter(s)
   - Inside length
   - Overall length
   - Cover thickness (top, bottom, and ram access)
   - Location of upper and lower trunnions
3. The weights of the cask body and covers are to be verified prior to shipment from the fabricator's facility.

4. A document package is to be prepared and maintained during fabrication to include records and evidence that required inspections and tests have been performed and are in compliance with an NRC-approved quality assurance program. Prior to shipment, the transfer cask document package is to be reviewed to verify that the cask was properly fabricated and inspected in accordance with the design and code of construction requirements. The documentation package is to include:
   - Material Test Reports
   - Inspector and Welder Certification Records
   - Load Test Reports
   - Functional Leak Test Reports
   - NDE Records
   - Inspection Records
   - Completed Shop Travelers and Referenced Procedures
   - Nonconformance Reports
   - Procurement Records
   - As-Built Records
5. The transfer cask nameplate is to be verified to assure it is properly attached and contains the required information. Specifically, the label is to include the cask model number, the cask serial number, the empty weight, and the maximum loaded weight. Additional optional information may also be added to the nameplate (see Section 9.1.3.7).
6. Transfer cask cleanliness will be verified as meeting the criteria specified in ASME NQA-1, Subpart 2.1, Class B upon completion of fabrication.
7. Transfer cask protection at the completion of fabrication will be verified to be in accordance with the requirements of ASME NQA-1, Subpart 2.2, Level D.
8. Transfer cask protection at the licensee's facility will be verified to be commensurate to the requirements specified for fabrication.
9. Transfer cask interior and exterior surfaces will be inspected to verify cleanliness and assure foreign material exclusion prior to placing in service at the licensee's facility.
10. Transfer cask visual and NDE inspections are to be performed in accordance with approved procedures to demonstrate that the as-fabricated transfer cask operates properly and interfaces correctly with other FuelSolutions™ Storage System components.

Table 9.1-2 - FuelSolutions™ W100 Transfer Cask Inspection and Test Acceptance Criteria (3 Pages)

Function	Method of Verification		
	Fabrication	Preoperation	Maintenance
Visual Inspection and Nondestructive Examination (NDE)	a) Assembly and examination will be performed per ASME Code, Subsection NF.[4] b) NDE of weldments will be defined on drawings using standard AWS NDE symbols and/or notations. c) The weights of the cask body and covers will be verified. d) Cleanliness of the transfer cask will be verified upon completion of fabrication per NQA-1[5]. e) Protection of the transfer cask at the completion of fabrication will be verified per NQA-1.	a) The transfer cask will be visually inspected prior to placement in service at the licensee's facility. b) Transfer cask protection at the licensee's facility will be verified. c) Transfer cask cleanliness and exclusion of foreign material will be verified prior to placing in the spent fuel pool.	a) The transfer cask will be dimensionally and visually inspected and nondestructively examined per ANSI N14.6.[6]
Structural	a) Verification of structural materials will be performed and certified material test reports (CMTRs) obtained in accordance with the item's quality category. b) Prior to neutron shield installation, a load test of the upper trunnions will be performed during fabrication per ANSI N14.6. c) A pressure test of the neutron shield will be performed during fabrication.	None.	None.

[4] American Society of Mechanical Engineers (ASME) Boiler and Pressure Vessel Code, Section III, Division 1, Subsection NF, *Component Supports*, 1995 Edition.

[5] American National Standards Institute (ANSI) NQA-1, *Quality Assurance Standards for Nuclear Facility Applications*, 1994 Edition, with 1995 Addenda.

[6] ANSI N14.6, *Special Lifting Devices for Shipping Canisters Weighing 10,000 pounds (4,500 kg) or More*, 1993.

Table 9.1-2 - FuelSolutions™ W100 Transfer Cask Inspection and Test Acceptance Criteria (3 Pages)

Function	Method of Verification		
	Fabrication	Preoperation	Maintenance
Leak Tests	a) Leak tests of the neutron shield, cask cavity vent and drain fittings, and top, bottom, and ram access cover neutron shielding cavities will be performed during fabrication. b) The leak tightness of the bottom cover seal will be verified during fabrication.	a) The leak tightness of the bottom cover seal will be verified during preoperation.	a) The leak tightness of the bottom cover seal will be monitored during operation. b) Leak tests of the neutron shield and cask cavity vent and drain fittings will be performed annually during operation.
Criticality Safety	None.	None.	None.
Shielding Integrity	a) Material verifications (lead, solid neutron shielding materials, shell plate, etc.) will be performed in accordance with the item's quality category. The required material certifications will be obtained. b) The placement of lead will be monitored. A gamma scan will be performed during fabrication to assure there are no unacceptable voids. c) The density of the solid neutron shielding material will be verified during fabrication.	a) None.	a) Radiation levels will be monitored when the transfer cask is loaded. Indications of damage to the shielding will be dispositioned per established procedures.
Thermal Acceptance	a) The thermal properties of the transfer cask are established by calculation and are not tested during fabrication. b) The thermowell is installed through the neutron shield cavity and placed against the outer shell of the transfer cask. This placement will be verified during fabrication. The thermocouple will be calibrated and then installed into the well.	a) The thermocouple will be verified to be functioning properly prior to loading a canister into the cask.	a) On an annual basis, the thermocouple is tested and maintenance is performed, as necessary, to ensure it is functioning properly. b) The shell of the transfer cask is monitored for temperature to verify thermal performance in accordance with Section 12.2.1.3 of this FSAR.

Table 9.1-2 - FuelSolutions™ W100 Transfer Cask Inspection and Test Acceptance Criteria (3 Pages)

Function	Method of Verification		
	Fabrication	Preoperation	Maintenance
Cask Identification Inspection	a) An identification plate will be placed on the transfer cask at completion of assembly.	a) The identification plate will be checked prior to loading.	a) The identification plate will be periodically inspected per licensee procedures and will be repaired or replaced if damaged.
Functional Performance Tests	a) Fit-up tests of transfer cask components (top, bottom, and ram access covers) will be performed during fabrication. b) Fit-up test of the transfer cask upper trunnions with the transfer cask lifting yoke will be performed. c) Fit-up test of the transfer cask trunnions with the horizontal transfer skid will be performed.	a) None.	a) Fit-up tests of the top, bottom, and ram access covers are required annually during operation.

9.1.3.2 Structural

The structural performance of the FuelSolutions™ W100 Transfer Cask is assured by verification of the material properties, trunnion strength, and transfer cask dimensions. The inspections to be performed to assure transfer cask structural performance include the following:

1. Material compliance is to be demonstrated through receipt inspections to assure that it meets the specified design, code of construction, and procurement requirements.
2. Prior to installing the neutron shield, the upper trunnions are to be subjected to a load test in accordance with the design requirements. The transfer cask is not classified as a "special lifting device." However, the transfer cask upper trunnions and the associated attachment welds to the structural shell and inner liner are to be load tested to 300 percent of the maximum service load in order to accommodate the NUREG-1536[7] interpretations of ANSI N14.6 and its application to transfer casks. After sustaining the load, critical areas are to be inspected by nondestructive testing.
3. A hydrostatic test of the neutron shield cavity is to be performed during fabrication.

9.1.3.3 Leak Tests

The FuelSolutions™ W100 Transfer Cask does not have any designated leak test requirements (the canister provides for confinement).

9.1.3.4 Criticality Safety

There are no neutron absorber tests required for the transfer cask as the canister incorporates neutron absorbing materials used for criticality control.

9.1.3.5 Shielding Integrity

The shielding performance of the FuelSolutions™ W100 Transfer Cask is assured by verification of the material properties and dimensions. The inspections to be performed to assure transfer cask shielding performance include the following:

1. Material compliance is to be demonstrated through receipt inspections to assure that it meets the specified design, code of construction, and procurement requirements.
2. Commercial grade dedication of the lead shielding is to be performed in accordance with an NRC-approved QA program per the transfer cask design requirements. Materials controls are to be established and independent material testing is to be performed in order to dedicate the lead for safety related use.
3. Transfer cask material dimensions and chemical composition are to be verified against the design requirements. The chemical composition of the lead, determined by independent material testing, is to be compared to the specified ASTM specification and grade. The thickness of the lead cavity is to be verified prior to lead pouring.

[7] NUREG-1536, *Standard Review Plan for Dry Cask Storage Systems*, U.S. Nuclear Regulatory Commission, January 1997.

4. The thickness of the lead gamma shield is to be verified by qualified personnel performing a gamma scan test in accordance with established procedures. This test will assure that the lead thickness contains no unacceptable voids and meets the requirements of this FSAR.
5. To assure that the transfer cask liquid neutron shield cavity will maintain its integrity, this cavity is to be tested as described in Section 9.1.3.2.
6. To assure that the transfer cask solid neutron shielding material will function as designed the density of the material is to be verified as part of the fabrication process.

9.1.3.6 Thermal Acceptance

There are no specific thermal acceptance tests for the FuelSolutions™ W100 Transfer Cask. Transfer cask thermal performance is demonstrated through analysis. The major characteristics affecting thermal performance are the transfer cask materials and dimensions. The inspections to be performed to assure transfer cask thermal performance include the following:

1. Material compliance (including coating systems) is to be demonstrated through receipt inspections to assure that it meets the specified design, code of construction, and procurement requirements. The neutron shield coating system will be inspected to assure application per the manufacturer's instructions.
2. Transfer cask dimensions are to be verified to assure they are in accordance with the design requirements.
3. During on-site transport and canister transfer operations, the thermocouple placed against the outer shell of the transfer cask is monitored in accordance with the *technical specification* contained in Section 12.3 of this FSAR. If the temperature measurement exceeds the limit, then an auxiliary heat exchanger will be connected to the transfer cask neutron shield cavity to circulate cooling water through the shield cavity to maintain temperatures within prescribed limits.

9.1.3.7 Components

9.1.3.7.1 Cask Identification Inspections

Each transfer cask is to be identified by a permanently attached identification nameplate that contains the following information:

- Name of Designer — Energy*Solutions* SFD
- Cask Serial Number — W100-XX-Y

  where, W100 is the cask model number,

  XX is a sequential number, and

  Y is the manufacturer identification
- Empty Weight — XXX,XXX lbs.
- Maximum Loaded Weight — XXX,XXX lbs. (approx.)

In addition, the following optional information may be added:

- Fabricator
- C of C number

Each cask nameplate is to be periodically inspected by the licensee to ensure its integrity and legibility, in accordance with site-specific procedures. The nameplate is to be repaired if damaged.

9.1.3.7.2 Functional Performance Tests

The functional performance of the FuelSolutions™ W100 Transfer Cask is assured by verification of transfer cask leak tightness, surface finish, component interfaces, and alignment marks. Leak tightness of the transfer cask liquid neutron shield, annulus vent and drain connections, and the bottom cover seals will assure that neutron shielding is maintained and that contaminated fuel pool water does not leak into the annulus between the transfer cask and a canister. The integrity of the bottom cover O-rings and bolt seals assures the leak tightness of the transfer cask bottom cover. The integrity of the liquid neutron shield pressure relief device is important for overpressure protection. The transfer cask external surface finish facilitates decontamination. The inspections and testing to be performed to assure transfer cask performance include the following:

1. The neutron shield outer shell and fittings are to be pressure tested and leak tested to verify that the component will perform properly during operation.
2. The transfer cask annulus seal is to be pneumatically tested by its manufacturer to verify the seal has no leaks.
3. The transfer cask cavity is to be leak tested using water as the test medium to verify that the bottom cover O-ring seals are leak tight.
4. The annulus vent and drain connections are to be leak tested to verify that the components will perform properly during operations.
5. The bottom cover O-rings are to be inspected prior to installation into the bottom cover O-ring grooves to assure there are no defects that may lead to leakage. The transfer cask bottom cover bolt seals are to be inspected prior to installation to assure there are no defects that may lead to leakage.
6. The transfer cask liquid neutron shield pressure relieving device is to be inspected prior to installation on the neutron shield shell. The set point pressure (if a pressure relief valve is used) is to be verified to be in compliance with the transfer cask design requirements or the device shall be replaced (if a rupture disc is used).
7. The transfer cask external surface finish is to be inspected for compliance with the design requirements to assure that the cask can be easily decontaminated. This requires smooth surfaces on all plates and welds, no re-entrant corners, and good access to all fittings.
8. Proper location of the transfer cask alignment marks is to be verified in accordance with the design requirements to assure proper cask alignment during operations.

9. In addition, fit-up tests are to be performed for the following transfer cask components:
   - Top cover to top flange
   - Ram access cover to top cover
   - Upper trunnions to lifting yoke

Upper and lower trunnions to horizontal transfer skid.

9.1.4 Storage Cask Impact Limiters

The FuelSolutions™ storage cask impact limiter is classified as important to safety. Individual components and assemblies are required to be designed, fabricated, constructed, assembled, inspected, and tested to the quality standards commensurate with the item's graded quality category. The quality categories for important to safety items are identified on the applicable drawings provided in Section 1.5.1.3.

The inspection and testing acceptance criteria applicable to the storage cask impact limiter are listed in Table 9.1-3 and discussed further in the paragraphs that follow. These inspections and tests are intended to demonstrate that the impact limiter has been fabricated, constructed, and examined in accordance with the criteria contained in Section 2.1.2.1 of this FSAR. Pre-operational fit-up tests are intended to demonstrate the storage cask impact limiter interfaces properly with other FuelSolutions™ Storage System components and will perform the intended operational functions as described in Chapter 8 of this FSAR.

9.1.4.1 Visual Inspection and Nondestructive Examination

The inspections to be performed to assure storage cask impact limiter performance include the following:

1. Impact limiter materials of construction and welds will be examined in accordance with the specifications delineated on the general arrangement drawings in Section 1.5.1.3 of this FSAR. Welding and NDE are to be performed in accordance with approved procedures and performed by welding and inspection personnel who are certified in accordance with the code of construction requirements.
2. The impact limiter is to be inspected for compliance with design and code of construction requirements prior to shipment from the fabricator's facility. A complete inspection of all critical dimensions is to be performed.
3. The weights of the impact limiter assemblies are to be determined prior to shipment from the fabricator's facility.
4. A documentation package is to be prepared and maintained during fabrication to include records and evidence that required inspections and tests have been performed and are in compliance with an NRC-approved QA program. Prior to shipment, the impact limiter documentation package is to be reviewed to verify that these components were properly fabricated and inspected in accordance with the design and code of construction requirements.
5. Impact limiter cleanliness will be verified as meeting the criteria specified in ASME NQA-1, Subpart 2.1, Class B, upon completion of fabrication.

6. Impact limiter protection at the completion of fabrication will be verified to be in accordance with the requirements of ASME NQA-1, Subpart 2.2, Level D.
7. Impact limiter protection at the licensee's facility will be verified to be commensurate to the requirements specified for fabrication.

9.1.4.2 Structural

The structural performance of the storage cask impact limiter is assured by verification of the material properties and assembly dimensions. Material compliance is to be demonstrated through receipt inspections to assure that it meets the specified design, code of construction, and procurement requirements.

9.1.4.3 Leak Tests

The storage cask impact limiter does not have any designated leak test requirements (the canister provides for confinement).

9.1.4.4 Criticality Safety

There are no neutron absorber tests required for the FuelSolutions™ W150 Storage Cask Impact Limiter Assemblies.

9.1.4.5 Shielding Integrity

There are no shielding integrity tests required for the storage cask impact limiter.

9.1.4.6 Thermal Acceptance

There are no thermal acceptance tests for the storage cask impact limiter.

9.1.4.7 Components

9.1.4.7.1 Identification Inspections

There are no identification inspections required for the storage cask impact limiter.

9.1.4.7.2 Functional Performance Tests

The functional performance of the storage cask impact limiter is assured by a preoperational fit-up test of the impact limiter assemblies with the horizontal canister transfer area pad depression.

Table 9.1-3 - FuelSolutions™ W150 Storage Cask Impact Limiter Assembly Inspection and Test Acceptance Criteria

Function	Method of Verification		
	Fabrication	Preoperation	Maintenance
Visual Inspection and Nondestructive Examination (NDE)	a) Assembly and examination will be performed per AISC Code. b) Welding and NDE will be per AWS D1.1. c) The weights of the impact limiter assemblies will be determined. d) Cleanliness of the impact limiter assemblies will be verified upon completion of fabrication per NQA-1. e) Protection of the impact limiters at the completion of fabrication will be verified per NQA-1.	a) The impact limiter assemblies will be visually inspected prior to placement in service at the licensee's facility. b) Impact limiter assembly protection at the licensee's facility will be verified.	The impact limiter assemblies will be visually inspected annually.
Structural	a) Verification of materials will be performed and certified material test reports (CMTRs) obtained in accordance with the item's quality category. b) A test pour will be made of the foam during the pour of the impact limiters. c) The foam from the pour test will be tested for compressive strength.	None.	None.
Leak Tests	None.	None.	None
Criticality Safety	None.	None.	None.
Shielding Integrity	None.	None.	None
Thermal Acceptance	None.	None.	None.
Cask Identification Inspection	None.	None.	None.
Functional Performance Tests	None.	Fit-up tests of the impact limiters with their horizontal canister transfer area pad depression will be performed.	None.

This page intentionally left blank.

9.2 Maintenance Program

This section discusses the maintenance programs for FuelSolutions™ Storage System components that are classified as important to safety. Noncompliances encountered during the required maintenance activities will be dispositioned in accordance with the Energy*Solutions* SFD Quality Assurance Program, discussed in Chapter 13 of this FSAR, or the licensee's NRC-approved Quality Assurance Program. The maintenance programs are intended to demonstrate that the FuelSolutions™ Storage System continues to perform properly and comply with regulatory requirements and the *technical specifications* contained in Chapter 12 of this FSAR.

9.2.1 Canisters

The maintenance program for FuelSolutions™ canisters is discussed in Section 9.2 of each FuelSolutions™ Canister Storage FSAR.

9.2.2 Storage Cask

The FuelSolutions™ W150 Storage Cask is a passive system requiring a minimal amount of maintenance. The licensee is to maintain records that include evidence that all maintenance and testing performed on a storage cask is in compliance with an NRC-approved quality assurance program. The maintenance program is summarized in

Table 9.2-1 and discussed in more detail in the paragraphs that follow.

The maintenance program for the FuelSolutions™ W150 Storage Cask, which is applicable for the 100-year design life of the cask, includes the following:

1. After canister loading into the storage cask, dose rate measurements are to be taken to verify compliance with the applicable *technical specification* contained in Section 12.3 of this FSAR. Subsequent periodic radiation surveys are to be performed at the site boundary in accordance with site radiological control procedures and 10CFR72.106(b).[8]
2. The storage cask is periodically monitored, by either visual inspection of the storage cask vent screens or measurement of the storage cask liner temperature via the liner thermocouple, in accordance with the applicable *technical specification* contained in Section 12.3 of the respective FuelSolutions™ canister storage FSAR. Both methods of periodic monitoring allow prompt identification of any ventilation flow obstructions and initiation of corrective actions to restore safe storage conditions.
3. The storage cask temperature monitoring instrumentation is to be checked for proper operation and calibrated at least annually.
4. An annual inspection of the exposed exterior of the storage cask for surface defects (e.g., concrete cracking, spalling, or paint chipping) should also be conducted. Any defects

[8] Title 10, U.S. Code of Federal Regulations, Part 72 (10CFR72), *Licensing Requirements for the Independent Storage of Spent Nuclear Fuel and High-Level Radioactive Waste*, 1995.

identified are to be documented and evaluated. Any repairs are to be performed using an approved procedure.

5. Every five years, the interior surface of the first storage cask placed into service is to be inspected for damage. Inspections may be by direct or indirect visual methods. Any defects identified are to be documented and evaluated. Any repairs are to be performed using an approved procedure.
6. If the storage cask is to be re-used following canister unloading and storage cask disassembly, the following inspections are to be performed prior to re-assembly:
   - The condition of the components, including the concrete segments, tie-rods, thermal shield, cover, etc., is to be inspected for the presence of any damage or defects.
   - Removal of the grout layer between segments is to be verified.
   - Cleanliness of the lifting coupling threads at the tie-rod sleeves for each concrete segment is to be verified.
   - The tie-rod and nut threads are to be inspected to verify that they are in good condition and not galled. Any defective component is to be repaired or replaced.
   - The storage cask is to be inspected to verify that no debris is present in the cavity, inlet vents, or outlet vents.

Table 9.2-1 - Maintenance Program for the FuelSolutions™ W150 Storage Cask

Maintenance Program		
Inspection	**Tests**	**Repair, Replacement, and Maintenance**
a) The storage cask concrete will be inspected annually in accordance with site-specific procedures to determine if damage has occurred. b) The vent screens will be visually inspected periodically to determine that they are in place and are in good condition. c) The temperature monitoring system will be read periodically. Any indication of malfunctioning will be evaluated. d) Radiation readings from the storage casks are read per the *technical specification*.	a) The temperature readout system will be tested and calibrated at least annually or more often if prescribed by a site-specific procedure.	a) If damage has occurred in the form of chipping or spalling of the concrete that exposes the rebar within, then the damaged area will be repaired with grout, as prescribed in the site-specific procedure. b) If significant damage to the storage cask vent screens (as described in the site-specific procedure) is observed, then the damaged screen will be repaired or replaced. c) If the temperature readout system for a storage cask is found to be malfunctioning, then it will be repaired or replaced, as prescribed in a site-specific procedure. d) If radiation readings exceed *technical specification* limits, the action steps outlined in the *technical specification* may require erecting temporary shielding.

9.2.3 Transfer Cask

The FuelSolutions™ W100 Transfer Cask is used for loading each canister into a storage cask and requires only a limited amount of periodic maintenance to properly perform its intended functions. The licensee is to maintain records that include evidence that all maintenance and testing performed on the transfer cask is in compliance with an NRC-approved quality assurance program. The maintenance program is summarized in Table 9.2-2 and discussed in more detail in the paragraphs that follow.

The maintenance program for the FuelSolutions™ W100 Transfer Cask, which is applicable for the 40-year design life of the cask, includes the following:

1. The transfer cask is to be visually inspected for any apparent defects prior to each use. This inspection is to evaluate the condition of the cask relative to sealing surfaces, interior surface condition and cleanliness, visual integrity of welds, damage to the trunnions, and general fit-up of the components. A surface contamination survey is to be made of the transfer cask interior.
2. Prior to each use, the liquid neutron shield pressure relief device is to be inspected and replaced as necessary. The replacement of this device should be performed in accordance with a site-specific procedure.
3. Prior to each use, the bottom cover O-rings and bolt seals are to be inspected for any defects that may result in leakage and replaced as necessary. The replacement of the O-rings or any of the bolts are to be performed in accordance with a site-specific procedure.
4. Following canister loading, dose rate measurements are to be taken to verify compliance with plant-specific procedures and ALARA requirements (discussed in Section 10.1.3 of this FSAR). Radiation surveys are to be performed during each canister transfer operation to assure occupational exposures are maintained ALARA.
5. Annually, the transfer cask is to be inspected for defects in accessible materials (including the neutron shield coating system) and welds, including the trunnion locations. Critical trunnion areas and accessible trunnion load bearing welds are to be dye penetrant tested or examined with an equivalent non-destructive examination method. Any defects identified are to be dispositioned using an approved procedure. Visual inspections of the cask trunnions are to be in accordance with ANSI N14.6 to verify that no permanent deformation has occurred since the last inspection. Load testing of the transfer cask trunnions is not required.
6. Annually, the functionality of all transfer cask threaded components and quick-connect fittings is to be verified.
7. Annually, the liquid neutron shield is to be filled and leak tested. Any leaks are to be repaired using an approved procedure.
8. Prior to each use, proper lubrication of all transfer cask threaded connections is to be verified. Transfer cask threaded connections are to be lubricated with a lubricant approved for use at the designated plant site.
9. Prior to each use, the transfer cask quick-connect fittings are to be inspected to verify no damage or defects and to assure proper operation.

9.2.4 Storage Cask Impact Limiter

Per-use and annual inspections of the FuelSolutions™ storage cask impact limiter include visual inspection for any apparent defects, the visual integrity of welds, the general condition of the impact limiter, and its fit-up with the horizontal canister transfer area pad depression. When not in use, the impact limiter will be disassembled and placed in storage for protection from degradation.

Table 9.2-2 - Maintenance Program for the FuelSolutions™ W100 Transfer Cask

Maintenance Program		
Inspection	**Tests**	**Repair, Replacement, and Maintenance**
a) A general visual inspection will occur prior to each use. b) Inspection of the neutron shield pressure relief device will occur prior to use. c) Bolts and O-rings used on the bottom cover will be inspected before each use. d) Quick-connect fittings will be inspected prior to each use. e) Critical trunnion areas and accessible trunnion load bearing welds will be dye penetrant inspected on an annual basis.	a) The neutron shield cavity will be leak tested annually. b) The neutron shield cavity pressure relief device will be tested/replaced annually.	a) Repairs will be made to correct any defects found during the pre-use inspection or annual inspections. b) Replacement of parts or components will be of the same quality designation as the original. c) Threaded connections will be lubricated prior to use.

9.3 First Cask In Use Requirements

This section presents requirements for the first FuelSolutions™ W150 Storage Cask loaded, for each different FuelSolutions™ canister design, to measure its heat removal and to establish baseline data.

The first FuelSolutions™ storage cask used with each FuelSolutions™ canister design (i.e., W21, W74, etc.) is to be loaded with the maximum number of SNF assemblies with the maximum allowable heat load permitted for that canister design. The temperature indicated by the storage cask side wall thermocouple is to be compared to ambient outside air temperatures to measure the heat removal performance of the FuelSolutions™ system and to establish baseline data.

If the first user of a FuelSolutions™ W150 Storage Cask, for each different FuelSolutions™ canister design, does not have SNF assemblies capable of producing the canister design maximum allowable heat load, a lesser heat load may be used for the test, provided that a calculation of the temperature difference between the storage cask side wall thermocouple reading and the ambient outside air temperature is performed. This calculation is to use the same methodology and inputs documented in the applicable FuelSolutions™ Canister Storage FSAR, with the lesser heat load as the only exception. The calculation and the measured temperature data are to be reported to the NRC in accordance with 10CFR72.4.

An artificial heat source other than SNF assemblies may be used to satisfy the above requirements.

This page intentionally left blank.

10. RADIATION PROTECTION

This chapter discusses the design considerations and operational features that are incorporated into the FuelSolutions™ Storage System design to protect plant personnel and the public from exposure to radioactive contamination and ionizing radiation during canister loading, closure, transfer, and on-site dry storage. Occupational exposure estimates for typical canister loading, closure, transfer operations, and ISFSI inspections are provided. An off-site dose assessment for a sample ISFSI using the FuelSolutions™ Storage System is also provided. Since the determination of off-site dose rates is necessarily fuel- and site-specific, similar dose assessments are to be prepared by the licensee, as part of implementing the FuelSolutions™ Storage System in accordance with 10CFR72.212.[1]

[1] Title 10, U.S. Code of Federal Regulations, Part 72 (10CFR72), *Licensing Requirements for the Independent Storage of Spent Nuclear Fuel and High-Level Radioactive Waste*, 1995.

This page intentionally left blank.

10.1 Ensuring that Occupational Radiation Exposures Are As Low As Is Reasonably Achievable (ALARA)

10.1.1 Policy Considerations

The FuelSolutions™ Storage System is designed to assure that radiation exposures are maintained ALARA consistent with the policies established by the applicable federal regulations for radiation protection,[2] and the guidance provided in Regulatory Guide 8.8[3] and Regulatory Guide 8.10.[4]

The features incorporated into the FuelSolutions™ Storage System design and operations, described herein, assure the lowest achievable off-site (public) exposure rates, and on-site personnel (occupational) exposure rates for system operations, inspection, repair, and maintenance activities associated with an ISFSI using the FuelSolutions™ Storage System.

The FuelSolutions™ Storage System is designed to minimize the quantity of radioactive waste generated. There are no radioactive waste streams for normal storage operations, and SNF loading and unloading operations produce only a minimal amount of low level radwaste because the amount of coatings and consumables has been minimized.

10.1.2 Design Considerations

Consistent with the design criteria defined in Section 2.1.2 of this FSAR, the radiological protection criteria that limit exposure to radioactive effluents and direct radiation from an ISFSI using the FuelSolutions™ Storage System are as follows:

1. 10CFR72.104 requires that for normal operation and anticipated occurrences, the annual dose equivalent to any real individual located beyond the owner-controlled area boundary must not exceed 25 mrem to the whole body, 75 mrem to the thyroid, and 25 mrem to any other organ. This dose would be a result of planned discharges, direct radiation from the ISFSI, and any other radiation from uranium fuel cycle operations in the area. The licensee is responsible for demonstrating site-specific compliance with these requirements.
2. 10CFR72.106 requires that any individual located on or beyond the nearest owner-controlled area boundary must not receive a total effective dose equivalent greater than 5 rem, or the sum of the deep dose equivalent and the committed dose equivalent to any organ or tissue (other than the lens of the eye) of 50 rem. The lens dose equivalent shall not exceed 15 rem and the shallow dose equivalent to skin or to any extremity shall not exceed 50 rem a design basis accident. The licensee is responsible for demonstrating site-specific compliance with this requirement consistent with the evaluation provided in Section 7.1 of this FSAR.

---

[2]Title 10, U.S. Code of Federal Regulations, Part 20 (10CFR20), *Standards for Protection Against Radiation*, 1995.

[3] Regulatory Guide 8.8, *Information Relevant to Ensuring That Occupational Radiation Exposures at Nuclear Power Stations Will Be As Low As Is Reasonably Achievable (ALARA),* U.S. Nuclear Regulatory Commission, June 1978.

[4] Regulatory Guide 8.10, *Operating Philosophy for Maintaining Occupational Radiation Exposures As Low As Is Reasonably Achievable,* U.S. Nuclear Regulatory Commission, May 1977.

3. 10CFR20, Subpart C, limits occupational exposures to a total annual effective dose equivalent of 5 rem. The licensee is responsible for demonstrating site-specific compliance with this requirement.
4. Regulatory Position 2 of Regulatory Guide 8.8 provides guidance regarding facility and equipment design features. This guidance has been followed in the design of the FuelSolutions™ Storage System as described below:

- Regulatory Position 2a, regarding access control, is met by surrounding an ISFSI with a fence with a locked gate. Depending on the site-specific ISFSI design, other equivalent measures may be used. Unauthorized access is prevented once a loaded FuelSolutions™ canister is placed in an ISFSI. Due to the nature of the system, only limited monitoring is required, thus reducing occupational exposure. The licensee is responsible for site-specific compliance with these criteria.
- Regulatory Position 2b, regarding radiation shielding, is met by the storage cask and transfer cask biological shielding that minimizes personnel exposure, as respectively described in Sections 1.2.1.1 and 1.2.1.2 of this FSAR. This includes features such as:

<u>*Storage Cask*</u>

- Nominal wall thickness for the storage cask is 32.5 inches. Of this, 2.0 inches are the steel cask liner with the remainder being reinforced concrete.
- A shielded docking collar is used to prevent radiation streaming when a loaded canister is transferred to/from a storage cask.
- Temporary outlet vent shield blocks may be installed whenever a canister is transferred to/from the storage cask.
- Convective cooling air is discharged high on the storage cask wall, near its top end.

<u>*Transfer Cask*</u>

- The transfer cask consists of a steel inner liner and outer structural shell steel liner with lead sandwiched in between.
- A water-filled neutron shield is provided on the transfer cask exterior.
- Shielded covers are used on both ends of the cask.

- Regulatory Position 2c, regarding process instrumentation and controls, is met since there are no radioactive systems at an ISFSI. No process controls are required for a FuelSolutions™ ISFSI.
- Regulatory Position 2d, regarding control of airborne contaminants, is met since the FuelSolutions™ Storage System is designed to withstand all design basis conditions without loss of confinement function, as described in Chapter 7 of this FSAR, and no gaseous releases are anticipated. No significant surface contamination is expected since the exterior of the FuelSolutions™ canisters are kept clean by using clean water in the transfer cask-canister annulus and by using an inflatable annulus seal. It is recommended that a positive head tank be connected to the annulus cavity during operations in the spent fuel pool, as described in Section 1.2.1.4.1 of this FSAR. The *technical specification*

contained in Section 12.3 requires verification that accessible canister non-fixed surface contamination levels are within acceptable values prior to transfer to the storage cask.

- Regulatory Position 2e, regarding CRUD control, is not applicable to a FuelSolutions™ ISFSI since there are no radioactive systems at an ISFSI that could transport CRUD.
- Regulatory Position 2f, regarding decontamination, is met since the exterior of the loaded transfer cask is decontaminated prior to being removed from the plant's fuel building. The exterior surface of the transfer cask is highly polished stainless steel for ease of decontamination. In addition, an inflatable annulus seal is used to prevent fuel pool water from contacting and contaminating the exterior surface of the canister.
- Regulatory Position 2g, regarding monitoring of airborne radioactivity, is met since the FuelSolutions™ canister provides confinement for all design basis conditions. There is no need for monitoring since no airborne radioactivity is anticipated at a FuelSolutions™ ISFSI. Area radiation monitors are not required since the ISFSI is not normally occupied. Thermoluminescent dosimeters (TLDs), or other similar devices, placed on the ISFSI fence are typically used to monitor direct radiation. Portable survey meters are normally used to monitor transfer cask and storage cask dose rates during operations and maintenance activities. Personnel dosimetry is used within an ISFSI when SNF is in storage, based on 10CFR20 requirements.
- Regulatory Position 2h, regarding resin treatment systems, is not applicable to a FuelSolutions™ ISFSI since there are no treatment systems containing radioactive resins.
- Regulatory Position 2i, regarding other miscellaneous ALARA items, is met since stainless steel is used in the storage canister shell, the primary confinement boundary. This material is radiation damage resistant and is well proven in the SNF cask service. Use of this material quantitatively reduces or eliminates the need to perform maintenance (or replacement) on the primary containment system.

All components of the FuelSolutions™ Storage System take full advantage of the design, licensing, fabrication, and operational experience gained by the Energy*Solutions* Spent Fuel Division, Inc. (Energy*Solutions* SFD) FuelSolutions™ SFMS team at similar installations, as described in Section 1.3 of this FSAR.

10.1.3 Operational Considerations

The FuelSolutions™ Storage System operations described in Section 1.2.2 and Chapter 8 of this FSAR have been established to assure that occupational exposures are maintained ALARA. Since the FuelSolutions™ storage cask and canister are passive components designed to be maintenance free for the intended service environment, periodic maintenance on the storage casks and canisters is alleviated, as discussed in Section 9.2. Periodic inspections of the air inlet and outlet vents is accomplished visually by walkdown between the cask rows or remote video. No physical contact with the storage cask vents is required. Temperature monitoring may be performed by reading storage cask thermocouple outputs individually, in groups, or remotely as desired by the licensee. None of these record keeping options require operations to be performed near the storage cask vent penetrations, which have locally higher dose rates compared with the through-wall dose rates.

Maintenance, inspection, and repair operations on the FuelSolutions™ support equipment described in Section 1.2.1.4 are performed in a very low ambient dose environment during periods when canister loading is not occurring. In the event of equipment malfunction during use, no repair activities are anticipated to be performed in high radiation areas since the active mechanical and electrical devices can be removed from the area for repair.

The FuelSolutions™ canisters are fabricated with mild stainless steel shells and closure plates. The inner and outer closure plates are shop-fitted to the shell onto which they are to be installed, resulting in minimal welding gaps. This eliminates the need for hands-on fitting of wedges or shims prior to start of welding. Welds of the stainless steel closure plates to the shell, performed with an unrestrained uniform gap, reduce the potential for cracking of the weld or tearing of the base metal. In addition, the canister closure welds are placed using remote automatic welding equipment, which improves the quality of the weld and reduces the likelihood of weld defects requiring repair. As a result, little or no unplanned personnel exposure for fit-up and weld repair during canister sealing is anticipated. The details of each FuelSolutions™ canister design are provided in Section 1.2.1 of the respective FuelSolutions™ Canister Storage FSAR. Additional information on the FuelSolutions™ canister closure is provided in Section 2.5.2 of each FuelSolutions™ Canister Storage FSAR.

10.1.3.1 FuelSolutions™ Storage Cask

Representative dose rates for the FuelSolutions™ Storage Cask are given in Table 5.1-1 of this FSAR. Operational planning and actions should be taken by each licensee to minimize personnel radiation exposures during work around the loaded storage casks. Careful consideration toward keeping such exposures ALARA should be included in work/job planning, training, and task execution. Such decisions, made by the licensee, should consider the following:

Time

Site-specific procedures should be efficiently planned and structured to minimize the amount of time required for personnel to be in the ISFSI storage pad area and to perform canister transfer operations. Personnel should enter the ISFSI only when required.

Components and equipment needed to accomplish canister transfer operations should be pre-staged in low dose areas to the maximum extent practicable. Equipment should be well maintained to avoid the need for equipment repairs during operations.

Training and dry runs should be conducted in low dose conditions prior to initiating operations to assure the time and number of personnel required to complete dose related operations is minimized. Personnel should be trained and have a demonstrated proficiency in conducting operations involving the storage cask.

When personnel enter the ISFSI to take required readings or perform surveillances, the methodology for performing work activities should be structured to minimize the time duration. Temperature readings and visual observations of the storage cask vents should be taken at the same time to minimize personnel entries. Optical devices, such as mirrors, periscopes, or cameras on extensions, should be used to inspect the upper vents to avoid the time required to set up a ladder or other apparatus.

The use of remote sensing and automated recording devices is encouraged for storage cask monitoring and surveillance activities. Temperature readouts can be taken remotely and recorded at a location removed from the ISFSI using standard available equipment and technology. The use of suitable remotely operated viewing equipment may be used by the licensee to facilitate storage cask vent surveillances. This would minimize or preclude the need for personnel to enter the ISFSI pad area.

Distance

To the maximum extent practicable, site-specific procedures should incorporate the use of long handled tools and instruments to perform canister transfer operations and other operations in the ISFSI storage pad area. Casual participation of personnel in dose related operations should be discouraged. Personnel should enter the ISFSI only when required.

Entry to work areas for dose related canister transfer operations should be controlled by health physics personnel.

When siting an ISFSI, careful consideration should be given to the proximity of site personnel and members of the public. Fencing and other physical barriers should be used to prevent personnel and the public from approaching the ISFSI.

The use of remote sensing and automated recording devices, as discussed in the paragraphs above, will lower the dose received by personnel. The use of mirrors, periscopes, or cameras mounted on extensions to inspect the outlet vents minimizes exposure to the locally higher dose fields at the outlet vents.

Shielding

Site-specific procedures and ISFSI designs should incorporate the use of auxiliary shielding if needed and prudent. Temporary shielding should be used during canister transfer operations to further attenuate doses and minimize exposures to personnel and members of the public.

When planning canister fuel loadings, consideration should be given to the relative radiological source strengths of the fuel assemblies to be loaded. In addition, attention should be given to fuel assemblies suspected of having high end fitting activation. Storage cask surface doses will be reduced if fuel assemblies with lower source strengths are placed on the perimeter of the canister to maximize self-shielding effects within the canister.

Judicious use of temporary shielding is encouraged during canister transfer operations. Such shielding should be pre-planned and designed for ease of placement and to maximize effectiveness.

Auxiliary shielding can be added at the ISFSI to further reduce exposures to personnel and/or the general public. The use of earthen berms around the ISFSI pad will reduce doses away from the ISFSI. Such berms also reduce exposures to on-site plant personnel who work or travel near the ISFSI. When siting an ISFSI, consideration should be given to the local topography to take advantage of natural shielding effects of the surroundings.

If engineered features such as shield walls or earthen berms are used by the licensee to ensure compliance with the ISFSI dose rate requirements of 10CFR72.104 and/or 10CFR72.106, then these features must be considered important to safety and must be evaluated to determine the applicable Quality Assurance Category.

The licensee should also utilize the shielding attributes of the FuelSolutions™ concrete storage cask when planning placement on the ISFSI pad. Storage casks with the highest external dose rates should be positioned nearest the center of the storage cask array. Storage casks with the lowest external dose rates should be positioned on the perimeter of the storage cask array. This cask positioning provides the minimum radiological dose for a given storage cask array.

10.1.3.2 FuelSolutions™ Transfer Cask

Representative dose rates for the FuelSolutions™ Transfer Cask are given in Table 5.1.2 of this FSAR. Operational planning and action should be taken to minimize personnel radiation exposure during use of the transfer cask for canister fuel loading, closure, and transfer operations. The operations related to canister closure may involve working in significant dose fields. Operational planning and actions should be taken to minimize personnel radiation exposure during canister closure operations. To achieve ALARA, the licensee should use some or all of the following to keep exposures to a minimum while work is being performed around a loaded canister or a loaded transfer cask.

Time

Site-specific procedures should be efficiently planned and structured to minimize the amount of time required for personnel to perform canister fuel loading, closure, and transfer operations. Personnel should enter radiation exposure work areas only when required.

Components and equipment needed to accomplish canister fuel loading, closure, and transfer operations should be pre-staged in low dose areas to the maximum extent practicable. Equipment should be well maintained to avoid the need for equipment repairs during operations.

Training and dry runs should be conducted in low dose conditions prior to initiation of operations to assure the time and number or personnel required to complete dose related operations is minimized. Personnel should be trained and have a demonstrated proficiency in conducting operations involving the transfer cask. Health physicists or radiological control technicians should monitor all loaded transfer cask operations and should restrict and control stay times for operations that are dose intensive. Proper performance of the welding activities is essential to avoid the time and dose intensive effort of grinding out welds that fail non-destructive examination and testing.

The amount of stay time allowed at the top end of the canister should be set and controlled by the cognizant health physicists assigned to monitor the work. Procedures should be established that define the work chronologically and in a smooth and efficient manner. Remote readout dosimeters, if available, should be used during longer work iterations to assist the health physics personnel to control worker exposures.

Health physicists or radiological control technicians should monitor all canister closure operations and should restrict and control stay times for operations that are dose intensive.

Distance

To the maximum extent practicable, site-specific procedures should incorporate the use of long handled tools and instruments to perform canister fuel loading, closure, and transfer operations. Casual participation of personnel in dose related operations should be discouraged. Personnel should enter such work areas only when required.

All non-essential personnel should be restricted from the proximity of the loaded transfer cask by use of radiological barriers or ribbons. Likewise, operations personnel should move to an area of lower radiological dose during idle times. The cognizant health physics personnel should establish and designate such an area during transfer cask operational activities.

Personnel should be restricted to a prescribed distance during on-site transport operations and during canister transfer operations between the transfer cask, the storage cask, and the shipping cask.

Shielding

Site-specific procedures should incorporate the prudent use of temporary shielding during canister closure and transfer operations to further attenuate doses and minimize exposures to personnel. Careful consideration to the sequence of canister closure operations should be given to maintaining water in the canister cavity, cask/canister annulus and the transfer cask neutron shield whenever possible.

When planning canister fuel loadings, consideration should be given to the relative radiological source strengths of the fuel assemblies to be loaded. In addition, attention should be given to fuel assemblies suspected of having high end fitting activation. Transfer cask surface doses will be reduced if fuel assemblies with lower source strengths are placed on the perimeter of the canister to maximize self-shielding effects within the canister.

Judicious use of temporary shielding is encouraged during canister closure operations. Such shielding should be pre-planned and designed for ease of placement and to maximize effectiveness. Temporary/portable shielding material such as lead blankets and “lead snakes” should be used whenever feasible to shield workers from radiation. For example, a lead snake can be used to simultaneously preclude weld splatter and debris from entering the annulus space between the transfer cask and the canister and to protect workers from radiation that might be “shining” from the annular area of the transfer cask. Whenever possible, careful consideration should be given to the sequence of canister closure operations to maintain water in the canister cavity, cask/canister annulus, and the transfer cask neutron shield. Performing the dye penetrant examination of the closure welds while the canister and cask/canister annulus is filled with water reduces personnel exposure significantly.

This page intentionally left blank.

10.2 Radiation Protection Design Features

10.2.1 FuelSolutions™ Canisters

The FuelSolutions™ canisters provide radiation protection in two ways. First, they provide the primary confinement for all radioactive materials, as described in Section 7.1 of each FuelSolutions™ Canister Storage FSAR. Second, they provide axial shielding with thick shield plugs on both ends of the canister, as described in Section 1.2.1 of each FuelSolutions™ Canister Storage FSAR.

The FuelSolutions™ canister cylindrical shell, bottom end (inner and outer) closure plates, and top end (inner and outer) closure plates comprise the confinement boundary. The canister confinement boundary is made of stainless steel and is designed, fabricated, and tested in accordance with applicable requirements of ASME Section III, Subsection NB,[5] as defined in Section 2.1.2 of each FuelSolutions™ Canister Storage FSAR.

FuelSolutions™ canisters have no bolted closures or mechanical seals. There are no penetrations for pressure monitoring, since such penetrations would increase the probability of developing a potential leakage path. The ductile stainless steel material is not susceptible to lamilar tearing or hydrogen under-bead cracking as discussed in Section 2.5.2 of each FuelSolutions™ Canister Storage FSAR. The redundant closure welds on the two plates in series at each end of the canister assure that failure of any one of these canister confinement welds does not result in release of radioactive material to the environment. Section 7.1 of each FuelSolutions™ Canister Storage FSAR contains a complete evaluation of the canister confinement boundary design.

10.2.2 FuelSolutions™ Storage Cask

The FuelSolutions™ W150 Storage Cask, described in Section 1.2.1.1 of this FSAR, provides the following major biological shielding features during canister dry storage:

- Radial shielding is provided by a heavy steel inner liner and thick reinforced concrete wall segments.
- A shear key is provided between the three concrete segments to provide positive lateral engagement and alignment, and to minimize radiation streaming.
- A steel and concrete top cover provides shielding, in addition to that of a canister's top shield plug, to reduce air-scattered dose rates off-site and occupational exposures on-site.
- The steel-lined reinforced concrete cask bottom provides axial shielding, in addition to that of the canister's bottom shield plug, during horizontal canister transfer operations.
- Air flow penetrations are designed to minimize radiation streaming by using offset vent ducts. In addition, the inlet vents are located adjacent to the canister bottom shield plug, and the outlet vents are adjacent to the canister top shield plug, not adjacent to activated hardware or SNF rods. At the licensee's discretion, optional temporary shield blocks may be

[5] American Society of Mechanical Engineers (ASME), Boiler and Pressure Vessel Code, Section III, Division 1, Subsection NB, *Class 1 Vessels*, 1995 Edition.

installed in the outlet vents during canister transfer operations to further reduce occupational exposures.

- Canister transfer to a shipping cask for off-site transport may be performed directly to avoid extra handling operations and the associated occupational exposure.
- The inlet and outlet vents are screened with stainless steel to reduce maintenance and to provide a readily visible surface for performing periodic inspections remotely, thereby saving time and reducing occupational exposure.
- During canister horizontal and vertical transfer operations with the FuelSolutions™ transfer cask, a shielded docking collar is installed on the storage cask. This docking collar provides shielding to maintain occupational exposures ALARA.
- The top flange of the storage cask includes a steel shielding ring to minimize radiation streaming from the annulus between the canister and storage cask.

The storage cask shielding design features discussed above result in dose rates in the immediate vicinity of the storage pad to less than 10 mrem/hour, as shown in Section 10.3.

10.2.3 FuelSolutions™ Transfer Cask

The FuelSolutions™ W100 Transfer Cask described in Section 1.2.1.2 of this FSAR, provides the following major biological shielding and contamination control features during canister loading, closure, and transfer operations:

- The transfer cask incorporates steel and lead radial gamma shielding. Axial gamma shielding is provided by a combination of the steel cask covers and the canister shield plugs.
- The transfer cask neutron shielding is provided by a radial liquid-filled neutron shield jacket and by solid neutron shielding built into the top and bottom covers.
- A ram access cover plate is provided to reduce exposures from the canister top end during canister transfer.
- Contamination of the transfer cask cavity and canister outer surfaces is controlled in five ways. First, there is an O-ring seal on the bottom cover plate to prevent contamination through the bottom mating surface. Second, the cask canister annulus is filled with clean water prior to canister loading. Third, an inflatable seal is placed at the top end of the cask-canister annulus prior to immersion in a spent fuel pool to prevent ingress of contaminated water through the top. Fourth, a static head tank may be used to maintain a positive pressure on the annulus in the unlikely event of a seal or O-ring leak. And, fifth, prior to placement in dry storage, accessible portions of the canister outer surface are swiped for loose contamination to verify compliance.
- Temporary retainers are used when removing the transfer cask from the spent fuel pool, so that in the unlikely event of an accidental drop, the canister and shield plug are retained in the transfer cask.
- A drainable neutron shield provides a means to meet the 100-ton crane hook capacity at some plants, while still providing maximum neutron shielding after the canister is drained (i.e., in

the cask decontamination pit). Plants with sufficient crane hook capacity need not drain the neutron shield during canister loading operations.

- The transfer cask neutron shield jacket is painted with a decontaminable coating. The remaining surfaces of the transfer cask exterior (including the top and bottom covers, top and bottom forgings, and the upper and lower trunnions) are polished stainless steel to facilitate decontamination. The cask is also designed to minimize CRUD traps.
- Alignment pins on the top and bottom cask covers reduce operational time and occupational exposure.

This page intentionally left blank.

10.3 Estimated On-Site Collective Dose Assessment

This section provides an estimate of the cumulative occupational radiation exposure to personnel performing the operations associated with the FuelSolutions™ Storage System.

The shielding analysis presented in Chapter 5 of this FSAR demonstrates that the FuelSolutions™ W150 Storage Cask and W100 Transfer Cask dose rates are maintained within the design basis acceptance values. Chapter 5 of each FuelSolutions™ Canister Storage FSAR demonstrates that the total integrated gamma and neutron sources for the acceptable canister payloads (defined in Section 2.2 of each FuelSolutions™ Canister Storage FSAR), for a range of enrichment and burnup combinations, are bounded by those that result in dose rates equal to the design basis acceptance values. This forms the basis for the fuel cooling tables contained in Section 5.2 of the respective FuelSolutions™ canister storage FSAR, which also assures that occupational exposures are maintained ALARA.

Chapter 8 of this FSAR provides the operating procedures for loading and unloading; closure; transfer; and storage operations for a typical FuelSolutions™ canister. The dose assessment in this section is valid for typical FuelSolutions™ canisters, and all similar canister designs based on dose-rates and operational steps. Any unique operating procedures for loading of a FuelSolutions™ canister that differ from those provided in Chapter 8 of this FSAR, are identified in Chapter 8 of the respective FuelSolutions™ Canister Storage FSAR. Any unique occupational exposure estimates are addressed in Section 10.3 of the respective FuelSolutions™ Canister Storage FSAR.

Using dose rates corresponding to bounding fuel, the occupational exposure estimates provided in this section are based on the estimated time durations and number of personnel required to complete the operational tasks identified in the operating procedures contained in Chapter 8 of this FSAR. The characteristics of the bounding SNF used to determine the dose rates in this assessment are discussed in Chapter 5 of this FSAR.

The cumulative occupational exposure estimates for the sequence of operations required to place SNF assemblies into dry storage using the FuelSolutions™ Storage System are provided in Table 10.3-1 and Table 10.3-2 for vertical and horizontal canister transfer, respectively. Exposure estimates for SNF unloading are provided in Table 10.3-3 and Table 10.3-4 for vertical and horizontal canister transfer, respectively.

Once SNF is placed in storage, regular periodic inspections are performed on the ISFSI as discussed in Section 9.2 of this FSAR. The primary purpose of such inspections is to assure that all the storage casks on the ISFSI pad are free of any inlet or outlet vent blockage or damage that may cause the temperatures to exceed the applicable limits. The resulting occupational exposure estimate for such inspections are estimated below. These estimates are based upon a sample 64 cask (8x8 array) ISFSI filled with typical (or representative) fuel. This is the same design basis that is used in the off-site dose calculations presented in Section 10.4.

A typical dose rate of ~5 mrem/hour is assumed for an inspector performing a visual inspection of the loaded storage casks on the ISFSI pad. A brief visual inspection of each storage cask in a 64 cask ISFSI is assumed to take about 15 minutes for a single inspector. An exposure to 5 mrem/hour over a 0.25-hour inspection period yields a total inspection dose of 1.25 mrem. If

visual inspections are performed at the most frequent surveillance interval required (daily), the total annual exposure from this activity would be 457 mrem.

If blockage of an inlet or inlet vent screen is detected, the blockage must be removed manually or by mechanical means. The calculated dose rate at the entrance to the inlet vent is ~10 mrem/hour (typical case). The dose rate seen by a worker working with appropriate tools to remove a vent blockage will be less than this value. Removal of a credible blockage should take no more than five minutes. An exposure of 10 mrem/hour over a five-minute period corresponds to an overall exposure of under 1 mrem for each inlet vent blockage removal operation. Since most of the worker's body is removed from the vent opening during this operation, the actual dose received is significantly less than 1 mrem, and will be less than 1 mrem even for a storage cask loaded with bounding fuel (which has an inlet vent surface dose rate of 32 mrem/hour).

At some ISFSI sites, snow will periodically have to be removed from the proximity of the storage cask inlet vents. It is estimated that this task will take two workers about one hour for the sample (64 cask) ISFSI. While performing snow removal, the workers are exposed to the ~10 mrem/hour ISFSI interior dose rate discussed above. A higher effective dose is chosen for this operation than the inspection operation because more work will be done nearer to the storage cask for snow removal. This is estimated to result in an overall exposure of 20 mrem for one snow removal operation. Assuming that ten such operations are required per year, the overall annual personnel exposure for snow removal will be 200 mrem.

Combining the ISFSI inspection and snow removal exposure levels results in an overall annual ISFSI maintenance personnel exposure of under 1 rem/year.

Table 10.3-1 - Estimated Cumulative Occupational Exposure for Placing Fuel into Dry Storage Using Vertical Canister Transfer

Ch. 8 Sequence Number	Description	Primary Source	W100 Configuration									Effective				"Typical" Person-mrem	"Bounding" Person-mrem
			Wet?			Installed?											
			Canister Cavity	Annulus	Cask Neutron Shield	Inner Closure Plate	Outer Closure Plate	Welder	Cask Top Cover	Ram Access Cover	Cask Bottom Cover	Time in Field (hours)	Number of Personnel	"Typical" Dose Rate (mrem/hr)	"Bounding" Dose Rate (mrem/hr)		
Prepare for Fuel Loading																	
various	Prepare/Stage Transfer Cask and Canister	ambient										8	4	0.1	0.1	3	3
Load Canister																	
8.1.1	Stage Canister and Transfer Cask	ambient										4	6	0.1	0.1	2	2
8.1.2	Insert Canister into Transfer Cask	ambient										2	4	0.1	0.1	1	1
8.1.3	Place Canister and Transfer Cask into Pool	pool										1	6	1	1	6	6
8.1.4	Load Fuel into Canister	pool										8	2	1	1	16	16
8.1.5	Remove Loaded Cask/Canister from Fuel Pool	W100	3	3	3						3	1	6	5	25	30	150
8.1.6	Decontaminate Cask Exterior	W100	3	3	3						3	2	2	57.2	219	229	876
8.1.7	Install Canister Inner Closure Plate	W100	3	3	3	3		3			3	1	1	24.9	101	25	101
8.1.8	Drain and Backfill Canister with Helium	W100		3	3	3		3			3	0.25	1	67.5	289	17	72
8.1.9	Install Canister Outer Closure Plate	W100		3	3	3	3	3			3	1	1	26.2	161	26	161
Vertical Canister Transfer																	
8.3.2.2	Preparation for Vertical Canister Transfer	none														0	0
8.1.11.1	Prepare Transfer Cask and Canister	W100			3	3	3				3	1	2	26.2	161	52	322
8.1.11.2	Move Transfer Cask to the Storage Cask	W100			3	3	3					0.5	4	20	100	40	200
8.1.11.3	Insert Canister into Storage Cask	W100			3	3	3					0.5	4	20	100	40	200
Move to ISFSI																	
8.1.11.4	Tow Storage Cask to ISFSI	W150										1	2	5	25	10	50
Total																**498**	**2161**

Table 10.3-2 - Estimated Cumulative Occupational Exposure for Placing Fuel into Dry Storage Using Horizontal Canister Transfer

Ch. 8 Sequence Number	Description	Primary Source	W100 Configuration									Effective				"Typical" Person-mrem	"Bounding" Person-mrem
			Wet?			Installed?											
			Canister Cavity	Annulus	Cask Neutron Shield	Inner Closure Plate	Outer Closure Plate	Welder	Cask Top Cover	Ram Access Cover	Cask Bottom Cover	Time in Field (hours)	Number of Personnel	"Typical" Dose Rate (mrem/hr)	"Bounding" Dose Rate (mrem/hr)		
Prepare for Fuel Loading																	
various	Prepare/Stage Transfer Cask and Canister	ambient										8	4	0.1	0.1	3	3
Load Canister																	
8.1.1	Stage Canister and Transfer Cask	ambient										4	6	0.1	0.1	2	2
8.1.2	Insert Canister into Transfer Cask	ambient										2	4	0.1	0.1	1	1
8.1.3	Place Canister and Transfer Cask into Fuel Pool	pool										1	6	1	1	6	6
8.1.4	Load Fuel into Canister	pool										8	2	1	1	16	16
8.1.5	Remove Loaded Cask/Canister from Fuel Pool	W100	3	3	3						3	1	6	5	25	30	150
8.1.6	Decontaminate Cask Exterior	W100	3	3	3						3	2	2	57.2	219	229	876
8.1.7	Install Canister Inner Closure Plate	W100	3	3	3	3		3			3	1	1	24.9	101	25	101
8.1.8	Drain and Backfill Canister with Helium	W100		3	3	3		3			3	0.25	1	67.5	289	17	72
8.1.9	Install Canister Outer Closure Plate	W100		3	3	3	3	3			3	1	1	26.2	161	26	161
Horizontal Canister Transfer																	
8.3.2.1	Preparation for Horizontal Canister Transfer	ambient										4	6	1	1	24	24
8.1.10.1	Install Transfer Cask Top Cover	W100			3	3	3		3	3	3	0.5	2	9.2	63.4	9	63
8.1.10.2	Downend Transfer Cask on Transfer Trailer	W100			3	3	3		3	3	3	1	4	5	25	20	100
8.1.10.3	Tow Transfer Cask to ISFSI	W100			3	3	3		3	3	3	0.25	2	5	25	3	13
8.1.10.4	Stage Loaded Storage Cask	Ambient										4	6	1	1	24	24
8.1.10.5	Align/Dock Transfer Cask with Storage Cask	W100			3	3	3		3	3		0.25	2	40.6	212	20	106
8.1.10.6	Transfer the Canister to the Storage Cask	W100			3	3	3		3			0.25	2	5	25	3	13
8.1.10.7	Upend and Position Storage Cask on ISFSI Pad	W150										2	4	10	50	80	400
Total																**538**	**2131**

Table 10.3-3 - Estimated Cumulative Occupational Exposure for Retrieval of Fuel from Dry Storage Using Vertical Canister Transfer

Ch. 8 Sequence Number	Description	Primary Source	W100 Configuration									Effective				"Typical" Person-mrem	"Bounding" Person-mrem
			Wet?			Installed?											
			Canister Cavity	Annulus	Cask Neutron Shield	Inner Closure Plate	Outer Closure Plate	Welder	Cask Top Cover	Ram Access Cover	Cask Bottom Cover	Time in Field (hours)	Number of Personnel	"Typical" Dose Rate (mrem/hr)	"Bounding" Dose Rate (mrem/hr)		
Prepare for Canister Retrieval																	
8.3.1	Preparation of Transfer Cask for Canister Loading	none														0	0
Retrieve Canister																	
8.2.2.1	Transport Storage Cask to Cask Receiving Bay	W150										1	2	5	25	10	50
8.2.2.2	Prepare Transfer Cask	ambient										1	2	0.1	0.1	0	0
8.2.2.3	Prepare Storage Cask and Canister	W150										1	4	50	250	200	1000
8.2.2.4	Dock Transfer/Storage Cask and Retrieve Canister	W150										1	4	20	100	80	400
8.2.2.5	Move Canister and Transfer Cask to Decon Area	W100			3	3	3				3	0.25	1	259	826	65	207
Unload Fuel																	
8.2.3.1	Prepare Canister for Vent and Fill	W100		3	3	3	3				3	1	2	19.8	101	40	202
8.2.3.2	Vent and Fill Canister with Water	W100		3	3	3	3				3	1	2	26.2	161	52	322
8.2.3.3	Remove the Canister Inner and Outer Closure Plates	W100	3	3	3			3			3	2	2	24.9	101	100	404
8.2.3.4	Place Transfer Cask and Canister into Fuel Pool	W100	3	3	3						3	1	6	5	25	30	150
8.2.3.5	Remove Fuel from Canister	pool										8	2	1	1	16	16
8.2.3.6	Remove Empty Canister from Fuel Pool	pool										1	4	1	1	4	4
8.2.3.7	Ready Empty Canister	ambient										1	2	0.1	0.1	0	0
Total																**597**	**2755**

Table 10.3-4 - Estimated Cumulative Occupational Exposure for Retrieval of Fuel from Dry Storage Using Horizontal Canister Transfer

Ch. 8 Sequence Number	Description	Primary Source	W100 Configuration									Effective				"Typical" Person-mrem	"Bounding" Person-mrem
			Wet?			Installed?											
			Canister Cavity	Annulus	Cask Neutron Shield	Inner Closure Plate	Outer Closure Plate	Welder	Cask Top Cover	Ram Access Cover	Cask Bottom Cover	Time in Field (hours)	Number of Personnel	"Typical" Dose Rate (mrem/hr)	"Bounding" Dose Rate (mrem/hr)		
Prepare for Canister Retrieval																	
8.3.1	Preparation of Transfer Cask for Canister Loading	none														0	0
Retrieve Canister																	
8.2.1.1	Prepare Loaded Storage Cask	W150										8	2	8.2	28.7	131	459
8.2.1.2	Align and Dock Transfer Cask with Storage Cask	W150										0.25	2	5.8	18.9	3	9
8.2.1.3	Transfer Canister to the Transfer Cask	W100		3	3	3	3		3			0.25	2	5	25	3	13
8.2.1.4	Prepare Transfer Cask for Onsite Transport	W100		3	3	3	3		3	3	3	1	4	40.6	212	162	848
8.2.1.5	Move Canister and Transfer Cask to Decon Area	W100		3	3	3	3		3	3	3	0.25	2	5	25	3	13
Unload Fuel																	
8.2.3.1	Prepare Canister for Vent and Fill	W100		3	3	3	3				3	1	1	19.8	101	20	101
8.2.3.2	Vent and Fill Canister with Water	W100		3	3	3	3				3	1	1	26.2	161	26	161
8.2.3.3	Remove the Canister Inner and Outer Closure Plates	W100	3	3	3	3		3			3	4	1	24.9	101	100	404
8.2.3.4	Place Transfer Cask and Canister into Fuel Pool	W100	3	3	3						3	0.5	2	5	25	5	25
8.2.3.5	Remove Fuel from Canister	pool										1	4	1	1	4	4
8.2.3.7	Ready Empty Canister	ambient										1	2	0.1	0.1	0	0
Total																**460**	**2041**

10.4 Estimated Off-Site Collective Dose Assessment

In order to compare the performance of the FuelSolutions™ Storage System with the applicable regulations governing off-site dose, this section presents the calculated off-site exposure for a sample 8x8 array of storage casks containing W21 canisters.

It is not feasible to predict bounding off-site dose rates on a generic basis since background radiation from plant sources; the location and layout of an ISFSI; the number and configuration of storage casks; the characteristics of the SNF assemblies; and the canister loading and off-site shipment schedules are necessarily site-specific. The licensee must demonstrate compliance with 10CFR72.104 and 10CFR20, by performing a site-specific dose evaluation as part of the ISFSI design, accounting for the location of the site boundary and the effects of radiation from other on-site operations.

The off-site collective dose assessment considers normal, off-normal, and accident conditions. The significant contributors to off-site exposure are direct radiation from storage casks, and potential leakage of leakage of gases, volatiles, fuel fines, and crud from canisters.

All evaluated conditions include the direct dose component from a sample ISFSI with 64 storage casks arranged in an 8x8 square array. Each storage cask is assumed to be loaded with bounding PWR fuel. No credit is taken for radioactive decay of the fuel beyond the minimum required cooling time for storage and no credit is taken for radioactive decay while in storage on the ISFSI pad. The analyses include the effects of both neutron and gamma radiation, skyshine, ground reflection, and air attenuation using MCNP,[6] a Monte Carlo computer code. The models include a single cask and an 8x8 array which includes the effects of self-shielding by adjacent storage casks. Because the direct dose does not vary for off-normal or accident conditions, it is constant for all evaluated conditions. A description of the shielding methodology is provided in Section 5.4 of this FSAR.

Annual off-site dose rates from direct radiation are determined by multiplying the shielding results by an occupancy factor of 8760 hours/year. Site-specific analyses should consider appropriate occupancy factors for site conditions.

Table 10.4-1 and Table 10.4-2 list the direct dose rates vs. distance from a single cask and an 8x8 array of casks. Contributions from each face of the storage cask are subtotaled, as are the neutron and gamma subtotals. Figure 10.4-1 and Figure 10.4-2 graphically show the direct dose rate vs. distance from 0 to 1500 feet for a single cask and 8x8 array of casks, respectively.

All evaluated conditions include a component for potential leakage of gases, volatiles, fuel fines, and crud from canisters. Although leakage is not expected to occur in FuelSolutions™ canisters, it is assumed for the purpose of off-site dose assessments. The assumed leakage rates corresponding to the testing conditions, are corrected for canister temperatures and pressures for each condition. When performing the annual off-site dose assessments, the leakage is assumed to occur for one year (normal and off-normal conditions) or 30 days (accident conditions) for the bounding FuelSolutions™ canister design. Because the canister temperatures and pressures, and

[6] *MCNP4B: Monte Carlo N-Particle Transport Code System*, RSICC Code Package CCC-660, Radiation Shielding Information Code Center, Oak Ridge, Tennessee.

the assumed leakage time vary by condition, the leakage dose varies depending on the condition. The confinement analyses are described in Section 7.4.

Licensees have a range of alternatives for reducing off-site doses from their FuelSolutions™ Storage System to levels below these estimates, including:

- Load "coldest" fuel on the perimeter of a canister.
- Place "coldest" casks on the perimeter of an ISFSI.
- Use of natural terrain, adjacent structures, earthen berms, or auxiliary shield walls to provide supplemental shielding.
- Load SNF assemblies with longer cooling times than those specified by the fuel cooling time tables used for fuel assembly acceptance, resulting in lower storage cask surface doses to meet more conservative site-specific objectives (cooling times must always be within *technical specification* limits).

10.4.1 Off-Site Dose for Normal Operations

10CFR72.104 limits the annual off-site dose for normal operating conditions at the site boundary to a maximum of 25 mrem to the whole body, 75 mrem to the thyroid, and 25 mrem for other organs. This includes contributions from all nuclear fuel cycle operations, as described in Section 10.1.2.

Contributions from the direct dose and potential canister leakage are summed to determine the total annual off-site normal condition dose, as shown in Table 10.4-2 and Table 10.4-4 for the single cask and 8x8 cask array, respectively. The canister leakage doses presented in Table 10.4-3 are based on the highest of the whole body, thyroid, or limiting organ doses presented in Table 7.2-1 of this FSAR.

Assuming a 100% occupancy factor of 8760 hours/year and 100% bounding fuel, the off-site dose rates from the ISFSI alone reach the 25 mrem limit at approximately 200 meters and 500 meters for the single cask and 8x8 cask array, respectively. Licensees should consider site-specific occupancy factors and source terms for a more accurate off-site dose estimate.

10.4.2 Off-Site Dose for Off-Normal Conditions

Contributions from the direct dose and potential canister leakage are summed to determine the total annual off-site off-normal condition dose, as shown in Table 10.4-5 and Table 10.4-6 for the single cask and 8x8 cask array, respectively. The canister leakage doses presented in Table 10.4-5 are based on the highest of the whole body, thyroid, or limiting organ doses presented in Table 7.2-1 of this FSAR.

The only differences between the normal and off-normal cases arise from different canister internal temperatures and pressures which affect the calculated leak rates, and thus the dose contribution from canister leakage. The off-normal leakage dose from a single cask is added to the direct dose and the normal leakage dose from the remaining casks in the ISFSI. This difference results in a very small change to the calculated ISFSI dose rates from the normal condition evaluated above.

10CFR72.104 limits the annual off-site dose for off-normal operating conditions at the site boundary to a maximum of 25 mrem to the whole body, 75 mrem to the thyroid, and 25 mrem for other organs, including contributions from all nuclear fuel cycle operations.

Assuming a 100% occupancy factor of 8760 hours/year and 100% bounding fuel, the off-site dose rates from the ISFSI alone reach the 25 mrem/hr limit at approximately 250 meters and 500 meters for the single cask and 8x8 cask array, respectively. Licensees should consider site-specific occupancy factors and representative source terms for a more accurate off-site dose estimate.

10.4.3 Off-Site Dose for Accident Conditions

10CFR72.106 requires that any individual located on or beyond the nearest owner-controlled area boundary must not receive a dose greater than 5 rem to the whole body or any organ from a design basis accident.

Contributions from the direct dose and potential canister leakage are summed to determine the total annual off-site accident condition dose, as shown in Table 10.4-7 and Table 10.4-8 for the single cask and 8x8 cask array, respectively. The canister leakage doses presented in Table 10.4-7 are based on the highest of the whole body, thyroid, or limiting organ doses presented in Table 7.2-1 of this FSAR.

The only differences between the normal and accident cases arise from different canister internal temperatures and pressures which affect the calculated leak rates, and the assumed 30 day duration of the accident condition. These factors affect the dose contribution from canister leakage. The accident condition leakage dose from a single cask is added to the direct dose and the normal leakage dose from the remaining casks in the ISFSI. The direct and off-normal leakage dose contributions for an entire year of exposure are conservatively added to the accident condition leakage dose, despite the 30-day duration of the accident event.

Assuming a 100% occupancy factor of 8760 hours/year and 100% bounding fuel, the accident dose rates from the ISFSI alone are not bounding for any site boundary distance that satisfies the requirements for the normal condition. Licensees should consider site-specific occupancy factors and representative source terms for a more accurate off-site accident dose estimate.

Off-site exposure due to a postulated loss of transfer cask neutron shield is small, as can be shown by a simplified calculation. Assuming the transfer cask has a projected area of 2x5 meters, an accident surface dose rate of 6,776 mrem/hr, and the cask is present on the pad in the unshielded condition for 24 hours, there is no attenuation in air, and there is 100% ground reflection, then the total off-site dose due to the accident is roughly as shown below. Note that there is no relationship between the postulated loss of neutron shield accident and the canister accident leakage rates.

(Area)(Dose Rate)(Time)/$2\pi r^2$ = (2m)(5m)(6,776 mrem/hr)(24hrs) / 2π(100m)^2 = <u>25.3 mrem</u>.

Table 10.4-1 - Off-Site Direct Radiation Dose Rates - Single Cask

Distance (feet)	Direct Dose Rates From a Single Cask of Bounding Fuel (mrem/8760-hour year)								
	Gamma			Neutron			Totals		
	Side	Top	Vent	Side	Top	Vent	Gamma	Neutron	Total
10	49,582	107	861	96	8	2	50,545	106	50,651
20	25,930	113	2,208	47	8	4	28,207	60	28,267
50	6,912	77	12,702	11	5	26	19,710	42	19,752
100	1,734	42	1,770	3	2	4	3,548	9	3,556
200	369	18	219	1	1	0	606	2	608
400	69	5	35	0	0	0	110	0	110
600	22	2	12	0	0	0	36	0	36
800	9	1	4	0	0	0	14	0	14
1000	4	0	2	0	0	0	6	0	6
1250	2	0	1	0	0	0	2	0	2
1500	1	0	0	0	0	0	1	0	1

Note: Values rounded-off for clarity. Sums are accurate for full precision.

Table 10.4-2 - Off-Site Direct Radiation Dose Rates - 8x8 Array of Casks

Distance (feet)	Direct Radiation Dose Rates From an 8x8 ISFSI Array of Bounding Fuel (mrem/8760-hour year)								
	Gamma			Neutron			Totals		
	Side	Top	Vent	Side	Top	Vent	Gamma	Neutron	Total
10	169,068	1,901	3,084	339	124	6	174,324	470	174,794
20	121,764	2,251	6,570	222	144	13	130,524	378	130,902
50	49,406	2,146	15,242	82	124	31	66,839	236	67,074
100	16,381	1,454	2,786	28	76	6	20,586	110	20,696
200	4,038	746	641	8	33	1	5,422	43	5,465
400	832	240	131	2	9	0	1,200	11	1,212
600	275	87	43	1	3	0	406	4	410
800	108	35	18	0	1	0	161	2	163
1000	52	16	7	0	1	0	75	1	75
1250	20	5	3	0	0	0	28	0	28
1500	8	2	1	0	0	0	10	0	10

Note: Values rounded-off for clarity. Sums are accurate for full precision.

Table 10.4-3 - Off-Site Normal Condition Dose Rates for a Single Cask

Distance (meters)	Dose Rates for Bounding Fuel (mrem/8760-hour year)		
	Single Cask Normal Direct	Single Cask Normal Release	Total for Single Cask
100	176.7	4.3	181
110	140.9	3.3	144
120	113.9	2.7	117
130	93.0	2.3	95
150	63.5	1.8	65
200	27.1	1.2	28
300	6.6	0.57	7.2
500	0.4	0.22	0.6

Note: Values rounded-off for clarity. Sums are accurate for full precision.

Table 10.4-4 - Off-Site Normal Condition Dose Rates for an 8x8 Array of Casks

Distance (meters)	Dose Rates for Bounding Fuel (mrem/8760-hour year)		
	64 Casks Normal Direct	64 Casks Normal Release	Total for 8x8 Array of Casks
100	1,887.6	275	2163
110	1,502.4	208	1711
120	1,214.8	170	1385
130	995.2	146	1141
150	689.3	116	805
200	310.7	76.9	388
300	79.7	36.2	116
500	5.5	14.3	20

Note: Values rounded-off for clarity. Sums are accurate for full precision.

Table 10.4-5 - Off-Site Off-Normal Condition Dose Rates for a Single Cask

Distance (meters)	Dose Rates for Bounding Fuel (mrem/8760-hour year)[1]		
	Single Cask Off-Normal Direct[2]	Single Cask Off-Normal Release	Total for Single Cask
100	176.7	43.1	220
110	140.9	32.7	174
120	113.9	26.6	141
130	93.0	22.8	116
150	63.5	18.1	82
200	27.1	12.1	39
300	6.6	5.7	12.3
500	0.4	2.2	2.6

Notes:

(1) Values rounded-off for clarity. Sums are accurate for full precision.

(2) Off-normal direct dose rates are identical to normal direct dose rates.

Table 10.4-6 - Off-Site Off-Normal Condition Dose Rates for an 8x8 Array of Casks

Distance (meters)	Dose Rates for Bounding Fuel (mrem/8760-hour year)[1]			
	64 Casks Off-Normal Direct[2]	63 Casks Normal Release[3]	1 Cask Off-Normal Release[3]	Total for 8x8 Array of Casks
100	1,887.6	271	43.1	2,202
110	1,502.4	205	32.7	1,740
120	1,214.8	167	26.6	1,409
130	995.2	143	22.8	1,161
150	689.3	114	18.1	821
200	310.7	75.7	12.1	398
300	79.7	35.7	5.7	121
500	5.5	14.0	2.2	21.8

Notes:

(1) Values rounded-off for clarity. Sums are accurate for full precision.

(2) Off-normal direct dose rates are identical to normal direct dose rates.

(3) Regulations require that the off-normal release dose from one cask in the ISFSI be added to the normal release dose from the remaining casks in the ISFSI to yield the total off-normal release dose from the ISFSI.

Table 10.4-7 - Off-Site Accident Condition Dose Rates for a Single Cask

Distance (meters)	Dose Rates for Bounding Fuel (mrem/8760-hour year)[1]		
	Single Cask Accident Direct[2]	Single Cask Accident Release	Total for Single Cask
100	176.7	751	928
110	140.9	576	717
120	113.9	483	597
130	93.0	384	477
150	63.5	282	345
200	27.1	216	243
300	6.6	101	108
500	0.4	42	43

Notes:

(1) Values rounded-off for clarity. Sums are accurate for full precision.

(2) Accident direct dose rates are identical to normal direct dose rates.

Table 10.4-8 - Off-Site Accident Condition Dose Rates for an 8x8 Array of Casks

Distance (meters)	Dose Rates for Bounding Fuel (mrem/8760-hour year)[1]			
	64 Casks Accident Direct[2]	63 Casks Normal Release[3]	1 Cask Accident Release[3]	Total for 8x8 Array of Casks
100	1,887.6	271	751	2,909
110	1,502.4	205	576	2,283
120	1,214.8	167	483	1,865
130	995.2	143	384	1,522
150	689.3	114	282	1,085
200	310.7	75.7	216	602
300	79.7	35.7	101	216
500	5.5	14.0	42.1	62

Notes:

(1) Values rounded-off for clarity. Sums are accurate for full precision.

(2) Off-normal direct dose rates are identical to normal direct dose rates.

(3) Regulations require that the accident release dose from one cask in the ISFSI be added to the normal release dose from the remaining casks in the ISFSI to yield the total accident release dose from the ISFSI.

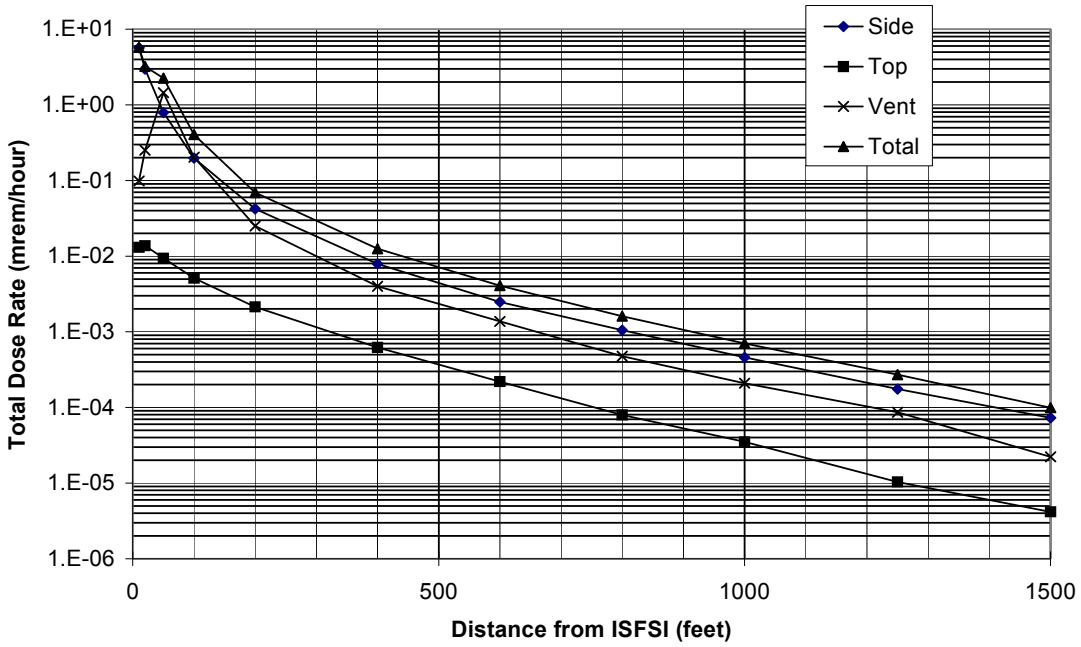

Figure 10.4-1 - Off-Site Direct Dose vs. Distance from a Single Cask

Note: Direct dose only- does not include leakage term.

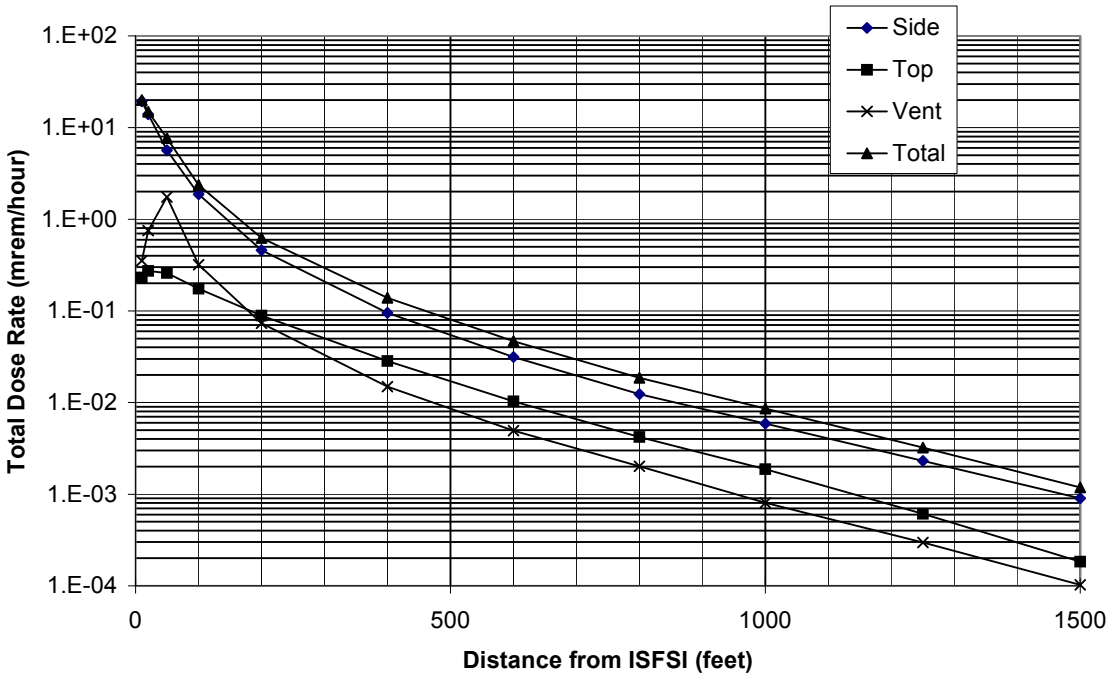

Figure 10.4-2 - Off-Site Direct Dose vs. Distance from an 8x8 Array of Casks

Note: Direct dose only- does not include leakage term.

This page intentionally left blank.

11. ACCIDENT ANALYSES

This chapter presents the evaluation of the FuelSolutions™ W150 Storage Cask and the W100 Transfer Cask (hereinafter respectively referred to as storage cask and transfer cask) for the effects of off-normal and postulated accident conditions. The design basis off-normal and postulated accident events, including those resulting from mechanistic causes, non-mechanistic causes, and those caused by natural phenomena, are identified in Sections 2.3.2, 2.3.3, and 2.3.4 of this FSAR. For each postulated event, the event cause, means of detection, consequences, and corrective action are discussed and evaluated. The evaluation of consequences includes structural, thermal, shielding, criticality, confinement, and radiation protection for the effects of each design basis event on the storage cask and transfer cask.

The storage cask and transfer cask designs are described in Sections 1.2.1.1 and 1.2.1.2, respectively, and shown in Figures 1.2-2 and 1.2-6, respectively. The structural, thermal, shielding, criticality, and confinement features and performance of the storage cask and transfer cask are discussed in Chapters 3, 4, 5, 6, and 7 of this FSAR. The evaluations provided in this chapter are based on the storage cask and transfer cask design features described therein.

The evaluation of the design basis off-normal and postulated accident events on the FuelSolutions™ canisters is contained in Chapter 11 of the respective FuelSolutions™ Canister Storage FSARs.

This page intentionally left blank.

11.1 Off-Normal Operations

The FuelSolutions™ Storage System is evaluated for all credible and significant design basis events resulting from off-normal operation. Off-normal conditions and events are defined in accordance with ANSI/ANS-57.9,[1] and include events which, although not occurring regularly, can be expected to occur with moderate frequency on the order of no more than once a year. As defined in Section 2.3.2 of this FSAR, off-normal events include the following:

- Extreme ambient conditions
- Potential misalignment of casks during horizontal canister transfer
- Potential failure of the hydraulic ram during horizontal transfer.

The results of the evaluations performed herein demonstrate that the storage cask and transfer cask described in Sections 1.2.1.1 and 1.2.1.2 can withstand the effects of off-normal events without affecting safety function, and are in compliance with the applicable acceptance criteria. The following sections present the evaluation of the FuelSolutions™ storage cask and transfer cask for the design basis off-normal conditions which demonstrate that the requirements of 10CFR72.122 are satisfied, and that the corresponding radiation doses satisfy the requirements of 10CFR72.104(a) and 10CFR20.

Load combinations evaluated for off-normal conditions are defined in Tables 2.3-6, 2.3-7 and 2.3-8. The load combinations include normal loads, which are evaluated in Section 3.5, and off-normal loads, which are evaluated in Section 3.6 of this FSAR.

The evaluation of the effects of off-normal conditions on the canister is provided in each corresponding FuelSolutions™ Canister Storage FSAR.

11.1.1 Off-Normal Temperature and Insolation Loadings

Many regions of the United States are subject to maximum summer temperatures in excess of 100ºF, and minimum winter temperatures that are significantly below 0°F. Therefore, to bound the expected temperatures of the storage cask and the transfer cask during these short-term periods of extreme off-normal ambient conditions, conservative analyses are performed to calculate the steady-state storage cask and transfer cask temperatures for a maximum 125ºF ambient temperature with maximum insolation and for a minimum -40ºF ambient without insolation. Design basis heat loadings for the storage cask and transfer cask, as documented in Chapter 4 of this FSAR, are used for this analysis.

11.1.1.1 Postulated Cause of the Event

While off-normal fluctuations in ambient conditions vary with geographical location and seasons, the selected off-normal ambient conditions bound all historical records for extreme temperatures and insolation throughout the contiguous United States. Therefore, the probability of extreme temperatures exceeding the off-normal thermal design conditions is negligible.

[1] ANSI/ANS-57.9, *Design Criteria for an Independent Spent Fuel Storage Installation (Dry Storage Type)*, American National Standards Institute, American Nuclear Society, 1984.

11.1.1.2 Detection of the Event

No monitoring of the ambient conditions is required at the ISFSI since the assumed off-normal steady-state ambient conditions bound those expected throughout the contiguous United States.

11.1.1.3 Summary of Event Consequences and Regulatory Compliance

11.1.1.3.1 Storage Cask

Structural

The structural evaluation of the storage cask for off-normal thermal conditions is described in Section 3.6.1.1 of this FSAR.

Thermal

The thermal analysis of the storage cask for off-normal thermal conditions is performed using the methodology, material properties, thermal models, and design basis heat loads described in Section 4.5.1 of this FSAR. The resulting off-normal storage cask temperatures for the hot and cold conditions are provided in Tables 4.5-2 and 4.5-4. As can be seen from these tables, all temperatures are within the allowable values described in Section 2.1.2.1. The corresponding concrete temperatures at the locations of the temperature monitoring thermocouples are 210ºF on the concrete at the liner and 178ºF in the concrete at mid-wall.

Shielding

There is no effect on the shielding performance of the storage cask as a result of this off-normal event.

Criticality

This off-normal event produces no changes in the storage cask that would affect the canister criticality evaluations provided in Chapter 6 of the FuelSolutions™ Canister Storage FSARs.

Confinement

The storage cask experiences no changes as a result of this off-normal event that would affect the confinement function of the canisters, as discussed in Chapter 7 of the FuelSolutions™ Canister Storage FSARs.

Radiation Protection

As there is no degradation in shielding or confinement, there is no effect on occupational or public exposures as a result of this off-normal event.

11.1.1.3.2 Transfer Cask

Structural

The structural evaluation of the transfer cask for off-normal thermal conditions is performed using the finite element model described in Section 3.5.3.2.1 and shown in Figure 3.5-3 of this FSAR. The analysis methodology, including the methodology for application of the thermal loads and calculation of resulting forces and stresses, is described in Section 3.5.3.2.3 of this FSAR. The resulting transfer cask stresses for this condition are provided in Table 3.6-2. Off-normal load combinations are provided in Section 3.6.5.

Thermal

The thermal analysis of the transfer cask for off-normal thermal conditions is performed using the methodology, material properties, thermal models, and design basis heat load described in Section 4.5.1 of this FSAR. The resulting off-normal transfer cask temperatures for the hot and cold conditions are provided in Table 4.5-6. As can be seen from the table, all temperatures are within the allowable values described in Section 4.3.2 of this FSAR.

Shielding

There is no effect on the shielding performance of the transfer cask as a result of this off-normal event.

Criticality

The transfer cask experiences no changes as a result of this off-normal event that would affect the criticality evaluation of the canisters provided in Chapter 6 of the FuelSolutions™ Canister Storage FSARs.

Confinement

The transfer cask experiences no changes as a result of this off-normal event that would affect the confinement function of the canisters discussed in Chapter 7 of the FuelSolutions™ Canister Storage FSARs.

Radiation Protection

As there is no degradation in shielding or confinement, there is no effect on occupational or public exposures as a result of this off-normal event.

11.1.1.4 Corrective Actions

The FuelSolutions™ storage cask and transfer cask are conservatively designed to safely accommodate steady-state off-normal conditions. Therefore, no corrective actions are required.

11.1.2 Cask Misalignment or Interference

The FuelSolutions™ Storage System is evaluated for the maximum hydraulic ram loads resulting from cask misalignment during horizontal canister transfer, as defined in Section 2.3.2 of this FSAR. These ram loads may be applied on either end of the canister assembly. The consequences of this event are evaluated for all horizontal canister transfer scenarios involving the storage cask or the transfer cask.

11.1.2.1 Postulated Cause of the Event

As described in Section 1.2.2.3 of this FSAR, a hydraulic ram is used during horizontal transfer of the canister to the casks. The ram slides the canister from cask to cask by pushing or pulling it between the storage cask and the transfer cask; the transfer cask and the transportation cask; or the storage cask and the transportation cask. Under normal conditions, the hydraulic ram loads are equal to the force required to overcome friction forces between the canister shell and the cask guide rails. Prior to performing horizontal canister transfer operations, the casks are docked, closely aligned, and secured together to prevent shifting or separation. In addition, beveled lead-ins are provided on the ends of the canister shell, cask openings, and the cask guide rails to

minimize the possibility of interference during horizontal transfer. However, it is postulated that in the unlikely event that the storage cask and transfer cask; transfer cask and transportation cask; or storage cask and transportation cask are not properly aligned during transfer, the hydraulic ram load could exceed the normal design loads.

11.1.2.2 Detection of the Event

During horizontal transfer operations, the hydraulic ram pressure (load) is monitored. In addition, the hydraulic ram loads are limited by the hydraulic system using automatic shut-off switches so that normal condition ram load of 45 kips is not exceeded. If the hydraulic system shuts down, indicating the possibility of a misalignment or interference, the operator may use override controls to increase the hydraulic ram loads up to the maximum design load of 70 kips pushing or 50 kips pulling after rechecking the cask for proper alignment. The override controls do not allow hydraulic ram loads to be increased above the maximum design load.

11.1.2.3 Summary of Event Consequences and Regulatory Compliance

11.1.2.3.1 Storage Cask

Structural

The effects on the storage cask of the loads arising from canister misalignment or interference during horizontal transfer from the transfer cask to the storage cask are evaluated for three interference scenarios:

- Misalignment resulting in the canister jamming against the storage cask annulus shielding ring
- Excessive friction between the canister shell and storage cask rails
- Continual application of ram pressure after the canister contacts the storage cask bottom end canister support tubes.

For transfer of the canister from the storage cask to the transfer cask or transportation cask, the storage cask is evaluated for the effects of the off-normal misalignment load which is transferred to the bottom end of the storage cask by the hydraulic ram mounting bracket which is bolted to the bottom end of the storage cask. For all three of these scenarios, the load is transferred from the storage cask to the transfer or transportation cask through the cask restraint attachment points.

The detailed evaluation of these three scenarios is provided in Section 3.6.3.1 of this FSAR. All components of the storage cask and the cask restraint are shown to be within the appropriate allowable values.

Thermal

The thermal effects of this short-term condition are bounded by the steady-state evaluation of the storage cask in the horizontal position, as documented in Section 4.5.1 of this FSAR.

Shielding

There is no effect on the shielding performance of the storage cask as a result of this off-normal event.

Criticality

The storage cask experiences no changes as a result of this off-normal event which would affect the criticality evaluation of the canisters provided in Chapter 6 of the FuelSolutions™ Canister Storage FSARs.

Confinement

The storage cask experiences no changes as a result of this off-normal event which would affect the confinement function of the canisters discussed in Chapter 7 of the FuelSolutions™ Canister Storage FSARs.

Radiation Protection

As there is no degradation in shielding or confinement, there is no effect on public exposures resulting from this off-normal event.

As discussed in Section 11.1.2.4, the recovery operations from this event will result in slight increases in occupational exposure. Chapter 10 of this FSAR shows that the occupational exposure for the horizontal canister transfer alignment, docking, and transfer operations is estimated to be 114 person-mrem for bounding fuel (26 person-mrem for typical fuel), requiring two individuals for a total of one-half hour. The recovery operation is estimated to require two individuals for two hours. Based on the personnel duration times in Chapter 10, the estimated additional occupational exposure for the recovery operation is 456 person-mrem for bounding fuel (104 person-mrem for typical fuel).

11.1.2.3.2 Transfer Cask

Structural

The loads on the transfer cask arising from canister misalignment during horizontal transfer from the transfer cask to the storage cask result in reaction loads that are transferred to the transfer cask by the cask restraints through the lower trunnions and the hydraulic ram attachment to the transfer cask top lid.

The effects on the transfer cask of the loads arising from canister misalignment during horizontal transfer from the storage cask to the transfer cask are evaluated for two interference scenarios:

- Excessive friction between the canister shell and transfer cask rails
- Continual application of ram pressure after the canister contacts the transfer cask top lid.

For these two scenarios, the reaction loads are transferred to the transfer cask by the cask restraints through the lower trunnions.

The evaluation of the stresses in the transfer cask components due to the interference scenarios is presented in Section 3.6.3.2 of this FSAR. All stresses are within the appropriate allowable values.

Thermal

The thermal effects of this short-term condition are bounded by the steady-state evaluation of the transfer cask in the horizontal position, as documented in Section 4.5.2 of this FSAR.

Shielding

There is no effect on the shielding performance of the transfer cask as a result of this off-normal event.

Criticality

The transfer cask experiences no changes as a result of this off-normal event that would affect the criticality evaluation of the canisters provided in Chapter 6 of the FuelSolutions™ Canister Storage FSARs.

Confinement

The transfer cask experiences no changes as a result of this off-normal event that would affect the confinement function of the canisters discussed in Chapter 7 of the FuelSolutions™ Canister Storage FSARs.

Radiation Protection

As there is no degradation in shielding or confinement, there is no effect on public exposures as a result of this off-normal event. The occupational exposure associated with recovery from this off-normal event is discussed in Section 11.1.2.3.1.

11.1.2.4 Corrective Actions

The corrective action for a canister misalignment or interference is to return the canister to the cask of origin. This is achieved by detaching the hydraulic ram and moving it to the opposite end of the storage cask or transfer cask to push the canister back into the cask of origin; or by attaching the pintle plate to the end of the canister, engaging the pintle plate with the hydraulic ram grapple, and pulling the canister back into the cask of origin. Upon return of the canister, the cask should be checked for proper docking or interferences, and/or the cask alignment should be checked and repositioned as necessary before renewing attempts to transfer the canister. The *technical specification* in Section 12.3 of this FSAR provides the actions required should this limit be exceeded.

11.1.3 Hydraulic Ram Failure During Horizontal Transfer

The FuelSolutions™ Storage System is evaluated for the effects of failure of the hydraulic ram during horizontal canister transfer operations, as defined in Section 2.3.2 of this FSAR.

11.1.3.1 Postulated Cause of the Event

During horizontal transfer of the canister between the storage cask and the transfer cask; the transfer cask and the transportation cask; or the storage cask and the transportation cask, a hydraulic ram is used to push or pull the canister between casks. Under normal conditions, the hydraulic ram operates normally and successfully performs its function. However, it is postulated that a mechanical failure of the hydraulic ram may occur during the canister transfer operation with the canister transfer only partially completed.

11.1.3.2 Detection of the Event

Since the ram is hydraulic, failure of the ram is most likely due to loss of hydraulic pressure, either due to a hydraulic leak, valve failure, or pump failure. This would be detected by the hydraulic ram pressure gauge. Further, the failure would be visibly obvious when the ram stops.

11.1.3.3 Summary of Event Consequences and Regulatory Compliance

Structural

There are no structural consequences as a result of this postulated event.

Thermal

A thermal analysis of the transfer cask is performed for the cask in the horizontal position for off-normal conditions in Section 4.5.2 of this FSAR. This analysis shows that under steady-state conditions, no cask components exceed the allowable temperatures identified in Section 4.3.2.

The storage cask is analyzed in the horizontal position for normal conditions in Section 4.5.1. The cask liner thermocouple temperature is monitored in accordance with the *technical specification* in Section 12.3 of the respective canister storage FSAR, and corrective actions completed as necessary.

For transfers to the transportation cask, this event is bounded by the transportation cask analysis with the FuelSolutions™ canister inside, which is provided in a separate transportation license application.

Shielding

There are no effects on the shielding performance of the storage cask or transfer cask as a result of this off-normal event.

Criticality

The storage cask and transfer cask experience no changes as a result of this off-normal event that would affect the criticality evaluation of the canisters provided in Chapter 6 of the FuelSolutions™ Canister Storage FSARs.

Confinement

The storage cask and transfer cask experience no changes as a result of this off-normal event that would affect the confinement function of the canisters discussed in Chapter 7 of the FuelSolutions™ Canister Storage FSARs.

Radiation Protection

As there is no degradation in shielding or confinement, there is no effect on public exposures as a result of this off-normal event.

Recovery from this event, as discussed in Section 11.1.3.4, will result in slight increases in occupational exposure due to the recovery operations. As discussed in Chapter 10 of this FSAR, the occupational exposure for the horizontal canister transfer operation is estimated to be 13 person-mrem for bounding fuel (3 person-mrem for typical fuel), requiring two individuals for a total of 0.25 hours. The recovery operation is estimated to require no more than two individuals for two hours in the proximity of the casks. Based on the personnel duration times in

Chapter 10, the estimated additional occupational exposure for the recovery operation is 104 person-mrem for bounding fuel (24 person-mrem for typical fuel).

11.1.3.4 Corrective Action

To perform repairs of the ram, if the failure is in the ram itself, it will be necessary to disengage the grapple from the pintle (if used), unbolt the ram from the cask and remove it to a remote location. If the failure is in the hydraulic power supply, the unit can be disconnected from the ram and removed to a remote location for repair Once repairs are completed, the ram is reattached (if removed), the hydraulic power supply reconnected to the ram, and the ram extended to the canister. If the pintle is being used, then the grapple is engaged. After completion of repairs, proceed with completion of the canister transfer operation.

While monitoring the storage cask liner thermocouple temperature during horizontal transfer, if the temperature exceeds the limit in the *technical specification* in Section 12.3 of the respective canister storage FSAR, appropriate corrective actions are to be taken as prescribed in the *technical specification*.

11.1.4 Off-Normal Load Combinations

Load combinations for off-normal conditions are performed for the transfer cask in accordance with Section 2.3 of this FSAR. The load combinations include normal loads, which are evaluated in Section 3.5, and off-normal loads, which are evaluated in Section 3.6. The load combinations for the transfer cask are reported in Table 3.6-3. The results show that the transfer cask stresses are within the applicable allowable values.

As discussed in Section 3.6.5 of this FSAR, the off-normal load combinations for the storage cask are bounded by those for normal and accident conditions.

11.2 Accidents

The FuelSolutions™ Storage System is evaluated for a range of postulated accident events and natural phenomena as defined in Sections 2.3.3 and 2.3.4, respectively. The design basis postulated accident conditions and events are in accordance with ANSI/ANS-57.9,[2] and include events which are postulated because their consequences may result in maximum potential impact on the immediate environs. Evaluations are performed for a range of postulated accidents, including those with the potential to result in an annual dose greater than 25 mrem outside the controlled area in accordance with 10CFR72.104(a). The design basis postulated accident events, including natural phenomena events, evaluated for the W150 Storage Cask and W100 Transfer Cask include the following as applicable:

- Fully blocked storage cask inlet and outlet vents
- Drop and tip-over
- Fire
- Explosive overpressure
- Flood
- Tornado winds and missiles
- Earthquake.

The results of the accident evaluation performed herein demonstrate that the FuelSolutions™ storage cask and transfer cask described in Sections 1.2.1.1 and 1.2.1.2 of this FSAR can withstand the effects of all credible accident conditions and natural phenomena without affecting their safety function, and are in compliance with the applicable acceptance criteria. The following sections present the evaluations of the FuelSolutions™ storage cask and transfer cask for the design basis postulated accident conditions which demonstrate that the requirements of 10CFR72.122 are satisfied, and that the corresponding radiation doses satisfy the requirements of 10CFR72.106(b) and 10CFR20.

The load combinations evaluated for postulated accident conditions are defined in Tables 2.3-6, 2.3-7 and 2.3-8. The load combinations include normal loads, which are evaluated in Section 3.5; off-normal loads, which are evaluated in Section 3.6; and accident loads, which are evaluated in Section 3.7 of this FSAR.

The evaluation for the effects of the design basis postulated accident events on the canister is provided in the corresponding FuelSolutions™ Canister Storage FSARs.

11.2.1 Fully Blocked Storage Cask Inlet and Outlet Vents

The FuelSolutions™ storage cask containing a design basis canister heat load is evaluated for a postulated accident thermal event in which complete blockage of all storage cask inlet and outlet

[2] ANSI/ANS-57.9, *Design Criteria for an Independent Spent Fuel Storage Installation (Dry Storage Type)*, American National Standards Institute, 1984.

vents occurs. A steady-state ambient temperature of 100°F with insolation, as defined in Section 2.3 and listed in Table 2.3-2, are conservatively postulated to occur concurrently.

11.2.1.1 Postulated Cause of the Event

The FuelSolutions™ storage cask is stored vertically on the ISFSI pad which is located outdoors and exposed to environmental conditions and natural phenomena. Although complete blockage of all eight of the storage cask inlet and outlet vents is highly unlikely, it is nonetheless postulated that all of the vents become completely blocked with debris as a result of unlikely natural phenomena such as a tornado or flood.

11.2.1.2 Detection of the Event

The blockage of inlet and/or outlet vents will be detected by the periodic inspection performed in accordance with the *technical specification* provided in Chapter 12 of this FSAR.

11.2.1.3 Summary of Event Consequences and Regulatory Compliance

Structural

The blockage of the vents results in increased temperatures inside the storage cask from the loss of air flow. This results in higher inside surface temperatures and larger thermal gradients in the storage cask walls. The internal concrete forces and moments are calculated using the methodology described in Section 3.5.3.1.1 of this FSAR. The resulting reinforced concrete forces and moments are provided in Section 3.7.1.

Thermal

A transient analysis of the storage cask with blocked vents, starting from normal ambient steady-state conditions, is described in Section 4.6.1 of this FSAR. The analysis is performed to determine the time until a storage cask component reaches the maximum allowable temperature, as defined in Section 4.3.1. The first component of the storage cask to reach the short-term allowable temperature is the concrete, with a local concrete surface temperature of 350ºF. For a storage cask with a Q_{max} heat load of 28.0 kW, this occurs 41 hours after the start of the event. The corresponding concrete temperature at the location of the cask liner thermocouple is 334ºF, and the associated rate of temperature increase is 80ºF per day.

When the storage cask allowable temperature is reached, canister material and fuel cladding temperatures are shown to be within acceptable values in Chapter 4 of the corresponding FuelSolutions™ Canister Storage FSARs.

Shielding

Since the storage cask remains within ACI allowable temperatures, no degradation of the concrete occurs for this postulated accident. Therefore there is no reduction in the shielding effectiveness of the storage cask.

Criticality

The storage cask experiences no changes as a result of this postulated accident that would affect the criticality analysis of the canisters provided in Chapter 6 of the FuelSolutions™ Canister Storage FSARs.

Confinement

The storage cask experiences no changes as a result of this postulated accident that would affect the confinement function of the canisters provided in Chapter 7 of the FuelSolutions™ Canister Storage FSARs.

Radiation Protection

As there is no degradation in shielding or confinement, there is no effect on public exposures as a result of this postulated accident.

Recovery from this postulated accident, as discussed in Section 11.2.1.4, will result in slight increases in occupational exposure due to the recovery operations. As discussed in Chapter 10 of this FSAR, the occupational exposure for the daily ISFSI surveillance operation is estimated to be 1.25 person-mrem. Further, the debris removal operation is estimated to require no more than two individuals for one hour in the proximity of the casks, with an additional estimated occupational exposure of 20 person-mrem.

11.2.1.4 Corrective Action

The vents may be cleared by hand, or with the use of suitable tools such as poles or grapples. The recovery must be completed within the time limit specified in the *technical specification* provided in Section 12.3 of this FSAR.

11.2.2 Storage Cask Drop

The storage cask is evaluated for a non-mechanistic drop which is postulated to occur during normal handling operations outside of the plant's fuel building, as discussed in Section 2.3.3.2.1 of this FSAR. The postulated drop accident is a vertical end drop onto the bottom end of the storage cask from a height of 36 inches. This drop scenario bounds any credible drops occurring during normal handling operations.

11.2.2.1 Postulated Cause of the Event

The canister is loaded vertically into the cask inside the plant's fuel building. The cask is then transported on-site to the ISFSI on a trailer, on air pallets, or on a transporter as discussed in Section 1.2 of this FSAR. For these operations, the only credible drop is due to the failure of the transporter, which results in an end drop of no more than six inches onto the roadway or storage pad. The drop height also bounds a non-mechanistic drop assuming that the trailer or air pallets experience a sudden catastrophic failure such that the cask falls directly to the ground.

For horizontal canister transfer, the cask is lifted vertically and placed on the cask upender/ downender J-skid. The maximum lift height for placing the cask into the upender/downender J-skid is 30 inches. Therefore the design basis drop height of 36 inches bounds a drop for this condition.

The possible drops which could occur during cask handling and transfer are bounded by the drop height evaluated.

11.2.2.2 Detection of the Event

The drop of the storage cask will be readily evident due to the size and weight of the cask.

11.2.2.3 Summary of Event Consequences and Regulatory Compliance

Structural

The drop evaluations are performed in two steps: (1) the rigid body dynamic response of the storage cask for the drop condition is calculated using the dynamic finite element analyses, and (2) finite element analyses are used to determine the storage cask internal forces and moments due to the drop loading.

The development of the model for the rigid body dynamic response is presented in Section 3.7.3 of this FSAR. The storage cask stress evaluation is performed as discussed in Section 3.7.3. The results of the evaluation indicate that the storage cask will allow recovery or repair after the postulated end drop. Cracking or spalling of the cover concrete at the bottom edge of the storage cask may result from the end drop, however any loss of the cover concrete on the bottom end of the storage cask will not affect its structural integrity. Compressive failure of the concrete on the cask bottom end is not expected to occur. Also, no permanent deformation of the top cover plate results from the end drop. It is therefore concluded that the postulated end drop will not impair the ability of the storage cask to perform its intended safety functions.

Thermal

The temperatures of the storage cask, canister, and fuel cladding may be affected as a result of damage to the storage cask vents and/or heat shield. This condition will be less severe than the accident thermal full vent blockage condition which is evaluated in Section 11.2.1. The results of the postulated vent blockage show that the storage cask temperatures remain within the short-term allowable temperatures provided that the blockages are cleared within the time limits required by the *technical specification* in Section 12.3 of this FSAR.

Shielding

Local damage to the concrete may result in slightly reduced shielding in the storage cask wall near the bottom end. As discussed in the structural evaluation above, this damage is expected to cover a very local area, only affecting the area of the storage cask which impacted the storage pad.

Criticality

Criticality control is provided by the design of the FuelSolutions™ canister basket. The effects of this postulated accident on the canister are evaluated in Chapter 3 of each FuelSolutions™ Canister Storage FSAR, and shown not to compromise the criticality control performance of the canister basket.

Confinement

Confinement is provided by the FuelSolutions™ canister shell. The effects of this postulated accident on the canister are evaluated in Chapter 3 of each FuelSolutions™ Canister Storage FSAR, and shown not to compromise the confinement function of the canister.

Radiation Protection

Since the storage cask is designed to protect the canister for the postulated drop, and since the effect of the drop on the shielding capability of the storage cask is minimal, the off-site dose

effects of this accident are negligible compared to the accident off-site dose criteria of 10CFR72.106(b).

Occupational exposure will be increased due to the recovery operations. It is estimated that retrieving the canister into the transfer cask will result in an occupational exposure equivalent to that required to retrieve a canister from an undamaged storage cask. The occupational exposure for the retrieval operation is provided in Chapter 10 of this FSAR.

11.2.2.4 Corrective Action

The storage cask must be recovered to facilitate canister retrieval operations. The storage cask tie rods are suitable for use to lift the cask. Once placed on a suitable surface, the cask may be moved into position to perform either vertical or horizontal canister retrieval operations as documented in Chapter 8 of this FSAR. Upon retrieval of the canister, the cask can be repaired using plant approved procedures, or disassembled and disposed of as low level waste. The canister and storage cask shall be evaluated by the licensee for reuse. Storage cask decommissioning is discussed in Chapter 14 of this FSAR.

11.2.3 Storage Cask Tip-over on J-Skid

The storage cask is evaluated for a postulated tip-over event when being upended or downended on the J-skid at the ISFSI. The storage cask is assumed to tip-over from a balanced position (i.e., center of gravity over bottom edge of the J-skid) with zero initial angular velocity, onto the storage cask impact limiter.

11.2.3.1 Postulated Cause of the Event

The tip-over event is postulated to occur as a result of a failure of the upender/downender during rotation of the storage cask between the vertical and horizontal positions.

11.2.3.2 Detection of the Event

The tip-over of the storage cask on the J-skid will be readily observed by operating personnel.

11.2.3.3 Summary of Event Consequences and Regulatory Compliance

Structural

The tip-over evaluation is performed in two steps: (1) the rigid body dynamic responses of the storage cask for the tip-over condition is calculated for the tip-over of the J-skid on the storage cask impact limiter, and (2) finite element analyses are used to determine the storage cask internal forces and moments due to the tip-over loading.

Discussion of the analysis performed for the rigid body dynamic response is provided in Section 3.7.4.1 of this FSAR. The storage cask stress evaluation is presented in Section 3.7.4.2. The results of the structural evaluation indicate that the storage cask will allow recovery or repair after the postulated tip-over. Cracking or spalling of the cover concrete on the outer surface of the storage cask where it rests on the J-skid may result from the tip-over, but this will not affect its structural integrity. It is therefore concluded that the postulated tip-over will not impair the ability of the storage cask to perform its intended safety functions.

Thermal

The temperatures of the storage cask, canister, and fuel cladding may be affected as a result of damage to the storage cask vents and/or heat shield. This condition will be less severe than the accident thermal full vent blockage condition which is evaluated in Section 11.2.1. The results of the postulated vent blockage show that the storage cask temperatures remain within the short-term allowable temperatures.

The storage cask is analyzed in the horizontal position for normal conditions in Section 4.4.1 of this FSAR. The *technical specification* in Section 12.3 of the respective canister storage FSAR provides the limits and corrective actions should the allowable concrete temperatures be exceeded.

Shielding

Local damage to the concrete may result in slightly reduced shielding in the storage cask wall. As discussed in the structural evaluation above, this damage is expected to extend no further than the reinforcing steel concrete cover, which is a maximum of two inches. This would result in an increase in the dose rate from the design basis value of 50 mrem/hour to 125 mrem/hour. Further, this reduction is over a very local area, only affecting the area of the storage cask which rests against the J-skid.

Criticality

Criticality control is provided by the design of the FuelSolutions™ canister basket. The effects of this postulated accident on the canister basket are evaluated in Chapter 3 of each FuelSolutions™ Canister Storage FSAR. The worst case resulting permanent deformations for all accident drops and the tip-over is used in the accident criticality analysis evaluated in Chapter 6 of each FuelSolutions™ Canister Storage FSAR.

Confinement

Confinement is provided by the FuelSolutions™ canister shell. The effects of this postulated accident on the canister are evaluated in Chapter 3 of each FuelSolutions™ Canister Storage FSAR and shown not to compromise the confinement function of the canister.

Radiation Protection

Since the storage cask is designed to protect the canister for the postulated tip-over, and since the effect of the tip-over on the shielding capability of the storage cask is minimal, the off-site dose effects of this accident are negligible compared to the accident off-site dose criteria of 10CFR72.106(b).

Occupational exposure will be increased due to the recovery operations. It is estimated that uprighting the cask and retrieving the canister into the transfer cask will result in occupational exposure approximately equal to that required to retrieve a canister from an undamaged storage cask. The occupational exposure for the retrieval operation is provided in Chapter 10 of this FSAR.

11.2.3.4 Corrective Action

The storage cask must be recovered to facilitate canister retrieval operations. Upon completion of upender/downender repairs the cask may be moved into position to perform horizontal

canister retrieval operations as documented in Chapter 8 of this FSAR. Upon retrieval of the canister, the cask can be repaired using plant-approved procedures, or disassembled and disposed of as low level waste. Storage cask decommissioning is discussed in Chapter 14 of this FSAR.

11.2.4 Transfer Cask Drop

The transfer cask is evaluated for a postulated accident side drop, as discussed in Section 2.3.3.2.2 of this FSAR. The transfer cask is secured to the horizontal transfer skid and trailer in a horizontal orientation for all operations occurring outside the plant's fuel building. In this configuration, the transfer cask is very stable and it is unlikely that the trailer and skid would tip-over under the most severe natural phenomena. The most likely cause of a transfer cask side drop is failure of the horizontal transfer skid supports or trailer suspension. Under this scenario, the transfer cask would drop vertically a short distance (approximately one foot) and impact the skid. The drop loads would be minimal due to the softness of the inflatable trailer tires. In order to provide a transfer cask drop analysis that bounds any postulated transfer cask drop or trailer tip-over during on-site transport operations, a horizontal side drop from a height of 72 inches is considered, as discussed in Section 2.3.3.2.2.

11.2.4.1 Postulated Cause of the Event

The postulated transfer cask drop accident is non-mechanistic. The transfer cask upper trunnions and lifting yoke are designed, fabricated, and tested to meet the requirements of non-redundant special lifting devices used for critical lifts in accordance with ANSI N14.6, as described in Sections 1.2.1.2 and 1.2.1.4.4 of this FSAR. Nevertheless, the postulated transfer cask side drop condition is considered regardless of the credibility of occurrence. In addition, the horizontal transfer skid and trailer described in Section 1.2.1.4.2 of this FSAR are robust heavy industrial equipment specifically designed for their intended use, with high reliability and safety margins.

11.2.4.2 Detection of the Event

The drop of the transfer cask would be recognized by personnel performing the cask handling operations at the time of the accident.

11.2.4.3 Summary of Event Consequences and Regulatory Compliance

Structural

The analysis to determine the rigid body deceleration loads of the transfer cask for the postulated 72-inch side drop is presented in Section 3.7.5.1 of this FSAR.

The transfer cask stress evaluation is presented in Section 3.7.5.2. The analysis results show that the maximum primary membrane stress intensity is less than the allowable.

The stability analysis of the transfer cask body is presented in Section 3.7.5.2, and demonstrates that the transfer cask satisfies the applicable stability requirements.

Failure of the neutron shield shell is postulated to occur as a result of the side drop. Loss of the neutron shield will not affect the structural integrity of the transfer cask.

Thermal

Loss of the liquid neutron shield as a result of the side drop impact will result in a reduction of the thermal conductivity through the cask wall, as the drained neutron shield cavity is assumed to be filled with air. This accident analysis is discussed in Section 4.6.2 of this FSAR. The resulting maximum transfer cask temperatures reported in Table 4.6-4 are all less than the allowable values.

Shielding

The loss of the liquid neutron shield will result in a significant decrease in neutron shielding and a small decrease in gamma shielding. The shielding analysis for this configuration is the same as that shown in Figure 5.3-3, except that the neutron shield water is assumed to be replaced by air. The resulting dose rates at the sides of the transfer cask are 1.9 rem/hour at the surface and 0.6 rem/hour at one meter for typical fuel, and 6.8 rem/hour at the cask surface, 2.3 rem/hour at one meter, and approximately 1 mrem/hour at 100 meters for bounding fuel.

Criticality

Criticality control is provided by the design of the FuelSolutions™ canister basket. The effects of this postulated accident on the canister basket are evaluated in Chapter 3 of each FuelSolutions™ Canister Storage FSAR. The worst case resulting permanent deformations for all accident drops and the tip-over are used in the accident criticality analysis evaluated in Chapter 6 of each FuelSolutions™ Canister Storage FSAR.

Confinement

Confinement is provided by the FuelSolutions™ canister shell. The effects of this postulated accident on the canister are evaluated in Chapter 3 of each FuelSolutions™ Canister Storage FSAR and shown not to compromise the confinement function of the canister.

Radiation Protection

As noted above, the loss of neutron shielding results in increased dose rates from the transfer cask. The effects on off-site doses are minimal, as the dose rate at the 100-meter ISFSI site boundary for bounding fuel is approximately 1 mrem/hour.

Occupational exposures will be increased due to the recovery operations. Total occupational exposure for the recovery operation is 2500 person-mrem assuming that:

- Five individuals are working in close proximity to the cask for two hours
- Temporary neutron shielding (such as polypropylene sheets) is used
- Work is performed from the ends of the cask where the contact doses are lower
- General dose fields are reduced to an estimated 250 mrem/hour.

11.2.4.4 Corrective Actions

The corrective action for this non-mechanistic event is to recover the transfer cask and remove the fuel from the canister in the transfer cask. Recovery can be accomplished by lifting the cask using the lifting trunnions, either with the yoke or with suitable slings. If feasible, the cask can be put back on the horizontal transfer skid and trailer. Otherwise it can be placed on cribbing on a suitable heavy-haul trailer. Temporary shielding, in the form of polypropylene sheets or other suitable material, should be used to minimize dose rates. The transfer cask can then be returned

to the plant's fuel building for canister unloading, using the procedures for fuel retrieval described in Chapter 8 of this FSAR. The transfer cask can then be removed to a low dose area, inspected for damage, and repaired or disposed of as appropriate. Decommissioning of the transfer cask is discussed in Chapter 14 of this FSAR.

11.2.5 Fire

The FuelSolutions™ storage cask and transfer cask are evaluated for their performance in a postulated fire accident environment. The hypothetical fire accident is defined in Section 2.3.3.4 of this FSAR. It is anticipated that this fire will bound for all sites since typical storage sites do not have significant combustion sources within twenty feet of the storage casks.

11.2.5.1 Postulated Cause of the Event

ISFSI fires may result from fires in nearby:

- Foliage
- Manmade structures
- Vehicles used for ISFSI operations and maintenance
- Fuel carried by those vehicles.

Combustion of other materials that may periodically be present at the ISFSI pad, such as scaffolding, cribbing, etc., are considered inconsequential compared to the fire profile used for evaluation.

11.2.5.2 Detection of the Event

Significant fires will be readily detected and mitigated by on-site personnel trained for such operations.

11.2.5.3 Summary of Event Consequences and Regulatory Compliance

Structural

A discussion of the structural effects of this event on the storage cask is provided in Section 3.7.6 of this FSAR. As discussed therein, there may be some spalling of concrete, but the bulk of the concrete will remain intact and allow normal unloading of the storage cask. The storage cask can then be inspected for damage and dispositioned accordingly as discussed in Section 11.2.5.4.

Similarly, a discussion of the structural effects of this event on the transfer cask is also provided in Section 3.7.6 of this FSAR. As discussed therein, some of the structural materials reach temperatures approaching that of the fire for a short period of time. However, the time for which the material is at this temperature will not result in any significant material degradation. Therefore the transfer cask will also permit recovery following the fire, as discussed in Section 11.2.5.4.

Thermal

The thermal effects of the postulated fire for the storage cask are evaluated in Section 4.6.1 of this FSAR. The results show that the maximum concrete surface temperature on the exterior of the cask reaches 916ºF. This exceeds the ACI 349 allowable short-term local temperature of 350ºF. However, less than two inches of concrete exceeds the allowable short-term surface concrete temperature of 350°F as discussed in Section 4.6.1.5.2. Therefore, the storage cask will adequately withstand the effects of a postulated fire accident.

The effects of the fire on the transfer cask are evaluated in Section 4.6.2 of this FSAR. The results show that certain components of the transfer cask exceed the allowable temperatures, however this occurs for a short period of time during the fire and quickly decreases below the allowable values after the fire. All structural and gamma shielding material temperatures remain below material allowable temperatures. The solid neutron shielding material exceeds the allowable operating temperature, resulting in a loss of shielding effectiveness. The allowable temperature of the O-rings is exceeded, however the O-rings need not be functional for the dry condition under which the fire is assumed to occur. It is assumed that the neutron shield fluid is lost for this postulated accident.

Shielding

The radiological consequences of a fire event result from increased storage cask radiation levels if concrete spalling were to occur. As discussed in the structural evaluation above, the postulated fire causes concrete spalling to the depth of the exterior rebar. As a result, the surface dose rate will increase from 50 to 125 mrem/hour. The loss of neutron shield for the transfer cask is evaluated in Section 11.2.4.3, with resulting dose rates increasing to 1.9 rem/hour contact and 0.6 rem/hour at one meter for typical fuel.

Criticality

The storage cask experiences no changes as a result of this postulated accident that would affect the criticality analysis of the canisters provided in Chapter 6 of the FuelSolutions™ Canister Storage FSARs. The transfer cask loss of neutron shield resulting from this event, which changes the boundary conditions for the criticality analysis, is evaluated in Chapter 6 of each FuelSolutions™ Storage System FSAR.

Confinement

Confinement is provided by the FuelSolutions™ canister shell. The effects of this postulated accident on the canister are evaluated in Chapter 3 of each FuelSolutions™ Canister Storage FSAR and shown not to compromise the confinement function of the canister.

Radiation Protection

As shown in the above shielding discussion, the increases in storage cask dose rates are minimal, and will not result in notable increases in off-site exposure.

Occupational exposures will slightly increase as a result of inspection and recovery operations. Assuming a worst case loss of two inches of concrete, it is anticipated that inspection and repair of damaged concrete will require two individuals one 8-hour day per cask, with about 20% of the time in the radiation field. The resulting occupational exposure for each cask repaired is

estimated to be 400 person-mrem. As discussed in Section 11.2.4.3, the occupational exposure for recovery from loss of the neutron shield is estimated to be 2500 person-mrem.

11.2.5.4 Corrective Action

The concrete storage cask must be inspected for surface damage (i.e., significant cracking or spalling) as a result of this postulated event. The necessary corrective action will depend on the amount of actual sustained damage in the concrete, as summarized below.

Concrete Damage	Action Required
Hairline cracks or no visible damage	No action required
Significant local cracking or minor spalling	Repair the storage cask concrete in place using approved procedures
Significant surface cracking and substantial spalling, little or no exposed reinforcing steel	Retrieve the canister to the transfer cask, repair the storage cask concrete using approved procedures, then return the storage cask to service
Substantial spalling and concrete damage below the depth of the reinforcing steel	Remove the storage cask from service

The transfer cask recovery operations, for the loss of neutron shielding, are discussed in Section 11.2.4.4. In addition, the O-rings must be replaced prior to placement of the transfer cask into the spent fuel pool.

11.2.6 Explosive Overpressure

The pressure effects of the design basis tornado wind load are assumed to envelop any credible explosive overpressure loads on the FuelSolutions™ Storage System. As shown in Section 2.3.4.2.2.1 of this FSAR, the lateral surface pressure resulting from the design basis tornado wind loading is 356 psf for the storage cask and 427 psf for the transfer cask. Site-specific hazards should be compared to the design basis tornado wind pressure loading to ensure that the resulting explosive overpressures are bounded. Evaluation of the storage cask and transfer cask for the tornado loading is provided in Section 11.2.8.

11.2.7 Flood

The FuelSolutions™ storage cask is evaluated for the effects of an enveloping design basis flood, postulated to result from natural phenomena such as a tsunami and seiches, as specified by 10CFR72.122(b). For the purpose of this evaluation, a 50-foot flood height and water velocity of 21 feet/second are used as specified in Section 2.3.4.1 of this FSAR.

11.2.7.1 Postulated Cause of the Event

The probability of a flood event is specific to each ISFSI site location. As specified in 10CFR72.122(b), a range of flood types, such as tsunami and seiches, are included. In addition,

floods resulting from other sources, such as high water from a river or a broken dam, are postulated as the cause of the accident.

11.2.7.2 Detection of the Event

This event will be detected by existing plant monitoring systems for those sites subject to flooding.

11.2.7.3 Summary of Event Consequences and Regulatory Compliance

Structural

The FuelSolutions™ storage cask has been evaluated for the design basis flood load. The analysis results show that the storage cask remains upright and does not slide under the design basis flood event. The evaluation of overturning and sliding stability of the storage cask is provided in Section 3.7.8 of this FSAR.

The structural consequences of the flood event on the storage cask are considered insignificant compared to other more severe accidents such as the tornado, earthquake, and drop. Since the storage cask is an atmospheric pressure vessel, hydrostatic pressures are limited to buoyancy effects. The flood loads which act on the storage cask include lateral water pressure and thermal stress due to the quenching effect of the flood. The storage cask internal forces, moments, and stresses resulting from the flood loads are bounded by those resulting from the drop and tornado loads.

Thermal

Under postulated flood conditions, the storage cask vents and annular space are filled with water. While this precludes the natural convective air flow relied on for heat removal during normal storage conditions, the water provides superior heat transfer, and the large thermal mass of the flood water results in lower temperatures than those associated with normal storage conditions. For the case of only the inlet vents blocked, either by flood waters or by debris left as a result of flooding, this condition is bounded by the blocked vent case discussed in Section 11.2.1.

Shielding

There is no reduction in shielding as a result of this postulated accident.

Criticality

Criticality control is provided by the design of the FuelSolutions™ canister basket. The effects of this postulated accident on the canister are evaluated in Chapter 6 each FuelSolutions™ Canister Storage FSAR.

Confinement

Confinement is provided by the FuelSolutions™ canister shell. The effects of this postulated accident on the canister are evaluated in Chapter 3 of each FuelSolutions™ Canister Storage FSAR and shown not to compromise the confinement function of the canister.

Radiation Protection

Since there is no effect on shielding and the canister will not breach, there is no effect on radiation protection.

11.2.7.4 Corrective Action

After the flood water recedes, the storage cask vent screens must be visually inspected for blockage from debris or silt and the liner thermocouple temperature of all loaded storage casks on the ISFSI pad must be monitored in accordance with the *technical specification* contained in Section 12.3 of the applicable canister FSAR. Any debris or silt that was deposited at the inlet or outlet vents as a result of the flooding event must be removed as required by the *technical specification* contained in Section 12.3 of the applicable canister FSAR.

11.2.8 Tornado

The FuelSolutions™ Storage System is evaluated for the effects of the design basis tornado wind and tornado wind-driven missile loads defined in Sections 2.3.4.2 and 2.3.4.3 of this FSAR. Tornado wind loads produce lateral wind pressure loading on the side of the cask. Tornado missiles are evaluated to ensure adequate missile penetration resistance of the storage cask and transfer cask. General and local structural failure modes are evaluated to ensure adequate protection of the canister and SNF from the effects of the tornado missiles. The overturning and sliding stability and the structural integrity of the storage cask and transfer cask are evaluated for the combined effects of the design basis tornado wind and missile loads.

11.2.8.1 Postulated Cause of the Event

The probability of a tornado at an ISFSI is dependent on its geographic location. For some sites in the United States, the probability is such that a storage cask could be subjected to weather patterns capable of producing tornado conditions during its service life. Current meteorology methods are able to identify the atmospheric conditions which are conducive to the occurrence of tornadoes. In accordance with normal prudent operating procedures, transfer operations should not be performed under conditions in which a high probability of a tornado exists. However, it is assumed for analysis purposes that there will not be sufficient warning of tornadoes to preclude the possibility of exposure to tornadoes during transfer operations outside the plant's fuel building.

11.2.8.2 Detection of the Event

This event is self-evident.

11.2.8.3 Summary of Event Consequences and Regulatory Compliance

<u>*Structural*</u>

The FuelSolutions™ storage cask has been evaluated for the design basis tornado loads. The analysis results show that the storage cask and the transfer cask remain upright under the design basis tornado events. Although the combination of tornado wind and missile impact could cause a storage cask to slide, there is sufficient spacing to preclude contact with another storage cask. The results also show that the storage cask internal forces and moments and the transfer cask stresses remain within their respective allowables, and that their designs are suitable to prevent tornado missile penetration, thus providing suitable protection for the canister within. The structural evaluation of the storage cask and the transfer cask for this event is provided in Section 3.7.9 of this FSAR.

Thermal

Since the storage cask is sufficient to prevent missile penetration and scabbing or spalling, there is no reduction in its thermal capacity.

The transfer cask will experience a rupture of the neutron shield and the resultant loss of the water shielding. Loss of the liquid neutron shield will result in a reduction of the thermal conductivity through the cask wall, as the drained neutron shield cavity is assumed to be filled with air. This accident analysis is discussed in Section 4.6.2 of this FSAR. The resulting maximum transfer cask temperatures are reported in Table 4.6-4, and are shown to be less than the allowable values.

Shielding

The loss of the liquid neutron shield will result in a significant decrease in neutron shielding and a small decrease in gamma shielding. The shielding analysis for this configuration is the same as that shown in Figure 5.3-3, except that the neutron shield water is assumed to be replaced by air. The resulting dose rates at the sides of the transfer cask are 1.9 rem/hour at the surface and 0.6 rem/hour at one meter for typical fuel.

Criticality

The storage cask experiences no changes as a result of this postulated accident that would affect the criticality analysis of the canisters provided in Chapter 6 of the FuelSolutions™ Canister Storage FSARs. The transfer cask loss of neutron shield resulting from this event, which changes the boundary conditions for the criticality analysis, is evaluated in Chapter 6 of each FuelSolutions™ Storage System FSAR.

Confinement

The storage cask and transfer cask provide adequate protection for the effects of tornado wind and missile loads. This postulated accident has no effect the confinement function of the canisters discussed in Chapter 7 of the FuelSolutions™ Canister Storage FSARs.

Radiation Protection

As noted above, the loss of neutron shielding results in increased dose rates from the transfer cask. The effects on off-site doses are minimal, as the dose rate at the 100-meter ISFSI site boundary is approximately 1 mrem/hour.

Occupational exposures will be increased due to the recovery operations. Total occupational exposure for the recovery operation is 2500 person-mrem assuming that:

- Five individuals are working in close proximity to the cask for two hours
- Temporary neutron shielding (such as polypropylene sheets) is used
- Work is performed from the ends of the cask where the contact doses are lower
- General dose fields are reduced to an estimated 250 mrem/hour.

11.2.8.4 Corrective Actions

The corrective action for the storage cask is to evaluate the concrete and disposition it in accordance with the corrective actions described in Section 11.2.5.4.

The corrective action for the transfer cask due to this accident is to place temporary shielding, in the form of polyurethane sheets or other suitable material, around the transfer cask to minimize dose rates. The cask can then continue to the ISFSI to complete horizontal canister transfer operations. Alternatively, the transfer cask can be returned to the fuel building for canister unloading, using the procedures for fuel retrieval in Chapter 8 of this FSAR. The transfer cask can then be removed to a low dose area, inspected for damage, and repaired.

11.2.9 Earthquake

As discussed in Section 2.3.4.4 of this FSAR, design basis seismic forces, equal to 0.25*g* acting horizontally in two orthogonal directions, and 0.25*g* vertical, are assumed to act on the FuelSolutions™ storage cask and on the FuelSolutions™ transfer cask.

11.2.9.1 Postulated Cause of the Event

Earthquakes are naturally occurring events that occur without warning. Earthquake magnitudes and probabilities vary greatly throughout the United States, with the highest probability of the most severe earthquakes occurring at sites west of the Rocky Mountains. The FuelSolutions™ Storage System is designed to withstand seismic loads up to the magnitude of the Safe Shutdown Earthquake (SSE) for the ISFSI site. The site-specific SSE should be evaluated by the licensee and shown to be enveloped by the design basis seismic loads.

11.2.9.2 Detection of the Event

The plant's seismic alarms will detect any seismic event.

11.2.9.3 Summary of Event Consequences and Regulatory Compliance

Structural

The FuelSolutions™ storage cask and transfer cask have been evaluated for the design basis seismic loads. The analysis results show that the storage cask and transfer cask remain upright and do not slide under the design basis seismic events. The results also show that the transfer cask and storage cask remain within their respective allowable stresses. The structural evaluation of the storage cask and transfer cask for this event is provided in Section 3.7.10 of this FSAR.

Thermal

There is no reduction in thermal capability of the storage cask or the transfer cask as a result of this event.

Shielding

There is no reduction in shielding capability of the storage cask or the transfer cask as a result of this event.

Criticality

Criticality control is provided by the design of the FuelSolutions™ canister basket. The effects of this postulated accident on the canister are evaluated in Chapter 3 of each FuelSolutions™ Canister Storage FSAR, and shown not to compromise the criticality control function of the canister basket.

Confinement

Confinement is provided by the FuelSolutions™ canister shell. The effects of this postulated accident on the canister are evaluated in Chapter 3 each FuelSolutions™ Canister Storage FSAR, which demonstrate that the canister shell remains intact for this event.

Radiation Protection

Since there is no effect on shielding or confinement as a result of this event, there are no radiological consequences to off-site doses or occupational exposure.

11.2.9.4 Corrective Actions

Since the storage cask and transfer cask are not compromised by this postulated accident, no corrective actions are required.

11.2.10 Accident Condition Load Combinations

Load combinations for accident conditions are performed for the storage cask and the transfer cask in accordance with Section 2.3.5 of this FSAR. The load combinations include normal loads, which are evaluated in Section 3.5, off-normal loads, which are evaluated in Section 3.6, and accident loads which are evaluated in Section 3.7. The load combinations for the reinforced concrete sections are provided in Table 3.7-2. Structural steel component load combinations are shown in Table 3.7-2 for the storage cask, and in Table 3.7-4 for the transfer cask. The results show that the storage cask and the transfer cask are within the applicable allowable values.

12. OPERATING CONTROLS AND LIMITS

This chapter includes controls and limits (*technical specifications*) for the FuelSolutions™ Storage System operations following completion of canister loading with qualified fuel assemblies. Thus, the controls and limits described herein apply to the operation of FuelSolutions™ Storage System components required to safely close, transfer, and dry store sealed FuelSolutions™ canisters, which include those pertaining to the FuelSolutions™ W100 Transfer Cask and the FuelSolutions™ W150 Storage Cask with which the canister is used. These controls and limits are established to assure that the FuelSolutions™ Storage System operations delineated in Chapter 8 of this FSAR are conducted in a manner that satisfies the system design requirements contained in Chapter 2 of this FSAR. The controls and limits for canister-specific requirements, including qualification of the SNF assemblies, are presented in Chapter 12 of each FuelSolutions™ Canister Storage FSAR.

This page intentionally left blank.

12.1 Proposed Operating Controls and Limits

The areas where controls and limits are necessary to assure safe operation of the FuelSolutions™ Storage System are shown in Table 12.1-1. The conditions and other characteristics noted in the table are selected based on the safety analyses for normal, off-normal, and accident conditions documented in previous chapters of this FSAR and in the individual FuelSolutions™ Canister Storage FSARs. The *technical specifications* are provided in Section 12.3.

Table 12.1-1 - Summary of FuelSolutions™ Storage System Operating Controls and Limits

Condition to be Controlled	Applicable Technical Specifications	FSAR Location	
		Storage System	Canister
Criticality Control	2.1.1 Fuel to be Stored		✓
Confinement Boundary Integrity	3.1.3 Canister Leak Rate	✓	
	3.1.4 Hydraulic Ram Force During Horizontal Canister Transfer	✓	
Fuel Integrity	3.1.1 Canister Helium Backfill Density	✓	
	3.1.3 Canister Leak Rate	✓	
	3.3.2 Storage Cask Periodic Monitoring		✓
Radiological Protection	3.2.1 Canister Surface Contamination	✓	
	5.3.5 Storage Cask Dose Rates	✓	
	3.5.1 Transfer Cask Surface Contamination	✓	
Heat Removal Capability	3.1.1 Canister Helium Backfill Density		✓
	3.3.2 Storage Cask Periodic Monitoring		✓
Structural Integrity	3.1.5 Canister Vertical Time Limit in Transfer Cask		✓
	3.3.2 Storage Cask Periodic Monitoring		✓
	3.3.3 Storage Cask Temperatures During Horizontal Transfer		✓
	3.4.1 Transfer Cask Structural Shell Temperature	✓	

12.2 Development of Operating Controls and Limits

The FuelSolutions™ Storage System operating controls and limits, and their bases, are provided in Section 12.3 of this FSAR.

This page intentionally left blank.

12.3 Supplemental Data

12.3.1 Technical Specifications and Bases for the FuelSolutions™ Storage System

The *technical specifications* and bases, in the Improved Technical Specification (ITS) format, are provided in this section.

This page intentionally left blank.

TECHNICAL SPECIFICATION

FOR THE FuelSolutions™ STORAGE SYSTEM

to be used concurrent with

one of the canister Technical Specifications

Amendment 4

Page

1.0 USE AND APPLICATION 1.1-1
1.1 Definitions 1.1-1
1.2 Logical Connectors 1.2-1
1.3 Completion Times 1.3-1
1.4 Frequency 1.4-1

2.0 FUNCTIONAL AND OPERATING LIMITS 2.0-1

3.0 LIMITING CONDITION FOR OPERATION (LCO) APPLICABILITY 3.0-1

3.0 SURVEILLANCE REQUIREMENT (SR) APPLICABILITY 3.0-2

3.1 CANISTER INTEGRITY 3.1-1
3.1.1 Canister Helium Backfill Density 3.1-1
3.1.2 Canister Vacuum Drying Pressure 3.1-2
3.1.3 Canister Leak Rate 3.1-3
3.1.4 Hydraulic Ram Force During Horizontal Canister Transfer 3.1-4
3.1.5 Canister Vertical Time Limit in Transfer Cask 3.1-6

3.2 CANISTER RADIATION PROTECTION 3.2-1
3.2.1 Canister Surface Contamination 3.2-1

3.3 STORAGE CASK INTEGRITY 3.3-1
3.3.1 (Deleted) . . . . . 3.3-1 |
3.3.2 Storage Cask Periodic Monitoring . . . . . 3.3-2 |
3.3.3 Storage Cask Temperatures During Horizontal Transfer . . . . . 3.3-3 |

3.4 TRANSFER CASK INTEGRITY 3.4-1
3.4.1 Transfer Cask Structural Shell Temperature 3.4-1

3.5 TRANSFER CASK RADIATION PROTECTION 3.5-1
3.5.1 Transfer Cask Surface Contamination 3.5-1

4.0 DESIGN FEATURES 4.0-1
4.1 Storage System 4.0-1
4.2 Storage Pad 4.0-3
4.3 Site Specific Parameters and Analyses 4.0-4

5.0 ADMINISTRATIVE CONTROLS 5.0-1
5.1 Training Modules 5.0-1
5.2 Preoperational Testing and Training Exercises 5.0-2
5.3 Programs 5.0-2
5.4 Special Requirements for First System in Place . . . . . 5.0-7 |

Page

LIST OF TABLES

Table 4.1-1 - FuelSolutions™ W150 Storage Cask ACI Code Requirement Compliance Summary 4.0-5

Table 4.1-2 - FuelSolutions™ W100 Transfer Cask ASME Code Requirement Compliance Summary 4.0-14

1.0 USE AND APPLICATION

1.1 Definitions

NOTE

The defined terms of this section appear in capitalized type and are applicable throughout these Technical Specifications and Bases.

Term	Definition
ACTIONS	ACTIONS shall be that part of a Specification that prescribes Required Actions to be taken under designated Conditions within specified Completion Times.
CANISTER	The CANISTER is the storage container for SFAs approved for use at the ISFSI.
INDEPENDENT SPENT FUEL STORAGE INSTALLATION (ISFSI)	The facility within the perimeter fence licensed for storage of spent fuel within CANISTERs.
INTACT FUEL	Fuel assemblies with no known or suspected cladding defects greater than hairline cracks or pinhole leaks.
LOADING OPERATIONS	LOADING OPERATIONS include all licensed activities on a CANISTER while it is being loaded with fuel assemblies. LOADING OPERATIONS begin when the first fuel assembly is placed in the CANISTER and end when the CANISTER outer closure plate to shell weld examination is complete.
SPENT FUEL ASSEMBLIES (SFAs)	Irradiated nuclear fuel assemblies that are to be placed in a CANISTER for dry storage.
SPENT FUEL STORAGE SYSTEM (SFSS)	The storage components including the CANISTER, STORAGE CASK, and TRANSFER CASK.
STORAGE CASK	The cask that provides a shielded, ventilated storage environment for the loaded CANISTER. This cask is used for TRANSFER OPERATIONS.
STORAGE OPERATIONS	STORAGE OPERATIONS include all licensed activities that are performed at the ISFSI while a CANISTER containing spent fuel is sitting inside a STORAGE CASK on a storage pad within the ISFSI.

1.1 Definitions

Term	Definition
TRANSFER CASK	The cask that is used for SFA LOADING OPERATIONS and UNLOADING OPERATIONS, and for TRANSFER OPERATIONS.
TRANSFER OPERATIONS	TRANSFER OPERATIONS include all licensed activities that are performed on a CANISTER loaded with one or more fuel assemblies when it is being moved to and from the ISFSI. For movement to the ISFSI, TRANSFER OPERATIONS begin when the CANISTER outer closure plate to shell weld inspection is complete and end when the CANISTER is in the STORAGE CASK in its storage position on the storage pad within the ISFSI. For movement from the ISFSI, TRANSFER OPERATIONS begin when the STORAGE CASK is moved and end when the CANISTER is moved into a transportation cask or the spent fuel building.
UNLOADING OPERATIONS	UNLOADING OPERATIONS include all licensed activities on a CANISTER to be unloaded of the contained fuel assemblies. UNLOADING OPERATIONS begin when the CANISTER is ready to initiate removal of the CANISTER outer closure plate and end when the last fuel assembly is removed from the CANISTER.

1.0 USE AND APPLICATION

1.2 Logical Connectors

PURPOSE

The purpose of this section is to explain the meaning of logical connectors.

Logical connectors are used in Technical Specifications (TS) to discriminate between, and yet connect, discrete Conditions, Required Actions, Completion Times, Surveillances, and Frequencies. The only logical connectors that appear in TS are AND and OR. The physical arrangement of these connectors constitutes logical conventions with specific meanings.

BACKGROUND

Several levels of logic may be used to state Required Actions. These levels are identified by the placement (or nesting) of the logical connectors and by the number assigned to each Required Action. The first level of logic is identified by the first digit of the number assigned to a Require Action and the placement of the logical connector in the first level of nesting (i.e., left justified with the number of the Required Action). The successive levels of logic are identified by additional digits of the Required Action number and by successive indentations of the logical connectors.

When logical connectors are used to state a Condition, Completion Time, Surveillance, or Frequency, only the first level of logic is used, and the logical connector is left justified with the statement of the Condition, Completion Time, Surveillance, or Frequency.

EXAMPLES

The following examples illustrate the use of logical connectors.

EXAMPLE 1.2-1

ACTIONS

CONDITION	REQUIRED ACTION	COMPLETION TIME
A. LCO not met	A.1 Verify... AND A.2 Restore...	

In this example the logical connector AND is used to indicate that when in Condition A, both Required Actions A.1 and A.2 must be completed.

EXAMPLES (continued)

EXAMPLE 1.2-2

ACTIONS

CONDITION	REQUIRED ACTION	COMPLETION TIME
A. LCO not met	A.1 Stop... OR A.2.1 Verify... AND A.2.2.1 Reduce... OR A.2.2.2 Perform... OR A.3 Remove...	

This example represents a more complicated use of logical connectors. Required Actions A.1, A.2, and A.3 are alternative choices, only one of which must be performed as indicated by the use of the logical connector OR and the left justified placement. Any one of these three Actions may be chosen. If A.2 is chosen, then both A.2.1 and A.2.2 must be performed as indicated by the logical connector AND. Required Action A.2.2 is met by performing A.2.2.1 or A.2.2.2. The indented position of the logical connector OR indicates that A.2.2.1 and A.2.2.2 are alternative choices, only one of which must be performed.

1.0 USE AND APPLICATION

1.3 Completion Times

PURPOSE	The purpose of this section is to establish the Completion Time convention and to provide guidance for its use.
BACKGROUND	Limiting Conditions for Operation (LCOs) specify the lowest functional capability or performance levels of equipment required for safe operation of the facility. The ACTIONS associated with an LCO state Conditions that typically describe the ways in which the requirements of the LCO can fail to be met. Specified with each stated Condition are Required Action(s) and Completion Time(s).
DESCRIPTION	The Completion Time is the amount of time allowed for completing a Required Action. It is referenced to the time of discovery of a situation (e.g., equipment or variable not within limits) that requires entering an ACTIONS Condition unless otherwise specified, providing the facility is in a specified condition stated in the Applicability of the LCO. Required Actions must be completed prior to the expiration of the specified Completion Time. An ACTIONS Condition remains in effect and the Required Actions apply until the Condition no longer exists or the facility is not within the LCO Applicability. Once a Condition has been entered, subsequent subsystems, components, or variables expressed in the Condition, discovered to be not within limits, will <u>not</u> result in separate entry into the Condition unless specifically stated. The Required Actions of the Condition continue to apply to each additional failure, with Completion Times based on initial entry into the Condition.

EXAMPLES

The following examples illustrate the use of Completion Times with different types of Conditions and changing Conditions.

EXAMPLE 1.3-1

ACTIONS

CONDITION	REQUIRED ACTION	COMPLETION TIME
B. Required Action and associated Completion Time not met.	B.1 Perform Action B.1. AND B.2 Perform Action B.2.	12 hours 36 hours

Condition B has two Required Actions. Each Required Action has its own separate Completion Time. Each Completion Time is referenced to the time that Condition B is entered.

The Required Actions of Condition B are to complete action B.1 within 12 hours AND complete action B.2 within 36 hours. A total of 12 hours is allowed for completing action B.1 and a total of 36 hours (not 48 hours) is allowed for completing action B.2 from the time that condition B was entered. If action B.1 is completed within 6 hours, the time allowed for completing action B.2 is the next 30 hours because the total time allowed for completing action B.2 is 36 hours.

EXAMPLES
(continued)

EXAMPLE 1.3-2

ACTIONS

CONDITION	REQUIRED ACTION	COMPLETION TIME
A. One system not within limit.	A.1 Restore system to within limit.	7 days
B. Required Action and associated Completion Time not met.	B.1 Perform Action B.1. AND B.2 Perform Action B.2.	12 hours 36 hours

When it is determined that a system does not meet the LCO, Condition A is entered. If the system is not restored within 7 days, Condition B is also entered and the Completion Time clocks for Required Actions B.1 and B.2 start. If the system is restored after Condition B is entered, Condition A and B are exited, and therefore, the Required Actions of Condition B may be terminated.

EXAMPLES (continued)

EXAMPLE 1.3-3

ACTIONS

NOTE

Separate Condition entry is allowed for each component.

CONDITION	REQUIRED ACTION	COMPLETION TIME
A. LCO not met.	A.1 Restore compliance with LCO.	4 hours
B. Required Action and associated Completion Time not met.	B.1 Perform Action B.1. AND B.2 Perform Action B.2.	12 hours 36 hours

The Note above the ACTIONS Table is a method of modifying the Completion Time tracking. If this method of modifying the Completion Time tracking were only applicable to a specific Condition, the Note would appear in that Condition rather than at the top of the ACTIONS Table.

The Note allows Condition A to be entered separately for each component, and Completion Times tracked on a per component basis. When a component does not meet the LCO, Condition A is entered and its Completion Time starts. If it is determined that subsequent components do not meet the LCO, Condition A is entered for each component and separate Completion Times start and are tracked for each component.

IMMEDIATE COMPLETION TIME

When "Immediately" is used as a Completion Time, the Required Action should be pursued without delay and in a controlled manner.

1.0 USE AND APPLICATION

1.4 Frequency

PURPOSE	The purpose of this section is to define the proper use and application of Frequency requirements.
DESCRIPTION	Each Surveillance Requirement (SR) has a specified Frequency in which the surveillance must be met in order to meet the associated Limiting Condition for Operation (LCO). An understanding of the correct application of the specified Frequency is necessary for compliance with the SR. The "specified Frequency" is referred to throughout this section and each of the Specifications of Section 3.0, Surveillance Requirement (SR) Applicability. The "specified Frequency" consists of the requirements of the Frequency column of each SR, as well as certain Notes in the Surveillance column that modify performance requirements. Situations where a Surveillance could be required (i.e., its Frequency could expire), but where it is not possible or not desired that it be performed until sometime after the associated LCO is within its Applicability, represent potential SR 3.0.4 conflicts. To avoid these conflicts, the SR (i.e., the Surveillance or the Frequency) is stated such that it is only "required" when it can be and should be performed. With an SR satisfied, SR 3.0.4 imposes no restriction. The use of "met" or "performed" in these instances conveys specific meaning. A Surveillance is "met" only when the acceptance criteria are satisfied. Known failure of the requirements of a Surveillance, even without a Surveillance specifically being "performed," constitutes a Surveillance not "met."

EXAMPLES

The following examples illustrate the various ways that Frequencies are specified:

EXAMPLE 1.4-1

SURVEILLANCE REQUIREMENTS

SURVEILLANCE	FREQUENCY
Verify pressure within limit.	12 hours

Example 1.4-1 contains the type of SR most often encountered in the Technical Specifications (TS). The Frequency specifies an interval (12 hours) during which the associated Surveillance must be performed at least one time. Performance of the Surveillance initiates the subsequent interval. Although the Frequency is stated as 12 hours, an extension of the time interval to 1.25 times the interval specified in the Frequency is allowed by SR 3.0.2 for operational flexibility. The measurement of this interval continues at all times, even when the SR is not required to be met per SR 3.0.1 (such as when it is determined the equipment does not meet the LCO, a variable is outside specified limits, or the unit is outside the Applicability of the LCO). If the interval specified by SR 3.0.2 is exceeded while the cask is in a condition specified in the Applicability of the LCO, the LCO is not met in accordance with SR 3.0.1.

If the interval as specified by SR 3.0.2 is exceeded while the unit is not in a condition specified in the Applicability of the LCO for which performance of the SR is required, the Surveillance must be performed within the Frequency requirements of SR 3.0.2 prior to entry into the specified condition. Failure to do so would result in a violation of SR 3.0.4.

EXAMPLES
(continued)

EXAMPLE 1.4-2

SURVEILLANCE REQUIREMENTS

SURVEILLANCE	FREQUENCY
Verify flow is within limits.	Once within 12 hours prior to starting activity AND 24 hours thereafter

Example 1.4-2 has two Frequencies. The first is a one-time performance Frequency, and the second is of the type shown in Example 1.4-1. The logical connector "AND" indicates that both Frequency requirements must be met. Each time the example activity is to be performed, the Surveillance must be performed prior to starting the activity.

The use of "once" indicates a single performance will satisfy the specified Frequency (assuming no other Frequencies are connected by "AND"). This type of Frequency does not qualify for the 25% extension allowed by SR 3.0.2.

"Thereafter" indicates future performances must be established per SR 3.0.2, but only after a specified condition is first met (i.e., the "once" performance in this example). If the specified activity is canceled or not performed, the measurement of both intervals stops. New intervals start upon preparing to restart the specified activity.

2.0 FUNCTIONAL AND OPERATING LIMITS

See each individual CANISTER Technical Specification for the applicable functional and operating limits.

3.0 LIMITING CONDITION FOR OPERATION (LCO) APPLICABILITY

LCO 3.0.1	LCOs shall be met during specified conditions in the Applicability, except as provided in LCO 3.0.2.
LCO 3.0.2	Upon discovery of a failure to meet an LCO, the Required Actions of the associated Conditions shall be met, except as provided in LCO 3.0.5. If the LCO is met or is no longer applicable prior to expiration of the specified Completion Time(s), completion of the Required Action(s) is not required, unless otherwise stated.
LCO 3.0.3	Not applicable to an SFSS.
LCO 3.0.4	When an LCO is not met, entry into a specified condition in the Applicability shall not be made except when the associated ACTIONS to be entered permit continued operation in the specified condition in the Applicability for an unlimited period of time. This Specification shall not prevent changes in specified conditions in the Applicability that are required to comply with ACTIONS or that are related to the unloading of a CANISTER. Exceptions to this Specification are stated in the individual Specifications. These exceptions allow entry into specified conditions in the Applicability when the associated ACTIONS to be entered allow operation in the specified condition in the Applicability only for a limited period of time.
LCO 3.0.5	Equipment removed from service or not in service in compliance with ACTIONS may be returned to service under administrative control solely to perform testing required to demonstrate it meets the LCO or that other equipment meets the LCO. This is an exception to LCO 3.0.2 for the system returned to service under administrative control to perform the testing.
LCO 3.0.6	Not applicable to an SFSS.
LCO 3.0.7	Not applicable to an SFSS.

3.0 SURVEILLANCE REQUIREMENT (SR) APPLICABILITY

SR 3.0.1	SRs shall be met during the specified conditions in the Applicability for individual LCOs, unless otherwise stated in the SR. Failure to meet a Surveillance, whether such failure is experienced during the performance of the Surveillance or between performances of the Surveillance, shall be failure to meet the LCO. Failure to perform a Surveillance within the specified Frequency shall be failure to meet the LCO except as provided in SR 3.0.3. Surveillances do not have to be performed on equipment or variables outside specified limits.
SR 3.0.2	The specified Frequency for each SR is met if the Surveillance is performed within 1.25 times the interval specified in the Frequency, as measured from the previous performance or a measured from the time a specified condition of the Frequency is met. For Frequencies specified as "once," the above interval extension does not apply. If a Completion Time requires periodic performance on a "once per…" basis, the above Frequency extension applies to each performance after the initial performance. Exceptions to this Specification are stated in the individual Specifications.
SR 3.0.3	If it is discovered that a Surveillance was not performed within its specified Frequency, then compliance with the requirement to declare the LCO not met may be delayed, from the time of discovery, up to 24 hours or up to the limit of the specified Frequency, whichever is less. This delay period is permitted to allow performance of the Surveillance. If the Surveillance is not performed within the delay period, the LCO must immediately be declared not met, and the applicable Condition(s) must be entered. When the Surveillance is performed within the delay period and the Surveillance is not met, the LCO must immediately be declared not met, and the applicable Condition(s) must be entered.
SR 3.0.4	Entry into a specified condition in the Applicability of an LCO shall not be made unless the LCO's Surveillances have been met within their specified Frequency. This provision shall not prevent entry into specified conditions in the Applicability that are required to comply with ACTIONS or that are related to the unloading of a CANISTER.

3.1 CANISTER INTEGRITY

3.1.1 Canister Helium Backfill Density

See each individual CANISTER Technical Specification for the applicable LCO.

3.1 CANISTER INTEGRITY

3.1.2 Canister Vacuum Drying Pressure

LCO 3.1.2 The CANISTER cavity vacuum pressure following drying shall be ≤3 torr, maintained for at least 30 minutes.

APPLICABILITY: During LOADING OPERATIONS.

ACTIONS

NOTE

Separate Condition entry is allowed for each CANISTER.

CONDITION	REQUIRED ACTION	COMPLETION TIME
A. CANISTER cavity vacuum pressure limit not met.	A.1 Establish CANISTER cavity vacuum pressure within the limit in accordance with the vacuum drying program.	7 days.
B. Required Action and Associated Completion Time not met.	B.1 Remove all fuel assemblies from the CANISTER.	30 days.

SURVEILLANCE REQUIREMENTS

SURVEILLANCE		FREQUENCY
SR 3.1.2.1	Verify that the CANISTER cavity vacuum pressure following drying is within the limit.	Prior to continuing LOADING OPERATIONS.

3.1 CANISTER INTEGRITY

3.1.3 Canister Leak Rate

LCO 3.1.3 The CANISTER leak rate for the inner closure plate to CANISTER shell weld, and the inner closure plate to drain and vent port body welds shall not exceed 8.52 x 10^{-6} ref-cc/sec.

APPLICABILITY: During LOADING OPERATIONS.

ACTIONS

NOTE

Separate Condition entry is allowed for each CANISTER.

CONDITION	REQUIRED ACTION	COMPLETION TIME
A. CANISTER leak rate limit is not met.	A.1 Establish CANISTER leak rate within limit.	96 hours.
B. Required Action and associated Completion Time are not met.	B.1 Remove all fuel assemblies from CANISTER.	30 days.

SURVEILLANCE REQUIREMENTS

SURVEILLANCE		FREQUENCY
SR 3.1.3.1	Verify CANISTER leak rate is within limit.	Within 48 hours after verifying CANISTER vacuum pressure during drying within limit per LCO 3.1.2.

3.1 CANISTER INTEGRITY

3.1.4 Hydraulic Ram Force During Horizontal Canister Transfer

LCO 3.1.4 The ram force on the CANISTER during horizontal transfer shall not exceed 70,000 pounds pushing or 50,000 pounds pulling.

APPLICABILITY: During TRANSFER OPERATIONS

ACTIONS

NOTE

Separate Condition entry is allowed for each CANISTER.

CONDITION	REQUIRED ACTION	COMPLETION TIME
A. Hydraulic ram force limit on CANISTER is not met.	A.1 Initiate action to stop horizontal transfer.	Immediately.
	AND	
	A.2 Move CANISTER back to cask from which it was being transferred.	7 days.
	AND	
	A.3 Check STORAGE CASK rails for proper installation and damage.	Prior to proceeding with TRANSFER OPERATIONS.
	AND	
	A.4 Verify alignment.	Prior to proceeding with TRANSFER OPERATIONS.

3.1.4 Hydraulic Ram Force During Horizontal Canister Transfer

SURVEILLANCE REQUIREMENTS

SURVEILLANCE		FREQUENCY
SR 3.1.4.1	Verify hydraulic ram force on CANISTER is within limit.	Continuously during horizontal TRANSFER OPERATIONS when transferring CANISTER between TRANSFER CASK and STORAGE CASK.

3.1 CANISTER INTEGRITY

3.1.5 Canister Vertical Time Limit in Transfer Cask

See each individual CANISTER Technical Specification for the applicable LCO.

3.2 CANISTER RADIATION PROTECTION

3.2.1 Canister Surface Contamination

LCO 3.2.1 The non-fixed (removable) radioactive contamination for the accessible external surfaces of a CANISTER shall not exceed:

a. 1,000 dpm/100 cm^2 for beta-gamma sources.

b. 20 dpm/100 cm^2 for alpha sources.

APPLICABILITY: During LOADING OPERATIONS.

ACTIONS

NOTE

Separate Condition entry is allowed for each CANISTER.

CONDITION	REQUIRED ACTION	COMPLETION TIME
A. Surface contamination limits are not met.	A.1 Establish CANISTER surface contamination within limit.	7 days.
B. Required Action and associated Completion Time are not met.	B.1 Determine the cause for the failure to meet Condition A, initiate actions to correct the cause, and establish the accessible CANISTER surface contamination within limit.	Prior to TRANSFER OPERATIONS.

SURVEILLANCE REQUIREMENTS

SURVEILLANCE		FREQUENCY
SR 3.2.1.1	Verify that the removable contamination on the accessible exterior surface of the CANISTER containing fuel assemblies is within limits.	Within 4 hours before TRANSFER OPERATIONS.

3.3 STORAGE CASK INTEGRITY

3.3.1 (Deleted)

3.3 STORAGE CASK INTEGRITY

3.3.2 Storage Cask Periodic Monitoring

See each individual CANISTER Technical Specification for the applicable LCO.

3.3 STORAGE CASK INTEGRITY

3.3.3 Storage Cask Temperatures During Horizontal Transfer

See each individual CANISTER Technical Specification for the applicable LCO.

3.4 TRANSFER CASK INTEGRITY

3.4.1 Transfer Cask Structural Shell Temperature

LCO 3.4.1 The temperature of the TRANSFER CASK, as detected by a permanently installed thermocouple mounted on the TRANSFER CASK structural shell (inside the neutron shield), shall remain above 40°F (4°C) when the ambient air temperature is below 32°F (0°C).

APPLICABILITY: During TRANSFER OPERATIONS.

ACTIONS

CONDITION	REQUIRED ACTION	COMPLETION TIME
A. TRANSFER CASK temperature limit is not met.	A.1 Establish TRANSFER CASK temperature within the limit.	2 hours.
B. Required Action and associated Completion Time are not met.	B.1 Move TRANSFER CASK to plant's fuel building or other heated area.	4 hours.
	AND	
	B.2 If CANISTER loaded with fuel is in TRANSFER CASK, fill annulus with water.	24 hours.
	AND	
	B.3 Inspect TRANSFER CASK liquid neutron shield and expansion tank for damage.	24 hours.
	AND	
	B.4 If TRANSFER CASK is damaged, repair as required.	7 days.

3.4.1 Transfer Cask Structural Shell Temperature

SURVEILLANCE REQUIREMENTS

SURVEILLANCE		FREQUENCY
SR 3.4.1.1	Verify TRANSFER CASK structural shell temperature within the limit.	Once after the TRANSFER CASK with a CANISTER containing fuel assemblies has been downended on the horizontal transfer skid and moved outside the plant's fuel building, or a loaded CANISTER has been retrieved from a STORAGE CASK or transportation cask. AND Every 1 hour thereafter during TRANSFER OPERATIONS.

3.5 TRANSFER CASK RADIATION PROTECTION

3.5.1 Transfer Cask Surface Contamination

LCO 3.5.1 The non-fixed (removable) radioactive contamination for the accessible surfaces of a TRANSFER CASK when the TRANSFER CASK is outside the plant's fuel building for horizontal TRANSFER OPERATIONS shall not exceed:

a. 1,000 dpm/100 cm^2 for beta-gamma sources

b. 20 dpm/100 cm^2 for alpha sources

APPLICABILITY: During TRANSFER OPERATIONS.

ACTIONS

CONDITION	REQUIRED ACTION	COMPLETION TIME
A. Surface contamination limits are not met.	A.1 Establish TRANSFER CASK surface contamination within limit.	7 days.
B. Required Action and associated Completion Time are not met.	B.1 Determine the cause for the failure to meet Condition A, initiate actions to correct the cause, and establish the TRANSFER CASK surface contamination within limit.	Prior to TRANSFER OPERATIONS.

SURVEILLANCE REQUIREMENTS

SURVEILLANCE		FREQUENCY
SR 3.5.1.1	Verify that the removable contamination on the accessible surfaces of the TRANSFER CASK is within limits.	Prior to moving the TRANSFER CASK outside the fuel building during horizontal TRANSFER OPERATIONS.

4.0 DESIGN FEATURES

The specifications in this section include the design characteristics of special importance to each of the physical barriers and the maintenance of safety margins in the storage system component design. The principal objective of this category is to describe the design envelope which might constrain any physical changes to essential equipment. Included in this category are the site environmental parameters which provide the bases for design, but are not inherently suited for description as LCOs.

4.1 Storage System

4.1.1 Storage Cask

4.1.1.1 Structural Performance

The STORAGE CASK has been evaluated for a tip-over during handling (equivalent to a side drop of 28 *g*) and a bottom end drop resulting in an axial gravitational (*g*) loading of 89 *g*.

The STORAGE CASK factors of safety due to Design Basis Earthquake (DBE) and all associated load combinations have been evaluated for all possible modes of failure. The DBE peak accelerations are defined as 0.25 *g* in two orthogonal horizontal directions and 0.25 *g* in the vertical direction.

4.1.1.2 Codes and Standards

The FuelSolutions™ W150 STORAGE CASK is designed in accordance with ACI 349 and fabricated in accordance with ACI 318. Exceptions to these codes are listed in Table 4.1-1.

4.1.1.3 Fabrication Exceptions to Codes, Standards, and Criteria

Proposed alternatives to ACI 318, including exceptions allowed by Section 4.1.1.2, may be used when authorized by the Director of the Office of Nuclear Material Safety and Safeguards or Designee. The applicant should demonstrate that:

1. The proposed alternatives would provide an acceptable level of quality and safety, or
2. Compliance with the specified requirements of ACI 318, would result in hardship or unusual difficulty without a compensating increase in the level of quality and safety.

Requests for exception in accordance with this section should be submitted in accordance with 10CFR72.4.

4.1.2 Transfer Cask

4.1.2.1 Structural Performance

The TRANSFER CASK has been evaluated for a side drop resulting in a lateral gravitational loading of 60 *g*.

The TRANSFER CASK factors of safety due to Design Basis Earthquake (DBE) and all associated load combinations have been evaluated for all possible modes of failure. The DBE peak accelerations are defined as 0.25 *g* in two orthogonal horizontal directions and 0.25 *g* in the vertical direction.

4.1.2.2 Codes and Standards

The FuelSolutions™ W100 TRANSFER CASK is designed in accordance with Subsection NF of the ASME Code. Exceptions to the code are listed in Table 4.1-2.

4.1.2.3 Fabrication Exceptions to Codes, Standards, and Criteria

Proposed alternatives to Subsection NF of the ASME Code, including exceptions allowed by Section 4.1.2.2, may be used when authorized by the Director of the Office of Nuclear Material Safety and Safeguards or Designee. The applicant should demonstrate that:

1. The proposed alternatives would provide an acceptable level of quality and safety, or
2. Compliance with the specified requirements of ASME Code, Section III, would result in hardship or unusual difficulty without a compensating increase in the level of quality and safety.

Requests for exception in accordance with this section should be submitted in accordance with 10CFR72.4.

4.1.3 Canister

4.1.3.1 Criticality

See each individual CANISTER Technical Specification Section 4.1.3.1 for discussion of CANISTER criticality control features.

4.1.3.2 Structural Performance

See each individual CANISTER Technical Specification Section 4.1.3.2 for discussion of CANISTER structural performance features.

4.1.3.3 Codes and Standards

See each individual CANISTER Technical Specification Section 4.1.3.3 for discussion of codes and standards applicable to the CANISTER.

4.1.3.4 Fabrication Exceptions to Codes, Standards, and Criteria

See each individual CANISTER Technical Specification Section 4.1.3.4 for discussion of exceptions to codes, standards, and criteria.

4.2 Storage Pad

4.2.1 Storage Location for Storage Casks

Each STORAGE CASK is designed to radiate sufficient heat when placed on the storage pad in the appropriate location. Thermal analyses of normal STORAGE OPERATIONS (Storage System FSAR, Section 4.4) assume that the casks will be stored in an array that places adjacent casks a minimum of 15 feet apart, center-to-center. This minimum spacing is an important parameter to the proper dissipation of radiant heat energy from the cask.

4.2.2 Pad Properties to Limit Cask Gravitational Loadings Due to Postulated Drops

4.2.2.1 Storage Cask

The FuelSolutions™ W150 STORAGE CASK has been evaluated for an end drop onto a reinforced concrete pad. The evaluations are based on the following parameters:

Concrete thickness (inches, max.)	24	30	36
Maximum Reinforcing Steel (EWEF)	#8 @ 18"	#9 @ 18"	#8 @ 12"
Nominal concrete 28 day compressive strength (psi)	3,000	3,000	3,000
Nominal reinforcement yield strength (psi)	60,000	60,000	60,000
Soil effective modulus of elasticity (psi, max.)	30,000	20,000	10,000
Drop height (inches, max.)	36	36	36

Any site-specific pad design with parameters that differ from those listed must be evaluated by the licensee to confirm that the design basis deceleration loads for the storage cask and canister are not exceeded. This evaluation must be performed using the same methodology as described in WSNF-200 FSAR, Section 3.7.3.1.

4.2.2.2 Transfer Cask

The FuelSolutions™ W100 Transfer Cask has been evaluated for a side drop onto a reinforced concrete pad. The evaluations are based on the following parameters:

Concrete thickness (inches, max.)	24
Minimum pad size	30' x 50'
Maximum Reinforcing Steel (EWEF)	#8 @ 18"

Nominal concrete 28 day compressive strength (psi)	3,000
Nominal reinforcement yield strength (psi)	60,000
Soil effective modulus of elasticity (psi, max.)	15,000
Drop height (inches, max.)	72

Any site-specific pad design with parameters that differ from those listed must be evaluated by the licensee to confirm that the design basis deceleration loads for the transfer cask and canister are not exceeded. This evaluation must be performed using the same methodology as described in WSNF-200 FSAR, Section 3.7.5.1.

4.3 Site Specific Parameters and Analyses

The minimum site-specific parameters and analyses that will need verification by the system user are:

4.3.1 Fire and Explosion

The potential for fire and explosion shall be addressed, based on site-specific considerations. This includes the condition that the on-site transporter fuel tank will contain no more than 70 gallons of fuel.

For the purpose of providing the licensee with design basis loading criteria for comparison to site-specific hazards, a postulated explosion is taken to be the same as the tornado wind pressure load defined in Section 2.3.4.2 of the Storage System FSAR (WSNF-200).

4.3.2 Engineered Features

In cases where engineered features (i.e., berms, shield walls) are used to ensure that the requirements of 10CFR72.104(a) are met, such features are to be considered important to safety and must be evaluated to determine the applicable Quality Assurance Category.

Table 4.1-1 - FuelSolutions™ W150 Storage Cask ACI Code Requirement Compliance Summary (9 Pages)

Item	ACI Requirement	Issue	Alternative Compliance Basis
ACI 349:			
1	**General for ACI 349**	The use of the term "Owner" does not apply.	Where the term "Owner" is used, the FuelSolutions™ SFMS licensee, BNG Fuel Solutions (BFS), should be substituted.
2	**General for Chapter 1 - "General Requirements"**	References to "construction" do not apply.	Refer to ACI 318.
3	**1.1 - "Scope:"** "This Code provides the minimum requirements for the design and construction of nuclear safety related concrete structures and structural elements for nuclear power generating stations."	The FuelSolutions™ W150 Storage Cask will not be constructed as a 10CFR50, Appendix B, "safety related" component.	The FuelSolutions™ W150 Storage Cask will be constructed based on a 10CFR72 "graded quality" approach.

Table 4.1-1 - FuelSolutions™ W150 Storage Cask ACI Code Requirement Compliance Summary (9 Pages)

Item	ACI Requirement	Issue	Alternative Compliance Basis
4	**1.2 - "Drawings and Calculations:"** "1.2.1 - Copies of structural drawings, typical details, and specifications for all reinforced concrete construction shall be signed by a licensed engineer and shall be retained by the Owner, or his designee, as a permanent record for the life of the structure. These drawings, details, and specifications shall show . . . provisions for dimensional changes resulting from creep, shrinkage, and temperatures; . . . and loads used in the design."	1. The FuelSolutions™ W150 Storage Cask drawings, typical details, and specifications will not necessarily be signed by a licensed engineer. 2. Provisions for dimensional changes will not be specifically addressed on structural drawings. 3. Loads used in the design will not be shown on drawings, typical details, or specifications.	1. Licensed engineer certification of drawings, typical details, and specifications is not typically provided for components licensed under 10CFR72. 2. Finished storage cask will meet dimensional inspection requirements provided in this FSAR. 3. Loads used in the design are presented in this FSAR.
5	1.3 - "Inspection"	This section does not apply.	Refer to ACI 318.

Table 4.1-1 - FuelSolutions™ W150 Storage Cask ACI Code Requirement Compliance Summary (9 Pages)

Item	ACI Requirement	Issue	Alternative Compliance Basis
6	**1.5 - "Quality Assurance Program:"** "A quality assurance program covering nuclear safety related structures shall be developed prior to starting any work. The general requirements and guidelines for establishing and executing the quality assurance program during the design and construction phases of nuclear power generating stations are established by Title 10 of the Code of Federal Regulations, Part 50 (10CFR50), Appendix B."	The construction of the FuelSolutions™ W150 Storage Cask will not be governed by a 10CFR50, Appendix B, QA program.	The construction of the FuelSolutions™ W150 Storage Cask will be governed by a 10CFR72, Subpart G, QA program.

Table 4.1-1 - FuelSolutions™ W150 Storage Cask ACI Code Requirement Compliance Summary (9 Pages)

Item	ACI Requirement	Issue	Alternative Compliance Basis
7	**Chapter 3 - "Materials"**	Sections 3.1, 3.2.3, 3.3.4, 3.5.3.2, 3.6.7, and 3.7 do not apply.	Refer to ACI-318, Sections 3.1 and 3.7. ACI 349 Sections 3.2.3, 3.3.4, 3.5.3.2, and 3.6.7 pertain to testing frequencies that are not provided in ACI 318. These frequencies will be established to be consistent with the graded quality category of the item as addressed under the BFS QA Program.
7 (cont.)	**Section 3.8 - "Standards Cited in this Code"**	Different editions of the ASTM standards listed may be used in the construction of a FuelSolutions™ W150 Storage Cask.	Materials and testing will be to the ASTM standard cited in ACI 349 and ACI 318, except that the year of the ASTM standard may be as cited in ACI 318-95 or the latest ASTM standard issued.
8	**Chapter 4 - "Concrete Quality"**	With the exception of Section 4.1.4, this chapter does not apply.	Refer to ACI 318, Chapter 4.

Table 4.1-1 - FuelSolutions™ W150 Storage Cask ACI Code Requirement Compliance Summary (9 Pages)

Item	ACI Requirement	Issue	Alternative Compliance Basis
9	**Chapter 5 - "Mixing and Placing Concrete"**	This chapter does not apply.	Refer to ACI 318, Chapter 5.
10	**Chapter 6 - "Formwork, Embedded Pipes, and Construction Joints"**	With the exception of Sections 6.3.7(k) and 6.3.8, this chapter does not apply.	Refer to ACI 318, Chapter 6
11	**9.1.1.2 - "Severe Environmental Loads"** **9.1.1.3 - "Extreme Environmental Loads"**	These load definitions are not used in the design of the FuelSolutions™ W150 Storage Cask.	Load definitions from NUREG-1536 are used in the design of the FuelSolutions™ W150 Storage Cask.
12	**9.2 - "Required Strength:"** 9.2.1 - "The required strength *U* shall be at least equal to the greatest of the following: *... (load combination no's. 1 - 11)*"	The FuelSolutions™ W150 Storage Cask design does not use load combinations from ACI 349.	The FuelSolutions™ W150 Storage Cask design uses load combinations from ANSI/ANS 57.9, as modified by NUREG-1536.
13	**Chapter 13 - "Two-Way Slab Systems"**	Not applicable.	
14	**Chapter 15 - "Footings"**	Not applicable.	

Table 4.1-1 - FuelSolutions™ W150 Storage Cask ACI Code Requirement Compliance Summary (9 Pages)

Item	ACI Requirement	Issue	Alternative Compliance Basis
15	**16.2 - "Design:"** "16.2.1 - Design of precast members shall consider loading and restraint conditions from initial fabrication to completion of the structure, including form removal, storage, transportation, and erection."	The FuelSolutions™ W150 Storage Cask design does not explicitly address transportation loads on precast sections.	Off-normal operating condition transportation loads are assumed to be bounded by postulated accident condition side drop loads.
16	**Chapter 17 - "Composite Concrete Flexural Members"**	Not applicable.	
17	**Chapter 18 - "Prestressed Concrete"**	Not applicable.	
18	**Chapter 19 - "Shells and Folded Plate Members"**	Not applicable.	
19	**Appendix A - "Thermal Considerations"**	A FuelSolutions™ W150 Storage Cask may be exposed to conditions (accident fire) not within the scope of ACI 349.	Short-term material temperature limits for accident fire are defined in this FuelSolutions™ Storage System FSAR.

Table 4.1-1 - FuelSolutions™ W150 Storage Cask ACI Code Requirement Compliance Summary (9 Pages)

Item	ACI Requirement	Issue	Alternative Compliance Basis
20	**Appendix B - "Steel Embedments"**	Load combinations are only required to meet ACI 349 requirements.	Load combinations and variation requirements will meet both ACI 349 and ANSI/ANS 57.9.
21	**Appendix C - "Special Provisions for Impulsive ad Impactive Effects"**	Load combinations are only required to meet ACI 349 requirements.	Load combinations and variation requirements will meet both ACI 349 and ANSI/ANS 57.9.
ACI 318:			
22	**Chapter 1 - "General Requirements"**	With the exception of Section 1.3, this chapter does not apply.	Refer to ACI 349.
23	**Chapter 2 - "Definitions"**	This chapter does not apply.	Refer to ACI 349.
24	**Chapter 3 - "Materials"**	With the exception of Sections 3.1 and 3.7, this chapter does not apply.	See Item 7.
25	**Chapter 7 - "Details of Reinforcement"**	This chapter does not apply.	Refer to ACI 349.
26	**Chapter 8 - "Analysis and Design - General Considerations"**	This chapter does not apply.	Refer to ACI 349.

Table 4.1-1 - FuelSolutions™ W150 Storage Cask ACI Code Requirement Compliance Summary (9 Pages)

Item	ACI Requirement	Issue	Alternative Compliance Basis
27	**Chapter 9 - "Strength and Serviceability Requirements"**	This chapter does not apply.	Refer to ACI 349.
28	**Chapter 10 - "Flexure and Axial Loads"**	This chapter does not apply.	Refer to ACI 349.
29	**Chapter 11 - "Shear and Torsion"**	This chapter does not apply.	Refer to ACI 349.
30	**Chapter 12 - "Development and Splices of Reinforcement"**	This chapter does not apply.	Refer to ACI 349.
31	**Chapter 13 - "Two-Way Slab Systems"**	Not applicable.	
32	**Chapter 14 - "Walls"**	This chapter does not apply.	Refer to ACI 349.
33	**Chapter 15 - "Footings"**	Not applicable.	
34	**Chapter 16 - "Precast Concrete"**	This chapter does not apply.	Refer to ACI 349.
35	**Chapter 17 - "Composite Concrete Flexural Members"**	Not applicable.	
36	**Chapter 18 - "Prestressed Concrete"**	Not applicable.	

Table 4.1-1 - FuelSolutions™ W150 Storage Cask ACI Code Requirement Compliance Summary (9 Pages)

Item	ACI Requirement	Issue	Alternative Compliance Basis
37	**Chapter 19 - "Shells and Folded Plate Members"**	Not applicable.	
38	**Chapter 20 - "Strength Evaluation of Existing Structures"**	Not applicable.	
39	**Chapter 21 - "Special Provisions for Seismic Design"**	Not applicable.	
40	**Chapter 22 - "Structural Plain Concrete"**	Not applicable.	
41	**Appendix A - "Alternate Design Method"**	This chapter does not apply.	Refer to ACI 349.
42	**Appendix B - "Unified Design Provisions for Reinforced and Prestressed Concrete Flexural and Compression Members"**	This chapter does not apply.	Refer to ACI 349.
43	**Appendix C - "Alternative Loads and Strength Reduction Factors"**	This chapter does not apply.	Refer to ACI 349.

Table 4.1-2 - FuelSolutions™ W100 Transfer Cask ASME Code Requirement Compliance Summary (14 Pages)

Item	ASME Code Requirement	Issue	Alternative Compliance Basis
Section III, Subsection NCA:			
1	**General for Subsection NCA**	1. The terms "Certificate Holder" and "Owner" used throughout this subsection are not applicable for a 10CFR72 system. 2. The Division 2 (concrete) requirement provided throughout this subsection are not applicable for a 10CFR72 system.	1. BNG Fuel Solutions (BFS) bears the responsibilities associated with a "Certificate Holder" or "Owner" relative to the FuelSolutions™ SFMS. 2. This compliance summary table only addresses FuelSolutions™ W100 Transfer Casks, which do not contain any concrete.
2	**NCA-1140, "Use of Code Editions, Addenda, and Cases:"** "(a)(1) Under the rules of this Section, the Owner or his designees shall establish the Code Edition and Addenda to be included in the Design Specifications . . ."	The FuelSolutions™ SFMS documentation does not include an ASME Code Design Specification.	The requirements and criteria typically contained in an ASME Code Design Specification are contained in this FSAR.

Table 4.1-2 - FuelSolutions™ W100 Transfer Cask ASME Code Requirement Compliance Summary (14 Pages)

Item	ASME Code Requirement	Issue	Alternative Compliance Basis
3	**NCA-1210, "Components:"** "Each component of a nuclear power plant shall require a Design Specification (NCA-3250), Design Report (NCA-3350, NCA-3550), and other design documents specified in NCA-3800. Data Reports and stamping shall be as required in NCA-8000."	The FuelSolutions™ SFMS documentation does not contain the following ASME Code documents: 1. Design Specification 2. Design Report 3. Owner's Certificate of Authorization 4. Authorized Inspection Agency written agreement 5. Owner's Data Report 6. Overpressure Protection Report	1. See Item 2. 2. The information typically reported in an ASME Code Design Report is contained in this FSAR. 3. An Owner's Certificate of Authorization, a written agreement with an Authorized Inspection Agency, an Owner's Data Report, and an Overpressure Protection Report are not typically provided for components licensed under 10CFR72.

Table 4.1-2 - FuelSolutions™ W100 Transfer Cask ASME Code Requirement Compliance Summary (14 Pages)

Item	ASME Code Requirement	Issue	Alternative Compliance Basis
4	**NCA-1220, "Materials"**	Not all non-pressure retaining materials specified in the FuelSolutions™ W100 Transfer Cask FSAR are listed as ASME Code Section III materials.	FuelSolutions™ W100 Transfer Casks will be purchased, identified, controlled, and manufactured using a graded quality approach in accordance with the NRC-approved BFS Quality Assurance Program based on NQA-1, NRC Regulatory Guide 7.10, and NUREG/CR-6407 criteria.
5	**NCA-1281, "Activities and Requirements:"** "... Data Reports and stamping shall be as required in NCA-8000."	See Item 19.	See Item 19.
6	**NCA-2000, "Classification of Components"**	The classification of components is usually provided in a Design Specification.	See Item 2.

Table 4.1-2 - FuelSolutions™ W100 Transfer Cask ASME Code Requirement Compliance Summary (14 Pages)

Item	ASME Code Requirement	Issue	Alternative Compliance Basis
7	**NCA-2142, "Establishment of Design, Service, and Test Loadings and Limits:"** "In the Design Specification, the Owner or his designee shall identify the loadings and combinations of loadings and establish the appropriate Design, Service, and Test Limits for each component or support . . ."	See Item 2.	See Item 2.
8	**NCA-3100, "General"**	ASME Code accreditation does not apply.	See Item 1.
9	**NCA-3200, "Owner's Responsibilities"**	An Owner's responsibilities under ASME Code do not apply.	An Owner's Certificate of Authorization, a Design Specification, a Design Report, an Overpressure Protection Report, and an Owner's Data Report are not typically provided for components licensed under 10CFR72.
10	**NCA-3300, "Responsibilities of a Designer - Division 2"**	See Item 1.	See Item 1.

Table 4.1-2 - FuelSolutions™ W100 Transfer Cask ASME Code Requirement Compliance Summary (14 Pages)

Item	ASME Code Requirement	Issue	Alternative Compliance Basis
11	**NCA-3400, "Responsibilities of an N Certificate Holder - Division 2"**	See Item 1.	See Item 1.
12	**NCA-3500, "Responsibilities of an N Certificate Holder - Division 1"**	See Item 1.	See Item 1. Design and fabrication requirements are provided in this FSAR and related procurement/fabrication drawings and specifications.
13	**NCA-3600, "Responsibilities of an NPT Certificate Holder"**	See Item 1.	See Item 12.
14	**NCA-3700, "Responsibilities of an NA Certificate Holder"**	See Item 1.	See Item 12.
15	**NCA-3800, "Metallic Material Organization's Quality System Program"**	Materials for a FuelSolutions™ W100 Transfer Cask may be purchased from suppliers that are not certified per the requirements of NCA-3800.	Material suppliers will be qualified per NCA-3800 or the NRC-approved BFS Quality Assurance Program based on the requirements of NQA-1, NRC Regulatory Guide 7.10, and NUREG/CR-6407 criteria.

Table 4.1-2 - FuelSolutions™ W100 Transfer Cask ASME Code Requirement Compliance Summary (14 Pages)

Item	ASME Code Requirement	Issue	Alternative Compliance Basis
16	**NCA-3900, "Nonmetallic Material Manufacturer's and Constituent Suppliers Quality System Programs"**	See Item 1.	See Item 1.
17	**NCA-4000, "Quality Assurance"**	These quality assurance requirements do not apply.	See Item 4.
18	**NCA-5000, "Authorized Inspection"**	The manufacturing or operation of the FuelSolutions™ SFMS will not use an Authorized Inspection Agency.	An Authorized Inspection Agency is not typically used in the manufacturing or operation of components licensed under 10CFR72.
19	**NCA-8000, "Certificates of Authorization, Nameplates, Code Symbol Stamping, and Data Reports"**	The FuelSolutions™ SFMS will not use an ASME Code Certificate of Authorization, Code Symbol Stamping, or a Data Report.	An ASME Code Certificate of Authorization, Code Symbol Stamping, or a Data Report are not typically required for components licensed under 10CFR72. Nameplate information will be provided on each FuelSolutions™ W100 Transfer Cask.

Table 4.1-2 - FuelSolutions™ W100 Transfer Cask ASME Code Requirement Compliance Summary (14 Pages)

Item	ASME Code Requirement	Issue	Alternative Compliance Basis
Section III, Subsection NF:			
20	**NF-1111.1, "Design Requirements:"** "In addition to the requirements of NCA-3240, the Owner shall be responsible that loads . . . are adequately transferred without loss of the pressure boundary integrity for the Design or Service Loadings specified in the Design Specification governing the component or piping."	The FuelSolutions™ SFMS documentation does not contain an ASME Code Design Specification.	The requirements and criteria typically contained in an ASME Code Design Specification are contained in this FuelSolutions™ Storage System FSAR.
21	**NF-1130, "Boundaries of Jurisdiction"**	See Item 6.	See Item 6.

Table 4.1-2 - FuelSolutions™ W100 Transfer Cask ASME Code Requirement Compliance Summary (14 Pages)

Item	ASME Code Requirement	Issue	Alternative Compliance Basis
22	**NF-2121, "Permitted Material Specifications:"** ". . . (b) The requirements of this Article do not apply to such as gaskets, seals, . . . Requirements, if any, for these materials shall be stated in the Design Specification (NCA-3850)."	See Item 2.	See Item 2.
23	**NF-2130, "Certification of Material:"** "(a) Material used in construction of component supports shall be certified. Certified Material Test Reports in accordance with NCA-3867.4 shall be provided."	See Item 15.	See Item 15. When CMTRs are required by the BFS Quality Assurance Program, they will be provided per the requirements of NCA-3862.

Table 4.1-2 - FuelSolutions™ W100 Transfer Cask ASME Code Requirement Compliance Summary (14 Pages)

Item	ASME Code Requirement	Issue	Alternative Compliance Basis
24	**NF-2160, "Deterioration of Material In Service:"** "It is the responsibility of the Owner to select material suitable for the conditions stated in the Design Specifications (NCA-3250), with specific attention being given to the effects of Service Conditions upon the properties of the material."	See Item 6.	See Item 6.
25	**NF-2310, "Material to be Impact Tested"**	See Item 6.	See Item 6.

Table 4.1-2 - FuelSolutions™ W100 Transfer Cask ASME Code Requirement Compliance Summary (14 Pages)

Item	ASME Code Requirement	Issue	Alternative Compliance Basis
26	**NF-2610, "Documentation and Maintenance of Quality System Programs:"** "(a) Except as provided in (b) below, Material Manufacturers and Material Suppliers shall have a Quality System Program or an Identification and Verification Program, as applicable, which meets the requirements of NCA-3800. . . ."	See Item 15.	See Item 15.
27	**NF-3112.1, "Design Temperature"**	The FuelSolutions™ W100 Transfer Cask may be exposed to conditions (accident fire) not within the scope of the ASME Code.	Short-term material temperature limits for accident fire are defined in this FuelSolutions™ Storage System FSAR.

Table 4.1-2 - FuelSolutions™ W100 Transfer Cask ASME Code Requirement Compliance Summary (14 Pages)

Item	ASME Code Requirement	Issue	Alternative Compliance Basis
28	**NF-3113, "Service Conditions:"** "Each service condition to which the piping or component may be subjected shall be categorized in accordance with NCA-2142.2 and Service Limits [NCA-2142.4(b)] designated in the Design Specifications in such detail as will provide a complete basis for design in accordance with this Article."	See Item 6.	See Item 6.
29	**NF-3132, "Stress Analysis:"** "A detailed stress analysis or Design Report, as required by NCA-3550 for all piping or component supports, shall be prepared in sufficient detail to show that each of the stress limits of NF-3200 or NF-3300 is satisfied when the piping component support is subjected to the loadings of NF-3110."	See Item 3.	See Item 3.

Table 4.1-2 - FuelSolutions™ W100 Transfer Cask ASME Code Requirement Compliance Summary (14 Pages)

Item	ASME Code Requirement	Issue	Alternative Compliance Basis
30	**NF-3220, "Design by Analysis for Class 1"**	See Item 3.	See Item 3.
31	**NF-3226.1, "Permissible Types of Welded Joints in Plate- and Shell-Type Supports:"** (This section presents permissible weld configurations for butt, corner, and tee joints.)	The inner liner and outer structural shell do not employ 360° circumferential butt weld joints in their attachments to the top and bottom flanges of the cask.	The inner liner and outer structural shell employ modified 360° circumferential "corner joint" welds in their attachments to the top and bottom flanges of the transfer cask. as shown in this FuelSolutions™ Storage System FSAR.
32	**NF-4121, "Means of Certification:"** "The Certificate Holder for an item shall certify, by application of the appropriate Code Symbol and completion of the appropriate Data Report in accordance with NCA-8000, that materials used comply with the requirements of NB-2000 and that the fabrication or installation complies with the requirements of NF-4000."	The FuelSolutions™ SFMS will not use an ASME Code Symbol Stamp or a Data Report.	An ASME Code Symbol Stamping or Data Report are not typically required for components licensed under 10CFR72. Also see Item 15.

Table 4.1-2 - FuelSolutions™ W100 Transfer Cask ASME Code Requirement Compliance Summary (14 Pages)

Item	ASME Code Requirement	Issue	Alternative Compliance Basis
33	**NF-4213, "Qualification of Forming Processes for Impact Property Requirements"**	See Item 2.	See Item 2.
34	**NF-4724, "Bolt Tension:"** "All high strength structural bolts shall be preloaded to a value not less than that given in the Design Specification . . ."	See Item 2.	See Item 2.
35	**"Testing"**	1. Though not a Subsection NF requirement, the FuelSolutions™ W100 Transfer Cask fuel and neutron shield cavities will be hydrostatically tested to determine their leak tightness. 2. Though not a Subsection NF requirement, the FuelSolutions™ W100 Transfer Cask trunnions will be load tested per ANSI N14.6 requirements.	1. The FuelSolutions™ W100 Transfer Cask fuel and neutron shield cavity hydrostatic test pressures are presented in this FuelSolutions™ Storage System FSAR. 2. The FuelSolutions™ W100 Transfer Cask trunnion test load magnitude is presented in this FuelSolutions™ Storage System FSAR.

Table 4.1-2 - FuelSolutions™ W100 Transfer Cask ASME Code Requirement Compliance Summary (14 Pages)

Item	ASME Code Requirement	Issue	Alternative Compliance Basis
36	**"Overpressure Protection"**	Though not a Subsection NF requirement, the FuelSolutions™ W100 Transfer Cask neutron shield will employ a pressure relief device. The use of this device will not be documented in an ASME Code Overpressure Protection Report.	The FuelSolutions™ W100 Transfer Cask neutron shield pressure relief device set pressure is presented in this FuelSolutions™ Storage System FSAR.
37	**NF-8000, "Nameplates, Stamping, and Reports"**	The FuelSolutions™ SFMS will not use ASME Code Symbol Stamping, or a Data Report.	ASME Code Symbol Stamping or a Data Report are not typically required for components licensed under 10CFR72. Nameplate information will be provided on the FuelSolutions™ W100 Transfer Cask.

5.0 ADMINISTRATIVE CONTROLS

5.1 Training Modules

Training modules shall be developed under the general licensee's training program as required by 10CFR72.212(b)(6). Training modules shall require a comprehensive program for the operation and maintenance of the FuelSolutions™ spent fuel storage system and the independent spent fuel storage installation (ISFSI). The training modules shall include the following elements, at a minimum:

- FuelSolutions™ SFSS design (overview)
- ISFSI facility design (overview)
- Systems, structures, and components important to safety (overview)
- FuelSolutions™ SFSS and CANISTER storage Safety Analysis Report (overview)
- NRC Safety Evaluation Report (overview)
- Certificate of Compliance conditions
- FuelSolutions™ Technical Specifications
- Applicable regulatory requirements (e.g., 10CFR72, Subpart K, 10CFR20, 10CFR73)
- Required instrumentation and use
- Operating experience reviews
- FuelSolutions™ operating and maintenance procedures, including:
  - Fuel qualification and loading
  - Rigging and handling
  - LOADING OPERATIONS as described in Chapter 8 of the FSAR
  - UNLOADING OPERATIONS including reflooding as described in Chapter 8 of the FSAR
  - Auxiliary equipment operations and maintenance (i.e., vacuum drying, helium backfilling, leak testing, reflooding)
  - Transfer operations including loading and unloading of the transport vehicle
  - ISFSI surveillance operations
  - Radiation protection
  - Maintenance
  - Security
  - Off-normal and accident conditions, responses, and corrective actions

5.2 Preoperational Testing and Training Exercises

A preoperational training exercise of the FuelSolutions™ Storage System is to be conducted prior to the first use of any system component or conduct of any specific operation that may include, but is not limited to, the following:

- Moving a transfer cask/canister into the spent fuel pool.
- Loading an SNF assembly. This includes operations associated with selecting, loading, and independent verification of a dummy SNF assembly.
- Placing the top shield plug and removal of transfer cask/canister from the spent fuel pool.
- Canister sealing, vacuum drying, and cover gas backfill operations using a mock-up canister subassembly.
- Transfer cask upending/downending on the horizontal transfer trailer.
- Storage cask upending/downending.
- Horizontal canister transfer from the transfer cask to and retrieval from the storage cask.
- Horizontal canister transfer from the transfer cask to and retrieval from the transportation cask.
- Horizontal canister transfer from the transportation cask to and retrieval from the storage cask.
- Vertical canister transfer from the transfer cask to and retrieval from the storage cask.
- Vertical canister transfer from the transfer cask to and retrieval from the transportation cask.
- Canister reflood and opening using a mock-up canister subassembly.

Subsequent training will be in accordance with site-specific procedures.

5.3 Programs

The following programs shall be established, implemented, and maintained:

5.3.1 Cask Sliding Evaluation

The FuelSolutions™ W150 STORAGE CASK has been evaluated for sliding in the unlikely events of a seismic event. A sliding coefficient of friction of 0.3 is used in these analyses. This program provides a means for evaluating the coefficient of friction to assure that the cask will not slide significantly during the seismic event.

5.3.1.1 Pursuant to 10CFR72.212, this program shall evaluate the site-specific ISFSI pad configurations/conditions to assure that the cask would not slide significantly during the postulated design basis earthquake. The program shall conclude that the surface sliding friction coefficient of friction is greater than or equal to 0.3.

5.3.1.2 Alternatively, for site-specific ISFSI pad configuration/conditions with a lower sliding coefficient of friction than 0.3, the program shall evaluate the site-specific conditions to assure that the FuelSolutions™ W150 STORAGE CASK will not slide significantly during the postulated design basis earthquake. The program shall also evaluate storm winds, missile impacts and flood forces to assure that the cask will not slide such that it could result in impact with other casks or structures at the ISFSI. The program shall assure that these alternative analyses are documented and controlled.

5.3.2 Cask Transport Evaluation Program

This program provides a means for evaluating various transport configurations and transport route conditions to assure that the design basis drop limits are met.

5.3.2.1 Pursuant to 10CFR72.212, this program shall evaluate the site-specific transport conditions. To demonstrate compliance with Technical Specification 4.2.2, the program shall conclude that the expected lift height above the transport surface shall be less than or equal to that described by Technical Specification 4.2.2. Also, the program shall conclude that the transport route conditions (e.g., surface hardness and pad thickness) are equivalent to or less limiting than those prescribed for the typical pad surfaces which form the basis for Technical Specification 4.2.2.

5.3.2.2 Alternatively, for site-specific transport conditions which are not encompassed by those of Technical Specification 4.2.2, the program shall evaluate the site-specific conditions to assure that the STORAGE CASK end-drop loading does not exceed 88.5 *g* and the TRANSFER CASK side drop loading does not exceed 60 *g*. This alternative analysis shall be commensurate with the analysis which forms the basis of Technical Specification 4.2.2 (Reference FuelSolutions™ Storage System FSAR, Section 3.7). The program shall assure that these alternative analyses are documented and controlled.

5.3.2.3 This program shall establish administrative controls and procedures to assure that cask transport operations are conducted within the limits imposed by the Technical Specification or the alternative analysis described above.

5.3.3 Technical Specifications (TS) Bases Control Program

This program provides a means for processing changes to the Bases of these Technical Specifications.

5.3.3.1 Changes to the Bases of the TS shall be made under appropriate administrative controls and reviews.

5.3.3.2 Licensees may make changes to Bases without prior NRC approval provided the changes do not involve either of the following:

- A change in the TS incorporated in the license
- A change to the FSAR or Bases that involves an unreviewed safety question, a significant increase in occupational exposure, or a significant unreviewed environmental impact as defined in 10CFR72.48.

5.3.3.3 The Bases Control Program shall contain provisions to ensure that the Bases are maintained consistent with the FSAR.

5.3.3.4 Proposed changes that do not meet the criteria of 5.3.3.2 above shall be reviewed and approved by the NRC prior to implementation. Changes to the Bases implemented without prior NRC approval shall be provided to the NRC on a frequency consistent with 10CFR72.48(b)(2).

5.3.4 Radioactive Effluent Control Program

This program implements the requirements of 10CFR72.44(d).

5.3.4.1 The FuelSolutions™ Storage System does not create any radioactive materials or have any radioactive waste treatment systems. Therefore, specific operating procedures for the control of radioactive effluents are not required. Specification 3.1.3, CANISTER Leak Rate, provides assurance that there are essentially no radioactive effluents from the CANISTERs.

5.3.4.2 This program includes an environmental monitoring program. The FuelSolutions™ Storage System may be included in a site environmental monitoring program.

5.3.4.3 An annual report shall be submitted pursuant to 10CFR72.44(d)(3) specifying the quantity of each of the principal radionuclides released to the environment in liquid and in gaseous effluents during the previous calendar year of operation.

5.3.5 Cask Surface Dose Rate Evaluation Program

This program provides a means for ensuring that ISFSIs using FuelSolutions™ STORAGE CASKS do not violate the requirements of 10CFR72 and 10CFR20 regarding radiation doses and dose rates.

5.3.5.1 As part of its evaluation pursuant to 10CFR72.212, the licensee shall perform an analysis to confirm that the limits of 10CFR20 and 10CFR72.104 will be satisfied under the actual site conditions and configurations considering the planned number of casks to be used and the planned fuel loading conditions.

5.3.5.2 On the basis of the analysis in 5.3.5.1, the licensee shall establish a set of cask surface dose rate limits which are to be applied to FuelSolutions™ STORAGE CASKS used at the site. Limits shall establish average gamma-ray and neutron dose rates for:

- The outside vertical surface of the STORAGE CASK at approximately 6 feet above the base.
- The inlet or outlet vent screen surfaces.
- The top lid.

5.3.5.3 Notwithstanding the limits established in TS 5.3.5.2, the dose rate limits may not exceed the following values:

- 50 mrem/hr on the side.
- 510 mrem/hr at the inlet or outlet vent screen surfaces.
- 50 mrem/hr on the top lid.

5.3.5.4 Within 12 hours following placement of the loaded STORAGE CASK on the ISFSI pad, the licensee shall measure the cask surface dose rates and calculate average values as described in 5.3.5.7 and 5.3.5.8.

The measured average dose rates shall be compared to the limits established in TS 5.3.5.2 or the limits in 5.3.5.3, whichever are lower.

5.3.5.5 If the measured average surface dose rates do not meet the limits of TS 5.3.5.2 or TS 5.3.5.3, whichever are lower, the licensee shall take the following actions:

- Notify the U.S. Nuclear Regulatory Commission (Director of the Office of Nuclear Material Safety and Safeguards) within 30 days.
- Administratively verify that the correct fuel was loaded.
- Perform an analysis to determine that placement of the as-loaded cask at the ISFSI will not cause the ISFSI to exceed the radiation exposure limits of 10CFR20 and 10CFR72.

5.3.5.6 If the analysis in 5.3.5.5 shows that placement of the as-loaded cask at the ISFSI will cause the ISFSI to exceed the radiation exposure limits of 10CFR20 and 10CFR72, the licensee shall remove all fuel assemblies from the cask within 30 days of the time of cask loading.

5.3.5.7 The surface dose rates shall be measured at the following points:

- At least eight readings taken at equal spacing around the outside vertical surface of the STORAGE CASK at approximately 6 feet above the base.
- The inlet or outlet vent screen surfaces.
- At least five readings taken on the top lid, with one reading from the center and the other four taken at equal spacing 30 inches from the center.

5.3.5.8 The average dose rates shall be determined as follows:

In each of the three measurement zones in 5.3.5.7, the sum of the dose rate measurements is divided by the number of measurements to determine the

average for that zone. The neutron and gamma-ray dose rates are averaged separately. Uniformly spaced dose rate measurement locations are chosen such that each point in a given zone represents approximately the same surface area.

5.3.6 Vacuum Drying Program

See the CANISTER Technical Specifications for the applicable information.

5.3.7 Cladding Oxide Thickness Measurement Program

See the CANISTER Technical Specifications for the applicable information.

5.3.8 Storage Cask Periodic Monitoring Program

The STORAGE CASK containing a CANISTER loaded with fuel has been evaluated for the unlikely event of full blockage of all STORAGE CASK inlet and outlet vent screens during STORAGE OPERATIONS. Transient thermal analyses have been performed for the blocked vent accident condition to determine the time at which the limiting short-term allowable temperature is reached in the STORAGE CASK. Periodic monitoring is required at intervals that are less than the time required to reach the limiting short-term temperature limit.

This program shall establish administrative controls and procedures to assure that the licensee will be able to determine when corrective action needs to be taken to maintain safe storage conditions. The required surveillance frequency for a STORAGE CASK containing a CANISTER loaded with fuel is as follows:

Total Heat Load (Q)	Surveillance Frequency
Q > 20 kW	24 hours (1 day)
15 kW < Q ≤20 kW	48 hours (2 days)
10 kW < Q ≤15 kW	96 hours (4 days)
5 kW < Q ≤10 kW	168 hours (1 week)
Q ≤5 kW	336 hours (2 weeks)

Acceptable means of monitoring the STORAGE CASK include periodic visual inspection of all STORAGE CASK inlet and outlet vent screens OR periodic STORAGE CASK liner thermocouple temperature readings. When the STORAGE CASK liner thermocouple temperature measurements are used as the means of monitoring, the following limits shall be met:

	Measured Thermocouple Temperature (°F)	
Total Heat Load (Q)	Normal Ambient (≤100°F)	Off-Normal Ambient (≤125°F)
Q > 20 kW	163	192
15 kW < Q ≤20 kW	156	181
10 kW < Q ≤15 kW	146	171
5 kW < Q ≤10 kW	136	161
Q ≤5 kW	126	151

Alternatively, the program may establish other suitable surveillance frequencies and liner thermocouple temperature limits to maintain the concrete temperature below the short-term allowable temperature of 350°F for a specific CANISTER heat load.

5.4 Special Requirements for First System in Place

See the CANISTER Technical Specifications for the applicable information.

TECHNICAL SPECIFICATIONS BASES
FOR THE FuelSolutions™ STORAGE SYSTEM

Revision 4

Page

B 2.0 FUNCTIONAL AND OPERATING LIMITS . . . . . B 2.0-1

B 3.0 LIMITING CONDITION FOR OPERATION (LCO) APPLICABILITY . . . . . B 3.0-1

B 3.0 SURVEILLANCE REQUIREMENT (SR) APPLICABILITY . . . . . B 3.0-4

B 3.1 CANISTER INTEGRITY . . . . . B 3.1-1
B 3.1.1 Canister Helium Backfill Density . . . . . B 3.1-1
B 3.1.2 Canister Vacuum Drying Pressure . . . . . B 3.1-2
B 3.1.3 Canister Leak Rate . . . . . B 3.1-4
B 3.1.4 Hydraulic Ram Force During Horizontal Canister Transfer . . . . . B 3.1-7
B 3.1.5 Canister Vertical Time Limit in Transfer Cask . . . . . B 3.1-9

B 3.2 CANISTER RADIATION PROTECTION . . . . . B 3.2-1
B 3.2.1 Canister Surface Contamination . . . . . B 3.2-1

B 3.3 STORAGE CASK INTEGRITY . . . . . B 3.3-1
B 3.3.1 (Deleted) . . . . . B 3.3-1
B 3.3.2 Storage Cask Periodic Monitoring . . . . . B 3.3-2
B 3.3.3 Storage Cask Temperatures During Horizontal Transfer . . . . . B 3.3-3

B 3.4 TRANSFER CASK INTEGRITY . . . . . B 3.4-1
B 3.4.1 Transfer Cask Structural Shell Temperature . . . . . B 3.4-1

B 3.5 TRANSFER CASK RADIATION PROTECTION . . . . . B 3.5-1
B 3.5.1 Transfer Cask Surface Contamination . . . . . B 3.5-1

B 2.0 FUNCTIONAL AND OPERATING LIMITS

BASES

See each individual CANISTER Technical Specification for applicable functional and operating limits bases.

B 3.0 LIMITING CONDITION FOR OPERATION (LCO) APPLICABILITY

BASES

LCOs	LCO 3.0.1, 3.0.2, 3.0.4, and 3.0.5 establish the general requirements applicable to all Specifications and apply at all times, unless otherwise stated.
LCO 3.0.1	LCO 3.0.1 establishes the Applicability statement within each individual Specification as the requirement for when the LCO is required to be met (i.e., when the unit is in the specified conditions of the Applicability statement of each Specification).
LCO 3.0.2	LCO 3.0.2 establishes that upon discovery of a failure to meet an LCO, the associated ACTIONS shall be met. The Completion Time of each Required action for an ACTIONS Condition is applicable from the point in time that an ACTIONS Condition is entered. The Required Actions establish those remedial measures that must be taken within specified Completion Times when the requirements of an LCO are not met. This specification establishes that: a. Completion of the Required Actions within the specified Completion Times constitutes compliance with a Specification; and b. Completion of the Required Actions is not required when an LCO is met within the specified Completion Time, unless otherwise specified. There are two basic types of Required Actions. The first type of Required Action specifies a time limit in which the LCO must be met. This time limit is the Completion Time to restore a system or component or to restore variables to within specified limits. Whether stated as a Required Action or not, correction of the entered Condition is an action that may always be considered upon entering ACTIONS. The second type of Required Action specifies the remedial measures that permit continued operation that is not further restricted by the Completion Time. In this case, compliance with the Required Actions provides an acceptable level of safety for continued operation. Completing the Required Actions is not required when an LCO is met or is no longer applicable, unless otherwise stated in the individual Specifications.

(continued)

LCO 3.0.2 (continued)	The Completion Times of the Required Actions are also applicable when a system or component is removed from service intentionally. The reasons for intentionally relying on the ACTIONS include, but are not limited to, performance of Surveillances, preventive maintenance, corrective maintenance, or investigation of operational problems. Entering ACTIONS for these reasons must be done in a manner that does not compromise safety. Intentional entry into ACTIONS should not be made for operational convenience.
LCO 3.0.3	Not Applicable.
LCO 3.0.4	LCO 3.0.4 establishes limitations on changes in specified conditions in the Applicability when an LCO is not met. It precludes placing the facility in a specified condition stated in that Applicability (e.g., Applicability desired to be entered) when the following exist: a. ISFSI conditions are such that the requirements of the LCO would not be met in the Applicability desired to be entered; and b. Continued noncompliance with the LCO requirements, if the Applicability were entered, would result in ISFSI activities being required to exit the Applicability desired to be entered to comply with the Required Actions. Compliance with Required Actions that permit continued operation for an unlimited period of time in a specified condition provides an acceptable level of safety for continued operation. This is without regard to the status of the ISFSI. Therefore, in such cases, entry into a specified condition in the Applicability may be made in accordance with the provisions of the Required Actions. The provisions of this Specification should not be interpreted as endorsing the failure to exercise the good practice of restoring systems or components before entering an associated specified condition in the Applicability.

	The provisions of LCO 3.0.4 shall not prevent changes in specified conditions in the Applicability that are required to comply with ACTIONS. In addition, the provisions of LCO 3.0.4 shall not prevent changes in specified conditions in the Applicability that are related to the unloading of a CANISTER. Exceptions to LCO 3.0.4 are stated in the individual Specifications. Exceptions may apply to all the ACTIONS or to a specific Required Action of a Specification.
LCO 3.0.5	LCO 3.0.5 establishes the allowance for restoring equipment to service under administrative controls when it has been removed from service or determined to not meet the LCO to comply with ACTIONS. The sole purpose of this Specification is to provide an exception to LCO 3.0.2 (e.g., to not comply with the applicable Required Actions(s)) to allow the performance of SRS to demonstrate: a. The equipment being returned to service meets the LCO; or b. Other equipment meets the applicable LCOs. The administrative controls assure the time the equipment is returned to service in conflict with the requirements of the ACTIONS is limited to the time absolutely necessary to perform the allowed testing. This Specification does not provide time to perform any other preventive or corrective maintenance.
LCO 3.0.6	Not Applicable.
LCO 3.0.7	Not Applicable.

B 3.0 SURVEILLANCE REQUIREMENT (SR) APPLICABILITY

BASES

SRs	SR 3.0.1 through SR 3.0.4 establish the general requirements applicable to all Specifications and apply at all times, unless otherwise stated.
SR 3.0.1	SR 3.0.1 establishes the requirement that SRs must be met during the specified conditions in the Applicability for which the requirements of the LCO apply, unless otherwise specified in the individual SRs. This Specification is to assure that Surveillances are performed to verify the systems, components, and that variables are within specified limits. Failure to meet a surveillance within the specified Frequency, in accordance with SR 3.0.2, constitutes a failure to meet an LCO. Systems and components are assumed to meet the LCO when the associated SRS have been met. Nothing in this Specification, however, is to be construed as implying that systems or components meet the associated LCO when: a. The systems or components are known to not meet the LCO, although still meeting the SRS; or b. The requirements of the Surveillance(s) are known not to be met between required Surveillance performances. Surveillances do not have to be performed when the facility is in a specified condition for which the requirements of the associated LCO are not applicable, unless otherwise specified. Surveillances, including Surveillances invoked by Required Actions, do not have to be performed on equipment that has been determined to not meet the LCO because the ACTIONS define the remedial measures that apply. Surveillances have been met and performed in accordance with SR 3.0.2, prior to returning equipment to service. Upon completion of maintenance, appropriate post maintenance testing is required. This includes ensuring applicable Surveillances are not failed and their most recent performance is in accordance with SR 3.0.2. Post maintenance testing may not be possible in the current specified conditions in the Applicability due to the necessary facility (continued)

SR 3.0.1 (continued)	parameters not having been established. In these situations, the equipment may be considered to meet the LCO provided testing has been satisfactorily completed to the extent possible and the equipment is not otherwise believed to be incapable of performing its function. This will allow operation to proceed to a specified condition where other necessary post maintenance tests can be completed.
SR 3.0.2	SR 3.0.2 establishes the requirements for meeting the specified Frequency for Surveillances and any Required Action with a Completion Time that requires the periodic performance of the Required Action on a "once per..." interval. SR 3.0.2 permits a 25% extension of the interval specified in the Frequency. This extension facilitates Surveillance scheduling and considers plant operating conditions that may not be suitable for conducting the Surveillance (e.g., transient conditions or other ongoing Surveillance or maintenance activities). The 25% extension does not significantly degrade the reliability that results from performing the Surveillance at its specified Frequency. This is based on the recognition that the most probable result of any particular surveillance being performed is the verification of conformance with the SRs. The exceptions to SR 3.0.2 are those Surveillances for which the 25% extension of the interval specified in the Frequency does not apply. These exceptions are stated in the individual Specifications as a Note in the Frequency stating, "SR 3.0.2 is not applicable." As stated in SR 3.0.2, the 25% extension also does not apply to the initial portion of a periodic Completion Time that requires performance on a "once per..." basis. The 25% extension applies to each performance after the initial performance. The initial performance of the Required Action, whether it is a particular Surveillance or some other remedial action, is considered a single action with a single Completion Time. One reason for not allowing the 25% extension to this Completion Time is that such an action usually verifies that no loss of function has occurred by checking the status of redundant or diverse components or accomplishes the function of the affected equipment in an alternative manner. The provisions of SR 3.0.2 are not intended to be used repeatedly merely as an operational convenience to extend Surveillance intervals or periodic Completion Time intervals beyond those specified.

SR 3.0.3

SR 3.0.3 establishes the flexibility to defer declaring affected equipment as not meeting the LCO or an affected variable outside the specified limits when a Surveillance has not been completed within the specified Frequency. A delay period of up to 24 hours or up to the limit of the specified Frequency, whichever is less, applies from the point in time that it is discovered that the Surveillance has not been performed in accordance with SR 3.0.2, and not at the time that the specified Frequency was not met.

This delay period provides adequate time to complete Surveillances that have been missed. This delay period permits the completion of a surveillance before complying with Required Actions or other remedial measures that might preclude completion of the Surveillance.

The basis for this delay period includes consideration of facility conditions, adequate planning, availability of personnel, the time required to perform the Surveillance, the safety significance of the delay in completing the required Surveillance, and the recognition that the most probable result of any particular Surveillance being performed is the verification of conformance with the requirements. When a Surveillance with a Frequency based not on time intervals, but upon specified facility conditions or operational situations, is discovered not to have been performed when specified, SR 3.0.3 allows the full delay period of 24 hours to perform the Surveillance.

SR 3.0.3 also provides a time limit for completion of Surveillances that become applicable as a consequence of changes in the specified conditions in the Applicability imposed by Required Actions.

Failure to comply with specified Frequencies for SRS is expected to be an infrequent occurrence. Use of the delay period established by SR 3.0.3 is a flexibility which is not intended to be used as an operational convenience to extend Surveillance intervals.

If a Surveillance is not completed within the allowed delay period, then the equipment is considered to not meet the LCO or the variable is considered outside the specified limits and the Completion times of the Required Actions for the applicable LCO Conditions begin immediately upon expiration of the delay period.

(continued)

SR 3.0.3 (continued)

If a Surveillance is failed within the delay period, then the equipment does not meet the LCO, or the variable is outside the specified limits and the Completion Times of the Required Actions for the applicable LCO Conditions begin immediately upon the failure of the Surveillance.

Completion of the Surveillance within the delay period allowed by this Specification, or within the Completion Time of the ACTIONS, restores compliance with SR 3.0.1.

SR 3.0.4

SR 3.0.4 establishes the requirement that all applicable SRS must be met before entry into a specified condition in the Applicability.

This Specification assures that system and component requirements and variable limits are met before entry into specified conditions in the Applicability for which these systems and component assure safe operation of the facility.

The provisions of this Specification should not be interpreted as endorsing the failure to exercise the good practice of restoring systems or components before entering an associated specified condition in the Applicability.

However, in certain circumstances, failing to meet an SR will not result in SR 3.0.4 restricting a change in specified condition. When a system, subsystem, component, device, or variable is outside its specified limits, the associated SR(s) are not required to be performed, per SR 3.0.1, which states that Surveillances do not have to be performed on such equipment. When equipment does not meet the LCO, SR 3.0.4 does not apply to the associated SR(s) since the requirement for the SR(s) to be performed is removed. Therefore, failing to perform the Surveillance(s) within the specified Frequency does not result in an SR 3.0.4 restriction to changing specified conditions of the Applicability. However, since the LCO is not met in this instance, LCO 3.0.4 will govern any restrictions that may (or may not) apply to specified condition changes.

The provisions of SR 3.0.4 shall not prevent changes in specified conditions in the Applicability that are required to comply with ACTIONS. In addition, the provisions of LCO 3.0.4 shall not prevent changes in specified conditions in the Applicability that are related to the unloading of a CANISTER.

(continued)

SR 3.0.4 (continued)

The precise requirements for performance of SRs are specified such that exceptions to SR 3.0.4 are not necessary. The specific time frames and conditions necessary for meeting the SRs are specified in the Frequency, in the surveillance, or both. This allows performance of Surveillances when the prerequisite condition(s) specified in a surveillance procedure require entry into the specified condition in the Applicability of the associated LCO prior to the performance or completion of a Surveillance. A Surveillance that could not be performed until after entering the LCO Applicability would have its Frequency specified such that it is not "due" until the specific conditions needed are met.

Alternately, the Surveillance may be stated in the form of a Note as not required (to be met or performed) until a particular event, condition, or time has been reached. Further discussion of the specific formats of SRs' annotation is found in Section 1.4, Frequency.

B 3.1 CANISTER INTEGRITY

B 3.1.1 Canister Helium Backfill Density

BASES

See each individual CANISTER Technical Specification for the applicable LCO Bases.

B 3.1 CANISTER INTEGRITY

B 3.1.2 Canister Vacuum Drying Pressure

BASES

BACKGROUND	A TRANSFER CASK with an empty CANISTER is placed in the spent fuel pool and loaded with fuel assemblies meeting the requirements of the Functional and Operating Limits. A shield plug is then placed in the CANISTER, and the TRANSFER CASK is raised to the spent fuel pool surface. The dose rates are measured near the center of the top shield plug. The TRANSFER CASK and CANISTER are then moved to the cask preparation area where the inner closure plate is welded to the CANISTER shell and a pressure test performed. The CANISTER is drained, vacuum-dried, and backfilled with helium. The CANISTER outer top closure plate is then welded to the CANISTER shell. Contamination measurements are completed prior to moving the TRANSFER CASK and CANISTER to the ISFSI. Vacuum drying is used to remove residual moisture from the CANISTER cavity after the water has been drained. Water that is not drained from the cavity evaporates from the fuel and surfaces due to the reduced vapor pressure of water in a vacuum. Evaporation is also aided by the temperature increase due to the heat generation of the fuel.
APPLICABLE SAFETY ANALYSIS	The confinement of radioactivity during the storage of spent fuel in the CANISTER within the STORAGE CASK is assured by the use of multiple confinement boundaries and systems. The barriers are the fuel pellet matrix, the metallic fuel cladding tubes in which the fuel pellets are contained, and the CANISTER in which the fuel assemblies are stored. Long-term integrity of the fuel and cladding depend on storage in a dry inert atmosphere. This is accomplished by removing water from the CANISTER and backfilling the cavity with an inert gas (Reference 1). The integrity of the CANISTER and fuel is demonstrated under vacuum drying conditions to meet the applicable thermal limits for steady-state conditions (Reference 2).
LCO	A stable vacuum pressure that is equal to or less than the specified pressure indicates that all water has evaporated and has been removed from the CANISTER cavity. Removing water from the CANISTER cavity helps maintain the long-term integrity of the fuel cladding.

APPLICABILITY	CANISTER cavity vacuum drying is performed during LOADING OPERATIONS prior to transporting the CANISTER to the ISFSI (Reference 1).
ACTIONS	A note has been added to the Actions stating that a separate Condition entry is allowed for each CANISTER. This is acceptable since the Required Actions for each Condition provide appropriate compensatory measures for each CANISTER not meeting the LCO. Subsequent CANISTERs that do not meet the LCO are governed by subsequent Condition entry and application of associated Required Actions. A.1 If the cavity vacuum drying pressure cannot be met, actions must be taken to meet the LCO. Failure to successfully complete vacuum drying may have many causes, such as failure of the vacuum drying system, inadequate draining, ice clogging the drain lines, or leaking welds between the inner closure plate and the CANISTER shell and the vent and drain port bodies. The Completion Time of "prior to continuing LOADING OPERATIONS" is appropriate since the time required to determine and correct most failure mechanisms is indeterminate and continued vacuum conditions do not affect the safe storage of spent fuel assemblies.
SURVEILLANCE REQUIREMENTS	SR 3.1.2.1 The long-term integrity of the stored fuel is dependent on storage in a dry, inert environment. Cavity dryness is demonstrated by evacuating the cavity to a very low pressure and verifying that the pressure is held over a specified period of time. A low vacuum pressure is an indication that the cavity is dry. This dryness test must be performed successfully on each CANISTER before placing in storage. The test must be performed prior to final inerting and closure of the CANISTER. Since water removal is performed with inert gas, the fuel is not exposed to an oxidizing atmosphere during draining and drying operations. Therefore, the completion time is appropriate.
REFERENCES	1. FuelSolutions™ Storage System FSAR, Section 8.1.8. 2. FuelSolutions™ Canister Storage FSAR, Section 4.5

B 3.1 CANISTER INTEGRITY

B 3.1.3 Canister Leak Rate

BASES

BACKGROUND	A TRANSFER CASK with an empty CANISTER is placed in the spent fuel pool and loaded with fuel assemblies meeting the requirements of the Functional and Operating Limits. A shield plug is then placed in the CANISTER, and the TRANSFER CASK is raised to the spent fuel pool surface. The dose rates are measured near the center of the top shield plug. The TRANSFER CASK and CANISTER are then moved to the cask preparation area where the inner closure plate is welded to the CANISTER shell and a pressure test performed. The CANISTER is drained, vacuum-dried, and backfilled with helium. The CANISTER outer top closure plate is then welded to the CANISTER shell. Contamination measurements are completed prior to moving the TRANSFER CASK and CANISTER to the ISFSI. A CANISTER leak rate is specified to assure the CANISTER confinement boundary, to maintain an inert helium atmosphere in the CANISTER during storage throughout the 100-year design life (to prevent fuel cladding degradation and promote heat transfer), and to confine all radioactive materials during storage.
APPLICABLE SAFETY ANALYSIS	The confinement of radioactivity during the storage of spent fuel in the CANISTER within the STORAGE CASK is assured by the use of multiple confinement boundaries and systems. The barriers are the fuel pellet matrix, the metallic fuel cladding tubes in which the fuel pellets are contained, and the CANISTER in which the fuel assemblies are stored. Long-term integrity of the fuel and cladding depend on storage in a dry inert atmosphere. This is accomplished by removing water from the CANISTER and backfilling the cavity with an inert gas (Reference 1).
LCO	Verifying the CANISTER leak rate is within the limit will assure the assumptions in the radiological evaluations are maintained. The helium leak rate value (not to exceed 8.52×10^{-6} ref-cc/sec) is used in the confinement analysis presented in Chapter 7 of each CANISTER FSAR (Reference 2).
APPLICABILITY	The helium leak rate measurement is performed during LOADING OPERATIONS prior to transferring the CANISTER to the ISFSI. TRANSFER OPERATIONS would not begin if the helium leak rate were not within the limit. Therefore, testing for CANISTER leak tightness is not required during TRANSFER OPERATIONS or STORAGE OPERATIONS.

ACTIONS

A note has been added to the ACTIONS stating that a separate Condition entry is allowed for each CANISTER. This is acceptable since the Required Actions for each Condition provide appropriate compensatory measures for each CANISTER not meeting the LCO. Subsequent CANISTERs that do not meet the LCO are governed by subsequent Condition entry and application of associated Required Actions.

A.1

If the leakage rate of the inner closure plate weld exceeds the specified limit, actions must be taken to meet the LCO. Such actions may include:

- Checking the CANISTER vent and drain port fittings for leaks, and repairing or replacing as required.
- Checking the inner closure plate weld for any indications of leakage, and repairing as required.
- Checking the inner closure plate for any surface indications resulting in leakage, and repairing as required.

The Completion Time is sufficient to determine and correct most failures that would cause a helium leak rate in excess of the limit.

B.1

If the CANISTER helium leak rate cannot be successfully returned to the specified limit, the fuel must be placed in a safe condition in the spent fuel pool. The Completion Time is reasonable based on the time required to return the fuel to the spent fuel pool in an orderly manner without challenging personnel.

SURVEILLANCE REQUIREMENTS	SR 3.1.3.1 A primary design consideration of the CANISTER is that it is sufficiently leak tight to assure that the helium remains in the CANISTER during long-term storage. The helium leak rate must be measured prior to placing each CANISTER in storage. A helium detection device is used to confirm that the leak rate is below the specified limit. The measurements are performed using calibrated instruments and procedures that comply with ANSI N14.5 or equivalent (Reference 3). Measuring the helium leak rate must be performed successfully on each CANISTER prior to placing it in storage. The surveillance must be performed within 48 hours. Verification of the integrity of the closure plate and associated welds by pressure testing must be performed successfully on each CANISTER prior to placing it in storage. The surveillance must be performed within 48 hours after verifying vacuum pressure during drying is within limit. This allows sufficient time to perform the surveillance while minimizing the time the fuel is in the CANISTER without verifying that the CANISTER is sealed.
REFERENCES	1. FuelSolutions™ Storage System FSAR, Section 8.1.8. 2. FuelSolutions™ Canister Storage FSAR Sections 7.2 and 7.3. 3. ANSI N14.5, *American National Standard for Leakage Tests on Packages for Shipment of Radioactive Materials*, January 1997.

B 3.1 CANISTER INTEGRITY

B 3.1.4 Hydraulic Ram Force During Horizontal Canister Transfer

BASES

BACKGROUND	After the CANISTER is loaded, dried, and sealed, it is transferred from the TRANSFER CASK to the STORAGE CASK. When this transfer is performed horizontally at the ISFSI, a hydraulic ram is used to push the CANISTER from the TRANSFER CASK into the STORAGE CASK. The CANISTER is retrieved from the STORAGE CASK by pushing the CANISTER from the STORAGE CASK to the TRANSFER CASK using the hydraulic ram.
APPLICABLE SAFETY ANALYSIS	The confinement of radioactivity during the storage of spent fuel in the CANISTER within the STORAGE CASK is assured by the use of multiple confinement boundaries and systems. The barriers are the fuel pellet matrix, the metallic fuel cladding tubes in which the fuel pellets are contained, and the CANISTER in which the fuel assemblies are stored. Long term integrity of the fuel and cladding are dependent on storage in a dry inert atmosphere. This is accomplished by removing water from the CANISTER and backfilling the cavity with inert gas. The structural integrity of the canister assures the continued maintenance of this environment.
LCO	Verifying that the force applied to the CANISTER by the hydraulic ram remains within the limit will assure that the CANISTER is not subjected to loads in excess of those analyzed in Chapter 3 of the applicable Canister Storage FSAR (Reference 1).
APPLICABILITY	The hydraulic ram force monitoring is performed during horizontal TRANSFER OPERATIONS (Reference 2).
ACTIONS	A note has been added to the ACTIONS stating that a separate Condition entry is allowed for each CANISTER. This is acceptable since the Required Actions for each Condition provide appropriate compensatory measures for each CANISTER not meeting the LCO. Subsequent CANISTERs that do not meet the LCO are governed by subsequent Condition entry and application of associated Required Actions.

(continued)

ACTIONS (continued)	A.1 If the hydraulic ram force exceeds the specified limit, horizontal transfer of the CANISTER must be stopped. The immediate completion time indicates the importance of not significantly exceeding the force limit. The monitoring of the ram force will typically be performed by monitoring the hydraulic fluid pressure. The pressure value corresponding to the limit will be dependent on the design of the ram (i.e., the ram internal area times the pressure equals the applied force). The hydraulic ram controls will typically be supplied with cut-off switches set to trip when the ram pressure reaches a pre-set value, typically at or just below the pressure corresponding to the hydraulic ram force limit. The reason for reaching the force limit usually is misalignment of the TRANSFER CASK and the STORAGE CASK. Other causes may include improperly installed rails in the STORAGE CASK, or damage to the sliding surface of the STORAGE CASK rails. A.2 In order to determine the reason for the excessive ram force and to proceed with corrective actions, the CANISTER must be returned to the cask from which it was being transferred (e.g. if transferring from the TRANSFER CASK to the STORAGE CASK, return the CANISTER to the TRANSFER CASK). A.3 The rails in the cask to which the CANISTER is to be transferred should be inspected for proper installation and for any damage. These are potential reasons for the excessive ram force. A.4 The alignment of the casks should be reverified. LCO 3.5.2 provides the process for verifying alignment and correcting problems.
SURVEILLANCE REQUIREMENTS	SR 3.1.4.1 The hydraulic ram force must be continuously monitored during horizontal TRANSFER OPERATIONS when transferring the CANISTER between the STORAGE CASK and the TRANSFER CASK.
REFERENCES	1. FuelSolutions™ Canister Storage FSAR, Section 3.6. 2. FuelSolutions™ Storage System FSAR, Section 8.1.10.

B 3.1 CANISTER INTEGRITY

B 3.1.5 Canister Vertical Time Limit in Transfer Cask

BASES

See each individual CANISTER Technical Specification for the applicable LCO Bases.

B 3.2 CANISTER RADIATION PROTECTION

B 3.2.1 Canister Surface Contamination

BASES

BACKGROUND	A TRANSFER CASK with an empty CANISTER is placed in the spent fuel pool and loaded with spent fuel assemblies. As a result, the CANISTER surface may become contaminated with radioactive material from the spent fuel pool water. The non-fixed surface contamination on the canister is removed to prevent loose contamination from becoming airborne particulate and to prevent the STORAGE CASK from becoming contaminated during storage.
APPLICABLE SAFETY ANALYSIS	The ISFSI radiation protection measures are based on the assumption that the exterior surfaces of the CANISTERS have been decontaminated. Failure to decontaminate the surfaces of the CANISTERS could lead to higher-than-projected occupational doses and potential site contamination.
LCO	The specified maximum non-fixed contamination level complies with the guidance in NRC IE Circular No. 81-07 (Reference 1). By meeting these limits, the shipping container removable surface contamination requirements of 10CFR71.87(i)(l) (Reference 2), and 49CFR173.443 (Reference 3) are met. Consequently, these contamination levels are consistent with the exposure limits for the general public. This will assure that contamination limits of the inner surfaces of the storage cask are not exceeded and will alleviate potential releases of airborne particulate to the environment.
APPLICABILITY	CANISTER surface contamination is measured during LOADING OPERATIONS to assure that it is lower than the LCO limit. Measurement of CANISTER surface contamination occurs before TRANSFER OPERATIONS and STORAGE OPERATIONS. It is unnecessary during UNLOADING OPERATIONS because surface contamination would have been measured prior to moving the subject CANISTER to the ISFSI.
ACTIONS	A note has been added to the Actions stating that a separate Condition entry is allowed for each CANISTER. This is acceptable since the Required Actions for each Condition provide appropriate compensatory measures for each CANISTER not meeting the LCO. Subsequent CANISTERs that do not meet the LCO are governed by subsequent Condition entry and application of associated Required Actions.

(continued)

ACTIONS (continued)	A.1 If the removable external surface contamination of a CANISTER that has been loaded with spent fuel is not within the LCO limits, action must be initiated to decontaminate the CANISTER and bring the removable external surface contamination within limits. The Completion Time of 7 days is appropriate given that the time needed to complete the decontamination is indeterminate and surface contamination does not affect the safe storage of the spent fuel assemblies. B.1 If the contamination on the external surface of the CANISTER cannot successfully be removed within 7 days, the cause for the inability to remove the contamination must be determined and corrected. The CANISTER must be decontaminated to meet the LCO prior to moving the TRANSFER CASK out of the fuel building for horizontal CANISTER transfer.
SURVEILLANCE REQUIREMENTS	SR 3.2.1.1 This SR verifies that the CANISTER non-fixed surface contamination is lower than the LCO limits. The Frequency requires performing the verification prior to TRANSFER OPERATIONS in order to confirm that the CANISTER can be moved to the ISFSI without spreading loose contamination.
REFERENCES	1. IE Circular No. 81-07, Nuclear Regulatory Commission, 1981. 2. Title 10, U.S. Code of Federal Regulations, Part 71 3. Title 49, U.S. Code of Federal Regulations, Part 173

B 3.3 STORAGE CASK INTEGRITY

B 3.3.1 (Deleted)

B 3.3 STORAGE CASK INTEGRITY

B 3.3.2 Storage Cask Periodic Monitoring

BASES

See each individual CANISTER Technical Specification for the applicable LCO bases.

B 3.3 STORAGE CASK INTEGRITY

B 3.3.3 Storage Cask Temperatures During Horizontal Transfer

BASES

See each individual CANISTER Technical Specification for the applicable LCO bases.

B 3.4 TRANSFER CASK INTEGRITY

B 3.4.1 Transfer Cask Structural Shell Temperature

BASES

BACKGROUND	The TRANSFER CASK is used to transfer a CANISTER containing fuel assemblies from the plant's fuel building to the ISFSI for horizontal TRANSFER OPERATIONS. The TRANSFER CASK includes a liquid neutron shield. To prevent damage to the neutron shield shell the liquid must not freeze. Damage to the neutron shield shell could result in less of the neutron shield fluid and increases in dose rates.
APPLICABLE SAFETY ANALYSIS	The TRANSFER CASK thermocouple measures the structural shell temperature, which is correlated through analysis to assure the TRANSFER CASK liquid neutron shield does not freeze (Reference 1).
LCO	Limiting the TRANSFER CASK structural shell temperature for TRANSFER OPERATIONS outside the plant's fuel building maintains the temperature of the liquid neutron shield above freezing, assuring that the TRANSFER CASK neutron shield shell maintains its integrity.
APPLICABILITY	This temperature limit applies to a TRANSFER CASK during on-site TRANSFER OPERATIONS outside the plant's fuel building.
ACTIONS	A.1 If the TRANSFER CASK does not meet the temperature limit, then actions should be taken to bring the temperature into compliance with the LCO. This may include such things as use of insulating blankets or heated blankets. The Completion Time is adequate to provide these mitigating measures and bring the temperature within the LCO. B.1 - B.4 If the TRANSFER CASK temperature cannot be brought within the LCO, then it is necessary to move the TRANSFER CASK to a heated area and inspect the neutron shield for damage. The Completion Time is adequate to perform the Required Actions.

SURVEILLANCE REQUIREMENTS	SR 3.4.1.1 The TRANSFER CASK shell temperature is to be verified once after a CANISTER with fuel assemblies is placed in it while the TRANSFER CASK is horizontal outside the plant's fuel building, and every hour thereafter during TRANSFER OPERATIONS.
REFERENCES	1. FuelSolutions™ Storage System FSAR, Section 4.4.

B 3.5 TRANSFER CASK RADIATION PROTECTION

B 3.5.1 Transfer Cask Surface Contamination

BASES

BACKGROUND	A TRANSFER CASK with an empty CANISTER is placed in the spent fuel pool and loaded with spent fuel assemblies. As a result, the TRANSFER CASK surface may become contaminated with radioactive material from the spent fuel pool water. The non-fixed surface contamination on the TRANSFER CASK is removed to prevent loose contamination from becoming airborne particulate.
APPLICABLE SAFETY ANALYSIS	The radiation protection and occupational exposure analyses are based on the assumption that the TRANSFER CASK surfaces are decontaminated (Reference 1). Failure to decontaminate the surfaces of the TRANSFER CASK could lead to higher than projected occupational doses.
LCO	The specified maximum non-fixed contamination level complies with the guidance in NRC IE Circular No. 81-07 (Reference 2). By meeting these limits, the shipping container removable surface contamination requirements of 10CFR71.87(i)(l) (Reference 3) and 49CFR173.443 (Reference 4) are met. Consequently, these contamination levels are consistent with the exposure limits for the general public. This will assure that contamination limits of the inner surfaces of the storage cask are not exceeded and will alleviate potential releases of airborne particulate to the environment.
APPLICABILITY	Verification that the TRANSFER CASK surface contamination is less than the LCO limit is performed prior to TRANSFER OPERATIONS, prior to the TRANSFER CASK leaving the plant's fuel building for horizontal canister transfer.
ACTIONS	A.1 If the removable external surface contamination of a TRANSFER CASK is not within the LCO limits, actions must be initiated to decontaminate the TRANSFER CASK and bring the removable surface contamination within limits. The Completion Time of 7 days is appropriate given that the time needed to complete the decontamination is indeterminate.

(continued)

BASES

ACTIONS (continued)	B.1 If the contamination on the surface of the TRANSFER CASK cannot successfully be removed within 7 days, the cause for the inability to remove the contamination must be determined and corrected. The TRANSFER CASK must be decontaminated to meet the LCO prior to moving the TRANSFER CASK out of the fuel building for horizontal CANISTER transfer.
SURVEILLANCE REQUIREMENTS	SR 3.5.1.1 This SR verifies that removable surface contamination on the TRANSFER CASK is lower than the limits of the LCO. The surveillance is performed using smear surveys to detect removable surface contamination. Performing the verification prior to TRANSFER OPERATIONS assures that TRANSFER OPERATIONS are performed without spreading loose contamination.
REFERENCES	1. FuelSolutions™ Storage System FSAR, Sections 10.3 and 10.4. 2. IE Circular No. 81-07, Nuclear Regulatory Commission, 1981. 3. Title 10, U.S. Code of Federal Regulations, Part 71. 4. Title 49, U.S. Code of Federal Regulations, Part 173.

This page intentionally left blank.

13. QUALITY ASSURANCE

This chapter establishes the Quality Assurance (QA) program being applied to the design, analysis, fabrication, assembly, and testing of FuelSolutions™ Storage System components that are important to safety and the support equipment that is either important to safety or safety-related, as defined in Section 2.1.1 of this FSAR.

All quality-related activities will be controlled under an NRC-approved quality assurance program, meeting the requirements of 10CFR50,[1] Appendix B; 10CFR71,[2] Subpart H; and 10CFR72,[3] Subpart G. For activities that are performed by Energy*Solutions* Spent Fuel Division, Inc. (Energy*Solutions* SFD), this program is contained in the approved Energy*Solutions* SFD Quality Assurance Program (QAP).[4] The licensee's QA program will be used to control activities performed by the licensee.

Energy*Solutions* SFD is responsible for the FuelSolutions™ SFMS, as discussed in Section 1.3 of this FSAR. Energy*Solutions* SFD implements its Quality Assurance Program for nuclear quality-related activities. The Energy*Solutions* SFD Quality Assurance Manual has been approved by the NRC as meeting the requirements of 10CFR72 under separate correspondence. The Energy*Solutions* SFD Quality Assurance Procedures are used to implement the provisions of the Energy*Solutions* SFD Quality Assurance Manual for the nuclear quality-related activities associated with the FuelSolutions™ SFMS.

The Energy*Solutions* SFD Quality Assurance Program will be applied to the important to safety (10CFR72) components, to the important to safety (10CFR72) and support equipment of the FuelSolutions™ SFMS, and to the associated nuclear quality-related activities. In addition to compliance with 10CFR72, Subpart G, the Energy*Solutions* SFD Quality Assurance Procedures are based on the requirements of Regulatory Guide 7.10.[5] Guidance is also taken from NUREG/CR-6407.[6] These quality procedures are used to establish the quality category of components, subassemblies, and piece parts according to each item's importance to nuclear safety.

The matrix in Table 13-1 shows the 10CFR72, Subpart G, criteria and the respective sections of the Energy*Solutions* SFD Quality Assurance Manual that address the criteria.

---

[1] Title 10, U.S. Code of Federal Regulations, Part 50 (10CFR50), *Domestic Licensing of Production and Utilization Facilities*, 1995.

[2] Title 10, U.S. Code of Federal Regulations Part 71 (10CFR71), *Packaging Requirements for Transportation of Radioactive Materials*, 1996.

[3] Title 10, U.S. Code of Federal Regulations, Part 72 (10CFR72), *Licensing Requirements for the Independent Storage of Spent Nuclear Fuel and High-Level Radioactive Waste*, 1995.

[4] Energy*Solutions* Spent Fuel Division, Inc. Quality Assurance Program, NRC Docket No 71-0804.

[5] Regulatory Guide 7.10, *Establishing Quality Assurance Programs for Packaging Used in the Transport of Radioactive Material*, U.S. Nuclear Regulatory Commission, June 1974.

[6] NUREG/CR-6407, *Classification of Transportation Packaging and Dry Spent Fuel Storage System Components According to Importance to Safety*, U.S. Nuclear Regulatory Commission, February 1996.

Table 13-1 - Quality Assurance Criteria Matrix

10CFR72, Subpart G		Energy*Solutions* SFD Quality Assurance Manual
Section	**Criteria**	**Section**
72.142	Organization	1
72.144	Quality Assurance Program	2
72.146	Design Control	3
72.148	Procurement Document Control	4
72.150	Instructions, Procedures, and Drawings	5
72.152	Document Control	6
72.154	Control of Purchased Material, Equipment, and Services	7
72.156	Identification and Control of Material, Parts, and Components	8
72.158	Control of Special Processes	9
72.160	Licensee Inspection	10
72.162	Test Control	11
72.164	Control of Measuring and Test Equipment	12
72.166	Handling, Storage, and Shipping Control	13
72.168	Inspection, Test, and Operating Status	14
72.170	Nonconforming Materials, Parts, or Components	15
72.172	Corrective Action	16
72.174	Quality Assurance Records	17
72.176	Audits	18

14. DECOMMISSIONING

This chapter demonstrates that adequate provisions are provided to facilitate the transfer of title for the SNF stored in the FuelSolutions™ SFMS, from the licensee to the DOE, following ISFSI storage. In addition, it is shown that adequate provisions are provided for the future decontamination and disposal of the two components described in this FSAR, the FuelSolutions™ W150 Storage Cask and FuelSolutions™ W100 Transfer Cask, as well as for the FuelSolutions™ canisters. A conceptual decommissioning plan for these components, with several alternatives, is also presented in this chapter.

Much of the burden placed on a licensee for ISFSI decommissioning is alleviated with the use of the FuelSolutions™ SFMS. The FuelSolutions™ SFMS uses canisters that do not have to be opened and the fuel repackaged for shipment from the licensee's site. This eliminates the need for the licensee to dispose of the canister shell, closure plates, and internal basket assembly as waste.

The designs of the transfer cask, storage cask, and support equipment (described in Section 1.2.1 of this FSAR) do not rely on the licensee's spent fuel pool, or other special facilities or equipment, to transfer a loaded canister from the storage cask to the transportation cask, as described in Section 8.2.4 of this FSAR. The end-of-life mission of the transfer cask and storage cask to decommission the ISFSI are an integral design feature of the FuelSolutions™ SFMS. For example, the segmented design of the FuelSolutions™ W150 Storage Cask allows it to be disassembled for decommissioning or transported for reuse at another ISFSI, CISF, or a DOE facility (e.g., MGDS).

The following sections identify and conservatively quantify the types of waste generated and present conceptual decommissioning alternatives.

This page intentionally left blank.

14.1 Activation Analysis

Because of the low levels of spontaneous fission and subcritical multiplication in the SNF during the storage period, the activation of the storage cask materials is approximated using simple transport theory and previous activation studies performed for decommissioned nuclear power plants (PB85-239796,[1] NUREG/CR-0130,[2] and NUREG/CR-3474[3]). Appropriate scaling is performed to properly characterize the design basis SNF and the FuelSolutions™ W150 Storage Cask configuration. The activation analyses are based on a canister neutron source strength of 4.9×10^{10} neutrons/sec-canister, which is bounding for all W21 and W74 canister payloads allowed by the canister cooling tables. The concrete analysis is based on scaling the activation results of PB85-239796, which was performed to evaluate the activation of bioshield concrete in nuclear power facilities. In PB85-239796, these analyses were used to project improved plant designs that would minimize the activation burden during plant decommissioning.

The activation period for the storage cask and canister is assumed to be 20 years. During the 20-year storage interval, the SNF undergoes decay. The method employed to determine the estimated specific activities for the canister and the storage cask metal components applies neutron flux scaling to reactor vessel activation, as calculated in NUREG/CR-0130. Note that this provided the basis for activation estimates that were shown in NUREG/CR-3474 to compare with measured data from actual plant components. NUREG/CR-0130 calculated the activation of PWR system components resulting from 30 years of equivalent full power operation followed by one year of cooling time. The storage cask and canister activation analyses assume 30 years of activation by a constant neutron flux, held at the initial value with no credit taken for decay. This is followed by one year of shutdown. For this application, the assumption of one year of shutdown is equivalent to assuming that a licensee waits another year before disposal of the canister.

Modeling the 20-year storage period activation from a decaying neutron source, using 30 years of activation at a constant initial neutron source, includes a significant factor of conservatism. In addition, the use of a bounding fuel assembly neutron source term is much more severe than that which is representative for a typical canister loading. Thus, it is judged that the estimates as reported herein are representative of a typical canister and storage cask over their 100-year service life, particularly since the source term in the out-years is substantially attenuated.

14.1.1 Storage Cask Activation

As a result of the measures taken during fuel loading to preclude canister contamination, the storage cask is not anticipated to be contaminated. However, if there is any contamination, it would be expected to be on the steel liner, which could be decontaminated by standard

---

[1]PB85-239796, *Design Concepts to Minimize the Activation of the Biological Shield of Light-Water Reactors,* Commission of the European Communities, Luxembourg, 1985.

[2]NUREG/CR-0130, *Technology, Safety and Costs of Decommissioning a Reference Pressurized Water Reactor Power Station*, R. I. Smith, G. J. Konzek, W. E. Kennedy, Jr., Pacific Northwest Laboratory, 1978.

[3]NUREG/CR-3474, *Long-lived Activation Products in Reactor Materials*, J. C. Evans, E. L. Lepel, R. W. Sanders, C. L. Wilkerson, W. Silker, C. W. Thomas, K. H. Abel, D. R. Robertson, Pacific Northwest Laboratory, August 1984.

techniques. The storage cask materials subject to activation include the steel internals, concrete, and reinforcing steel. Minimal activation of the steel materials is anticipated due to the relatively low neutron flux. The low neutron flux is also anticipated to result in minimal concrete activation; however, the extent of concrete activation is dependent on the trace elements susceptible to activation that are present in the concrete. In addition, the ISFSI pad beneath the storage cask bottom end penetration may be subject to activation although the neutron flux is much less (by a factor of 32) than that experienced by the storage cask mid-wall. Maximum activation levels in the pad concrete are therefore lower than those of the cask concrete shielding by a similar factor. A radiation survey or sampling can be performed by the licensee during ISFSI decommissioning to determine actual activation.

The estimated activation of metal and concrete materials is shown in Table 14.1-1 and Table 14.1-2, respectively. The storage cask metal component activity is dominated by Fe-55 and Co-60, but these concentrations are only in the nanocurie/gram range and lower. The concrete components of the storage cask also have extremely low activations, dominated by Ca-45 and Fe-55 with activities near 20 picocuries/gram. Based on the bounding flux and activation profiles in PB85-239796, this extremely low level of activation in the concrete is projected to extend less than 15 inches from the inner concrete radius of the storage cask. The ISFSI pad concrete beneath the storage cask would be activated to a depth much less than 15 inches, due to the much lower neutron flux levels seen by the pad (as discussed above). With the use of a more representative source term and neutron flux expected for dry storage conditions rather than in-reactor conditions, activation depths will be much less.

Calculations have been performed for the activated metals and concrete in the storage cask, in accordance with the waste classification requirements in 10CFR61, Subpart D.[4] The results from these calculations for package activities and fraction of 10CFR61 Class A waste limits are also presented in Table 14.1-1 and Table 14.1-2. These package activities are many orders of magnitude below the Class A waste limits. Therefore, the activated metals and concrete in the storage cask can be disposed of as Class A waste, with no additional decay required.

14.1.2 Transfer Cask Activation

The FuelSolutions™ W100 Transfer Cask is used for very limited periods during initial canister loading and to transfer a FuelSolutions™ canister from a FuelSolutions™ W150 Storage Cask to a transportation cask for off-site transport. The transfer cask may become slightly radioactive due to neutron activation during these activities. In a typical canister loading campaign, the transfer cask contains a canister loaded with SNF for several days. The longest duration activities are seal welding, weld examination, and vacuum drying. A one-week exposure period for each canister loading, transfer, and retrieval sequence, and 100 total canisters to be handled over the transfer cask 40-year operating life are assumed. This yields approximately a one-year total exposure time for a transfer cask.

The results of the activation analysis are shown in Table 14.1-3. Overall, the calculated activation is extremely low, dominated by Fe-55 and Co-60 with activities less than a nanocurie/gram. Calculations have been performed for the transfer cask as a disposal package, in

[4] Title, 10, U.S. Code of Federal Regulations, Part 61 (10CFR61), *Licensing Requirements for Land Disposal of Radioactive Wastes*, 1996.

accordance with the waste classification requirements in 10CFR61, Subpart D. The results of these calculations for package activities and fraction of 10CFR61 Class A waste limits are also presented in Table 14.1-3. These package activities are many orders of magnitude below the Class A waste limits. Therefore, the transfer cask can be disposed of as Class A waste, with no additional decay required.

14.1.3 Canister Activation

The FuelSolutions™ canisters are designed to be transportable, and therefore are not expected to be opened for removal of SNF prior to shipment. Because of the relatively low neutron flux, the activation of FuelSolutions™ canister components (e.g., basket assembly and canister shell) is expected to be low. On a relative basis, canister contamination activity associated with SNF CRUD is expected to be small. Therefore, only the activation source term resulting from sustained exposure to the SNF neutron flux is presented here.

An estimate of the activation of the FuelSolutions™ canister is presented in Table 14.1-4. All specific activities are very low dominated by Fe-55 and Co-60, with activity in the nanocurie/gram range. Calculations have been performed for the FuelSolutions™ canister components as a disposal package, in accordance with the waste classification requirements in 10CFR61, Subpart D. The results from these calculations for package activities and fraction of 10CFR61 Class A waste limits are also presented in Table 14.1-4. These package activities are many orders of magnitude below the Class A waste limits. Therefore, the FuelSolutions™ canister components can be disposed of as Class A waste, with no additional decay required.

Table 14.1-1 - Estimated Storage Cask Activation - Metal Components

Principal Nuclides	Half Life	Guide Rails, Liner, and Bottom Plate			Heat Shield		
		Specific Activity (μCi/gm)	Package Activity (Ci/m^3)	Fraction of 10CFR61 Class A Limit	Specific Activity (μCi/gm)	Package Activity (Ci/m^3)	Fraction of 10CFR61 Class A Limit
Nb-95	35 days	8.47E-11	3.12E-01[(1)]	4.46E-04[(1)]	1.75E-11	6.46E-02[(1)]	9.23E-05[(1)]
Fe-59	45 days	6.71E-06			1.39E-06		
Co-58	72 days	1.35E-05			2.80E-06		
Zr-95	65 days	1.01E-09			2.09E-10		
Zn-65	245 days	8.59E-10			1.78E-10		
Mn-54	300 days	1.39E-03			2.88E-04		
Fe-55	2.7 years	3.84E-02			7.95E-03		
Co-60	5.27 years	4.54E-03	3.56E-02	5.09E-05	9.38E-04	7.35E-03	1.05E-05
Ni-63	100 years	2.60E-04	2.04E-03	5.83E-05	5.39E-05	4.22E-04	1.21E-05
C-14	5,750 years	1.31E-06	1.03E-05	1.29E-06	2.71E-07	2.12E-06	2.65E-07
Ni-59	80,000 years	2.21E-06	1.73E-05	7.86E-07	4.57E-07	3.58E-06	1.63E-07

Note:

(1) Values represent the total for all nuclides with half-lives less than five years.

Table 14.1-2 - Estimated Storage Cask Activation - Concrete Components

Principal Nuclides	Half Life	Specific Activity (μCi/gm)	Package Activity (Ci/m^3)	Fraction of 10CFR61 Class A Limit
Tm-170	2.86 days	1.72E-05	1.10E-03[(1)]	1.57E-06[(1)]
Ca-45	162.7 days	2.28E-04		
Cs-134	2.07 years	1.18E-05		
Fe-55	2.7 years	1.90E-04		
Co-60	5.27 years	6.25E-05	1.54E-04	2.20E-07
Eu-154	8.59 years	2.15E-06	N/A	N/A
Eu-152	13.48 years	1.35E-05	N/A	N/A
Ca-41	103,000 years	5.33E-06	N/A	N/A

Note:

(1) Values represent the total for all nuclides with half-lives less than five years.

Table 14.1-3 - Estimated Transfer Cask Activation

Principal Nuclides	Half Life	Specific Activity (μCi/gm)	Package Activity (Ci/m^3)	Fraction of 10CFR61 Class A Limit
Nb-95	35 days	2.54E-11	2.66E-04[(1)]	3.79E-07[(1)]
Fe-59	45 days	2.26E-06		
Co-58	72 days	5.98E-04		
Zr-95	65 days	2.51E-11		
Zn-65	245 days	9.66E-10		
Mn-54	300 days	1.85E-04		
Fe-55	2.7 years	3.86E-03		
Co-60	5.27 years	1.73E-03	9.89E-05	1.41E-07
Ni-63	100 years	8.27E-05	4.73E-06	1.35E-07
C-14	5,750 years	8.40E-08	4.80E-09	6.00E-10
Nb-94	20,000 years	1.99E-09	1.14E-10	5.70E-09
Ni-59	80,000 years	6.29E-07	3.60E-08	1.64E-09

Note:
(1) Values represent the total for all nuclides with half-lives less than five years.

Table 14.1-4 - Estimated FuelSolutions™ Canister Components[1] Activation

Principal Nuclides	Half-life	Specific Activity (μCi/gm)	Package Activity (Ci/m^3)	Fraction of 10CFR61 Class A Limit
Nb-95	35 day	2.54E-11	3.40E-03[2]	4.86E-06[2]
Fe-59	45 day	2.27E-06		
Co-58	72 day	6.17E-04		
Zr-95	65 day	2.56E-11		
Zn-65	245 day	1.50E-09		
Mn-54	300 day	3.25E-04		
Fe-55	2.7 year	1.70E-02		
Co-60	5.27 year	1.38E-02	2.61E-03	3.73E-06
Ni-63	100 year	2.25E-03	4.26E-04	1.22E-05
C-14	5,750 year	2.52E-06	4.77E-07	5.96E-08
Nb-94	20,000 year	5.97E-08	1.13E-08	5.65E-07
Ni-59	80,000 year	1.89E-05	3.58E-06	1.63E-07

Notes:

(1) Includes canister shell assembly, basket assembly, shield plugs, and closure plates.

(2) Values represent the total for all nuclides with half-lives less than five years.

This page intentionally left blank.

14.2 Decommissioning Approach

The activation analysis indicates that some of the storage cask, transfer cask and canister materials could become activated to relatively low levels. The preferred decommissioning approach to assure exposures remain ALARA is to reuse these casks and canisters to the maximum extent practicable, provided they have not reached their design life, rather than to place new additional casks or canisters in service. Once the casks or canisters are surveyed and any potential surface contamination is removed by conventional decontamination techniques, they could be reused at another licensee's ISFSI or at a CISF.

An alternative approach to decommissioning is to keep the storage casks, transfer cask, and canisters at the licensee's ISFSI and to allow them to decay until they can be released for unrestricted use per Regulatory Guide 1.86.[5] During the decay period, the casks and canisters can be left intact and maintained in a sound condition. Minimal surveillance and maintenance would be required, and access to the ISFSI would be secured to provide controlled access. If these components remain on-site until they can be released, the estimated decay time is within the time allowed by the NRC decommissioning rule.[6] Anticipated activities for ISFSI operation include preventative and corrective maintenance on required security systems, area lighting, and general area maintenance; routine radiological surveys of the ISFSI area; and an environmental and radiation monitoring program.

Based on a review of the FuelSolutions™ W150 Storage Cask activation, an activation of less than a depth of 15 inches in the concrete wall segments is conservatively estimated. It is possible to disassemble the storage cask, remove the inner liner, and remove the activated concrete by scabbling, diamond wire cutting, or other conventional decontamination techniques.

Following removal of the storage casks, the ISFSI pad areas beneath the storage casks should be checked for activation. If found to be activated, appropriate measures should be incorporated in the decommissioning plan to facilitate attenuation and free release of this material, or removal and disposal of the activated material as low-level waste.

Westinghouse successfully decommissioned Public Service Company of Colorado's Fort St. Vrain Station by removing over 1,000 tons of activated concrete by these methods.[7] The experience gained during the Fort St. Vrain plant decommissioning shows that localized concrete activation can be affected by penetrations and gaps in materials. The regions near the joints of the storage cask wall segments, as well as inlet and outlet vents, should be carefully characterized for localized activation.

The preferred decommissioning approach for the FuelSolutions™ canister is to ship the loaded canister in a transportation cask off-site to a federal facility, such as the DOE MGDS. The canister would be placed in an associated engineered barrier system intact for permanent

---

[5]Regulatory Guide 1.86, *Termination of Operating Licenses for Nuclear Reactors*, U.S. Nuclear Regulatory Commission, June 1974.

[6]Federal Register, Volume 61, No. 146, *Final Rule, Decommissioning of Nuclear Power Reactors*, U.S. Nuclear Regulatory Commission, July 29, 1996.

[7]V. F. Likar and G. T. Howard, "Decommissioning Fort St. Vrain," *RadWaste Magazine*, September 1995.

disposal. This approach avoids rehandling of the fuel and the associated added occupational exposure. In addition, there is no residual contaminated or activated material to dispose of.

In the event that the FuelSolutions™ canister is reopened for fuel removal, there are several decommissioning alternatives, as follows:

- The canister could be refurbished and reused to store additional SNF, provided it had not reached its design life.
- The empty canister could be placed in a SAFSTOR mode until the activation products decay out and then be free released for disposal as commercial waste.
- The empty FuelSolutions™ canister could be resealed, decontaminated as necessary, and a radiological survey performed. The canister could then be shipped to a low level waste disposal site. This practice has been used on large reactor coolant system components with much higher levels of activation, such as steam generators and reactor vessels removed from decommissioned nuclear power plants.

The FuelSolutions™ family of canisters are designed to provide confinement of radioactive materials through the use of a stainless steel canister shell and two welded closure plates. In addition, the transfer cask's polished exterior surface is readily decontaminated. Because of the absence of contaminated sources, the ISFSI concrete pad if activation levels are acceptable, security fencing, lighting, and utility structures can be free released after the final radiological survey. It is strongly recommended that the licensee perform a pre-construction survey, which will be useful as a baseline for free release of low activity materials.

14.3 Disposal of Residual Radioactive Materials

Based on the suggested decommissioning approaches presented—specifically "store and then free release"—there is no residual radioactive material for disposal. If a licensee desires to remove the activated portion of the storage cask and any activated portion of the ISFSI pad prior to the decay time required for free release and ship it to a low level waste disposal facility, the estimated volumes (per storage cask) derived from the activation analysis are:

- Metal components (based on removal of the entire component)
  - Guide rails - 2.4 ft^3
  - Heat shield - 3.1 ft^3
  - Steel liner - 50 ft^3
  - Steel reinforcement, bottom plate - 2.6 ft^3
- Concrete (based on a bounding 15-inch activation depth for storage cask wall segments)
  - Wall segments - <544 ft^3
- ISFSI pad (based on a bounding 12-inch activation depth)
  - Pad underneath storage cask - <30 ft^3

The actual radionuclide concentration and volume of activated steel and concrete will depend on the actual fuel source term and service history of the cask. Radiological survey information in the final decommissioning plan prepared by the licensee should verify the waste classification and the acceptability of the disposal method.

Based on the activation analysis of the transfer cask and canister, all transfer cask and canister components can be disposed of as Class A waste, with no additional decay required.

In summary, the low levels of activation calculated for the FuelSolutions™ Storage System components will allow decontamination and decommissioning to be conducted in a manner that adequately protects the health and safety of the public. The determination of the final decommissioning plan for an ISFSI, CISF, or DOE MGDS using the FuelSolutions™ SFMS is dependent on the methodology for disposal of the SNF, the actual exposure experienced by the canister during dry storage, and economic factors at the time of decommissioning.

This page intentionally left blank.