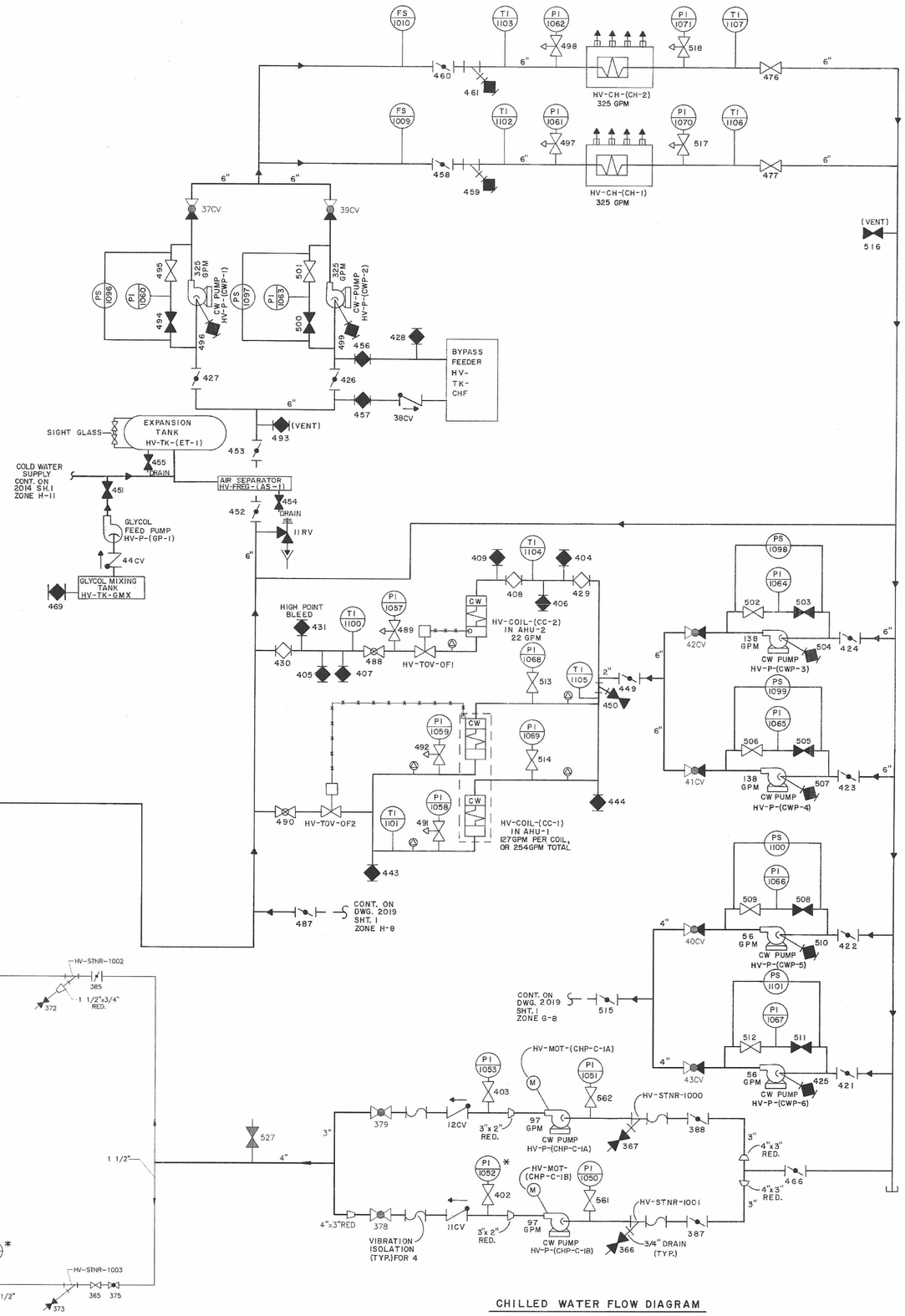


CHILLED WATER FLOW DIAGRAM

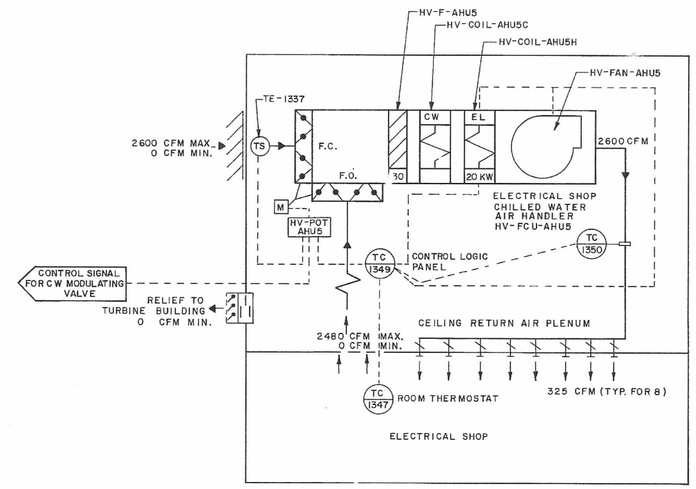


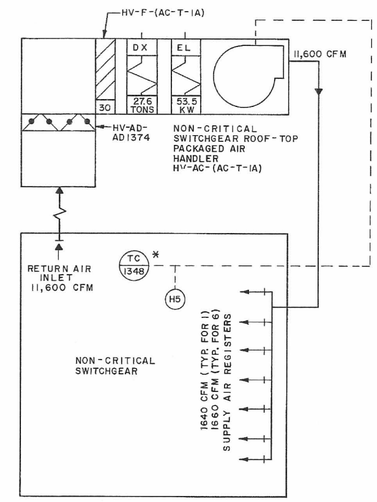


NON-CRITICAL SWITCHGEAR ROOF-TOP HVAC

REFERENCES:

1) FOR CONTROLS FOR CONTROL BLDG. H&V UNIT 1-HV-C-1A. SEE HONEYWELL DWG. 932-89003, SHT. 1.
2) FOR CONTROLS FOR ELECT. SHOP AHU HV-FCU-AHU5 SEE HONEYWELL DWG. 932-89003, SHT. 2.
3) BURNS & ROE DWG. 2018.

NOTES:

1) * FURNISHED WITH PUMPS OR CW COIL UNITS.
2) Ⓐ – AIR BLEED

NON CONTROLLED PRINT
MAR 20 2007
N.P.P.D.. RIMS

D-23

AS BUILT
454236406

SCAN/CADD DWG
DO NOT REVISE MANUALLY

* THIS DRAWING GENERATED BY NPPD

FOR PREVIOUS REVISIONS, SEE SUPERSEDED CARDS.

REVISIONS BY N.P.P.D.

| NO. | REVISIONS | DFT | CKD | APP | DATE |
|---|---|---|---|---|---|
| N05 | RCR 2000-0968 (DCN 01-0011) | RGA | DLR | KG | 2/7/01 |
| N06 | DCN 05-0397 | RGA | DLR | KG | 1/9/05 |
| N07 | CR2005-03960 (DCN 05-0786) | RGA | RGA | DDP | 8/3/05 |

SIGNIFICANT NUMBER | GROUP | 1 | 2 | 3 | 4 | 5 | 6

FLOW DIAGRAM CHILLED WATER SYSTEM ELECTRICAL SHOP, NON-CRITICAL SWITCHGEAR, CONTROL & OFFICE BLDG. COOPER NUCLEAR STATION

DRAWN DJF DATE 10/15/90
CHECKED JW DATE 10/15/90
APPROVED JRH DATE 10/16/90
FILMED

* BURNS & ROE

2019 SH 2 | REVISION N07 | CARD FILE C005.3029

REVISIONS | NO.