Westinghouse

Westinghouse Electric Company
Nuclear Power Plants
P.O. Box 355
Pittsburgh, Pennsylvania 15230-0355
USA

U.S. Nuclear Regulatory Commission
ATTENTION: Document Control Desk
Washington, D.C. 20555

Direct tel: 412-374-6306
Direct fax: 412-374-5005
e-mail: sterdia@westinghouse.com

Your ref: Project Number 740
Our ref: DCP/NRC1899

May 24, 2007

Subject: AP1000 COL Standard Technical Report Submittal of APP-GW-GLR-125, Revision 0

In support of Combined License application pre-application activities, Westinghouse is submitting Revision 0 of AP1000 Standard Combined License Technical Report Number 125. This report identifies and justifies standard changes to the AP1000 Design Control Document. Changes to the Design Control Document identified in Technical Report Number 125 are intended to be incorporated into FSARs referencing the AP1000 design certification or incorporated into an amended design certification. This report is submitted as part of the NuStart Bellefonte COL Project (NRC Project Number 740). The information included in this report is generic and is expected to apply to all COL applications referencing the AP1000 Design Certification.

The purpose for submittal of this report was explained in a March 8, 2006 letter from NuStart to the NRC.

Pursuant to 10 CFR 50.30(b), APP-GW-GLR-125, Revision 0, "Corrections to Tier 1 ITAAC 2.2.4 and Tier 2 Section 3.6.1.3.3 and 10.3," Technical Report Number 125, is submitted as Enclosure 1 under the attached Oath of Affirmation.

It is expected that when the NRC review of Technical Report Number 125 is complete, the changes to the AP1000 DCD identified in Technical Report 125 will be considered approved generically for COL applicants referencing the AP1000 Design Certification.

Questions or requests for additional information related to content and preparation of this report should be directed to Westinghouse. Please send copies of such questions or requests to the prospective applicants for combined licenses referencing the AP1000 Design Certification. A representative for each applicant is included on the cc: list of this letter.

Westinghouse requests the NRC to provide a schedule for review of the technical report within two weeks of its submittal.



D079

Very truly yours,

A. Sterdis, Manager
Licensing and Customer Interface
Regulatory Affairs and Standardization

/Attachment

1. "Oath of Affirmation," dated May 24, 2007

/Enclosure

1. APP-GW-GLR-125, Revision 0, "Corrections to Tier 1 ITAAC 2.2.4 and Tier 2 Section 3.6.1.3.3 and 10.3," Technical Report Number 125

| | | | | | |
|---|---|---|---|---|---|
| cc: | D. Jaffe | - | U.S. NRC | 1E | 1A |
| | E. McKenna | - | U.S. NRC | 1E | 1A |
| | G. Curtis | - | TVA | 1E | 1A |
| | P. Grendys | - | Westinghouse | 1E | 1A |
| | P. Hastings | - | Duke Power | 1E | 1A |
| | C. Ionescu | - | Progress Energy | 1E | 1A |
| | D. Lindgren | - | Westinghouse | 1E | 1A |
| | A. Monroe | - | SCANA | 1E | 1A |
| | M. Moran | - | Florida Power & Light | 1E | 1A |
| | C. Pierce | - | Southern Company | 1E | 1A |
| | E. Schmiech | - | Westinghouse | 1E | 1A |
| | G. Zinke | - | NuStart/Entergy | 1E | 1A |
| | A. Pfister | | Westinghouse | 1E | 1A |

ATTACHMENT 1

"Oath of Affirmation"

ATTACHMENT 1

UNITED STATES OF AMERICA

NUCLEAR REGULATORY COMMISSION

| | |
|---|---|
| In the Matter of: | ) |
| NuStart Bellefonte COL Project | ) |
| NRC Project Number 740 | ) |

APPLICATION FOR REVIEW OF
"AP1000 GENERAL COMBINED LICENSE INFORMATION"
FOR COL APPLICATION PRE-APPLICATION REVIEW

W. E. Cummins, being duly sworn, states that he is Vice President, Regulatory Affairs and Standardization, for Westinghouse Electric Company; that he is authorized on the part of said company to sign and file with the Nuclear Regulatory Commission this document; that all statements made and matters set forth therein are true and correct to the best of his knowledge, information and belief.

W. E. Cummins
Vice President
Regulatory Affairs & Standardization

Subscribed and sworn to
before me this 24th day
of May 2007.

COMMONWEALTH OF PENNSYLVANIA
Notarial Seal
Debra McCarthy, Notary Public
Monroeville Boro, Allegheny County
My Commission Expires Aug. 31, 2009
Member, Pennsylvania Association of Notaries

Debra McCarthy
Notary

ENCLOSURE 1

APP-GW-GLR-125, Revision 0

"Corrections to Tier 1 ITAAC 2.2.4 and Tier 2 Section 3.6.1.3.3 and 10.3"

Technical Report 125

# AP1000 DOCUMENT COVER SHEET

TDC: _____ Permanent File: _____ APY _____

RFS#: _____ RFS ITEM #: _____

| AP1000 DOCUMENT NO. | REVISION NO. | | ASSIGNED TO |
|---|---|---|---|
| APP-GW-GLR-125 | 0 | Page 1 of 8 12 PAGE 5/22/07 | WINTERS |

ALTERNATE DOCUMENT NUMBER: TR-125 WORK BREAKDOWN #: GW

ORIGINATING ORGANIZATION: Westinghouse Electric Company

TITLE: Corrections to Tier 1 ITAAC 2.2.4 and Tier 2 Section 3.6.1.3.3 and 10.3

| ATTACHMENTS: | DCP #/REV. INCORPORATED IN THIS DOCUMEN REVISION: |
|---|---|
| N/A | N/A |
| CALCULATION/ANALYSIS REFERENCE: N/A | |

| ELECTRONIC FILENAME | ELECTRONIC FILE FORMAT | ELECTRONIC FILE DESCRIPTION |
|---|---|---|
| APP- GW-GLR-125.doc | Microsoft Word | APP- GW-GLR-125.doc |

**(C) WESTINGHOUSE ELECTRIC COMPANY LLC – 2007**

☒ WESTINGHOUSE CLASS 3 (NON PROPRIETARY)

Class 3 Documents being transmitted to the NRC require the following two review signatures in lieu of a Form 36.

| | | |
|---|---|---|
| LEGAL REVIEW Eric S. Gillen | SIGNATURE/DATE | 5-22-07 |
| PATENT REVIEW Mike Corletti | SIGNATURE/DATE | 5-23-07 |

☐ WESTINGHOUSE PROPRIETARY CLASS 2

This document is the property of and contains Proprietary Information owned by Westinghouse Electric Company LLC and/or its subcontractors and suppliers. It i transmitted to you in confidence and trust, and you agree to treat this document in strict accordance with the terms and conditions of the agreement under which it wa provided to you.

| | | |
|---|---|---|
| ORIGINATOR A. Pfister | SIGNATURE/DATE | 5/21/07 |
| REVIEWERS | SIGNATURE/DATE | |
| | | |
| VERIFIER P. Greco | SIGNATURE/DATE 5/21/07 | VERIFICATION METHOD Independent 3-Pass Review |
| AP1000 RESPONSIBLE MANAGER J. Winters | SIGNATURE* | APPROVAL DATE 5/22/07 |

* Approval of the responsible manager signifies that document is complete, all required reviews are complete, electronic file is attached and document is released for use.

# AP1000 Standard Combined License Technical Report

## Corrections to Tier 1 ITAAC 2.2.4 and Tier 2 Section 3.6.1.3.3 and 10.3

Westinghouse Electric Company LLC
P.O. Box 355
Pittsburgh, PA 15230-0355

© 2007 Westinghouse Electric Company LLC
All Rights Reserved

TABLE OF CONTENTS

1.0 Introduction ..... 4
2.0 Technical background ..... 4
3.0 Regulatory impact ..... 4
4.0 References ..... 5
5.0 DCD Markup ..... 6

# 1.0 INTRODUCTION

In preparation for submittal of recertification of the AP1000 Design Control Document, Westinghouse discovered an inconsistency between the Tier 1 ITAACS in DCD Table 2.2.4-1, the description of specific piping protection considerations in Tier 2 Section 3.6.1.3.3, and the requirements of the Post Accident Monitoring System (PAMS) in Table 7.5-1 and Table 3.11-1. Each section specifies the environmental requirements for instrumentation in the Steam Generator System. This report is being issued to clarify the discrepancy between the three sections. DCD Table 2.2.4-1 and section 3.6.1.3.3 are being corrected to reflect the PAMS Table 7.5-1 and Table 3.11-1. The PAMS Table in 7.5-1 and the Environmentally Qualified Electrical and Mechanical Equipment in Table 3.11-1 correctly reflect the intent of the design for the SGS instrumentation in AP1000.

An additional discrepancy was discovered between item 12b in ITAAC Table 2.2-4 and Figure 10.3.2-1 (both sheets). The ITAAC specifies that valves V040A/B and V057A/B's position is as is on loss of motive power. However, Figure 10.3.2-1 denotes these valves as **FC**, which is used to denote fail closed. Valves V040A/B and V057A/B are the main feedwater and main steam isolation valves.

# 2.0 TECHNICAL BACKGROUND

Four main steam line steam generator pressure elements (SGS-031, SGS-033, SGS-035, and SGS-037) and four startup feedwater flow elements (SGS-055A/B and SGS-056A/B) are located outside containment, outside the main steam isolation valve (MSIV) compartment, and outside the Lower Annulus Valve Room. These instruments do not have to be qualified for a harsh environment since they are outside containment, the MSIV compartment, and the Lower Annulus Valve Room. The sensing lines for both the pressure elements and the flow elements are run outside of these rooms. Therefore, these instruments need to be suitable for a mild environment as indicated in DCD Table 7.5-1 and Table 3.11-1. This Technical Report revises DCD Table 2.2.4-1 and Section 3.6.1.3.3 to indicate that these instruments are not qualified for a harsh environment.

Valves V040A/B and V057A/B are pneumatic hydraulic valves that are normally open. The actuator consists of a piston/cylinder arrangement with pressurized hydraulic fluid underneath the piston and pressurized nitrogen above. The valve is maintained in a normally open position by the pressure of the hydraulic fluid. The nitrogen provides stored energy for closing. To close, redundant solenoids are energized which cause the high pressure hydraulic fluid to be dumped to a fluid reservoir. The valve will not close on loss of electrical power to the actuator since the solenoids are normally de-energized and closed. In addition, the hydraulic pressure is retained on loss of power to the hydraulic pumps. Motive power to the valves is specified as electrical power to the actuator. Therefore, the valves failure position is as is. The **FC** denotation on both sheets of Figure 10.3.2-1 is misleading. To avoid confusion, it is removed from both sheets of Figure 10.3.2-1. Also, an additional sentence has been added to item 12b of Table 2.2.4-1 to clarify the definition of motive power to valves V040A/B and V057A/B. Finally, Tier 2 Section 10.3.2.2.4 is modified to indicate that the valve closes on loss of hydraulic power.

# 3.0 REGULATORY IMPACT

The AP1000 FSER (Reference 2) in Subsection 3.6.1 discusses the locations and dynamic effects associated with postulated pipe rupture. The information provided in the present report is consistent with evaluation and procedures considered in the FSER.

The changes to the DCD presented in this report do not represent adverse changes to the design function or how design functions are performed or controlled. The changes to the DCD do not involve revising or replacing a DCD-described evaluation methodology nor involve a test or experiment not described in the DCD.

The changes described do not affect design features used to mitigate severe accidents. The as-designed location of the feedwater flow instruments or the main steam line pressure instruments do not alter design features used to mitigate severe accidents.

The subject changes will not alter barriers or alarms that control access to protected areas of the plant. The subject changes will not alter requirements for security personnel. Therefore, the proposed change does not have an adverse impact on the security assessment of the AP1000.

These changes do not impact the AP1000 Technical Specifications.

These changes represent a Tier 1 change and therefore require NRC approval.

# 4.0 REFERENCES

1. APP-GW-GL-700, "AP1000 Design Control Document", Revision 15

2. NUREG-1793, "September 2004, Final Safety Analysis Report Related to Certification of the AP1000 Standard Design"

3. APP-SGS-M3C-101, "SGS Instrumentation Requirements"

# 5.0 DCD MARKUP

| Table 2.2.4-1 (cont.) | | | | | | | | | |
|---|---|---|---|---|---|---|---|---|---|
| **Equipment Name** | **Tag No.** | **ASME Code Section III** | **Seismic Cat. I** | **Remotely Operated Valve** | **Class 1E/ Qual. for Harsh Envir.** | **Safety-Related Display** | **Control PMS** | **Active Function** | **Loss of Motive Power Position** |
| Steam Generator 2 Wide Range Level Sensor | SGS-018 | No | Yes | - | Yes/Yes | Yes | - | - | - |
| Main Steam Line Steam Generator 1 Pressure Sensor | SGS-030 | No | Yes | - | Yes/Yes | Yes | - | - | - |
| Main Steam Line Steam Generator 1 Pressure Sensor | SGS-031 | No | Yes | - | Yes/~~Yes~~ No | Yes | - | - | - |
| Main Steam Line Steam Generator 1 Pressure Sensor | SGS-032 | No | Yes | - | Yes/Yes | Yes | - | - | - |
| Main Steam Line Steam Generator 1 Pressure Sensor | SGS-033 | No | Yes | - | Yes/~~Yes~~ No | Yes | - | - | - |
| Main Steam Line Steam Generator 2 Pressure Sensor | SGS-034 | No | Yes | - | Yes/Yes | Yes | - | - | - |
| Main Steam Line Steam Generator 2 Pressure Sensor | SGS-035 | No | Yes | - | Yes/~~Yes~~ No | Yes | - | - | - |
| Main Steam Line Steam Generator 2 Pressure Sensor | SGS-036 | No | Yes | - | Yes/Yes | Yes | - | - | - |

**Table 2.2.4-1 (cont.)**

| Equipment Name | Tag No. | ASME Code Section III | Seismic Cat. I | Remotely Operated Valve | Class 1E/ Qual. for Harsh Envir. | Safety-Related Display | Control PMS | Active Function | Loss of Motive Power Position |
|---|---|---|---|---|---|---|---|---|---|
| Main Steam Line Steam Generator 2 Pressure Sensor | SGS-037 | No | Yes | - | Yes/~~Yes~~ No | Yes | - | - | - |
| Steam Generator 1 Startup Feedwater Flow Sensor | SGS-55A | No | Yes | - | Yes/~~Yes~~ No | Yes | - | - | - |
| Steam Generator 1 Startup Feedwater Flow Sensor | SGS-55B | No | Yes | - | Yes/~~Yes~~ No | Yes | - | - | - |
| Steam Generator 2 Startup Feedwater Flow Sensor | SGS-56A | No | Yes | - | Yes/~~Yes~~ No | Yes | - | - | - |
| Steam Generator 2 Startup Feedwater Flow Sensor | SGS-56B | No | Yes | - | Yes/~~Yes~~ No | Yes | - | - | - |

Note: Dash (-) indicates not applicable.

### *3.6.1.3.3 Specific Protection Considerations*

The analysis of the consequences of pipe breaks, through-wall cracks, and leakage cracks uses the following criteria.

- High-energy containment penetrations are subject to special protection mechanisms. Restraints are provided to maintain the operability of the isolation valves and the integrity of the penetration due to a break in the safety-related and nonsafety piping beyond the restraint if required. These restraints are located as close as practicable to the containment isolation valves associated with these penetrations.

- ~~Instrumentation required to function following a pipe rupture is protected. In the event of a high-energy line break outside containment, the only safety-related instrumentation that could be affected is the pressure and flow instrumentation in the main steam isolation valve (MSIV) compartment. This instrumentation is qualified for the environmental conditions resulting from a 1-square-foot break from either main steam or feedwater line in the MSIV compartment as required in order to perform its safety functions.~~

| Table 2.2.4-4 (cont.)<br>Inspections, Tests, Analyses, and Acceptance Criteria | | |
|---|---|---|
| **Design Commitment** | **Inspections, Tests, Analyses** | **Acceptance Criteria** |
| 12.a) The motor-operated valves identified in Table 2.2.4-1 perform an active safety-related function to change position as indicated in the table. | i) Tests or type tests of motor-operated valves will be performed to demonstrate the capability of the valve to operate under its design conditions.<br><br>ii) Inspection will be performed for the existence of a report verifying that the as-installed motor-operated valves are bounded by the tests or type tests.<br><br>iii) Tests of the as-installed motor-operated valves will be performed under pre-operational flow, differential pressure, and temperature conditions. | i) A test report exists and concludes that each motor-operated valve changes position as indicated in Table 2.2.4-1 under design conditions.<br><br>ii) A report exists and concludes that the as-installed motor-operated valves are bounded by the tests or type tests.<br><br>iii) Each motor-operated valve changes position as indicated in Table 2.2.4-1 under pre-operational test conditions. |
| 12.b) After loss of motive power, the remotely operated valves identified in Table 2.2.4-1 assume the indicated loss of motive power position. | Testing of the installed valves will be performed under the conditions of loss of motive power. | After loss of motive power, each remotely operated valve identified in Table 2.2.4-1 assumes the indicated loss of motive power position. *Motive power to SGS-V040A/B and SGS-V057A/B is electric power to the actuator from plant services.* |

### *10.3.2.2.4 Main Steam Isolation Valves*

The function of the main steam isolation is to limit blowdown to one steam generator in the event of a steam line break to:

- Limit the effect upon the reactor core to within specified fuel design limits
- Limit containment pressure to a value less than design pressure

Main steam isolation consists of one quick-acting gate valve in each main steam line and one associated globe main steam isolation bypass valve with associated actuators and instrumentation. These valves are located outside the containment, downstream of the steam generator safety valves

and the atmospheric relief valve, in the auxiliary building. The isolation valves provide positive shutoff with minimum leakage during postulated line severance conditions either upstream or downstream of the valves.

The main steam isolation valves close fully upon receipt of a manual or automatic signal and remain fully closed. Upon receipt of the closing signal, the main steam isolation valves complete the closing cycle despite loss of normally required utility services for actuator and/or instrumentation. On loss of actuating ~~gas~~-hydraulic power, the valves fail to the closed position. *On loss of electrical power, the valves remain in their current position.* Position indication and remote manual operation of the isolation valves are provided in the control room and remote shutdown workstation. Additionally, provisions are made for in-service inspection of the isolation valves.

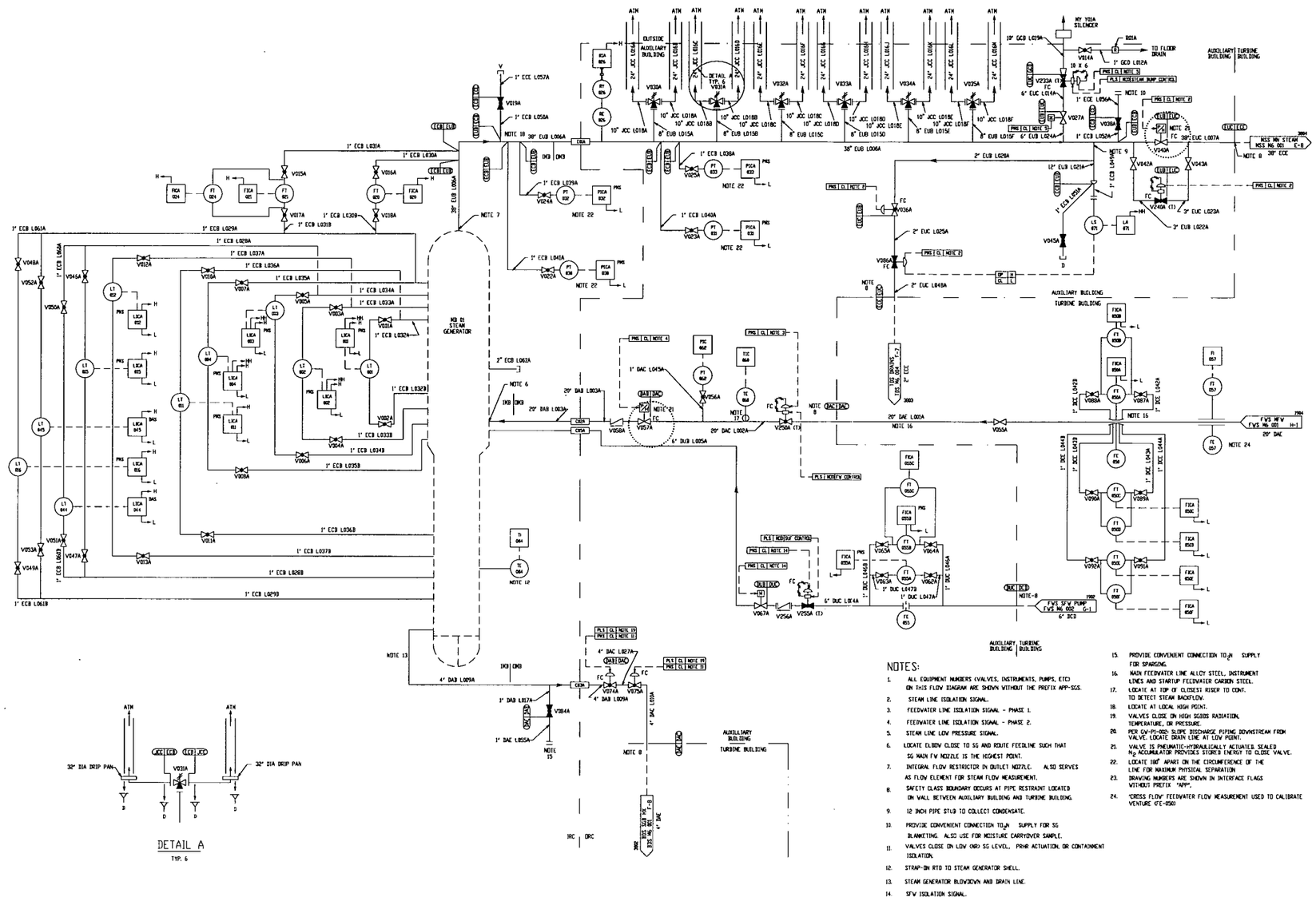


**DCD Figure 10.3.2-1 (Sheet 1 of 2) –** The FCs that are encircled are striken from the figure.

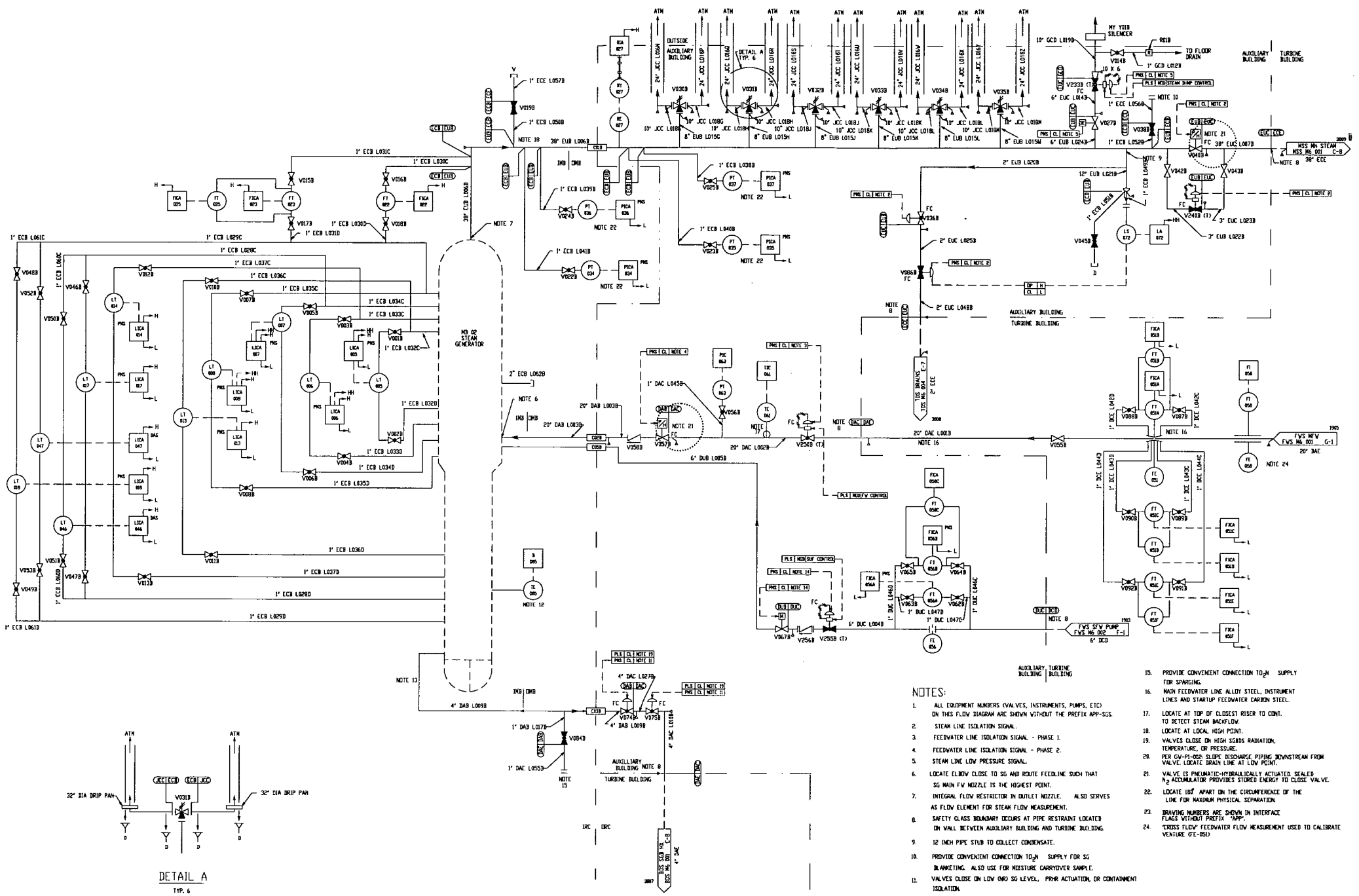


**DCD Figure 10.3.2-1 (Sheet 2 of 2)** - The FCs that are encircled are striken from the figure.