Attachment 3
to ULNRC-05416

AREVA Calculation

Callaway CRDM Hypothetical Flaw Evaluations

AREVA NP Document No. 32-9046889-002

NON-PROPRIETARY VERSION

AREVA

CALCULATION SUMMARY SHEET (CSS)

Document Identifier 32-9046889-002

Title CALLAWAY CRDM HYPOTHETICAL FLAW EVALUATIONS

PREPARED BY:		REVIEWED BY: METHOD: ☒ DETAILED CHECK ☐ INDEPENDENT CALCULATION	
NAME	H. P. GUNAWARDANE	NAME	A. D. NANA
SIGNATURE		SIGNATURE	
TITLE	ENGINEER IV	TITLE	ADVISORY ENGINEER
DATE	4/25/07	DATE	4/25/07
COST CENTER	41314	REF. PAGE(S)	60
TM STATEMENT: REVIEWER INDEPENDENCE	B.D		
NAME	B. DJAZMATI		

PURPOSE AND SUMMARY OF RESULTS:

This document is a non-propietary version of AREVA NP Document Number 32-9045288-002. The proprietary information removed from 32-9045288-002 is indicated by a pair of square brackets "[ ]". The geometry and operating conditions are AmerenUE Proprietary and the detailed through-wall stresses are Dominion Engineering, Inc. Proprietary.

The CRDM nozzles at Callaway will be undergoing Ultrasonic Testing (UT) inspections during the Spring of 2007. RVCH nozzle penetrations 74 through 78 have an area that is not inspectable. This fracture mechanics analysis is being performed in order to support the potential for not obtaining full 360° UT coverage in certain localized regions of the CRDM below the attachment weld. The purpose of this analysis is to determine the maximum allowable beginning-of-life (BOL) through-wall flaw size, at each of the postulated flaw regions, which would not reach critical flaw size conservatively considering a two-year service period.

This analysis addresses the effects of the as-designed and the as-built weld configurations. For this purpose, three types of outermost nozzle configurations (49° penetration angle) were analyzed by Dominion Engineering, Inc. (DEI). They are referred to as cases 49A, 49B, and 49C. A hypothetical circumferential through-wall flaw and an axial through-wall flaw were evaluated in each of the three types of nozzles. These postulated flaws were located at or just below the attachment weld.

The purpose of Revision 001 is to update the calculation for a period of seven years between inspections.

The purpose of Revision 002 is to incorporate minor editorial customer comments.

The results of the flaw evaluation are summarized in Section 5.0.

THE FOLLOWING COMPUTER CODES HAVE BEEN USED IN THIS DOCUMENT:

CODE/VERSION/REV	CODE/VERSION/REV

THE DOCUMENT CONTAINS ASSUMPTIONS THAT MUST BE VERIFIED PRIOR TO USE ON SAFETY-RELATED WORK

☐ YES

☒ NO

Record of Revisions

Revision	Date	Pages/Sections Changed	Brief Description
000	03/07	All	Original Release
001	04/07	All	Updated calculations for period of seven year between inspections
002	04/07	All	Incorporated minor editorial customer comments (corrected flaw numbers in List of Tables)

Table of Contents

LIST OF TABLES

LIST OF FIGURES

1.0 PURPOSE

The CRDM nozzles at Callaway (CA) will be undergoing Ultrasonic Testing (UT) inspections during the Spring of 2007. Reactor vessel closure head (RVCH) nozzle penetrations 74 through 78 have an area that is not inspectable. This fracture mechanics analysis is being performed in order to support the potential for not obtaining full 360° UT coverage in certain localized regions of the CRDM below the attachment weld. The purpose of this analysis is to determine the maximum allowable beginning-of-life (BOL) through-wall flaw size, at each of the postulated flaw regions, which would not reach critical flaw size conservatively considering a period of seven years between inspections.

2.0 ANALYTICAL METHODOLOGY

The localized regions within the CRDM nozzle that may not receive full 360^0 coverage are in the portions of the nozzle at or just below the bottom elevation of the J-groove weld. This evaluation will consider the stresses from each of three Dominion Engineering, Inc. (DEI) finite element analysis models that were performed in support of this analysis (Reference 1). Each of these models represents different heights from the bottom of the nozzle to the bottom of the weld corresponding to the downhill side of the nozzle.

The allowable BOL flaw size for a given service period will be determined, through an iterative analysis, by considering flaw growth in a PWR environment due to PWSCC, and comparing against the allowable end-of-life (EOL) flaw size, for hypothetical axial through-wall flaws or edge cracks postulated at the bottom of the CRDM nozzles as well as hypothetical circumferential through-wall flaws below the weld. The fatigue crack growth will not be accounted for in this analysis because previous experience with similar geometries and loading has shown that fatigue crack growth is approximately three orders of magnitude less than PWSCC.

The maximum allowable EOL flaw size is based on the current NRC accepted flaw evaluation criteria, in Alloy 600 reactor vessel head partial penetration nozzles. Stresses that contribute to PWSCC are the long term steady state stresses due to shrinkage of the partial penetration attachment weld (residual stresses) and steady state pressure and thermal loads.

The following postulated through-wall flaws in the Alloy 600 CRDM nozzles are evaluated in the present analysis.

1) Circumferential flaw located at or just below the bottom elevation of the J-groove weld in the outermost CRDM nozzle (48.7 degree penetration angle) for each of the three DEI stress models, referred to as 49A, 49B, and 49C.

2) Edge crack located at the bottom of the outermost CRDM nozzle (48.7 degree penetration angle) for each of the three DEI stress models, noted above.

The above hypothetical flaws are evaluated as flaw #1a through #1c, and flaw #2a through #2c, respectively, where the flaw ID numbers "a" through "c" are defined in Section 4.2.

3.0 KEY ASSUMPTIONS

There are no major assumptions in this document that require verification. Minor assumptions are noted where applicable.

4.0 CALCULATIONS

4.1 Geometry and Flaw Model

The nozzle is described by its basic diameters. Circumferential through-wall flaws are modeled as through cracks in an infinite body subjected to arbitrary loading. Axial through-wall cracks are modeled as a continuous surface crack in a semi-infinite body under an arbitrary stress profile.

4.2 Nozzle Dimensions

The cylindrical CRDM nozzle is dimensioned as follows to be in agreement with the Dominion Engineering residual stress analysis (see Section 4.6). These dimensions are based on Reference 2.

Basic Parameters

Outside diameter, D_o = [ ]

Inside diameter, D_i = [ ]

Derived dimensions are:

Outside radius, R_o = [ ]

Inside radius, R_i = [ ]

Thickness, t = [ ]

Mean radius, R = [ ]

Height of the nozzles below the weld* in DEI Finite Element Models (FEMs):

Flaw ID	DEI FEM # (Ref. 1)	Height of Nozzle (Ref. 1)
a	49A	[ ]
b	49B	[ ]
c	49C	[ ]

* Corresponding to the downhill side of the nozzle

4.3 Postulated Flaw Shapes

The crack is modeled as a through-wall crack in an infinite body and subjected to an arbitrary stress profile. A circumferential through-wall flaw is shown below. The length of the crack, *2a*, is $2\theta R$ (or flaw length, a, is θR).

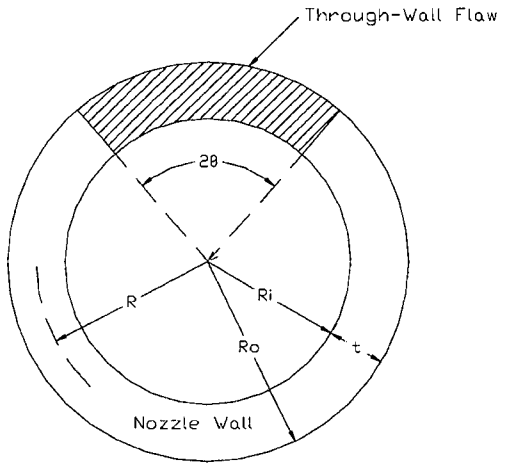

An edge crack (axially oriented through-wall flaw with respect to the nozzle axis) with flaw size, a, is modeled as a continuous surface crack in a semi-infinite body and subjected to arbitrary loading as depicted below. The location x = 0 corresponds to the bottom of the nozzle.

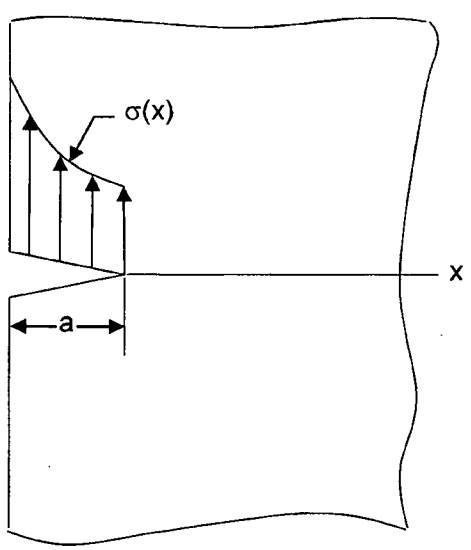

4.4 Material Properties

The Callaway CRDM nozzles are made from Alloy 600 material to ASME specification SB-167 for tubular products (Reference 3).

A value nozzle yield strength value of 45.0 ksi at room temperature is assumed (Reference 1). The yield strength at a normal operating temperature of [ ] (Reference 1, 8) is obtained by multiplying the room temperature value by the ratio of the ASME Code minimum values at 70°F and [ ], as shown below.

Condition	Temperature (°F)	Yield Strength, S_y (ksi)	
		ASME Code (Ref 4.)	Callaway
Room Temperature	70	35.0	45.0
Normal Operating	[ ]	[ ]	[ ]

4.5 Primary Water Stress Corrosion Cracking (PWSCC)

Flaw growth due to primary water stress corrosion cracking (PWSCC) is calculated using the NRC flaw evaluation guideline (Reference 5, 6) for dispositioning flaws in reactor vessel head penetration base metal material (Alloy 600). This model provides a reference crack growth rate at 325°C (617°F) and uses an activation energy of 31,000 calories/mole to account for differences in temperature.

Using a temperature correction factor (C_o) that reduces to unity at 325°C, the stress corrosion crack (SCC) growth equation is:

Metric units: $da/dt = C_o(2.67 \times 10^{-12})(K_I - 9)^{1.16}$ m/sec

where K_I is the applied stress intensity factor in MPa√m, or

English units: $da/dt = C_o(1.17 \times 10^{-10})(K_I - 8.19)^{1.16}$ in/sec

or, $da/dt = C_o(3.69 \times 10^{-3})(K_I - 8.19)^{1.16}$ in/yr

where K_I is the applied stress intensity factor in ksi√in.

The temperature correction coefficient, C_o, is defined as

$$C_o = e^{-\frac{Q}{R}\left(\frac{1}{T} - \frac{1}{T_{ref}}\right)}$$

where Q = 130 kJ/mole = 31,000 calories/mole
R = 8.314 x 10^{-3} kJ/mole-°K = 1.987 calories/mole-°K

and T = Operating temperature in degrees Kelvin
T_{ref} = Reference temperature in degrees Kelvin

The C_o term is tabulated below as a function of temperature, based on:

T_{ref} = 325.0 °C
= 617.0 °F
= 598.2 °K,

T (°F)	T (°C)	T (°K)	C_o
617.0	325.0	598.2	1.0000
[ ]	[ ]	[ ]	[ ]

It is noted that the crack growth equation given above includes an explicit threshold for stress intensity factor (9 MPa√m or 8.19 ksi√in) below which crack propagation will not occur.

4.6 Stress Intensity Factor (SIF) Solutions

Two types of flaw are considered in the present flaw evaluations, circumferential through-wall flaws and an edge crack located at the bottom of the nozzle. The stress intensity factor solutions used to analyze these flaws are discussed in this section.

4.6.1 Circumferential Through-Wall Flaws

The circumferential through-wall flaw SIF solution, derived in Reference 7, is utilized in this analysis. The solution is for a through-wall crack in an infinite body subjected to a stress profile symmetric with respect to the middle of the crack as shown below.

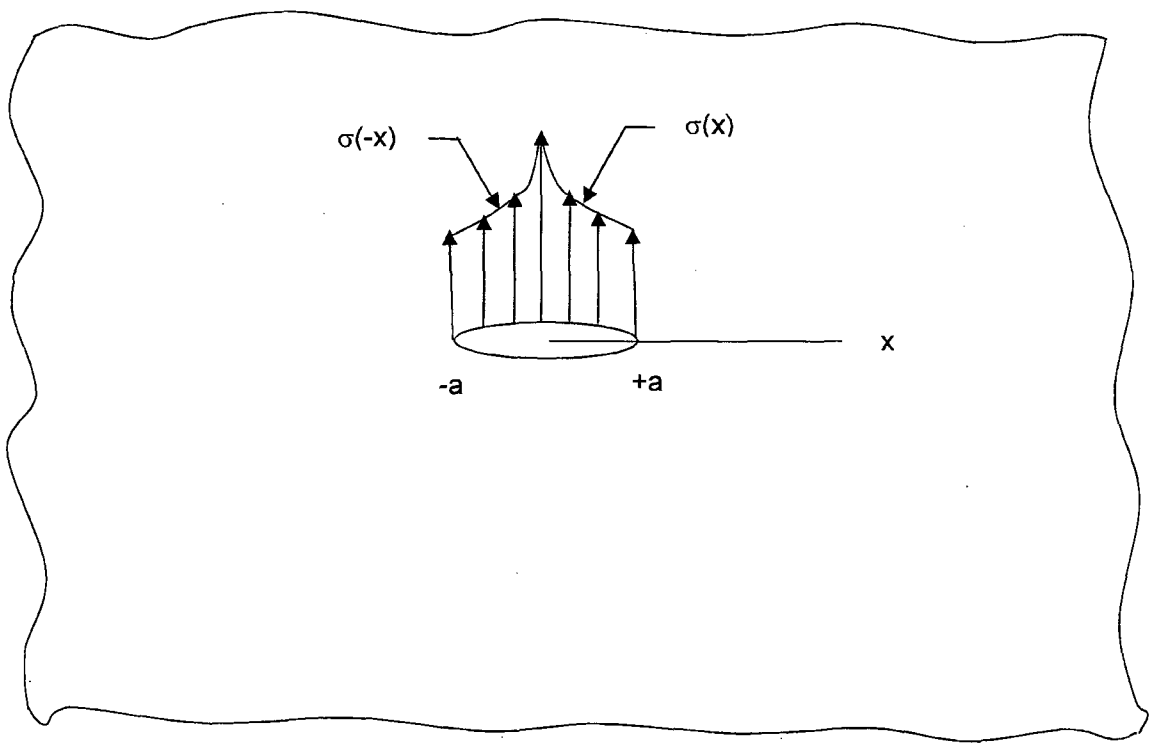

where, a = flaw length

l = 2a = crack length

Stress intensity factors are determined at the crack tip, using cubic polynomials to characterize through-wall stress profiles. The SIF solution is described below.

$$K_I = \sqrt{\pi a}\left[\left(A_0 + A_p\right) + A_1\left(\frac{2a}{\pi}\right) + A_2\left(\frac{a^2}{2}\right) + A_3\left(\frac{4a^3}{3\pi}\right)\right]$$

The above SIF solution characterizes the distribution of stress through the wall as a third-order polynomial up to the depth of the flaw,

$$\sigma = A_o + A_1 x + A_2 x^2 + A_3 x^3,$$

where, x = distance from the middle of the crack
A_0, A_1, A_2, and A_3 = coefficients of the polynomial expression representing the stress profile in the uncracked section

The normal operating steady state condition pressure value of 2.332 ksi is considered as the crack face pressure, A_p which is subsequently added to the constant A_0 stress term.

4.6.2 Edge Crack

The SIF solution for an edge crack under an arbitrary stress profile, also derived in Reference 7, is utilized in this analysis. In that Reference, the solution is referred to as a continuous surface crack in a semi-infinite body. The edge crack is schematically illustrated in Section 4.3. In this analysis the edge crack is postulated at the bottom of the nozzle.

The stress intensity factor for such a flaw is given by

$$K_I = 1.12\sqrt{\pi a}\left[(A_0 + A_p) + A_1\left(\frac{2a}{\pi}\right) + A_2\left(\frac{a^2}{2}\right) + A_3\left(\frac{4a^3}{3\pi}\right)\right]$$

This solution is essentially identical to the circumferential through-wall solution given in Section 4.6.1 with the exception of a multiplication factor of 1.12 on the SIF solution. This factor accounts for free surface effects. As stated in Reference 7, this factor strictly applies only to the uniform component of the stress profile, A_0. However, in this solution, it is being conservatively applied to all the components of the stress profile. The through-wall stress distribution is as defined in Section 4.6.1 where x is the distance from the bottom of the nozzle.

4.7 Applied Stresses

The maximum sustained steady state stresses needed to predict crack growth by stress corrosion cracking in a primary water environment are obtained from an elastic-plastic three-dimensional finite element analysis (Reference 1) performed by Dominion Engineering, Inc. (DEI). Figure 1 presents a sketch of the finite element model of nozzle which includes a single nozzle, the partial penetration attachment weld, the weld buttering, and a portion of the reactor vessel head, with cladding. The finite element node numbering scheme, which is utilized to report stresses, is described in Figure 1.

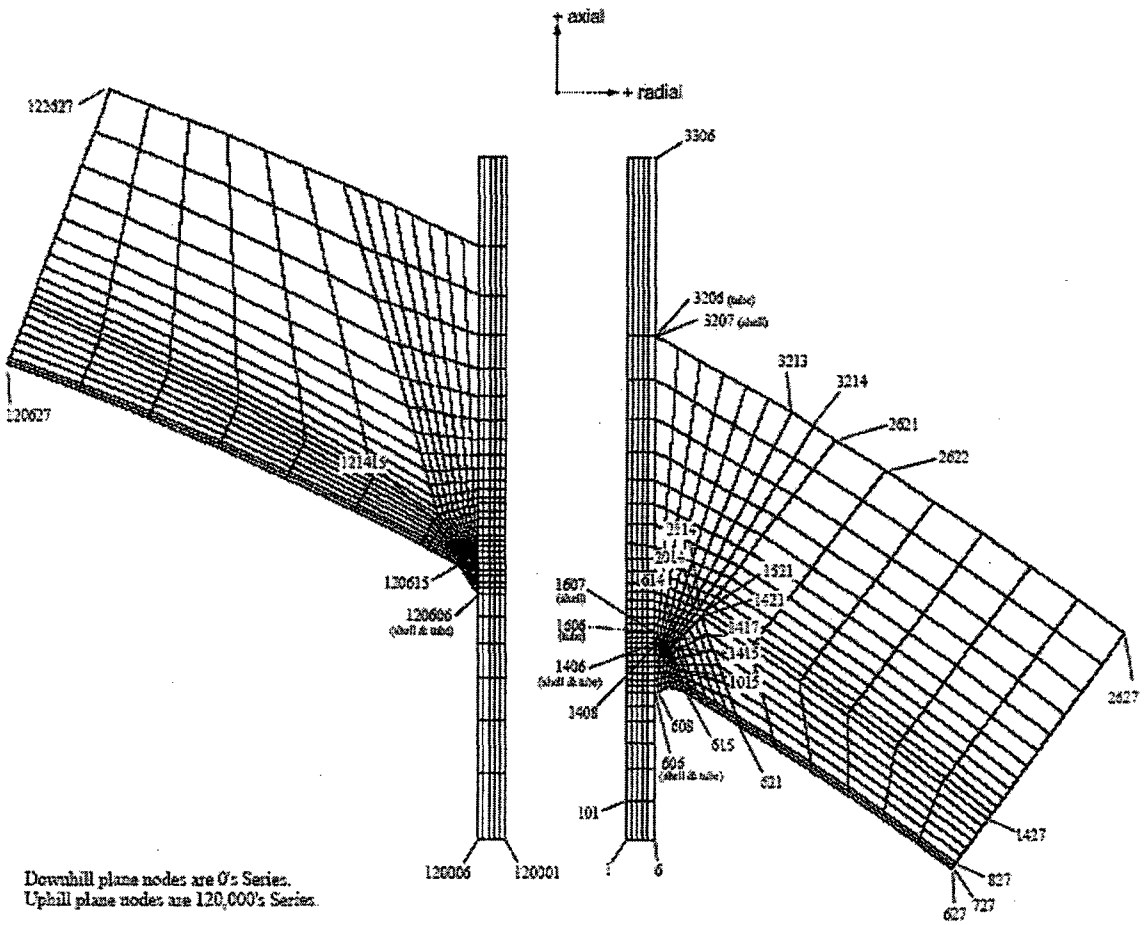

Downhill plane nodes are 0's Series.
Uphill plane nodes are 120,000's Series.

Tube Node Series: 1's at nozzle ID, 6's at nozzle OD
Shell Node Series: 6's at shell ID (merged w/tube OD) in weld region
7's at penetration ID above weld region
27's at edge of shell section

Node numbers in nozzle increase by 100 up the length of the nozzle.
Node numbers in shell are as indicated by the figure

Figure 1. CRDM Penetration Node Numbering Scheme in DEI FEA Model (Ref. 1)

It should be noted that the fatigue crack growth will not be accounted for in this analysis because previous experience with similar geometries and loading has shown that fatigue crack growth is three orders of magnitude less than PWSCC.

DEI provided FE stresses for nozzle 49A. Nozzle "49A" (48.7° penetration angle) represents the "as-designed" height of approximately [ ] below the bottom of the weld on the downhill side as illustrated in Figure 2.

In addition, DEI provided FE stresses for nozzles 49B and 49C which represent the "as-built" cases shown in Figure 3. Each of these nozzles represents different heights of the nozzle from the bottom of the attachment weld to the bottom of the nozzle as described in Section 4.2. The applied stresses for nozzles 49A, 49B, and 49C, are given in Sections 4.7.1, 4.7.2, and 4.7.3, respectively.

The DEI analysis simulated the heatup of the weld, butter, and adjacent material during the welding process and the subsequent cooldown to ambient temperature, a pre-service hydro test, and operation at steady state pressure and temperature conditions. The final stress is strongly dependent on the yield strength of the nozzle. A nozzle yield strength value of 45.0 ksi was used by DEI.

The normal operating pressure is [ ] (Reference 1, 8). Although the effects of this pressure load are included in the steady state stresses reported in Tables 1 through 15, an additional load will be considered in the flaw evaluations by applying this pressure to the crack face.

Time dependent stress corrosion crack growth is calculated in half yearly increments.

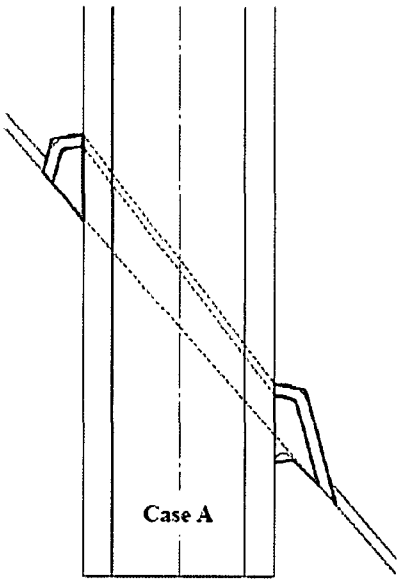

Figure 2. Geometry of 48.7° Penetration, As Designed (FEA Model Weld Geometry in Red) (Ref 1)

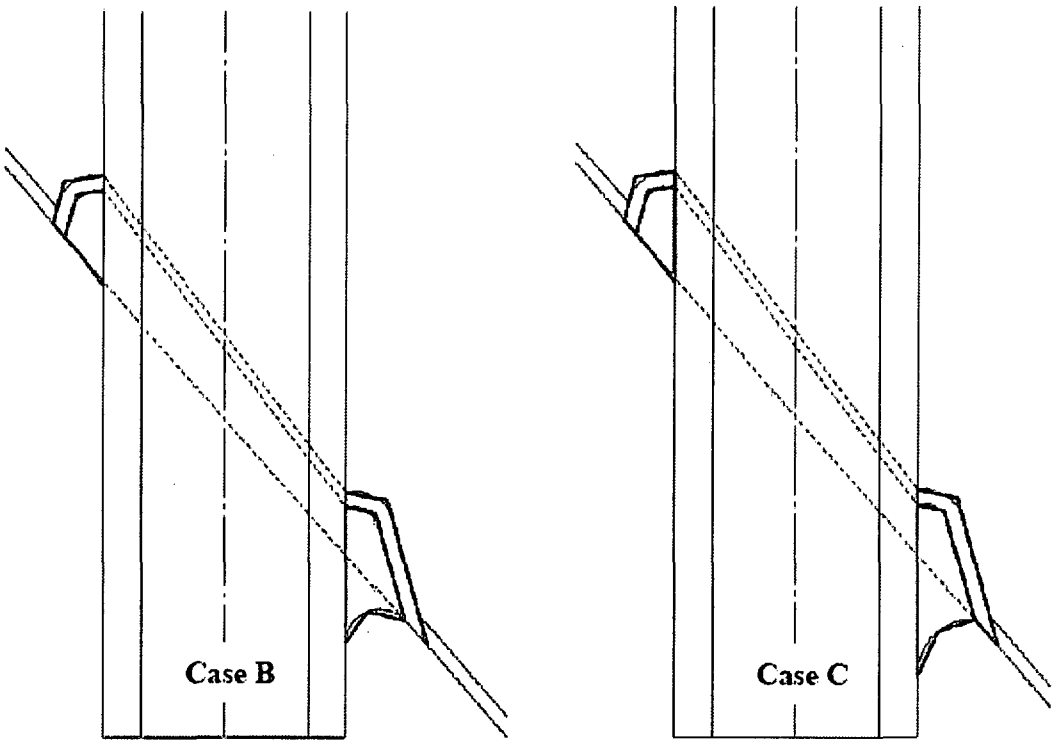

Figure 3. Geometry of 48.7° Penetration, As Built Assumptions (FEA Model Weld Geometry in Red) (Ref 1)

4.7.1 Applied Stresses for Nozzle 49A

Steady state axial and hoop stresses, on the downhill and the uphill sides of nozzle 49A are summarized in Tables 1 through 4 for the 48.7° penetration angle nozzle analyzed by DEI, as listed below. Stresses are provided for each node on the downhill and uphill sides of the nozzle, referenced to the inside surface nodal locations.

	DEI Analysis Case			Stress Summary Tables	
	Nozzle Angle*	Yield Strength	Type	Downhill Side	Uphill Side
Outermost nozzle	48.7°	45.0 ksi	Axial	1	2
Outermost nozzle	48.7°	45.0 ksi	Hoop	3	4

* Relative to the center of the head.

The axial stresses from the DEI analysis, reported every 15 degrees in the circumferential direction from 0-degrees (downhill side) to 180-degrees (uphill side), are also summarized. The stresses are summarized for the bottom of the weld locations in Table 5.

The steady state stresses are reviewed to determine which region from the downhill to the uphill location is the most highly stressed location. From Table 5, the maximum axial stress for the bottom of the weld location occurs at the uphill side. From review of Tables 3 and 4, it is clear that the maximum hoop stress below the weld occurs at the uphill side.

Table 1. Steady State Axial Stresses in 49° CRDM Nozzle "A" on Downhill Side

Plant:	Callaway	BON = Bottom of Nozzle
Source:	DEI [1]	BOW = Bottom of Weld
Penetration Angle:	48.7 Degrees	TOW = Top of Weld
Shrink Fit:	None	TOH = Top of Head
Nozzle Yield:	45.0 ksi	TON = Top of Nozzle

Inside Surface Node	Elevation	Wall Thickness		Residual Plus Operating Stresses (Time 110004) Through-Wall Position Inside	1/5T	2/5T	3/5T	4/5T	Outside	Average Value	Distance from Bottom of Nozzle
1			BON							-1488	
101										-332	
201										2196	
301										4672	
401										6406	
501										7221	
601			BOW							2004	
701										-5710	
801										-13265	
901										-14292	
1001										-10535	
1101										-4546	
1201										2111	
1301										7624	
1401			TOW							12909	
1501										20895	
1601										18528	
1701										16319	
1801										15206	
1901										13429	
2001										11468	
2101										9107	
2201										6811	
2301										5086	
2401										3889	
2501										3120	
2601										2515	
2701										1359	
2801										481	
2901										1947	
3001										1817	
3101										2332	
3201			TOH							2372	
3301			TON							2243	

Table 2. Steady State Axial Stresses in 49° CRDM Nozzle "A" on Uphill Side

Plant: Callaway
Source: DEI [1]
Penetration Angle: 48.7 Degrees
Shrink Fit: None
Nozzle Yield: 45.0 ksi

BON = Bottom of Nozzle
BOW = Bottom of Weld
TOW = Top of Weld
TOH = Top of Head
TON = Top of Nozzle

Inside Surface Node	Elevation	Wall Thickness		Residual Plus Operating Stresses (Time 110004) Through-Wall Position: Inside	1/5T	2/5T	3/5T	4/5T	Outside	Average Value	Distance from Bottom of Nozzle
120001			BON							-379	
120101										2193	
120201										7795	
120301										15281	
120401										23730	
120501										31845	
120601			BOW							32498	
120701										29938	
120801										24029	
120901										21575	
121001										17833	
121101										16163	
121201										15199	
121301										12801	
121401			TOW							10503	
121501										2421	
121601										4094	
121701										3789	
121801										3269	
121901										2220	
122001										1691	
122101										1430	
122201										1321	
122301										1349	
122401										1496	
122501										1727	
122601										1981	
122701										2200	
122801										2333	
122901										2365	
123001										2315	
123101										2224	
123201			TOH							2141	
123301			TON							2106	

Table 3. Steady State Hoop Stresses in 49° CRDM Nozzle "A" on Downhill Side

Plant:	Callaway	BON = Bottom of Nozzle
Source:	DEI [1]	BOW = Bottom of Weld
Penetration Angle:	48.7 Degrees	TOW = Top of Weld
Shrink Fit:	None	TOH = Top of Head
Nozzle Yield:	45.0 ksi	TON = Top of Nozzle

Inside Surface Node	Elevation	Wall Thickness		Residual Plus Operating Stresses (Time 110004) Through-Wall Position Inside	1/5T	2/5T	3/5T	4/5T	Outside	Average Value	Distance from Bottom of Nozzle
1			BON							-379	
101										2193	
201										7795	
301										15281	
401										23730	
501										31845	
601			BOW							32498	
701										29938	
801										24029	
901										21575	
1001										17833	
1101										16163	
1201										15199	
1301										12801	
1401			TOW							10503	
1501										2421	
1601										4094	
1701										3789	
1801										3269	
1901										2220	
2001										1691	
2101										1430	
2201										1321	
2301										1349	
2401										1496	
2501										1727	
2601										1981	
2701										2200	
2801										2333	
2901										2365	
3001										2315	
3101										2224	
3201			TOH							2141	
3301			TON							2106	

Table 4. Steady State Hoop Stresses in 49° CRDM Nozzle "A" on Uphill Side

Plant:	Callaway	BON = Bottom of Nozzle
Source:	DEI [1]	BOW = Bottom of Weld
Penetration Angle:	48.7 Degrees	TOW = Top of Weld
Shrink Fit:	None	TOH = Top of Head
Nozzle Yield:	45.0 ksi	TON = Top of Nozzle

Inside Surface Node	Elevation	Wall Thickness		Residual Plus Operating Stresses (Time 110004) Through-Wall Position Inside	1/5T	2/5T	3/5T	4/5T	Outside	Average Value	Distance from Bottom of Nozzle
120001			BON							-5639	
120101										-5987	
120201										-1319	
120301										6503	
120401										14771	
120501										31030	
120601			BOW							42431	
120701										53899	
120801										54046	
120901										55388	
121001										54716	
121101										53388	
121201										50314	
121301										46224	
121401			TOW							39206	
121501										29292	
121601										19387	
121701										8120	
121801										4786	
121901										1836	
122001										1382	
122101										1945	
122201										2736	
122301										3574	
122401										4399	
122501										5037	
122601										5385	
122701										5434	
122801										5296	
122901										5133	
123001										5044	
123101										5030	
123201			TOH							5055	
123301			TON							5064	

Table 5. Axial Stresses Along the Circumference at the Bottom of the Weld in 49 deg. Nozzle "A"
Source: DEI [1]

Location-->	**Downhill 0 deg.**	**15 deg.**	**30 deg.**	**45 deg.**	**60 deg.**	**75 deg.**	**90 deg.**	**105 deg.**	**120 deg.**	**135 deg.**	**150 deg.**	**165 deg.**	**Uphill 180 deg.**
Nodes -->	601	10601	20601	30601	40601	50601	60601	70601	80601	90601	100601	110601	120601
Thru Node	606	10606	20606	30606	40606	50606	60606	70606	80606	90606	100606	110606	120606
Thru-Wall	**Stresses (at time = 110004.) in psi.**												
Inside													
1/5T													
2/5T													
3/5T													
4/5T													
Outside													
Average =	2004	-480	-2241	-1270	1413	4195	7544	12140	17650	22616	27375	31362	32498

4.7.2 Applied Stresses for Nozzle 49B

Steady state axial and hoop stresses, on the downhill and the uphill sides of nozzle 49B are summarized in Tables 6 through 9 for the 48.7° penetration angle nozzle analyzed by DEI, as listed below. Stresses are provided for each node on the downhill and uphill sides of the nozzle, referenced to the inside surface nodal locations.

	DEI Analysis Case			Stress Summary Tables	
	Nozzle Angle*	Yield Strength	Type	Downhill Side	Uphill Side
Outermost nozzle	48.7°	45.0 ksi	Axial	6	7
Outermost nozzle	48.7°	45.0 ksi	Hoop	8	9

* Relative to the center of the head.

The axial stresses from the DEI analysis, reported every 15 degrees in the circumferential direction from 0-degrees (downhill side) to 180-degrees (uphill side), are also summarized. The stresses are summarized for the bottom of the weld locations in Table 10.

The steady state stresses are reviewed to determine which region from the downhill to the uphill location is the most highly stressed location. From Table 10, the maximum axial stress for the bottom of the weld location occurs at 15° from the uphill side. From review of Tables 8 and 9, it is clear that the maximum hoop stress below the weld occurs at the uphill side.

Table 6. Steady State Axial Stresses in 49° CRDM Nozzle "B" on Downhill Side

Plant:	Callaway	BON = Bottom of Nozzle
Source:	DEI [1]	BOW = Bottom of Weld
Penetration Angle:	48.7 Degrees	TOW = Top of Weld
Shrink Fit:	None	TOH = Top of Head
Nozzle Yield:	45.0 ksi	TON = Top of Nozzle

Inside Surface Node	Elevation	Wall Thickness		Residual Plus Operating Stresses (Time 110004) Through-Wall Position Inside	1/5T	2/5T	3/5T	4/5T	Outside	Average Value	Distance from Bottom of Nozzle
1			BON							-1512	
101										-146	
201										2648	
301										6064	
401										9193	
501										11745	
601			BOW							11375	
701										9153	
801										-5905	
901										-19806	
1001										-25063	
1101										-18575	
1201										-9942	
1301										-219	
1401			TOW							7191	
1501										16798	
1601										14401	
1701										12482	
1801										11698	
1901										10276	
2001										8659	
2101										6572	
2201										4794	
2301										3473	
2401										2721	
2501										2295	
2601										2003	
2701										1268	
2801										634	
2901										2021	
3001										1919	
3101										2342	
3201			TOH							2346	
3301			TON							2228	

Table 7. Steady State Axial Stresses in 49° CRDM Nozzle "B" on Uphill Side

Plant:	Callaway	BON = Bottom of Nozzle
Source:	DEI [1]	BOW = Bottom of Weld
Penetration Angle:	48.7 Degrees	TOW = Top of Weld
Shrink Fit:	None	TOH = Top of Head
Nozzle Yield:	45.0 ksi	TON = Top of Nozzle

Inside Surface Node	Elevation	Wall Thickness		Residual Plus Operating Stresses (Time 110004) Through-Wall Position Inside	1/5T	2/5T	3/5T	4/5T	Outside	Average Value	Distance from Bottom of Nozzle
120001			BON							396	
120101										4201	
120201										11658	
120301										20136	
120401										27782	
120501										34250	
120601			BOW							33871	
120701										32299	
120801										26702	
120901										24202	
121001										20459	
121101										18520	
121201										17303	
121301										14090	
121401			TOW							11219	
121501										2807	
121601										4524	
121701										4068	
121801										3645	
121901										2584	
122001										1943	
122101										1617	
122201										1446	
122301										1441	
122401										1566	
122501										1778	
122601										2011	
122701										2209	
122801										2324	
122901										2345	
123001										2293	
123101										2209	
123201			TOH							2135	
123301			TON							2103	

Table 8. Steady State Hoop Stresses in 49° CRDM Nozzle "B" on Downhill Side

Plant:	Callaway	BON = Bottom of Nozzle
Source:	DEI [1]	BOW = Bottom of Weld
Penetration Angle:	48.7 Degrees	TOW = Top of Weld
Shrink Fit:	None	TOH = Top of Head
Nozzle Yield:	45.0 ksi	TON = Top of Nozzle

Inside Surface Node	Elevation	Wall Thickness		Residual Plus Operating Stresses (Time 110004) Through-Wall Position Inside	1/5T	2/5T	3/5T	4/5T	Outside	Average Value	Distance from Bottom of Nozzle
1			BON							-18683	
101										-11138	
201										-4834	
301										-323	
401										1555	
501										6837	
601			BOW							16711	
701										33915	
801										37139	
901										31364	
1001										22604	
1101										23323	
1201										28739	
1301										32570	
1401			TOW							35549	
1501										41133	
1601										37344	
1701										30186	
1801										26274	
1901										23512	
2001										20224	
2101										16120	
2201										12130	
2301										9035	
2401										6650	
2501										4908	
2601										3289	
2701										2967	
2801										-197	
2901										3970	
3001										5522	
3101										5495	
3201			TOH							5009	
3301			TON							4986	

Table 9. Steady State Hoop Stresses in 49° CRDM Nozzle "B" on Uphill Side

Plant:	Callaway	BON = Bottom of Nozzle
Source:	DEI [1]	BOW = Bottom of Weld
Penetration Angle:	48.7 Degrees	TOW = Top of Weld
Shrink Fit:	None	TOH = Top of Head
Nozzle Yield:	45.0 ksi	TON = Top of Nozzle

Inside Surface Node	Elevation	Wall Thickness		Residual Plus Operating Stresses (Time 110004) Through-Wall Position Inside	1/5T	2/5T	3/5T	4/5T	Outside	Average Value	Distance from Bottom of Nozzle
120001			BON							-9500	
120101										-4235	
120201										785	
120301										8560	
120401										15976	
120501										32476	
120601			BOW							43430	
120701										55274	
120801										55388	
120901										56176	
121001										55469	
121101										53734	
121201										50899	
121301										46108	
121401			TOW							38258	
121501										28888	
121601										19160	
121701										8078	
121801										4587	
121901										1227	
122001										675	
122101										1407	
122201										2368	
122301										3352	
122401										4277	
122501										4977	
122601										5351	
122701										5408	
122801										5275	
122901										5119	
123001										5038	
123101										5029	
123201			TOH							5056	
123301			TON							5068	

Table 10. Axial Stresses Along the Circumference at the Bottom of the Weld in 49 deg. Nozzle "B"
Source: DEI [1]

Location-->	**Downhill 0 deg.**	**15 deg.**	**30 deg.**	**45 deg.**	**60 deg.**	**75 deg.**	**90 deg.**	**105 deg.**	**120 deg.**	**135 deg.**	**150 deg.**	**165 deg.**	**Uphill 180 deg.**
Nodes -->	601	10601	20601	30601	40601	50601	60601	70601	80601	90601	100601	110601	120601
Thru Node	606	10606	20606	30606	40606	50606	60606	70606	80606	90606	100606	110606	120606
Thru-Wall	**Stresses (at time = 110004.) in psi.**												
Inside													
1/5T													
2/5T													
3/5T													
4/5T													
Outside													
Average =	11375	5087	-2678	-3814	-480	3828	8357	13775	20136	25976	30673	34027	33871

4.7.3 Applied Stresses for Nozzle 49C

Steady state axial and hoop stresses, on the downhill and the uphill sides of nozzle 49C are summarized in Tables 11 through 14 for the 48.7° penetration angle nozzle analyzed by DEI, as listed below. Stresses are provided for each node on the downhill and uphill sides of the nozzle, referenced to the inside surface nodal locations.

	DEI Analysis Case			Stress Summary Tables	
	Nozzle Angle*	Yield Strength	Type	Downhill Side	Uphill Side
Outermost nozzle	48.7°	45.0 ksi	Axial	11	12
Outermost nozzle	48.7°	45.0 ksi	Hoop	13	14

* Relative to the center of the head.

The axial stresses from the DEI analysis, reported every 15 degrees in the circumferential direction from 0-degrees (downhill side) to 180-degrees (uphill side), are also summarized. The stresses are summarized for the bottom of the weld locations in Table 15.

The steady state stresses are reviewed to determine which region from the downhill to the uphill location is the most highly stressed location. From Table 15, the maximum axial stress for the bottom of the weld location occurs at the uphill side. From review of Tables 13 and 14, it is clear that the maximum hoop stress below the weld occurs at the uphill side.

Table 11. Steady State Axial Stresses in 49° CRDM Nozzle "C" on Downhill Side

Plant:	Callaway	BON = Bottom of Nozzle
Source:	DEI [1]	BOW = Bottom of Weld
Penetration Angle:	48.7 Degrees	TOW = Top of Weld
Shrink Fit:	None	TOH = Top of Head
Nozzle Yield:	45.0 ksi	TON = Top of Nozzle

Inside Surface Node	Elevation	Wall Thickness		Residual Plus Operating Stresses (Time 110004) Through-Wall Position Inside	1/5T	2/5T	3/5T	4/5T	Outside	Average Value	Distance from Bottom of Nozzle
1			BON							-1740	
101										-599	
201										1850	
301										4939	
401										8052	
501										10894	
601			BOW							12287	
701										15900	
801										5008	
901										-13558	
1001										-30307	
1101										-27806	
1201										-19797	
1301										-7262	
1401			TOW							1967	
1501										13180	
1601										10869	
1701										9294	
1801										8860	
1901										7756	
2001										6310	
2101										4559	
2201										3104	
2301										2086	
2401										1624	
2501										1492	
2601										1480	
2701										1095	
2801										701	
2901										2061	
3001										2003	
3101										2369	
3201			TOH							2339	
3301			TON							2224	

Table 12. Steady State Axial Stresses in 49° CRDM Nozzle "C" on Uphill Side

Plant:	Callaway	BON = Bottom of Nozzle
Source:	DEI [1]	BOW = Bottom of Weld
Penetration Angle:	48.7 Degrees	TOW = Top of Weld
Shrink Fit:	None	TOH = Top of Head
Nozzle Yield:	45 0 ksi	TON = Top of Nozzle

Inside Surface Node	Elevation	Wall Thickness		Residual Plus Operating Stresses (Time 110004) Through-Wall Position Inside	1/5T	2/5T	3/5T	4/5T	Outside	Average Value	Distance from Bottom of Nozzle
120001			BON							261	
120101										4535	
120201										12240	
120301										20906	
120401										28310	
120501										34381	
120601			BOW							33628	
120701										32818	
120801										27443	
120901										25005	
121001										21164	
121101										19146	
121201										17722	
121301										14269	
121401			TOW							11318	
121501										2980	
121601										4659	
121701										4274	
121801										3865	
121901										2822	
122001										2134	
122101										1755	
122201										1557	
122301										1537	
122401										1651	
122501										1846	
122601										2061	
122701										2240	
122801										2337	
122901										2345	
123001										2288	
123101										2204	
123201			TOH							2131	
123301			TON							2102	

Table 13. Steady State Hoop Stresses in 49° CRDM Nozzle "C" on Downhill Side

Plant:	Callaway	BON = Bottom of Nozzle
Source:	DEI [1]	BOW = Bottom of Weld
Penetration Angle:	48.7 Degrees	TOW = Top of Weld
Shrink Fit:	None	TOH = Top of Head
Nozzle Yield:	45.0 ksi	TON = Top of Nozzle

Inside Surface Node	Elevation	Wall Thickness		Residual Plus Operating Stresses (Time 110004) Through-Wall Position Inside	1/5T	2/5T	3/5T	4/5T	Outside	Average Value	Distance from Bottom of Nozzle
1			BON							-23755	
101										-15334	
201										-11501	
301										-10516	
401										-8262	
501										-4494	
601			BOW							997	
701										21826	
801										32437	
901										30945	
1001										18655	
1101										19369	
1201										24974	
1301										30838	
1401			TOW							34334	
1501										40862	
1601										36937	
1701										29898	
1801										25842	
1901										23106	
2001										19830	
2101										15850	
2201										12054	
2301										9131	
2401										6866	
2501										5225	
2601										3628	
2701										3306	
2801										596	
2901										4277	
3001										5507	
3101										5441	
3201			TOH							5007	
3301			TON							4989	

Table 14. Steady State Hoop Stresses in 49° CRDM Nozzle "C" on Uphill Side

Plant:	Callaway	BON = Bottom of Nozzle
Source:	DEI [1]	BOW = Bottom of Weld
Penetration Angle:	48.7 Degrees	TOW = Top of Weld
Shrink Fit:	None	TOH = Top of Head
Nozzle Yield:	45 0 ksi	TON = Top of Nozzle

Inside Surface Node	Elevation	Wall Thickness		Residual Plus Operating Stresses (Time 110004) Through-Wall Position Inside	1/5T	2/5T	3/5T	4/5T	Outside	Average Value	Distance from Bottom of Nozzle
120001			BON							-11328	
120101										-2053	
120201										1437	
120301										9223	
120401										16953	
120501										33705	
120601			BOW							44149	
120701										56064	
120801										56103	
120901										56633	
121001										56001	
121101										54277	
121201										51502	
121301										46462	
121401			TOW							38527	
121501										29339	
121601										19488	
121701										8351	
121801										4747	
121901										1293	
122001										511	
122101										1291	
122201										2298	
122301										3313	
122401										4252	
122501										4956	
122601										5330	
122701										5388	
122801										5258	
122901										5109	
123001										5034	
123101										5028	
123201			TOH							5056	
123301			TON							5071	

Table 15. Axial Stresses Along the Circumference at the Bottom of the Weld in 49 deg. Nozzle "C"
Source: DEI [1]

Location-->	**Downhill 0 deg.**	**15 deg.**	**30 deg.**	**45 deg.**	**60 deg.**	**75 deg.**	**90 deg.**	**105 deg.**	**120 deg.**	**135 deg.**	**150 deg.**	**165 deg.**	**Uphill 180 deg.**
Nodes -->	601	10601	20601	30601	40601	50601	60601	70601	80601	90601	100601	110601	120601
Thru Node	606	10606	20606	30606	40606	50606	60606	70606	80606	90606	100606	110606	120606
Thru-Wall	**Stresses (at time = 110004.) in psi.**												
Inside													
1/5T													
2/5T													
3/5T													
4/5T													
Outside													
Average =	12287	5060	-2124	-4414	-225	4840	9887	15114	21188	27080	31557	34590	37252

4.8 Acceptance Criteria

The acceptance criteria for the postulated circumferential and axial through-wall flaws are provided in Table 1 (Reference 5). The acceptance criterion for postulated circumferential flaws below the weld is 75 percent of the circumference. For hypothetical axial through-wall flaws located below the weld, there is no limit (i.e. the allowable flaw size is the full height of the nozzle below the weld).

4.9 Flaw Evaluations

Hypothetical flaw evaluations are performed for Callaway, to determine the maximum allowable beginning-of-life (BOL) through-wall flaw size, at various postulated flaw regions and for various heights of nozzles below the weld (represented by the three DEI finite element models discussed in Section 4.2), which would not reach critical flaw size considering a period of seven years between inspections.

Two types of through-wall flaws were considered in the outermost CRDM nozzle, as follows:

a) Circumferential flaw located at the bottom of the J-groove weld (referred to as flaw #1a through #1c where "a" through "c" represent the three heights of the nozzles),

b) Axial flaw or edge crack located at the bottom of the nozzle (referred to as flaw #2a through #2c where "a" through "c" represent the three heights of the nozzles).

Crack growths were predicted using the primary water stress corrosion crack growth model of Section 4.5, the applicable stress intensity factor solutions described in Sections 4.6.1 and 4.6.2, and the applied stresses provided in Section 4.7. Since through-wall flaws are considered in this evaluation, the average nozzle stresses are the applicable stresses.

4.9.1 Flaw Evaluation for Nozzle 49A

For nozzle #49A (corresponding to DEI model 48.7A), the stress coefficients (A-coefficients) for the polynomial expressions in the SIF solutions for flaws #1a, #2a downhill side, and #2a uphill side are provided in Tables 16, 18, and 19, respectively. The flaw evaluations for the period of seven years between inspections are provided in Tables 17, 20, and 21, respectively for the above flaws.

Table 16. Axial Stresses Along the Circumference at the Bottom of the Weld in Nozzle 49A (Uphill Side)

STRESS INTENSITY FACTOR FOR CIRCUMFERENTIAL FLAW

Basis: Buchalet and Bamford solution for a through-wall crack in an infinite body [6]

$$KI = \sqrt{(\pi * a)} * [(A_0 + Ap) + (2a/\pi)A_1 + (a^2/2) A_2 + (4a^3)/(3\pi) A_3]$$

where the through-wall stress distribution is described by the third order polynomial,

$$S(x) = A_0 + A_1x + A_2x^2 + A_3x^3.$$

and Ap = pressure on the crack face

Through-Wall Axial Stresses for Crack Growth:

Wall Position x (in.)	Steady State Stresses SS (ksi)
0.00000	32.498
0.44179	31.362
0.88357	27.375
1.32536	22.616
1.76715	17.650
2.20893	12.140
2.65072	7.544
3.09251	4.195
3.53429	1.413
3.97608	-1.270

Note: x is measured from the center of the flawed surface.

Stress Coefficients:

Stress Coeff.	Steady State Stresses SS (ksi)
A_0	32.942535
A_1	-3.227399
A_2	-4.417400
A_3	0.778762

Table 17. Circumferential Growth of Flaw #1a in Nozzle 49A (Bottom of Weld, Uphill Side) for 7 years

Circumferential Flaw Growth for a Through-wall Crack in an Infinite Body

Stress intensity factor: $KI = \sqrt{(\pi * a)} * [(A_0 + A_p) + (2a/\pi)A_1 + (a^2/2) A_2 + (4a^3)/(3\pi) A_3]$

where a = flaw length

$S(x) = A_0 + A_1x + A_2x^2 + A_3x^3$

A_p = [ ] ksi (pressure on crack face)

Flaw growth: $\Delta a = [C_o (1.17\times10^{-10}) (K_I - 8.19)^{1.16}$ in./sec. $] \Delta t$

C_o = [ ]

Additional parameters:

Δt = 15768000 sec.

Initial time = 0.00 years

R = [ ] in. (mean radius)

c = [ ] in. (mean circumference)

Flaw length (a) = [ ] in.

Crack length (2a) = [ ] in.

as a % of circumference = 67.7 %

Flaw Growth Calculations:

Time	a	σ	K_I	Δa	Percent of Circ.
(years)	(in.)	(ksi)	(ksi√in)	(in.)	(%)
0.00		14.725	49.45	0.02922	67.7
0.50		14.576	49.15	0.02897	68.3
1.00		14.431	48.85	0.02873	68.8
1.50		14.289	48.56	0.02849	69.4
2.00		14.151	48.28	0.02826	69.9
2.50		14.016	48.00	0.02803	70.4
3.00		13.885	47.73	0.02781	71.0
3.50		13.757	47.47	0.02760	71.5
4.00		13.632	47.21	0.02739	72.0
4.50		13.511	46.96	0.02718	72.5
5.00		13.393	46.71	0.02698	73.0
5.50		13.279	46.47	0.02679	73.5
6.00		13.167	46.24	0.02660	74.0
6.50		13.059	46.01	0.02642	74.5
7.00		12.954	45.80	0.02624	75.0

Table 18. Hoop Stresses from Bottom of Nozzle to Bottom of Weld in Nozzle 49A (Downhill Side)

STRESS INTENSITY FACTOR FOR EDGE CRACK

Basis: Buchalet and Bamford solution for continuous surface crack in semi-infinite body [6]

$$KI = 1.12\sqrt{(\pi * a)} * [\ (A_0 + A_p) + (2a/\pi)A_1 + (a^2/2)\ A_2 + (4a^3)/(3\pi)\ A_3\ ]$$

where the through-wall stress distribution is described by the third order polynomial,

$$S(x) = A_0 + A_1x + A_2x^2 + A_3x^3.$$

and Ap = pressure on the crack face

Through-Wall Hoop Stresses for Crack Growth:

Wall Position x (in.)	Steady State Stresses SS (ksi)
0.00000	-11.953
0.62400	-7.506
1.12400	-2.518
1.52500	6.425
1.84600	14.683
2.10300	22.700
2.30900	39.193

Note: x is measured from the bottom of the nozzle.

Stress Coefficients:

Stress Coeff.	Steady State Stresses SS (ksi)
A_0	-12.164
A_1	12.644
A_2	-10.465
A_3	6.192

Table 19. Hoop Stresses from Bottom of Nozzle to Bottom of Weld in Nozzle 49A (Uphill Side)

STRESS INTENSITY FACTOR FOR EDGE CRACK

Basis: Buchalet and Bamford solution for continuous surface crack in semi-infinite body [6]

$$KI = 1.12\sqrt{(\pi * a)} * [\ (A_0 + A_p) + (2a/\pi)A_1 + (a^2/2)\ A_2 + (4a^3)/(3\pi)\ A_3\ ]$$

where the through-wall stress distribution is described by the third order polynomial,

$$S(x) = A_0 + A_1x + A_2x^2 + A_3x^3.$$

and Ap = pressure on the crack face

Through-Wall Hoop Stresses for Crack Growth:

Wall Position x	Steady State Stresses SS
(in.)	(ksi)
0.00000	-5.639
2.00200	-5.987
3.60600	-1.319
4.89100	6.503
5.92100	14.771
6.74600	31.030
7.40600	42.431

Note: x is measured from the bottom of the nozzle.

Stress Coefficients:

Stress Coeff.	Steady State Stresses SS
	(ksi)
A_0	-5.767
A_1	0.343
A_2	-0.415
A_3	0.169

Table 20. Axial Growth of Flaw #2a in Nozzle 49A (Bottom of Nozzle, Downhill Side) for 7 years

Axial Flaw Growth for a Continuous Surface Crack in a Semi-Infinite Body (Edge Crack)

Stress intensity factor: $KI = 1.12\sqrt{(\pi * a)} * [\ (A_0 + A_p) + (2a/\pi)A_1 + (a^2/2)\ A_2 + (4a^3)/(3\pi)\ A_3\ ]$

where a = flaw length

$S(x) = A_0 + A_1x + A_2x^2 + A_3x^3$.

A_p = [ ] ksi (pressure on crack face)

Flaw growth: $\Delta a = [\ C_o\ (1.17\times10^{-10})\ (K_I - 8.19)^{1.16}$ in./sec. $]\ \Delta t$

C_o = [ ]

Additional parameters:

Δt =	15768000	sec.
Initial time =	0.00	years
Flaw length (a) = [		] in.
height = [		] in. (height of nozzle below weld)
as a % of the height =	91.3	%
minimum inspection height =	0.200	in. (downhill side)

Flaw Growth Calculations:

Time	a	σ	K_I	Δa	Percent of Height
(years)	(in.)	(ksi)	(ksi√in)	(in.)	(%)
0.00		17.162	49.48	0.02924	91.3
0.50		17.545	50.93	0.03044	92.6
1.00		17.944	52.46	0.03170	93.9
1.50		18.360	54.06	0.03304	95.3
2.00		18.793	55.75	0.03446	96.7
2.50		19.245	57.53	0.03596	98.2
3.00		19.716	59.41	0.03755	99.8
3.50		20.207	61.38	0.03923	101.4
4.00		20.718	63.46	0.04101	103.1
4.50		21.250	65.65	0.04290	104.9
5.00		21.805	67.95	0.04491	106.7
5.50		22.381	70.38	0.04703	108.7
6.00		22.981	72.94	0.04929	110.7
6.50		23.603	75.64	0.05167	112.9
7.00		24.248	78.47	0.05420	115.1

Table 21. Axial Growth of Flaw #2a in Nozzle 49A (Bottom of Nozzle, Uphill Side) for 7 years

Axial Flaw Growth for a Continuous Surface Crack in a Semi-Infinite Body (Edge Crack)

Stress intensity factor: $KI = 1.12\sqrt{(\pi * a)} * [(A_0 + A_p) + (2a/\pi)A_1 + (a^2/2) A_2 + (4a^3)/(3\pi) A_3]$

where a = flaw length

$S(x) = A_0 + A_1x + A_2x^2 + A_3x^3$

A_p = [ ] ksi (pressure on crack face)

Flaw growth: $\Delta a = [C_o (1.17\times10^{-10}) (K_I - 8.19)^{1.16}$ in./sec. $] \Delta t$

C_o = [ ]

Additional parameters:

Δt =	15768000	sec.
Initial time =	0.00	years
Flaw length (a) = [		] in.
height = [		] in. (height of nozzle below weld)
as a % of the height =	#DIV/0!	%
minimum inspection height =	-6.775	in. (uphill side)

Flaw Growth Calculations:

Time	a	σ	K_I	Δa	Percent of Height
(years)	(in.)	(ksi)	(ksi√in)	(in.)	(%)
0.00		10.847	56.05	0.03471	91.5
0.50		11.102	57.51	0.03594	91.9
1.00		11.369	59.05	0.03724	92.4
1.50		11.649	60.67	0.03862	92.9
2.00		11.943	62.38	0.04008	93.5
2.50		12.253	64.18	0.04163	94.0
3.00		12.578	66.08	0.04328	94.6
3.50		12.922	68.09	0.04503	95.1
4.00		13.284	70.23	0.04690	95.8
4.50		13.667	72.49	0.04889	96.4
5.00		14.073	74.90	0.05102	97.0
5.50		14.503	77.46	0.05330	97.7
6.00		14.960	80.19	0.05574	98.5
6.50		15.446	83.12	0.05838	99.2
7.00		15.965	86.25	0.06122	100.0

4.9.2 Flaw Evaluation for Nozzle 49B

For nozzle #49B (corresponding to DEI model 48.7B), the stress coefficients (A-coefficients) for the polynomial expressions in the SIF solutions for flaws #1b, #2b downhill side, and #2b uphill side are provided in Tables 22, 24, and 25, respectively. The flaw evaluations for the period of seven years between inspections are provided in Tables 23, 26, and 27, respectively for the above flaws.

Table 22. Axial Stresses Along the Circumference at the Bottom of the Weld in Nozzle 49B (Uphill Side)

STRESS INTENSITY FACTOR FOR CIRCUMFERENTIAL FLAW

Basis: Buchalet and Bamford solution for a through-wall crack in an infinite body [6]

$$KI = \sqrt{(\pi * a)} * [(A_0 + Ap) + (2a/\pi)A_1 + (a^2/2) A_2 + (4a^3)/(3\pi) A_3]$$

where the through-wall stress distribution is described by the third order polynomial,

$$S(x) = A_0 + A_1x + A_2x^2 + A_3x^3.$$

and Ap = pressure on the crack face

Through-Wall Axial Stresses for Crack Growth:

Wall Position x (in.)	Steady State Stresses SS (ksi)
0.00000	33.871
0.44179	34.027
0.88357	30.673
1.32536	25.976
1.76715	20.136
2.20893	13.775
2.65072	8.357
3.09251	3.828
3.53429	-0.480
3.97608	-3.814

Note: x is measured from the center of the flawed surface.

Stress Coefficients:

Stress Coeff.	Steady State Stresses SS (ksi)
A_0	34.316467
A_1	0.735853
A_2	-6.711455
A_3	1.041654

Table 23. Circumferential Growth of Flaw #1b in Nozzle 49B (Bottom of Weld, Uphill Side) for 7 years

Circumferential Flaw Growth for a Through-wall Crack in an Infinite Body

Stress intensity factor: $KI = \sqrt{(\pi * a)} * [(A_0 + A_p) + (2a/\pi)A_1 + (a^2/2) A_2 + (4a^3)/(3\pi) A_3]$

where a = flaw length

$S(x) = A_0 + A_1x + A_2x^2 + A_3x^3$

A_p = [ ] ksi (pressure on crack face)

Flaw growth: $\Delta a = [C_o (1.17\times10^{-10}) (K_I - 8.19)^{1.16}$ in./sec. $] \Delta t$

C_o = [ ]

Additional parameters:

Δt = 15768000 sec.

Initial time = 0.00 years

R = [ ] in. (mean radius)

c = [ ] in. (mean circumference)

Flaw length (a) = [ ] in.

Crack length (2a) = [ ] in.

as a % of circumference = 67.2 %

Flaw Growth Calculations

Time	a	σ	K_I	Δa	Percent of Circ.
(years)	(in.)	(ksi)	(ksi√in)	(in.)	(%)
0.00		15.700	52.54	0.03178	67.2
0.50		15.492	52.08	0.03139	67.8
1.00		15.289	51.62	0.03101	68.4
1.50		15.091	51.17	0.03063	69.0
2.00		14.899	50.72	0.03027	69.6
2.50		14.711	50.29	0.02991	70.2
3.00		14.529	49.87	0.02956	70.7
3.50		14.351	49.45	0.02922	71.3
4.00		14.179	49.05	0.02889	71.8
4.50		14.011	48.65	0.02856	72.4
5.00		13.848	48.26	0.02825	72.9
5.50		13.690	47.89	0.02794	73.5
6.00		13.536	47.52	0.02764	74.0
6.50		13.387	47.16	0.02735	74.5
7.00		13.242	46.81	0.02706	75.0

Table 24. Hoop Stresses from Bottom of Nozzle to Bottom of Weld in Nozzle 49B (Downhill Side)

STRESS INTENSITY FACTOR FOR EDGE CRACK

Basis: Buchalet and Bamford solution for continuous surface crack in semi-infinite body [6]

$$KI = 1.12\sqrt{(\pi * a)} * [\ (A_0 + A_p) + (2a/\pi)A_1 + (a^2/2)\ A_2 + (4a^3)/(3\pi)\ A_3\ ]$$

where the through-wall stress distribution is described by the third order polynomial,

$$S(x) = A_0 + A_1x + A_2x^2 + A_3x^3.$$

and Ap = pressure on the crack face

Through-Wall Hoop Stresses for Crack Growth:

Wall Position x (in.)	Steady State Stresses SS (ksi)
0.00000	-18.683
0.38400	-11.138
0.69100	-4.834
0.93800	-0.323
1.13500	1.555
1.29300	6.837
1.42000	16.711

Note: x is measured from the bottom of the nozzle.

Stress Coefficients:

Stress Coeff.	Steady State Stresses SS (ksi)
A_0	-19.048
A_1	36.929
A_2	-41.623
A_3	22.962

Table 25. Hoop Stresses from Bottom of Nozzle to Bottom of Weld in Nozzle 49B (Uphill Side)

STRESS INTENSITY FACTOR FOR EDGE CRACK

Basis: Buchalet and Bamford solution for continuous surface crack in semi-infinite body [6]

$$KI = 1.12\sqrt{(\pi * a)} * [\ (A_0 + A_p) + (2a/\pi)A_1 + (a^2/2)\ A_2 + (4a^3)/(3\pi)\ A_3\ ]$$

where the through-wall stress distribution is described by the third order polynomial,

$$S(x) = A_0 + A_1x + A_2x^2 + A_3x^3.$$

and Ap = pressure on the crack face

Through-Wall Hoop Stresses for Crack Growth:

Wall Position x	Steady State Stresses SS
(in.)	(ksi)
0.00000	-9.500
2.00200	-4.235
3.60600	0.785
4.89100	8.560
5.92100	15.976
6.74600	32.476
7.40600	43.430

Note: x is measured from the bottom of the nozzle.

Stress Coefficients:

Stress Coeff.	Steady State Stresses SS
	(ksi)
A_0	-9.585
A_1	4.662
A_2	-1.353
A_3	0.229

Table 26. Axial Growth of Flaw #2b in Nozzle 49B (Bottom of Nozzle, Downhill Side) for 7 years

Axial Flaw Growth for a Continuous Surface Crack in a Semi-Infinite Body (Edge Crack)

Stress intensity factor: $KI = 1.12\sqrt{(\pi * a)} * [(A_0 + A_p) + (2a/\pi)A_1 + (a^2/2) A_2 + (4a^3)/(3\pi) A_3]$

where a = flaw length

$S(x) = A_0 + A_1x + A_2x^2 + A_3x^3$.

A_p = [ ] ksi (pressure on crack face)

Flaw growth: $\Delta a = [C_o (1.17\times10^{-10}) (K_I - 8.19)^{1.16}$ in./sec. $] \Delta t$

C_o = [ ]

Additional parameters:

Δt =	15768000	sec.
Initial time =	0.00	years
Flaw length (a) = [		] in.
height = [		] in. (height of nozzle below weld)
as a % of the height =	100.0	%
minimum inspection height =	0.000	in. (downhill side)

Flaw Growth Calculations

Time	a	σ	K_I	Δa	Percent of Height
(years)	(in.)	(ksi)	(ksi√in)	(in.)	(%)
0.00		2.608	6.17	0.00000	100.0
0.50		2.608	6.17	0.00000	100.0
1.00		2.608	6.17	0.00000	100.0
1.50		2.608	6.17	0.00000	100.0
2.00		2.608	6.17	0.00000	100.0
2.50		2.608	6.17	0.00000	100.0
3.00		2.608	6.17	0.00000	100.0
3.50		2.608	6.17	0.00000	100.0
4.00		2.608	6.17	0.00000	100.0
4.50		2.608	6.17	0.00000	100.0
5.00		2.608	6.17	0.00000	100.0
5.50		2.608	6.17	0.00000	100.0
6.00		2.608	6.17	0.00000	100.0
6.50		2.608	6.17	0.00000	100.0
7.00		2.608	6.17	0.00000	100.0

Table 27. Axial Growth of Flaw #2b in Nozzle 49B (Bottom of Nozzle, Uphill Side) for 7 years

Axial Flaw Growth for a Continuous Surface Crack in a Semi-Infinite Body (Edge Crack)

Stress intensity factor: $KI = 1.12\sqrt{(\pi * a)} * [(A_0 + A_p) + (2a/\pi)A_1 + (a^2/2) A_2 + (4a^3)/(3\pi) A_3]$

where a = flaw length

$S(x) = A_0 + A_1x + A_2x^2 + A_3x^3$.

A_p = [ ] ksi (pressure on crack face)

Flaw growth: $\Delta a = [C_o (1.17\times10^{-10}) (K_I - 8.19)^{1.16}$ in./sec. $] \Delta t$

C_o = [ ]

Additional parameters:

Δt =	15768000	sec.
Initial time =	0.00	years
Flaw length (a) = [		] in.
height = [		] in. (height of nozzle below weld)
as a % of the height =	90.7	%
minimum inspection height =	0.690	in. (uphill side)

Flaw Growth Calculations

Time	a	σ	K_I	Δa	Percent of Height
(years)	(in.)	(ksi)	(ksi√in)	(in.)	(%)
0.00	( )	11.659	59.98	0.03803	90.7
0.50		11.929	61.54	0.03937	91.2
1.00		12.212	63.19	0.04078	91.7
1.50		12.510	64.92	0.04228	92.3
2.00		12.824	66.76	0.04387	92.8
2.50		13.155	68.70	0.04556	93.4
3.00		13.503	70.75	0.04735	94.1
3.50		13.872	72.93	0.04927	94.7
4.00		14.261	75.24	0.05132	95.4
4.50		14.675	77.70	0.05351	96.1
5.00		15.113	80.32	0.05586	96.8
5.50		15.580	83.12	0.05838	97.5
6.00		16.077	86.12	0.06110	98.3
6.50		16.608	89.34	0.06404	99.1
7.00		17.176	92.80	0.06721	100.0

4.9.3 Flaw Evaluation for Nozzle 49C

For nozzle #43C (corresponding to DEI model 48.7C), the stress coefficients (A-coefficients) for the polynomial expressions in the SIF solutions for flaws #1c, #2c downhill side, and #2c uphill side are provided in Tables 28, 30, and 31, respectively. The flaw evaluations for the period of seven years between inspections are provided in Tables 29, 32, and 33, respectively for the above flaws.

Table 28. Axial Stresses Along the Circumference at the Bottom of the Weld in Nozzle 49C (Uphill Side)

STRESS INTENSITY FACTOR FOR CIRCUMFERENTIAL FLAW

Basis: Buchalet and Bamford solution for a through-wall crack in an infinite body [6]

$$KI = \sqrt{(\pi * a)} * [(A_0 + Ap) + (2a/\pi)A_1 + (a^2/2) A_2 + (4a^3)/(3\pi) A_3]$$

where the through-wall stress distribution is described by the third order polynomial,

$$S(x) = A_0 + A_1x + A_2x^2 + A_3x^3.$$

and Ap = pressure on the crack face

Through-Wall Axial Stresses for Crack Growth:

Wall Position x (in.)	Steady State Stresses SS (ksi)
0.00000	37.252
0.44179	34.590
0.88357	31.557
1.32536	27.080
1.76715	21.188
2.20893	15.114
2.65072	9.887
3.09251	4.840
3.53429	-0.225
3.97608	-4.414

Note: x is measured from the center of the flawed surface.

Stress Coefficients:

Stress Coeff.	Steady State Stresses SS (ksi)
A_0	37.197805
A_1	-3.404710
A_2	-4.259170
A_3	0.627088

Table 29. Circumferential Growth of Flaw #1c in Nozzle 49C (Bottom of Weld, Uphill Side) for 7 years

Circumferential Flaw Growth for a Through-wall Crack in an Infinite Body

Stress intensity factor: $KI = \sqrt{(\pi * a)} * [(A_0 + A_p) + (2a/\pi)A_1 + (a^2/2) A_2 + (4a^3)/(3\pi) A_3]$

where a = flaw length

$S(x) = A_0 + A_1x + A_2x^2 + A_3x^3$.

A_p = [ ] ksi (pressure on crack face)

Flaw growth: $\Delta a = [C_o (1.17\times10^{-10}) (K_I - 8.19)^{1.16}$ in./sec. $] \Delta t$

C_o = [ ]

Additional parameters:

Δt = 15768000 sec.

Initial time = 0.00 years

R = [ ] in. (mean radius)

c = [ ] in. (mean circumference)

Flaw length (a) = [ ] in.

Crack length (2a) = [ ] in.

as a % of circumference = 66.4 %

Flaw Growth Calculations

Time	a	σ	K_I	Δa	Percent of Circ.
(years)	(in.)	(ksi)	(ksi√in)	(in.)	(%)
0.00		17.107	56.90	0.03543	66.4
0.50		16.850	56.33	0.03495	67.1
1.00		16.599	55.76	0.03447	67.8
1.50		16.353	55.20	0.03399	68.4
2.00		16.112	54.64	0.03353	69.1
2.50		15.877	54.09	0.03306	69.7
3.00		15.646	53.54	0.03261	70.3
3.50		15.420	53.00	0.03215	70.9
4.00		15.199	52.46	0.03171	71.5
4.50		14.983	51.93	0.03127	72.1
5.00		14.772	51.41	0.03084	72.7
5.50		14.566	50.89	0.03041	73.3
6.00		14.364	50.39	0.02999	73.9
6.50		14.167	49.88	0.02958	74.4
7.00		13.975	49.39	0.02917	75.0

Table 30. Hoop Stresses from Bottom of Nozzle to Bottom of Weld in Nozzle 49C (Downhill Side)

STRESS INTENSITY FACTOR FOR EDGE CRACK

Basis: Buchalet and Bamford solution for continuous surface crack in semi-infinite body [6]

$$KI = 1.12\sqrt{(\pi * a)} * [\ (A_0 + A_p) + (2a/\pi)A_1 + (a^2/2)\ A_2 + (4a^3)/(3\pi)\ A_3\ ]$$

where the through-wall stress distribution is described by the third order polynomial,

$$S(x) = A_0 + A_1x + A_2x^2 + A_3x^3.$$

and Ap = pressure on the crack face

Through-Wall Hoop Stresses for Crack Growth:

Wall Position x (in.)	Steady State Stresses SS (ksi)
0.00000	-23.755
0.21700	-15.334
0.39100	-11.501
0.53100	-10.516
0.64300	-8.262
0.73200	-4.494
0.80400	0.997

Note: x is measured from the bottom of the nozzle.

Stress Coefficients:

Stress Coeff.	Steady State Stresses SS (ksi)
A_0	-23.908
A_1	69.787
A_2	-153.353
A_3	129.906

Table 31. Hoop Stresses from Bottom of Nozzle to Bottom of Weld in Nozzle 49C (Uphill Side)

STRESS INTENSITY FACTOR FOR EDGE CRACK

Basis: Buchalet and Bamford solution for continuous surface crack in semi-infinite body [6]

$$KI = 1.12\sqrt{(\pi * a)} * [\ (A_0 + A_p) + (2a/\pi)A_1 + (a^2/2)\ A_2 + (4a^3)/(3\pi)\ A_3\ ]$$

where the through-wall stress distribution is described by the third order polynomial,

$$S(x) = A_0 + A_1x + A_2x^2 + A_3x^3.$$

and Ap = pressure on the crack face

Through-Wall Hoop Stresses for Crack Growth:

Wall Position x (in.)	Steady State Stresses SS (ksi)
0.00000	-11.328
2.00200	-2.053
3.60600	1.437
4.89100	9.223
5.92100	16.953
6.74600	33.705
7.40600	44.149

Note: x is measured from the bottom of the nozzle.

Stress Coefficients:

Stress Coeff.	Steady State Stresses SS (ksi)
A_0	-11.250
A_1	7.511
A_2	-2.108
A_3	0.286

Table 32. Axial Growth of Flaw #2c in Nozzle 49C (Bottom of Nozzle, Downhill Side) for 7 years

Axial Flaw Growth for a Continuous Surface Crack in a Semi-Infinite Body (Edge Crack)

Stress intensity factor: $KI = 1.12\sqrt{(\pi * a)} * [(A_0 + A_p) + (2a/\pi)A_1 + (a^2/2) A_2 + (4a^3)/(3\pi) A_3]$

where a = flaw length

$S(x) = A_0 + A_1x + A_2x^2 + A_3x^3$

A_p = [ ] ksi (pressure on crack face)

Flaw growth: $\Delta a = [C_o (1.17\times10^{-10}) (K_I - 8.19)^{1.16}$ in./sec. $] \Delta t$

C_o = [ ]

Additional parameters:

Δt =	15768000	sec.
Initial time =	0.00	years
Flaw length (a) = [		] in.
height = [		] in. (height of nozzle below weld)
as a % of the height =	100.0	%
minimum inspection height =	0.000	in. (downhill side)

Flaw Growth Calculations

Time	a	σ	K_I	Δa	Percent of Height
(years)	(in.)	(ksi)	(ksi√in)	(in.)	(%)
0.00		-6.767	-12.04	0.00000	100.0
0.50		-6.767	-12.04	0.00000	100.0
1.00		-6.767	-12.04	0.00000	100.0
1.50		-6.767	-12.04	0.00000	100.0
2.00		-6.767	-12.04	0.00000	100.0
2.50		-6.767	-12.04	0.00000	100.0
3.00		-6.767	-12.04	0.00000	100.0
3.50		-6.767	-12.04	0.00000	100.0
4.00		-6.767	-12.04	0.00000	100.0
4.50		-6.767	-12.04	0.00000	100.0
5.00		-6.767	-12.04	0.00000	100.0
5.50		-6.767	-12.04	0.00000	100.0
6.00		-6.767	-12.04	0.00000	100.0
6.50		-6.767	-12.04	0.00000	100.0
7.00		-6.767	-12.04	0.00000	100.0

Table 33. Axial Growth of Flaw #2c in Nozzle 49C (Bottom of Nozzle, Uphill Side) for 7 years

Axial Flaw Growth for a Continuous Surface Crack in a Semi-Infinite Body (Edge Crack)

Stress intensity factor: $KI = 1.12\sqrt{(\pi * a)} * [(A_0 + A_p) + (2a/\pi)A_1 + (a^2/2) A_2 + (4a^3)/(3\pi) A_3]$

where a = flaw length

$S(x) = A_0 + A_1x + A_2x^2 + A_3x^3$.

A_p = [ ] ksi (pressure on crack face)

Flaw growth: $\Delta a = [C_o (1.17\times10^{-10}) (K_I - 8.19)^{1.16}$ in./sec. $] \Delta t$

C_o = [ ]

Additional parameters:

Δt =	15768000	sec.
Initial time =	0.00	years
Flaw length (a) = [		] in.
height = [		] in. (height of nozzle below weld)
as a % of the height =	90.1	%
minimum inspection height =	0.731	in. (uphill side)

Flaw Growth Calculations

Time	a	σ	K_I	Δa	Percent of Height
(years)	(in.)	(ksi)	(ksi√in)	(in.)	(%)
0.00		12.188	62.51	0.04020	90.1
0.50		12.470	64.15	0.04161	90.7
1.00		12.767	65.88	0.04310	91.2
1.50		13.079	67.70	0.04469	91.8
2.00		13.409	69.64	0.04638	92.4
2.50		13.757	71.69	0.04818	93.0
3.00		14.125	73.86	0.05010	93.7
3.50		14.515	76.18	0.05215	94.4
4.00		14.929	78.64	0.05435	95.1
4.50		15.370	81.28	0.05672	95.8
5.00		15.839	84.09	0.05926	96.6
5.50		16.340	87.11	0.06200	97.4
6.00		16.876	90.35	0.06497	98.2
6.50		17.451	93.85	0.06818	99.1
7.00		18.069	97.62	0.07168	100.0

4.10 Required Vertical Interface (Contact Area) Between Nozzle and Weld

As a result of a potential for lack of weld fusion, the full contact height of the weld may not be present. This Appendix addresses the required contact height of the weld at the CRDM nozzle-to-weld interface region. The ASME Code criterion of limiting the shear stress to 0.6 Sm as defined by paragraph NB-3227.2 of the ASME Code (Reference 4) is utilized. The external applied load is primarily due to design pressure. The calculations are given below:

p = [ ] (Reference 8)
Ro = [ ]
Sm = 23300 psi

Shear load:

$$Fs = p\pi Ro^2$$
$$= 31414 \text{ lbs}$$

Stress criterion:

$$Fs/A = 0.6Sm$$
$$= 13980 \text{ psi}$$

Contact area,

$$A = (2\pi Ro)H \text{ in.}^2$$

Required weld height,

$$H = Fs / (2\pi Ro) / (0.6Sm)$$
$$= 0.1788 \text{ in.} \quad \text{(use 0.25 in.)}$$

During upset and emergency conditions peak pressure value as high as [ ] is also acceptable. Therefore, the required height of the weld (all the way around the circumference) at the CRDM nozzle-to-weld interface is 0.25 inches.

5.0 RESULTS, SUMMARY/CONCLUSION

Flaw evaluations have been performed for the hypothetical flaws in the outermost CRDM nozzle of Callaway reactor vessel closure head (RVCH) nozzle penetrations 74 through 78. This evaluation is limited to the portions of the CRDM nozzles from the bottom of the nozzle to the bottom of the attachment weld. Flaw growth was calculated considering primary water stress corrosion cracking. The maximum allowable BOL flaws were determined considering the flaw acceptance criteria given in Section 4.8. The evaluations were performed for a period of seven years between inspections.

5.1 Minimum Inspection Height for Axial Flaws

The required minimum inspection heights for the downhill and uphill sides for the "as-designed" CRDM nozzle 49A, and the "as-built" fillet welded nozzles 49B and 49C, are summarized in Table 34 with an illustration in Figure 4.

Table 34. Summary of Minimum Inspection Heights for Axial Flaws Below the Weld

Nozzle Fillet Weld Design[1]	Length of Nozzle Below Weld (inch)	Minimum Inspection Height	
		Downhill (inch)	Uphill (inch)
49A	[ ]	0.200	0.631
49B		0.000	0.690
49C		0.000	0.731

Considering As-Designed and As-Built fillet weld sizes (see Figure 2 and Figure 3)

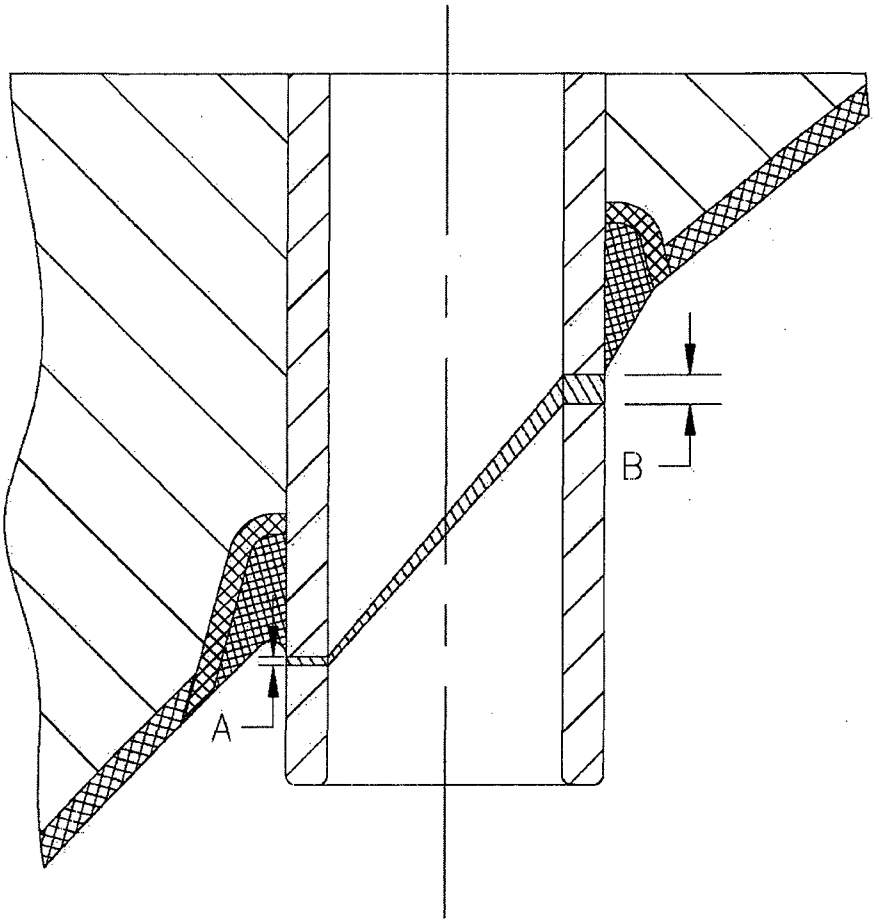

Figure 4. Schematic Showing the Required "Minimum Inspection Band " from Downhill to Uphill Side

5.2 Circumferential Below the Weld Through-Wall Flaws

The maximum allowable circumferential below the weld through-wall flaws for the "as-designed" CRDM nozzle 49A, and the "as-built" fillet welded nozzles 49B and 49C, are summarized in Table 35 below.

Table 35. Summary of Circumferential Below Weld Through-Wall Flaws

Nozzle Fillet Weld Design[1]	Length of Nozzle Below Weld (inch)	Maximum Allowable Flaw Size
49A		67.7% of circumference
49B		67.2% of circumference
49C		66.4% of circumference

Considering as-Designed and as-Built fillet weld sizes (see Figure 2 and Figure 3)

6.0 REFERENCES

1. AREVA NP Document 32-9045848-000, "Transmittal of DEI Calc. C-4181-00-01, Rev. 1, "Callaway Upper Head CRDM Nozzle Welding Residual Stress Analysis," March 2007.

2. AREVA NP Document 51-9043028-000, "RPV Head Penetration Inspection Plan and Coverage Assessment for AmerenUE Callaway Plant," February 2007.

3. * Combustion Engineering Drawing No. 11173-112-002, Rev 03, "Control Rod Mechanism Housing Details

4. ASME Boiler and Pressure Vessel Code, Section III, 1971 Edition including Addenda through Winter of 1972.

5. NRC Letter from Richard Barrett, Director Division of Engineering, Office of NRR to Alex Marion of Nuclear Energy Institute, "Flaw Evaluation Guidelines," April 11, 2003, Accession Number ML030980322.

6. Attachment 2 to Reference 5, "Enclosure 2 Appendix A: Evaluation of Flaws in PWR Reactor Vessel Upper Head Penetration Nozzles," April 11, 2003, Accession Number ML030980333.

7. Buchalet, C. B. and Bamford, W.H., "Stress Intensity Factor Solutions for Continuous Surface Flaws in Reactor Pressure Vessels," Mechanics of Crack Growth, ASTM STP 590, American Society of Testing and Materials, 1976, pp. 385-402.

8. AREVA NP Document 38-9046724-000, "Transmittal of Input Doc. NET 07-0056 from AmerenUE for RVCH Flaw Evaluation," March 2007.

* Reference 3 is not retrievable from the AREVA NP document control system but is referenced here in accordance with AREVA NP Procedure 0402-01, Appendix 2.

W. A. Thomas
Project Manager

7.0 COMPUTER OUTPUT

There is no computer output associated with this document.