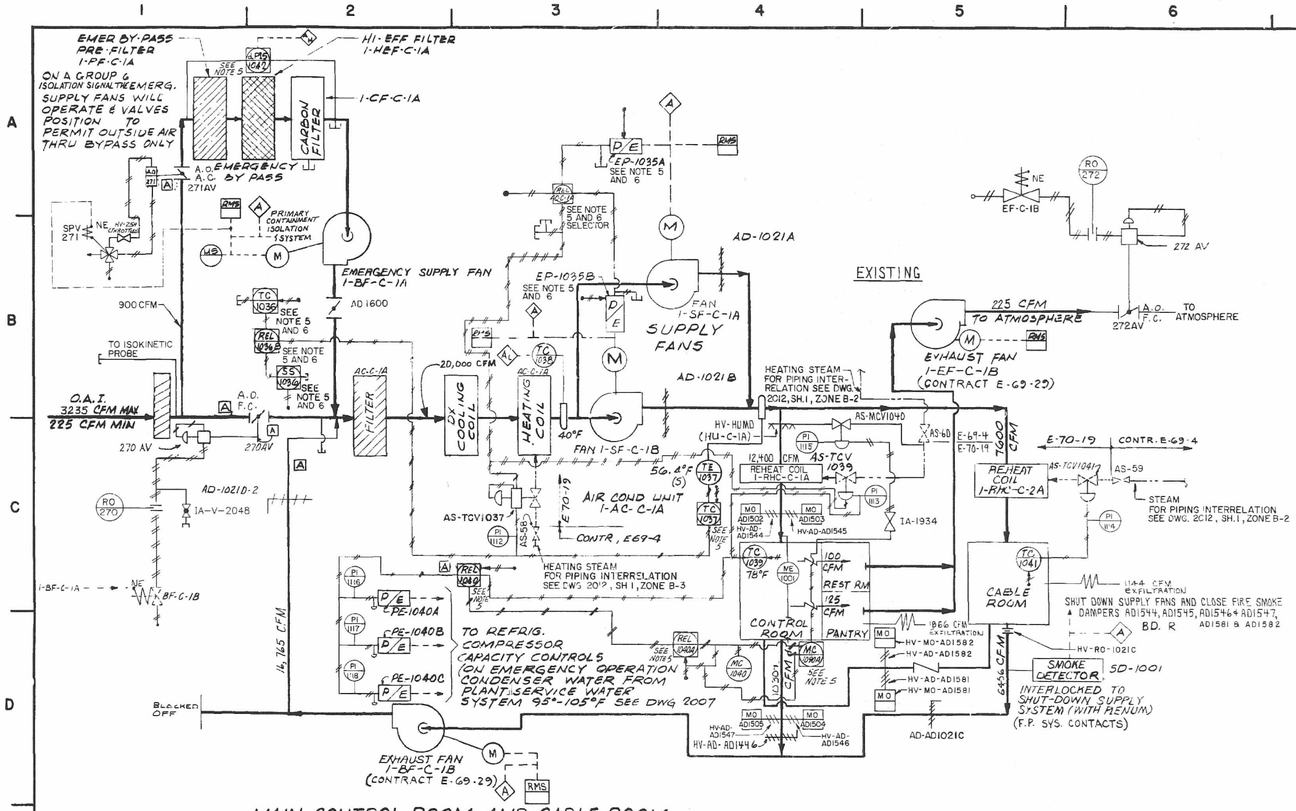

MAIN CONTROL ROOM AND CABLE ROOM
AIR CONDITIONING UNIT
1-AC-C-1A

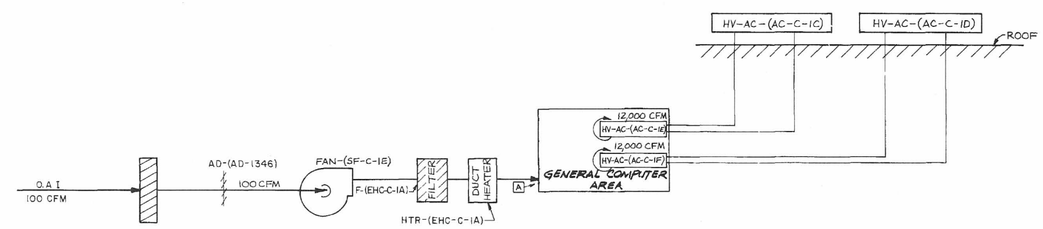

COMPUTER ROOM
AIR CONDITIONING UNITS

NON CONTROLLED PRINT
MAR 20 2007
N.P.P.D.. RIMS

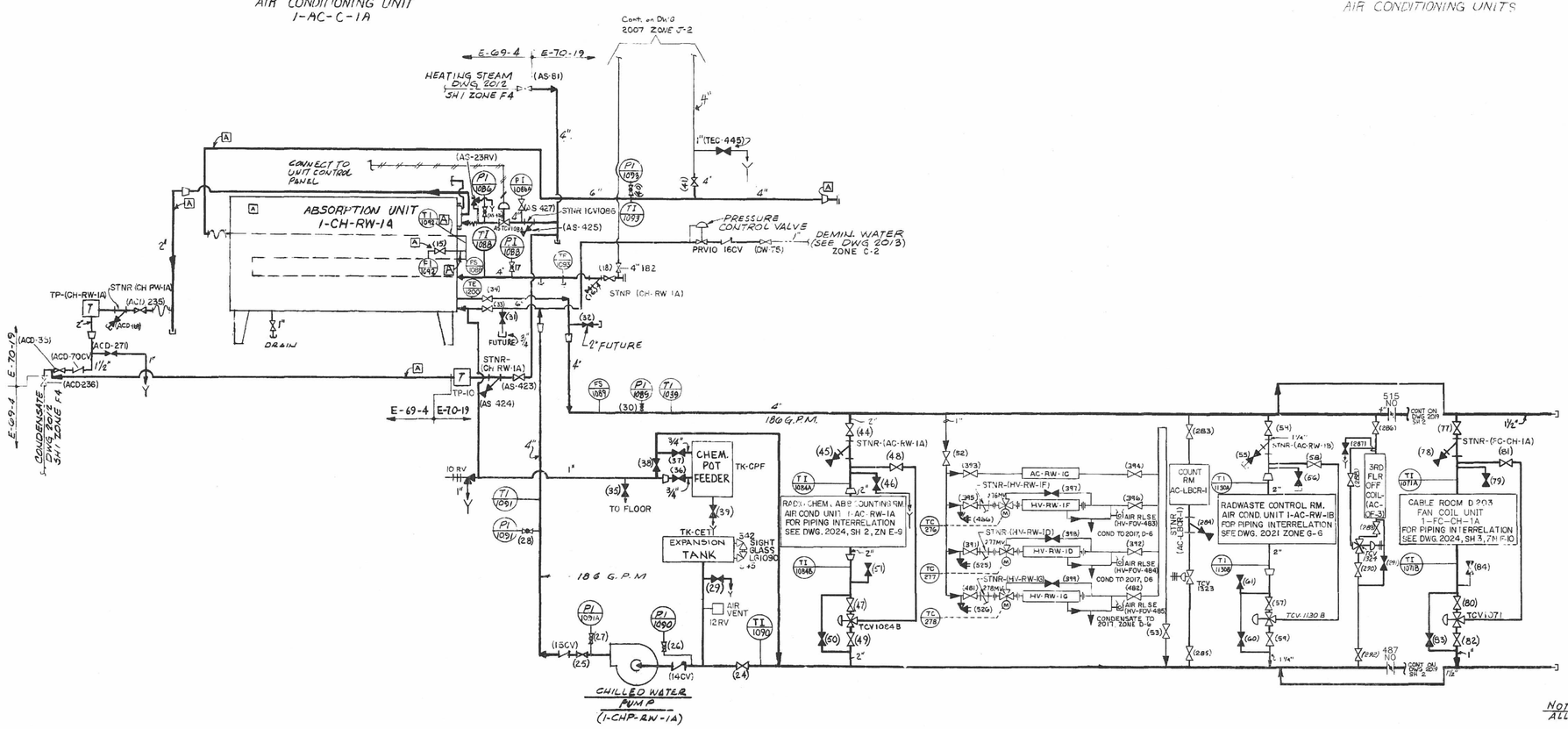

CHILLED WATER FLOW DIAGRAM

NOTE
1. FOR GENERAL NOTES REFER TO DWG. 2014 SH 2.
2. 3-WAY VALVES FOR FLOW CONTROL THRU EACH CHILLED WATER COIL MAY BE USED IN LIEU OF PRESSURE BY-PASS.
3. FLOW QUANTITIES ARE DESIGN FLOW QUANTITIES.
4. ALL VALVES ARE IN THE HV SYSTEM UNLESS OTHERWISE DESIGNATED.
5. THE DEVICES FOR AC-C-1A ARE LOCATED IN LRP-RACK-(LIR-AC-C-A) REF. HONEYWELL DWG. 932-71212 PI, SH. 2C.
6. TC-1036, REL-1036B, SS-1036, REL-AC-C-1A, EP-1035A, AND EP-1035B DEVICES SERVE NO CONTROL FUNCTION.

D-22

NOTE: ALL ITEMS MARKED THUS [A] ARE "AS BUILT" ITEMS

FOR PREVIOUS REVISIONS, SEE SUPERSEDED CARDS.

REVISIONS BY N.P.P.D.

NO.	REVISIONS	DFT	CKD	APP	DATE
N37	CED 6007315 (DCN 02-0091)	DLR	DLR	JEH	3/30/04
N38	EE 04-063 (DCN 04-2982)	KG	KG	RGA	12/28/04
N39	CED 6012480 (DCN 05-0438)	DLR	DLR	PER	3/29/05
N40	CR2005-03960 (DCN 05-0785)	KG	RGA	DLR	12/30/05

AS BUILT
454003607
SCAN/CADD DWG
DO NOT REVISE MANUALLY
CADD FILE: C0036642

BURNS AND ROE, INC.
ENGINEERS AND CONSTRUCTORS
NEW YORK, N. Y.

FLOW DIAGRAM
MAIN CONTROL RM.
CABLE RM. & COMPUTER RM.
HEATING, VENTILATING & AIRCOND.

CONSUMERS PUBLIC POWER DISTRICT
COOPER NUCLEAR STATION

DRAWN BY NARELL
TRACED BY
CHECKED BY HRT
APPROVED R. Edwards
CHIEF MECHANICAL ENGINEER
SQUAD LEADER
DATE 4/5/68
SCALE NONE
W.O. 2520
DWG. 2019 SH. 3
REV. N40