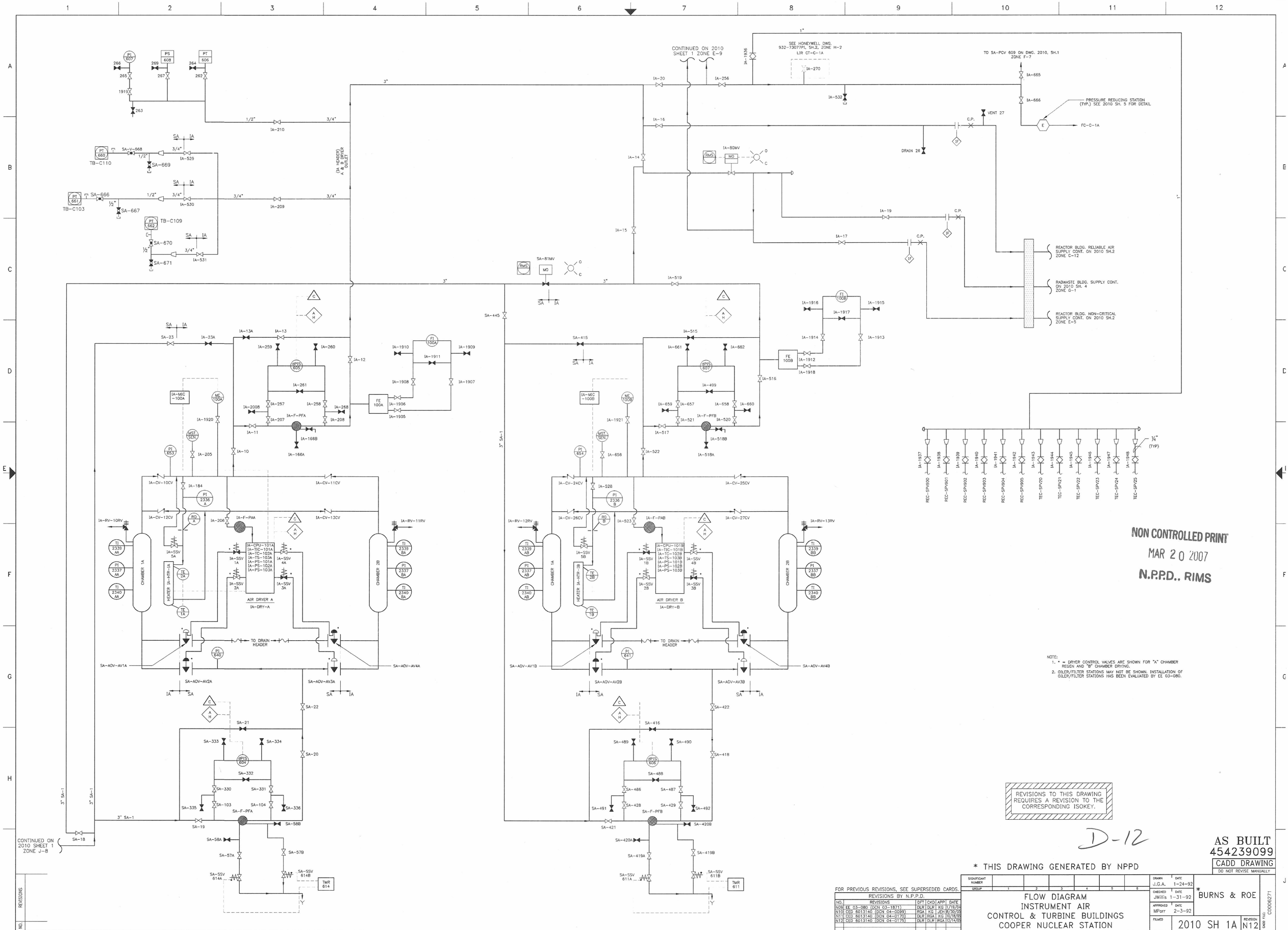
CONTINUED ON 2010 SHEET 1 ZONE E-9
SEE HONEYWELL DWG. 932-73077PI, SH.2, ZONE H-2 LIR CT-C-1A
TO SA-PCV 609 ON DWG. 2010, SH.1 ZONE F-7
PRESSURE REDUCING STATION (TYP.) SEE 2010 SH. 5 FOR DETAIL
FC-C-1A
VENT 27
DRAIN 26
REACTOR BLDG. RELIABLE AIR SUPPLY CONT. ON 2010 SH.2 ZONE C-12
RADWASTE BLDG. SUPPLY CONT. ON 2010 SH. 4 ZONE G-1
REACTOR BLDG. NON-CRITICAL SUPPLY CONT. ON 2010 SH.2 ZONE E-5
(IA MEMBER) A & B DRYER OUTLET
TB-C110
TB-C103
TB-C109
CHAMBER 1A
CHAMBER 2B
HEATER IA-HTR-1A
AIR DRYER A
IA-DRY-A
HEATER IA-HTR-1B
AIR DRYER B
IA-DRY-B
TO DRAIN HEADER
CONTINUED ON 2010 SHEET 1 ZONE J-8
NON CONTROLLED PRINT
MAR 20 2007
N.P.P.D.. RIMS
NOTE:
1. * = DRYER CONTROL VALVES ARE SHOWN FOR "A" CHAMBER REGEN AND "B" CHAMBER DRYING.
2. OILER/FILTER STATIONS MAY NOT BE SHOWN. INSTALLATION OF OILER/FILTER STATIONS HAS BEEN EVALUATED BY EE 03-080.
REVISIONS TO THIS DRAWING REQUIRES A REVISION TO THE CORRESPONDING ISOKEY.
D-12
AS BUILT
454239099
CADD DRAWING
DO NOT REVISE MANUALLY
* THIS DRAWING GENERATED BY NPPD
FOR PREVIOUS REVISIONS, SEE SUPERSEDED CARDS.
REVISIONS BY N.P.P.D.
NO. REVISIONS DFT CKD APP DATE
N09 EE 03-080 (DCN 03-1871) DLR DLR KG 7/19/04
N10 CED 6013140 (DCN 04-0099) RGA KG JEH 8/30/05
N11 CED 6013140 (DCN 04-0170) DLR RGA KG 10/18/05
N12 CED 6013140 (DCN 04-0175) DLR DLR RGA 12/14/05
SIGNIFICANT NUMBER
GROUP
FLOW DIAGRAM
INSTRUMENT AIR
CONTROL & TURBINE BUILDINGS
COOPER NUCLEAR STATION
DRAWN J.G.A. DATE 1-24-92
CHECKED JWillis DATE 1-31-92
APPROVED MPorr DATE 2-3-92
FILMED
* BURNS & ROE
2010 SH 1A
REVISION N12
CADD FILE: C0006271