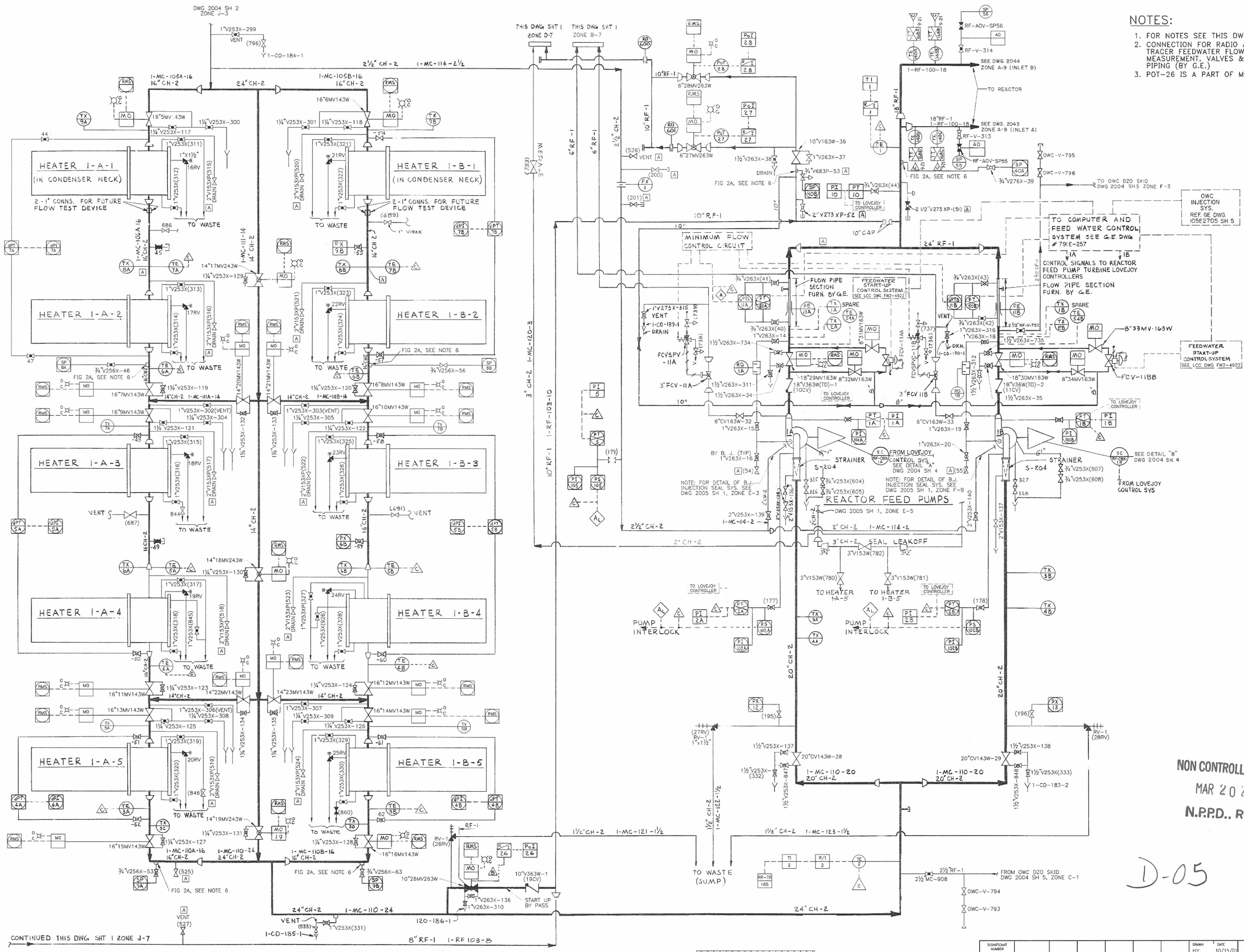

NOTES:

1. FOR NOTES SEE THIS DWG SH. 1
2. CONNECTION FOR RADIO ACTIVE TRACER FEEDWATER FLOW MEASUREMENT. VALVES & INSTRUMENT PIPING (BY G.E.)
3. POT-26 IS A PART OF MC-MO-26MV

NON CONTROLLED PRINT
MAR 20 2007
N.P.P.D., RIMS

D-05

454003584

AS BUILT

SCAN/CADD DWG
DO NOT REVISE MANUALLY

REVISIONS TO THIS DRAWING REQUIRES A REVISION TO THE CORRESPONDING ISOKEY.

FOR PREVIOUS REVISIONS, SEE SUPERSEDED CARDS.

REVISIONS BY N.P.P.D.

NO.	REVISIONS	DFT	CKD	APP	DATE
N42	DCR 3-40217 (DCN 01-1215)	HPY	RGA	KG	1/9/02
N43	CED 6007522 (DCN 01-0647)	RGA	DLR	KG	3/18/03
N44	EE 03-074 (DCN 03-1279)	DLR	DLR	KG	1/22/04
N45	CED 6016505 (DCN 05-1430)	KG	JGA	GLL	11/11/06
N46	CED 6016942 (DCN 05-1552)	DLR	DLR	DRB	11/12/06

SIGNIFICANT NUMBER
GROUP 1 2 3 4 5 6

FLOW DIAGRAM
CONDENSATE &
FEEDWATER SYSTEMS
COOPER NUCLEAR STATION

DRAWN HY. DATE 10/15/01
CHECKED DATE
APPROVED DATE
SEE SUPERSEDED CARDS
FILMED

BURNS & ROE

2004 SH 3 REVISION N46

CADD FILE: C0017900

NO. REVISIONS