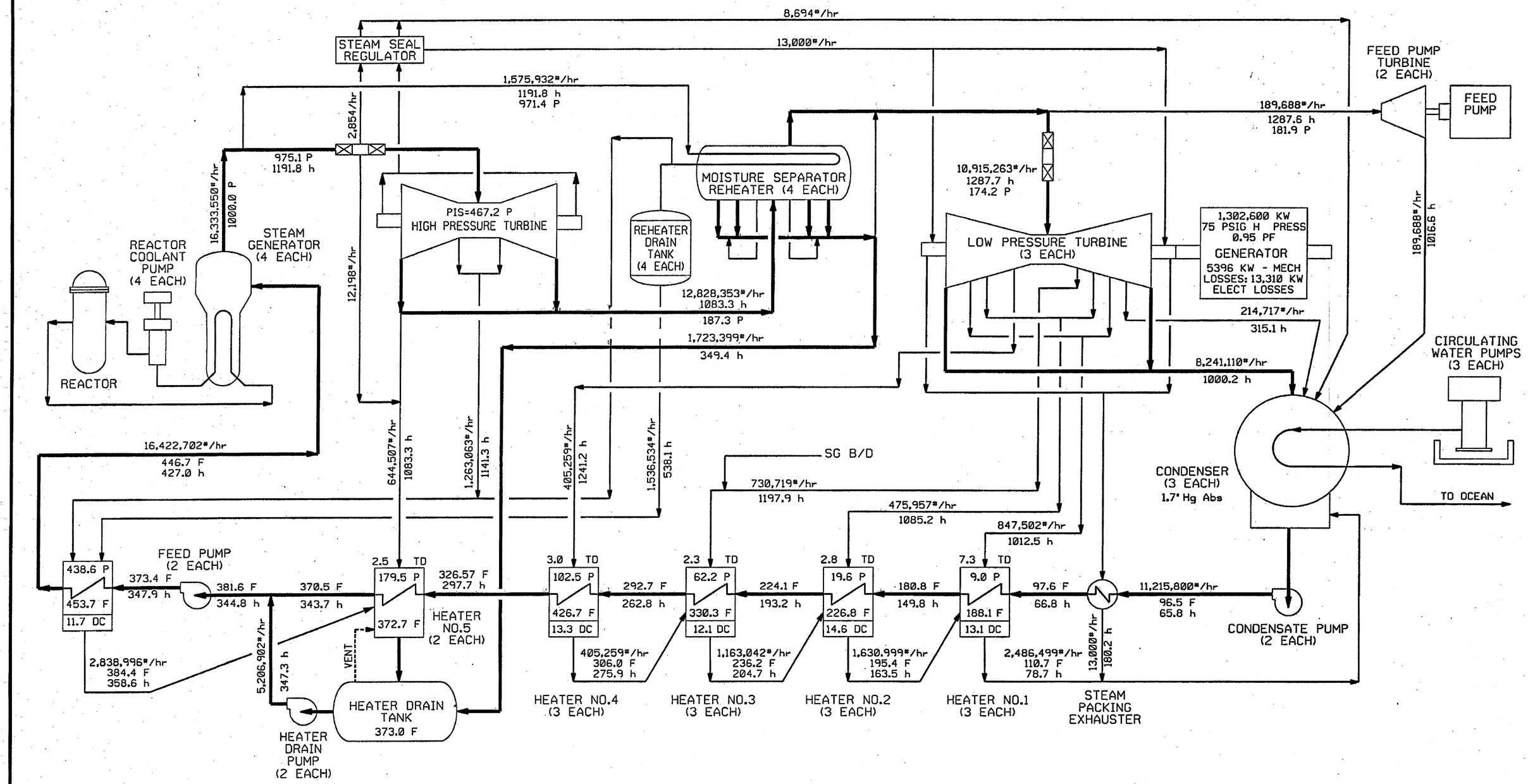

REV	DATE	DRWN	CHKD	CDE	SES	DESCRIPTION
4	10/25/06	KCS	JME	MBC	IAW	REDRAWN FOR MUR DCR 04-015 DCN 00 DCR 05-003 DCN 00
3	5/16/05	KCS	JME	MBC	IAW	REDRAWN FOR SPU

SEABROOK STATION

FPL ENERGY SEABROOK STATION

HEAT BALANCE
100 % LOAD

1-NHY-202116

\UPRATE\HEATBALANCE.DGN

10-24-06

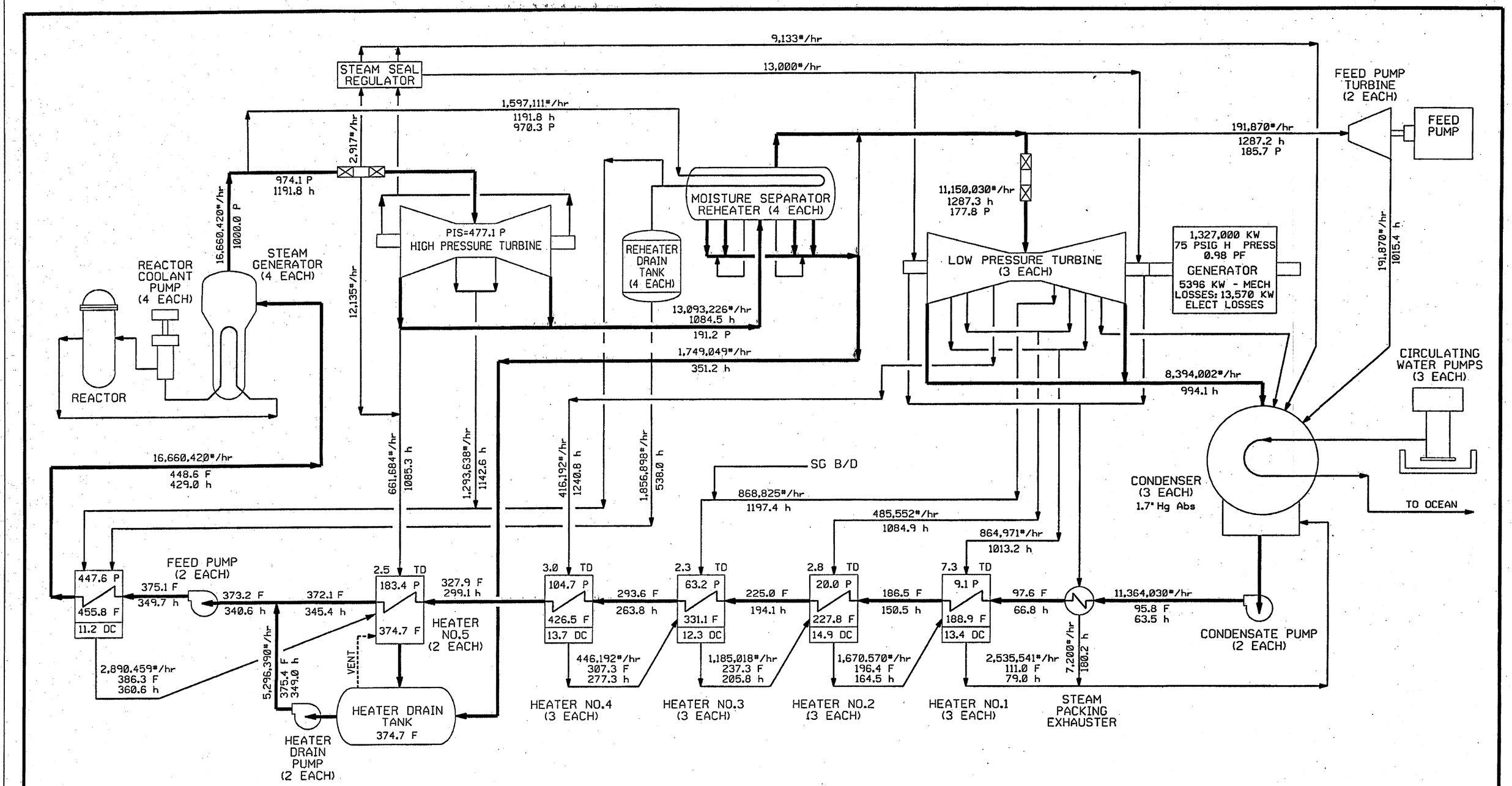

REV	DATE	DRWN	CHKD	CDE	SES	DESCRIPTION
2	10/25/06	KCS	[illegible]	[illegible]	[illegible]	REDRAWN FOR MUR DCR 05-013 DCN 00
1	5/16/05	KCS	JME	MDL	IAW	REDRAWN FOR SPU

SEABROOK STATION

FPL ENERGY SEABROOK STATION

HEAT BALANCE
VALVES WIDE OPEN

1-NHY-202115

\UPRATE\HEATBALANCE.DGN

10-25-06

PID- 1-HG-B20888

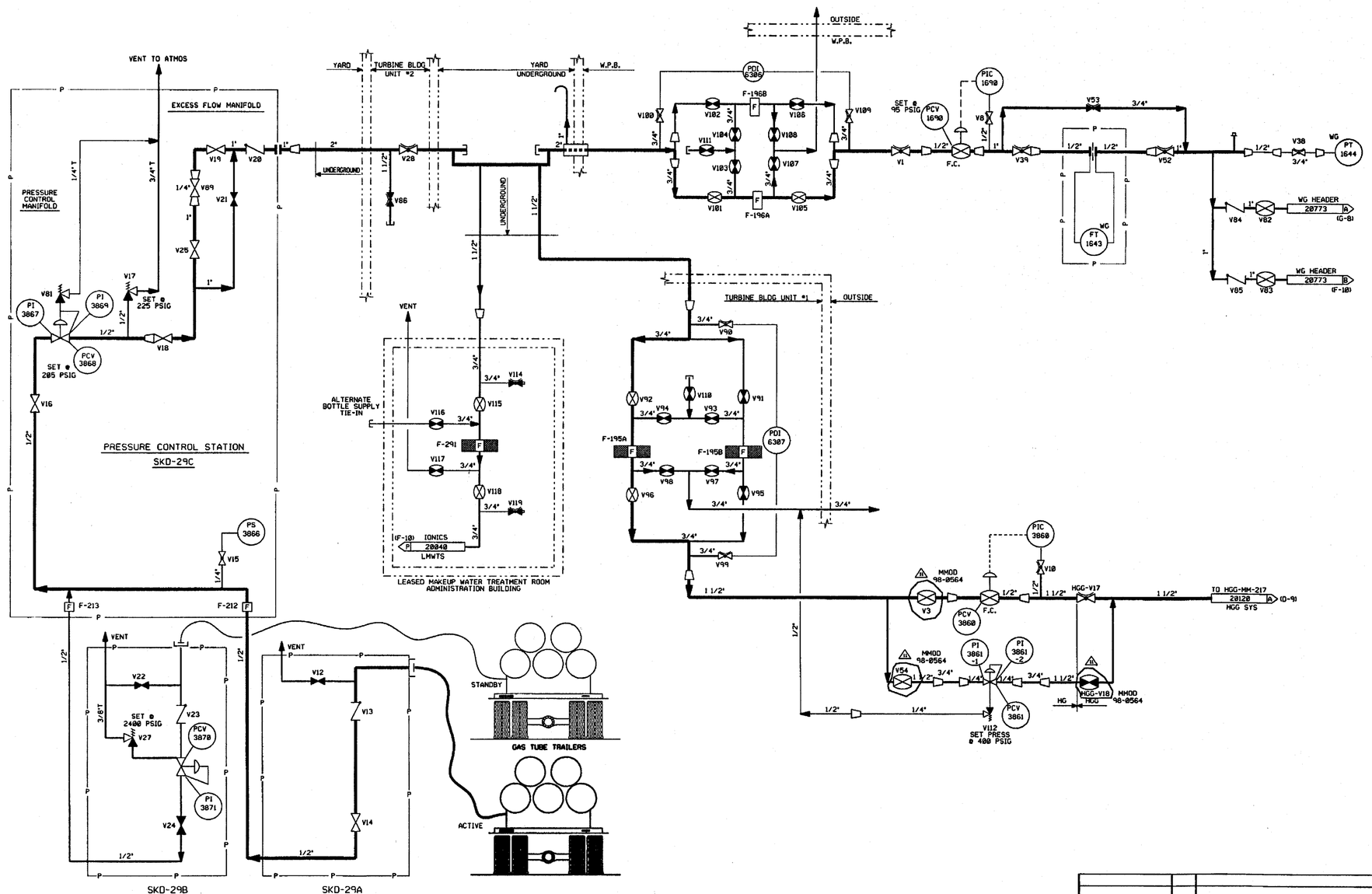

FOR P&ID REFERENCE DRAWINGS, SYMBOLS AND ABBREVIATIONS REFER TO DRAWINGS P&ID - LEGEND 1 AND P&ID - LEGEND 2

NOTES:
1. THE HG SYSTEM IS A ONE (1) DRAWING SYSTEM, AN OVERVIEW IS NOT REQUIRED.
2. ALL LINES, EQUIPMENT, COMPONENTS AND INSTRUMENTS HAVE SYSTEM PREFIX HG UNLESS NOTED.
3. ALL LINES, EQUIPMENT, COMPONENTS AND INSTRUMENTS ARE SAFETY CLASS NNS UNLESS NOTED OTHERWISE.
4. △-INDICATES REVISION LEVEL.
5. DELETED

REV	DATE	DSGN	DRWN	CHKD	CDE	SES	DESCRIPTION
11	7/27/99	RWS	—	BCS	DWS	VWS	INCORP MMOD 98-0564 DCN 00
10	6/02/98	DRL	—	BCS	MPW	VWS	INCORP MMOD 97-521 DCN 00
9	6/12/97	MPW	—	DWS	FAC	RRC	INCORP MMOD 96-531 DCN 00
8	8/3/94	DWS	—	BCL	MPW	WFZ	INCORP DCR 930031 CA#0, 4 & 7
7	10/9/91	MRB	FCB	DSB	APL	RWM	INCORP. DCR 86-227 CA16 AND DCR 89-67 CA01
6	2/15/91	DWS	JM	MRB	GPM	RSG	INCORP. DCR 86-227 CA08 EXCEPT CA06
5	12/20/89	MRB	FCB	PAL	APL	IW	INCORP. DCR 87-268 CA06. ADDED: SYS PREFIX PER NOTE 2.
4	2/2/89	MRB	JM	GPM	APL	GM	REVISED: V69 THRU V80 SYMBOL PER ECA 08/113687C, V21 SYMBOL PER UE & CP & ID 9763-F-805038, NOTE 3.
3	12/11/86	MAP	OPO	MPW	BCL	RRC	ADDED CONT REF LOCATIONS, DELETED NOTE 5, CHANGE ITEM PER ASBUILT CONDITION
2	9/26/86	JDM	DWS	MPW	BCL	RRC	RESOLVED CHANGE ITEM NO 2 PER ECA 19/118426A.
1	6/19/86	WC	MRB	JDM	JMS	RRC	INC. ECA 08/113687C, DR 94/418A ADDED CHG. ITEM 2 & 3 RESOLVED CHG. ITEM 1 BY ECA 08/113687C
0	02/06/86	DEE	WES	JDM	WFD	EWD	ISSUED FOR OPERATIONS & INCORP. ECA'S 19/107612A & 99/109978A

REF. DRAWING NO.	REV	TITLE
9763-F-615024	8	ADMIN. & SERV. BLDG. FIRST FLR. SHT 3
9763-F-615031	5	ADMIN. & SERV. BLDG. PLUMBING-GAS
FP-56242	2	HYD. PRESS RED. & FLOW CONTROL STATION
9763-F-805612	12	RADIOACTIVE GAS WASTE SYS. P&I D.
9763-F-805038	4	GAS SERVICE SYS. HYDROGEN P&I D.

North Atlantic Energy Service Corporation

SEABROOK STATION

HYDROGEN GAS SYSTEM

PID- 1-HG-B20888

04/06/99

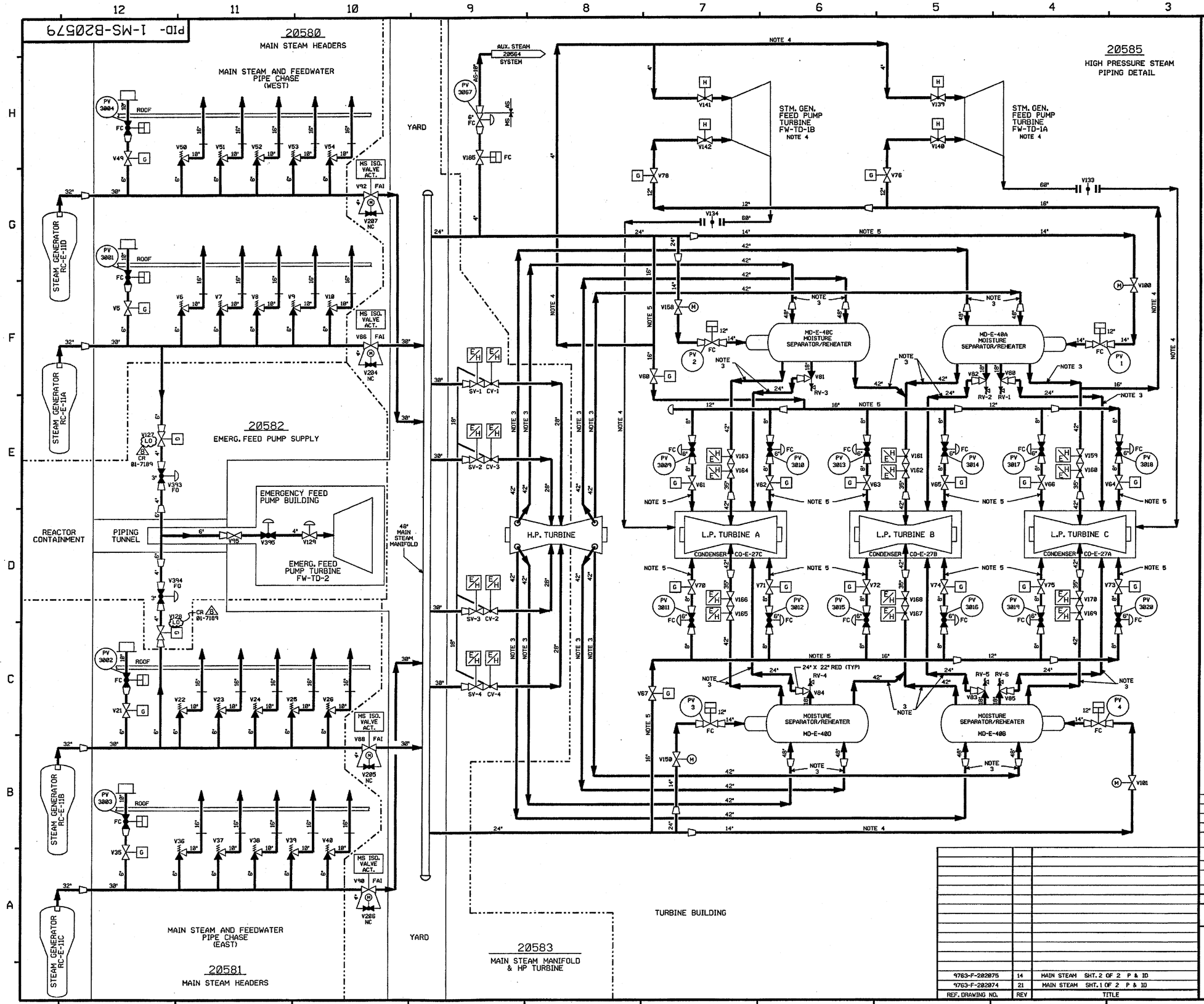

FOR P&ID REFERENCE DRAWINGS, SYMBOLS AND ABBREVIATIONS REFER TO DRAWINGS P&ID - LEGEND 1 AND P&ID - LEGEND 2

NOTES:

1.) WORK THIS DRAWING WITH DRAWINGS 20580 THROUGH 20588.
2.) ALL LINES, EQUIPMENT, COMPONENTS AND INSTRUMENTS HAVE SYSTEM PREFIX MS, UNLESS NOTED OTHERWISE.
3.) FOR LOW PRESSURE STEAM PIPING SEE DRAWING 20584.
4.) FOR HIGH PRESSURE STEAM PIPING SEE DRAWING 20585.
5.) FOR STEAM DUMP PIPING SEE DRAWING 20586.
6.) FOR MAIN STEAM DRAINS SEE DRAWING 20587.
7.) FOR MAIN STEAM MISC VENT AND DRAINS SEE DRAWING 20588.
8.) △ INDICATES REVISION LEVEL

REV	DATE	DSGN	DRWN	CHKD	CDE	SES	DESCRIPTION
8	7/23/02	JM	—	MPW	—	BCS	INCORP. CR 01-07189-01
7	5/14/02	MPW	—	JM	—	MAP	INCORP. DCR 01-017 DCN 00
6	6/2/98	DRL	—	BCS	MPW	VWS	INCORP. MMOD 97-521 DCN 02
5	10/9/91	GPM	FCB	JM	MRB	RWM	INCORP. DCR 90-32 CA0
4	10/24/90	MRB	FCB	JM	APL	BCL	INCORP MMOD 90-601 CA00 ADDED: P&ID LEGEND REF NOTE
3	12/22/89	MRB	MRB	MPW	BCL	WFD	REVISED TO SHOW VALVES V393, V394 & V395
2	1/28/88	MPW	RMC	GPM	BCL	RRC	INCORPORATED DCR 86-549
1	1/27/87	MPW	DWS	WRD	BCL	RRC	ADDED NOTE 7, REVISED PER LATEST SYSTEM DRAWINGS.
0	2/5/86	TAK	GJS	DWS	ASK	WFD	ISSUED FOR OPERATIONS

REF. DRAWING NO.	REV	TITLE
9763-F-202075	14	MAIN STEAM SHT. 2 OF 2 P & ID
9763-F-202074	21	MAIN STEAM SHT. 1 OF 2 P & ID

North Atlantic Energy Service Corporation

SEABROOK STATION

MAIN STEAM SYSTEM OVERVIEW

PID- 1-MS-B20579

07/26/02

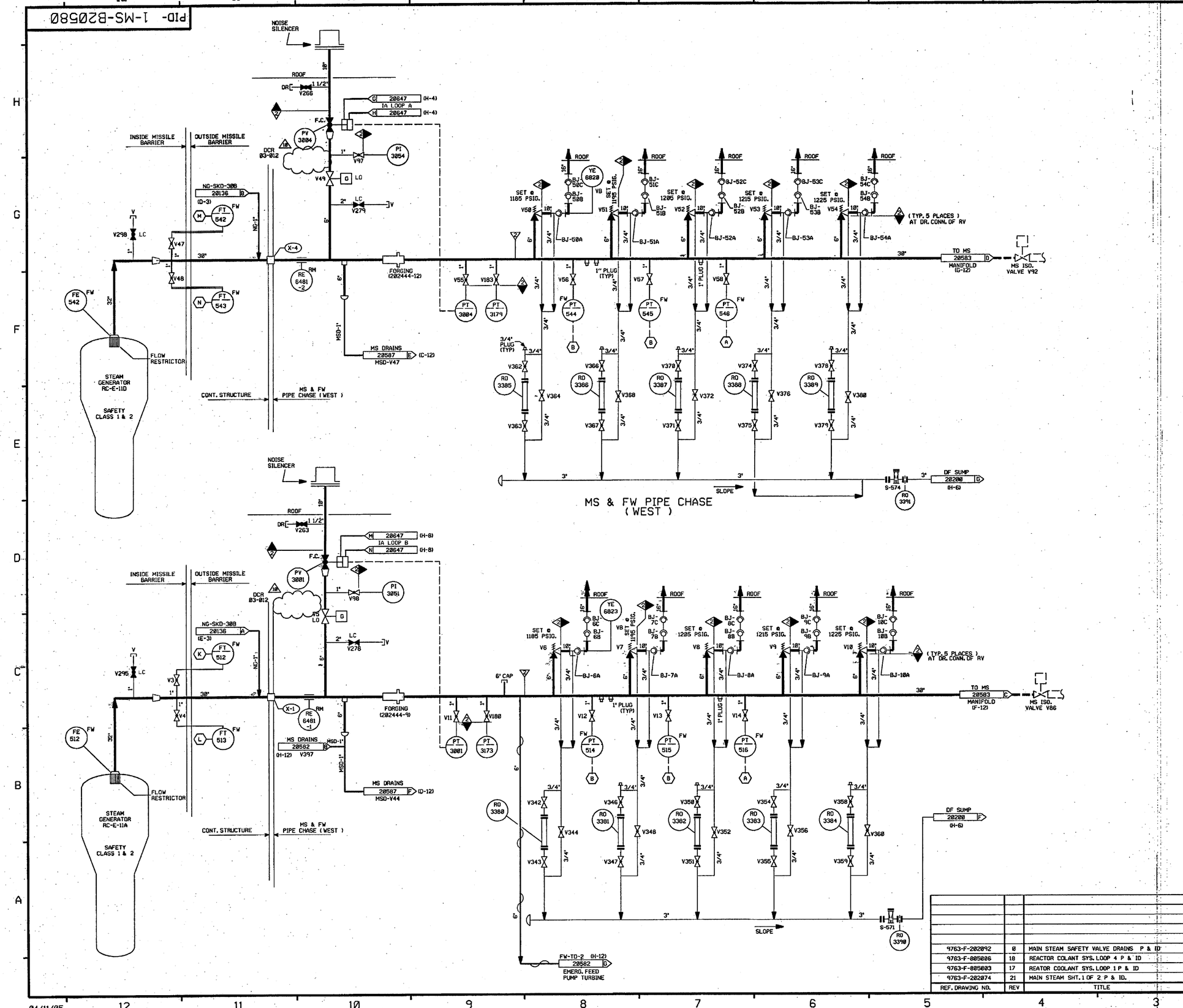

FOR P&ID REFERENCE DRAWINGS, SYMBOLS AND ABBREVIATIONS REFER TO DRAWINGS P&ID - LEGEND 1 AND P&ID - LEGEND 2

NOTES:

1. WORK THIS DRAWING WITH DRAWINGS 20579 & 20581 THRU 20587.
2. ALL LINES, EQUIPMENT, COMPONENTS AND INSTRUMENTS HAVE SYSTEM PREFIX MS, UNLESS NOTED OTHERWISE.
3. VENTS, DRAINS AND TEST CONNECTION CODE BREAKS ARE AT THE DOWN STREAM END OF THE OUTER ISOLATION VALVE PER 1-NHY-805111, UNLESS NOTED OTHERWISE.
4. INSTRUMENT REFERENCES:
   - (A) STEAM PRESSURE PROTECTION SYSTEM
   - (B) STEAM PRESSURE MISMATCH SYSTEM
   - (K) TO 1-FW-LT-501, LT-551 & LT-4310 ON DWG. 1-FW-20686
   - (L) TO 1-FW-LT-519 ON DWG. 1-FW-20686.
   - (M) TO 1-FW-LT-4340, LT-584 & LT-547 ON DWG. 1-FW-20686.
   - (N) TO 1-FW-LT-549 ON DWG. 1-FW-20686
5. △ INDICATES REVISION LEVEL

PORTIONS OF THIS DRAWING ARE

NUCLEAR SAFETY RELATED

REV	DATE	DSGN	CHKD	CE	DESCRIPTION
10	11-13-05	BCS	JW	SFB	INCORP DCR 03-012 DCN-00
9	4/27/99	RWS	DWS	HWM	INCORP MMOD 98 8521 DCN 00
8	11/3/95	BCL	WCL	GPM	INCORP DCR 95-32 CA-0, DCR 95-29 CA-0
7	11/29/94	DWS	BCL	MHD	INCORP MMOD 930545 CA-0
6	4/28/92	MRB	DWS	RRB	INCORP. MMOD 91-515 CA0
5	10/9/91	GPM	MRB	RRC	INCORP. DCR 90-32 CA0 REVISED NOTE 3 DELETED NNS-1 SYMBOL, ASME CLASS BREAK PER NOTE 3
4	2/2/90	MRB	WCL	IW	INCORPORATED DCR 87-178 CA02
3	4/20/88	MPW	DWS	RRC	ADDED: BALL JOINT NUMBERS, REFERENCE DWG NOTE, NOTE 5, REF. COORD. AND LINE CONT. TO DF SUMP. DELETED: LINE SPECS & CODE CLASS BREAK PER NOTE 3.
2	9/22/86	JDM	GPBCL	RRC	REVISED TO SHOW CONNECTIONS & VALVES FOR FT'S FROM OUTSIDE TO INSIDE MISSLE BARRIER, ADDED TAG NOS. FOR FORGINGS, CORRECTED BALL JOINT SYMBOLS, REVISED TO REFLECT CORRECT TIE-IN SEQUENCE PER PIPING ERECTION ISO F-414011.
1	6/18/86	JDM	JMS	RRC	GENERAL REVISION PER DE&C UPDATE INCORP. ECA 85/100821A
0	2/5/86	TAK	ASK	WFD	ISSUED FOR OPERATIONS

REF. DRAWING NO.	REV	TITLE
9763-F-202092	0	MAIN STEAM SAFETY VALVE DRAINS P & ID
9763-F-805026	18	REACTOR COLANT SYS. LOOP 4 P & ID
9763-F-805003	17	REATOR COOLANT SYS. LOOP 1 P & ID
9763-F-202074	21	MAIN STEAM SHT. 1 OF 2 P & ID.

FPL ENERGY Seabrook Station

MAIN STEAM SYSTEM
MAIN STEAM HEADERS
DETAIL

PID- 1-MS-B20580

04/11/05

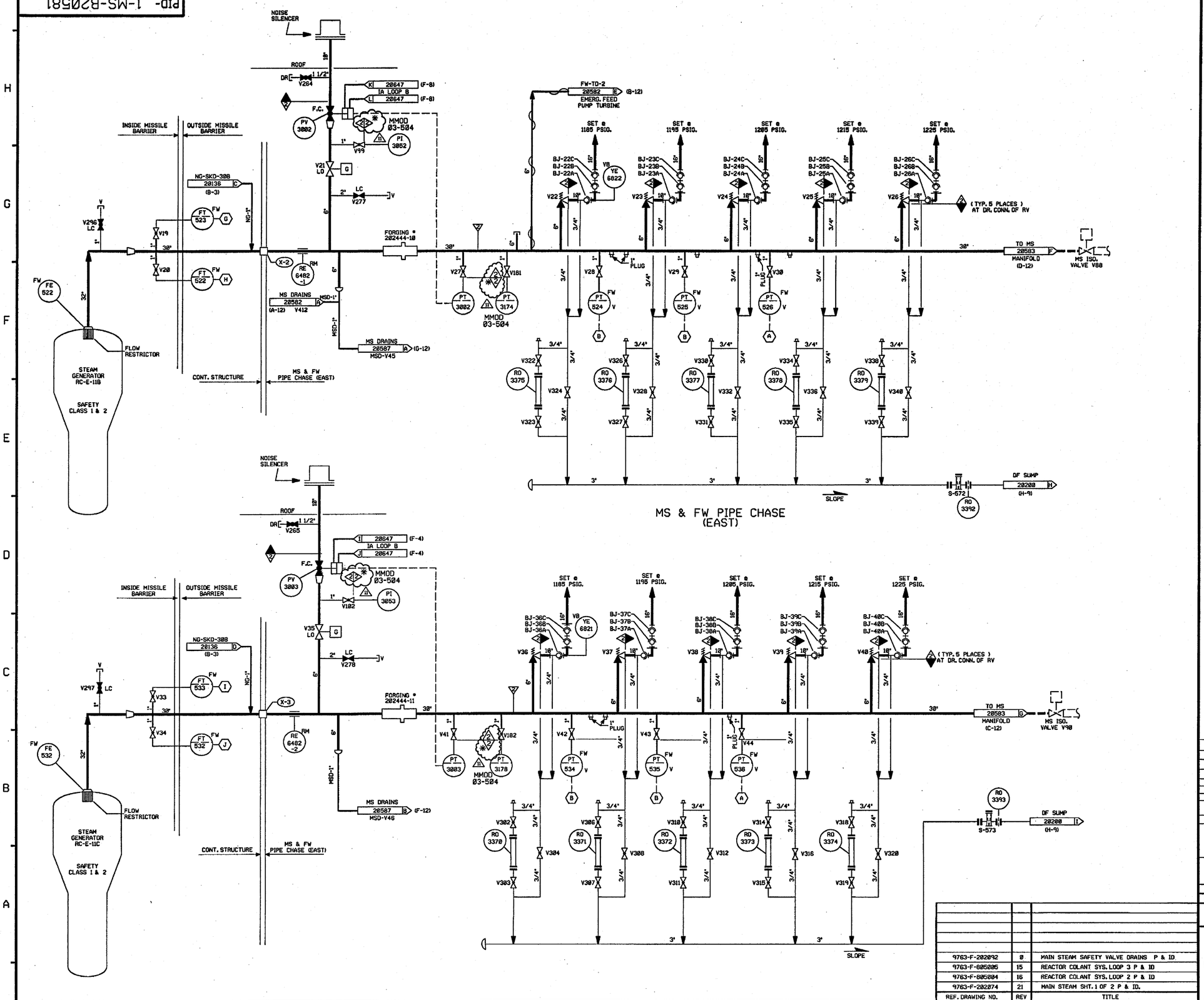

FOR P&ID REFERENCE DRAWINGS, SYMBOLS AND ABBREVIATIONS REFER TO DRAWINGS P&ID - LEGEND 1 AND P&ID - LEGEND 2

NOTES:

1. WORK THIS DRAWING WITH DRAWINGS 20579, 20580, 20582 THRU 20587.
2. ALL LINES, EQUIPMENT, COMPONENTS AND INSTRUMENTS HAVE SYSTEM PREFIX MS, UNLESS NOTED OTHERWISE.
3. VENTS, DRAINS AND TEST CONNECTION CODE BREAKS ARE AT THE DOWN STREAM END OF THE OUTER ISOLATION VALVE PER 1-NHY-805111 UNLESS NOTED OTHERWISE.
4. INSTRUMENT REFERENCES:
   - (A) STEAM PRESSURE PROTECTION SYSTEM
   - (B) STEAM PRESSURE MISMATCH SYSTEM
   - (G) TO 1-FW-LT-552, LT-502 & LT-4320 ON DWG. 1-FW-20686
   - (H) TO 1-FW-LT-529 ON DWG. 1-FW-20686.
   - (I) TO 1-FW-LT-4330, LT-538 & LT-503 ON DWG. 1-FW-20686.
   - (J) TO 1-FW-LT-539, LT-4330 ON DWG. 1-FW-20686
5. △ INDICATES REVISION LEVEL.

PORTIONS OF THIS DRAWING ARE

NUCLEAR SAFETY RELATED

REV	DATE	DSGN	CHKD	CE	DESCRIPTION
11	7-31-06	BCS	JM	RRB	INCORP MMOD 03-504 DCN-00
10	4-12-05	BCS	JM	RRB	INCORP DCR 03-12 DCN-00
9	4-27-99	RWS	JM	HWM	INCORP MMOD 98 0521 DCN 00
8	7/30/97	MPW	BCS	VWS	INCORP MMOD 967-550 DCN 01
7	11/3/95	BCL	MPW	GRM	INCORP. DCR 95-32 CA0, DCR 95-29 CA-0
6	11/29/94	DWS	MPW	MHO	INCORP MMOD 930545 CA#0
5	4/14/92	MRB	DWS	JEV	INCORP. MMOD 91-515 CA0
4	10/9/91	GPM	JM	RWM	INCORP. DCR 90-32 CA0 REVISED NOTE 3
3	2/2/90	MRB	APL	IW	INCORP DCR 87-178 CA 02.
2	9/8/88	MPW	GPM	RRC	REVISED: NOTE 3 ADDED: P&ID LEGEND NOTE, BALL JOINT NUMBERS PER UE & C P & ID 202074, NOTE 5, REF. CONT. COORD. AND CONT. OF DRAIN LINES TO DF SUMP. DELETED: CL BREAK
1	9/26/86	MRJ	BCL	RRC	INCORP ECA 19/3783A, 08/1137128 & 02/687C. REVISED BUILDING BOUNDRY, CONTINUATION REFERENCES & ADDED FORGING TAG NUMBERS.
0	2/5/86	TAK	DWS	WFD	ISSUED FOR OPERATIONS

REF. DRAWING NO.	REV	TITLE
9763-F-202092	0	MAIN STEAM SAFETY VALVE DRAINS P & ID
9763-F-805005	15	REACTOR COLANT SYS. LOOP 3 P & ID
9763-F-805004	16	REACTOR COLANT SYS. LOOP 2 P & ID
9763-F-202074	21	MAIN STEAM SHT. 1 OF 2 P & ID.

FPL ENERGY Seabrook Station

MAIN STEAM SYSTEM
MAIN STEAM HEADERS
DETAIL

PID- 1-MS-B20581

07/20/06

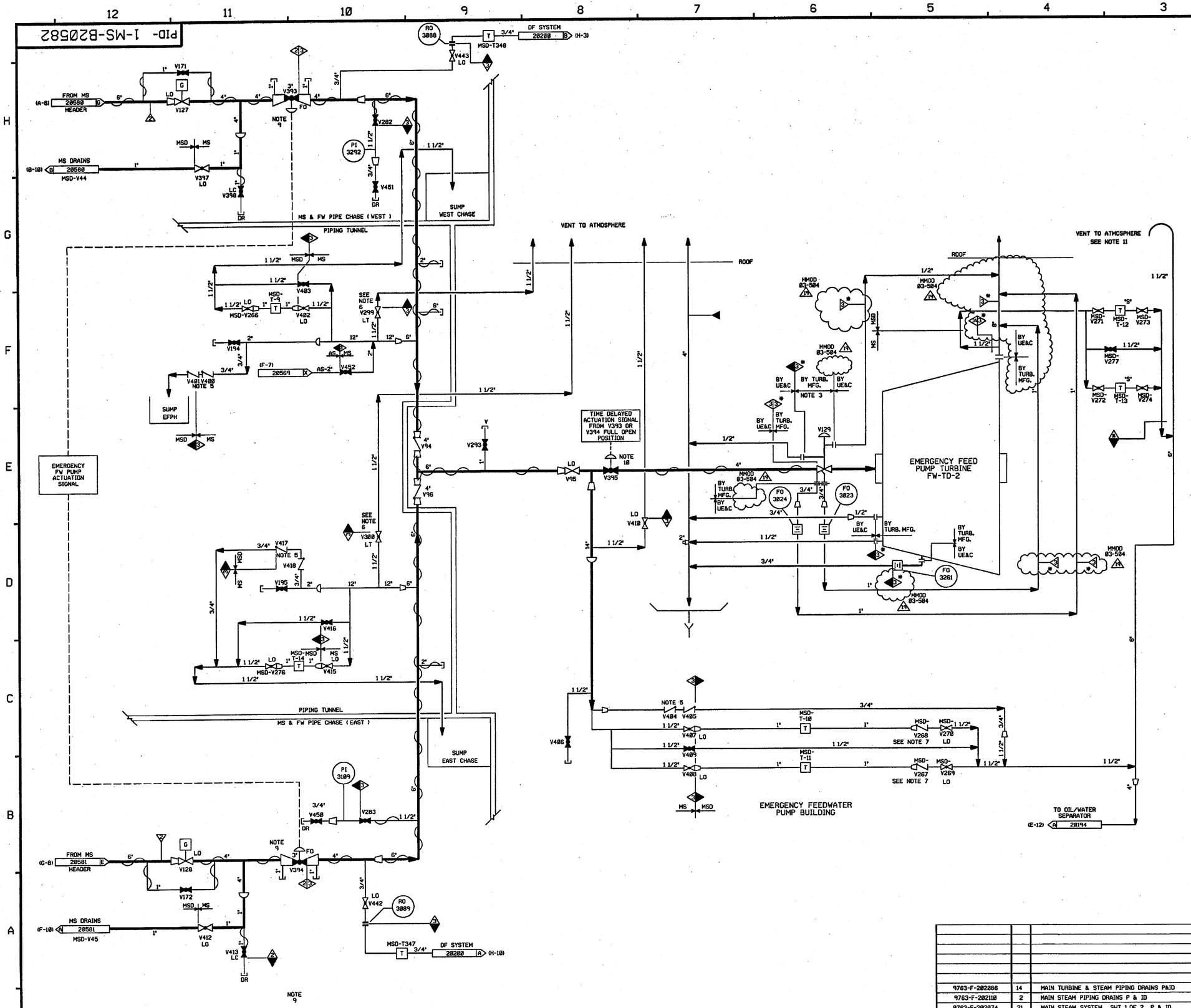

FOR P&ID REFERENCE DRAWINGS, SYMBOLS AND ABBREVIATIONS REFER TO DRAWINGS P&ID - LEGEND 1 AND P&ID - LEGEND 2

NOTES:

1. WORK THIS DRAWING WITH DRAWINGS 20579, 20580, 20581 & 20583 THROUGH 20587.
2. ALL LINES, EQUIPMENT, COMPONENTS AND INSTRUMENTS HAVE SYSTEM PREFIX "MS", UNLESS NOTED OTHERWISE.
3. VENTS, DRAINS AND TEST CONNECTION CODE BREAKS ARE AT THE DOWNSTREAM END OF THE OUTER ISOLATION VALVE PER 1-NHY-005111, UNLESS NOTED OTHERWISE.
4. DELETED
5. CHECK VALVES V417, V418, V401, V400, V404, & V405 ARE TO BE INSTALLED OPPOSITE FROM DIRECTION OF FLOW IN VERTICAL RUN OF PIPE SUCH THAT THEY HANG OPEN AND ALLOW DRAINAGE WHEN SYSTEM IS DEPRESSURIZED, THUS ENSURING CONDENSATE DRAINAGE & PREVENTING WATER HAMMER.
6. VALVES V299 & V300 ARE THROTTLED ¼ OPEN FROM FULL CLOSED POSITION.
7. THE INTERNALS FROM VALVES V267 & V268 HAVE BEEN REMOVED.
8. ⚠3 * INDICATES ANS SAFETY CLASS 3, NOT ASME CODE CLASS 3. (MANUFACTURE'S STANDARDS)
9. FOR INSTRUMENT AIR DETAILS SEE PID IA-B28647.
10. FOR INSTRUMENT AIR DETAILS SEE PID IA-B28644.
11. EFP TURBINE VENT & DRAIN LINES ARE CONTAINED IN A HEATED ENCLOSURE PER MMOD 03-505.

PORTIONS OF THIS DRAWING ARE

NUCLEAR SAFETY RELATED

REV	DATE	DSGN	CHKD	CE	DESCRIPTION
19	7-31-06	BCS	JM	ECB	INCORP. MMOD 03-504 DCN 00
18	10/8/03	BCS	MPW	MAP	INCORP. DCR 00-021 DCN 00
17	9/10/03	JM	BCS	MAP	INCORP. MMOD 03-0505 DCN 00
16	10/22/02	JM	MPW	BCS	INCORP. CR 01-05172 REV 00
15	5/14/02	MPW	JM	MAP	INCORP. DCR 01-017 DCN 00
14	11/22/00	BCS	MPW	DJM	REINCORP. MMOD 98-599 DCN-00
13	6/3/98	BCS	MPW	RRB	INCORP. MMOD 98-599 DCN-00
12	6/3/98	BCS	MPW	VWS	REINCORP. MMOD 96-550 DCN 02
11	8/18/97	MPW	BCS	VWS	INCORP. MMOD 96-550 DCN 02
10	6/20/97	DWS	MPW	BAW	INCORP DCR 970004 DCN*00
9	11/29/95	MPW	BCS	GRM	INCORP. DCR 94-43 CA0
8	10/29/92	BCL	MRB	RSG	INCORP. MMOD 92-502 CA0, 02
7	4/20/92	MRB	BCL	RRB	INCORP. MMOD 91-515 CA0
6	10/9/91	GPM	JM	RWM	INCORP. DCR 90-32 CA0 REVISED: NOTE 3 ADDED: CONT COORD DELETED: ASME CLASS BREAK PER NOTE 3
5	6/4/90	MRB	JM	GRM	INCORPORATED MMOD 90-530 CA0
4	2/9/90	MRB	APL	RRC	INCORP DCR 89-41 CA12 REVISED NOTE 3
3	6/1/87	MRJ	DS	RRC	IDENT SUMP LOCATIONS, ADDED SYSTEM & CLASS BREAKS, INCORP'D DCR 87-212
2	9/22/86	MRJ	MAP	RRC	REVISED BLDG. BOUNDRY ADDED CONTINUATION REF'S. V293 WAS GATE VLV. INCORP ECA 08/802859B. REV'D PER LATEST UE&C P&ID.
1	7/2/86	OPO II	BCL	RRC	REVISED PER ECA 08/113712B AND 08/117428A
0	2/5/86	TAK	DWS	WFD	ISSUED FOR OPERATIONS

REF. DRAWING NO.	REV	TITLE
9763-F-202086	14	MAIN TURBINE & STEAM PIPING DRAINS P&ID
9763-F-202110	2	MAIN STEAM PIPING DRAINS P & ID
9763-F-202074	21	MAIN STEAM SYSTEM SHT.1 OF 2 P & ID

FPL ENERGY Seabrook Station

MAIN STEAM SYSTEM
EMERGENCY FEEDWATER
PUMP SUPPLY
DETAIL

PID- 1-MS-B20582

7/24/06

PID- 1-MS-B20583

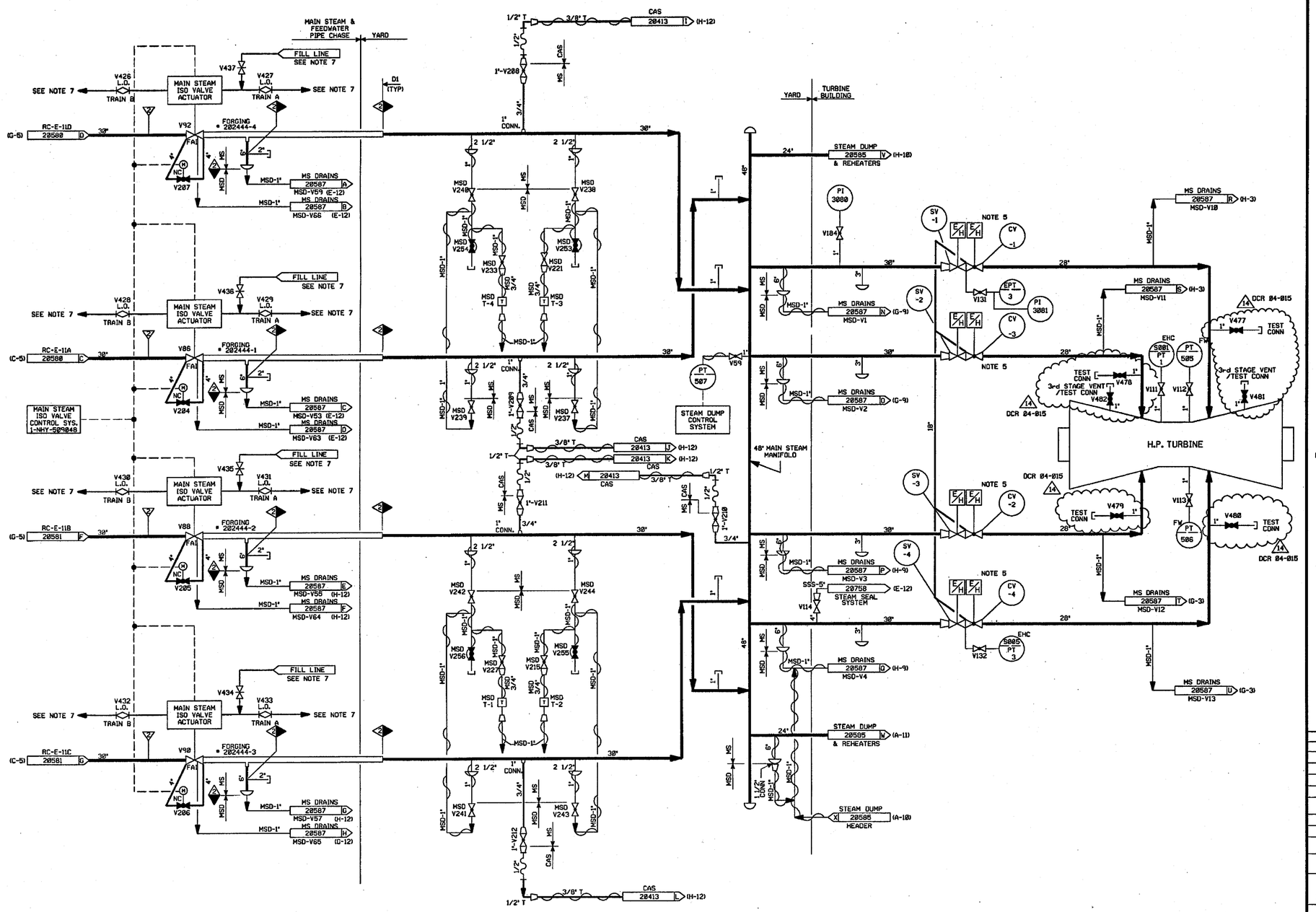

FOR P&ID REFERENCE DRAWINGS, SYMBOLS AND ABBREVIATIONS REFER TO DRAWINGS P&ID-LEGEND 1 AND P&ID-LEGEND 2.

PORTIONS OF THIS DRAWING ARE

NUCLEAR SAFETY RELATED

NOTES:

1. WORK THIS DRAWING WITH DRAWINGS 20579 THRU 20582 & 20584 THRU 20587.
2. ALL LINES, EQUIPMENT, COMPONENTS AND INSTRUMENTS HAVE SYSTEM PREFIX MS. UNLESS NOTED OTHERWISE.
3. ALL LINES, EQUIPMENT, COMPONENTS AND INSTRUMENTS ARE SAFETY CLASS NNS, UNLESS NOTED OTHERWISE.
4. DELETED
5. ABOVE SEAT DRAINS ON BOTH TURBINE STOP VALVES & TURBINE CONTROL VALVES ARE SHOWN ON DRAWING B20587.
6. △ INDICATES REVISION LEVEL
7. TO HYDRAULIC SYSTEM SEE FP23003 SHT 9 & 13 ITEMS 2-31,3-31 & 2-7.

REV	DATE	DSGN	CHKD	CE	DESCRIPTION
14	10-14-06	BCS	JWL	RRB	INCORP DCR 84-015 DCN-00, 01
13	12-23-04	JM	BCS	RRB	INCORP CR 04-12622 REV.0
12	9/7/04	JM	BCS	RRB	INCORP MSE 03-111, REV.0
11	6/2/98	DRL	BCS	VWS	INCORP MMOD 97-521 DCN 02
10	8/18/97	MPW	BCS	VWS	INCORP MMOD 96-550 DCN 01
9	11/19/95	BCL	MPW	MPW	INCORP MMOD 95-523 CA0
8	1/21/92	MRB	BCL	RRC	INCORP. MMOD 91-511 CA01 INCORP. MMOD 90-633 CA01
7	10/29/90	MRB	DSB	BCL	INCORP MMOD 90-601 CA00
6	6/18/90	MRB	HP	IW	INCORP MMOD 90-609 CA 0
5	1/28/88	MPW	GPM	RRC	INCORP. DCR 87-714 & DCR 86-549 REVISED: NOTE 3
4	5/8/87	GPM	DWS	VWS	ADDED HYDRAULIC SHUT OFF VALVES & NOTE 7 PER FP23003.
3	4/22/87	GPM	DWS	VWS	ADDED CONTROL LINE TO MSIV CONTROL SYSTEM PER UE&C CONTROL LOOP DIAGRAMS. REVISED PIPING TO REFLECT AS-INSTALLED CONDITIONS.
2	10/9/86	MRJ	MAP	RRC	INCORP ECA 19/109999A & 00/116467A AND 19/110327A. ADDED CONT REF. COOR LOC. NOTE 6 AND P&ID LEGEND NOTE. DELETED NOTE 4. ADDED VALVE SIZES PER UE&C P&ID & F.P. REV. TO REF. BLOCK.
1	6/23/86	OPO	JDM/TAK	RRC	ADDED SYSTEM DESIGN TO 2" MSD LINES INCORPORATED ECA 99/113920A
0	2/5/86	TAK	DWS	WFD	ISSUED FOR OPERATIONS

REF. DRAWING NO.	REV	TITLE
FP-70320	3	MAIN STEAM ISO VALVE CONTROL SYS.
FP-20166	5	42" CROSS-AROUND PIPING LAYOUT SHT.1
9763-F-202075	14	MAIN STEAM SYS. SHT. 2 OF 2 P & ID.
9763-F-202074	21	MAIN STEAM SYS. SHT. 1 OF 2 P & ID.

FPL ENERGY Seabrook Station

MAIN STEAM SYSTEM
MAIN STEAM MANIFOLD
& H.P. TURBINE PIPING
DETAIL

PID- 1-MS-B20583

10/10/06

PID:20584.DGN

PID- 1-MS-B20584

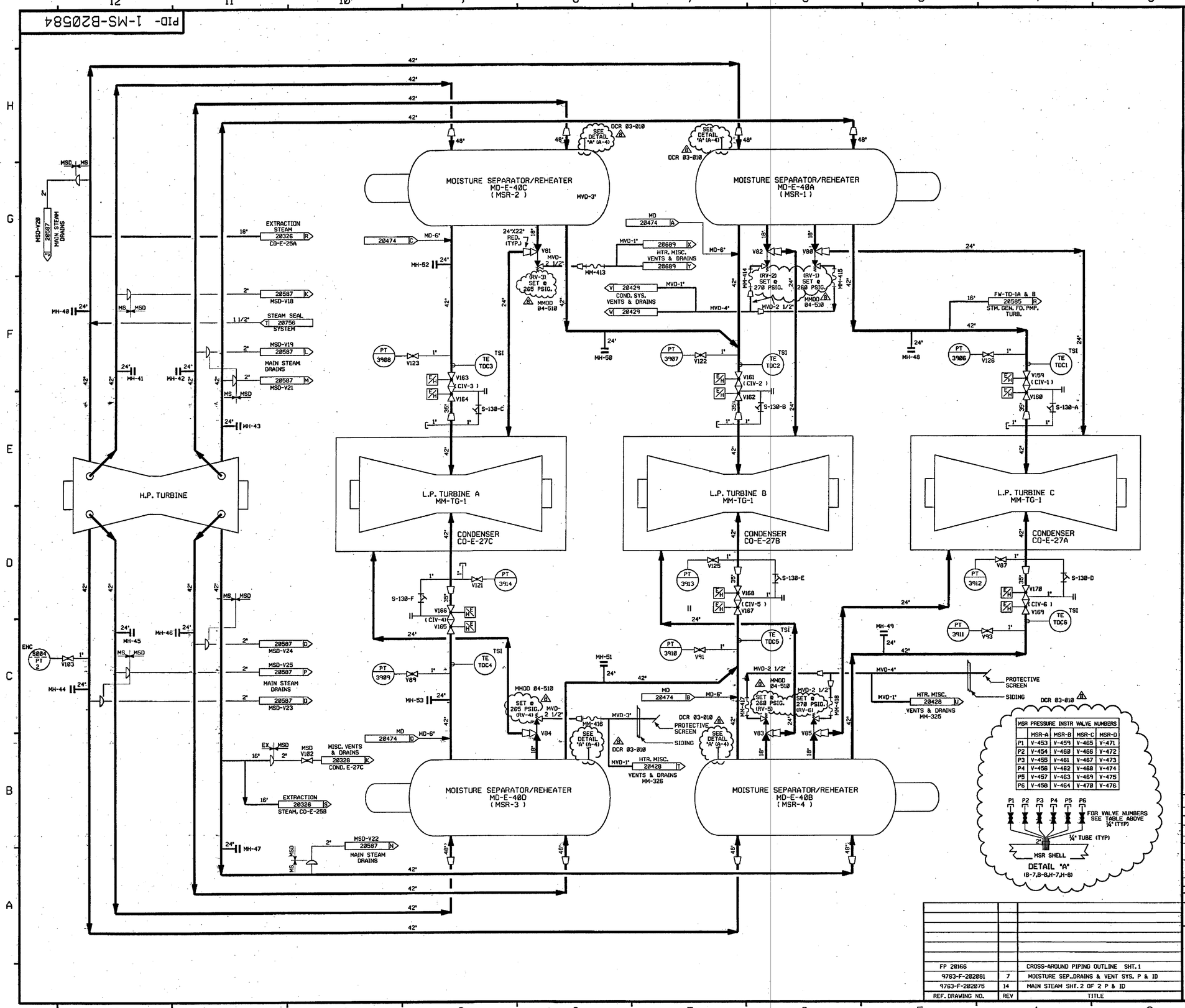

FOR P&ID REFERENCE DRAWINGS, SYMBOLS AND ABBREVIATIONS REFER TO DRAWINGS P&ID - LEGEND 1 AND P&ID - LEGEND 2 △8

NOTES:

1. WORK THIS DRAWING WITH DRAWINGS 20579 THRU 20583 & 20585 THRU 20587.
2. ALL LINES, EQUIPMENT, COMPONENTS AND INSTRUMENTS HAVE SYSTEM PREFIX MS, UNLESS NOTED OTHERWISE.
3. ALL LINES, EQUIPMENT, COMPONENTS AND INSTRUMENTS ARE SAFETY CLASS NNS, NON-SEISMIC, CATEGORY I UNLESS NOTED OTHERWISE.
4. △ INDICATES REVISION LEVEL

REV	DATE	DSGN	CHKD	CE	DESCRIPTION
8	4-8-05	BCS	JM	RRB	INCORP MMOD 04-510 DCN-00, DCR 03-010 DCN-00, 02 ADDED LEGEND REF NOTE.
7	2/23/03	BCS	JM	RRB	INCORP CR 01-09401 REV 00
6	1/7/03	JM	MPW	BCS	INCORP CR 00-01067 REV 00
5	5/3/99	DWS	BCS	SD	INCORP MMOD 970818 DCN#00
4	3/21/95	MRB	BCL	DAS	INCORP. DCR 92-004 CA0
3	5/8/92	MRB	MPW	BCL	INCORP. MMOD 91-511 CA0,CA1 REV NOTE 3 PER ENG DESIGN STD. 37180 SEC 3.0
2	9/17/86	PAL	MAP	RRC	REVISED TO INCORP FP 21702 & 20166 (DETAILS OF GE CROSS AROUND PIPING) ADDED CONTINUATION REF. ADDED NOTE 4
1	6/18/86	BLL	DWS	RRC	ADDED CONTINUATIONS
0	2/5/86	TAK	DWS	WFD	ISSUED FOR OPERATIONS

REF. DRAWING NO.	REV	TITLE
FP 20166		CROSS-AROUND PIPING OUTLINE SHT. 1
9763-F-202081	7	MOISTURE SEP.DRAINS & VENT SYS. P & ID
9763-F-202075	14	MAIN STEAM SHT. 2 OF 2 P & ID

FPL ENERGY Seabrook Station

MAIN STEAM SYSTEM
LOW PRESSURE STEAM PIPING
DETAIL

PID- 1-MS-B20584

04/11/05

PID- 1-MS-B20585

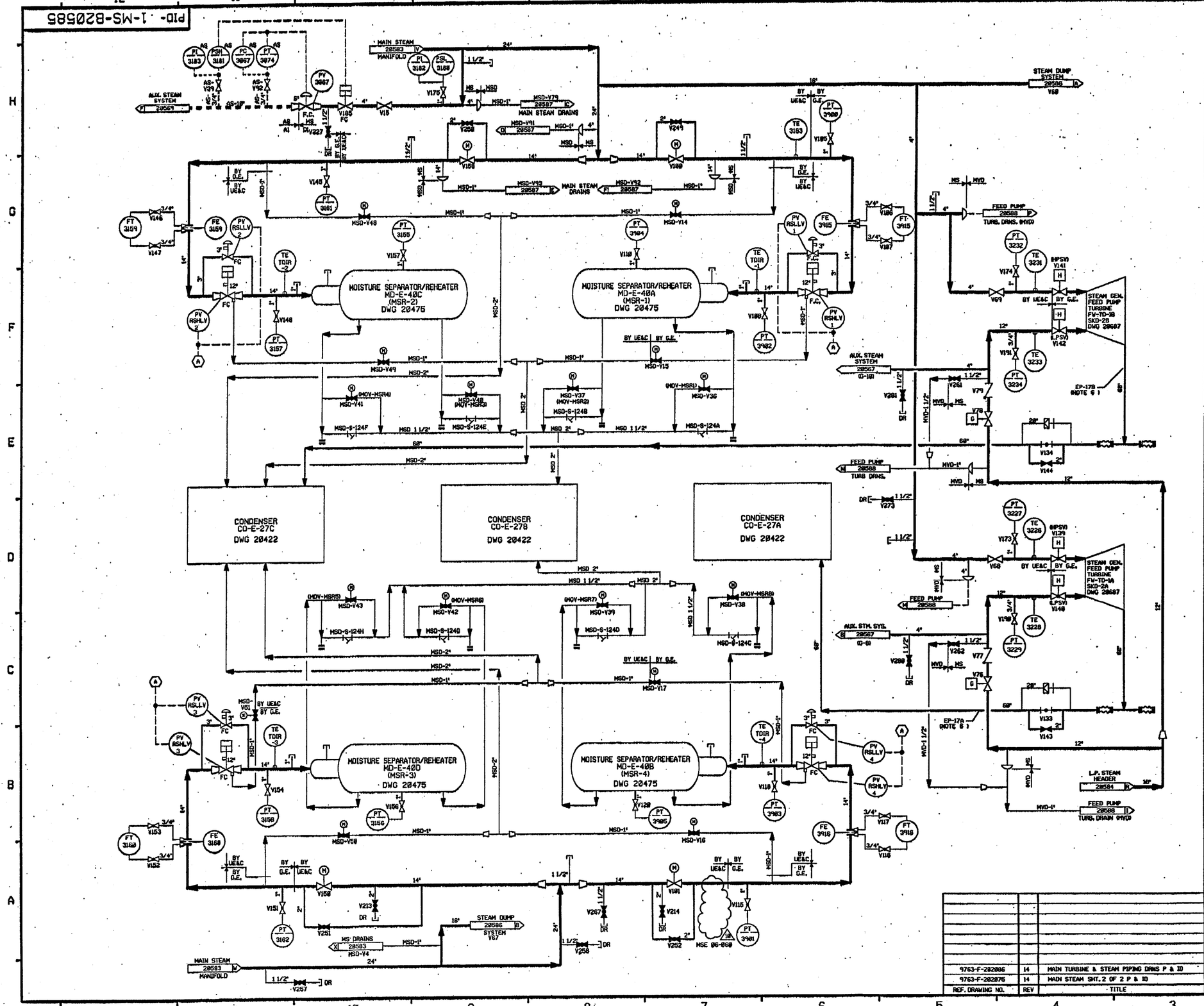

NOTES:

1. WORK THIS DRAWING WITH DRAWINGS 28579 THRU 28584 & 28586 AND 28587.
2. ALL LINES, EQUIPMENT, COMPONENTS AND INSTRUMENTS HAVE SYSTEM PREFIX MS, UNLESS NOTED OTHERWISE.
3. ALL LINES, EQUIPMENT, COMPONENTS AND INSTRUMENTS ARE SAFETY CLASS NNS, NON-SEISMIC, CATEGORY I UNLESS NOTED OTHERWISE.
4. △ INDICATES REVISION LEVEL.
5. INSTRUMENT REFERENCES
   (A) VALVES CONTROLLED AS FUNCTION OF TURBINE LOAD & REHEAT SYSTEM PRESSURE.
6. 1-MS-EP-17A AND 17B CONSIST OF THE ENTIRE EXHAUST ASSEMBLY, (INCLUDING EXPANSION JOINTS, DUCT WORK AND RUPTURE DISCS) FROM THE FEED PUMP TURBINE TO THE CONDENSER. (REF. FP 21421)

REV	DATE	DSGN	CHKD	CE	DESCRIPTION
10	12/15/06	BCS	[illegible]	[illegible]	INCORP. MSE 06-060 REV. 00
9	11/2/04	BCS	JH	RRB	INCORP. CR 04-11828 REV. 0
8	10/14/03	BCS	MPW	SAK	INCORP. MMOD 02-544 DCN-0
7	11/19/95	BCL	MPW	MPW	INCORP. MMOD 95-523 CA0
6	3/11/94	MRB	BCL	GRM	INCORP. MMOD 92-053 CA01
5	11/16/92	MRB	BCL	IM	INCORP. DCR 92-004 CA0
4	5/8/92	MRB	MPW	BCL	INCORP. MMOD 91-513 CA0
3	10/24/90	MRB	DSB	BCL	INCORP. MMOD 90-031 CA00 REVISED, NOTE 3 PER MOV ENG DESIGN STANDARD 97108 SECT. 3.8 AND MSP-V36 PER LEAK PRO 29388 AND VALVE LIST. ADD DWG REF INFO.
2	9/12/86	MRJ	MAP	RRC	REVISED PER PIPING CRITICAL ISO'S MS-1814-00.A & MS-1814-07.A REVISED CONTINUATION REF-5, ADDED NOTE 4.
1	5/24/86	DPD	JDM	RRC	ADDED PIPING CONFIGURATION AT MD-E-40A, B, C & D. ADDED CONT. DWG MJ48262. APPROVED CAQ ITEM #1 PER 282875 REV. 14
0	12/05/86	TAK	DMS	WFD	ISSUED FOR OPERATIONS

REF. DRAWING NO.	REV	TITLE
9763-F-282866	14	MAIN TURBINE & STEAM PIPING DRNS P & ID
9763-F-282875	14	MAIN STEAM SHT. 2 OF 2 P & ID

FPL ENERGY Seabrook Station

MAIN STEAM SYSTEM
HIGH PRESSURE STEAM PIPING
DETAIL

PID- 1-MS-B20585

12/15/06

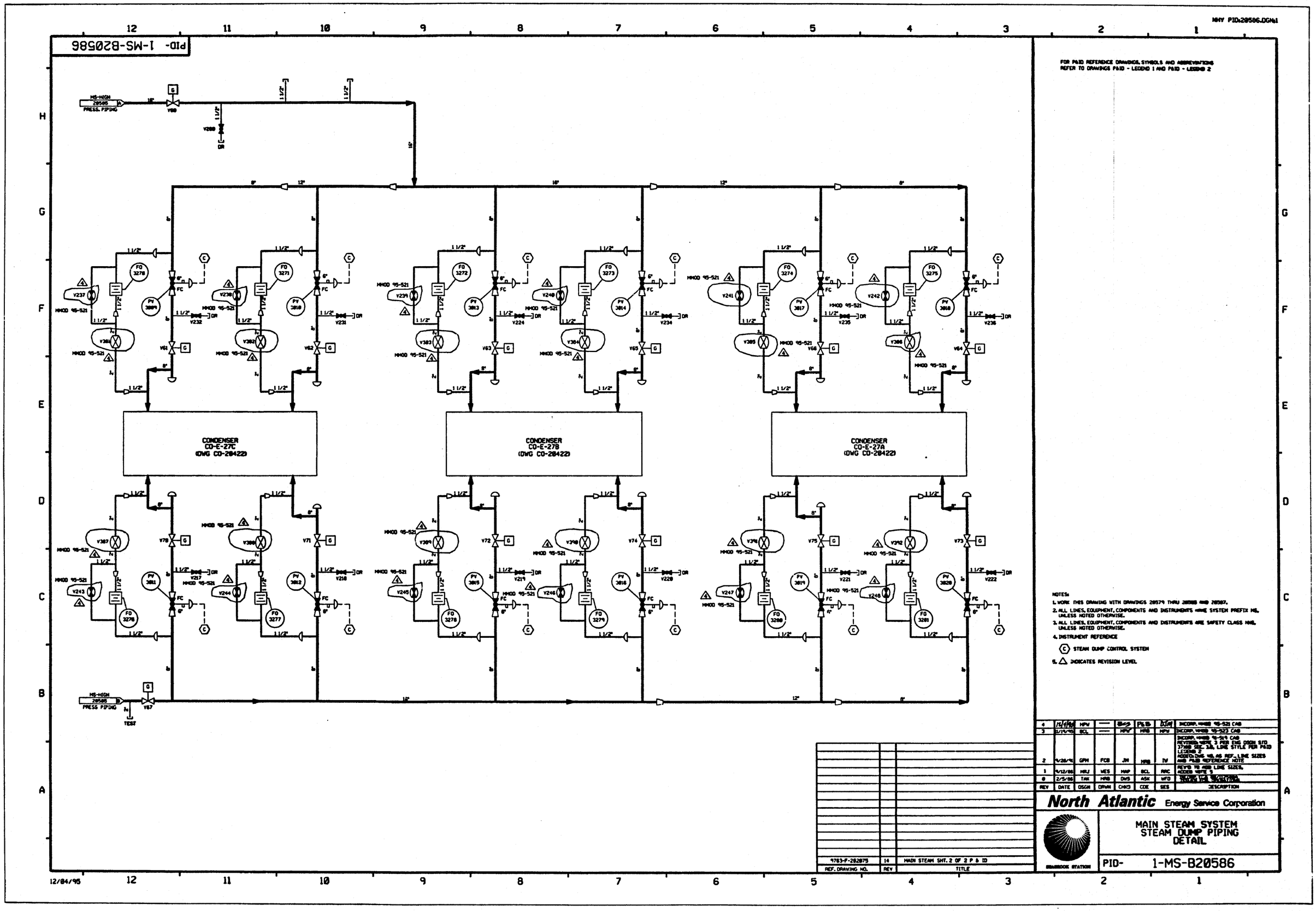

FOR P&ID REFERENCE DRAWINGS, SYMBOLS AND ABBREVIATIONS REFER TO DRAWINGS P&ID - LEGEND 1 AND P&ID - LEGEND 2

NOTES:

1. WORK THIS DRAWING WITH DRAWINGS 20579 THRU 20585 AND 20587.
2. ALL LINES, EQUIPMENT, COMPONENTS AND INSTRUMENTS HAVE SYSTEM PREFIX MS, UNLESS NOTED OTHERWISE.
3. ALL LINES, EQUIPMENT, COMPONENTS AND INSTRUMENTS ARE SAFETY CLASS NNS, UNLESS NOTED OTHERWISE.
4. INSTRUMENT REFERENCE
   (C) STEAM DUMP CONTROL SYSTEM
5. △ INDICATES REVISION LEVEL

REV	DATE	DSGN	DRWN	CHKD	CDE	SES	DESCRIPTION
4	12/4/95	MPW	—	BCS	P&B	DJM	INCORP. MMOD 95-521 CAB
3	11/19/95	BCL	—	MPW	MRB	MPW	INCORP. MMOD 95-523 CAB
2	9/28/91	GPM	FCB	JM	MRB	IW	INCORP. MMOD 91-519 CAB REVISED NOTE 3 PER ENG DSGN STD 37100 SEC. 3.8, LINE STYLE PER P&ID LEGEND 2 ADDED DWG NO. AS REF., LINE SIZES AND P&ID REFERENCE NOTE
1	9/12/86	MRJ	WES	MAP	BCL	RRC	REV'D TO ADD LINE SIZES, ADDED NOTE 5
0	2/5/86	TAK	MRB	DWS	ASK	WFD	INCORP. CAB 86/1125085 ADDED THE DESCRIPTION

North Atlantic Energy Service Corporation

SEABROOK STATION

MAIN STEAM SYSTEM
STEAM DUMP PIPING
DETAIL

PID- 1-MS-B20586

REF. DRAWING NO.	REV	TITLE
9763-F-202075	14	MAIN STEAM SHT. 2 OF 2 P & ID

12/04/95

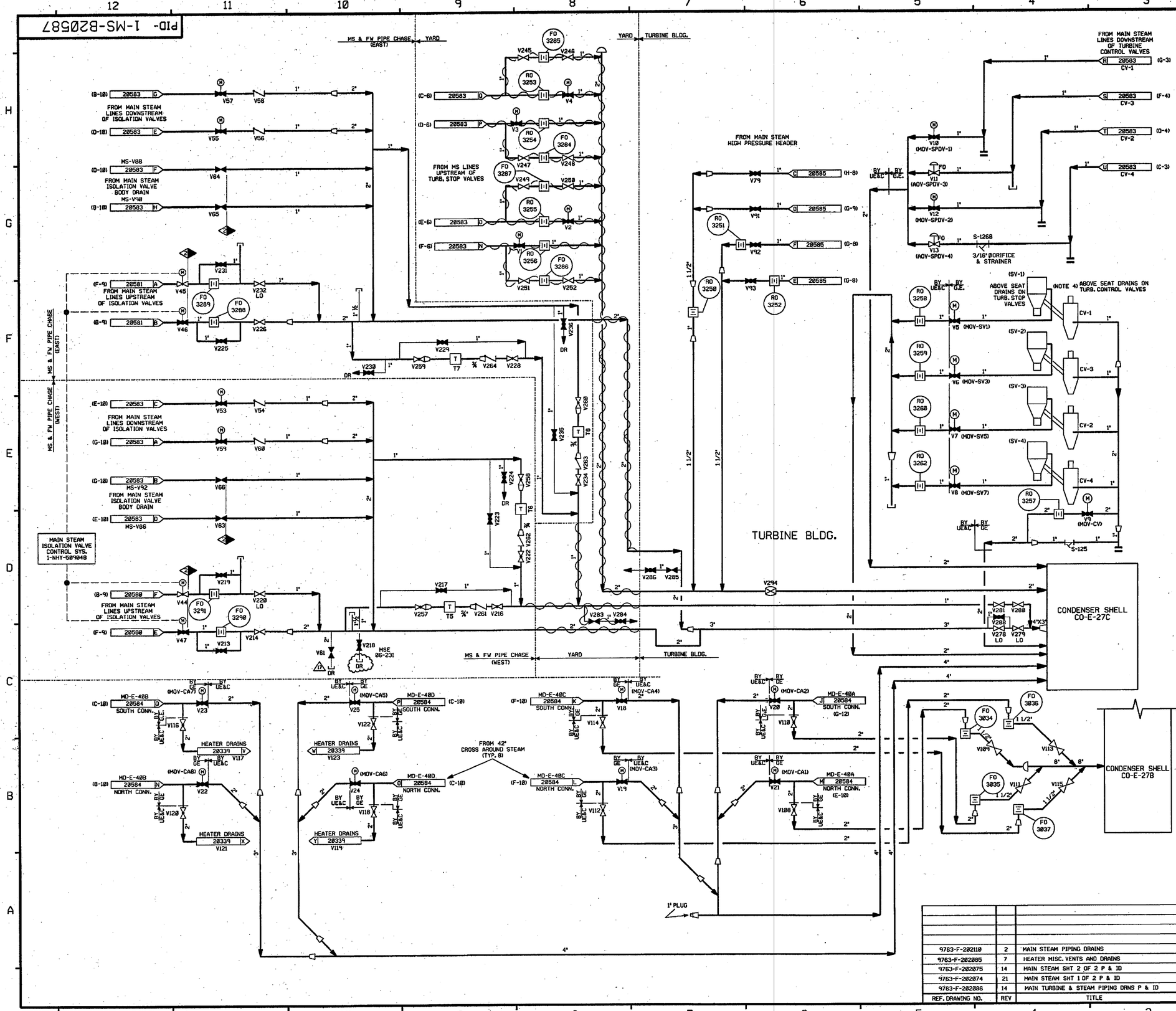

FOR P&ID REFERENCE DRAWINGS, SYMBOLS AND ABBREVIATIONS REFER TO DRAWINGS P&ID - LEGEND 1 AND P&ID - LEGEND 2

PORTIONS OF THIS DRAWING ARE

NUCLEAR SAFETY RELATED

NOTES:

1. WORK THIS DRAWING WITH DRAWINGS 20579 THRU 20586.
2. ALL LINES, EQUIPMENT, COMPONENTS AND INSTRUMENTS HAVE SYSTEM PREFIX MSO, UNLESS NOTED OTHERWISE.
3. ALL LINES, EQUIPMENT, COMPONENTS AND INSTRUMENTS ARE SAFETY CLASS NNS, UNLESS NOTED OTHERWISE.
4. MAIN STEAM CONTROL & STOP VALVES ARE SHOWN ON DRAWING 20583.
5. △ INDICATES REVISION LEVEL

REV	DATE	DSGN	CHKD	CE	DESCRIPTION
17	11-14-06	BCS	[illegible]	[illegible]	INCORP MSE 06-231 REV. 00
16	5/04/05	JM	RRB	MAP	INCORP MSE 05-103 REV 00
15	11/12/03	BCS	MPW	SD	INCORP MMOD 02-544 REV.0
14	11/16/00	MPW	BCS	SD	INCORP DCR 99-32 DCN 00
13	5/25/00	BCS	MPW	S.DAS	INCORP DCR 900032 CA-11
12	9/2/99	BCS	DWS	MKC	INCORP MMOD 980511 DCN#00
11	4/23/99	DWS	BCS	MKC	PARTIAL INCORP MMOD 980511 DCN#00
10	6/2/98	DRL	MPW	VWS	INCORP. MMOD 97-521 DCN 00 & 02
9	1/21/92	MRB	JEV	RRC	INCORP. MMOD'S 90-633 CA01 AND 91-515 CA02
8	9/23/91	GPM	MRB	RSG	INCORP. DCR'S 90-30 CA10 & 90-32 CA0
7	5/21/90	MRB	BCL	IV	RE-INCORPORATED MMOD 90-577 CA 0
6	5/15/90	MRB	APL	RSH	INCORPORATED MMOD 90-577 CA 0
5	2/5/90	MRB	RSG	IV	INCORPORATED DCR 89-34, CA0
4	2/24/89	MRB	APL	WFD	INCORPORATED DCR 88-94, CA0
3	1/28/88	MPW	GPM	RRC	ADDED: LINE SIZES, NOTE 5, P & ID LEGEND NOTE & REF. COORDINATES. REVISED: DUPLICATE VALVE NO. PER UE & C P & ID F-202110 DELETED: PIPE SPECS. INCORP. DCR 86-71A AND REV'D: NOTE 3 & 4
2	8/26/87	JDM	BCL	RRC	REVISED TIE-IN PER F-414017
1	9/12/86	MRJ	BCL	RRC	ADDED CONTINUATION REF. V-9 WAS GATE VLV. V91 WAS V61. ADDED TIE-INS FROM MD-E-40A, B, C & D, TO CO-E-27B. ADDED REF DWG. ADDED T-5, T-6, T-7, T-8 & ASSOCIATED PIPING PER DWGS F-414456 & F-414457.
0	2/5/86	TAK	ASK	WFD	ISSUED FOR OPERATIONS

REF. DRAWING NO.	REV	TITLE
9763-F-202110	2	MAIN STEAM PIPING DRAINS
9763-F-202085	7	HEATER MISC. VENTS AND DRAINS
9763-F-202075	14	MAIN STEAM SHT 2 OF 2 P & ID
9763-F-202074	21	MAIN STEAM SHT 1 OF 2 P & ID
9763-F-202086	14	MAIN TURBINE & STEAM PIPING DRNS P & ID

FPL ENERGY Seabrook Station

MAIN STEAM SYSTEM
MAIN STEAM DRAINS
DETAIL

PID- 1-MS-B20587

11/04/06

CATEGORY 1

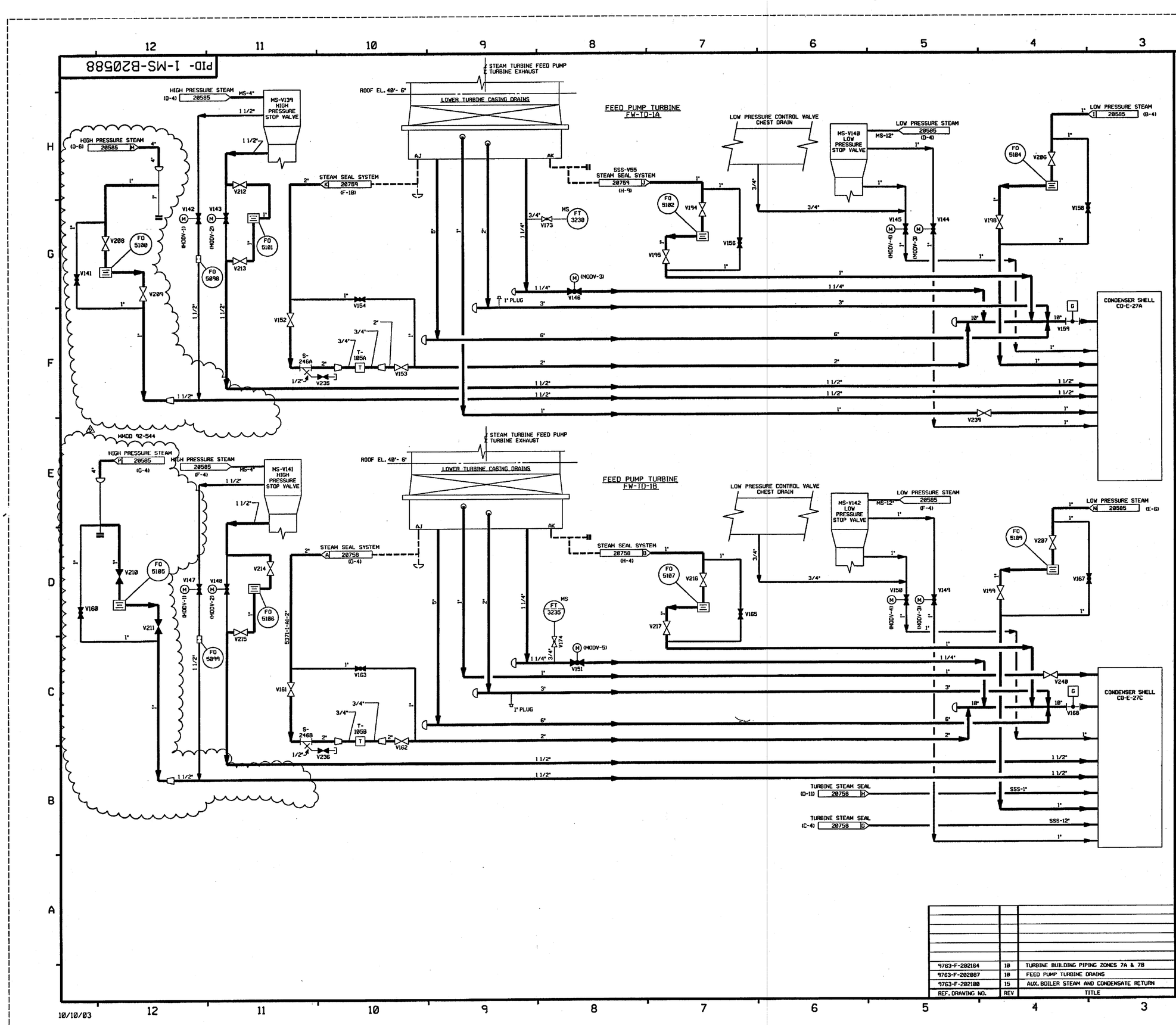

FOR P&ID REFERENCE DRAWINGS, SYMBOLS AND ABBREVIATIONS REFER TO DRAWINGS P&ID - LEGEND 1 AND P&ID - LEGEND 2

NOTES:

1.) WORK THIS DRAWING WITH DRAWINGS 20579 THRU 20587.

2.) ALL LINES, EQUIPMENT, COMPONENTS AND INSTRUMENTS HAVE SYSTEM PREFIX MVD, UNLESS NOTED OTHERWISE.

3.) MAIN STEAM CONTROL AND STOP VALVES ARE SHOWN ON DRAWING 20583.

4.) ALL LINES, EQUIPMENT, COMPONENTS AND INSTRUMENTS ARE SAFETY CLASS NNS UNLESS NOTED OTHERWISE.

5.) △ INDICATES REVISION LEVEL

REV	DATE	DSGN	CHKD	CE	DESCRIPTION
5	10-11-03	BCL	MW	RRB	INCORP. MMOD 02-544 DCN 00 & 01
4	5/25/92	MRB	BCL	RRB	INCORP. MMOD 91-515 CA0
3	5/23/90	MRB	APL	DJM	INCORP. MMOD 90-577 CA04
2	5/5/89	MRB	GPM	GRM	REVISED: NOTE 4 AND PIPING TO CLARIFY DUPLICATION OF SYSTEM & INTERFACES. ADDED: LEGEND REFERENCE NOTE. CONTINUATION COORDINATES. NOTE 5 DELETED: NUCLEAR SFTY. RELATED STAMP
1	9/17/86	MRJ	MAP	RRC	REV TO ADD RACK MOUNTED DESIGNATION TO FV-3235 FROM LOCAL MOUNT IN ERROR REVISED CONTINUATION REFERENCES.
0	6/5/86	OPO	DWS	WFD	ISSUED FOR OPERATIONS

REF. DRAWING NO.	REV	TITLE
9763-F-202164	10	TURBINE BUILDING PIPING ZONES 7A & 7B
9763-F-202087	10	FEED PUMP TURBINE DRAINS
9763-F-202100	15	AUX. BOILER STEAM AND CONDENSATE RETURN

FPL ENERGY Seabrook Station

MAIN STEAM SYSTEM
MISC. VENTS AND DRAINS
DETAIL

PID- 1-MS-B20588

10/10/03

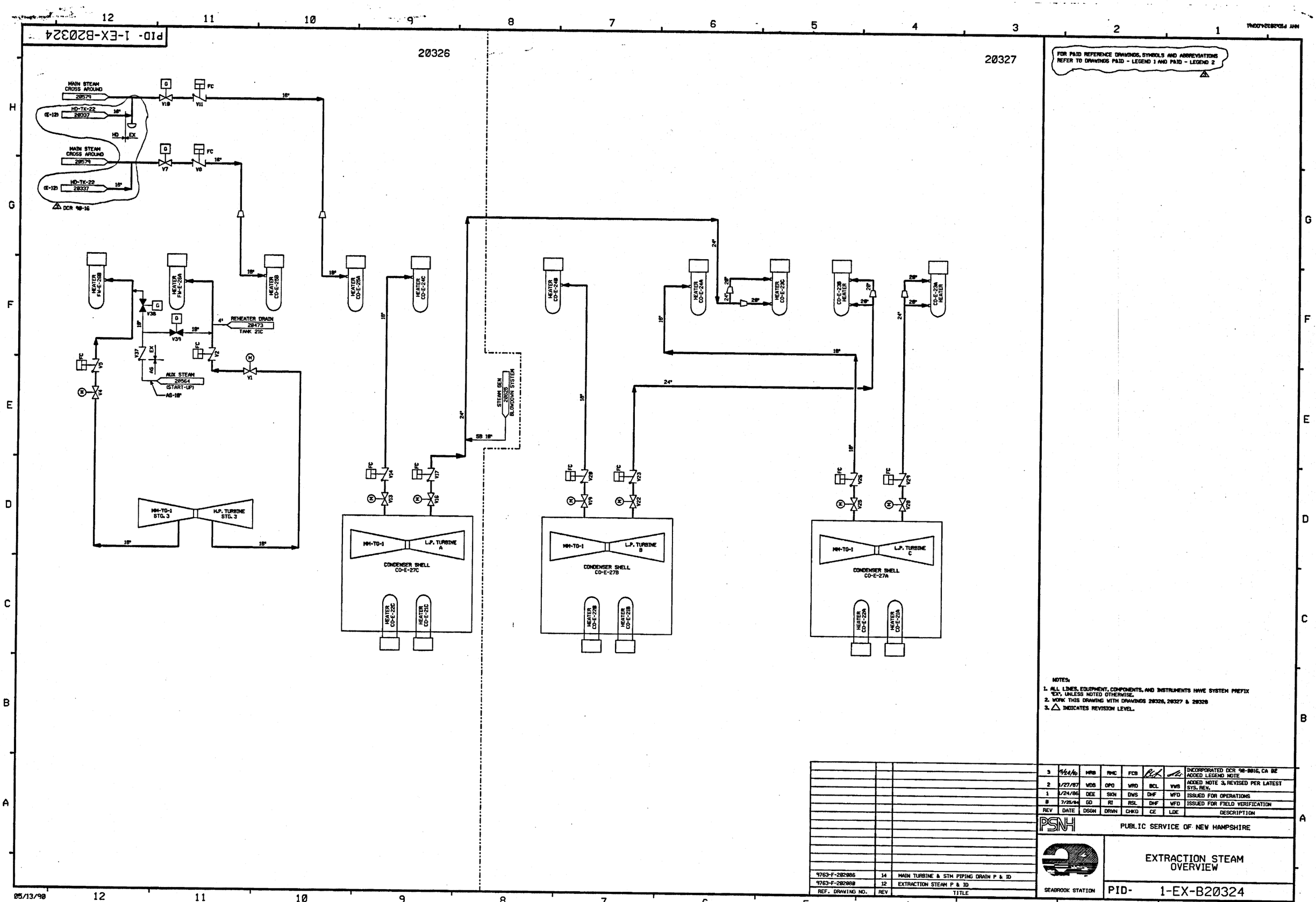
20326
20327
MAIN STEAM CROSS AROUND 28579
HD-TK-22 28337
MAIN STEAM CROSS AROUND 28579
HD-TK-22 28337
DCR 90-16
HEATER FW-E-23B
HEATER FW-E-23A
HEATER CD-E-25B
HEATER CD-E-25A
HEATER CD-E-24C
HEATER CD-E-24B
HEATER CD-E-24A
HEATER CD-E-23C
CD-E-23B HEATER
CD-E-23A HEATER
REHEATER DRAIN 28473 TANK 21C
AUX STEAM 28564 (START-UP)
STEAM GEN 28625 BLWDOWN SYSTEM
MM-TG-1 STG. 3
H.P. TURBINE STG. 3
MM-TG-1
L.P. TURBINE A
CONDENSER SHELL CD-E-27C
HEATER CD-E-22C
HEATER CD-E-21C
L.P. TURBINE B
CONDENSER SHELL CD-E-27B
HEATER CD-E-22B
HEATER CD-E-21B
L.P. TURBINE C
CONDENSER SHELL CD-E-27A
HEATER CD-E-22A
HEATER CD-E-21A
FOR P&ID REFERENCE DRAWINGS, SYMBOLS AND ABBREVIATIONS REFER TO DRAWINGS P&ID - LEGEND 1 AND P&ID - LEGEND 2
NOTES:
1. ALL LINES, EQUIPMENT, COMPONENTS, AND INSTRUMENTS HAVE SYSTEM PREFIX "EX", UNLESS NOTED OTHERWISE.
2. WORK THIS DRAWING WITH DRAWINGS 20326, 20327 & 20328
3. △ INDICATES REVISION LEVEL.
9763-F-202086 14 MAIN TURBINE & STM PIPING DRAIN P & ID
9763-F-202080 12 EXTRACTION STEAM P & ID
REF. DRAWING NO. REV TITLE
3 9/24/90 HRB RMC FCB INCORPORATED DCR 90-0016, CA 82 ADDED LEGEND NOTE
2 1/27/87 WDS OPO WRD BCL VWS ADDED NOTE 3, REVISED PER LATEST SYS. REV.
1 1/24/86 DEE SKN DWS DHF WFD ISSUED FOR OPERATIONS
0 7/25/84 GD RI RSL DHF WFD ISSUED FOR FIELD VERIFICATION
REV DATE DSGN DRWN CHKD CE LDE DESCRIPTION
PSNH PUBLIC SERVICE OF NEW HAMPSHIRE
SEABROOK STATION
EXTRACTION STEAM OVERVIEW
PID- 1-EX-B20324
05/13/90

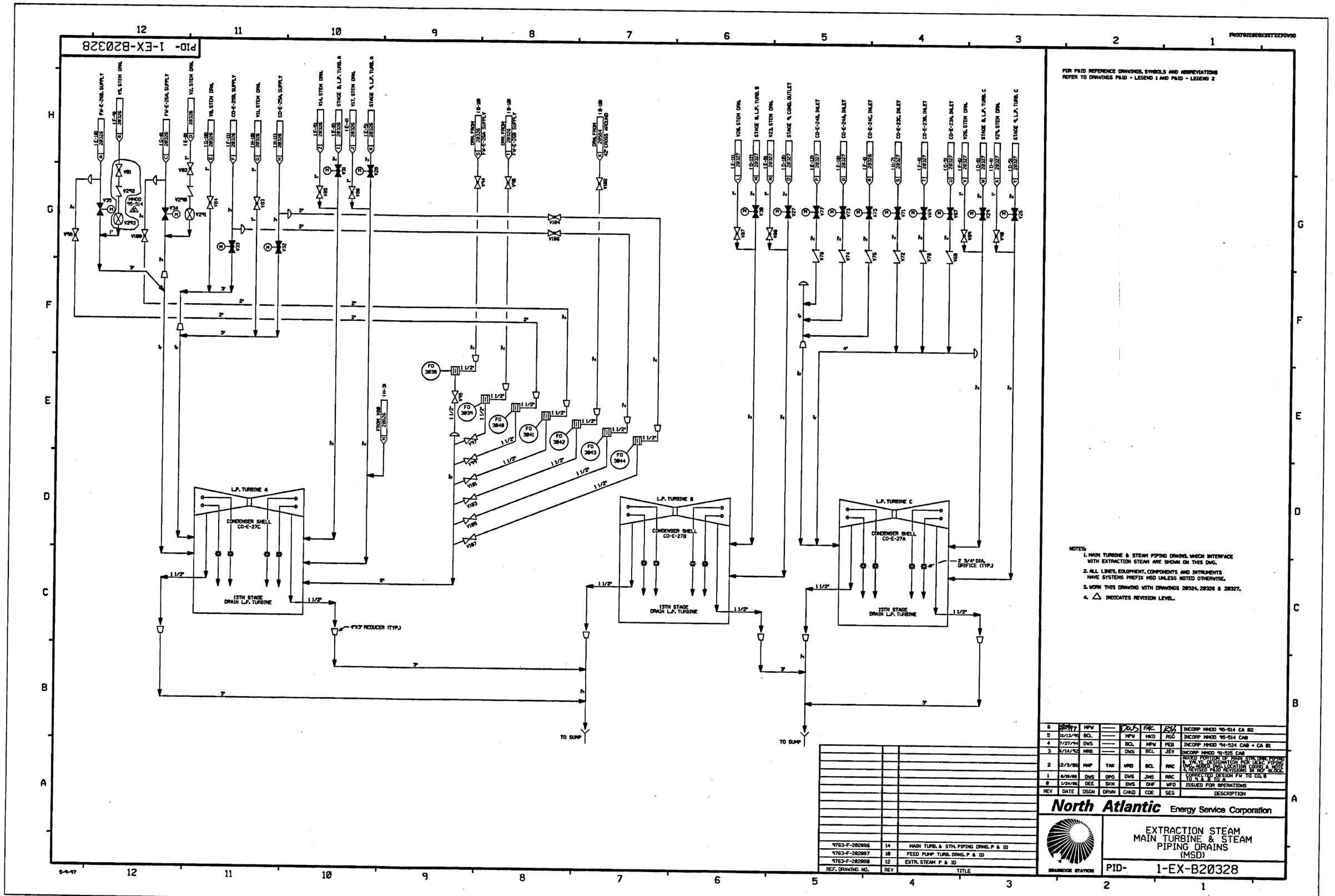
PID- 1-EX-B20328
L.P. TURBINE A
CONDENSER SHELL CO-E-27C
13TH STAGE DRAIN L.P. TURBINE
L.P. TURBINE B
CONDENSER SHELL CO-E-27B
13TH STAGE DRAIN L.P. TURBINE
L.P. TURBINE C
CONDENSER SHELL CO-E-27A
13TH STAGE DRAIN L.P. TURBINE
4"X3" REDUCER (TYP.)
2 3/4" DIA. ORIFICE (TYP.)
TO SUMP
TO SUMP
FOR P&ID REFERENCE DRAWINGS, SYMBOLS AND ABBREVIATIONS REFER TO DRAWINGS P&ID - LEGEND 1 AND P&ID - LEGEND 2
NOTES:
1. MAIN TURBINE & STEAM PIPING DRAINS, WHICH INTERFACE WITH EXTRACTION STEAM ARE SHOWN ON THIS DWG.
2. ALL LINES, EQUIPMENT, COMPONENTS AND INTRUMENTS HAVE SYSTEMS PREFIX MSD UNLESS NOTED OTHERWISE.
3. WORK THIS DRAWING WITH DRAWINGS 20324, 20326 & 20327.
4. △ INDICATES REVISION LEVEL.
9763-F-202086 14 MAIN TURB. & STM. PIPING DRNS. P & ID
9763-F-202087 10 FEED PUMP TURB. DRNS. P & ID
9763-F-202080 12 EXTR. STEAM P & ID
REF. DRAWING NO. REV TITLE
6 MPW DWS FAC RSG INCORP MMOD 95-514 CA 02
5 11/13/95 BCL MPW MKD RSG INCORP MMOD 95-514 CA0
4 7/27/94 DWS BCL MPW PEB INCORP MMOD 94-524 CA0 + CA 01
3 4/14/92 MRB DWS BCL JEV INCORP MMOD 91-515 CA0
2 12/3/86 MAP TAK WRD BCL RRC ADDED PORTION OF MAIN STM. DRN. PIPING & VALVE DESIGNATION PER UE&C PIPING DWG. ADDED DWG. LOCATION COORD. & NOTE 4, REVISED P&ID REVISIONS IN REF BLOCK.
1 8/18/86 DWS DPO DWS JMS RRC CORRECTED DESIGN FW TO CO, 8 TO 9 & 8 TO A
0 1/24/86 DEE SKN DWS DHF WFD ISSUED FOR OPERATIONS
REV DATE DSGN DRWN CHKD CDE SES DESCRIPTION
North Atlantic Energy Service Corporation
SEABROOK STATION
EXTRACTION STEAM
MAIN TURBINE & STEAM
PIPING DRAINS
(MSD)
PID- 1-EX-B20328
5-9-97

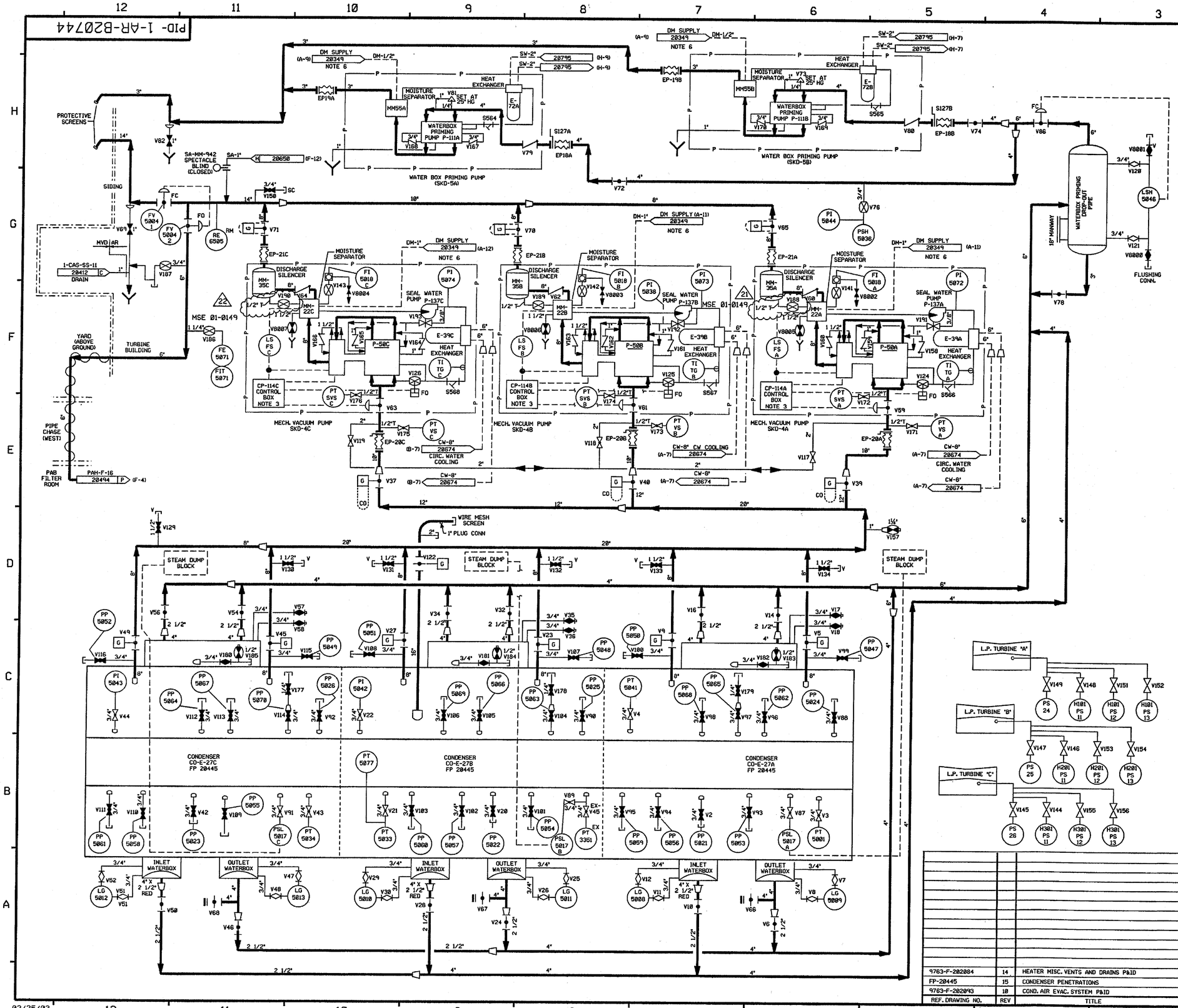

FOR P&ID REFERENCE DRAWINGS, SYMBOLS AND ABBREVIATIONS REFER TO DRAWINGS P&ID - LEGEND 1 AND P&ID - LEGEND 2

NOTES:

1. AR IS A SINGLE DRAWING SYSTEM, AN OVERVIEW IS NOT REQUIRED.
2. ALL LINES, EQUIPMENT, COMPONENTS AND INSTRUMENTS HAVE SYSTEM PREFIX AR, UNLESS NOTED OTHERWISE.
3. REFER TO FP 20606 AND 20607 FOR DETAILS.
4. ALL LINES, EQUIPMENT, COMPONENTS AND INSTRUMENTS ARE SAFETY CLASS NNS, UNLESS NOTED OTHERWISE.
5. △-INDICATES REVISION LEVEL.
6. FOR DEMINERALIZED WATER SUPPLY DETAILS TO MOISTURE SEPARATORS AR-MM-22A, 22B, 22C, 55A & 55B, SEE DWG 1-DM-20349

GENERAL REFERENCES:
LOGIC DIAGRAM M-503140
SD-2, CONDENSER AIR EVACUATION SYSTEM DESIGN DESCRIPTION.
LOOP DIAGRAM M-506049

REV	DATE	DSGN	CHKD	SES	DESCRIPTION
22	3/5/03	BCS	JM	MPW	INCORP MSE 01-149 REV 00, 01
21	2/5/03	MPW	BCS	JM	INCORP. CR 02-16149
20	2/14/02	MPW	BCS	RSG	PARTIAL INCORP MSE 01-149 REV 00, 01
19	1/3/02	BCS	—	DJM	INCORP CR 01-09109
18	12/06/01	BCS	JM	SPF	INCORP MM0D 99-623 DCN-02
17	11/2/01	MPW	JM	MRB	PARTIAL INCORP MSE 01-193 REV 00, 01
16	9/20/01	BCS	MPW	RSG	PARTIAL INCORP MSE 01-193 REV 01
15	9/14/01	MPW	MRB	ICW	PARTIAL INCORP MSE 01-193 REV 00
14	1/26/01	BCS	DWS	JCM	INCORP MSE 01-0011 REV. 0
13	9/5/00	DWS	BCS	RSG	INCORP DCR 990014 DCN*00, 01, 02 & 03 MSE 00-0108 REV-9
12	6/2/98	DRL	BCS	VWS	INCORP MM0D 97-521 DCN*00
11	6/13/97	DWS	MPW	GG	INCORP MM0D 960521 DCN*00 & 01
10	11/27/95	MPW	BCS	RRC	INCORP. DCR 94-36 CA-8
9	6/7/95	BCL	DWS	GRM	INCORP. DCR 94-20 CA-03
8	5/31/95	BCL	BCL	RSG	INCORP DCR 92-31 CA-9 & PARTIAL INCORP. DCR 94-20 CA-9
7	12/15/94	MPW	MPW	MHD	INCORP MM0D 93-545 CA0
6	3/11/94	MRB	BCL	GRM	INCORP MM0D 92-553 CA01
5	11/24/93	MRB	BCL	BAW	INCORP DCR 91-45 CA03
4	10/20/92	MRB	DWS	WDS	INCORP MM0D 90-627 CA0
3	5/8/92	MRB	MPW	BCL	INCORP. MM0D 91-511 CA03 & 91-622 CA0 REVISED NOTES 2 & 4 AND DELETED FLG'S & SPEC BREAKS FOR FUR DWG. ENHANCEMENT
2	4/20/88	PAL	BCL	RRC	CORRECTED NOTE 3, ADDED LINE SIZE & REDUCER REF SYS SHOWN IN PHANTOM
1	10/30/86	JDM	WRD	RRC	DELETED DUPLICATED VALVE SA-V284, ADDED REF DWG CODED, DELETED LINE TO MM22A, B, C PER FP-2060, REVISED CONTROL BOX NO. PER FP-20606, ADDED SYMBOLS, PER EC-2065, INCORP. EC-2065 & ECA 87/0107GA, UPDATE REF DWG REVS & REV DWG ACCORDINGLY. UPDATED CONTINUATIONS, ADDED NOTES 5&6.
0	10/10/85	GFS	DWS	WFD	ISSUED FOR OPERATIONS

REF. DRAWING NO.	REV	TITLE
9763-F-202084	14	HEATER MISC. VENTS AND DRAINS P&ID
FP-20445	15	CONDENSER PENETRATIONS
9763-F-202093	10	COND. AIR EVAC. SYSTEM P&ID

FPL ENERGY Seabrook Station

CONDENSER AIR EVACUATION SYSTEM P&ID

PID- 1-AR-B20744

02/25/03

PID- 1-SSS-B20759

FOR P&ID REFERENCE DRAWINGS, SYMBOLS AND ABBREVIATIONS REFER TO DRAWINGS P&ID - LEGEND 1 AND P&ID - LEGEND 2

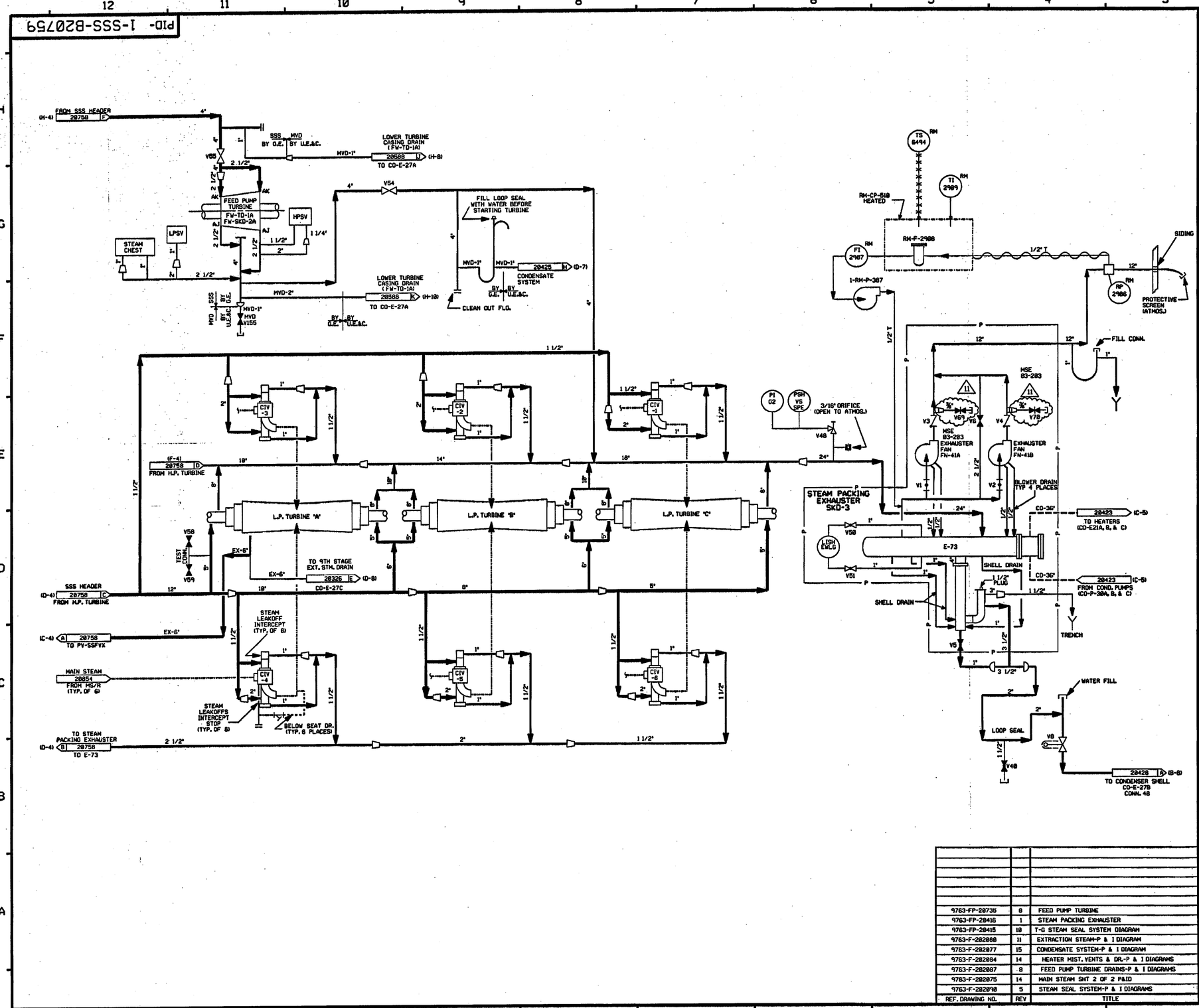

NOTES:

1. WORK THIS DRAWING WITH DRAWINGS 20756 & 20758.
2. ALL LINES, EQUIPMENT, COMPONENTS AND INSTRUMENTS HAVE SYSTEM PREFIX 1-SSS, UNLESS NOTEDS OTHERWISE.
3. ALL LINES, EQUIPMENT, COMPONENTS AND INSTRUMENTS ARE SAFETY CLASS "NNS" UNLESS NOTED OTHERWISE.
4. △ INDICATES REVISION LEVEL.
5. DELETED
6. ——— DOTTED & DASHED LINES DENOTE MAIN STEAM PIPING.

REV	DATE	DSGN	CHKD	SES	DESCRIPTION
11	6-8-04	BCS	JM	KEB	INCORP. MSE 03-283 REV-00
10	12/18/03	BCS	JM	PEB	REVISED PER CR 99-10734 REV. 0
9	5/7/03	MPW	JM	BCS	REVISED PER FP'S 28416,28128 & ISO'S
8	1/8/01	BCS	DWS	JCM	INCORP MSE 000031 REV.0
7	12/4/95	MPW	BCS	DJM	INCORP MHOD 95-684 CA0
6	4/28/92	MRB	DWS	JEV	INCORP MHOD 91-515 CA0
5	2/2/90	MRB	APL	IW	RE-INCORPORATED DCR 88-197 CA-01
4	5/5/89	MRB	GPM	GRM	INCORPORATED DCR 88-197 CA 00, REVISED: NOTE 3, CONT. TAG DESCRIPTIONS ADDED: CONTINUATIO COORDINATES
3	11/28/88	WDS	WRD	RRC	ADDED NOTE FOR P&ID LEGEND, DWG CONT COORD'S, DELETED NOTE 5 AND CHANGE ITEM 3, REVISED DRAFTING ERRORS AND REF DWG REVS.
2	6/28/88	DWS	JDM	RRC	ADDED CO CONFIG. & CO-E-27C DESIGN, REMOVED CHANGE ITEMS 1 & 2. ADDED CHANGE ITEM #3
1	10/18/85	TAK	DWS	WFD	ISSUED FOR OPERATIONS. GENERAL REVISION INCORP. ECA 99/105825A
0	07/25/84	CD	RSL	WFD	ISSUED FOR FIELD VERIFICATION

REF. DRAWING NO.	REV	TITLE
9763-FP-28735	0	FEED PUMP TURBINE
9763-FP-28416	1	STEAM PACKING EXHAUSTER
9763-FP-28415	10	T-G STEAM SEAL SYSTEM DIAGRAM
9763-F-202888	11	EXTRACTION STEAM-P & I DIAGRAM
9763-F-202877	15	CONDENSATE SYSTEM-P & I DIAGRAM
9763-F-202884	14	HEATER MIST. VENTS & DR.-P & I DIAGRAMS
9763-F-202887	8	FEED PUMP TURBINE DRAINS-P & I DIAGRAMS
9763-F-202875	14	MAIN STEAM SHT 2 OF 2 P&ID
9763-F-202890	5	STEAM SEAL SYSTEM-P & I DIAGRAMS

FPL ENERGY Seabrook Station

TURBINE STEAM SEAL SYSTEM DETAIL

PID- 1-SSS-B20759

06/08/04

PID- 1-CW-B20672

FOR P&ID REFERENCE DRAWINGS, SYMBOLS AND ABBREVIATIONS REFER TO DRAWINGS P&ID - LEGEND 1 AND P&ID - LEGEND 2

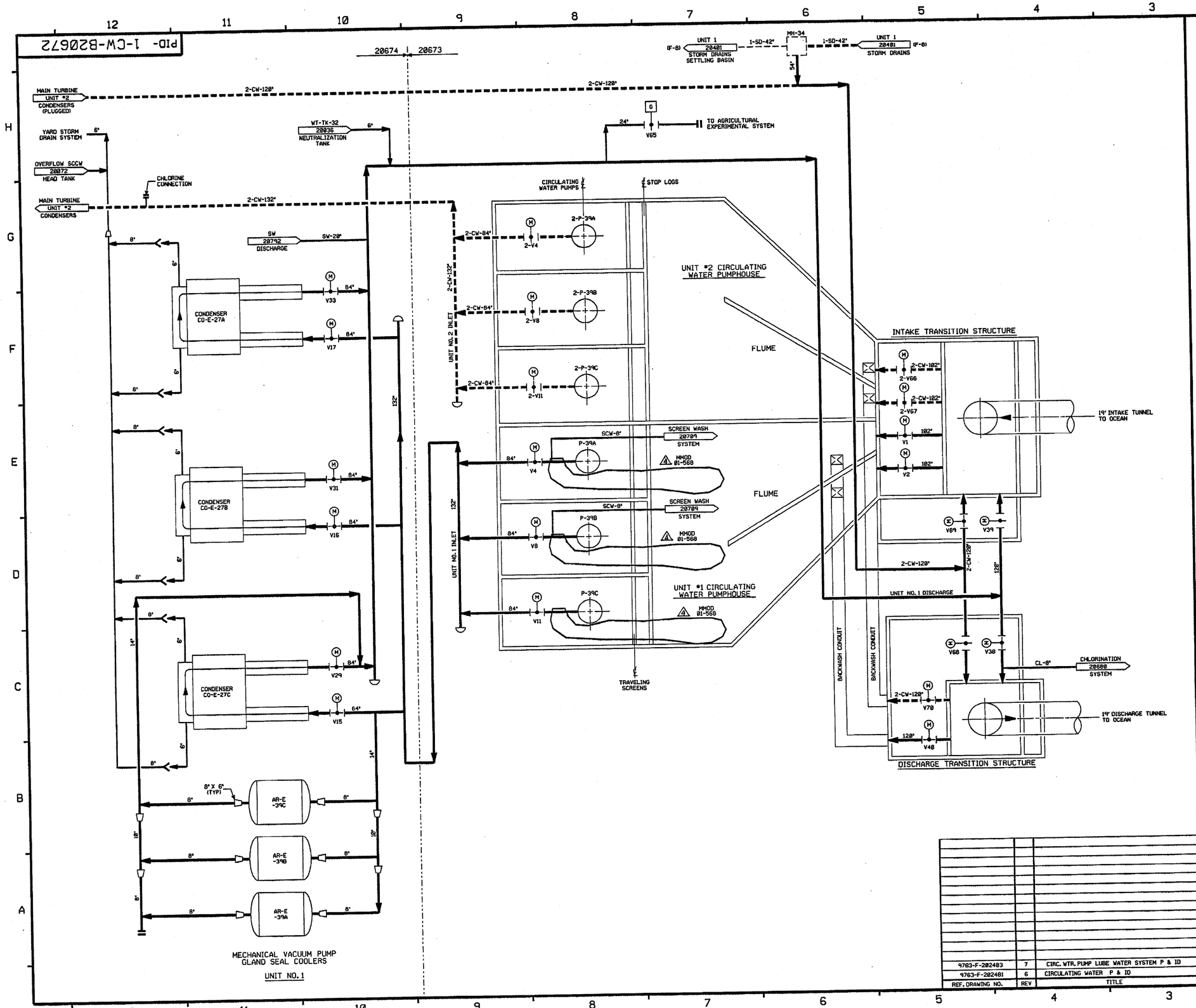

NOTES:

1.) WORK THIS DRAWING WITH DRAWINGS 20673, 20674 & 20675.

2.) ALL LINES, EQUIPMENT, COMPONENTS AND INSTRUMENTS HAVE SYSTEM PREFIX 1-CW, UNLESS NOTED OTHERWISE.

3.) FOR CIRCULATING WATER PUMP LUBRICATING WATER SYSTEM DETAIL SEE DRAWING 20675.

4.) △ INDICATES DRAWING REVISION

REF. DRAWING NO.	REV	TITLE
9763-F-202483	7	CIRC. WTR. PUMP LUBE WATER SYSTEM P & ID
9763-F-202481	6	CIRCULATING WATER P & ID

REV	DATE	DSGN	DRWN	CHKD	CDE	SES	DESCRIPTION
4	5/17/02	MPW	—	JM	—		INCORP. MMOD 01-568 DCN 00
3	1/15/93	MRB	—	BCL	DWS	JCM	RE-INCORP. MMOD 91-515 CA 0 AND OCR 92-52 CA0
2	7/21/92	DWS	—	MRB	MPW	WFZ	INCORP. OCR 92-52 CA0 & MMOD 91-515 CA1
1	1/27/87	WDS	TAK	WRD	BCL	VWS	ADDED NOTE 4, REVISED PER LATEST SYSTEM DRAWINGS
0	1/28/86	DEE	GJS	TAK	JMK	WFD	ISSUED FOR OPERATIONS

North Atlantic Energy Service Corporation

SEABROOK STATION

CIRCULATING WATER OVERVIEW

PID- 1-CW-B20672

05/13/02

PID- 1-CW-B20673

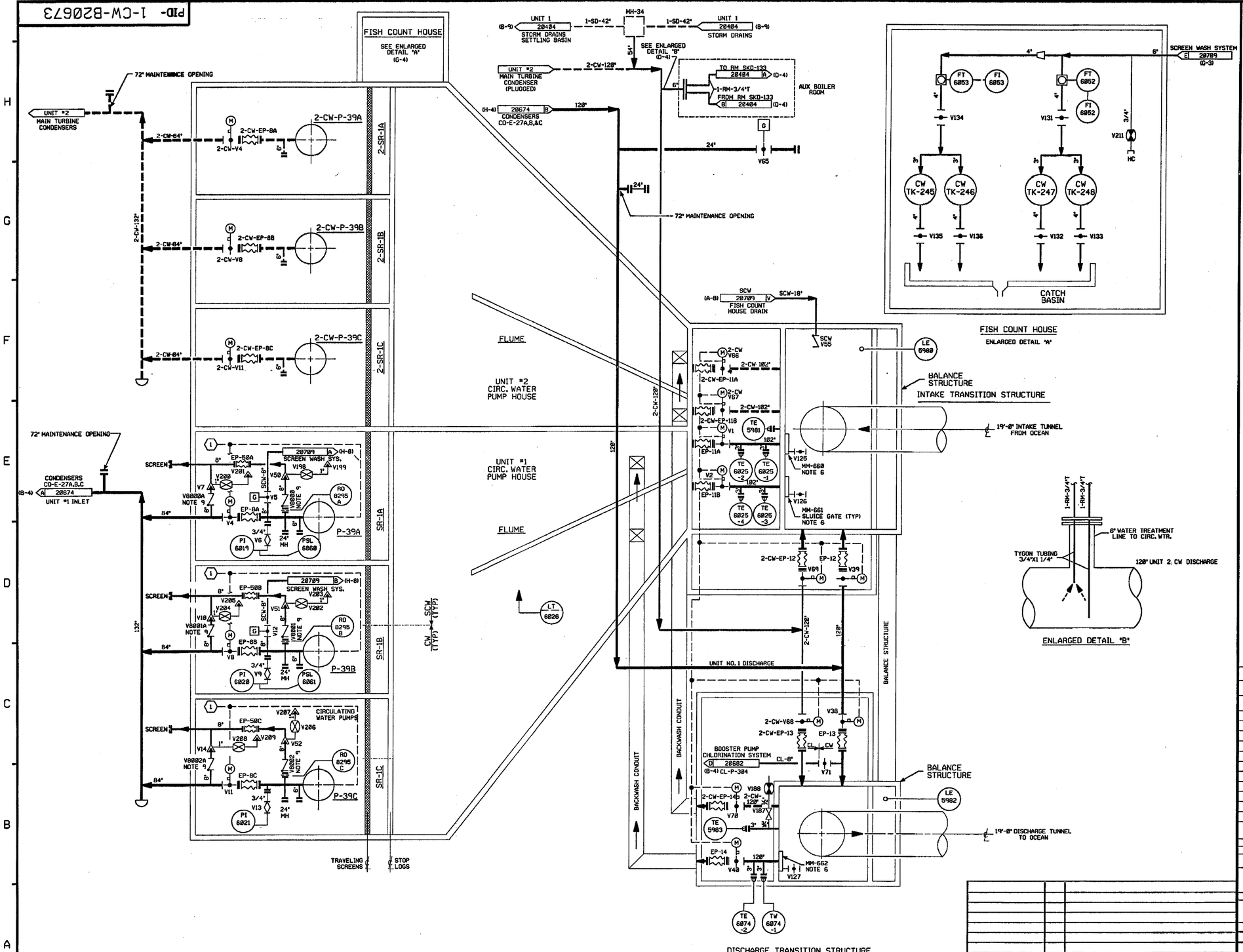

FOR P&ID REFERENCE DRAWINGS, SYMBOLS AND ABBREVIATIONS REFER TO DRAWINGS P&ID - LEGEND 1 AND P&ID - LEGEND 2

NOTES:

1.) WORK THIS DRAWING WITH DRAWINGS 28672, 28674 & 28675.

2.) ALL LINES, EQUIPMENT, COMPONENTS AND INSTRUMENTS HAVE SYSTEM PREFIX 1-CW, UNLESS NOTED OTHERWISE.

3.) ALL LINES, EQUIPMENT, COMPONENTS AND INSTRUMENTS ARE SAFETY CLASS NNS, UNLESS NOTED OTHERWISE.

4.) DELETED. △2 CR 04-06277

5.) (1) LUBE WATER FLOW NORMAL, SCREEN DIFFERENTIAL NORMAL AND CONDENSER WATER BOX VACUUM BREAKER VALVES CLOSED.

6.) SLUICE GATES ARE DESIGNED TO BE USED INTERCHANGEABLY IN ANY SET OF GUIDES OF THE SPECIFIED SIZE.

7.) DASH LINES DESIGNATE UNIT #2 PIPING.

8.) △ - INDICATES REVISION LEVEL.

9.) THE DUAL FUNCTION OF THESE SURGE CHECK VALVES IS TO LET AIR BE RELEASED FREELY FROM THE CW SYSTEM THROUGH THE VENT, BUT CLOSE WHEN SEAWATER RAPIDLY ENTERS THE VALVE AFTER VENTING IS COMPLETE.

10.) VALVE V187 IS ON A COUPLING WELDED TO THE THERMOWELL SLEEVE. REF. SPEC. 252-8 SH. 41

REV	DATE	DSGN	CHKD	SES	DESCRIPTION
21	10/13/04	BCS	JM	[illegible]	INCORP. CR 04-06277 REV. 0
20	4/3/03	JM	BCS	MPW	INCORP. CR 00-08723 REV 00 & CR 02-14653 REV 00
19	1/6/03	JM	MPW	BCS	INCORP. CR 02-01414 REV 00 & CR 02-08274 REV 00
18	5/17/02	MPW	JM	IW	INCORP. MMOD 01-568 DCN 00, 06
17	10/15/01	BCS	JM	JHS	INCORP. MSE 99-0219 REV. 0
16	4/13/00	MPW	DWS	RPN	INCORP. MMOD 93-562 DCN 00
15	11/17/98	MPW	BCS	RSG	INCORP. MMOD 98-639 DCN 00
14	11/16/97	DWS	MPW	JCM	INCORP DCR 950011 CA#0
13	6/27/96	BCS	MPW	HWM	INCORP. DCR 91-26 CA-05
12	12/4/94	MPW	BCL	MHO	INCORP. MMOD 93-545 CA0
11	7/27/92	DWS	MPW	IW	INCORP DCR 870237 CA#0 & 1
10	7/21/92	DWS	MRB	WFZ	REINCORP. DCR 90-52
9	6/19/92	MRB	BCL	IW	RE-INCORP. MMOD 91-515 CA01
8	2/6/92	MRB	BCL	RSG	INCORP. MMOD 91-515 CA01
7	2/5/92	MRB	BCL	RSG / WFZ	INCORP DCR'S 91-81 CA0 & 90-52 CA0 REV. CONTINUATIONS TO REFLECT CORRES. PID'S
6	3/11/91	MRB	APL	IW	INCORP. DCR 89-85 CA03
5	5/1/90	MRB	APL	IW	INCORPORATED DCR 86-433 CA29
4	4/25/89	GPM	MRB	PEB	REVISED: NOTE 3 INCORP. DCR 86-546 CA05
3	11/21/86	PAL	PAL	RRC	ADDED VALVE NO'S V8000-8003, 2-CW PREFIX FOR UNIT 2 REFS AND REF CODNO'S TO FLAGS. DELETED NOTE 9 AND N/A REF DWG.
2	9/22/86	MAP	BCL	RRC	INCORP ECA 19/117262A
1	6/20/86	BLL	BCL	RRC	CHGD V68 TO V38 PER DE&C P&ID VALVES V30,V31 & V32 ARE DUEL ACTION VALVES, HENCE VALVE NO'S V8000-V8003 ARE NOT REQUIRED.
0	01/28/86	DEE	TAK	WFD	ISSUED FOR OPERATIONS

REF. DRAWING NO.	REV	TITLE
9763-F-202481	6	CIRCULATING WATER P & ID

FPL ENERGY Seabrook Station

CIRCULATING WATER DETAIL

PID- 1-CW-B20673

09/28/04

PID- 1-CW-B20674

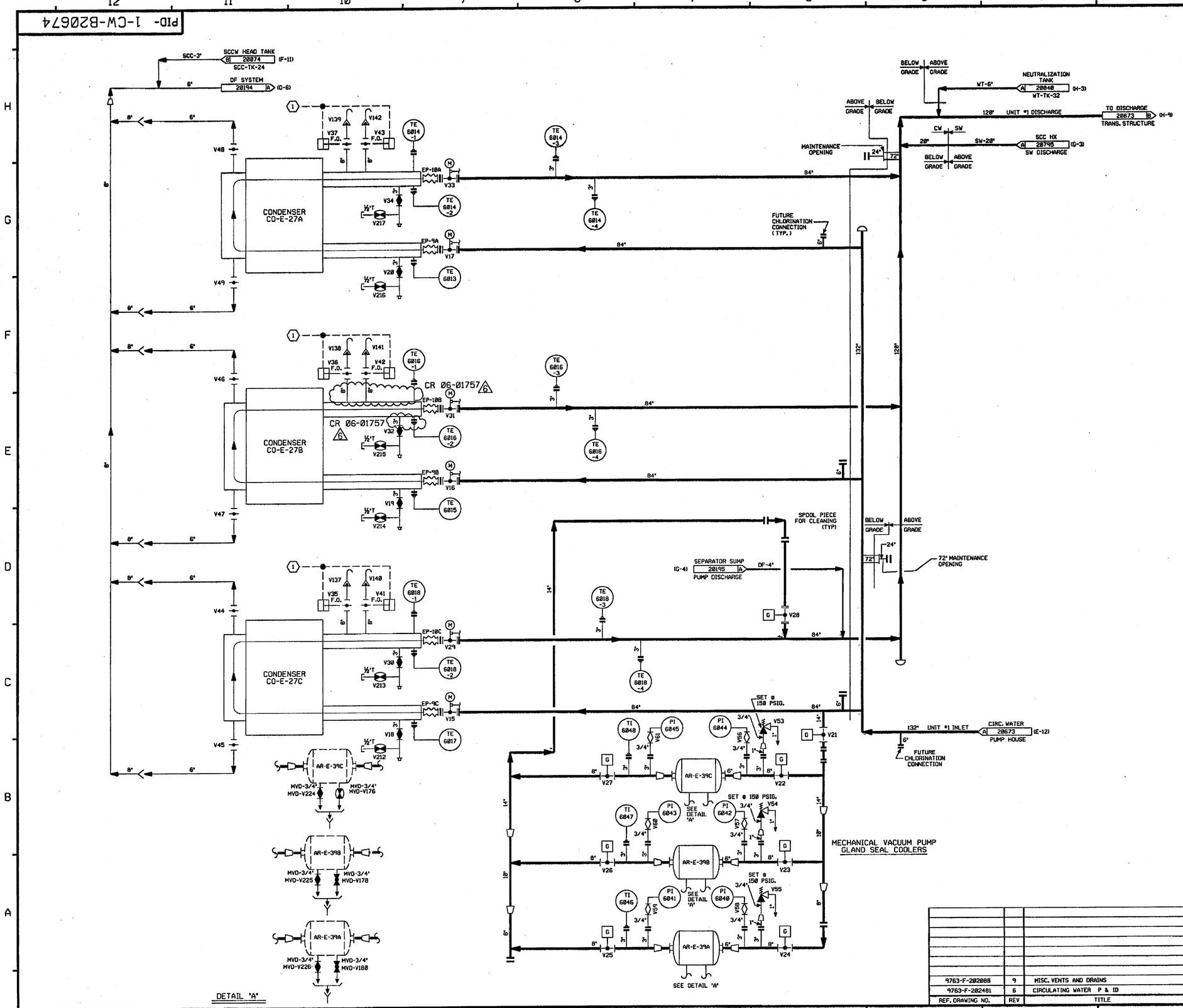

FOR P&ID REFERENCE DRAWINGS, SYMBOLS AND ABBREVIATIONS REFER TO DRAWINGS P&ID - LEGEND 1 AND P&ID - LEGEND 2

NOTES:

1.) WORK THIS DRAWING WITH DRAWINGS B20672, B20673 & B20675.

2.) ALL LINES, EQUIPMENT, COMPONENTS AND INSTRUMENTS HAVE SYSTEM PREFIX 1-CW, UNLESS NOTED OTHERWISE.

3.) ALL LINES, EQUIPMENT, COMPONENTS AND INSTRUMENTS ARE SAFETY CLASS NNS UNLESS NOTED OTHERWISE.

(1) LUBE WATER FLOW NORMAL, SCREEN DIFFERENTIAL NORMAL AND CONDENSER WATER BOX VACUUM BREAKER VALVES CLOSED.

4. △ INDICATES REVISION LEVEL.

REV	DATE	DSGN	CHKD	CE	DESCRIPTION
6	3-29-06	BCS	JM	RRB	INCORP. CR 06-01757 REV. 0
5	10/1/01	BCS	MPW	DJM	INCORP. MSE 00-0376 REV. 0
4	10/6/99	MPW	BCS	DJM	INCORP. DCR 95-38 DCN 00
3	4/09/97	JDM	PAL	RRC	INCORP. DCR 86-602 CA 00
2	11/12/96	PAL	WRD	RRC	ADDED NOTE 4, REF. COORD'S TO REF. FLAGS, MVD DRAINS TO GLAND SEAL COOLERS FLANGES TO VALVES & DWG. TO REF. BLOCK
1	6/13/86	DWS	DWS	RRC	ADDED DF CONTINUATION
0	1/28/86	DEE	TAK	WFD	ISSUED FOR OPERATIONS

REF. DRAWING NO.	REV	TITLE
9763-F-202088	9	MISC. VENTS AND DRAINS
9763-F-202481	6	CIRCULATING WATER P & ID

FPL ENERGY Seabrook Station

CIRCULATING WATER DETAIL

PID- 1-CW-B20674

03/23/06

NHY PID:20680.DGN

PID- 1-CL-B20680

20682

FOR P&ID REFERENCE DRAWINGS, SYMBOLS AND ABBREVIATIONS REFER TO DRAWINGS P&ID - LEGEND 1 AND P&ID - LEGEND 2

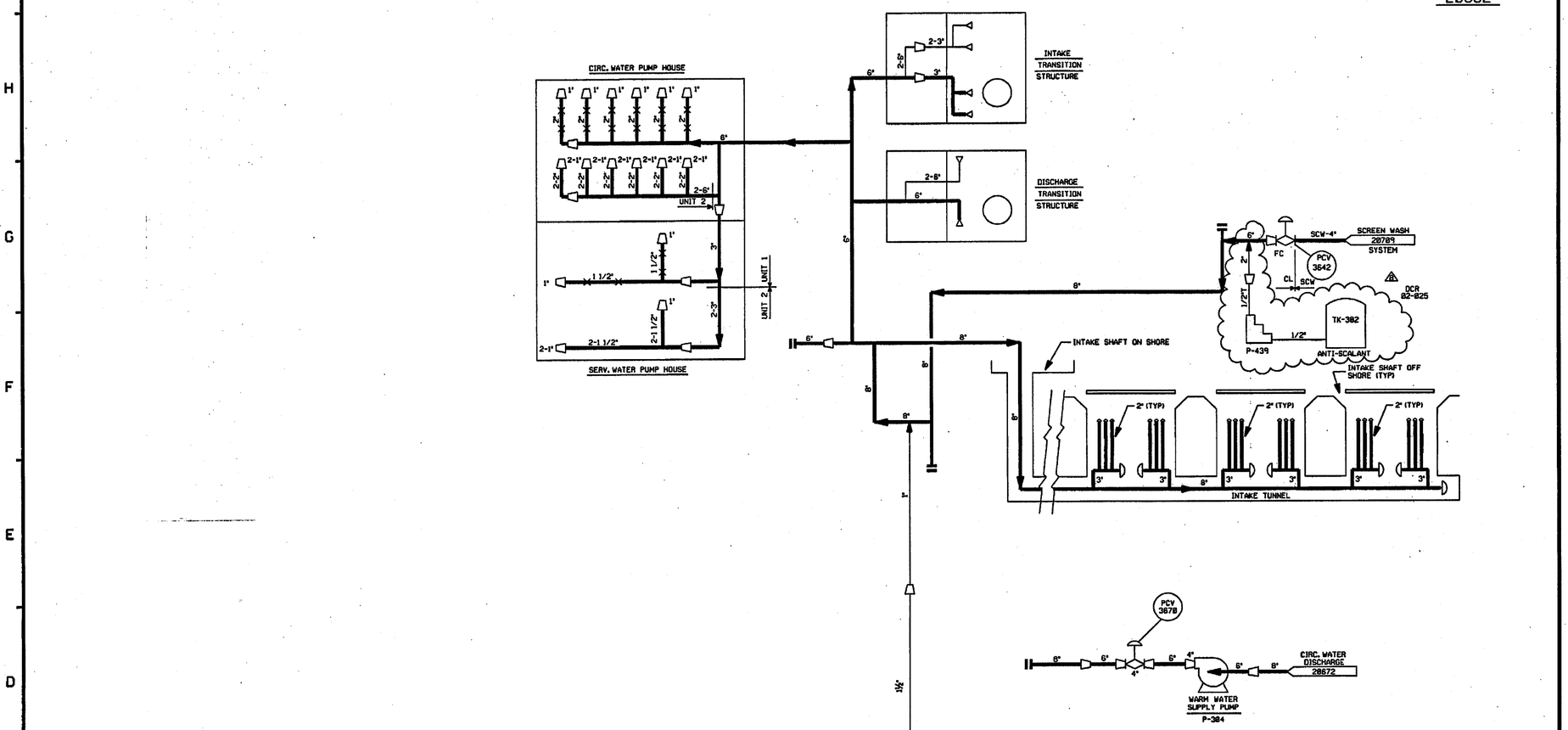

20682

20681

20681

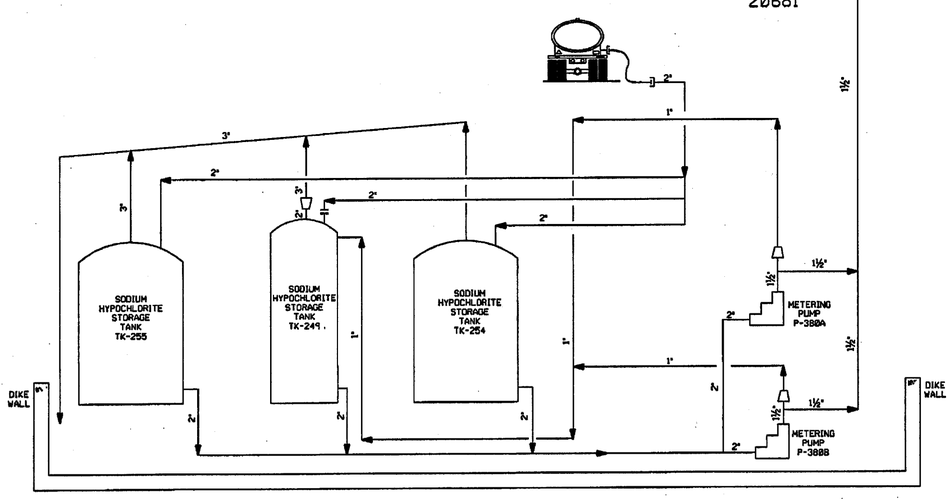

NOTES:
1. WORK THIS DWG WITH DWGS. 20681 & 20682.
2. ALL LINES, EQUIPMENT, COMPONENTS AND INSTRUMENTS HAVE SYSTEM PREFIX CL UNLESS NOTED.
3. △ - INDICATES REVISION LEVEL.

REV	DATE	DSGN	CHKD	SES	DESCRIPTION
8	4/29/04	BCS	JTM	MK	INCORP. DCR 82-825 DCN-002.
7	5/25/02	JM	MPW	RRB	INCORPORATED MMOD 01-0568 DCN 08
6	3/24/00	BCS	MPW	SPF	INCORPORATED DCR 99-19 DCN-00
5	3/31/97	BCS	DWS	RSG	INCORPORATED DCR 94-49 CA0, 03, DCR 92-0012 CA-0, REINCORP. DCR 91-26 CA-0.
4	3/19/92	MRB	RMC	IW	INCORPORATED DCR 91-26 CA0
3	3/27/91	MRB	JM	MPW	INCORP DCR 88-183 CA09 ADDED: P&ID REFERENCE DWG NOTE
2	4/25/89	MPW	MRB	PEB	DELETED: DCN 65/2228 IN INCOMPLETE ITEMS PER DCR 86-546; INCORP: DCR 86-546 CA16.
1	1/28/87	WDS	WRD	VWS	ADDED NOTE 3, REVISED PER LATEST SYSTEM DRAWINGS
0	1/13/86	DM	WES	EWD	ISSUED FOR OPERATIONS

REF. DRAWING NO.	REV	TITLE
9763-F-282484	7	INTAKE TUNNEL CHLORINATION & DISTRIBUTION SYSTEM P & ID

FPL ENERGY Seabrook Station

CHLORINATION SYSTEM OVERVIEW

PID- 1-CL-B20680

04/29/04

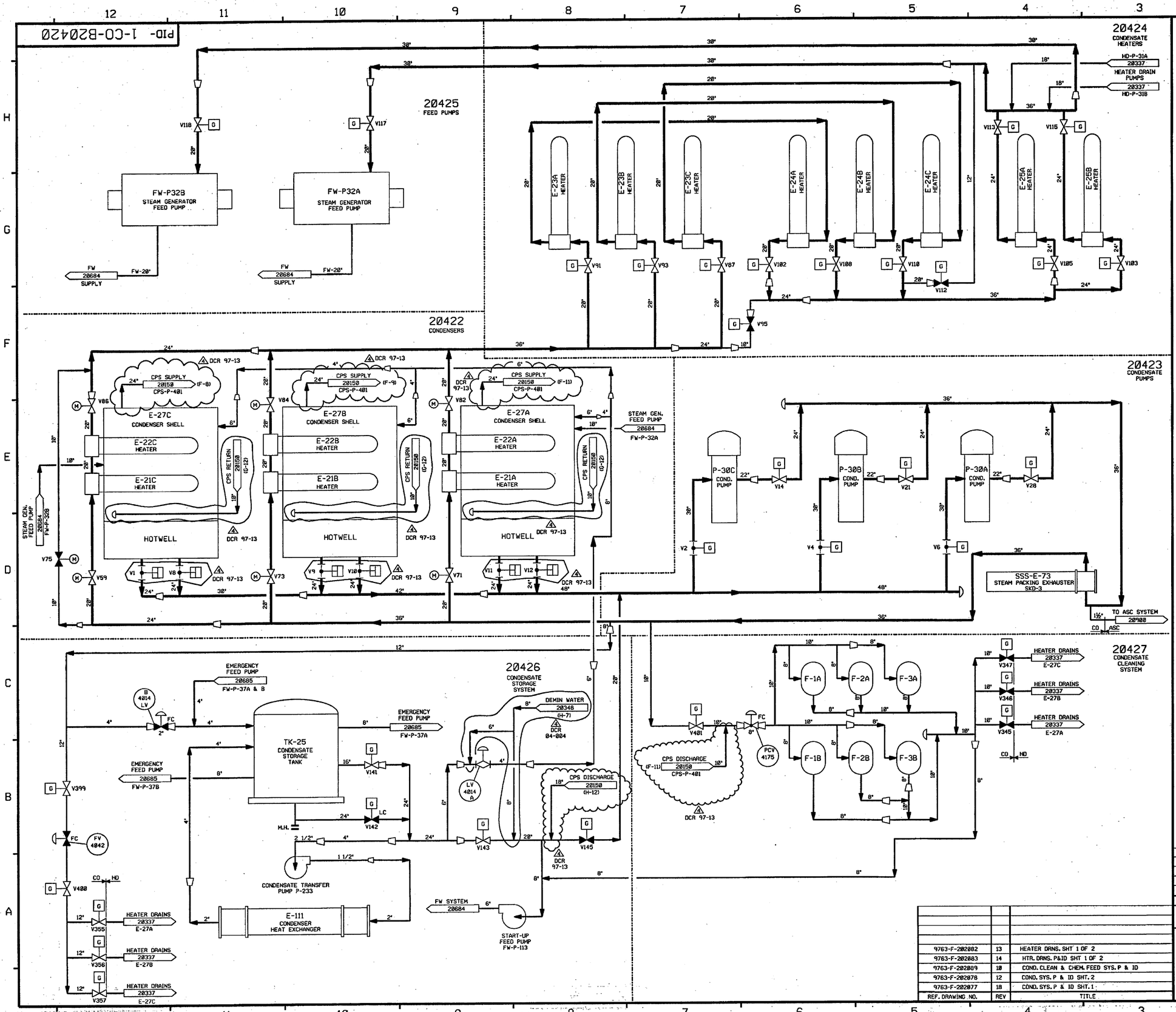

NOTES:

1. WORK THIS DRAWING WITH DRAWINGS 20422 THRU 20430.
2. ALL PIPES, VALVES, EQUIPMENT AND INSTRUMENTS HAVE SYSTEM PREFIX CO, UNLESS NOTED OTHERWISE.
3. MISCELLANEOUS VENTS AND DRAINS FOR CO SYSTEM ARE SHOWN ON DRAWINGS 20428 THRU 20430.
4. △ - INDICATES REVISION LEVEL.

REV	DATE	DSGN	CHKD	CE	DESCRIPTION
4	4/7/05	BCS	GPS	GAB	INCORP. DCR 97-13 DCN 00, DCR 04-004 DCN 00
3	11/15/96	MPW	BCS	JCM	INCORP. DCR 92-24 CA 5
2	1/21/87	MPW	WRD	VWS	REVISED PER LATEST SYSTEM DRAWINGS.
1	5/16/86	DWS	JDM	WFD	ADDED NOTE 3 & 4
0	1/13/86	DWS	TAK	WFD	ISSUED FOR OPERATIONS

REF. DRAWING NO.	REV	TITLE
9763-F-202082	13	HEATER DRNS. SHT 1 OF 2
9763-F-202083	14	HTR. DRNS. P&ID SHT 1 OF 2
9763-F-202089	10	COND. CLEAN & CHEM. FEED SYS. P & ID
9763-F-202078	12	COND. SYS. P & ID SHT. 2
9763-F-202077	18	COND. SYS. P & ID SHT. 1

FPL ENERGY Seabrook Station

CONDENSATE SYSTEM OVERVIEW

PID- 1-CO-B20420

04/05/05

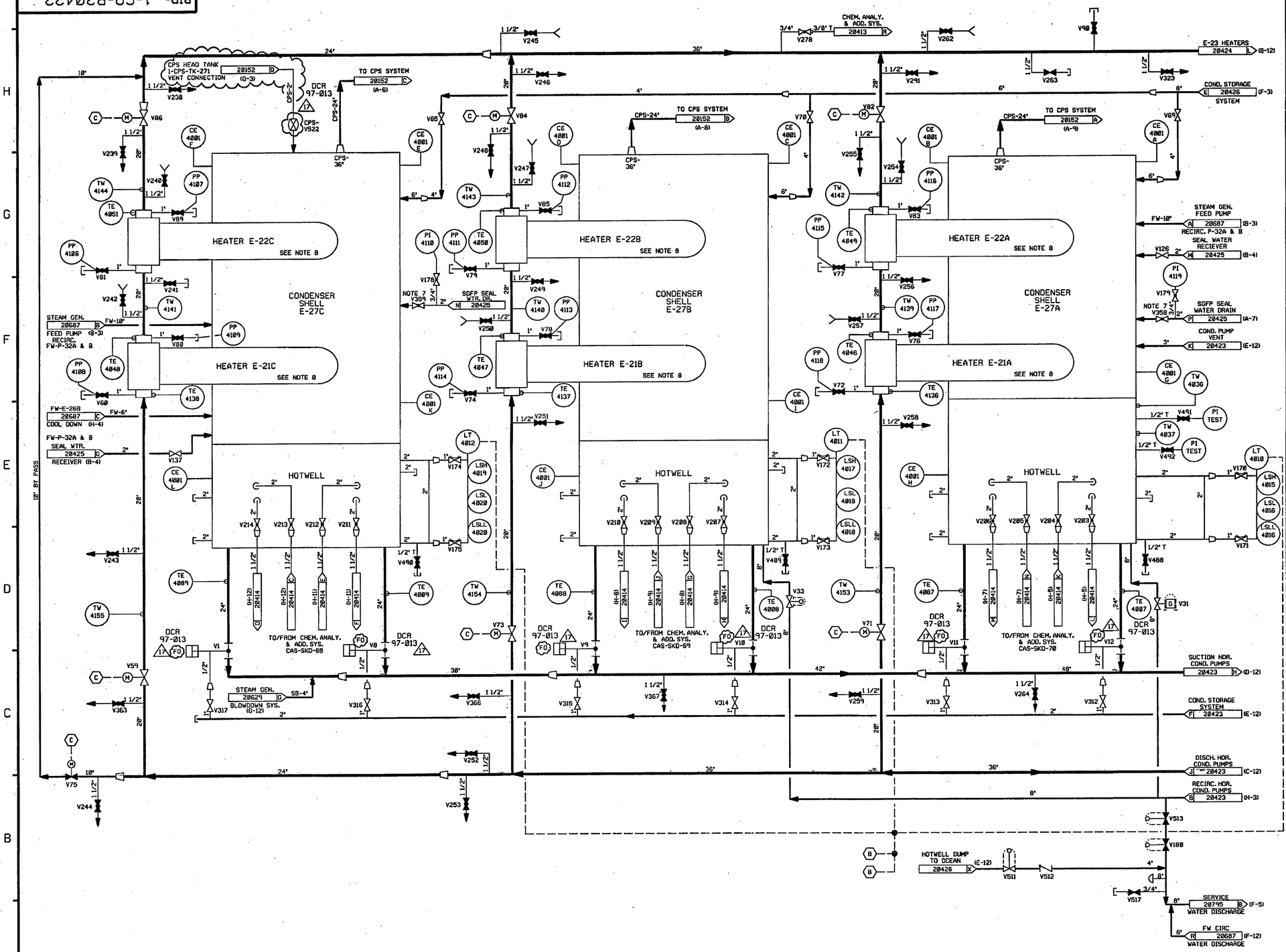

FOR P&ID REFERENCE DRAWINGS, SYMBOLS AND ABBREVIATIONS REFER TO DRAWINGS P&ID-LEGEND 1 AND P&ID-LEGEND 2.

NOTES:

1. WORK THIS DRAWING WITH DRAWINGS 20428, 20423 THRU 20427.
2. ALL LINES, VALVES, EQUIPMENT, COMPONENTS AND INSTRUMENTS HAVE SYSTEM PREFIX CO, UNLESS NOTED OTHERWISE.
3. ALL LINES, EQUIPMENT, COMPONENTS AND INSTRUMENTS ARE SAFETY CLASS NNS, UNLESS NOTED OTHERWISE.
4. INSTRUMENTATION REFERENCES:
   - (B) TO COND. STORAGE SYSTEM, 1-CO-LV-4014A & B ON DWG CO-20426.
   - (C) HIGH-HIGH LEVEL TO CLOSE RESPECTIVE HEATER COND. INLET TO NO. 1 & OUTLET OF NO. 2 WHILE OPENING BYPASS VALVE 1-CO-V75.
5. DELETED
6. △ - INDICATES REVISION LEVEL
7. VALVES 358 & 359 TO BE MAINTAINED IN A THROTTLED POSITION TO PROVIDE A 40 PSIG NOMINAL BACK PRESSURE.
8. FOR OTHER NOZZLES ON HEATERS 1-CO-21A,B&C AND 1-CO-E-22A,B&C SEE PID'S
   CO-20428
   CO-20426
   EX-20326
   EX-20327
   HD-20339
   HD-20340
   HD-20341

REV	DATE	DSGN	CHKD	CE	DESCRIPTION
17	4/14/05	BCS	JM	DGZ	INCORP DCR 97-13 DCN-00, 60, 222
16	10/14/03	MPW	JM	SAK	PARTIAL INCORP. DCR 97-013 DCN 00. INCORP. DCR 97-013 DCN 29 & 51
15	4/03/03	BCS	JM	MPW	INCORP CR 03-01559 REV. 0
14	5/25/02	BCS	MPW	RRB	INCORP MMOD 00-0533 DCN#01
13	5/17/02	JM	MPW	ICW	INCORP MMOD 00-0533 DCN#00
12	10/01/01	BCS	MPW	DJM	INCORP MSE 99-0161 REV. 0
11	11/14/00	MPW	BCS	DJM	INCORP DCR 95-0030 DCN 00 & 32 PARTIAL INCORP DCR 97-0013 DCN 29
10	4/12/99	RWS	BCS	MKC	INCORP DCR 97-0044 DCN 07
9	6/20/97	MPW	DWS	WNF	INCORP MMOD 96-583 DCN 01. DCR 92-59 DCN 00, 01 & 03. PARTIAL INCORP DCR 95-30 DCN 00
8	2/28/96	DWS	BCS	VWS	INCORP MMOD 940574 CA*8
7	4/18/94	MPW	BCL	MPW	INCORP MMOD 93-554 CA0
6	4/5/93	MRB	DWS	JCM	INCORP MMOD 92-553 CA0
5	4/23/92	MRB	BCL	JEV	INCORP MMOD 91-515 CA0
4	9/17/91	MRB	JM	IW	INCORP. MMOD 90-647, CA0
3	10/23/87	MPW			INCORP DCR 87-125 & 87-142, REVISED NOTE 3.
2	10/3/86	PAL	MAP	RRC	ADDED LEGEND DWG NOTE. REVISED VENT & DRAIN SYMBOLS INCORPORATE ECA 98/118061A REVD CONTINUATION REFS, ADDED NOTE 7.
1	5/16/86	OPD	JDM	WFD	ADDED NOTE 6 AND REVISED CONTINUATIONS
0	1/13/86	DWS	TAK	WFD	ISSUED FOR OPERATIONS

REF. DRAWING NO.	REV	TITLE
9763-F-202481	6	CIRCULATING WATER P & ID
9763-F-202077	18	COND. SYS. P&ID SHT 1

FPL ENERGY Seabrook Station

CONDENSATE SYSTEM DETAIL

PID- 1-CO-B20422

04/14/05

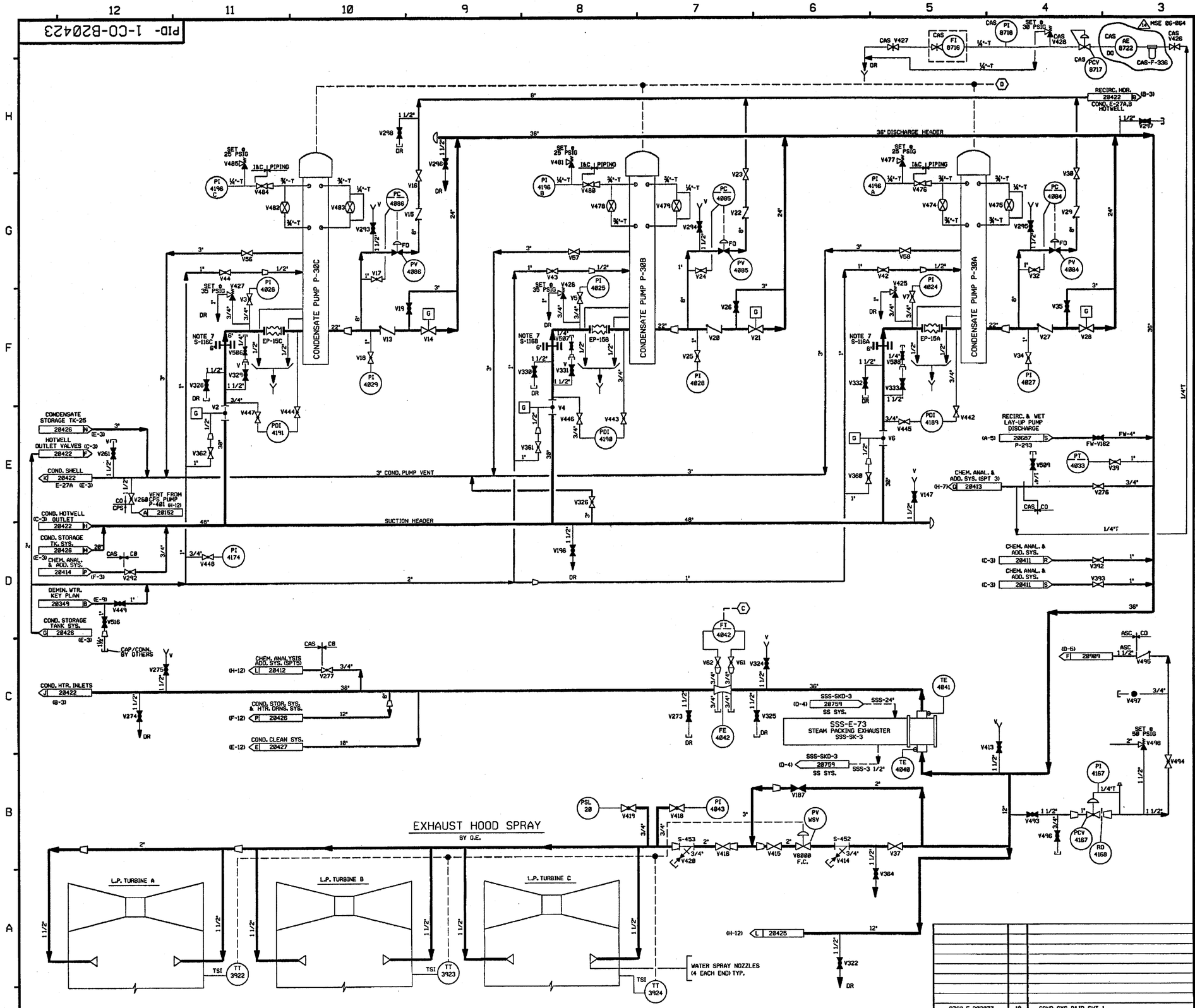

FOR P&ID REFERENCE DRAWINGS, SYMBOLS AND ABBREVIATIONS REFER TO DRAWINGS P&ID - LEGEND 1 AND P&ID - LEGEND 2

NOTES:

1. WORK THIS DRAWING WITH DRAWINGS 28428, 28422 & 28424 THRU 28427.
2. ALL LINES, EQUIPMENT, COMPONENTS AND INSTRUMENTS HAVE SYSTEM PREFIX CO, UNLESS NOTED OTHERWISE.
3. ALL LINES, EQUIPMENT, COMPONENTS AND INSTRUMENTS ARE SAFETY CLASS NNS, UNLESS NOTED OTHERWISE.
4. INSTRUMENTATION REFERENCES:
   - (C) TO COND. STORAGE SYS., 1-CO-FV-4042 ON DWG. 28428.
   - (D) TO FEEDWATER PUMP SUCTION 1-CO-PSL-4034 & 4035 DWG CO-28425.
5. △ - INDICATES REVISION LEVEL.
6. DELETED
7. PERMANENT SPOOL PIECE INSTALLATION IS SHOWN. SUCTION STRAINER IS USED DURING INITIAL OPERATION. STRAINER CAN BE REMOVED FOLLOWING CO SYSTEM CLEAN-UP.

REV	DATE	DSGN	CHKD	CE	DESCRIPTION
14	8/1/06	JM	MPW	MAP	INCORP MSE 06-064 REV 00
13	4/19/05	BCS	JM	BCS	INCORP DCR 97-13 DCN-00
12	5/16/02	JM	MPW	IW	INCORP MMOD 00-0533 DCN*00 & *05
11	2/4/02	BCS	JM	DEA	INCORP MSE 01-0174 REV. 00
10	7/26/00	MPW	DWS	RWM	INCORP MMOD 97-637 DCN 00
9	6/7/97	BCS	MPW	RCP	INCORP DCR 92-31 CA04
8	11/13/95	BCL	MPW	RRC	REVISED PER ISO CO-4053-34
7	5/18/95	BCL	MPW	RCP	INCORP DCR 92-31 CA0 & 03
6	5/2/94	BCL	MPW	JCM	INCORP DCR 92-24 CA0 & 1
5	8/19/93	MRB	BCL	RSG	INCORP MMOD 92-589 CA0
4	9/17/91	MRB	JM	IW	INCORP MMOD 90-647 CA02 & MMOD 89-616 CA0
3	12/29/89	MRB	APL	WFD	INCORPORATED DCR 89-47 CA02 REVISED NOTES 2 AND 3 ADDED SSS-SYSTEM INTERFACE FOR CLARITY
2	10/30/86	PAL	WRD	RRC	REVISED LINE SIZES TO EXH. HOOD SPRAY PER G.E. FP-29551. ADDED INSTRUMENTATION & LINE NO'S PER I&C P&ID. PI WAS PT IN ERROR. ADDED ZONE LOCATIONS TO FLAGS DELETED NOTE 6, UPDATED REV. BLOCK.
1	5/27/86	OPD	JDM	WFD	ADDED EXHAUST HOOD SPRAY AND CONTINUATIONS, NOTE 5 INCORP. CHG ITEM #1 PER 282077-R17
0	1/13/86	DWS	TAK	WFD	ISSUED FOR OPERATIONS

REF. DRAWING NO.	REV	TITLE
9763-F-282077	18	COND. SYS. P&ID SHT. 1

FPL ENERGY Seabrook Station

CONDENSATE SYSTEM DETAIL

PID- 1-CO-B20423

07/31/06

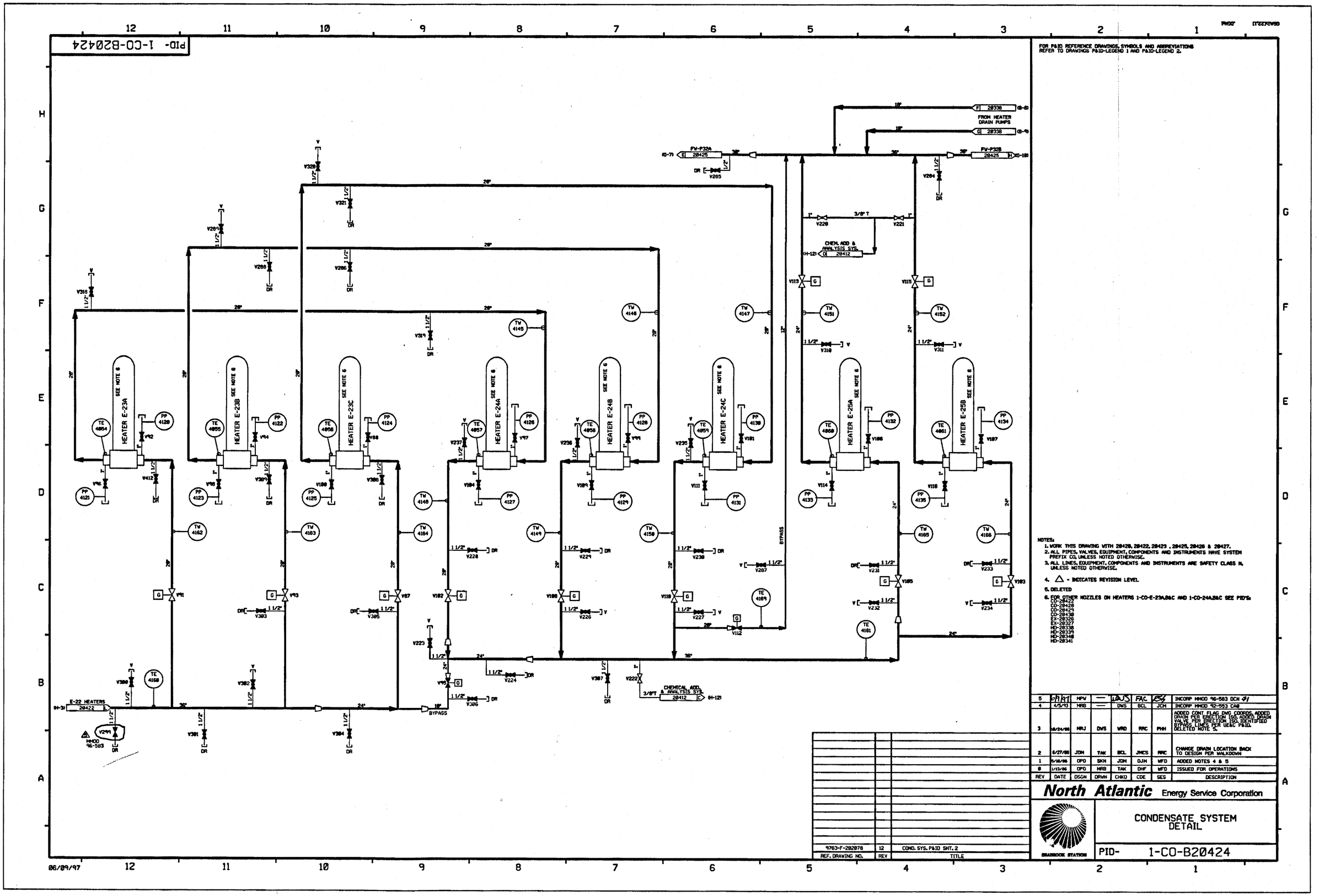

FOR P&ID REFERENCE DRAWINGS, SYMBOLS AND ABBREVIATIONS REFER TO DRAWINGS P&ID-LEGEND 1 AND P&ID-LEGEND 2.

NOTES:

1. WORK THIS DRAWING WITH 20420, 20422, 20423, 20425, 20426 & 20427.
2. ALL PIPES, VALVES, EQUIPMENT, COMPONENTS AND INSTRUMENTS HAVE SYSTEM PREFIX CO, UNLESS NOTED OTHERWISE.
3. ALL LINES, EQUIPMENT, COMPONENTS AND INSTRUMENTS ARE SAFETY CLASS N, UNLESS NOTED OTHERWISE.
4. △ - INDICATES REVISION LEVEL
5. DELETED
6. FOR OTHER NOZZLES ON HEATERS 1-CO-E-23A,B&C AND 1-CO-24A,B&C SEE PID'S:
   CO-20422
   CO-20428
   CO-20429
   CO-20430
   EX-20326
   EX-20327
   HD-20338
   HD-20339
   HD-20340
   HD-20341

REV	DATE	DSGN	DRWN	CHKD	CDE	SES	DESCRIPTION
5	6/9/97	MPW	—	DWS	FAC	[illegible]	INCORP MMOD 96-583 DCN #1
4	4/5/93	MRB	—	DWS	BCL	JCM	INCORP MMOD 92-553 CA0
3	10/24/86	MRJ	DWS	WRD	RRC	PHH	ADDED CONT FLAG DWG COORDS, ADDED DRAIN PER ERECTION ISO. ADDED DRAIN VALVE PER ERECTION ISO. IDENTIFIED BYPASS LINES PER UE&C P&ID. DELETED NOTE 5.
2	6/27/86	JDM	TAK	BCL	JMCS	RRC	CHANGE DRAIN LOCATION BACK TO DESIGN PER WALKDOWN
1	5/16/86	OPO	SKN	JDM	DJM	WFD	ADDED NOTES 4 & 5
0	1/13/86	OPO	MRB	TAK	DHF	WFD	ISSUED FOR OPERATIONS

REF. DRAWING NO.	REV	TITLE
9763-F-202078	12	COND. SYS. P&ID SHT. 2

North Atlantic Energy Service Corporation

SEABROOK STATION

CONDENSATE SYSTEM DETAIL

PID- 1-CO-B20424

PID- 1-CO-B20425

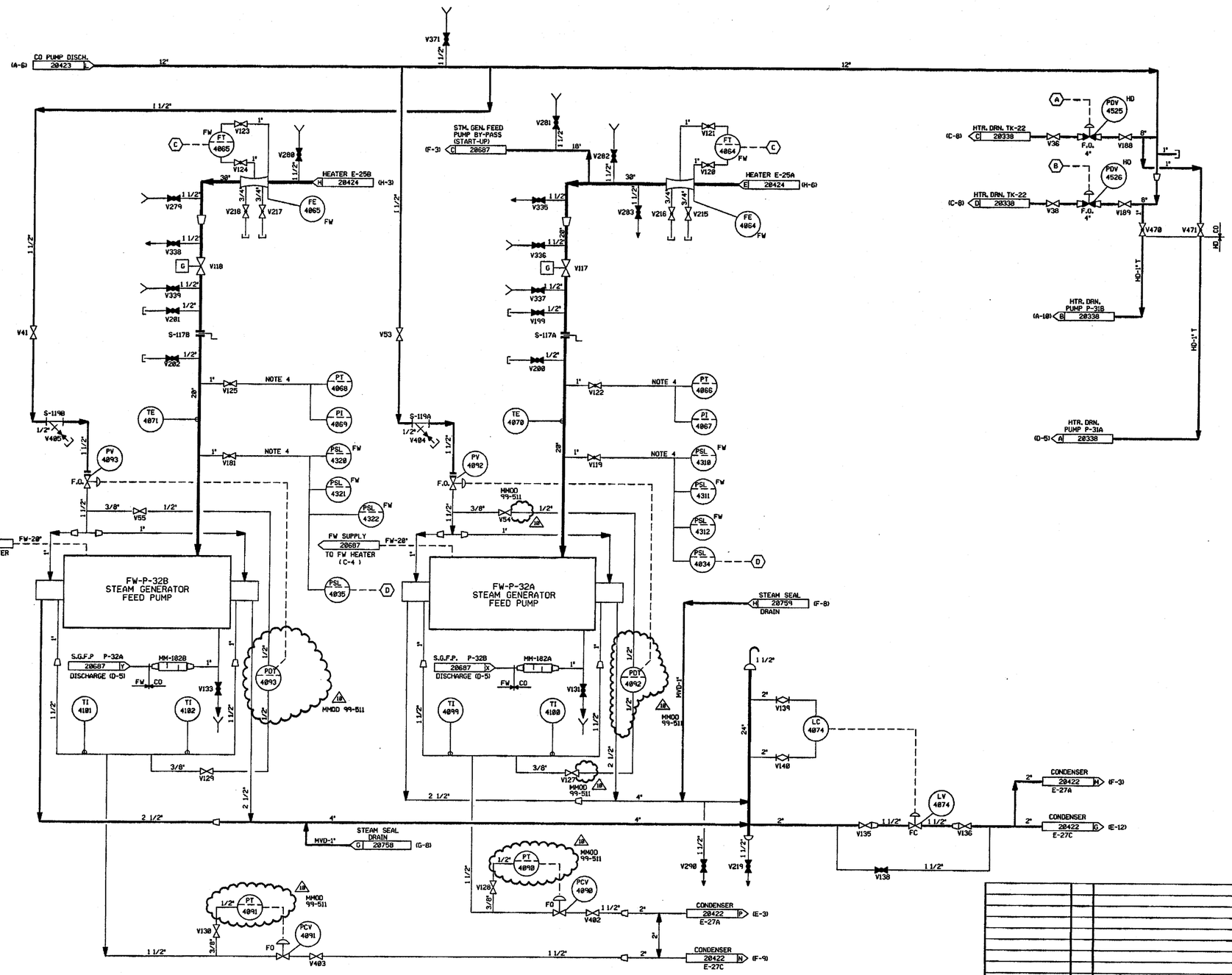

FOR P&ID REFERENCE DRAWINGS, SYMBOLS AND ABBREVIATIONS REFER TO DRAWINGS P&ID - LEGEND 1 AND P&ID - LEGEND 2

NOTES:

1. WORK THIS DRAWING WITH DRAWINGS 20420, 20422, 20423, 20424, 20426 THRU 20438.
2. ALL LINES, EQUIPMENT, COMPONENTS AND INSTRUMENTS HAVE SYSTEM PREFIX CO UNLESS NOTED OTHERWISE.
3. ALL LINES, EQUIPMENT, COMPONENTS AND INSTRUMENTS ARE SAFETY CLASS NNS, UNLESS NOTED OTHERWISE.
4. REFERENCE TEST LOOP DWGS. FOR VALVE I.D.
5. INSTRUMENTATION REFERENCES:
   - (A) FROM HD-PDY-4525-2 LOCATED IN HD-CP-551.
   - (B) FROM HD-PDY-4526-2 LOCATED IN HD-CP-551.
   - (C) TO RECIRCULATING VALVES FV-4064 & 4065.
   - (D) TO CONDENSATE PUMP MOTORS 1-CO-P-30A, B&C ON DWG. CO-20423.
6. △- INDICATES REVISION LEVEL

REV	DATE	DSGN	DRWN	CHKD	CDE	SES	DESCRIPTION
10	11/11/00	MPW	—	NDB	DWS	SES	INCORP MMOD 99-511 DCN 00
9	8/11/94	MRB	—	BCL	DWS	GRM	INCORP MMOD 92-553 CA01
8	11/16/92	MRB	—	BCL	DWS	IW	INCORP MMOD 91-552 CA0 & DCR 9040 CA1
7	4/20/92	MRB	—	BCL	DWS	RRB	INCORP MMOD 91-622 CA0
6	9/17/91	MRB	FCB	JM	GPM	IW	INCORP. MMOD 90-647 CA0
5	8/2/90	MRB	RMC	FCB	DWS	WFD	INCORP. DCR 89-47 CA14
4	5/5/89	MRB	JM	GPM	PAL	GRM	REVISED: NOTES 2,3&5, PIPING TO CLARIF DUPLICATION OF ASSOC. SYSTEMS & INTERFACES. ADDED: CONT. COORDS.
3	3/4/87	OPO	TAK	MRJ	BCL	RRC	REVISED CONTINUATION REFERENCE, ADDED P&ID LEGEND REF NOTE.
2	9/17/86	BCL	TAK	MAP	VNK	RRC	ADDED DRAIN & VENT SYMBOLS. ADDED CONTINUATION REFERENCES. REV'D TO INC. PIPING ERECTION ISO. 1-CO-4049-57
1	5/16/86	OPO	SKN	JDM	DFM	WFD	ADDED CONTINUATIONS & NOTE 6.
0	1/13/86	DWS	MRB	TAK	DHF	WFD	ISSUED FOR OPERATIONS

REF. DRAWING NO.	REV	TITLE
9763-F-202083	14	HTR. DRN. SYS. P&ID SHT. 2 OF 2
9763-F-202089	10	COND. CLEANING & CHEM. FEED SYS. P&ID
9763-F-202078	11	COND. SYS. P&ID SHT. 2
9763-F-202077	16	COND. SYS. P&ID SHT. 1

North Atlantic Energy Service Corporation

SEABROOK STATION

CONDENSATE SYSTEM DETAIL

PID- 1-CO-B20425

11/11/00

PID- 1-CO-B20426

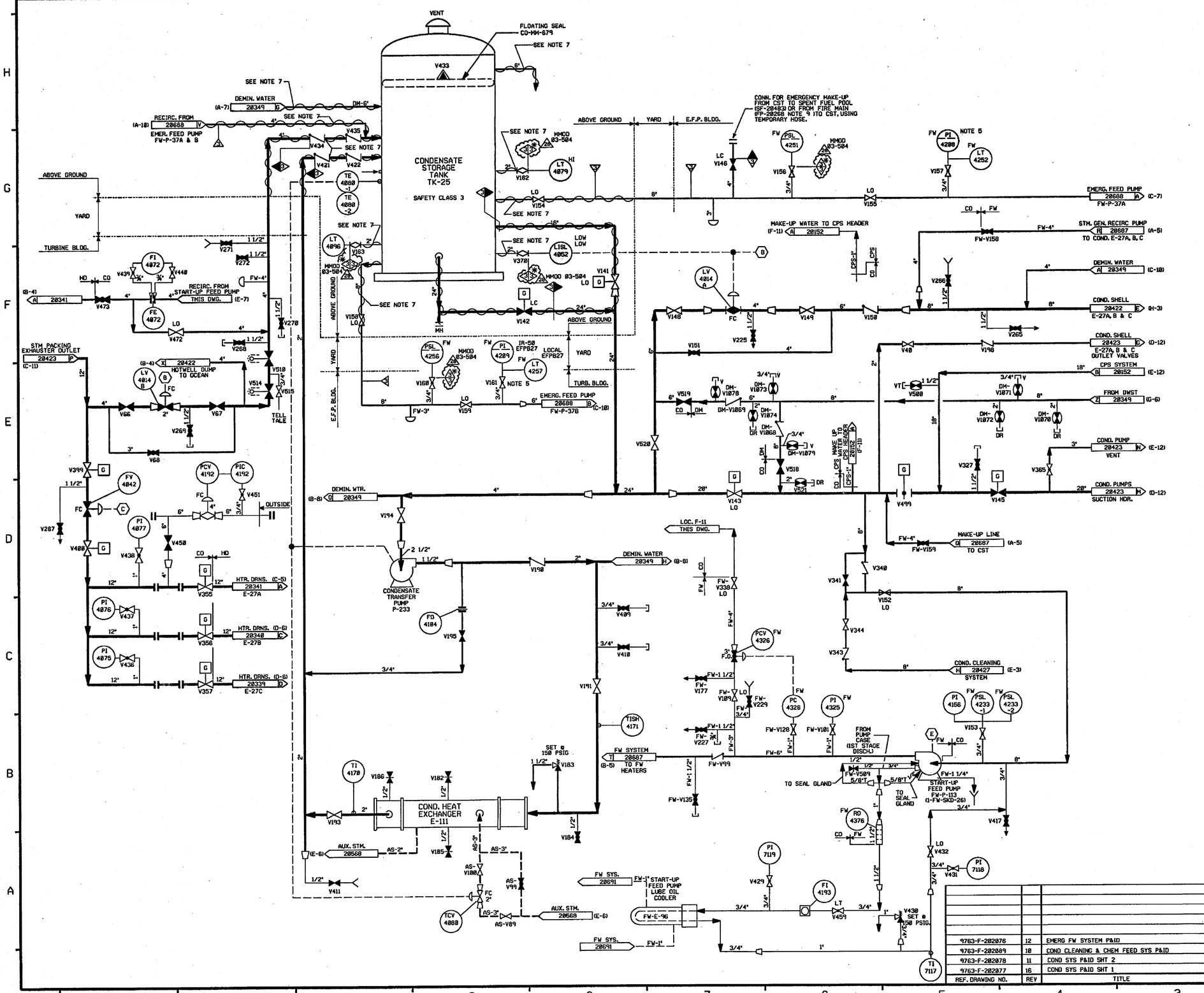

FOR P&ID REFERENCE DRAWINGS, SYMBOLS AND ABBREVIATIONS REFER TO DRAWINGS P&ID - LEGEND 1 AND P&ID - LEGEND 2

NOTES:

1. WORK THIS DRAWING WITH DRAWINGS 20420, 20422, 20423, 20424, 20425 & 20427.
2. ALL LINES, VALVES, EQUIPMENT, COMPONENTS AND INSTRUMENTATION HAVE SYSTEM PREFIX CO, UNLESS NOTED OTHERWISE.
3. ALL LINES, EQUIPMENT, COMPONENTS AND INSTRUMENTS ARE SAFETY CLASS NNS, UNLESS NOTED OTHERWISE.
4. INSTRUMENTATION REFERENCES:
   - (B) TO COND HOTWELL, 1-CO-LT-4010, 4011, 4012 DWG 20422.
   - (C) TO STEAM PACKING EXHAUSTER VENTURI, 1-CO-FT-4042 ON DWG 20423.
   - (E) LUBE OIL PIPING FROM FW-P-161
5. REF TEST LOOP DIAGRAM FOR VALVE I.D..
6. △ - INDICATES REVISION LEVEL.
7. HEAT TRACING HAS BEEN DISCONNECTED AND IS NONFUNCTIONAL.

PORTIONS OF THIS DRAWING ARE

NUCLEAR SAFETY RELATED

REV	DATE	DSGN	CHKD	CE	DESCRIPTION
28	[illegible]	JM	BCS	[illegible]	INCORP MMOD 03-584 DCN 00
27	4/30/05	BCS	JM	DJM	INCORP. DCR 97-013 DCN 00, 174 INCORP. DCR 04-004 DCN-00 & 06
26	11/24/03	BCS	MPW	HWM	INCORP CR 03-05429
25	10/14/03	MPW	BCS	SAK	PARTIAL INCORP. DCR 97-013 DCN 00
24	7/11/02	MPW	JM	IW	INCORP. DCR 95-038 DCN 00 & 38 MMOD 00-533 DCN 00
23	3/14/02	JM	MPW	DJM	INCORP MSE 00-189 REV. 0
22	10/01/01	BCS	MPW	DJM	INCORP MSE 00-233 REV. 0
21	6/9/99	DWS	RWS	DJM	INCORP MMOD 97-618 DCN#00
20	1/2/98	DRL	MPW	VWS	INCORP MMOD 96-550 DCN 02

REF. DRAWING NO.	REV	TITLE
9763-F-202076	12	EMERG FW SYSTEM P&ID
9763-F-202089	10	COND CLEANING & CHEM FEED SYS P&ID
9763-F-202078	11	COND SYS P&ID SHT 2
9763-F-202077	16	COND SYS P&ID SHT 1

FPL ENERGY Seabrook Station

CONDENSATE SYSTEM DETAIL

PID- 1-CO-B20426

11/01/06

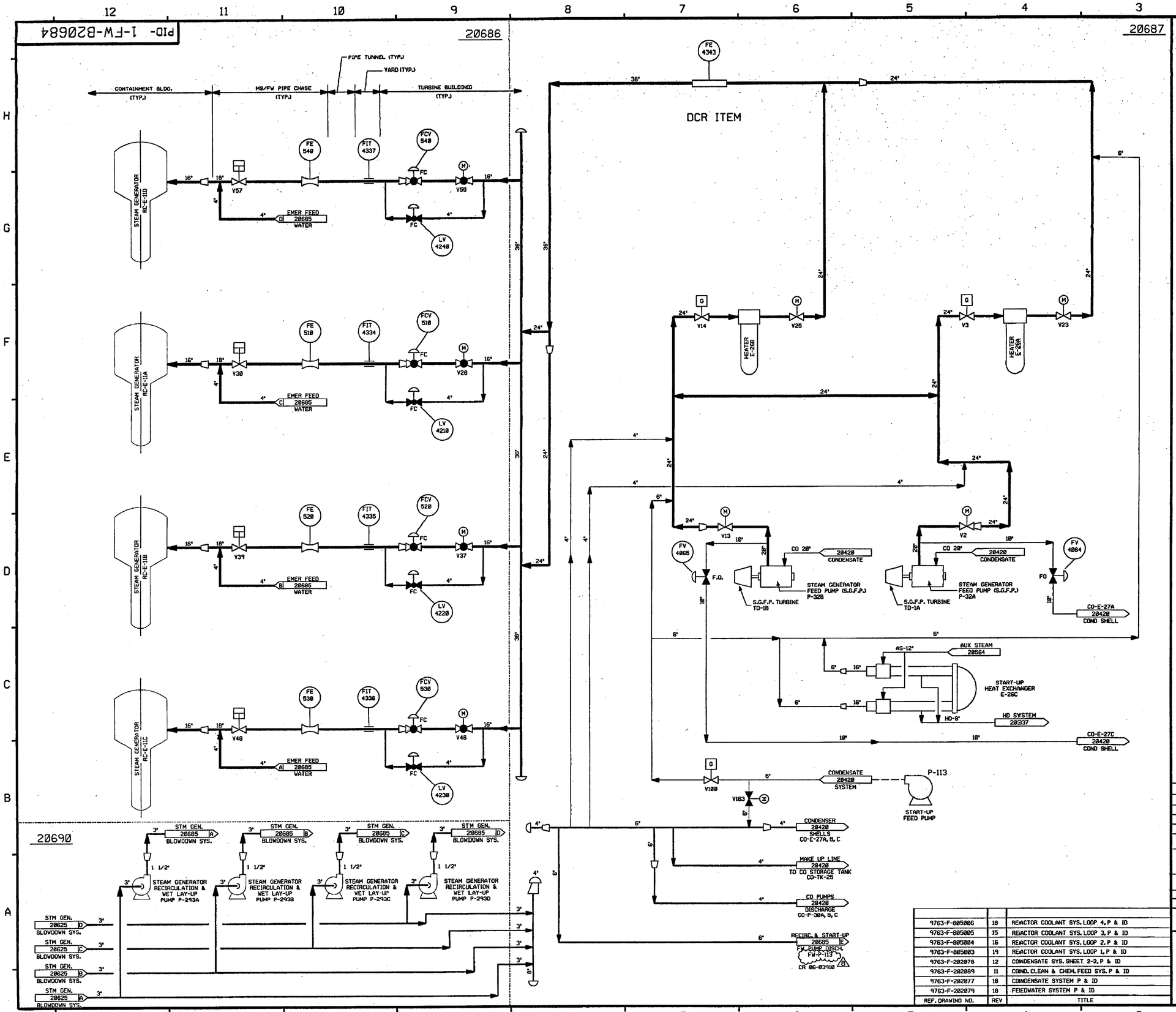

NOTES:

1. ALL LINES, EQUIPMENT, COMPONENTS & INSTRUMENT TAG NOS. ARE PREFIXED BY DESIGNATION "1-FW" UNLESS OTHERWISE NOTED.
2. WORK THIS DRAWING WITH 20685 THRU 20689.
3. △ INDICATES REVISION LEVEL.

REV	DATE	DSGN	CHKD	CE	DESCRIPTION
8	11-20-06	BCS	JM	RCB	INCORP.CR 06-03910 REV. 0
7	10/9/98	BCS	JM	RCD	INCORP. DCR 04-015 DCN-00
6	5/19/03	BCS	MPW	JM	INCORP.CR 03-04229 REV. 0
5	6/18/97	MPW	DWS	GRM	INCORP. DCR 95-39 CA 00 & 29
4	4/16/97	MPW	BCS	JCM	INCORP. MMDD 96-544 CA 0
3	7/18/94	MPW	BCL	WNF	INCORPORATED DCR 86-0420 CA 0 AND DCR 92-0067 CA 0
2	6/21/89	GPM	MRB	ICW	REVISED: VALVE NUMBER FROM FW-V33 TO FW-V39 PER UE & C P & ID 20207%, NOTE 1
1	1/29/87	MPW	WRD	VWS	ADDED NOTE 3 REVISED PER LATEST SYSTEM DRAWINGS.
0	2/25/86	WAL	DWS	WFD	ISSUED FOR OPERATIONS

REF. DRAWING NO.	REV	TITLE
9763-F-805006	18	REACTOR COOLANT SYS. LOOP 4, P & ID
9763-F-805005	15	REACTOR COOLANT SYS. LOOP 3, P & ID
9763-F-805004	16	REACTOR COOLANT SYS. LOOP 2, P & ID
9763-F-805003	19	REACTOR COOLANT SYS. LOOP 1, P & ID
9763-F-202076	12	COINDENSATE SYS. SHEET 2-2, P & ID
9763-F-202089	11	COND. CLEAN & CHEM. FEED SYS. P & ID
9763-F-202077	18	COINDENSATE SYSTEM P & ID
9763-F-202079	18	FEIEDWATER SYSTEM P & ID

FPL ENERGY Seabrook Station

FEEDWATER SYSTEM OVERVIEW

PID- 1-FW-B20684

11/15/06

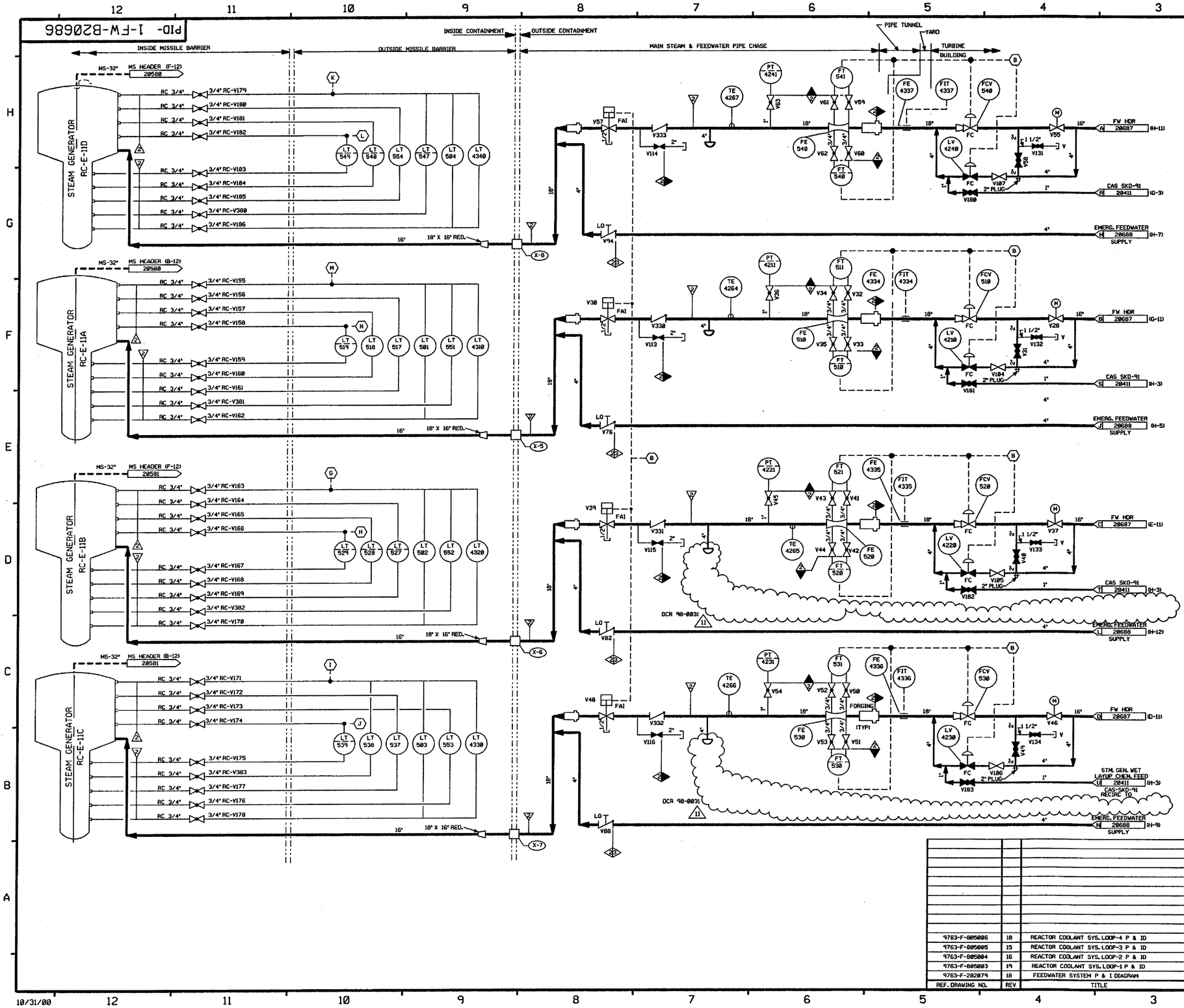

FOR P&ID REFERENCE DRAWINGS, SYMBOLS AND ABBREVIATIONS REFER TO DRAWINGS P&ID-LEGEND 1 AND P&ID-LEGEND 2.

NOTES:

1. PIPING, VALVES, EQUIPMENT & INSTRUMENT TAG NOS. ARE PREFIXED BY DESIGNATION "1-FW", UNLESS OTHERWISE NOTED.
2. WORK THIS DWG. WITH 20684, 20685, 20687 & 20688.
3. INSTRUMENT IDENTIFICATION
   - (B) PROTECTION SYS. FW ISOLATION SIGNAL.
   - (G) TO FT-523 ON DWG. 1-MS-20581
   - (H) TO FT-522 ON DWG. 1-MS-20581
   - (I) TO FT-533 ON DWG. 1-MS-20581
   - (J) TO FT-532 ON DWG. 1-MS-20581
   - (K) TO FT-542 ON DWG. 1-MS-20580
   - (L) TO FT-543 ON DWG. 1-MS-20580
   - (M) TO FT-512 ON DWG. 1-MS-20580
   - (N) TO FT-513 ON DWG. 1-MS-20580
4. VENTS, DRAINS AND TEST CONNECTION CODE BREAKS ARE AT THE DOWNSTREAM END OF THE OUTER ISOLATION VALVE PER 1-NHY-805111, UNLESS NOTED OTHERWISE.

PORTIONS OF THIS DRAWING ARE

NUCLEAR SAFETY RELATED

REV	DATE	DSGN	DRWN	CHKD	CDE	SES	DESCRIPTION
11	11-8-00	BCS	—	MPW	WDS	RFB	INCORP. DCR 98-31 DCN 00
10	4/27/99	RWS	—	BCS	DWS	HWM	INCORP. DCR 98-0028 DCN 00
9	5/02/98	DRL	—	BCS	MPW	VNS	INCORP. MMOD 97-521 DCN 00
8	11/27/95	MPW	—	BCS	RRC	HWM	INCORP. DCR 95-42 CA0
7	7/19/94	BCL	—	DWS	MPW	WHF	INCORP. MMOD 92-67 CA0
6	3/11/94	MRB	—	BCL	DWS	GRM	INCORP. MMOD 92-553 CA01
5	4/29/92	MRB	—	BCL	DWS	RRB	INCORP. MMOD 91-515 CA0
4	9/27/89	GPM	RMC	APL	MPW	—	REVISED: PIPING TO CLARIFY DUPLICATION OF ASSOCIATED SYSTEMS AND INTERFACES LOC OF CLASS BREAK FOR CLARIFICATION. ADDED: NOTE 4 DELETED: NNS-1 CL BOUNDARY
3	11/4/86	JDM	DWS	WRD	BCL	RRC	CORRECTED INSTR CONN PER REVIEW OF DWG B20686. ADDED LEGEND NOTE & CONT DWG COORD'S. UPDATED REF DWG REVS.
2	8/22/86	JDM	DWS	WRD	VNK	PHH	REVD TO REFLECT AS-BUILT CONFIG.
1	6/16/86	TAK	OPD	DWS	JMS	RRC	ECA 85/103386B
0	2/24/86	WAL	SKN	DWS	JWK	WFD	ISSUED FOR OPERATIONS

REF. DRAWING NO.	REV	TITLE
9763-F-805006	18	REACTOR COOLANT SYS. LOOP-4 P & ID
9763-F-805005	15	REACTOR COOLANT SYS. LOOP-3 P & ID
9763-F-805004	16	REACTOR COOLANT SYS. LOOP-2 P & ID
9763-F-805003	14	REACTOR COOLANT SYS. LOOP-1 P & ID
9763-F-202079	18	FEEDWATER SYSTEM P & I DIAGRAM

North Atlantic Energy Service Corporation

SEABROOK STATION

FEEDWATER SYSTEM DETAILS

PID- 1-FW-B20686

10/31/00

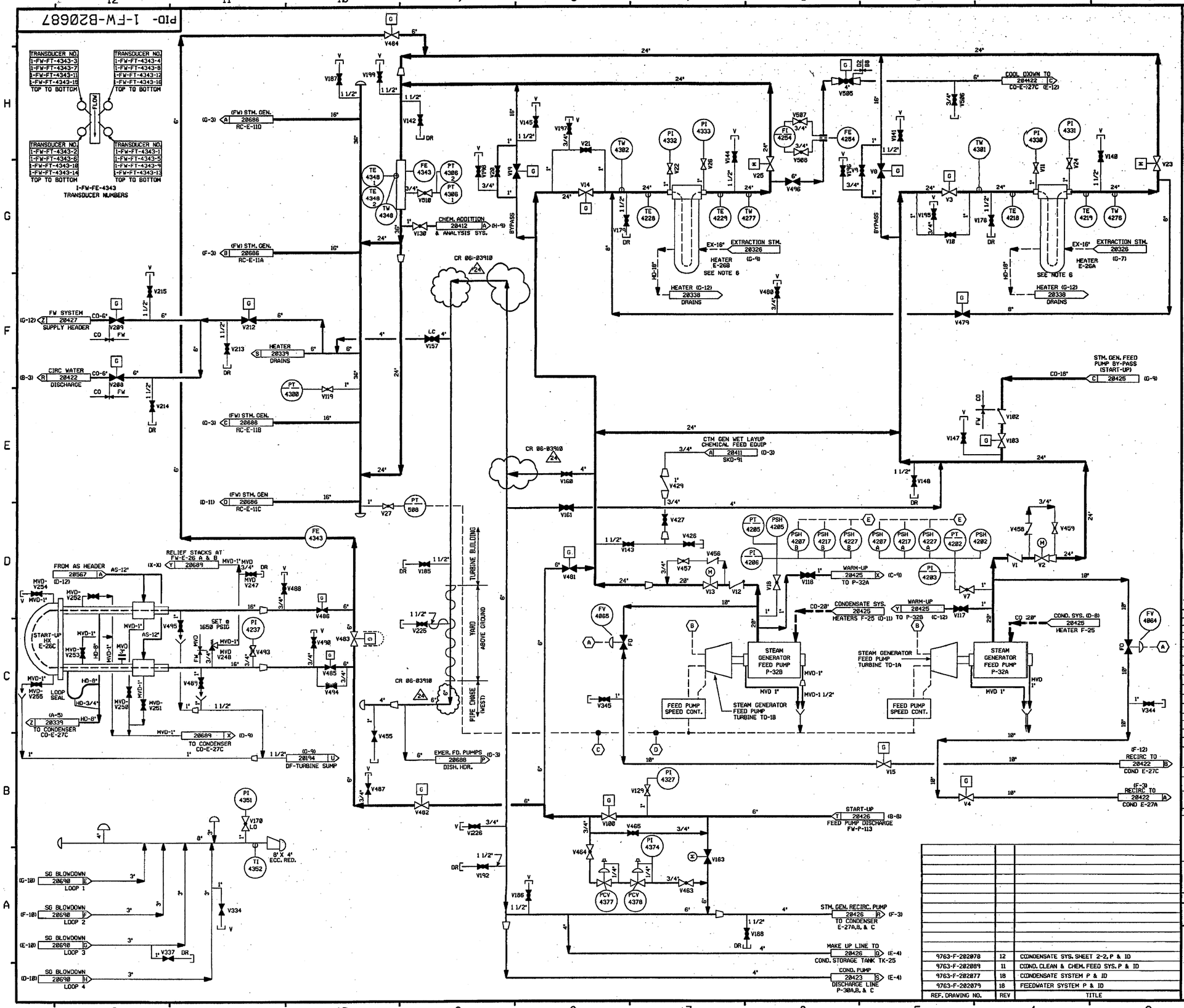

FOR P&ID REFERENCE DRAWINGS, SYMBOLS AND ABBREVIATIONS REFER TO DRAWINGS P&ID - LEGEND 1 AND P&ID - LEGEND 2.

NOTES:

1. WORK THIS DRAWING WITH 20684 THRU 20686 & 20688, 20689 & 20990.
2. ALL LINES, EQUIPMENT, COMPONENTS AND INSTRUMENTS HAVE SYSTEM PREFIX "FW", UNLESS OTHERWISE NOTED.
3. INSTRUMENT REFERENCES:
   - (A) FEEDWATER PUMP FLOW (LOW)
   - (B) PROTECTION SYS. FW ISOLATION SIGNAL
   - (C) MAIN STEAM HEADER PRESSURE
   - (D) TOTAL STEAM FLOW
   - (E) TRIPS FEEDWATER PUMPS ON 2/3 HIGH PRESSURE
4. ALL LINES, EQUIPMENT, COMPONENTS & INSTRUMENTS ARE SAFETY CLASS NNS, UNLESS OTHERWISE NOTED.
5. △ INDICATES REVISION LEVEL.
6. FOR OTHER NOZZLES ON HEATERS 1-FW-E-26AAB SEE PID'S:
   EX-20326
   FW-20689
   HD-20338
   MD-20475

REV	DATE	DSGN	CHKD	SES	DESCRIPTION
24	11-20-06	BCS	JM	RCB	INCORP CR 06-03910 REV. 0
23	10/09/06	BCS	JM	RCD	INCORP DCR 04-015 DCN 00
22	12/1/05	BCS	JM	HWM	INCORP. MMOD 05-518 DCN-03
21	2/14/02	MPW	BCS	DJM	INCORP. ECA 73/52780
20	10/6/00	DWS	MPW	JCM	INCORP MMOD 980694 DCN#00
19	4/11/99	RWS	BCS	MKC	INCORP DCR 97-0044 DCN 00
18	2/23/99	BCS	DWS	MKC	INCORP MMOD 98-636 DCN-00
17	9/16/97	BCS	MPW	GG	INCORP MMOD 96-594 DCN-0
16	7/17/97	MPW	BCS	GRM	INCORP DCR 95-39 DCN 49
15	6/18/97	MPW	DWS	GRM	INCORP DCR 95-39 CA 29 & DCN 39
14	4/16/97	MPW	BCS	JCM	INCORP MMOD 96-544 CA0
13	12/2/95	MPW	BCS	RJF	INCORP DCR 95-39 CA 0, 1 & 6
12	7/18/94	MPW	BCL	JCM	INCORP DCR 86-420 CA 0
11	4/5/93	MRB	DWS	JCM	INCORP MMOD 92-553 CA0
10	10/27/92	MRB	BCL	IW	INCORP DCR 91-57 CA0
9	9/2/92	MRB	DWS	DJM	INCORP. MMOD 90677 CA 5
8	4/20/92	DWS	BCL	DJM	INCORP. MMOD 90677 CA 1, 2 & 3
7	9/25/91	GPM	JM	DJM	INCORP. DCR 91-049 CA0 PARTIAL INCORP. OF MMOD 90-677 CA0 REVISED: NOTES 1, 2, 3 & 4
6	5/30/91	MRB	RMC	IW	INCORPORATED MMOD 90-588 CA0
5	3/29/90	MRB	APL	RSG	INCORPORATED DCR 89-21 CA REVISED INSTR. PER SIS VERIFICATION
4	10/30/87	MPW	BCL	PAS	REV'D NOTE 2.4 DWG. CONT. DELETED: DUPLICATED VALVES, PIPING & ECA IN ILISUPERCEDED BY DCR 86-420
3	5/14/87	MPW	DWS	MJY	INCORP DCR 87-176.
2	10/9/86	PAL	MAP	RRC	REVISED PER UE&C P&ID. ADDED NOTE 5. REVISED TO CLARIFY DUPLICATION OF SYSTEMS. REINCORP. ECA 99/112343A. ADDED LOCA. DESIGNATION TO CONTINUATIONS. REV'D SIZE OF FV-4064 & FV-4065 FROM 8" TO 10". DELETED VENTS (V136,137,138,139) PER ECA 19/113318E. EXPANDED SB INTAKE HEADER AREA FOR CLARITY.
1	8/29/86	DWS	JDM	RRC	INCORP. ECA 19/8827298 99/112343A AND 99/118883A. CORRECTED PUMP NO. 293. APPRV'D CHANGE ITEM #1 PER 20287S REV. 18
0	02/24/86	WAL	DWS	WFD	ISSUED FOR OPERATIONS

REF. DRAWING NO.	REV	TITLE
9763-F-202078	12	CONDENSATE SYS. SHEET 2-2, P & ID
9763-F-202069	11	COND. CLEAN & CHEM. FEED SYS. P & ID
9763-F-202077	18	CONDENSATE SYSTEM P & ID
9763-F-202079	18	FEEDWATER SYSTEM P & ID

FPL ENERGY Seabrook Station

FEEDWATER SYSTEM DETAILS

PID- 1-FW-B20687

11/15/06

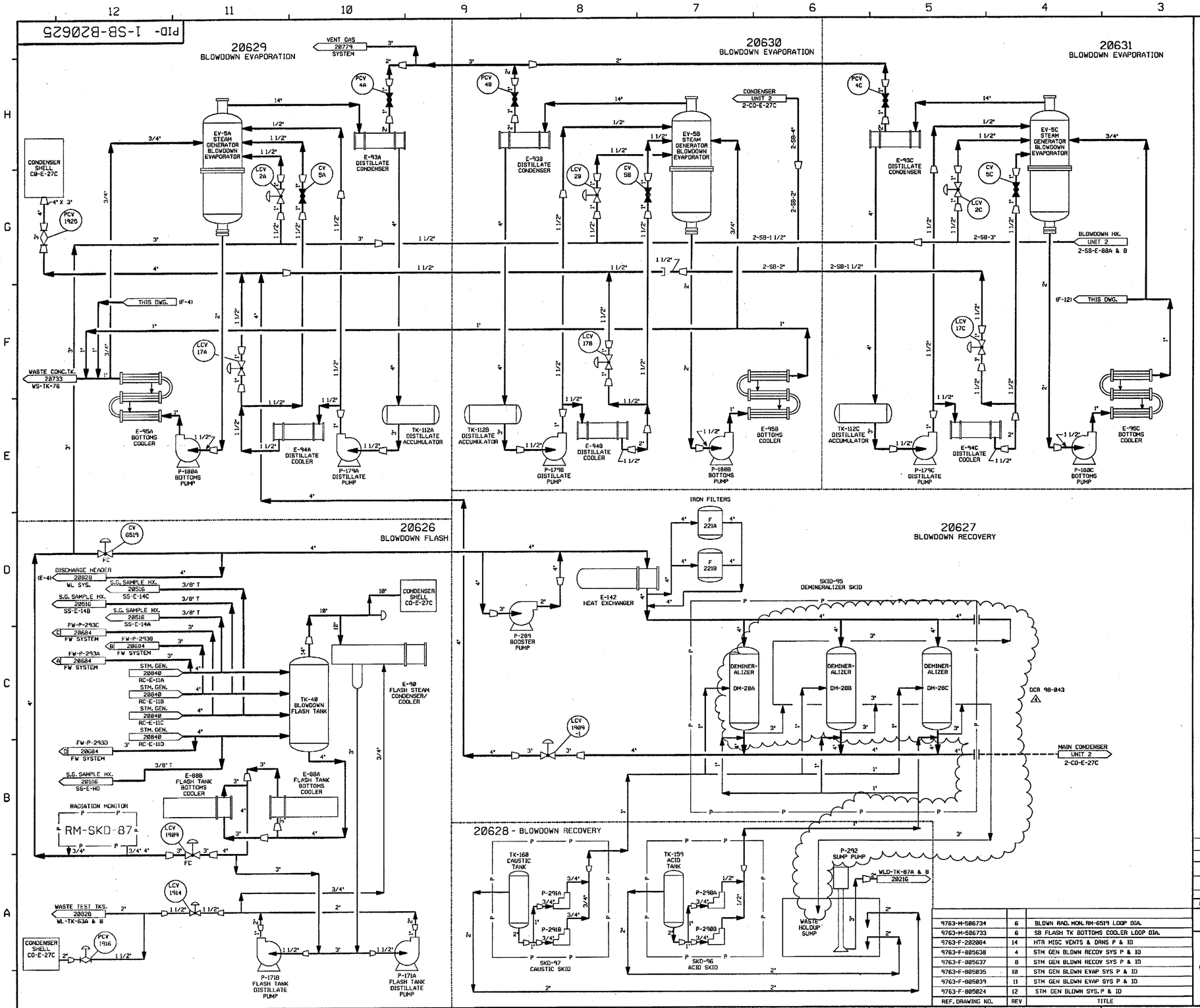

FOR P&ID REFERENCE DRAWINGS, SYMBOLS AND ABBREVIATIONS REFER TO DRAWINGS P&ID - LEGEND 1 AND P&ID - LEGEND 2

NOTES:

1. WORK THIS DRAWING WITH DRAWINGS 20626 THRU 20631.
2. ALL LINES, EQUIPMENT, COMPONENTS AND INSTRUMENTS HAVE SYSTEM PREFIX SB, UNLESS NOTED OTHERWISE.
3. △ INDICATES REVISION LEVEL

REF. DRAWING NO.	REV	TITLE
9763-M-506734	6	BLDWN RAD. MON. RM-6519 LOOP DIA.
9763-M-506733	6	SB FLASH TK BOTTOMS COOLER LOOP DIA.
9763-F-202084	14	HTR MISC VENTS & DRNS P & ID
9763-F-805638	4	STM GEN BLDWN RECOV SYS P & ID
9763-F-805637	8	STM GEN BLDWN RECOV SYS P & ID
9763-F-805035	10	STM GEN BLDWN EVAP SYS P & ID
9763-F-805039	11	STM GEN BLDWN EVAP SYS P & ID
9763-F-805024	12	STM GEN BLDWN SYS. P & ID

REV	DATE	DSGN	CHKD	CE	DESCRIPTION
4	10/29/03	BCS	JH	RFP	INCORP DCR 98-0043 DCN-00
3	7/16/94	MPW	BCL	JCM	INCORP DCR 86-0420 CA 0
2	1/21/94	MRB	DWS	RSG	INCORP DCR 86-0174 CA-0 REVISED FOR DRAFTING ENHANCEMENTS
1	2/2/87	MPW	WRD	VWS	ADDED NOTE 3 REVISED PER LATEST SYSTEM DRAWINGS.
0	5/15/86	DBF	TAK	WFD	ISSUED FOR OPERATIONS

FPL ENERGY Seabrook Station

STEAM GENERATOR BLOWDOWN OVERVIEW

PID- 1-SB-B20625

10/28/03

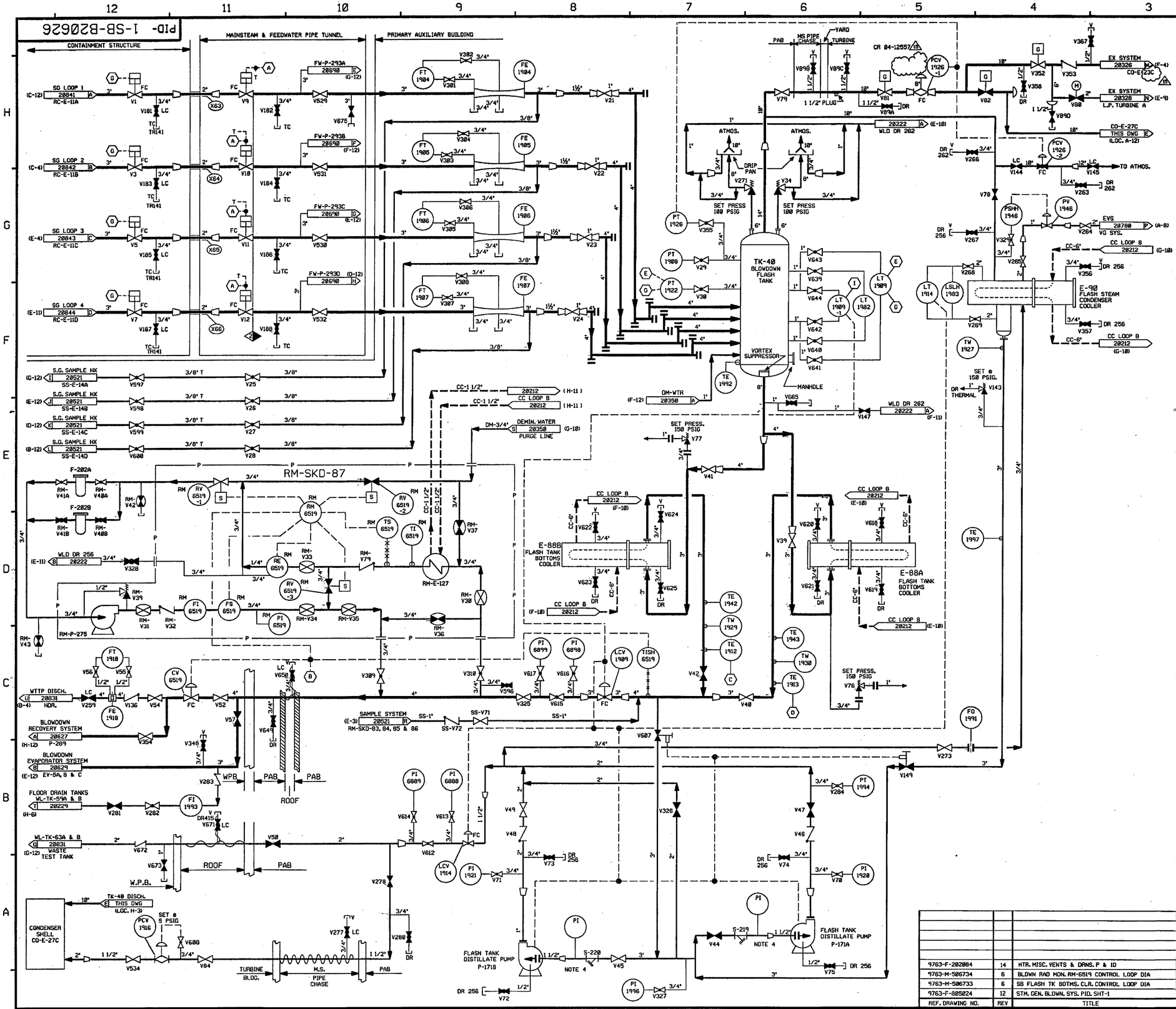

FOR P&ID REFERENCE DRAWINGS, SYMBOLS AND ABBREVIATIONS REFER TO DRAWINGS P&ID - LEGEND 1 AND P&ID - LEGEND 2

NOTES:

1. WORK THIS DRAWINGS 20625 AND 20627 THRU 20631.
2. ALL PIPING, VALVES, EQUIP. & INSTRUMENTS HAVE SYSTEM PREFIX SB, UNLESS NOTED OTHERWISE.
3. ALL PIPING, VALVES, EQUIPMENT & INSTRUMENTS ARE SAFETY CLASS NNS UNLESS NOTED OTHERWISE.
4. PROVIDE 3/4" PRESSURE TAP & PLUG FOR PI'S. START-UP ENGINEERING TO PROVIDE PIPING, VALVES & PI'S; ALSO STRAINER BLOW-OFF PIPING & VALVES FOR INITIAL OPERATION. STRAINER SCREEN TO BE REMOVED AFTER START-UP.
5. △ INDICATES REVISION LEVEL.
6. VENTS, DRAINS AND TEST CONNECTION CODE BREAKS ARE AT THE DOWNSTREAM END OF THE OUTER ISOLATION VALVE PER 1-NHY-805111, UNLESS NOTED OTHERWISE.
7. INSTRUMENT REFERENCES:
   - (A) FROM EMERGENCY FEEDWATER PUMPS, CLOSE SIGNAL TO SB-V3 THRU SB-V12. CR 04-12557 △13
   - (B) FROM RM-RM-6510 THRU 6513 INTERLOCK, DWG 20519 & RM-RM-6519. △13
   - (C) TO TCV-1912 (SB-E-88B OUTLET) ON DWG 20212.
   - (D) TO TCV-1913 (SB-E-88A OUTLET) ON DWG 20212.
   - (E) TO TCV-1922 (SB-E-90 OUTLET) ON DWG 20212.
   - (G) HI HI PR & HI HI LEVEL IN TK-40 TO SHUT SB-V1, V3, V5 & V7.
   - (I) TO LCV-1909-1 ON DWG 20627.

PORTIONS OF THIS DRAWING ARE

NUCLEAR SAFETY RELATED

REV	DATE	DSGN	CHKD	CE	DESCRIPTION
15	2/4/05	BCS	JM	RAB	INCORP.CR 04-12557 REV. 00
14	4/27/99	RWS	BCS	SPF	INCORP. DCR 98-0002 DCN 00
13	4/04/96	MPW	BCS	BAW	INCORP. MMOD 94-562 CA 0
12	7/18/94	MPW	BCL	JCM	INCORP. DCR 86-420 CA 0
11	8/25/93	MRB	BCL	JWB	INCORP. DCR 90-39 CA7
10	11/5/92	MRB	BCL	JCM	INCORP. DCR 90-44 CA0
9	7/22/92	MRB	BCL	RSG	INCORP. DCR 90-39 CA7
8	4/23/92	DWS	BCL	RSG	INCORP. MMOD 920616 CA3
7	4/16/92	MRB	BCL	GRM	INCORP DCR 90-39 CA6,02,03 & MMOD 91-515 CA0
6	1/15/91	MRB	JM	RSH	INCORP. MMOD 90-656 CA00, MMOD 90-648 CA00 AND DCR 86-271 CA00
5	5/18/90	MRB	JM	GRM	INCORP. MMOD 90-545 CA 0 ADDED INSTR. REFERENCE AS NOTE 7
4	9/27/88	GPM	APL	RRC	INCORP ECA 19/22978 ADDED LINE SIZE, NOTE 6 DELETED: REF DRAWINGS
3	12/15/87	PAL	BCL	PAS	INCORPORATED DCR 87-258, ADDED: VALVES V136 & V259 PER ERECTION ISO,COORDINATES, NOTE 5, & REF DWG NOTE, REFERENCE SYSTEMS SHOWN IN PHANTOM, REROUTED WALL TO SHOW V698 ON ROOF, REVISED NOTE 3 AND P & ID DRAWING CONT.
2	9/26/86	MAP	BCL	RRC	REVISED REF DWG REV, REVISED BLDG BOUNDARY IDENT. REVISED TO CLARIFY DESIGNATIONS TO STRAINERS & PUMPS PER ERECTION ISO'S, DELETED SPEC BREAKS, ADDED MANHOLE PER F.P.
1	6/24/86	DWS	VNK	RRC	CHANGE ITEMS 1 & 2 RESOLVED PER ECA 99/114785A. UPDATED PER UE&C P&ID. 805024-R12
0	5/15/86	DWS	TAK	WFD	99/114785A 99/111481B INCORP. NCR'S 82/1382A, 82/1215B

REF. DRAWING NO.	REV	TITLE
9763-F-202084	14	HTR. MISC. VENTS & DRNS. P & ID
9763-M-506734	6	BLDWN RAD MON. RM-6519 CONTROL LOOP DIA
9763-M-506733	6	SB FLASH TK BOTMS. CLR. CONTROL LOOP DIA
9763-F-805024	12	STM. GEN. BLDWN. SYS. PID. SHT-1

FPL ENERGY Seabrook Station

STEAM GENERATOR BLOWDOWN (BLOWDOWN FLASH) DETAIL

PID- 1-SB-B20626

02/01/05

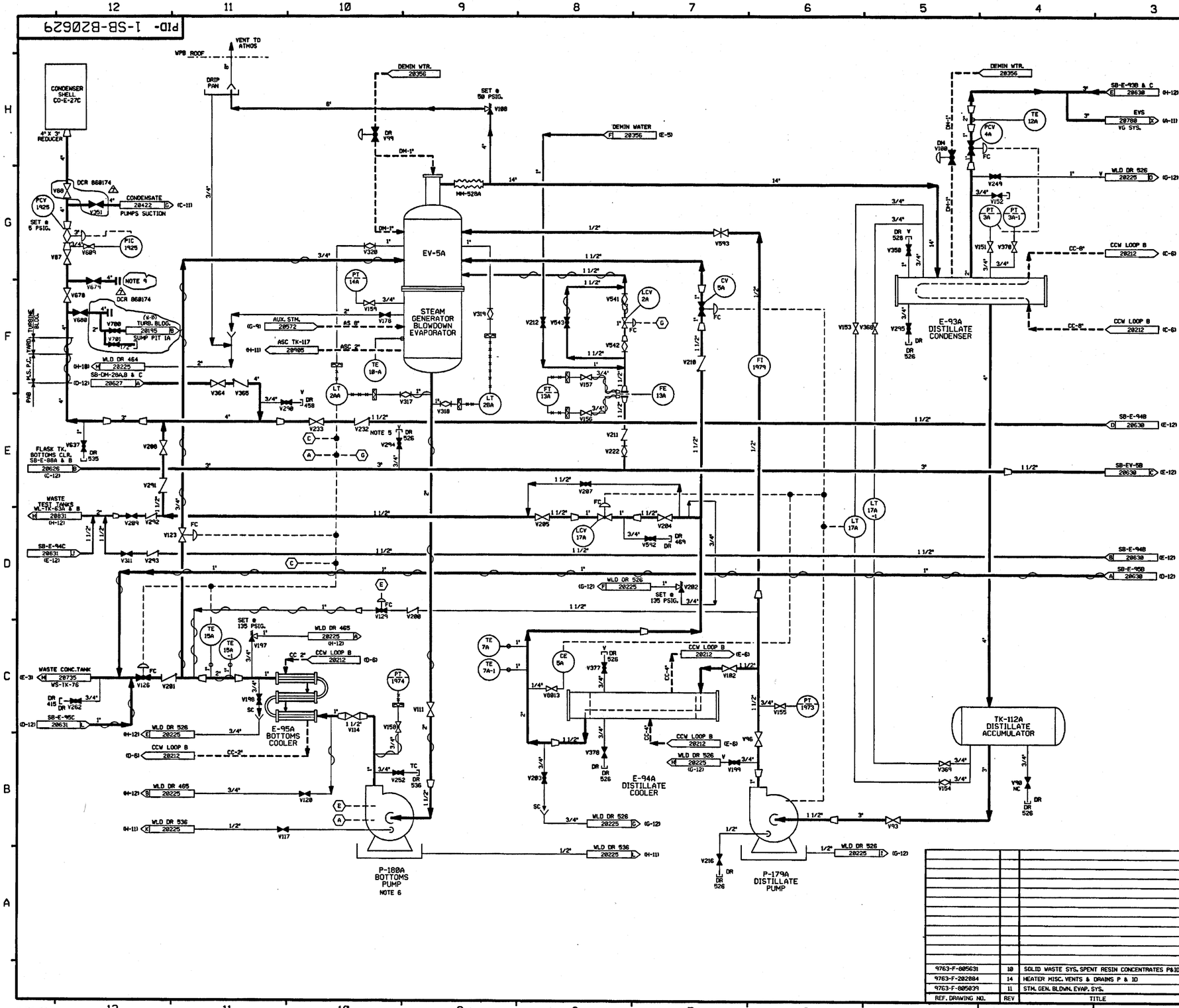

FOR P&ID REFERENCE DRAWINGS, SYMBOLS AND ABBREVIATIONS REFER TO DRAWINGS P&ID-LEGEND 1 AND P&ID-LEGEND 2.

NOTES:

1. WORK THIS DRAWING WITH DRAWINGS 20625 THRU 20628, 20630 & 20631.
2. ALL LINES, EQUIPMENT, COMPONENTS AND INSTRUMENTS HAVE SYSTEM PREFIX SB, UNLESS NOTED OTHERWISE.
3. ALL LINES, EQUIPMENT, COMPONENTS AND INSTRUMENTS ARE SAFETY CLASS NNS, UNLESS NOTED OTHERWISE.
4. FLUSH AND CHEMICAL ADDITION CONNECTION.
5. NITROGEN PURGE CONNECTION FOR DRY LAY-UP
6. SEE DRAWING 20353 FOR WATER SUPPLY TO PUMP DOUBLE MECHANICAL SEALS.
7. △ INDICATES REVISION LEVEL.
8. INSTRUMENTATION REFERENCES
   - (A) LOW LOW EV-5A INTERLOCK WITH P-180A
   - (C) HIGH E-95A OUTLET TEMP., HIGH WS-TK-76 LEVEL AND LOW DISCHARGE EV-5A INTERLOCK.
   - (E) DISTILLATE FLUSH V129, P-180A.
   - (G) EV-5A HI HI LVL. LCV-2A INTERLOCK.
9. CONNECTION FOR TEMPORARY CST FILL LINE.

DCR 860174 △7

REV	DATE	DSGN	DRWN	CHKD	CDE	SES	DESCRIPTION
7	11/13/93	BCL	—	PRJS	MHW	RSG	INCORP DCR 860174 CA#8
6	4/28/92	DWS	—	BCL	MRB	RSG	INCORP. MMOD 90-616 CA8
5	12/18/91	MRB	FCB	JM	GPM	GRM	INCORP. MMOD 90-616 CA8 AND DCR 86-634 CA6; ADDED NOTE 8
4	3/24/90	MRB	FCB	DSB	APL	DJM	INCORP MMOD 90-549 CA2
3	9/18/87	MRJ	HIW	BCL	MPW	RRC	RESOLVED CHANGE ITEM △3 ADDED: LINE SIZES, NOTE 7, CORRECTED DRAFTING ERROR, REVISED INSTR CONN PER EXISTING FIELD CONFIGURATION, & NOTE 3. INCORP: DCR 86-587, ECA 03/10761C. DELETED: DUPLICATION OF ASSOCIATED SYSTEMS.
2	10/20/86	MPW	DWS	WRD	BCL	RRC	ADDED VALVE V9013 PER FP-5388R. REF CONC LOCATIONS CHANGE. THEN RELOCATED RELIEF VALVE V188 AND V202 PER ERECTION ISO'S.
1	6/24/86	DBF	MRB	VNK	JMCS	RRC	INCORP FTR 73/07424. ADDED DR 465, DR & V DESIGNATIONS
0	5/15/86	DBF	MRB	TAK	ASK	WFD	ISSUED FOR OPERATIONS

REF. DRAWING NO.	REV	TITLE
9763-F-805631	10	SOLID WASTE SYS. SPENT RESIN CONCENTRATES P&ID
9763-F-202884	14	HEATER MISC. VENTS & DRAINS P & ID
9763-F-805039	11	STM. GEN. BLDWN. EVAP. SYS.

North Atlantic Energy Service Corporation

SEABROOK STATION

STEAM GENERATOR BLOWDOWN BLOWDOWN EVAPORATION DETAIL

PID- 1-SB-B20629

11/21/93

FOR P&ID REFERENCE DRAWINGS, SYMBOLS AND ABBREVIATIONS REFER TO DRAWINGS P&ID - LEGEND 1 AND P&ID - LEGEND 2

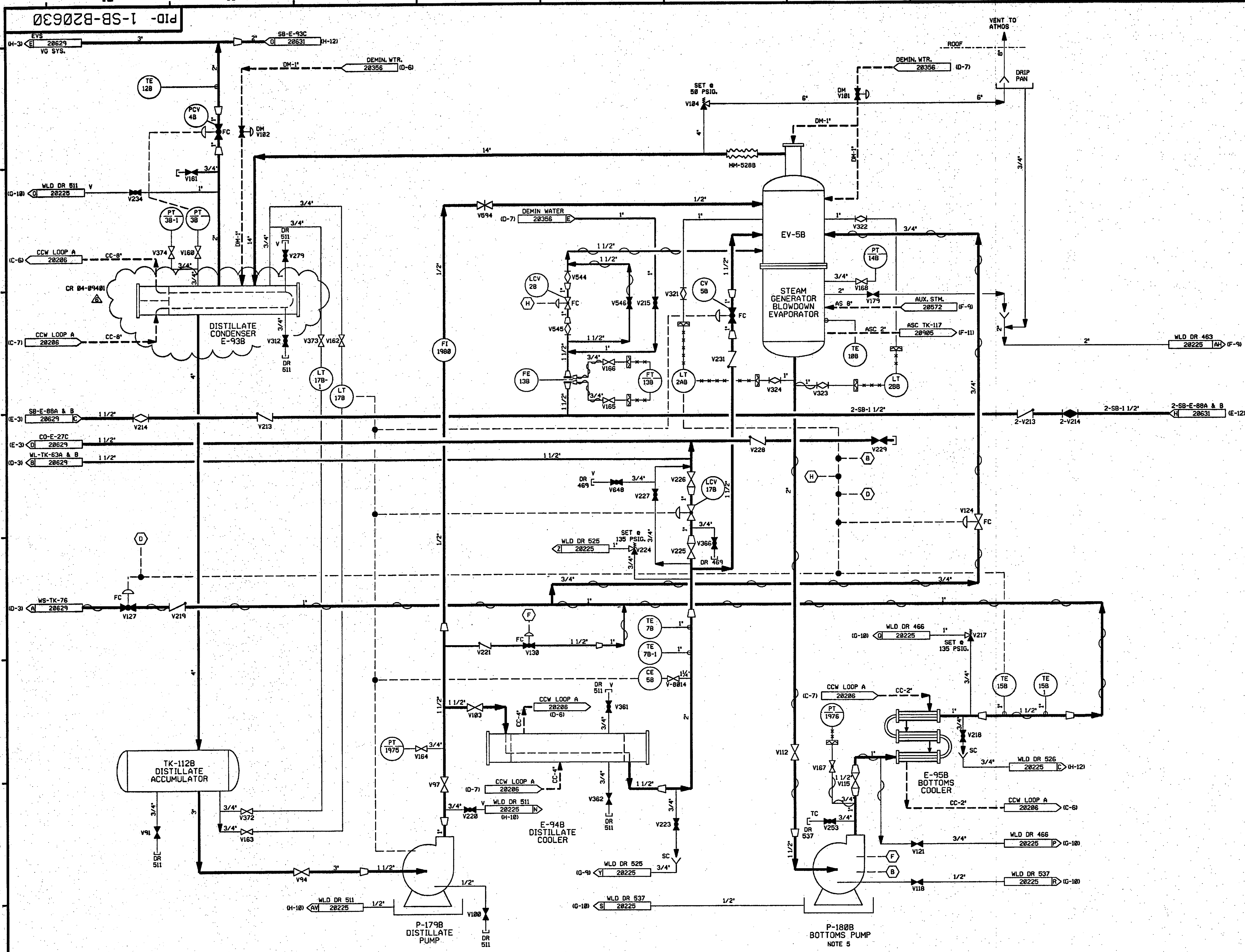

NOTES:

1. WORK THIS DRAWING WITH DRAWINGS 20625 THRU 20629 & 20631.
2. ALL LINES, EQUIPMENT, COMPONENTS AND INSTRUMENTS HAVE SYSTEM PREFIX SB, UNLESS NOTED OTHERWISE.
3. ALL LINES, EQUIPMENT, COMPONENTS AND INSTRUMENTS ARE SAFETY CLASS NNS, UNLESS NOTED OTHERWISE.
4. DELETED.
5. SEE DRAWING 20353 FOR WATER SUPPLY TO PUMP DOUBLE MECHANICAL SEALS.
6. DELETED.
7. △ INDICATES REVISION LEVEL
8. INSTRUMENTATION REFERENCES

⟨B⟩ LOW LOW EV-5B INTERLOCK WITH P-180B (SB-20630) & SB-LCV-1B (AS-20572).

⟨D⟩ HIGH E-95B OUTLET TEMP., HIGH WS-TK-76 LEVEL AND LOW DISCHARGE EV-5B INTERLOCK.

⟨F⟩ DISTILLATE FLUSH V130, P-180B.

⟨H⟩ EV-5B HI HI LVL. LCV-2B INTERLOCK.

REV	DATE	DSGN	CHKD	CE	DESCRIPTION
6	2-25-05	BCS	JM	RRB	INCORP. CR 04-09401 REV. 0
5	4/20/92	MRB	DWS	RRB	INCORP. MMOD 91-515 CA01
4	12/10/91	MRB	JM	GRM	INCORP. DCR 86-634 CA 0; ADDED NOTE 8
3	9/16/87	JDM	BCL	RRC	INCORP DCR 86-587. DELETED: NOTE 4&6, AND DUPLICATE SYSTEM. ADDED: V-8014 PER FP 53889. CORRECTED DRAFTING ERRORS. REVISED NOTE 3.
2	10/16/86	MRJ	BCL	RRC	REVISED TO CLARIFY DUPLICATION OF ASSOCIATED SYSTEMS. ADDED CONT FLAG COORDS. REVISED PIPING PER ERECTION ISO'S. ADDED NOTE 7.
1	6/27/86	DWS	BCL	RRC	INCORP ECA 19/116129B AND UPDATE PER LATEST UE&C P&ID
0	5/15/86	OPO	TAK	WFD	ISSUED FOR OPERATIONS

REF. DRAWING NO.	REV	TITLE
9763-F-805039	11	STM. GEN. BLDWN. EVAP. SYS.

FPL ENERGY Seabrook Station

STEAM GENERATOR BLOWDOWN
BLOWDOWN EVAPORATION
DETAIL

PID- 1-SB-B20630

02/11/05

NHY PID:20630.DGN;1

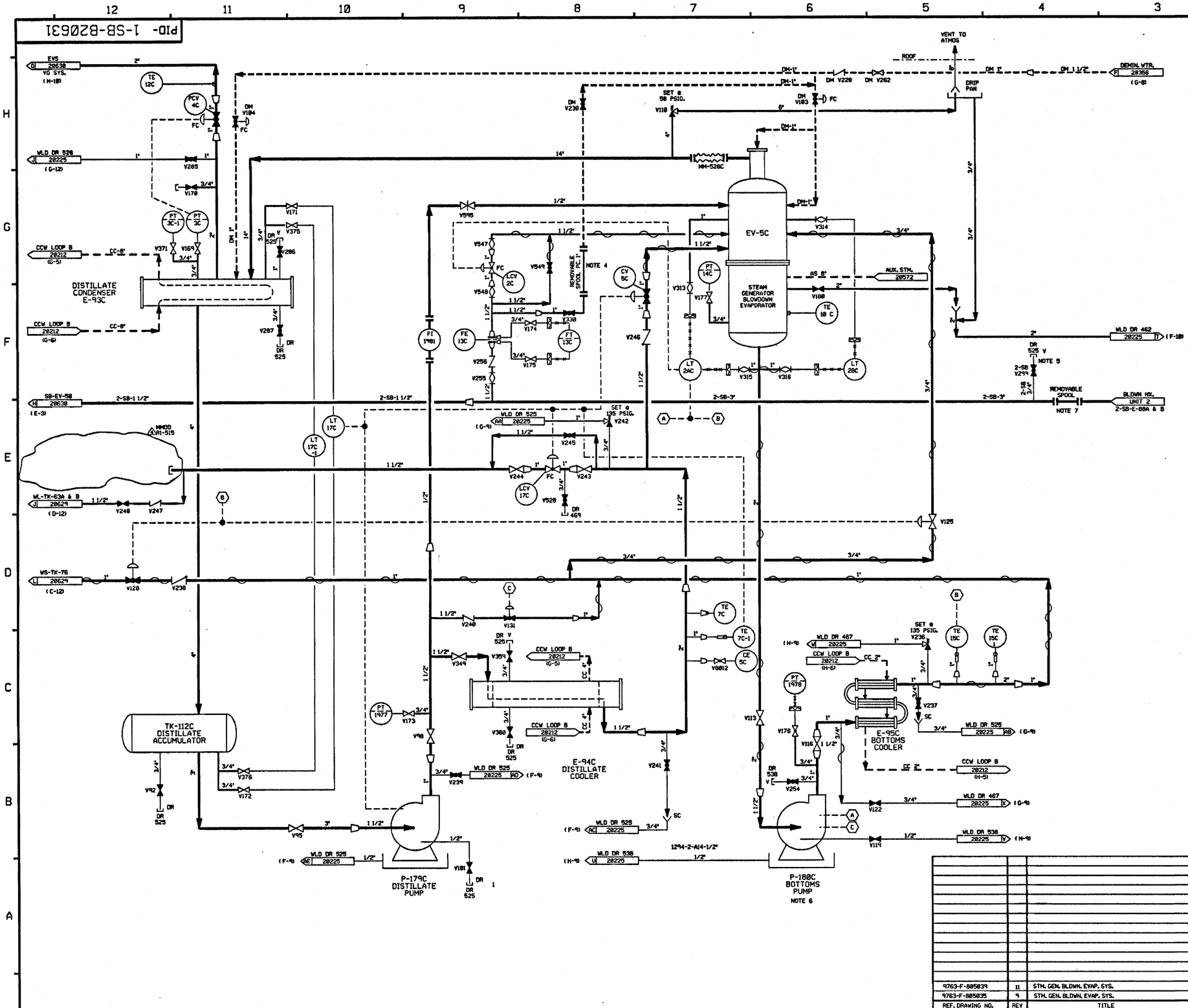

FOR P&ID REFERENCE DRAWINGS, SYMBOLS AND ABBREVIATIONS REFER TO DRAWINGS P&ID-LEGEND 1 AND P&ID-LEGEND 2.

NOTES:

1. WORK THIS DRAWING WITH DRAWINGS 20625 THRU 20630.
2. ALL LINES, EQUIPMENT, COMPONENTS AND INSTRUMENTS HAVE SYSTEM PREFIX SB, UNLESS NOTED OTHERWISE.
3. ALL LINES, EQUIPMENT, COMPONENTS AND INSTRUMENTS ARE SAFETY CLASS NNS, UNLESS NOTED OTHERWISE.
4. FLUSH AND CHEMICAL ADDITION CONNECTION
5. NITROGEN PURGE CONNECTION FOR DRY LAY-UP
6. SEE DRAWING 20353 FOR WATER SUPPLY TO PUMP DOUBLE MECHANICAL SEALS.
7. REMOVEABLE SPOOL TO BE REMOVED & REPLACED WITH BLIND FLANGE DURING UNIT 2 CONSTRUCTION.
8. △ INDICATES REVISION LEVEL

INSTRUMENTATION REFERENCES

(A) LOW LOW EV-5C INTERLOCK WITH P-180C.
(B) HIGH E-95C OUTLET TEMP., HIGH WS-TK-76 LEVEL AND LOW LEVEL EV-5C INTERLOCK.
(C) DISTILLATE FLUSH V131, P-180C INTERLOCK.

REF. DRAWING NO.	REV	TITLE
9763-F-805039	11	STM. GEN. BLDWN. EVAP. SYS.
9763-F-805035	9	STM. GEN. BLDWN. EVAP. SYS.

REV	DATE	DSGN	DRWN	CHKD	CE	LDE	DESCRIPTION
4	4/2/92	MRB	—	DWS	BCL	RRB	INCORP. MMOD 91-515 CA01
3	9/18/87	JDM	RMC	MRJ	BCL	RRC	INCORP DCR 86-507, REVISED TO CLARIFY DUPLICATION OF ASSOCIATED SYSTEMS. REVISED NOTE 3. CORRECTED DRAFTING ERRORS.
2	10/9/86	MRJ	DWS	MPW	VNK	RRC	REVISED CONTROL SIGNAL, PER UE&C P&ID. CORRECTED FLOW DIRECTION, ADDED V0812 & CONTINUATION FLAG REFERENCES. ADDED NOTE 8.
1	6/23/86	DBF	MRB	VNK	JMCS	RRC	ADDED "DR"&"V" DESIGNATIONS, HEAT TRACING & VALVE SIZE PER UE&C P&ID REVIEW
0	5/15/86	DBF	MRB	TAK	ASK	WFD	ISSUED FOR OPERATIONS

PSNH PUBLIC SERVICE OF NEW HAMPSHIRE

SEABROOK STATION

STEAM GENERATOR BLOWDOWN BLOWDOWN EVAPORATION DETAIL

PID- 1-SB-B20631

04/13/92

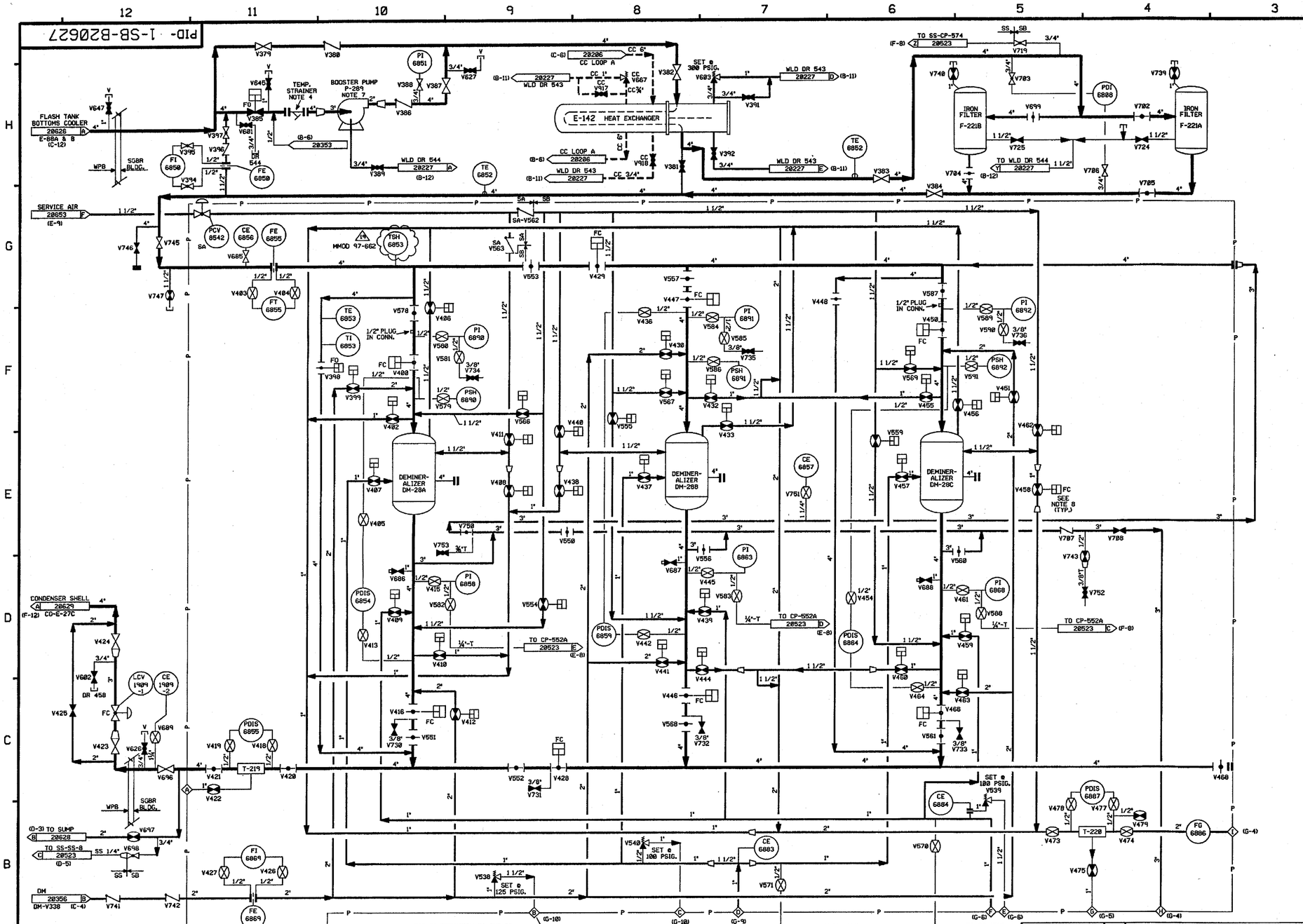

FOR P&ID REFERENCE DRAWINGS, SYMBOLS AND ABBREVIATIONS REFER TO DRAWINGS P&ID-LEGEND 1 & P&ID-LEGEND 2.

NOTES:

1. WORK THIS DRAWING WITH DRAWINGS 20625, 20626, & 20628 THRU 20631.
2. ALL LINES, EQUIPMENT, COMPONENTS AND INSTRUMENTS HAVE SYSTEM PREFIX SB, UNLESS NOTED OTHERWISE.
3. ALL LINES, EQUIPMENT, COMPONENTS AND INSTRUMENTS ARE SAFETY CLASS NNS UNLESS NOTED OTHERWISE.
4. STRAINER TO BE REMOVED DURING NORMAL PLANT OPERATION.
5. △ - INDICATES REVISION LEVEL.
6. DELETED
7. SEE DRAWING DM-20353 FOR WATER SUPPLY TO PUMP DOUBLE MECHANICAL SEALS. ALSO FOR PUMP 2-P-289 (NOT SHOWN)
8. ALL AIR OPERATED BALL VALVES IN SKD-95 DENOTE (FC) FAIL CLOSED.

REV	DATE	DSGN	DRWN	CHKD	CDE	SES	DESCRIPTION
19	8/21/01	BCS	—	NRB	—	RCP	INCORP MMOD 97-662 DCN-00
18	8/8/00	BCS	—	MPW	DWS	DEA	INCORP HSE 00-0095, REV. 0
17	8/3/00	DWS	—	BCS	MRB	JCM	INCORP DCR 980043 DCN#00 ,02 & 03
16	5/5/00	BCS	—	MPW	DWS	RSG	PARTIAL INCORP HSE 00-0095, REV. 0
15	5-16-96	BCS	—	MPW	DWS	DJH	INCORP MMOD 960547 CA#0
14	12-9-94	MPW	—	BCL	DWS	MHO	INCORP MMOD 930545 CA#0
13	6/3/94	BCL	—	DWS	MPW	JLD	INCORP DCR 930023 CA#0
12	1/21/94	DWS	—	MRB	BCL	RSG	INCORP DCR 850174 CA#0 & 2
11	2-8-93	BCL	—	MRB	MPW	RSG	INCORP DCR 920001 CA#01
10	8-26-92	DWS	—	BCL	MRB	RSG	INCORP DCR 910002 CA#13
9	8/3/92	DWS	—	BCL	MRB	GRM	FINAL INCORP DCR 910002 CA#1
8	7-16-92	MRB	—	BCL	DWS	RSG	INCORP. DCR'S 86-538 CA0,04 AND 91-802 CA0,01
7	4-30-92	DWS	—	BCL	MRB	RSG	INCORP. MMOD 90-616 CA0
6	4-15-92	MRB	—	BCL	MPW	RSG	INCORP. MMOD 900548 CA4
5	3/23/92	MRB	—	BCL	MPW	RSG	INCORP. MMOD 91-501 CA0 ADMINISTRATIVE UPDATE TO PROVIDE VALVE FAILURE MODES AS DESCRIBED IN APPR'D DCR 91-802
4	4/5/89	MRB	RMC	PAL	APL	MJY	INCORPORATED DCR 87-235 CA0 REVISED: NOTE 3, LINE SIZE PER FP 85086, PIPING CONFIGURATION PER UE & C P & ID 805638, PNEUMATIC VALVE SET POINT PER FP-55671 & DRAFTING ENHANCEMENTS. ADDED: CONTINUATION COORD'S.
3	10/14/87	MPW	JH	MRJ	BCL	RRC	NOTED TEMP MOD 86-057. ADDED: NOTE 7 DELETED NOTE 6a
2	10/16/86	CSB	WES	WRD	VNK	RRC	ADDED CONT LOC COORDS, 1 1/2" LINE SIZE TO DEMIN TK-28A OUTLET, P&ID REF DWG NOTE & RES86-RES-0160 REF. DELETED REDUCER FROM P-289 DRN LINE. REVD FI-6869 INSTR SYMBOL. CORRECTED TAGS V383 &V384 SHOWN REVERSED. CLARIFIED PIPING ARGUMT AROUND RELIEF VLV V521 & CE-6884.
1	7/8/86	DBF	SKN	DS	JMS	RRC	UPDATED UE & C REVS. ADDED NOTES 5 & 6. ADDED CHANGE ITEM 1.
0	5/15/86	DBF	MRB	TAK	ASK	WFD	ADDED V8000 PNEUMATIC VALVE. ISSUED FOR OPERATION INCORP. ECA'S 19/1060087A 99/114922A

REF. DRAWING NO.	REV	TITLE
9763-F-805637	8	STM. GEN. BLDWN. RECOV. SYS. SHT 4 P&ID
9763-F-805638	4	STM. GEN. BLDWN. RECOV. SYS. SHT 5 P&ID

North Atlantic Energy Service Corporation

SEABROOK STATION

STEAM GENERATOR BLOWDOWN BLOWDOWN RECOVERY DETAIL

PID- 1-SB-B20627

08/21/01

PID- 1-SB-B20628

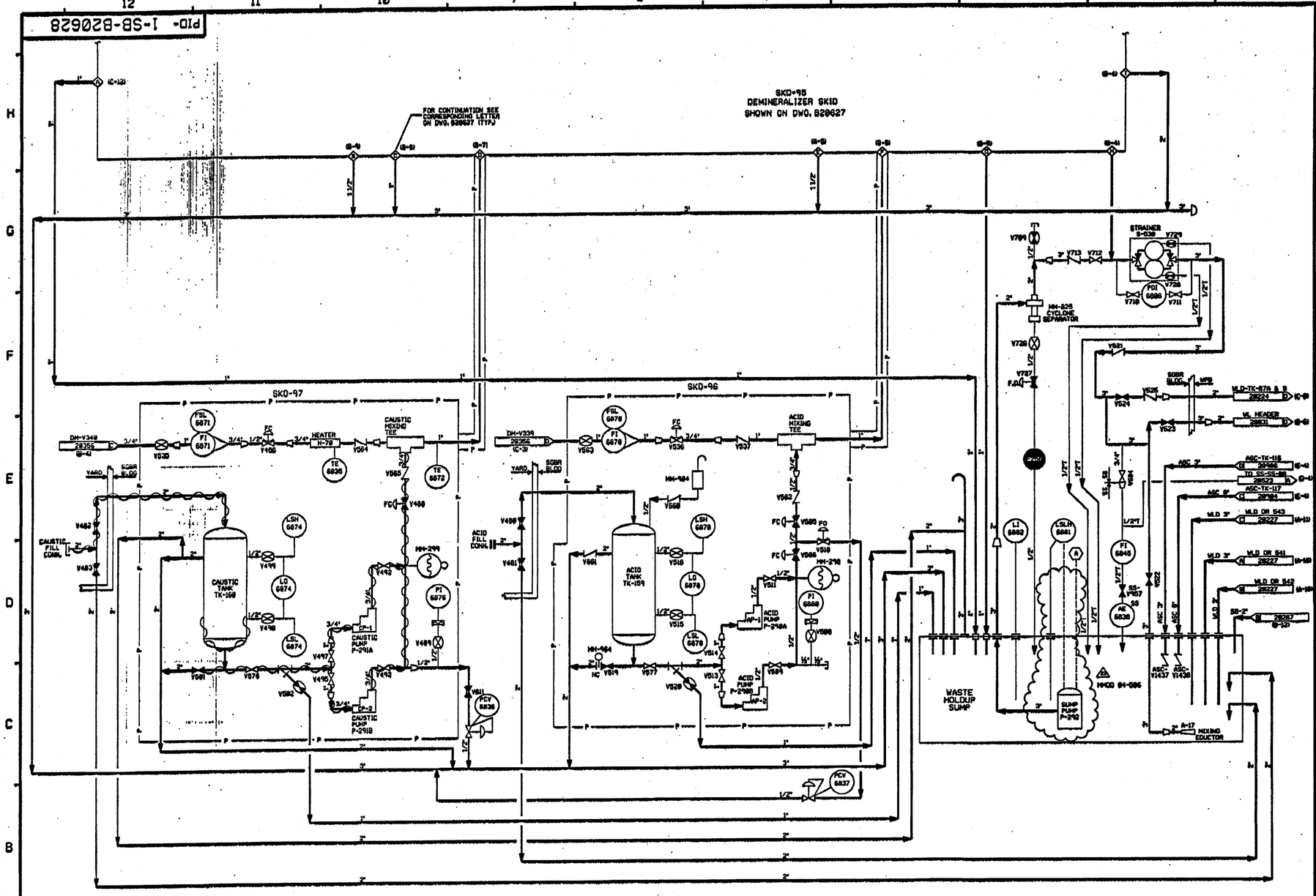

FOR P&ID REFERENCE DRAWINGS, SYMBOLS AND ABBREVIATIONS, REFER TO DRAWINGS P&ID - LEGEND 1 AND P&ID - LEGEND 2.

NOTES:

1. WORK THIS DRAWING WITH DRAWINGS 28625 THRU 28627 AND 28629 THRU 28631.
2. ALL LINES, EQUIPMENT, COMPONENTS AND INSTRUMENTS HAVE SYSTEM PREFIX SB. UNLESS NOTED OTHERWISE.
3. ALL LINES, EQUIPMENT, COMPONENTS AND INSTRUMENTS ARE SAFETY CLASS NNS, UNLESS NOTED OTHERWISE.
4. △ INDICATES REVISION LEVEL.
5. ◇ INDICATES CHANGE ITEM
6. INSTRUMENT REFERENCES
   (A) TO WL-FCV-1450-1 & 2, DRAWING WL-28631
7. DELETED

REV	DATE	DSGN	CHKD	CE	DESCRIPTION
22	8/9/04	BCS	JIM		INCORP MHOD 94-586 DCN-08
21	06/18/04	BCS	JM	DEA	INCORP MSE 94-621 REV. 09
20	03/24/04	BCS	JM	RRB	INCORP CR 94-82468 REV. 0
19	01/30/04	BCS	MPM	JCC	INCORP MSE 93-185 REV. 00
18	12/19/02	BCS	JM	DEA	PARTIAL INCORP. MSE 92-195 REV. 00
17	10/18/02	BCS	JM	MPM	INCORP CR 01-11164 REV. 0
16	6/21/01	BCS	MRB	RCP	INCORP MHOD 97-622 DCN-08, 09
15	6/2/98	DRL	BCS	VWS	INCORP MHOD 97-621 DCN 00
14	7/23/97	DMS	MPM	RCP	INCORP MHOD 95-634 DCN 1
13	3/5/97	MPM	BCS	MCD	INCORP MHOD 95-634 DCN 0
12	4/15/96	BCS	DMS	JMR	INCORP DCR 948823 CA#8
11	1/4/96	BCS	MPM	JCM	INCORP MHOD 94-543 CA#8
10	11/14/94	BCL	MPM	RSG	INCORP MHOD 93-538 CA#8
9	3/16/94	BCL	DMS	RSG	INCORP DCR 868174 CA#9
8	1/21/94	DMS	BCL	RSG	INCORP DCR 868174 CA#8 & 2
7	2-8-93	BCL	MRB	RSG	INCORP DCR 92-811 CA8
6	7/28/92	MRB	DMS	RSG	INCORP DCR 86-538 CA8
5	7/15/92	MRB	BCL	RSG	INCORP DCR 92-882 CA8
4	4/23/92	MRB	MPM	JEV	INCORP MHOD 92-525 CA8 ADMINISTRATIVE UPDATE TO PROVIDE VALVE FAILURE MODES AS DESCRIBED IN APPROVD DCR 92-882
3	3/28/89	MRB	PML	HJV	INCORPORATED DCR 86-185 CA 3 ADDED: CONTINUATION COORDINATES REVISED: NOTE 3 DELETED: HEAT TRACE PER UEAC P&ID 885637 AND FIELD CONDITION
2	10/18/88	MRJ	BCL	RRC	REVISED VALVES, LINE SIZE AND ADDED REDUCER PER UEAC P&ID. REVISED CONT FLAG REF AND DWG COORD'S. ADDED ADDED NOTES 4, 5. CHANGE ITEM 1 AND P&ID LEGEND NOTE.
1	6/23/88	DMS	WMK	RRC	INCORP. ECA 88/1874730
0	5/15/86	DMS	TAK	WFD	ISSUED FOR OPERATIONS & INCORPED STA. 24/86/2

REF. DRAWING NO.	REV	TITLE
9763-F-885638	4	STM. GEN. BLDWN. RECOV. SYS. SHT 5 P&ID
9763-F-885637	8	STM. GEN. BLDWN. RECOV. SYS. SHT 4 P&ID

FPL ENERGY Seabrook Station

STEAM GENERATOR BLOWDOWN
BLOWDOWN RECOVERY
DETAIL

PID- 1-SB-B20628

06/24/04

CATEGORY 1

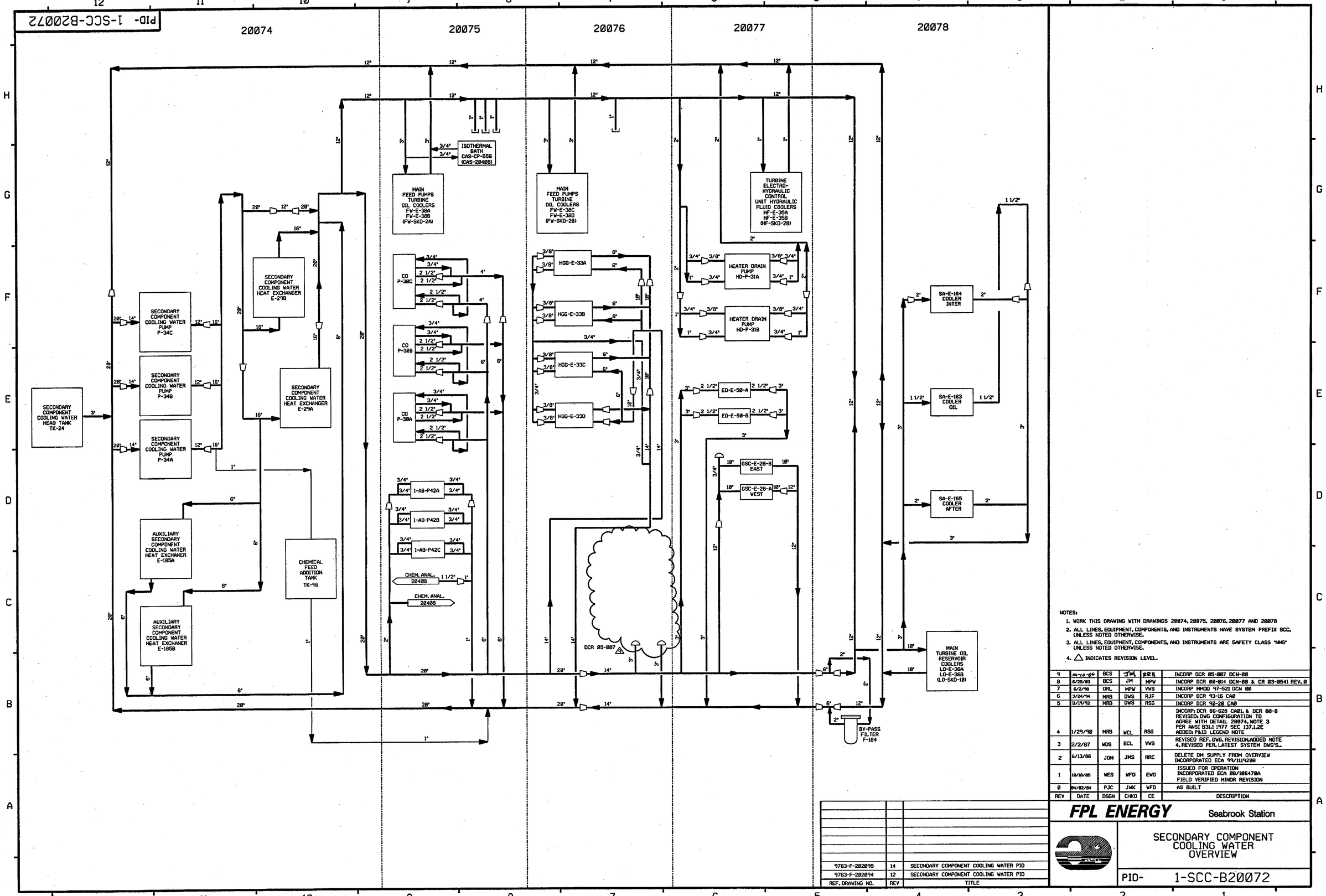

NOTES:

1. WORK THIS DRAWING WITH DRAWINGS 20074, 20075, 20076, 20077 AND 20078
2. ALL LINES, EQUIPMENT, COMPONENTS, AND INSTRUMENTS HAVE SYSTEM PREFIX SCC, UNLESS NOTED OTHERWISE.
3. ALL LINES, EQUIPMENT, COMPONENTS, AND INSTRUMENTS ARE SAFETY CLASS "NNS" UNLESS NOTED OTHERWISE.
4. △ INDICATES REVISION LEVEL.

REV	DATE	DSGN	CHKD	CE	DESCRIPTION
9	10-10-06	BCS	JWL	[illegible]	INCORP DCR 05-007 DCN-00
8	6/25/03	BCS	JM	MPW	INCORP DCR 00-014 DCN-00 & CR 03-0541 REV. 0
7	6/2/98	DRL	MPW	VWS	INCORP MMOD 97-521 DCN 00
6	3/24/94	MRB	DWS	RJF	INCORP DCR 93-16 CA0
5	11/19/92	MRB	DWS	RSG	INCORP DCR 92-28 CA0
4	1/29/90	MRB	WCL	RSG	INCORP: DCR 86-628 CA01, & DCR 88-8 REVISED: DWG CONFIGURATION TO AGREE WITH DETAIL 20074, NOTE 3 PER ANSI B31.1 1977 SEC 127.1.2E ADDED: P&ID LEGEND NOTE
3	2/2/87	WDS	BCL	VWS	REVISED REF. DWG. REVISION, ADDED NOTE 4, REVISED PER. LATEST SYSTEM DWG'S.
2	6/13/86	JDM	JMS	RRC	DELETE DM SUPPLY FROM OVERVIEW INCORPORATED ECA 99/1119208
1	10/18/85	WES	WFD	EWD	ISSUED FOR OPERATION INCORPORATED ECA 88/106470A FIELD VERIFIED MINOR REVISION
0	04/02/84	PJC	JWK	WFD	AS BUILT

REF. DRAWING NO.	REV	TITLE
9763-F-202095	14	SECONDARY COMPONENT COOLING WATER PID
9763-F-202094	12	SECONDARY COMPONENT COOLING WATER PID

FPL ENERGY Seabrook Station

SECONDARY COMPONENT COOLING WATER OVERVIEW

PID- 1-SCC-B20072

10/08/06

NHY PID:20012.DGN;1

PID- 1-AB-B20012

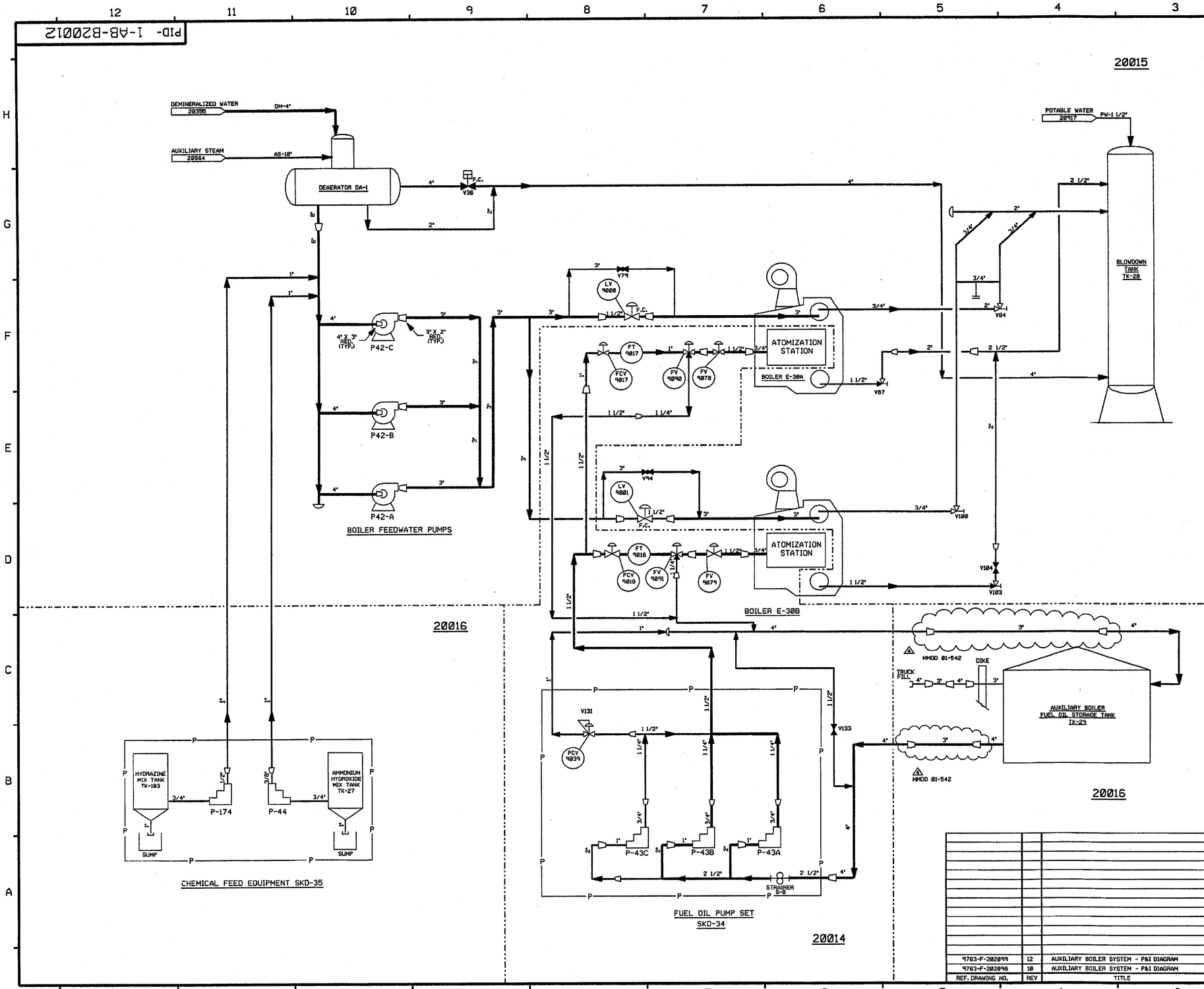

FOR P&ID REFERENCE DRAWINGS, SYMBOLS AND ABBREVIATIONS REFER TO DRAWINGS P&ID - LEGEND 1 AND P&ID - LEGEND 2

NOTES:
1. WORK THIS DRAWING WITH DRAWINGS 20014, 20015, AND 20016
2. ALL LINES, EQUIPMENT, COMPONENTS, AND INSTRUMENTATION HAVE SYSTEM PREFIX AB, EXCEPT AS NOTED
3. ALL EQUIPMENT IN THIS SYSTEM IS SAFETY CLASS NNS.
4. △ INDICATES REVISION LEVEL

REV	DATE	DSGN	DRWN	CHKD	CDE	SES	DESCRIPTION
4	[illegible]	BCS	—	JM	—	[illegible]	INCORP MMOD 01-542 DCN-00
3	2/2/98	MRB	FCB	APL	WCL	DJM	INCORP MMOD 96-614 CAS REVISED NOTE 3 PER 1-NHY-[illegible] ADDED LEGEND 1 & 2 P&ID NOTE
2	1/28/87	MPW	DWS	WRD	BCL	RRC	ADDED NOTE 4, REVISED PER LATEST SYSTEM DRAWINGS.
1	10/9/85	WES	MRB	DWS	DHF	WFD	ISSUED FOR OPERATIONS GENERAL REVISION
0	03/05/84	PJC	RI	RSL	BRG	WFD	AS BUILT

REF. DRAWING NO.	REV	TITLE
9763-F-202099	12	AUXILIARY BOILER SYSTEM - P&I DIAGRAM
9763-F-202098	10	AUXILIARY BOILER SYSTEM - P&I DIAGRAM

North Atlantic Energy Service Corporation

SEABROOK STATION

AUXILIARY BOILER OVERVIEW

PID- 1-AB-B20012

11/20/01

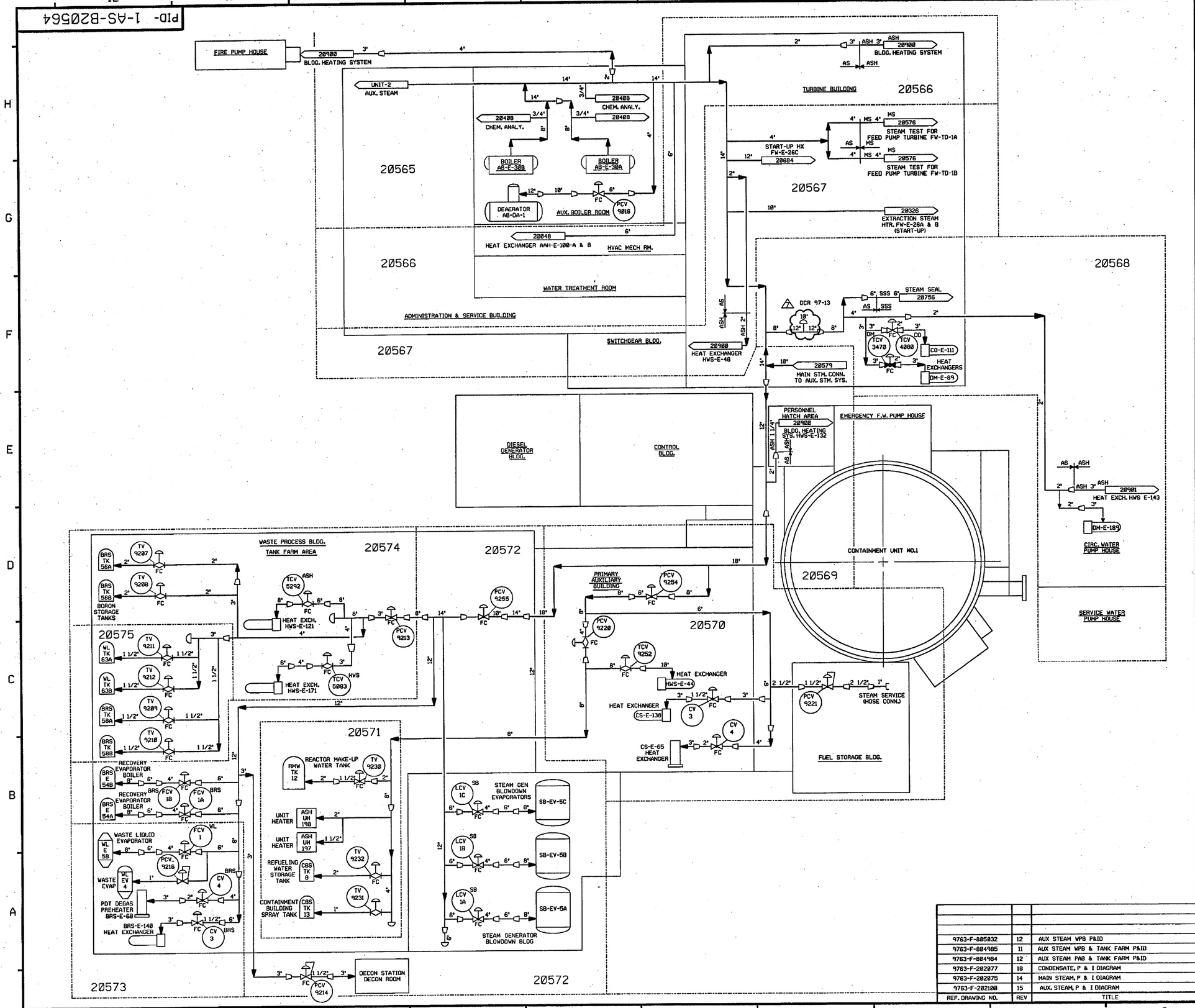

FOR P&ID REFERENCE DRAWINGS, SYMBOLS AND ABBREVIATIONS REFER TO DRAWINGS P&ID - LEGEND 1 AND P&ID - LEGEND 2

NOTES:

1. ALL LINES, EQUIPMENT, COMPONENTS AND INSTRUMENTS HAVE SYSTEM PREFIX 'AS', UNLESS NOTED OTHERWISE.
2. WORK THIS DRAWING WITH DRAWINGS 20565 THRU 20575 & DRAWING 20576.
3. △ INDICATES REVISION LEVEL.

REV	DATE	DSGN	CHKD	CE	DESCRIPTION
7	9/7/05	BCS	JM	MW	INCORP DCR 97-13 DCN 00
6	9/14/99	MPW	DWS	DJM	INCORP DCR 97-12 DCN 00
5	5/6/99	BCS	DWS	DJM	INCORP DCR 95-38 DCN-22
4	6/18/97	MPW	DWS	GRM	INCORP DCR 95-39 CA 0
3	9/4/91	MRB	JM	DJM	INCORPORATED DCR 90-23 CA11 ADDED P&ID LEGEND NOTE REV. DWG CONTINUATION TAG & DESCRIPT.
2	3/6/87	MPW	MRJ	RRC	ADDED NOTE 3 AND REVISED PER LATEST SYSTEM DRAWINGS.
1	4/18/86	WC	JDM	WFD	ISSUED FOR OPERATIONS
0	10/22/84	CD	RSL	PEF	ISSUED FOR FIELD VERIFICATION

REF. DRAWING NO.	REV	TITLE
9763-F-805032	12	AUX STEAM WPB P&ID
9763-F-804985	11	AUX STEAM WPB & TANK FARM P&ID
9763-F-804984	12	AUX STEAM PAB & TANK FARM P&ID
9763-F-202077	18	CONDENSATE, P & I DIAGRAM
9763-F-202075	14	MAIN STEAM, P & I DIAGRAM
9763-F-202100	15	AUX. STEAM, P & I DIAGRAM

FPL ENERGY Seabrook Station

AUXILIARY STEAM OVERVIEW

PID- 1-AS-B20564

03/29/05

NHY PID28564.DGN1

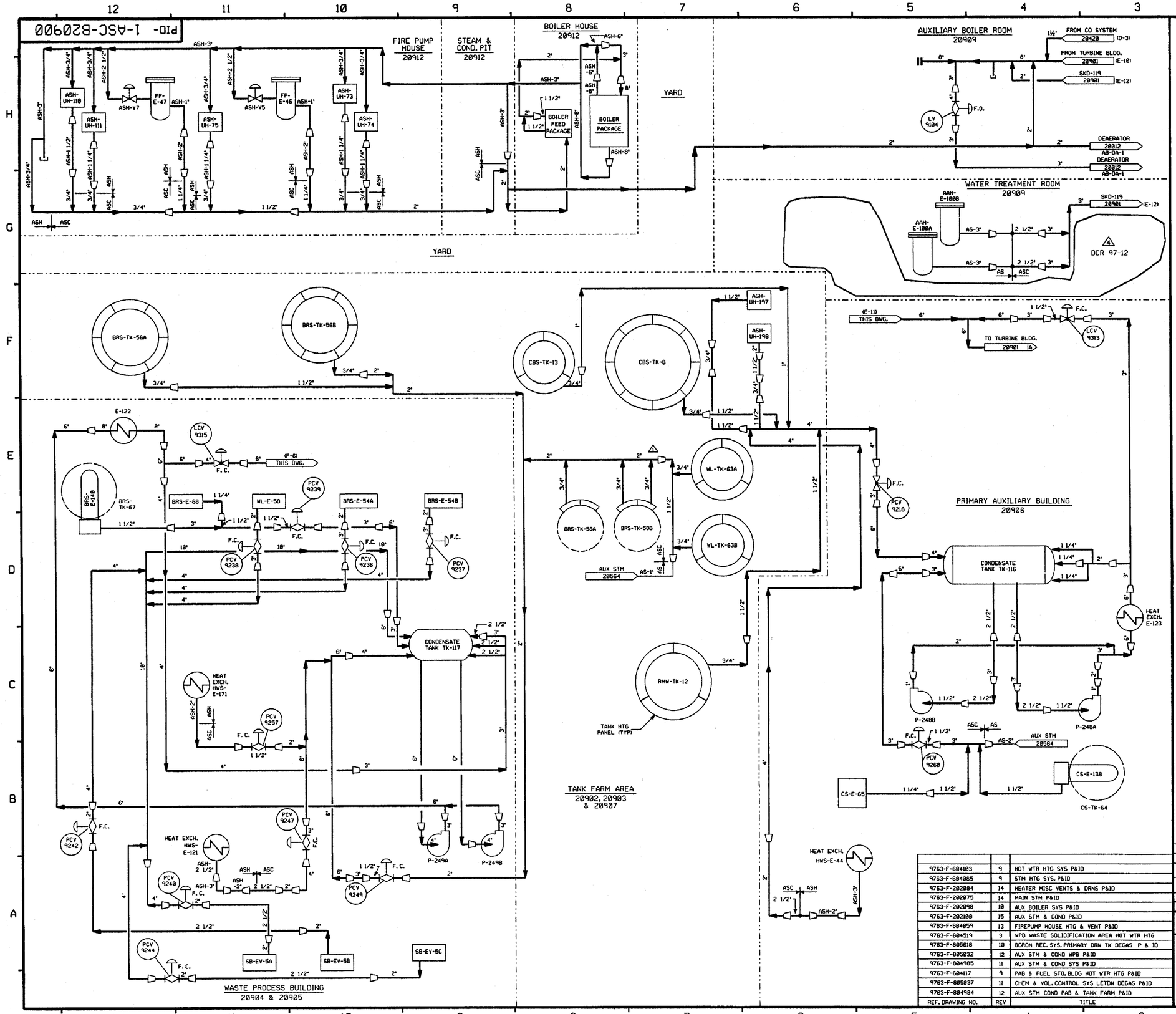

NOTES:
1. WORK THIS DWG WITH DWGS 20901 THRU 20913, 20925 & 20926.
2. ALL LINES, EQUIPMENT, COMPONENTS & INSTRUMENTS HAVE SYSTEM PREFIX ASC UNLESS NOTED OTHERWISE.
3. △ INDICATES REVISION LEVEL

REV.	DATE	DSGN	DRWN	CHKD	CDE	SES	DESCRIPTION
4	9/11/99	MPW	—	DWS	BCS	DTM	INCORP. DCR 97-12 DCN 00
3	11/15/96	MPW	—	BCS	DWS	JCM	INCORP. DCR 92-24, CA5
2	2/25/92	MRB	—	BCL	RSG	RSG	INCORP. DCR 86-419, CA15 REV. NOTE 1
1	1/28/91	MPW	TAK	WRD	BCL	RRC	ADDED NOTE 3 AND REVISED PER LATEST SYSTEM DWG'S.
0	4/2/86	WES	DSB	JDM	DFM	WFD	ISSUED FOR OPERATIONS

REF. DRAWING NO.	REV	TITLE
9763-F-604103	9	HOT WTR HTG SYS P&ID
9763-F-604065	9	STM HTG SYS. P&ID
9763-F-202084	14	HEATER MISC VENTS & DRNS P&ID
9763-F-202075	14	MAIN STM P&ID
9763-F-202048	10	AUX BOILER SYS P&ID
9763-F-202100	15	AUX STM & COND P&ID
9763-F-604059	13	FIREPUMP HOUSE HTG & VENT P&ID
9763-F-604519	3	WPB WASTE SOLIDIFICATION AREA HOT WTR HTG
9763-F-805618	10	BORON REC. SYS. PRIMARY DRN TK DEGAS P & ID
9763-F-805032	12	AUX STM & COND WPB P&ID
9763-F-804985	11	AUX STM & COND SYS P&ID
9763-F-604117	9	PAB & FUEL STO. BLDG HOT WTR HTG P&ID
9763-F-805037	11	CHEM & VOL. CONTROL SYS LETDN DEGAS P&ID
9763-F-804984	12	AUX STM COND PAB & TANK FARM P&ID

North Atlantic Energy Service Corporation

SEABROOK STATION

AUXILIARY STEAM CONDENSATE SYS. OVERVIEW SHT 1

PID- 1-ASC-B20900

07/29/99

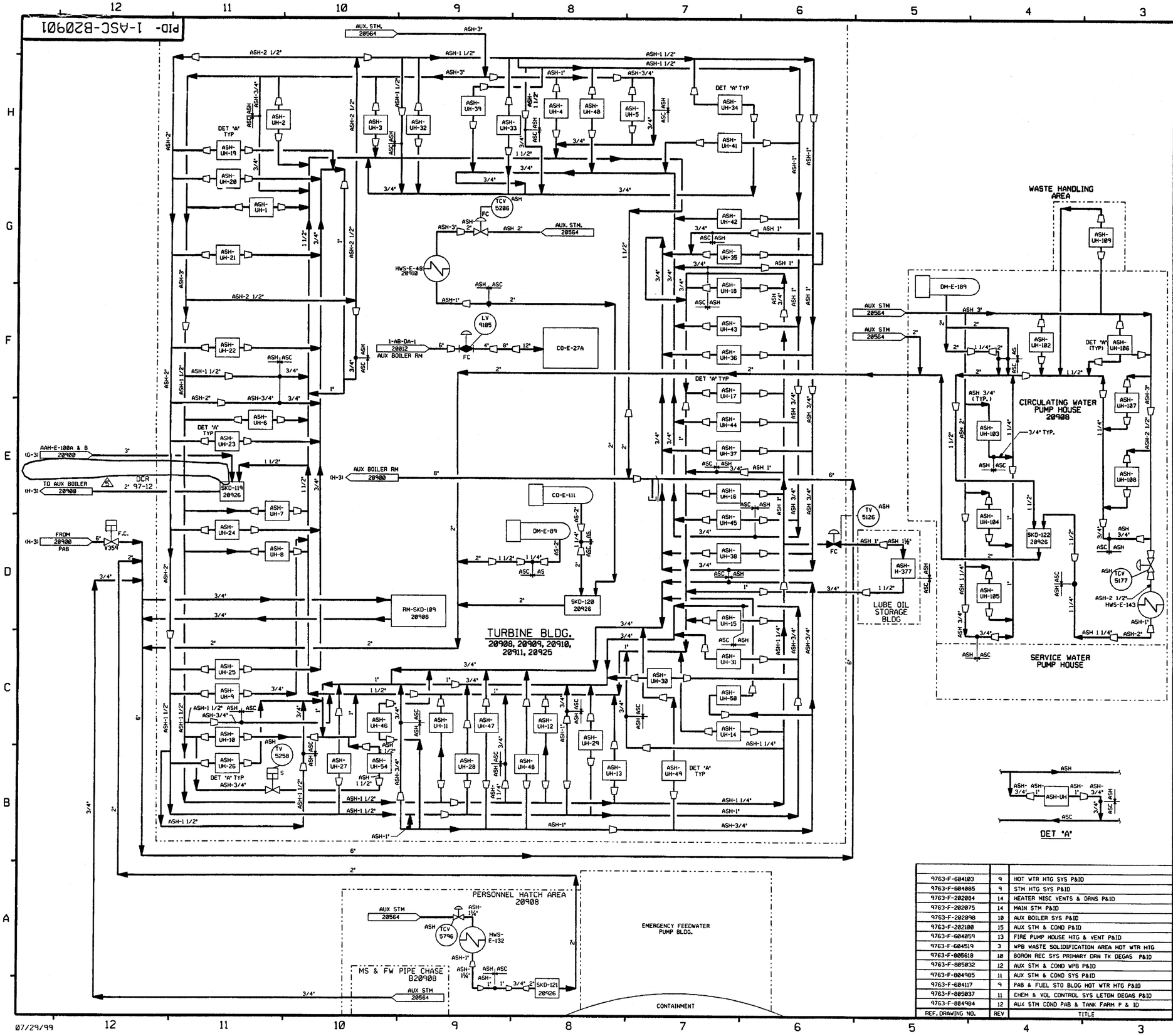

FOR P&ID REFERENCE DRAWINGS, SYMBOLS AND ABBREVIATIONS REFER TO DRAWINGS P&ID - LEGEND 1 AND P&ID - LEGEND 2

NOTES:

1) WORK THIS DWG WITH DWGS 20900 & 20902 THRU 20913, 20925 & 20926.
2) ALL LINES, EQUIPMENT, COMPONENTS AND INSTRUMENTS HAVE SYSTEM PREFIX ASC UNLESS NOTED OTHERWISE.
3) △ INDICATES REVISION LEVEL

REF. DRAWING NO.	REV	TITLE
9763-F-604103	9	HOT WTR HTG SYS P&ID
9763-F-604085	9	STM HTG SYS P&ID
9763-F-202084	14	HEATER MISC VENTS & DRNS P&ID
9763-F-202075	14	MAIN STM P&ID
9763-F-202098	10	AUX BOILER SYS P&ID
9763-F-202100	15	AUX STM & COND P&ID
9763-F-604059	13	FIRE PUMP HOUSE HTG & VENT P&ID
9763-F-604519	3	WPB WASTE SOLIDIFICATION AREA HOT WTR HTG
9763-F-805618	10	BORON REC SYS PRIMARY DRN TK DEGAS P&ID
9763-F-805032	12	AUX STM & COND WPB P&ID
9763-F-804985	11	AUX STM & COND SYS P&ID
9763-F-604117	9	PAB & FUEL STO BLDG HOT WTR HTG P&ID
9763-F-805037	11	CHEM & VOL CONTROL SYS LETDN DEGAS P&ID
9763-F-804984	12	AUX STM COND PAB & TANK FARM P & ID

REV	DATE	DSGN	DRWN	CHKD	CDE	SES	DESCRIPTION
5	7/29/99	MPW	—	DWS	BCS	DJM	INCORP. DCR 97-12 DCN 00
4	2/25/92	MRB	—	BCL	RSG	WFD	INCORP. DCR 86-419 CA15
3	9/4/91	MRB	RMC	JM	MPW	DJM	INCORP. DCR 86-419 & DCR 90-23 CA0
2	10/12/90	MRB	RMC	FCB	APL	ES	INCORP. DCR 87-138 CA0 ADDED P&ID LEGEND NOTE
1	1/27/87	MPW	DWS	WRD	BCL	VWS	ADDED NOTE 3 AND REVISED PER LATEST SYSTEM DRAWINGS.
0	4/2/86	WC	MRB	JDM	DFM	WFD	ISSUED FOR OPERATIONS

North Atlantic Energy Service Corporation

SEABROOK STATION

AUXILIARY STEAM CONDENSATE SYS
OVERVIEW SHT. 2

PID- 1-ASC-B20901

07/29/99

PID- 1-CPS-B20150

FOR P&ID REFERENCE DRAWINGS, SYMBOLS AND ABBREVIATIONS REFER TO DRAWINGS P&ID - LEGEND 1 AND P&ID - LEGEND 2

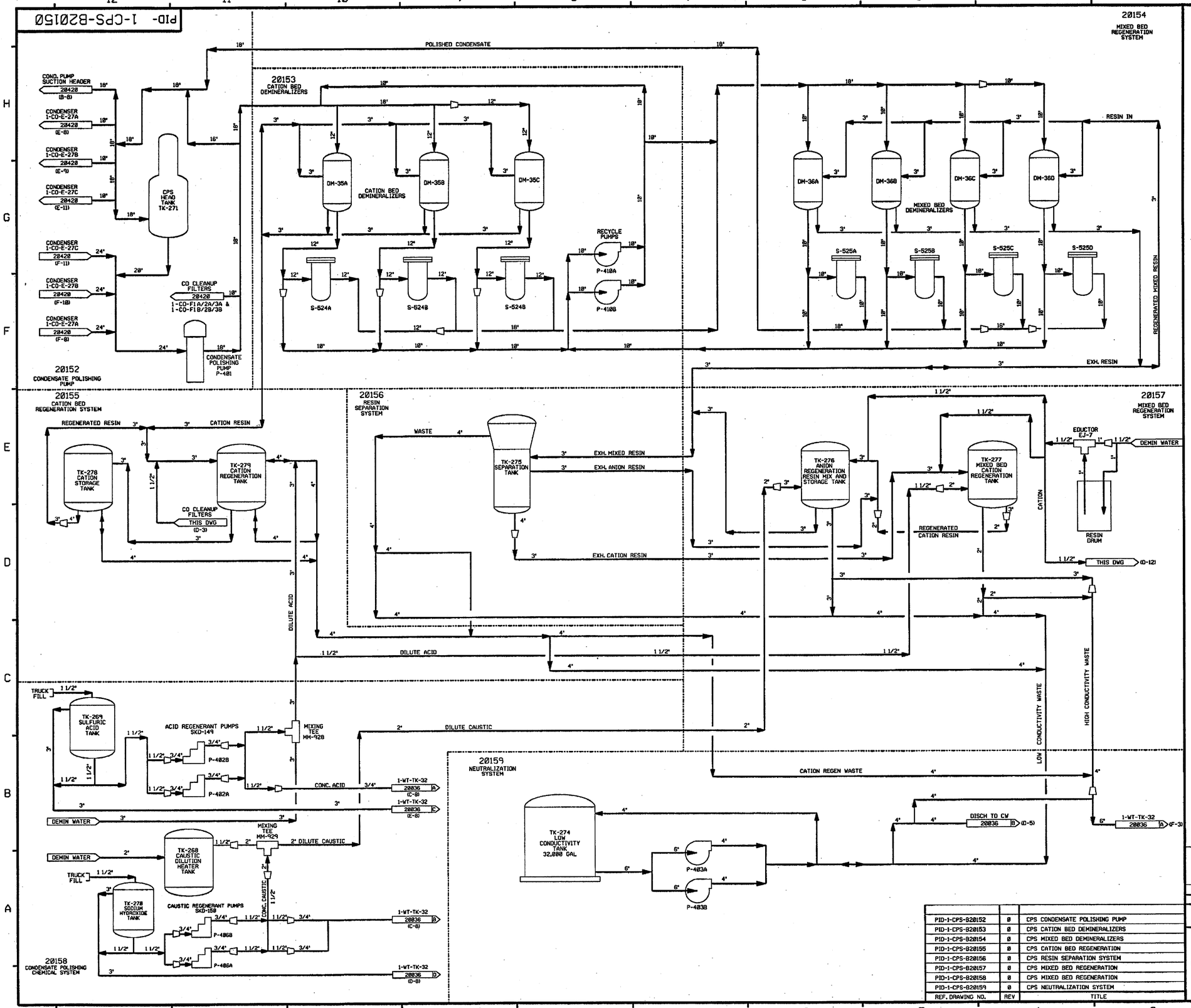

NOTES:

1. ALL LINES, VALVES, EQUIPMENT AND INSTRUMENTS HAVE A SYSTEM PREFIX OF "1-CPS" UNLESS NOTED OTHERWISE.
2. ALL LINES, VALVES, EQUIPMENT AND INSTRUMENTS ARE SAFETY CLASS NNS, UNLESS NOTED OTHERWISE.
3. WORK THIS DRAWING WITH DRAWINGS 20152 THRU 20159.
4. △ INDICATES REVISION LEVEL.

REF. DRAWING NO.	REV	TITLE
PID-1-CPS-B20152	0	CPS CONDENSATE POLISHING PUMP
PID-1-CPS-B20153	0	CPS CATION BED DEMINERALIZERS
PID-1-CPS-B20154	0	CPS MIXED BED DEMINERALIZERS
PID-1-CPS-B20155	0	CPS CATION BED REGENERATION
PID-1-CPS-B20156	0	CPS RESIN SEPARATION SYSTEM
PID-1-CPS-B20157	0	CPS MIXED BED REGENERATION
PID-1-CPS-B20158	0	CPS MIXED BED REGENERATION
PID-1-CPS-B20159	0	CPS NEUTRALIZATION SYSTEM

REV	DATE	DSGN	CHKD	CE	DESCRIPTION
0	4/29/05	BCS	GPS	[illegible]	INITIAL ISSUE PER DCR 97-813 DCN-00,235,236

FPL ENERGY Seabrook Station

CONDENSATE POLISHING SYSTEM OVERVIEW

PID- 1-CPS-B20150

04/21/05

PID- 1-CPS-B20152

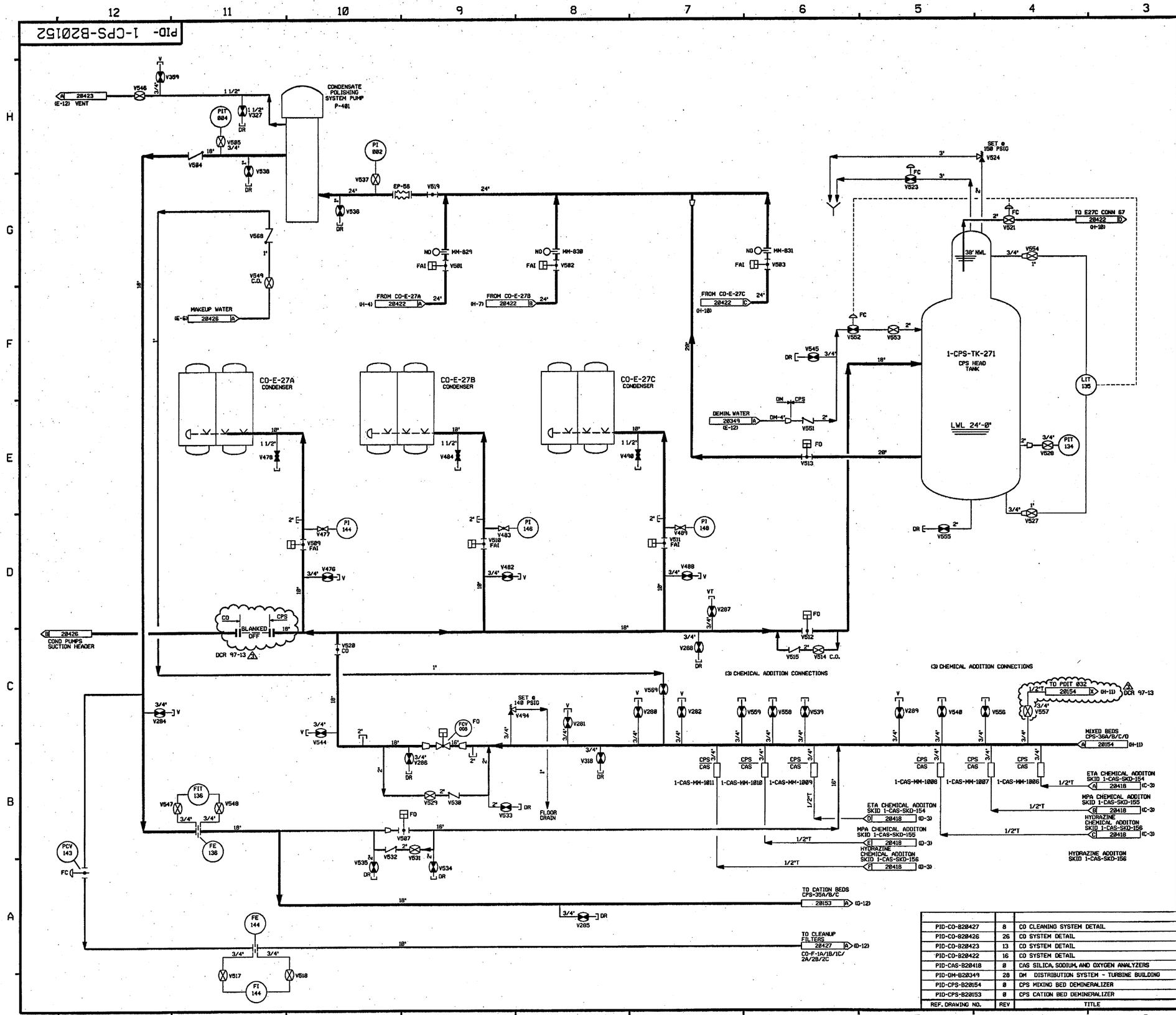

FOR P&ID REFERENCE DRAWINGS, SYMBOLS AND ABBREVIATIONS REFER TO DRAWINGS P&ID - LEGEND 1 AND P&ID - LEGEND 2

NOTES:

1. WORK THIS DRAWING WITH DRAWINGS 28150, 28153 THRU 28159.
2. ALL LINES, EQUIPMENT, COMPONENTS, VALVES AND INSTRUMENTS HAVE SYSTEM PREFIX "1-CPS-", UNLESS NOTED OTHERWISE.
3. ALL LINES, EQUIPMENT, COMPONENTS, VALVES AND INSTRUMENTS ARE SAFETY CLASS NNS, UNLESS NOTED OTHERWISE.
4. △ - INDICATES REVISION LEVEL.
5. ALL 3 DIGIT NUMERICAL INSTRUMENT TAG NAMES ARE PREFIXED WITH "28". EXAMPLE:

FIT 814 A = 1- CPS-FIT-28814-A

REF. DRAWING NO.	REV	TITLE
PID-CO-B20427	8	CO CLEANING SYSTEM DETAIL
PID-CO-B20426	26	CO SYSTEM DETAIL
PID-CO-B20423	13	CO SYSTEM DETAIL
PID-CO-B20422	16	CO SYSTEM DETAIL
PID-CAS-B20418	8	CAS SILICA, SODIUM, AND OXYGEN ANALYZERS
PID-DM-B20349	28	DM DISTRIBUTION SYSTEM - TURBINE BUILDING
PID-CPS-B20154	8	CPS MIXING BED DEMINERALIZER
PID-CPS-B20153	8	CPS CATION BED DEMINERALIZER

REV	DATE	DSGN	CHKD	CE	DESCRIPTION
3	10-23-06	JM	BCS	PRB	INCORP. DCR 97-13 DCN 274, 294
2	12/21/05	BCS	JM	SAK	INCORP. DCR 97-13 DCN 272
1	4/27/05	BCS	JM	PAL	INCORP. DCR 97-13 DCN 00, 46, 52, 54, 55, 69, 74, 174, 196
0	10/14/03	MPW	BCS	SAK	PARTIAL INCORP. DCR 97-13 DCN 00, 46, 54 & 55. INCORP. DCR 97-013 DCN 29 & 51.

FPL ENERGY Seabrook Station

CONDENSATE POLISHING SYSTEM
CONDENSATE POLISHING PUMP

PID- 1-CPS-B20152

10/10/06