PID- 1-CBA-B20300

20303 20302 20305 20304

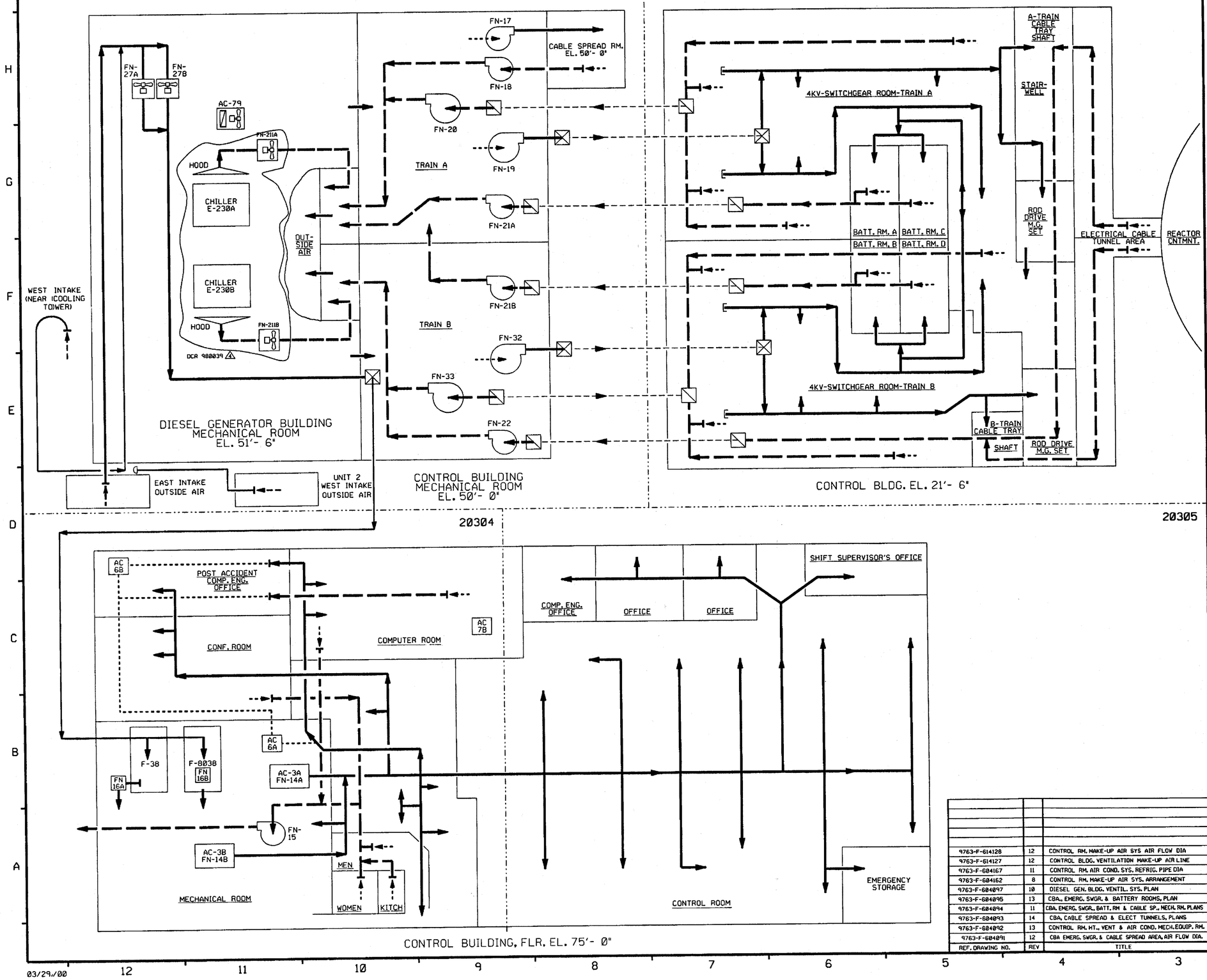

NOTES:

1. WORK THIS DRAWING WITH DRAWINGS 20302 THRU 20306. (REFRIGERANT PIPING DETAILED ON 20306.)
2. ALL HVAC, EQUIPMENT & INSTRUMENTS HAVE SYSTEM PREFIX CBA, UNLESS NOTED OTHERWISE.
3. △ -INDICATES DRAWING REVISION.

REF. DRAWING NO.	REV	TITLE
9763-F-614128	12	CONTROL RM. MAKE-UP AIR SYS AIR FLOW DIA
9763-F-614127	12	CONTROL BLDG. VENTILATION MAKE-UP AIR LINE
9763-F-604167	11	CONTROL RM. AIR COND. SYS. REFRIG. PIPE DIA
9763-F-604162	8	CONTROL RM. MAKE-UP AIR SYS. ARRANGEMENT
9763-F-604097	10	DIESEL GEN. BLDG. VENTIL. SYS. PLAN
9763-F-604095	13	CBA., EMERG. SWGR. & BATTERY ROOMS, PLAN
9763-F-604094	11	CBA. EMERG. SWGR., BATT. RM & CABLE SP., MECH. RM. PLANS
9763-F-604093	14	CBA. CABLE SPREAD & ELECT TUNNELS, PLANS
9763-F-604092	13	CONTROL RM. MT., VENT & AIR COND. MECH. EQUIP. RM.
9763-F-604091	12	CBA EMERG. SWGR. & CABLE SPREAD AREA, AIR FLOW DIA.

REV	DATE	DSGN	DRWN	CHKD	CDE	SES	DESCRIPTION
4	4/4/96	DWS	—	MRB	BCL	JMC	INCORP DCR 980039 DCN#00
3	3/31/93	MRB	—	BCL	DWS	JMC	INCORP MMOD 92-553 CA0
2	8/31/91	GPM	FCB	JH	MRB	MAC	INCORP. DCR 89-80 CA07
1	1/27/87	WDS	TAK	WRD	BCL	WWS	ADDED NOTE 3, REVISED REF DWG REV'S, REVISED PER LATEST SYS. DWG'S.
0	3/4/86	DWS	GJS	WES	JWK	WFD	ISSUED FOR OPERATIONS

North Atlantic Energy Service Corporation

SEABROOK STATION

CONTROL BUILDING AIR HANDLING OVERVIEW

PID- 1-CBA-B20300

03/29/00

PID- 1-CBA-B20304

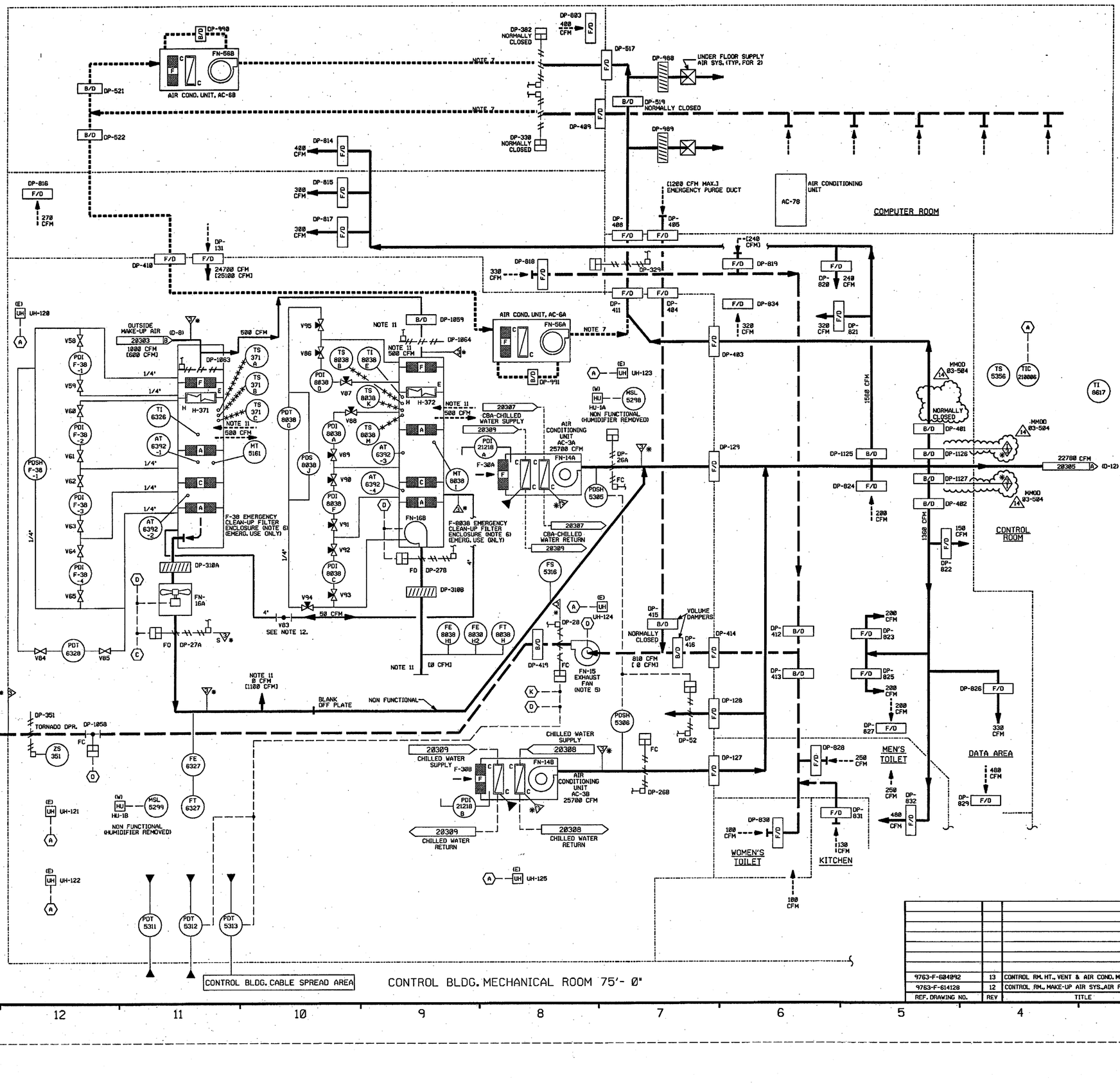

FOR P&ID REFERENCE DRAWINGS, SYMBOLS AND ABBREVIATIONS REFER TO DRAWINGS P&ID - LEGEND 1 AND P&ID - LEGEND 2

NOTES:

1. WORK THIS DRAWING WITH DRAWINGS 20300, 20302, 20303, 20305 & 20306.
2. ALL HVAC, EQUIPMENT & INSTRUMENTS HAVE SYSTEM PREFIX 'CBA', UNLESS NOTED OTHERWISE.
3. FOR SYMBOL LEGEND SEE DRAWING 20302.
4. INSTRUMENT REFERENCES:
   - (A) TIE-IN FOR UNIT HEATERS UH-120 THRU UH-125 & TISL-5357 ON THIS DRAWING.
   - (C) SAFETY INJECTION SIGNAL 'SI'
   - (D) INTERLOCK WITH FILTER RECIRC. SIGNAL, LOGIC DIAGRAM 583231.
   - (K) TO PDIS-5332 ON DRAWING 20303
5. EXHAUST FAN FN-15 & DAMPER DP-28 IS SIZED FOR 1200 CFM CONSIDERING THE WORST POSSIBLE CASE OF ZERO CFM EXFILTRATION.
6. FILTER DIFFERENTIAL PRESSURE & REQUIRED FLOWS:

FILTER TAG NO.	CLEAN FLOW CFM	DIRTY FLOW CFM	ANSI DIRTY FLOW CFM	SURVEILLANCE TEST FLOW CFM	SURVEILLANCE TEST FLOW +10% CFM	SURVEILLANCE TEST FLOW -10% CFM
CBA-F-38	1210	1100	990	1100	1210	990
CBA-F-8038	1210	1100	990	1100	1210	990

7. AC-6A & B USED ONLY AS EMERGENCY BACK-UP, NORMALLY ABANDONED.
8. DELELTED
9. DELETED
10. △ INDICATES REVISION LEVEL
11. REQUIRED FLOW DISTRIBUTION BASED ON CLEAN TO ANSI DIRTY FILTER CONDITIONS, WITH SINGLE TRAIN OPERATION IN CFM:

FAN TAG NUMBER	FILTER TAG NUMBER	EMERGENCY TOTAL=1100 ± 10% MAKE-UP	EMERGENCY TOTAL=1100 ± 10% RECIRC	FAN TAG NUMBER	FILTER TAG NUMBER	NORMAL MAKE-UP TOTAL= 1000 ± 10%
CBA-FN-16A	CBA-F-38	540 TO 680	390 TO 610 COMBINED	CBA-FN-27A	CBA-F-38	500 ± 10%
	CBA-F-8038	0			CBA-F-8038	500 ± 10%
CBA-FN-16B	CBA-F-38	0	390 TO 610 COMBINED	CBA-FN-27B	CBA-F-38	500 ± 10%
	CBA-F-8038	540 TO 680			CBA-F-8038	500 ± 10%

12. 1-CBA-V-83 WILL BE NORMALLY OPEN/THROTTLED TO A PRESET POSITION.
13. DELETED
14. DELETED

PORTIONS OF THIS DRAWING ARE
NUCLEAR SAFETY RELATED

REV	DATE	DSGN	CHKD	CE	DESCRIPTION
14	10-3-06	JM	BCS	CES	INCORP MMOD 03-504 DCN 00
13	5/2/00	DWS	BCS	JMS	INCORP DCR 980039 DCN#04
12	3/24/00	DWS	BCS	JMS	INCORP DCR 980039 DCN#00
11	2/15/00	DWS	BCS	JMS	PARTIAL INCORP DCR 980039 DCN#00
10	8/10/99	DWS	BCS	MKC	INCORP DCR 980047 DCN#00 & 03, DCR 980024 DCN#00 & REINCORP DCR 980037 DCN#00
9	10/2/98	MPW	BCS	GPM	INCORP. DCR 98-25 DCN 00
8	7/03/98	JWB	JLM	JMS	INCORP. DCR 98-37 DCN 00
7	6/12/95	BCL	DWS	DJM	INCORP. MMOD-94-570 CA-0
6	7/25/94	BCL	MPW	JMOC	INCORP. DCR 90-001 CA-11
5	4/20/93	BCL	MRB	IW	REINCORP. DCR-86-709, CA-23
4	3/31/93	BCL	MRB	JCM	INCORP. MMOD-92-553, CA-0
3	9/29/89	MRB	JM	JMS	INCORP DCR 86-709 CA ADDED: NOTE 10 AND 11
2	2/24/87	JDM	PAL	MAC	ADDED P&ID LEGEND NOTE, CONT DWG COORD'S, INCORP ECA 99/112947F AND DCR 528, REMOVED DASH LINE FROM INSTR.
1	6/23/86	JDM	VNK	RRC	INCORP ECA 99/1157330, CORRECTED DAMPER LOCATION & DAMPER NUMBER.
0	3/4/86	DWS	WES	WFD	ISSUED FOR OPERATIONS

REF. DRAWING NO.	REV	TITLE
9763-F-604092	13	CONTROL RM. HT., VENT & AIR COND. MECH. EQUIP. RM.
9763-F-614128	12	CONTROL RM., MAKE-UP AIR SYS., AIR FLOW DIAGRAM

FPL ENERGY Seabrook Station

CONTROL BUILDING AIR HANDLING MECHANICAL ROOM ELEVATION 75'- 0" DETAIL

PID- 1-CBA-B20304

10/26/06

PID- 1-CBA-B20305

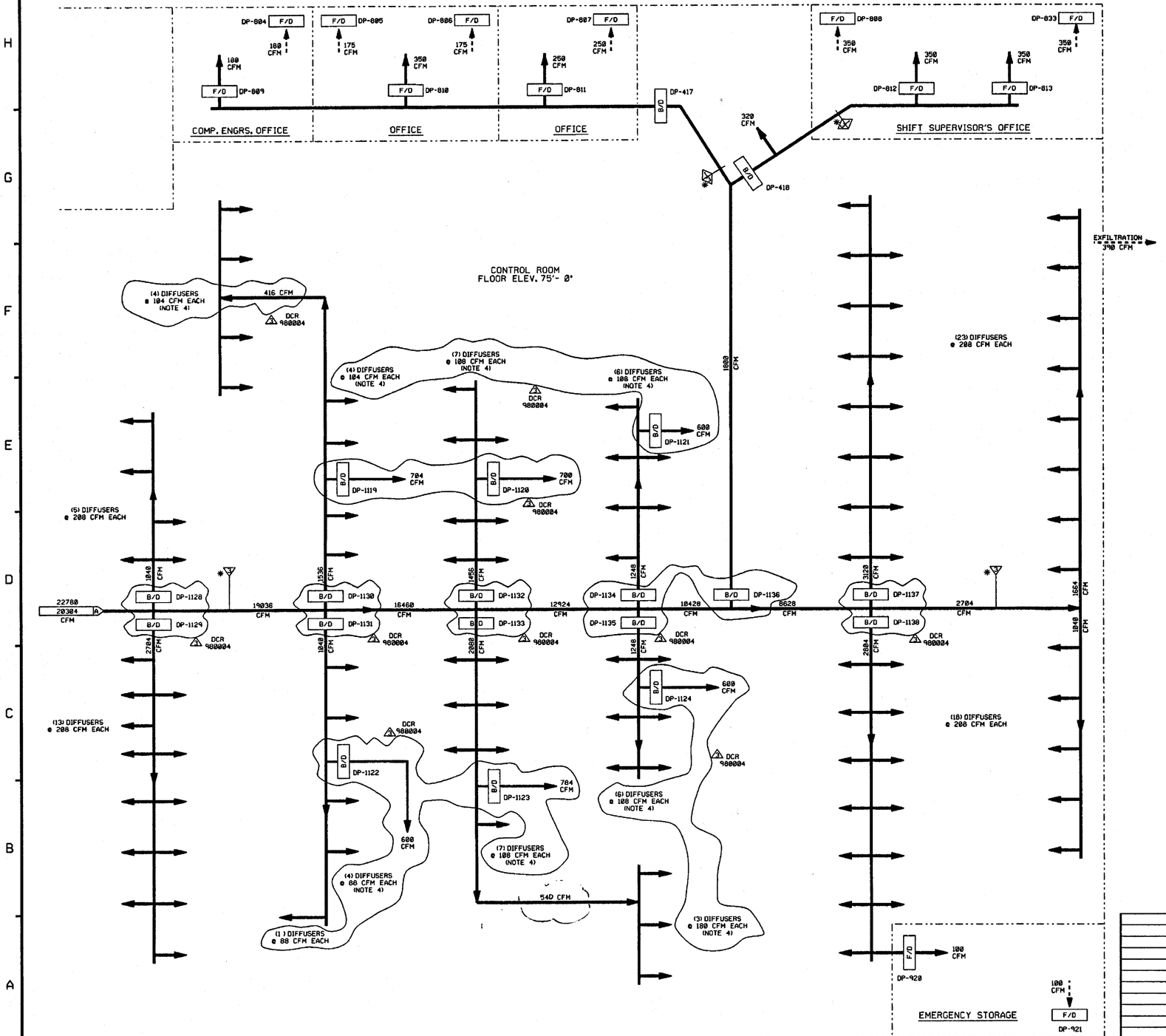

NOTES:

1.) WORK THIS DRAWING WITH B20300, B20302 THRU B20304 & B20306.
2.) ALL HVAC, EQUIPMENT & INSTRUMENTS HAVE SYSTEM PREFIX "CBA", UNLESS NOTED OTHERWISE.
3.) FOR SYMBOL LEGEND SEE DRAWING B20302.
4.) FLOW DISTRIBUTION TO EACH DIFFUSER IS NOT CRITICAL, PROVIDED THAT THE OVERALL BRANCH FLOW IS WITHIN ±10% OF SPECIFIED FLOW. (DCR 980004)

PORTIONS OF THIS DRAWING ARE
NUCLEAR SAFETY RELATED

REF. DRAWING NO.	REV	TITLE
9763-F-604092	13	CONTROL RM. HT., VENT & AIR COND., MECH. EQUIP. RM.
9763-F-614128	11	CONTROL RM., MAKE-UP AIR SYS., AIR FLOW DIA.

REV	DATE	DSGN	DRWN	CHKD	CDE	SES	DESCRIPTION
3	8/10/99	DWS	—	[illegible]	[illegible]	MXC	INCORP DCR 980004 DCN#00 & #3
2	5/12/95	BCL	—	DWS	MPW	DJM	INCORP MMOD 94-570 CA0
1	03/11/94	MRB	—	BCL	DWS	GRM	INCORP MMOD 92-553 CA01
0	03/04/86	DWS	GJS	WES	JWK	WFD	ISSUED FOR OPERATIONS

North Atlantic Energy Service Corporation

SEABROOK STATION

CONTROL BUILDING AIR HANDLING CONTROL ROOM DETAIL

PID- 1-CBA-B20305

10/27/98

PID- 1-MAH-B20497

NHY PID:20497.DGN:1

FOR P&ID REFERENCE DRAWINGS, SYMBOLS AND ABBREVIATIONS REFER TO DRAWINGS P&ID - LEGEND 1 AND P&ID - LEGEND 2

RM RE 6562

34000 CFM — 20494 (G-3)

(* 15,200 CFM) (O 17,700 CFM)

(16,000 CFM)

TORNADO DPR. DP-365

PDIS 5443

PDIS 5442

ZS 365

34000 CFM (0 CFM)

DP-14

FN-124

DP-128

FLR. OPENING EL. 64'-0"

(*15,200 CFM)

0 CFM (15,200 CFM)

FN-118

FAH FS 5439

500 CFM

AT 6396 -2

TSH 5159

DCR 91-017

DP-583

1/4"

V12

PDI F74 -5

V13

TORNADO DPR. DP-366

FN-11A

FS 5438

ZS 366

TI 5167

1/4"

V14

PDI F74 -4

V15

TSH 5157

AT 6395 -2

TI 5166

AT 6396 -1

DCR 91-017

MT 5437

1/4"

V16

PDI F74 -3

PDSH F74 -1

V1

FAH-1/4"

DP-582

V2

PDI F41 -5

FAH-F-74

NOTE 5

V17

500 CFM

V3

1/4"

TI 5158

V4

PDI F41 -4

V18

TSL F74 -2

TSL F74 -1

PDI F74 -2

V19

V5

1/4"

V20

PDI F74 -1

V21

V6

PDSH F41 -1

PDI F41 -3

(G-7) B 20220 WLD 2"

H H-59

FAH-F-41

NOTE 5

V7

1/4"

500 CFM

V8

PDI F41 -2

TSL F41 -2

TSL F41 -1

V9

DCR 91-017

1/4"

V10

PDI F41 -1

H-57 H

WLD 2" 20220 A (H-7)

V11

DP-588 B/D

DP-588 B/D

500 CFM

500 CFM

FUEL STORAGE BUILDING EL. 64'-0"

(* 15200 CFM)

FLR. OPNG. EL. 64'-0"

34000 CFM

17000 CFM

B/D DP-584

B/D DP-585

17,000 CFM EACH

SPENT FUEL STORAGE AREA

TOTAL EXHAUST 34000 CFM

2760 CFM

FAH MSH 5453

FAH MT 5454

2760 CFM

FAH TISH 5455

B/D DP-575

DP-576 B/D

3250 CFM

FAH TE 5456

4200 CFM

1/2"T CEVA TEST CONN.

2760 CFM

CNTMNT. ENCL. VENT AREA

4200 CFM

19,930 CFM

ZS 959

31000 CFM 20495 (11000 CFM) MIN.

(B-5)

F/D

B/D DP-577

DP-188

TORNADO DPR. DP-959

B/D DP-579

B/D DP-578

9930 CFM

FAH PDT 5452

2760 CFM

2550 CFM

2760 CFM

1650

6700 CFM 3000 CFM (4200 CFM)

INFILTRATION FROM OUTDOORS

1000 CFM

PIPE TUNNEL TO WASTE PROCESS BLDG. UNIT 2 ONLY.

LATER UNIT 2

FUEL STORAGE BLDG., EL. 20'-6" - 25'-0" AS NOTED

3250 CFM

550 CFM

1350 CFM

1350 CFM

1650 CFM

GRILL

FAH TI 8626

SPENT FUEL POOL PUMP ROOM

PIPE TUNNEL

FUEL STORAGE BUILDING, EL. 7'-0"

NOTES :

1. WORK THIS DRAWING WITH 20492, 20494 THRU 20496 & 20498 THRU 20508.
2. ALL HVAC, EQUIP, COMPONENTS & INSTRUMENTS HAVE SYSTEM PREFIX FAH (FUEL STORAGE BLDG. AIR HANDLING), UNLESS NOTED.
3. FOR SYMBOL LEGEND, SEE NOTE 3 ON DRAWING 20494.
4. △ ALL DUCTWORK, UNLESS NOTED.
5. FILTER HOUSING DIFFERENTIAL PRESS & REQUIRED FLOWS :

FILTER TAG NO.	CLEAN FLOW CFM	DIRTY FLOW CFM	ANSI DIRTY FLOW CFM	SURVEILLANCE TEST FLOW CFM	SURVEILLANCE TEST FLOW +10% CFM	SURVEILLANCE TEST FLOW -10% CFM
FAH-F-41	17700	16800	15200	16450	18095	14805
FAH-F-74	17700	16800	15200	16450	18095	14805

6. △ INDICATES REVISION LEVEL.

PORTIONS OF THIS DRAWING ARE

NUCLEAR SAFETY RELATED

REV	DATE	DSGN	DRWN	CHKD	COE	SES	DESCRIPTION
9	[illegible]	BCS	—	[illegible]	[illegible]	[illegible]	INCORP. DCR 91-017 DCN-0
8	5/11/92	MRB	—	BCL	DWS	GPM	INCORP MMOD 91-622 CA0
7	8/16/91	GPM	FCB	JM	MRB	IW	INCORP. DCR 86-554 CA0
6	12/19/90	MRB	RMC	JM	DWS	IW	INCORP. DCR 87-373 CA0
5	4/11/90	HP	FCB	MRB	APL	DJH	INCORP DCR 86-548 CA0
4	4/27/89	GPM	RMC	MRB	BCL	MAC	INCORP. DCR 86-555 CA 9
3	2/24/87	PAL	OPO	MPW	BCL	MAC	ADDED ECA 99/115114A, CONT. REF. DWGS., NOTE 6, PIPE TUNNEL AND CORRECTED DRAFTING ERRORS PER UE&C P&ID INCORP. DCR-528.
2	12/23/86	JDM	OPO	PAL	BCL	RRC	ADDED P&ID LEGEND NOTE, CONT. REF. DWGS., INCORP. ECA 99/112947F
1	9/2/86	JDM	DWS	MAP	BCL	RRC	INCORP ECA 98/117840A
0	6/12/86	DWS	DSB	JDM	DFM	WFD	ISSUED FOR OPERATIONS INCORP. ECA 99/112947B

9763-F-604116	12	P&B & FUEL STOR. BLDG., VENTIL. SYS.
REF. DRAWING NO.	REV	TITLE

North Atlantic Energy Service Corporation

SEABROOK STATION

MISCELLANEOUS AIR HANDLING FUEL STORAGE BUILDING DETAIL

PID- 1-MAH-B20497

12/22/99

P10- 1-MAH-B20492

RCA CHECKPOINT AREA
MAH - 20503
WAH

ELECTRICAL TUNNELS
MAH - 20503
ETA
EL. 0'-0" & (-)26'-0"

EMERGENCY FEEDWATER PUMPHOUSE
MAH - 20503
EPA
EL. 27'-0"

MS & FW PIPECHASE (EAST)
MAH - 20503
EAH
EL. 3'-0"
12'-0"
22'-0"

REACTOR CONTAINMENT
MAH - 20505 & 20506
CAH
MAH - 20504
COP & CAP

RESIDUAL HEAT REMOVAL EQUIPMENT VAULT
MAH - 20496 & 20508
EAH

MECHANICAL PENETRATION AREA
MS & FW PIPECHASE (WEST)
MAH - 20503
EAH

CONTAINMENT VENTILATION ENCLOSURE AREA
MAH - 20495
EAH & FAH

NUCLEAR TANK FARM
MAH - 20499
WAH

MAH - 20500
WAH
EL. 25'-0"

MAH - 20498
WAH
EL. 86'-0"

MAH - 20499
WAH
EL. 53'-0"

MAH - 20501
WAH
EL. (-) 3'-0"

MAH - 20502
WAH
EL.(-) 31' 0"
& 13'-0" (PARTIAL)

WASTE PROCESSING BUILDING

MAH - 20502
WAH

ASPHALT STORAGE BUILDING

MAH - 20496
PAH
EL. 7'-0" & (-) 6'-0"

MAH - 20495
PAH
EL. 25'-0"

MAH - 20494
PAH
EL. 53'-0" & 81'-0"

PRIMARY AUXILIARY BUILDING

MAH - 20502
WAH

STEAM GENERATOR BLOWDOWN RECOVERY BUILDING

MAH - 20493 & 20507
PAH
MMOD 91-571 WATER SUPPLY TO CHILLERS

MAH - 20497
FAH

FUEL STORAGE BUILDING

NOTES:

1. WORK THIS DRAWING WITH DRAWINGS 20494 THRU 20508.
2. SYSTEM PREFIXES:
   - CAH-CONTAINMENT AIR HANDLING
   - CAP-CONTAINMENT AIR PURGE
   - COP-CONTAINMENT ON-LINE PURGE
   - EAH-CONTAINMENT ENCLOSURE AIR HANDLING
   - EPA-EMERGENCY FEEDWATER PUMPHOUSE AIR HANDLING
   - ETA-ELECTRICAL PENETRATION AREA AIR HANDLING
   - FAH-FUEL STORAGE BUILDING AIR HANDLING
   - PAH-PRIMARY AUXILIARY BUILDING AIR HANDLING
   - WAH-WASTE PROCESSING BUILDING AIR HANDLING
3. △ INDICATES REVISION LEVEL.

REF. DRAWING NO.	REV	TITLE
9763-F-584128	13	CONT. STRCT., COOL. SYS., AIR FLOW
9763-F-584131	12	CONT. STRCT. FUEL PL. PURGE EXH., AIR FLOW
9763-F-584169	2	RCA CHECKPOINT. HT. & AIR COND. SYS.
9763-F-584141	14	EMER. FDWTR. PUMPHOUSE, HT. & VENT. SYS.
9763-F-584148	3	ELECT. TUNN., TRN A & B, AIR COND., AIR FLOW
9763-F-584513	4	WASTE PROC., VENT. SYS. AIR FLOW-3
9763-F-584518	3	WASTE PROC., VENT. SYS. AIR FLOW-4
9763-F-584512	5	WASTE PROC., VENT. SYS. AIR FLOW-2
9763-F-584581	18	WASTE PROC., VENT. SYS. AIR FLOW-1
9763-F-584116	12	PAB & FUEL STOR., VENT. SYS., AIR FLOW DIA.
9763-F-584186	18	PAB VENTILATION SYS., AIR FLOW, SHT.-1

REV	DATE	DSGN	DRWN	CHKD	CE	LDE	DESCRIPTION
2	8/6/94	GPH	FCB	JTA			INCORP. MMOD 91-571 CAB REVISED: DWG TITLE ADDED: SYS DESIGNATION TO BLDG P&ID DWG NUMBERS. DELETED: INCOMPLETE ITEMS BOX
1	1/29/87	WDS	OPD	WRD	BCL	VWS	REVISED REF. DWGS, REVISIONS, ADDED NOTE 3, REVISED PER LATEST SYS. DWGS.
0	6/12/86	DWS	SKN	JDH	DFM	WFD	ISSUED FOR OPERATIONS

PSNH — PUBLIC SERVICE OF NEW HAMPSHIRE

SEABROOK STATION

MISCELLANEOUS AIR HANDLING KEY PLAN △

PID- 1-MAH-B20492

08/23/91

PID- 1-MAH-B20494

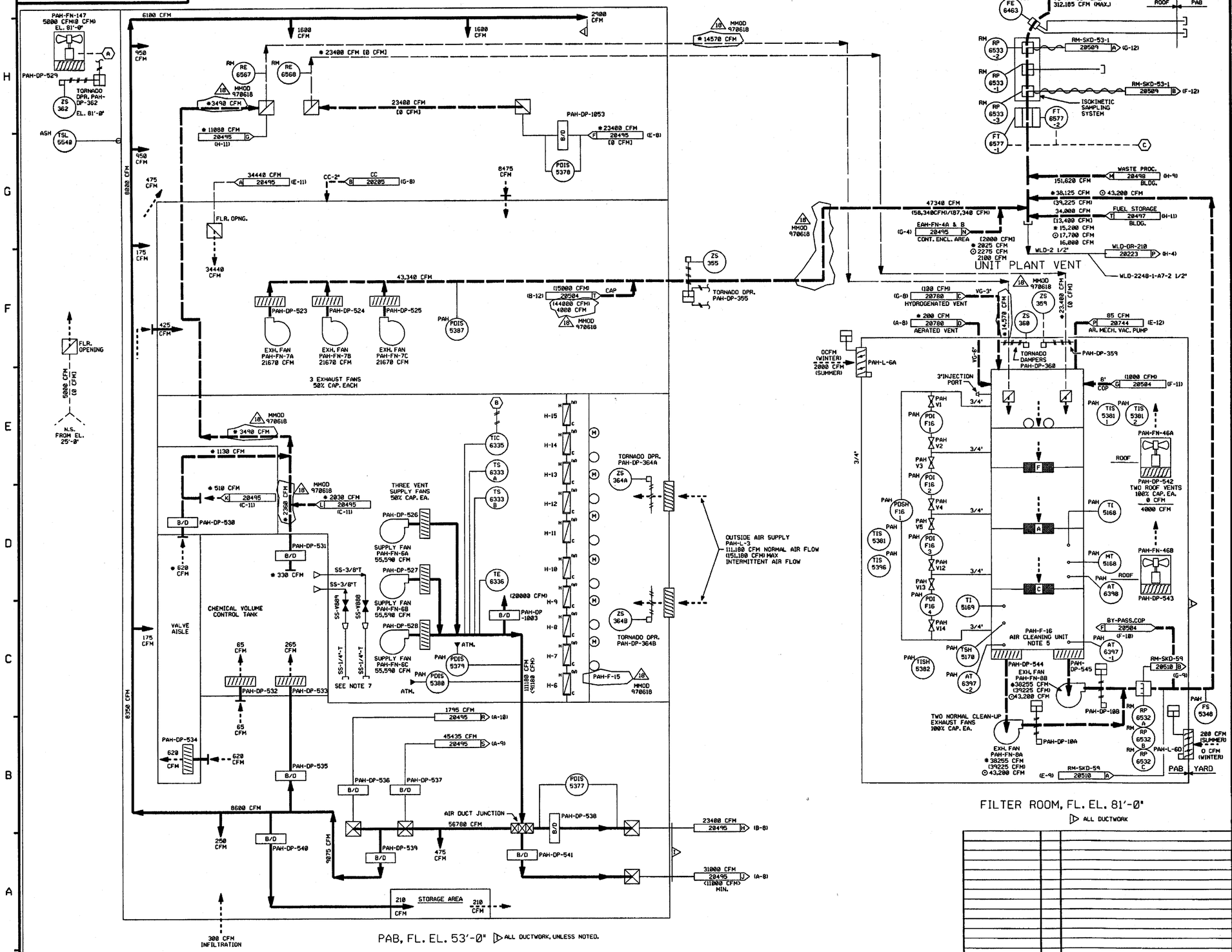

PAB, FL. EL. 53'-0" ALL DUCTWORK, UNLESS NOTED.

FOR P&ID REFERENCE DRAWINGS, SYMBOLS AND ABBREVIATIONS REFER TO DRAWINGS P&ID - LEGEND 1 AND P&ID - LEGEND 2

NOTES:

1). WORK THIS DRAWING WITH DRAWINGS 20492 & 20495 THRU 20508.

2). SYSTEM PREFIXES:

PAH - PRIMARY AUX. BLDG. AIR HANDLING.
CAP - CONTAINMENT AIR PURGE.
COP - CONTAINMENT ON-LINE PURGE.
SS - SAMPLE SYSTEM
ASC - AUXILIARY STEAM CONDENSATE

3). LEGEND:

XXX CFM - NORMAL AIR FLOW
<XXX CFM> - FUEL HANDLING AIR FLOW
(XXX CFM) - INTERMITTENT AIR FLOW
[XXX CFM] - EMERGENCY AIR FLOW
⊙ XXXX CFM - DENOTES "CLEAN SYSTEM" AIR FLOW RATE @ 12.98 "H_2O
* XXXX CFM - DENOTES AIR FLOW RATE AT ANSI N510-1980 TEST REQUIREMENT
DUCTED SUPPLY AIR
DUCTED EXH OR RETURN AIR
NON-DUCTED AIR
VERTICAL CONTINUATION OF DUCTS
TO ATMOSPHERE (INSTRUMENTATION)
R — REFRIGERANT LINE

4). INSTRUMENTATION REFERENCES:

(A) TO PAH-TSH-5392 ON DWG. 20495.
(B) TO TCV-6335 ON DWG 20507.
(C) TO FCV-6497 ON DWG 20509.

5). FILTER DIFFERENTIAL PRESSURES & REQUIRED FLOW:

FILTER TAG NO	CLEAN FLOW CFM	DIRTY FLOW CFM	ANSI DIRTY FLOW CFM	SURVEILLANCE TEST FLOW CFM	SURVEILLANCE TEST FLOW + 10% CFM	SURVEILLANCE TEST FLOW - 10% CFM
PAH-F-16	43200	39225	38125	40663	44729	36597

6). △ INDICATES REVISION LEVEL

7). AIR SAMPLE STATION

REV	DATE	DSGN	DRWN	CHKD	CDE	SES	DESCRIPTION
18	. . / . .	DWS	—	RWS	BWS	. .	INCORP MMOD 970618 DCN#08
17	10/23/98	MPW	—	MRB	JWB	GG	INCORPORATED MMOD 98-523 DCN 00
16	8/18/97	MPW	—	BCS	DWS	VWS	INCORPORATED MMOD 96-558 DCN 01
15	4/24/97	DWS	—	BCS	MPW	JPS	INCORPORATE MMOD 980571 CA#10
14	10/11/96	BCS	—	DWS	MPW	WF2	INCORPORATED MMOD 96-649 CA#8
13	1/19/96	BCS	—	MPW	WNF	BAW	REINCORP. DCR 98-005 CA8
12	6/12/95	BCL	—	DWS	MPW	DJH	INCORPORATED MMOD 94-578 CA#8
11	12/6/94	DWS	—	MPW	BCL	MRD	INCORPORATED MMOD 930245 CA#8
10	12/7/93	MRB	—	BCL	DWS	RSG	INCORPORATED DCR 98-005 CA8
9	12/13/89	MRB	RMC	HP	APL	WFD	ADDED CONTINUATIONS TO AND FROM RM-SKD-59
8	9/29/89	MRB	RMC	PAL	MPW	RRC	INCORPORATED DCR 88-12 CA ADDED SYS PREFIX PER SIS VERIFICATION REVISED NOTE 2
7	4/27/89	GPM	FCB	PAL	APL	MAC	INCORP DCR 86-555 CA 9
6	4/21/89	MRB	RMC	GPM	PAL	MAC	INCORPORATED DCR 87-265 CA 4 RE-INCORPORATED DCR 86-564 CA-2
5	8/18/88	MPW	JM	BCL	DWS	MAC	INCORP ECA 99/115097C & DCR 87-37 ADDED INSTR. TIE-INS & NEW PAID PER M-586607, DELETED SYMBOL LEGEND, REVISED DP-303 TO DP-302 DWG 584180.
4	4/9/87	DAP	HIW	LFC	BCL	MAC	REISSUED TO RESOLVE PREVIOUS REV 3 SIGNOFF DATE ERROR.
3	3/13/87	PAL	DWS	MRJ	BCL	MAC	CORRECTED INSTRUMENTATION TO REFLECT AS-BUILT CONDITION, ADDED REF. DWGS TO REF FLAGS & NOTE 6. CORRECTED DRAFTING ERROR OF PAH-FAN FROM 88 TO 88 & DCR 86-564 CA-2
2	12/23/86	JDM	OPD	MRJ	MPW	MHC	ADDED P&ID LEGEND NOTE & CONT DWG COORDS, CORRECTED CONT DWGS. INCORP ECA'S 99/112947F,98/117935A,98/118237A 86/1183384, ADDED LINE NUMBER
1	10/3/86	JDM	DWS	MAP	BCL	RRC	INCORP ECA 98/11784BA, 86/802008B & 98/118017A
0	6/12/86	JDM	SKN	DWS	DFM	WFD	ISSUED FOR OPERATIONS AND INCORP. ECA 99/124128

REF. DRAWING NO.	REV	TITLE
9763-F-604108	18	PAB VENTILATION SYSTEM, AIR FLOW, SHT. 1

North Atlantic Energy Service Corporation

SEABROOK STATION

MISCELLANEOUS AIR HANDLING PAB EL. 53'-0" & 81'-0" DETAIL

PID- 1-MAH-B20494

03/12/99

PID- 1-MAH-B20495

PRIMARY COMPONENT COOLING HEAT EXCHANGER AREA

TWO EMERGENCY EXHAUST FAN FILTER UNITS (ONE STANDBY)

FOR P&ID REFERENCE DRAWINGS, SYMBOLS AND ABBREVIATIONS REFER TO DRAWINGS P&ID - LEGEND 1 AND P&ID - LEGEND 2

NOTES:

1. WORK THIS DWG. WITH DWGS. 28492, 28494 & 28496 THRU 28588.
2. SYSTEM PREFIXES:
   PAH - PRIMARY AUX. BLDG. AIR HANDLING
   EAH - CONTAINMENT ENCLOSURE AIR HANDLING
   FAH - FUEL STORAGE BLDG. AIR HANDLING
   CAP - CONTAINMENT AIR PURGE
   SS - SAMPLE SYSTEM
3. FOR SYMBOL LEGEND SEE NOTE 3 ON DWG. MAH 28494.
4. INSTRUMENT REFERENCES:
   (A) TO PAH-FN-147 ON DWG. MAH 28494.
5. COMPONENT COOLING FOR THE COOLING COILS IN AC-2A & 2B ARE ON DWGS 1-CC-20205 & 1-CC-20211 RESPECTIVELY.
6. FILTER HOUSING DIFFERENTIAL PRESSURES & REQUIRED FLOWS:

FILTER TAG NO	CLEAN FLOW CFM	DIRTY FLOW CFM	ANSI DIRTY FLOW CFM	SURVEILLANCE TEST FLOW CFM	SURVEILLANCE TEST FLOW + 10% CFM	SURVEILLANCE TEST FLOW - 10% CFM
EAH-F-9	2275	2100	2825	2100	2310	1890
EAH-F-69	2275	2100	2825	2100	2310	1890

7. △ INDICATES REVISION LEVEL
8. AIR SAMPLE STATION

PORTIONS OF THIS DRAWING ARE
NUCLEAR SAFETY RELATED

REV	DATE	DSGN	CHKD	CE	DESCRIPTION
15	10-27-05	BCS	JM	RRB	INCORP MSE 02-289 REV. 00 & RFI 98/117934A (REF. CR 05-09825 REV. 00)
14	1/10/02	MPW	JM	RRB	INCORP DCR 01-002 DCN 00
13	6/9/99	DWS	RWS	DJM	INCORP MMOD 97-618 DCN 00
12	6/2/98	DRL	BCS	YWS	INCORP. MMOD 97-521 DCN 00
11	6/12/95	BCL	DWS	DJM	INCORP. MMOD 94-570 CA0
10	12/9/94	MPW	BCL	MHD	INCORP MMOD 93-545 CA 0.
9	5/11/92	MRB	BCL	GPM	INCORP. MMOD 91-622 CA0
8	8/16/91	MRB	JM	IW	INCORP. DCR 86-554, CA0
7	4/27/89	GPM	PAL	MAC	INCORPORATED DCR 86-555 CA 9
6	4/21/89	MRB	GPM	MAC	INCORP. DCR 87-265 CA 4, ADDED DP NUMBERS PER UE&C P&ID 9763-F-684108 NOTE 7
5	6/8/87	MPW	DWS	MAC	INCORP DCR 86-724
4	2/24/87	WDS	MRJ	MAC	CORRECTED INSTRUMENTATION TO REFLECT AS-BUILT CONDITION. REV'D REF. DWG'S & INCORP. DCR 528 & 564
3	1/3/87	JDM	BCL	MAC	INCORP DCR 574
2	12/23/86	JDM	PAL	MAC	INCORP. ECA'S 98/117935B,86/115615B,99/112947F, 98/117851A & 98/118386F, MOVED PDIS 5378 & PDIS 5377 TO MAH-B20494, ADDED PID LEGEND NOTE, CONT. DWG COORDS. REF DWG. & LINE NUMBERS, ESTABLISHED CORRECT TIE-IN LOCATION OF SS LINES PER REVIEW OF DWG 884978.
1	9/12/86	JDM	MAP	RRC	INCORP ECA 98/117840A
0	6/12/86	DWS	JDM	WFD	ISSUED FOR OPERATIONS AND INCORP. ECA 99/112947B

REF. DRAWING NO.	REV	TITLE
9763-F804978	5	SAMPLE SYSTEM POST ACCIDENT P&ID
9763-F-684116	12	PAB & FUEL STORAGE BLDG. VENTILATION DIA
9763-F-684108	18	PAB VENTILATION, AIR FLOW DIA.

FPL ENERGY Seabrook Station

MISCELLANEOUS AIR HANDLING PAB & CONTAINMENT ENCLOSURE VENTILATION AREA DETAIL

PID- 1-MAH-B20495

PAB, FLR. EL. 25'-0"
△ ALL DUCTWORK UNLESS NOTED

10/25/05

PID- 1-MAH-B20496

NHY P10204A3.DGN

BELOW EL. 25'-6" | EL. (-) 50'-0" | EL. (-) 61'-0"

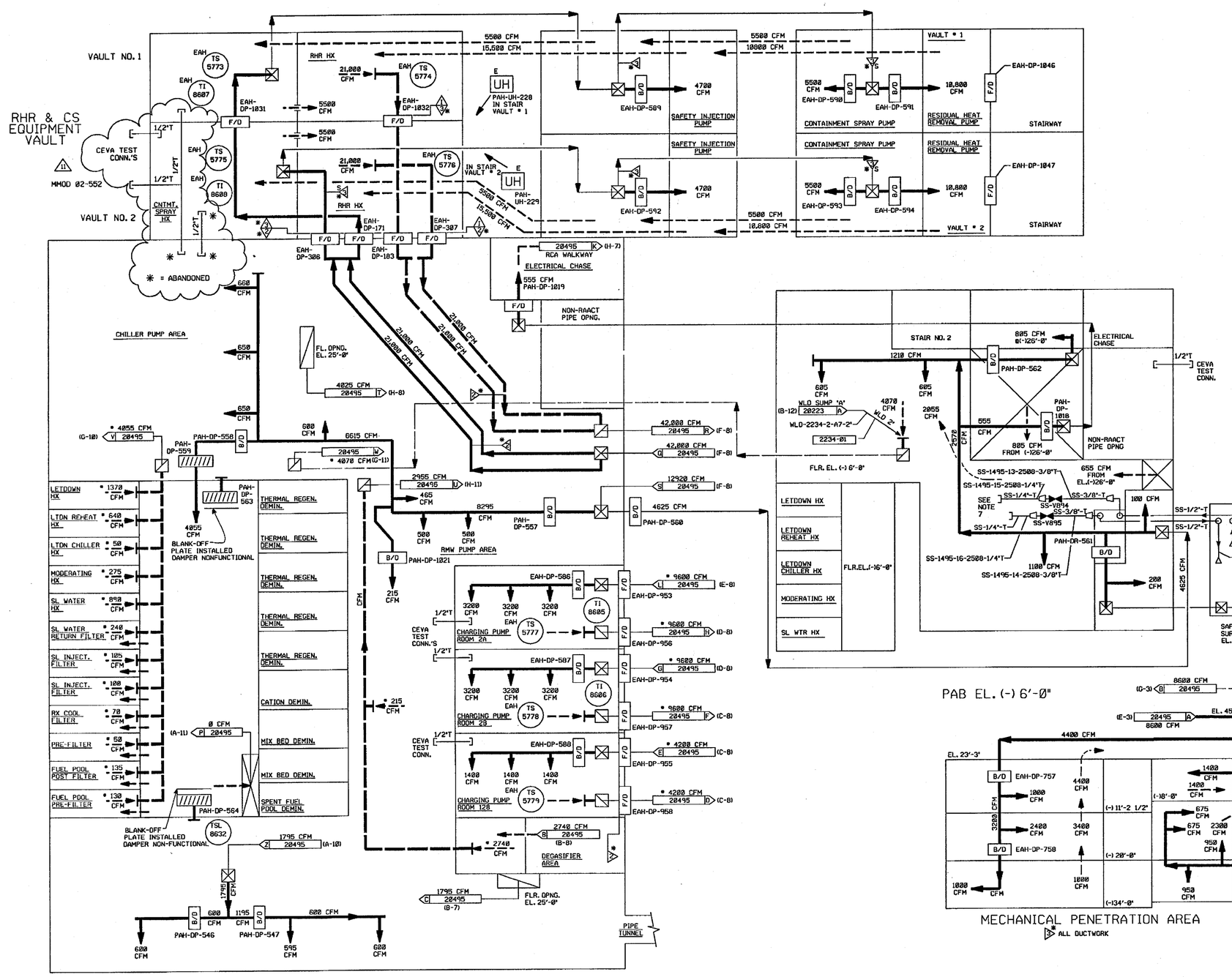

FOR P&ID REFERENCE DRAWINGS, SYMBOLS AND ABBREVIATIONS REFER TO DRAWINGS P&ID - LEGEND 1 AND P&ID - LEGEND 2

NOTES:

1. WORK THIS DRAWING WITH 20492, 20494, 20495 & 20497 THRU 20508.
2. SYSTEM PREFIXES:
   PAH - PRIMARY AUX. BLDG. AIR HANDLING
   EAH - CONT. ENCLOSURE AIR HANDLING
   CDP - CONTAINMENT ON-LINE PURGE
   SS - SAMPLE SYSTEM
3. 1 ALL DUCTWORK, UNLESS NOTED.
4. FOR SYMBOL LEGEND, SEE NOTE 3 ON DWG. MAH 20494.
5. * DENOTES AIR FLOW RATE AT ANSI N-510-1980 TEST REQUIREMENT.
6. 2 INDICATES REVISION LEVEL
7. AIR SAMPLE STATION

PORTIONS OF THIS DRAWING ARE

NUCLEAR SAFETY RELATED

REV	DATE	DSGN	CHKD	CE	DESCRIPTION
11	9/8/03	BCS	JM		INCORP MMOD 02-552 DCN#00
10	6/5/99	DWS	RWS	DJM	INCORP MMOD 970618 DCN#00
9	6/12/96	BCL	DWS	DJM	INCORP MMOD 94-578 CA#0
8	12/9/94	DWS	BCL	MHD	INCORP MMOD 930545 CA#0
7	8/16/91	MRB	JM	IW	INCORP. DCR 86-554, CA0
6	2/5/90	MRB	APL	IW	INCORP. DCR 86-572 CA 02
5	4/21/89	MRB	GPM	MAC	INCORP. DCR 87-265 CA 4 REVISED NOTES 1,4 ADDED NOTE 6 AND P&ID LEGEND NOTE
4	6/8/87	MPW	DWS	MAC	INCORP DCR 86-724 ADDED TS-5776 PER SIS LIST. REVISED EAH-DP-747 TO EAH-DP-757 PER EQUIPMENT LIST
3	4/24/87	WDS	PAL	MAC	INCORP DCR 528
2	12/28/86	JDM	PAL	RRC	ADDED CONT REF COORDS, INCORP. ECA 86/112930A. REMOVED 8" CDP LINES FROM THIS DWG. THESE LINES ARE DETAILED ON DWG MAH-20504.
1	10/17/86	JDM	MPW	RRC	ADDED LINE NO & ISOMETRIC NO TO WLD LINE. ADDED REFERENCE DRAWING. RESOLVED CHANGE ITEM NO 1 PER REVIEW OF UE&C DWG 804959 INCORP ECA 86/118325A
0	06/12/86	DWS	JDM	WFD	ISSUED FOR OPERATIONS

REF. DRAWING NO.	REV	TITLE
9763-F-804959	4	FLOOR & EQUIP DRAIN SYSTEM PAB P&ID SHT 2
9763-F-804116	12	PAB & FUEL STOR. VENT. SYS., AIR FLOW DIAGRAM

FPL ENERGY — Seabrook Station

MISCELLANEOUS AIR HANDLING PAB & RHR VAULTS DETAIL

PID- 1-MAH-B20496

09/08/03

PID- 1-MAH-B20493

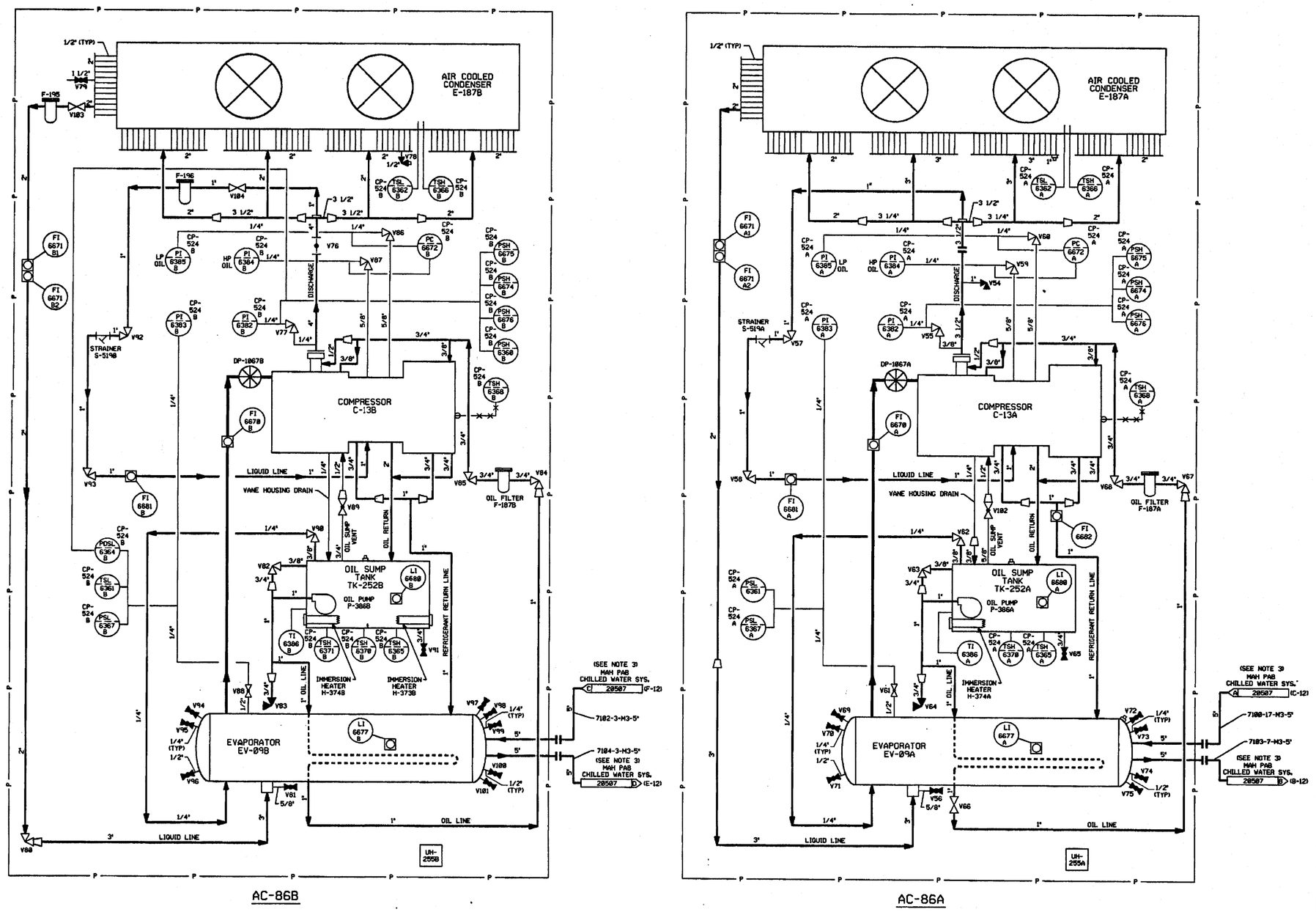

FOR P&ID REFERENCE DRAWINGS, SYMBOLS AND ABBREVIATIONS REFER TO DRAWINGS P&ID - LEGEND 1 AND P&ID - LEGEND 2

NOTES:

1. ALL LINES, EQUIPMENT, COMPONENTS AND INSTRUMENTS HAVE SYSTEM PREFIX PAH UNLESS NOTED.
2. WORK THIS DRAWING WITH DRAWINGS 20492 & 20494 THRU 20508.
3. NORMALLY ONE PUMP AND ONE CHILLER OPERATE AT A TIME. THE OTHER PUMP AND CHILLER SERVE AS STANDBY EQUIPMENT.
4. ALL LINES, EQUIPMENT, COMPONENTS AND INSTRUMENTS ARE SAFETY CLASS NNS, UNLESS NOTED OTHERWISE.
5. CHILLED WATER CONSISTS OF WATER WITH 40% GLYCOL (BY WEIGHT) ADDED FOR FREEZE PROTECTION.
7. △ - INDICATES REVISION LEVEL.

REV	DATE	DSGN	DRWN	CHKD	CE	LDE	DESCRIPTION
0	8/6/92	DWS	JM	BCL	MRB	CRM	FIRST ISSUE PER MMOD 90-571, CA0,CA5

PSNH — PUBLIC SERVICE OF NEW HAMPSHIRE

SEABROOK STATION

MISCELLANEOUS AIR HANDLING PAB CHILLED WATER SYSTEM

PID- 1-MAH-B20493

REF. DRAWING NO.	REV	TITLE
9763-F-612043	2	PAB CHILLED WATER SYSTEM (PAH) P&ID

06/23/92

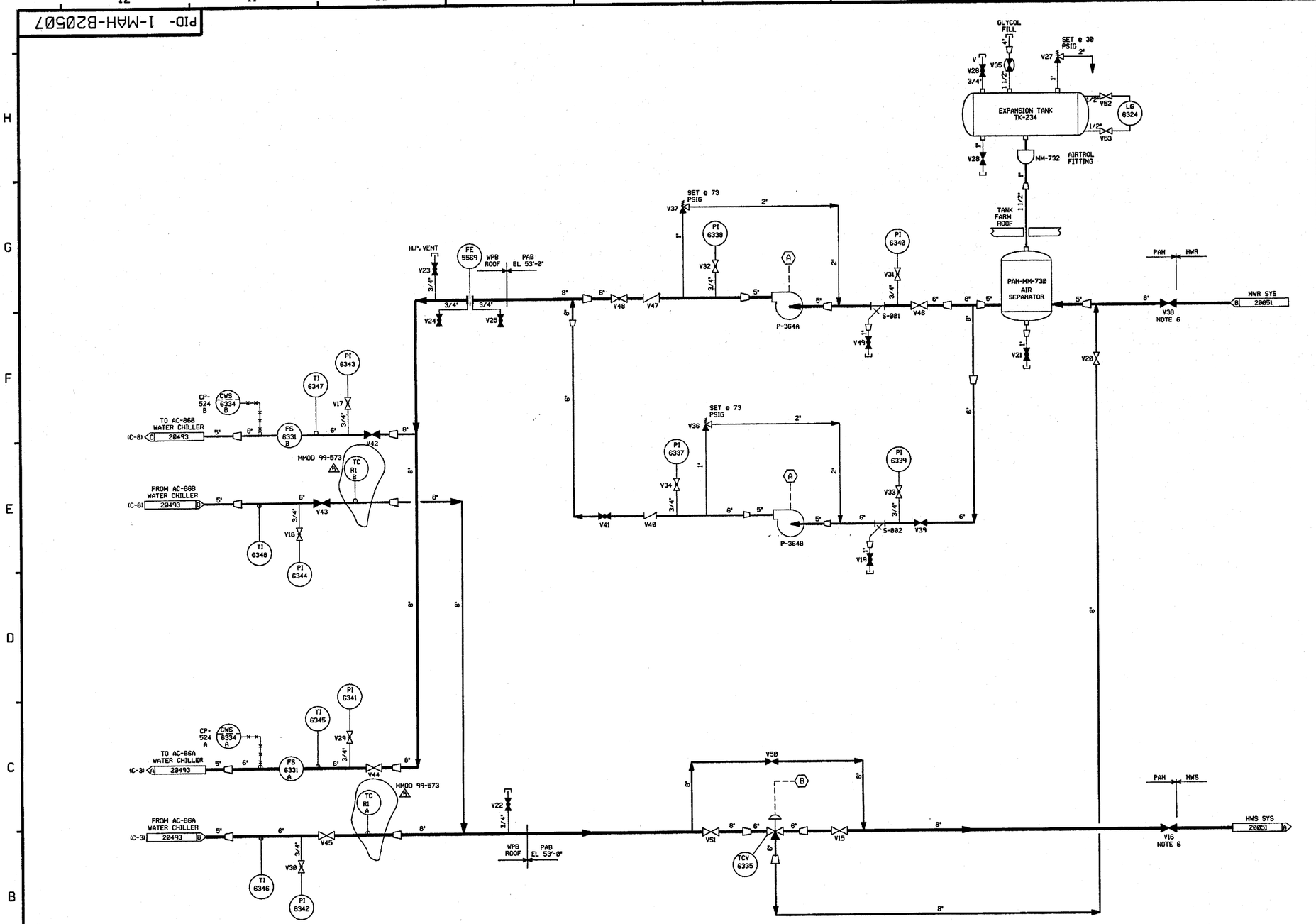

FOR P&ID REFERENCE DRAWINGS, SYMBOLS AND ABBREVIATIONS REFER TO DRAWINGS P&ID - LEGEND 1 AND P&ID - LEGEND 2

NOTES:

1. ALL LINES, EQUIPMENT, COMPONENTS AND INSTRUMENTS HAVE SYSTEM PREFIX PAH UNLESS NOTED.
2. WORK THIS DRAWING WITH DRAWINGS 20492, 20493 AND 20494 THRU 20506 & 20508.
3. NORMALLY ONE PUMP AND ONE CHILLER OPERATE AT A TIME. THE OTHER PUMP AND CHILLER SERVE AS STANDBY EQUIPMENT.
4. ALL LINES, EQUIPMENT, COMPONENTS AND INSTRUMENTS ARE SAFETY CLASS NNS, UNLESS NOTED OTHERWISE.
5. CHILLED WATER CONSISTS OF WATER WITH 40% GLYCOL (BY WEIGHT) ADDED FOR FREEZE PROTECTION.
6. VALVES NORMALLY CLOSED, USED FOR SUMMER OPERATION ONLY.
7. △ - INDICATES REVISION LEVEL.
8. INSTRUMENT REFERENCES:
   - (A) FROM CP-507
   - (B) FROM TIC-6335 ON DWG 20494

REV	DATE	DSGN	DRWN	CHKD	CDE	SES	DESCRIPTION
5	7/24/00	BCS	—	DWS	JWB	[illegible]	INCORP. MMOD 99-573 DCN-00
4	8/6/92	MRB	FCB	JM	BCL	GRM	INCORP. MMOD 90-571, CA0 REVISED NOTE 4 PER NHY ENG DESIGN STD 31780 SEC 3.0 CLARIFIED LINE SIZE ON S-001
3	6/8/87	JDM	TAK	DWS	BCL	MAC	VALVES V42 & V43 SHOWN CLOSED, VALVES V44 & V45 SHOWN OPEN, INCORP ECA 99/115097C, APPROVED CHANGE ITEM 1 PER FIELD COMPLETION OF IIL PAH-384
2	3/6/87	WDS	TAK	MRJ	BCL	RRC	UPDATE IMPULSE DESIGNATION BETWEEN TIC 6335 & TCV 6335, ADDED NIPPLE & CAP ON VLVS V26 & V28 PER ERECTION ISO'S, ADDED P&ID LEGEND NOTE, REVISED REF DWG REVISION NO, REVISED CHILLER ARRANGEMENT PER CHANGE ITEM ◇1, CORRECTED DRAFTING ERRORS.
1	9/12/86	JDM	DWS	MAP	BCL	RRC	INCORP ECA 99/117512A & ECA 99/117529A
0	6/13/86	WES	WES	JDM	DFM	WFD	ISSUED FOR OPERATIONS AND INCORP. ECA'S 06/114689A & 19/002742A

REF. DRAWING NO.	REV	TITLE
9763-F-612043	2	PAB CHILLED WATER SYSTEM (PAH) P&ID

North Atlantic Energy Service Corporation

SEABROOK STATION

MISCELLANEOUS AIR HANDLING
PAB
CHILLED WATER SYSTEM

PID- 1-MAH-B20507

07/19/00

P&ID- 1-MAH-B20508

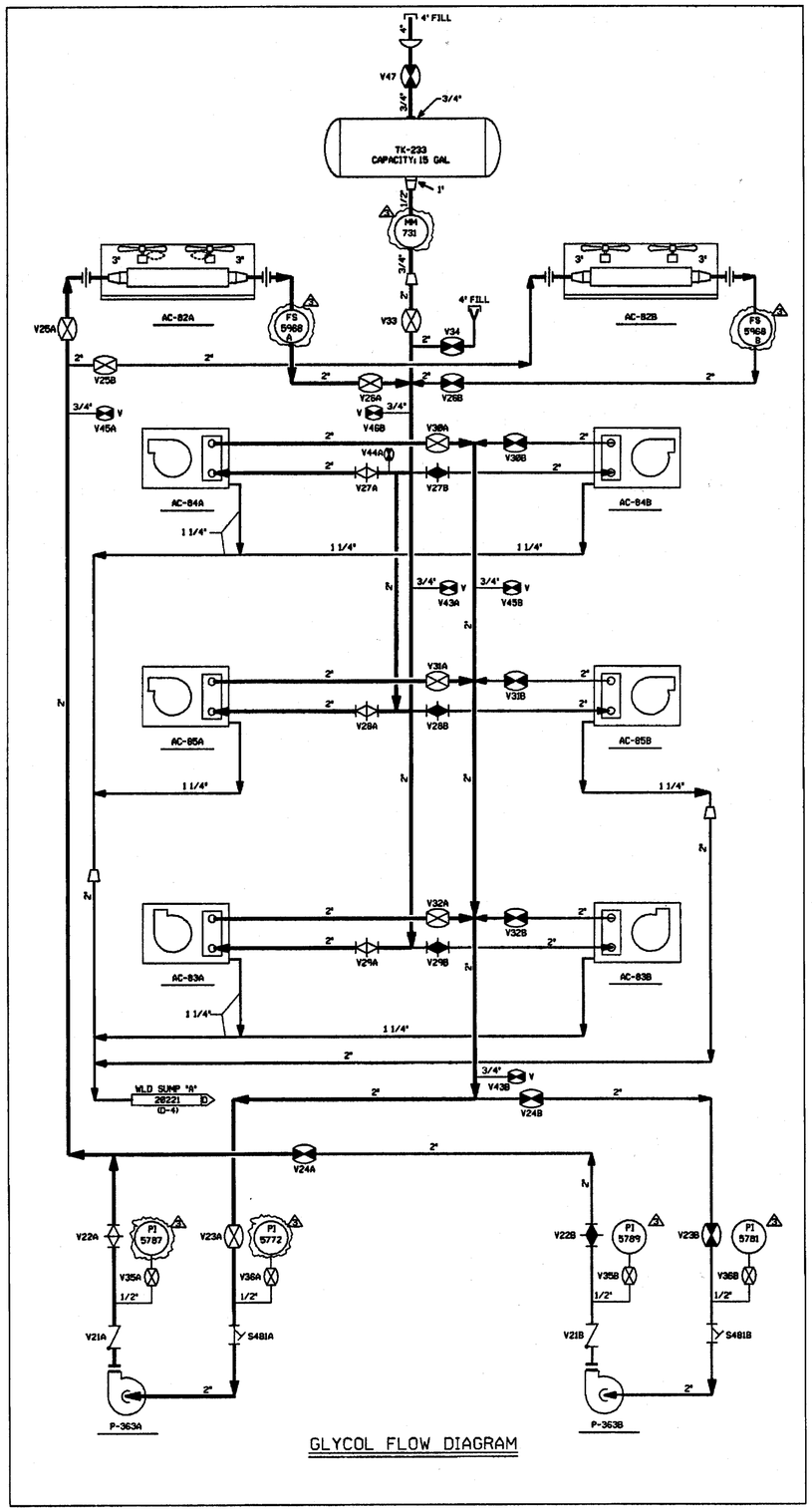

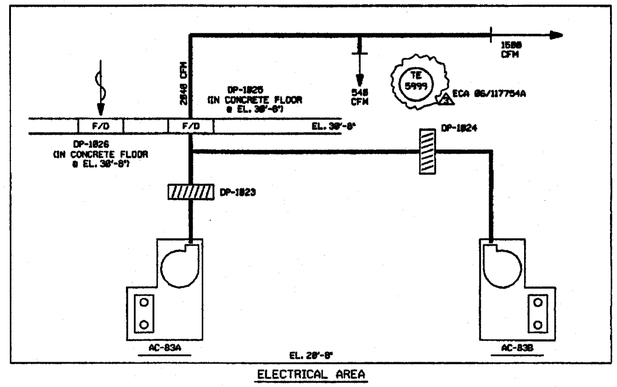

ELECTRICAL AREA

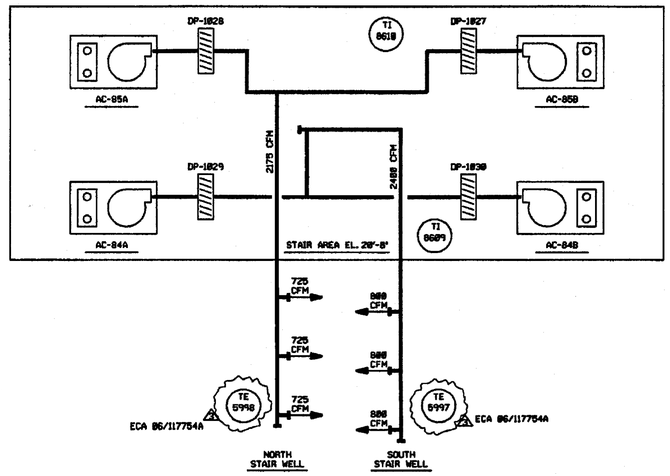

AIR FLOW DIAGRAM

FOR P&ID REFERENCE DRAWINGS, SYMBOLS AND ABBREVIATIONS REFER TO DRAWINGS P&ID - LEGEND 1 AND P&ID - LEGEND 2

NOTES:
1. WORK THIS DRAWING WITH DRAWINGS 28492 & 28494 THRU 28507.
2. ALL PIPING, VALVES, EQUIPMENT, AND INSTRUMENTS ARE SYSTEM PREFIX 'EAH' UNLESS OTHERWISE NOTED.
3. ALL PIPING, VALVES, EQUIPMENT, AND INSTRUMENTS ARE SAFETY CLASS (NNS) UNLESS NOTED OTHERWISE.
4. △ -INDICATES REVISION LEVEL.

REV	DATE	DSGN	DRWN	CHKD	CE	LDE	DESCRIPTION
3	1/22/91	MRB	RMC	JM	APL	DJM	INCORP. ECA 86/117754A REVISED NOTE 3
2	3/16/87	OPO	HW	MRJ	BCL	MAC	ADDED 1588 CFM DESIGNATION
1	2/24/87	WDS	TAK	PAL	BCL	MAC	ADDED NOTE 4, REVISED REF DWG REVISION, INCORP DCR 528.
0	6/12/86	JDM	SKN	DWS	DFH	WFD	ISSUED FOR OPERATIONS

PSNH — PUBLIC SERVICE OF NEW HAMPSHIRE

SEABROOK STATION

GLYCOL, AIR FLOW DIAGRAM AC SYSTEM ELECTRICAL VAULT & STAIRS

PID- 1-MAH-B20508

REF. DRAWING NO.	REV	TITLE
9763-F-612041	3	GLYCOL, AIR FLOW DIAG. AC SYST. ELECT. VAULT & STAIRS

12/05/90

PID- 1-MAH-B20498

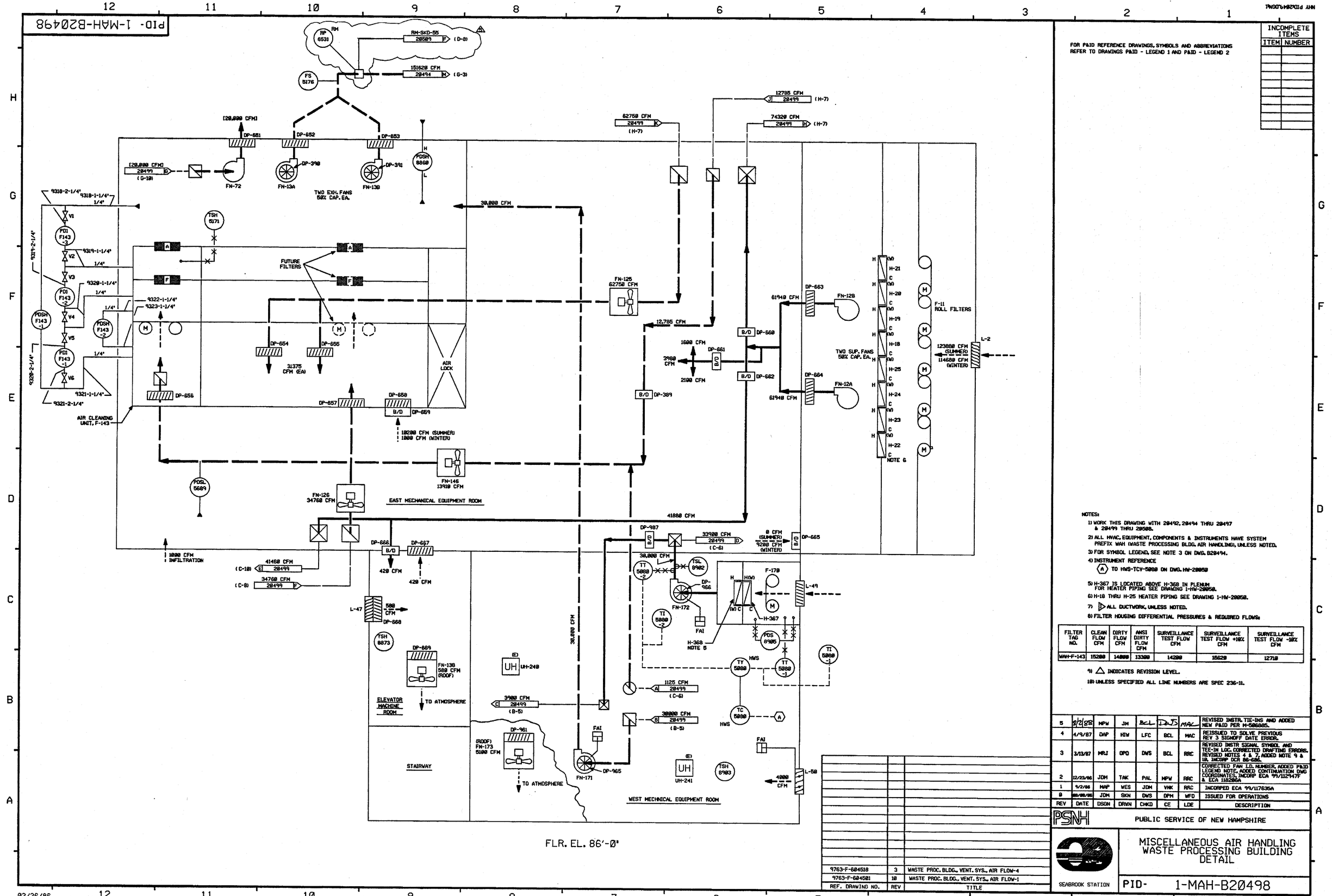

FLR. EL. 86'-Ø"

INCOMPLETE ITEMS	
ITEM	NUMBER

FOR P&ID REFERENCE DRAWINGS, SYMBOLS AND ABBREVIATIONS REFER TO DRAWINGS P&ID - LEGEND 1 AND P&ID - LEGEND 2

NOTES:

1) WORK THIS DRAWING WITH 28492, 28494 THRU 28497 & 28499 THRU 28508.
2) ALL HVAC, EQUIPMENT, COMPONENTS & INSTRUMENTS HAVE SYSTEM PREFIX WAH (WASTE PROCESSING BLDG. AIR HANDLING), UNLESS NOTED.
3) FOR SYMBOL LEGEND, SEE NOTE 3 ON DWG. B28494.
4) INSTRUMENT REFERENCE
   (A) TO HWS-TCV-5088 ON DWG. HW-28059
5) H-367 IS LOCATED ABOVE H-368 IN PLENUM FOR HEATER PIPING SEE DRAWING 1-HW-28058.
6) H-18 THRU H-25 HEATER PIPING SEE DRAWING 1-HW-28058.
7) ▷ ALL DUCTWORK, UNLESS NOTED.
8) FILTER HOUSING DIFFERENTIAL PRESSURES & REQUIRED FLOWS:

FILTER TAG NO.	CLEAN FLOW CFM	DIRTY FLOW CFM	ANSI DIRTY FLOW CFM	SURVEILLANCE TEST FLOW CFM	SURVEILLANCE TEST FLOW +10% CFM	SURVEILLANCE TEST FLOW -10% CFM
WAH-F-143	15200	14800	13300	14200	15620	12710

9) △ INDICATES REVISION LEVEL.
10) UNLESS SPECIFIED ALL LINE NUMBERS ARE SPEC 236-11.

REF. DRAWING NO.	REV	TITLE
9763-F-684518	3	WASTE PROC. BLDG., VENT. SYS., AIR FLOW-4
9763-F-684581	10	WASTE PROC. BLDG., VENT. SYS., AIR FLOW-1

REV	DATE	DSGN	DRWN	CHKD	CE	LDE	DESCRIPTION
5	8/2/88	MPW	JM	BCL	DWS	MAC	REVISED INSTR. TIE-INS AND ADDED NEW P&ID PER M-506885.
4	4/9/87	DAP	HIW	LFC	BCL	MAC	REISSUED TO SOLVE PREVIOUS REV 3 SIGNOFF DATE ERROR.
3	3/13/87	MRJ	DPO	DWS	BCL	RRC	REVISED INSTR SIGNAL SYMBOL AND TEE-IN LOC. CORRECTED DRAFTING ERRORS. REVISED NOTES 4 & 7, ADDED NOTE 9 & 10. INCORP DCR 86-586.
2	12/23/86	JDH	TAK	PAL	MPW	RRC	CORRECTED FAN I.D. NUMBER, ADDED P&ID LEGEND NOTE, ADDED CONTINUATION DWG COORDINATES. INCORP ECA 99/112947F & ECA 116286A
1	9/2/86	MAP	WES	JDH	VNK	RRC	INCORPED ECA 99/117635A
0	02/26/86	JDH	SKN	DWS	DPM	WFD	ISSUED FOR OPERATIONS

PSNH — PUBLIC SERVICE OF NEW HAMPSHIRE

SEABROOK STATION

MISCELLANEOUS AIR HANDLING WASTE PROCESSING BUILDING DETAIL

PID- 1-MAH-B20498

02/26/86

PID- 1-MAH-B20499

FOR P&ID REFERENCE DRAWINGS,SYMBOLS AND ABBREVIATIONS
REFER TO DRAWINGS P&ID - LEGEND 1 AND P&ID - LEGEND 2

REFUELING WATER STORAGE TANK AREA

STEAM GENERATOR BLOWDOWN

MOTOR CNTRL CTR & SWGR RM

BORON WASTE TANK AREA

AMB. CARBON DELAY BED

H_2 GAS COMP

AIR COND. UNIT AC-11, EL. 64'-0"

AIR COND. UNIT AC-12, EL. 64'-0"

WASTE HOPPER

WASTE PUMP

WASTE FEED TANKS

SUB COOLER

PIPE CHASE

ELEVATOR

STAIRWAY

WASTE SOLIDIFICATION AREA

WASTE GAS DRYER

IODINE GUARD BED 0 CFM

W.P.B. FLR. EL. 53'-Ø"

NOTES:

1. WORK THIS DWG WITH DWGS 20492, 20494 THRU 20498 & 20500 THRU 20508.
2. ALL HVAC, EQUIPMENT, COMPONENTS, AND INSTRUMENTS HAVE SYSTEM PREFIX WAH (WASTE PROCESSING BLDG. AIR HANDLING) UNLESS NOTED.
3. FOR SYMBOL LEGEND, SEE NOTE 3 ON DWG 20494.
4. ◁ ALL DUCTWORK, UNLESS NOTED
5. △ INDICATES REVISION LEVEL

REF. DRAWING NO.	REV	TITLE
9763-F-604503	8	WASTE PROC BLDG VENTIL. SYS AIR EL 53'0"
9763-F-604518	3	WASTE PROCESS BLDG VENTIL SYS.AIR SH. 4
9763-F-604501	10	WASTE PROCESS BLDG VENTIL SYS AIR SH. 1

REV	DATE	DSGN	DRWN	CHKD	CDE	SES	DESCRIPTION
3	8/26/98	MPW	—	LFC	BCL	MAC	INCORP. DCR 98-008 DCN 00
2	4/9/87	DAP	TAK	LFC	BCL	MAC	REVISED REV. 1 SIGNOFF DATE ERROR
1	3/13/87	WDS	MPW	MRJ	BCL	MAC	INCORP. DCR 86-686 ADDED: P&ID LEGEND NOTE, NOTE 5, DWG. CONT. COORDINATES. REVISED: REF. DWG. REV. LEVELS, PER LATEST UE&C P&ID. DELETED: "S" FROM DWG. NO. IN NOTE 1&3.
0	06/12/86	DWS	WES	JDM	DFM	WFD	ISSUED FOR OPERATIONS & INCORP. ECA'S 86/00240A & 19/1130594

North Atlantic Energy Service Corporation

SEABROOK STATION

MISCELLANEOUS AIR HANDLING WASTE PROCESSING BUILDING DETAIL

PID- 1-MAH-B20499

8/25/98

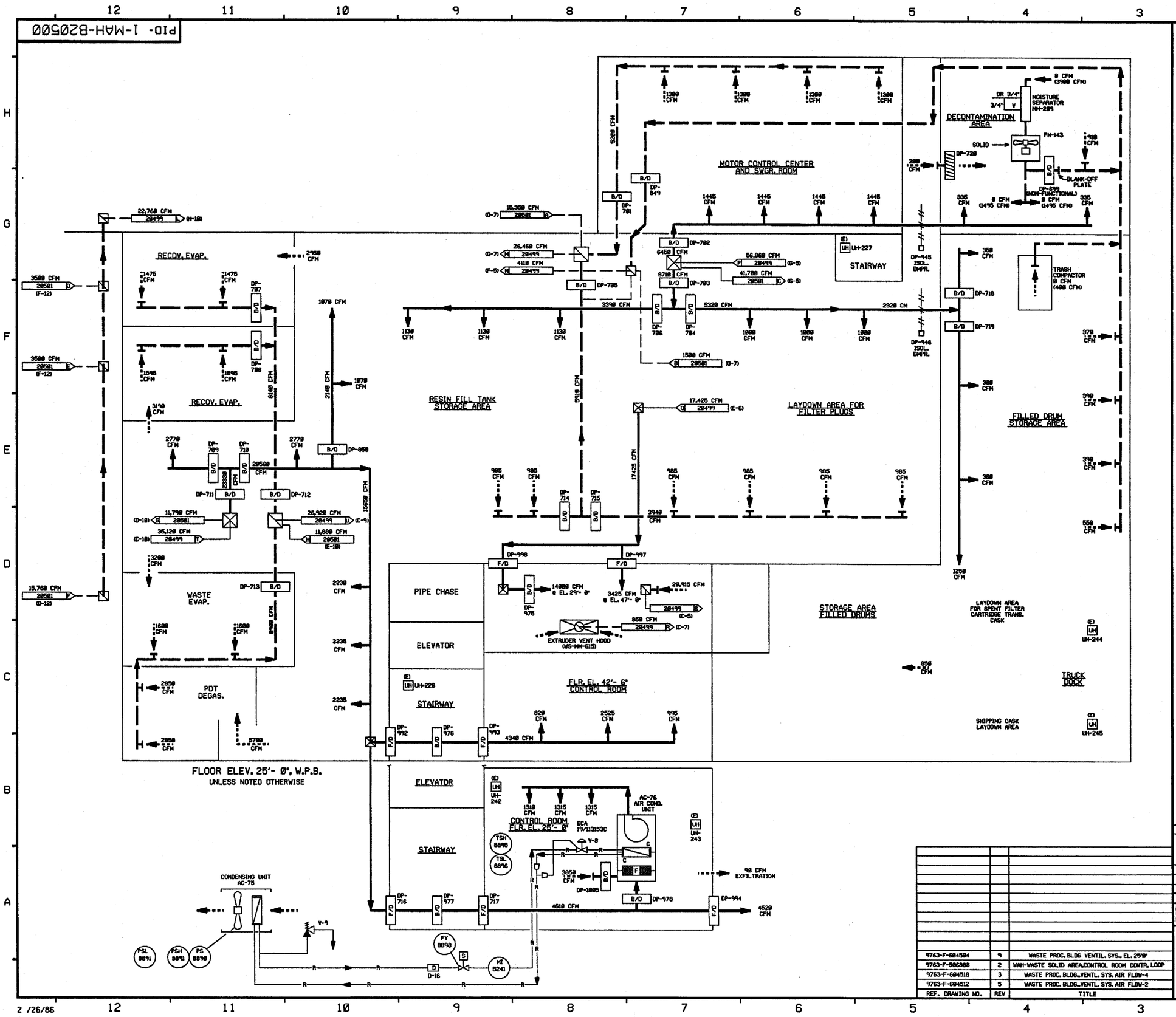

FOR P&ID REFERENCE DRAWINGS, SYMBOLS AND ABBREVIATIONS REFER TO DRAWINGS P&ID - LEGEND 1 AND P&ID - LEGEND 2

INCOMPLETE ITEMS	
ITEM	NUMBER

NOTES:

1.) WORK THIS DRAWING WITH DRAWINGS 20492, 20494 THRU 20499 & 20501 THRU 20508.
2.) ALL HVAC, EQUIPMENT, COMPONENTS & INSTRUMENTS HAVE SYSTEM PREFIX "WAH" (WASTE PROCESSING BLDG. AIR HANDLING) UNLESS NOTED OTHERWISE.
3.) FOR SYMBOL LEGEND, SEE NOTE 3 ON DRAWING 20494.
4.) ◁ ALL DUCTWORK, UNLESS NOTED OTHERWISE.
5.) △ INDICATES REVISION LEVEL

REV	DATE	DSGN	DRWN	CHKD	CE	LDE	DESCRIPTION
4	4/9/87	DAP	HIW	ZFC	BCL	MAC	REVISED REV 3 SIGNOFF DATE ERROR.
3	3/13/87	WDS	MPW	MRJ	BCL	MAC	ADDED: P&ID LEGEND NOTE 5, NOTE 5 DWG CONT & COORDINATES REVISED: REF DWG REVISIONS, SYMBOL IN NOTE 4. DELETED: "B" IN DWG NO'S FOR NOTES 1 & 3. INCORP ECA 19/113153C, DCR 86-686
2	10/07/86	JDM	DWS	MAP	BCL	RRC	INCORP ECA 98/118378A
1	9/2/86	MAP	WES	JDM	VNK	RRC	INCORPORATED ECA 99/117635A
0	06/12/86	DWS	GJS	JDM	DPM	WFD	ISSUED FOR OPERATIONS INCORP. ECA'S 86/114685A, 19/114835B, 19/113153C

PSNH PUBLIC SERVICE OF NEW HAMPSHIRE

SEABROOK STATION

MISCELLANEOUS AIR HANDLING WASTE PROCESSING BUILDING DETAIL

PID- 1-MAH-B20500

REF. DRAWING NO.	REV	TITLE
9763-F-604504	9	WASTE PROC. BLDG VENTIL. SYS., EL. 25'0"
9763-F-506888	2	WAH-WASTE SOLID AREA,CONTROL ROOM CONTR. LOOP
9763-F-604518	3	WASTE PROC. BLDG.,VENTL. SYS. AIR FLOW-4
9763-F-604512	5	WASTE PROC. BLDG.,VENTL. SYS. AIR FLOW-2

2 /26/86

P1D- 1-MAH-B20501

FLR. ELEV. 13'- 0"
PARTIAL PLAN

FLR. ELEV. (-)3'- 0"
UNLESS NOTED OTHERWISE

WASTE TEST TANK PUMPS
STAIRWAY
PIPE TUNNEL
RECOV. EVAP.
RECOV. FILTERS
RECOV. EVAP. FILTERS
RECOV. DEMIN. FILTERS
FLR. DR. FILTERS
WASTE DEMIN. FILTER
PRT DEGAS. PRE FILTER
PIPE CHASE
CESIUM REMOVAL ION EXCH.
CESIUM REMOVAL ION EXCH.
RECOVERY DEMIN.
RECOVERY DEMIN.
WASTE DEMIN.
WASTE EVAP.
DEGAS. RECIRC. PUMPS
PIPE CHASE
ELEVATOR
STAIRWAY
PRIMARY DRAIN TANKS
SPENT RESIN SLUICE FILTER
SLUICE TANK ACCESS PLUGS
SAMPLING PANEL
DCR 87-110
HORIZ. PIPE CHASE EL. 9'- 8"
HORIZ. PIPE CHASE EL. 9'- 8"
DEGAS PRT

INCOMPLETE ITEMS	
ITEM	NUMBER

FOR P&ID REFERENCE DRAWINGS, SYMBOLS AND ABBREVIATIONS REFER TO DRAWINGS P&ID - LEGEND 1 AND P&ID - LEGEND 2

NOTES:

1.) WORK THIS DRAWING WITH DRAWINGS 28492, 28494 THRU 28500 & 28502 THRU 28508.
2.) ALL HVAC, EQUIPMENT, COMPONENTS AND INSTRUMENTS HAVE SYSTEM PREFIX "MAH" (WASTE PROCESSING BUILDING AIR HANDLING), UNLESS NOTED OTHERWISE.
3.) FOR SYMBOL LEGEND SEE NOTE 3 ON DRAWING B20494.
4.) ▷ ALL DUCTWORK, UNLESS NOTED OTHERWISE.
5.) △ INDICATES REVISION LEVEL.
6.) AIR SAMPLE STATION

REV	DATE	DSGN	DRWN	CHKD	CE	LDE	DESCRIPTION
4	9/6/87	MRB	RMC	PAL	GPM	J.W.	INCORPORATED DCR 87-110 CA 11
3	4/2/87	MRB	FCB	GPM	PAL	MAC	INCORPORATED DCR 87-265 CA 4
2	4/9/87	DAP	TAK	LFC	BCL	MAC	REVISED REV. 1 SIGNOFF DATE ERROR
1	3-13-87	MRJ	GJS	DPD	BCL	MAC	ADDED CONTINUATION FLAG COORD'S AND NOTES, REVISED AIR FLOW PER UE&C. INCORP DCR 86-686
B	6/12/86	DWS	GJS	JDM	DLM	WFD	ISSUED FOR OPERATIONS

PSNH — PUBLIC SERVICE OF NEW HAMPSHIRE

SEABROOK STATION

MISCELLANEOUS AIR HANDLING WASTE PROCESSING BUILDING DETAIL

PID- 1-MAH-B20501

REF. DRAWING NO.	REV	TITLE
9763-F-684513	3	WASTE PROC. BLDG. VENTL. SYS. AIR FLOW-3

05/18/89

P10- 1-MAH-B20502

FOR P&ID REFERENCE DRAWINGS, SYMBOLS AND ABBREVIATIONS REFER TO DRAWINGS P&ID - LEGEND 1 AND P&ID - LEGEND 2

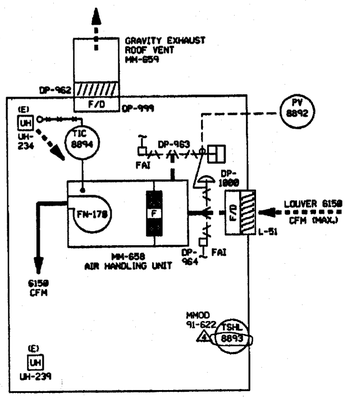

ASPHALT STORAGE ROOM

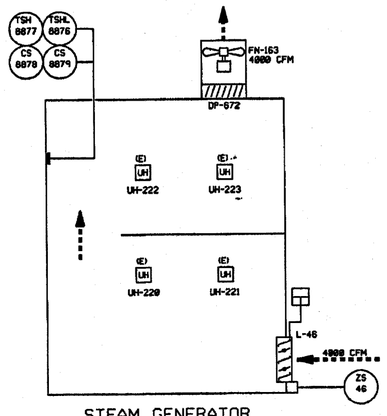

STEAM GENERATOR BLOWDOWN RECOVERY BUILDING

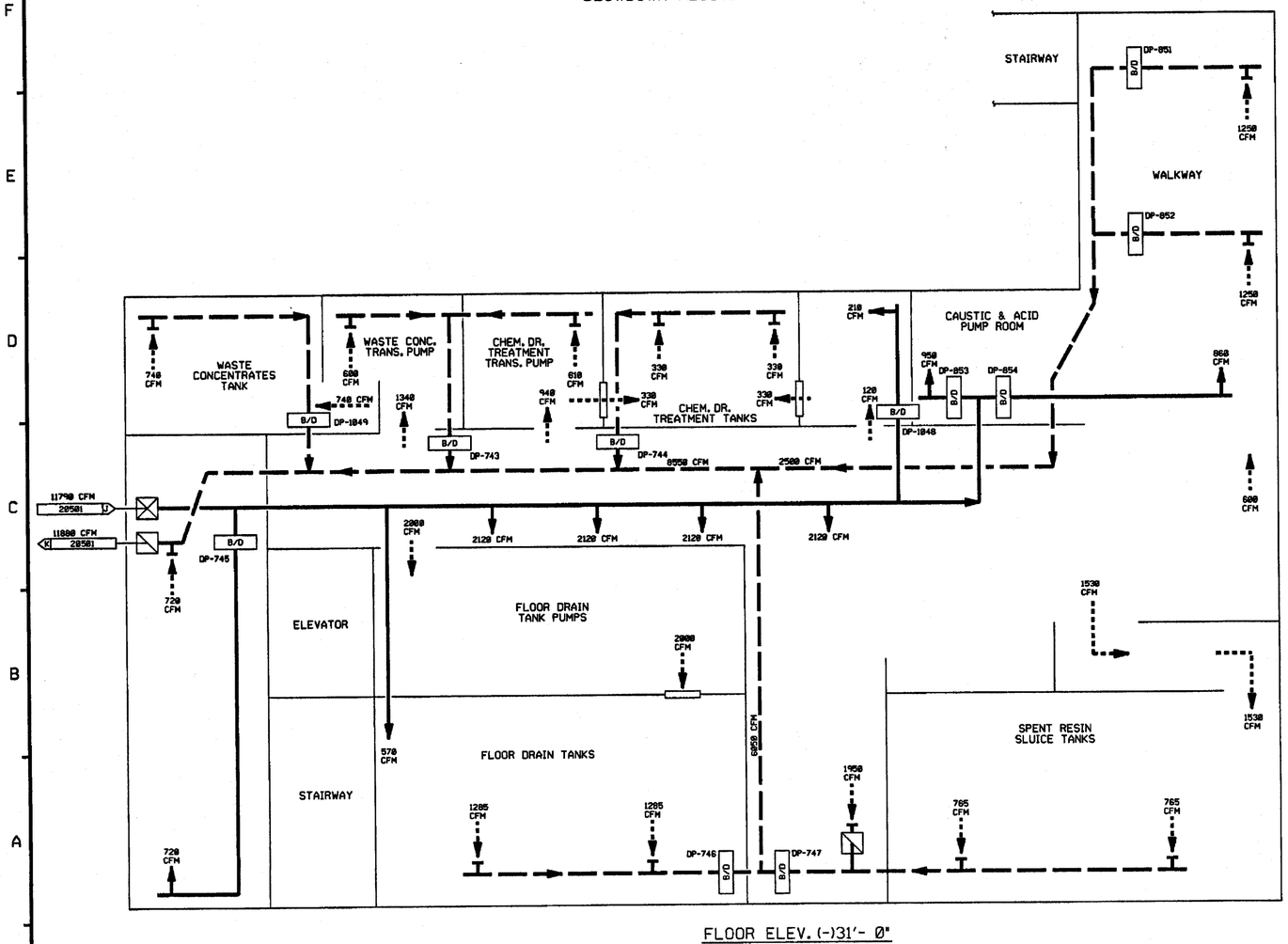

FLOOR ELEV. (-)31'- 0"

NOTES:

1.) WORK THIS DRAWING WITH DRAWINGS 28492, 28494, 28581 & 28583 THRU 28586.

2.) ALL HVAC EQUIPMENT, COMPONENTS & INSTRUMENTS HAVE SYSTEM PREFIX WAH (WASTE PROCESSING AIR HANDLING), UNLESS NOTED OTHERWISE.

3.) FOR SYSTEM LEGEND, SEE NOTE 3 ON DRAWING B28494.

4.) ▷ ALL DUCTWORK, UNLESS NOTED OTHERWISE.

5.) △ -INDICATES REVISION LEVEL.

REF. DRAWING NO.	REV	TITLE
9763-F-684516	2	WASTE PROC.BLDG.,VENTL.SYS.,AIR FLOW-4
9763-F-684501	9	WASTE PROC.BLDG.,VENTL.SYS.,AIR FLOW-1
9763-F-684513	3	WASTE PROC.BLDG.,VENTL. SYS.,AIR FLOW-3

REV	DATE	DSGN	DRWN	CHKD	CE	LDE	DESCRIPTION
4	5-31-92	NRB	—	BCL	DWS	APA	INCORP. MMOD 91-622 CA0
3	4/9/87	DAP	TAK	LFC	BCL	MAC	REVISED REV. 2 SIGNOFF DATE ERROR.
2	3/13/87	PAL	TAK	MRJ	BCL	MAC	INCORP. DCR 86-686 AND ADDED DAMPERS PER UE&C P&ID. CORRECTED DRAFTING ERRORS, ADDED NOTE 5 AND P&ID LEGEND REF NOTE.
1	9/2/86	MAP	WES	JDM	VNK	RRC	INCORPORATED ECA 99/117635A
0	06/12/86	DWS	GJS	JDM	DFM	WFD	ISSUED FOR OPERATIONS

PSNH — PUBLIC SERVICE OF NEW HAMPSHIRE

SEABROOK STATION

MISCELLANEOUS AIR HANDLING WASTE PROCESS BUILDING DETAIL OF ELEV. (-)31'- 0"

PID- 1-MAH-B20502

05/06/92

PID- 1-MAH-B20505

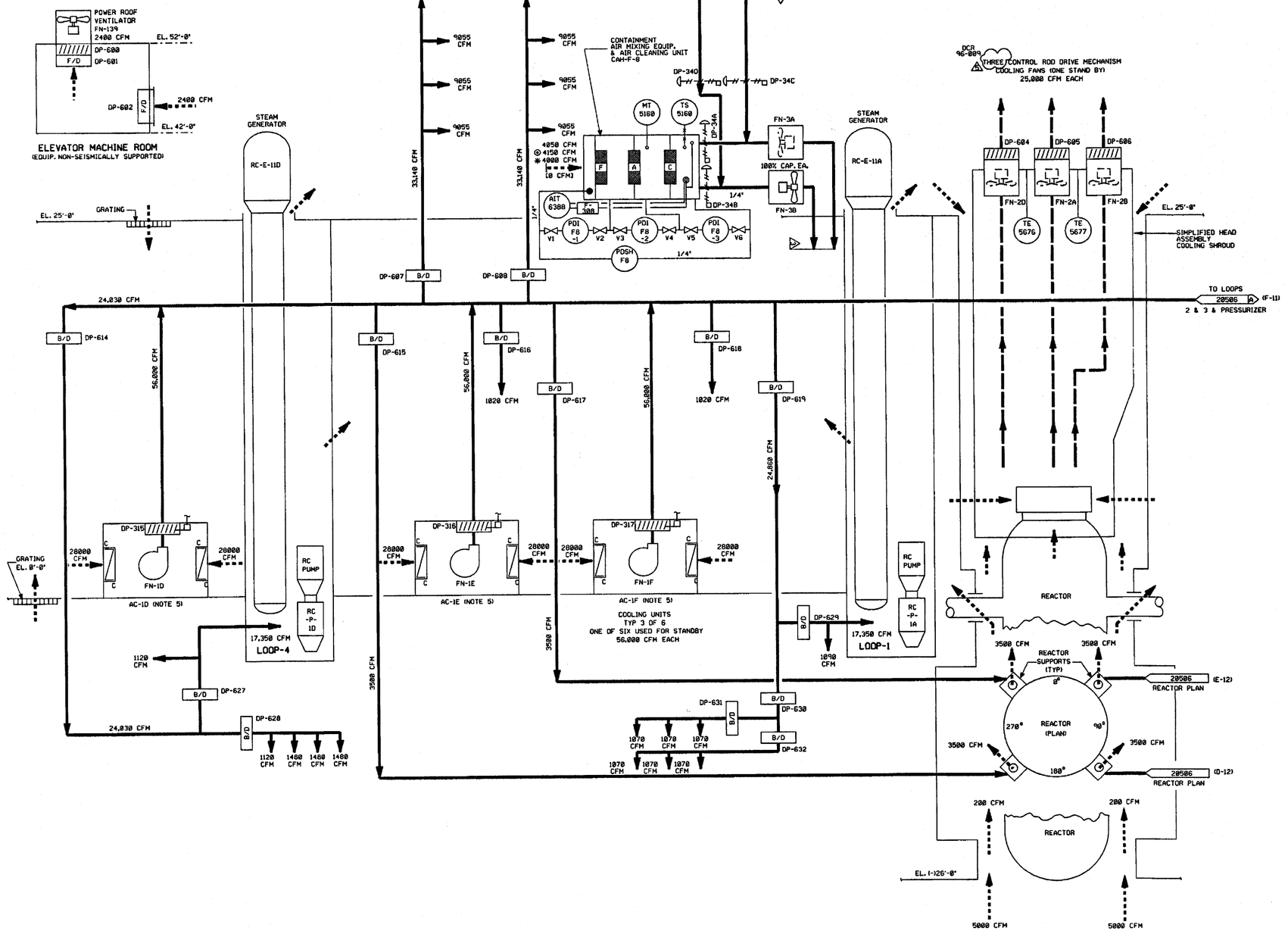

FOR P&ID REFERENCE DRAWINGS, SYMBOLS AND ABBREVIATIONS REFER TO DRAWINGS P&ID - LEGEND 1 AND P&ID - LEGEND 2

NOTES:

1). WORK THIS DWG WITH DWGS 20492, 20494 THRU 20504 & 20506.

2). ALL HVAC, EQUIPMENT, COMPONENTS & INSTRUMENTS HAVE SYSTEM PREFIX CAH (CONTAINMENT AIR HANDLING) UNLESS NOTED.

3). FOR SYMBOL LEGEND , SEE NOTE 3 ON DWG 20494.

4). ALL DUCT WORK UNLESS NOTED.

5). COMPONENT COOLING (CC) FOR THE COOLING COILS IN THE AIR CONDITIONING UNITS ARE AS FOLLOWS:
CAH-AC-1D - 1-CC-20214
CAH-AC-1E - 1-CC-20208
CAH-AC-1F - 1-CC-20207

6). FILTER DIFFERENTIAL PRESSURE AND REQUIRED FLOWS:

FILTER TAG NO.	CLEAN FLOW CFM	DIRTY FLOW CFM	ANSI DIRTY FLOW CFM	SURVEILLANCE TEST FLOW CFM	SURVEILLANCE TEST FLOW +10% CFM	SURVEILLANCE TEST FLOW -10% CFM
CAH-F-8	4150	4050	4000	4075	4482	3668

PORTIONS OF THIS DRAWING ARE

NUCLEAR SAFETY RELATED

REV	DATE	DSGN	DRWN	CHKD	CDE	SES	DESCRIPTION
5	[illegible]	BCS	—	[illegible]	[illegible]	[illegible]	RE-INCORP DCR 96-809 DCN 00
4	4/30/99	RWS	—	BCS	DWS	MRJ	INCORP DCR 96-809 DCN 00 & DCR 95-0034 DCN 00
3	5/03/94	BCL	—	MPW	DWS	JMS	INCORP MMOD 94-509 CA-0
2	4/27/89	GPM	RMC	MRB	BCL	MAC	INCORP DCR 88-555 CA 9 REVISED INSTR. DESIGNATION PER UE & C DWG. 9763-M-506134, NOTE 4 ADDED; NOTE 7
1	12/23/88	JDM	OPO	PAL	BCL	MAC	MOVED DETAIL WITH RM-SKD-68 TIES-IN TO MAH-20504. ADDED P&ID LEGEND NOTE. CONT. DWG. COORDS. INCORP. ECA 99/112947F
0	3/21/86	DWS	WES	DM	BCL	WFD	ISSUED FOR OPERATIONS INCORP. ECA 99/112947B

REF. DRAWING NO.	REV	TITLE
9763-C-505232	1	INSTR. INSTALL. PROC. AIR TO SKID 60
9763-F-604131	12	CNTMNT. STRUCT. FUEL POOL & PURGE AIR
9763-F-604128	13	CONT. STRUCT. COOL. SYS. AIR FLOW DIA.

North Atlantic Energy Service Corporation

SEABROOK STATION

MISCELLANEOUS AIR HANDLING CONTAINMENT STRUCTURE DETAIL

PID- 1-MAH-B20505

05/25/00

PID- 1-MAH-B20506

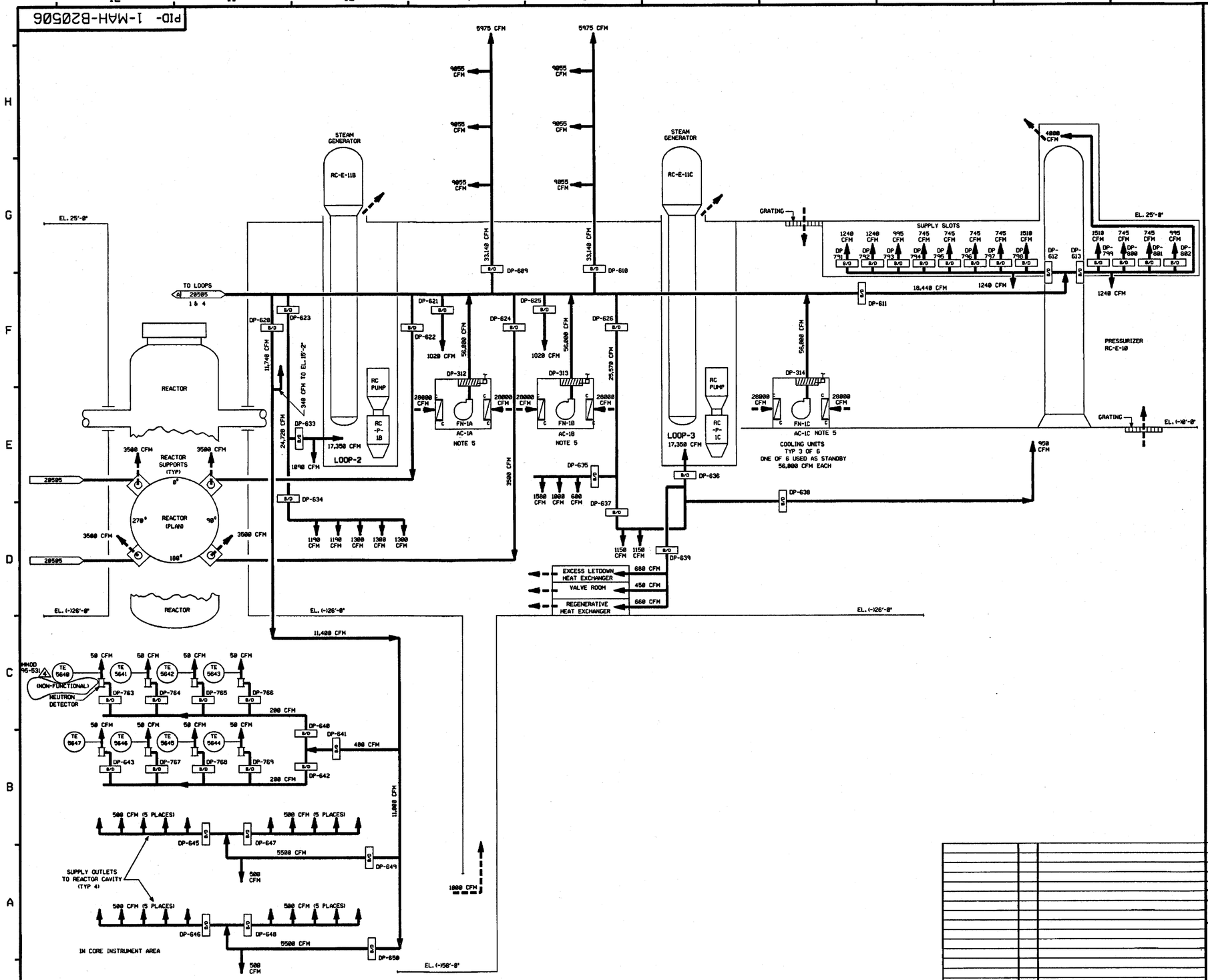

NOTES:

1). WORK THIS DWG WITH DWGS B20492 & B20494 THRU B20505.

2). ALL HVAC, EQUIPMENT, COMPONENTS & INSTRUMENTS HAVE SYSTEM PREFIX CAH (CONTAINMENT AIR HANDLING) UNLESS NOTED.

3). FOR SYMBOL LEGEND , SEE NOTE 3 ON DWG B20494.

4). ⚠ ALL DUCT WORK UNLESS NOTED.

5). COMPONENT COOLING (CC) FOR THE COOLING COILS IN THE AIR CONDITIONING UNITS ARE AS FOLLOWS:
CAH-AC-1A - 1-CC-B20215
CAH-AC-1B - 1-CC-B20214
CAH-AC-1C - 1-CC-B20208

REV	DATE	DSGN	DRWN	CHKD	COE	SES	DESCRIPTION
4		BCS	—		DwS		INCORP. MMOD 95-531 CA-0
3	11-12-95	MPW	—	BCS	MAH	MMO	INCORP. DCR 92-37 CA-0
2	6-12-95	BCL	—	DWS	MPW	DJM	INCORP. MMOD 94-570 CA-0
1	6-3-94	BCL	—	MPW	DWS	IW	INCORP. MMOD 94-509 CA-0
0	3-21-86	DWS	WES	DM	MPB	WFD	ISSUED FOR OPERATIONS

North Atlantic Energy Service Corporation

SEABROOK STATION

MISCELLANEOUS AIR HANDLING CONTAINMENT STRUCTURE DETAIL

PID- 1-MAH-B20506

REF. DRAWING NO.	REV	TITLE
9763-F-684128	11	CONT. STRUCT. COOL. SYS. AIR FLOW DIA.

06/10/96

PID- 1-MAH-B20504

RM-SKD-60

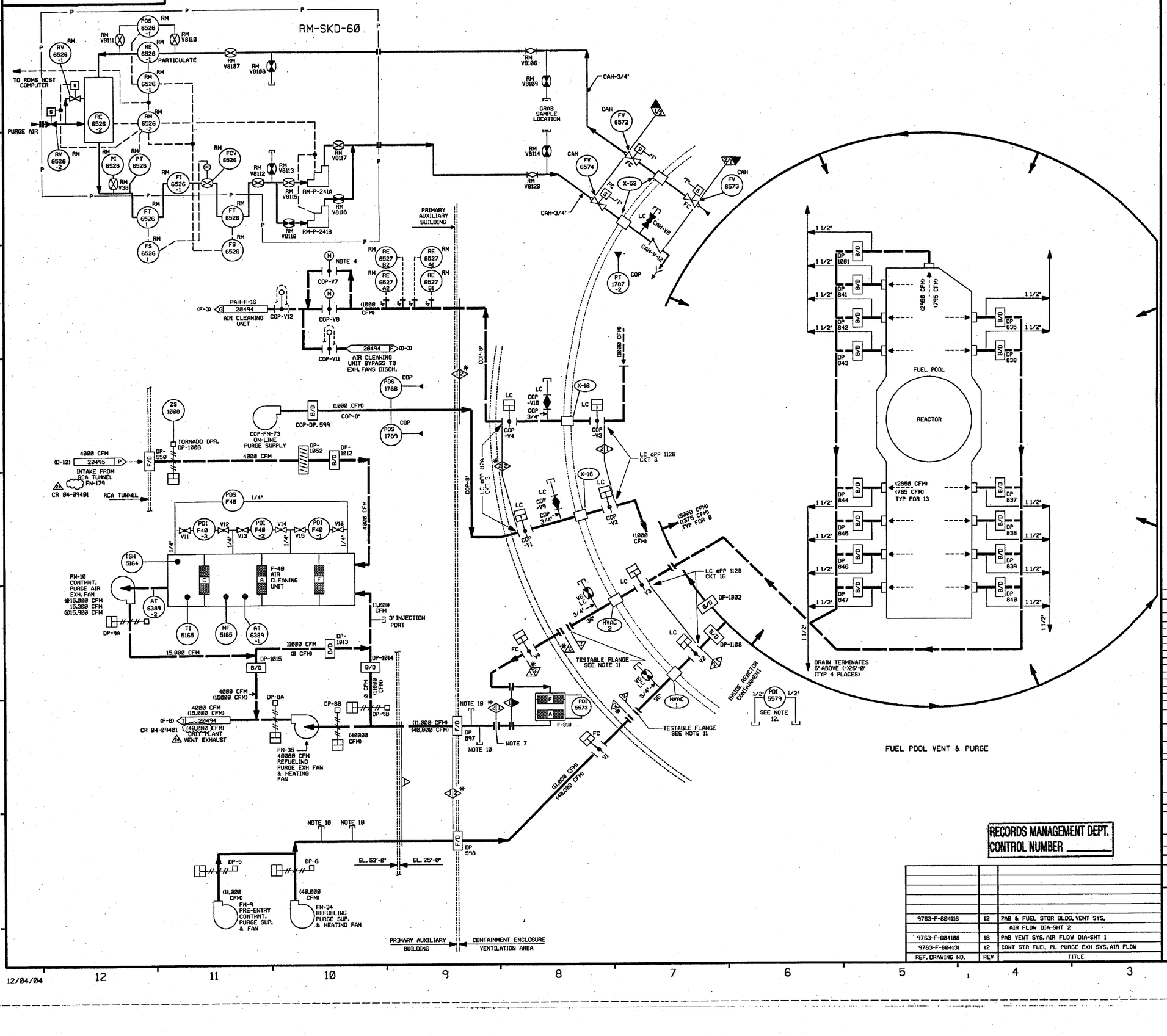

FOR P&ID REFERENCE DRAWINGS, SYMBOLS AND ABBREVIATIONS REFER TO DRAWINGS P&ID - LEGEND 1 AND P&ID - LEGEND 2

NOTES:

1. WORK THIS DRAWING WITH 28492, 28494 THRU 28503; & 28505 & 28506.
2. ALL PIPING, HVAC, EQUIP, COMPONENTS & INSTRUMENTS HAVE SYSTEM PREFIX CAP (CONTAINMENT AIR PURGE) UNLESS NOTED.
   COP - (CONTAINMENT ON-LINE PURGE)
3. FOR SYMBOL LEGEND, SEE NOTE 3 ON DWG. 28494.
4. VALVE COP-V7 IS USED FOR THROTTLING.
5. FILTER HOUSING DIFFERENTIAL PRESSURES & REQUIRED FLOWS:

FILTER TAG NO.	CLEAN FLOW CFM	DIRTY FLOW CFM	ANSI DIRTY FLOW CFM	SURVEILLANCE TEST FLOW CFM	SURVEILLANCE TEST FLOW +10% CFM	SURVEILLANCE TEST FLOW -10% CFM
CAP-F-40	15900	15300	15000	15450	16995	13905

6. VENT & DRAIN CODE BREAKS ARE AT THE DOWNSTREAM SIDE OF THE OUTER ISOLATION VALVE PER 1-NHY-885111 UNLESS OTHERWISE NOTED.
7. BLIND IS INSTALLED TO ISOLATE THE FILTER, DURING MODES 1-4 (NORMAL OPERATION). DURING MODES 5 & 6 (OUTAGES), THE BLIND WILL BE REMOVED TO ALIGN THE FILTER FOR OPERATION.
8. △ INDICATES REVISION LEVEL
9. DELETED
10. INSTRUMENT REMOVED AND LINE CAPPED.
11. TESTABLE FLANGES ARE INSTALLED DURING MODES 1-4 (NORMAL OPERATION). DURING MODES 5 & 6 (OUTAGES), THE BLIND FLANGES WILL BE REMOVED AND TRANSITION PIECES INSTALLED.
12. PDI FOR USE DURING REFUELING OUTAGES. ATTACH TEMP. TUBING TO HIGH SIDE AND ROUTE TO OUTSIDE AMBIENT.

PORTIONS OF THIS DRAWING ARE

NUCLEAR SAFETY RELATED

REV	DATE	DSGN	CHKD	CE	DESCRIPTION
24	12-8-04	BCS	JM	RRB	INCORP CR 04-09401 REV 00
23	9/4/03	BCS	JM	MKC	INCORP SYSTEM FINAL CONFIGURATION PER DCR 00-21 DCN-00
22	1/27/03	JM	MPW	BCS	INCORP CR 00-04963 REV 00, REVISED VALVE SYMBOL
21	10/28/00	DWS	BCS	MKC	INCORP DCR 000021 DCN#00
20	6/2/98	DWS	BCS	HWM	INCORP. MMOD 970618 DCN#00
19	6/2/95	DRL	MPW	VWS	INCORP. MMOD 97-521 DCN 00
18	12/2/95	MPW	BCS	RJF	INCORP. MMOD 95-588 CA-0
17	11/6/95	BCL	MPW	RRC	INCORP. DCR 95-003 CA-0
16	6/12/95	BCL	DWS	DJM	INCORP MMOD 94-570 CA0
15	4/28/94	MPW	BCL	WFZ	INCORP. DCR 92-014 CA 7
14	2/9/94	BCL	MRB	WFZ	INCORP. MMOD 93-524 CA-0
13	10/2/92	BCL	MRB	BAW	INCORP. DCR 98-14 CA14
12	4/14/92	MRB	DWS	JEV	INCORP MMOD 91-515 CA0
11	9/18/91	GPM	JM	MAC	INCORP. DCR 98-14 CA02
10	2/26/91	MRB	JM	BCL	INCORP. DCR 86-535 CA01 & MMOD 90-548 CA00.
9	1/23/90	MRB	APL	GRM	INCORP MMOD 88-586 CA 0 AND MMOD 89-583 CA 0. ADDED SYSTEM PREFIX PER NOTE 2
8	4/27/89	GPM	MRB	MAC	INCORP DCR 86-555 CA 9 REVISED VALVE SYMBOLS PER FP 73290. NOTE 6 DELETED; NOTE 7 & 9
7	5/12/87	MPW	HIW	VWS	DELETED CHANGE ITEM ◇ PER DCR 87-135.
6	4/9/87	DAP	LFC	MAC	REVISED REV 5 SIGNOFF DATE ERROR.
5	3/13/87	MRJ	JDM	MAC	REVISED SYS PREFIX FOR VLV'S ON RM-SKD-60, REVISED CAH-V8 TO GLOBE VLV PER ECA 99/1301010, ADDED SENSING LINES AND REMOVED RACK MTD. SYMBOLS PER EXISTING CONFIGURATION. ADDED NOTE 9 AND CHANGE ITEM 1.
4	12/23/86	JDM	PAL	RRC	ADDED CONTINUATION DWG COORDINATES. INCORP ECA 99/112947E
3	10/17/86	JDM	MPW	RRC	INCORP ECA 86/118099A
2	10/9/86	JDM	MAP	RRC	ADDED NOTE 7, 8 & P&ID LEGEND. INCORP DETAILS FOR RM-SKD-60. INCORP ECA 86/082001C & 98/117040A ADDED LINE SIZES & REV REF DWGS
1	6/24/86	DWS	VNK	RRC	UPDATE PER LATEST UE&C P1&D INCORP ECA 99/112947B
0	3/4/86	DWS	DM	WFD	ISSUED FOR OPERATIONS

RECORDS MANAGEMENT DEPT.
CONTROL NUMBER _____

REF. DRAWING NO.	REV	TITLE
9763-F-684116	12	PAB & FUEL STOR BLDG, VENT SYS, AIR FLOW DIA-SHT 2
9763-F-684108	18	PAB VENT SYS, AIR FLOW DIA-SHT 1
9763-F-684131	12	CONT STR FUEL PL PURGE EXH SYS, AIR FLOW

FPL ENERGY Seabrook Station

MISCELLANEOUS AIR HANDLING CONTAINMENT & PURGES DETAIL (COP, CAP)

PID- 1-MAH-B20504

12/04/04

PID- 1-MAH-B20503

NHY P10205Ø3.DGN#1

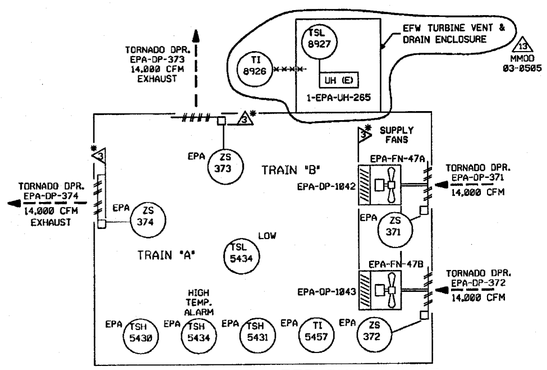

EMERGENCY FEEDWATER PUMP HOUSE

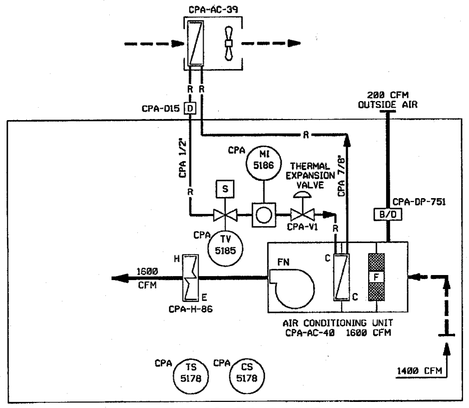

RCA CHECKPOINT

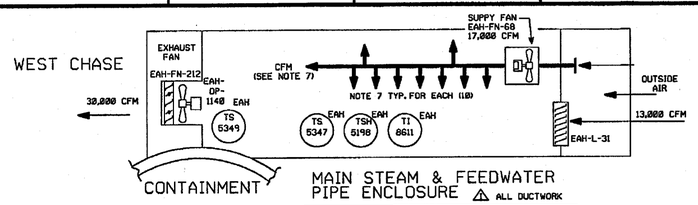

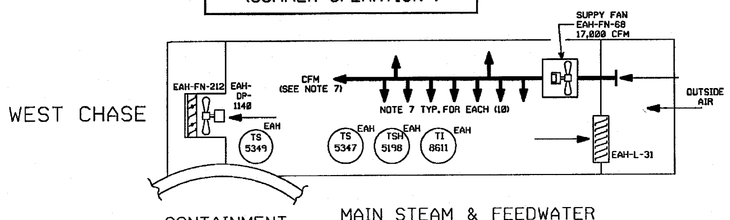

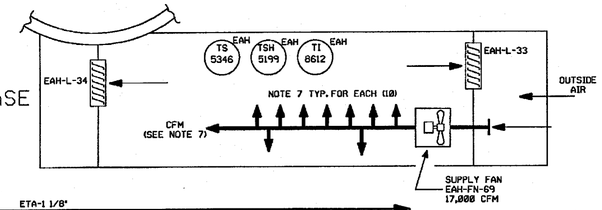

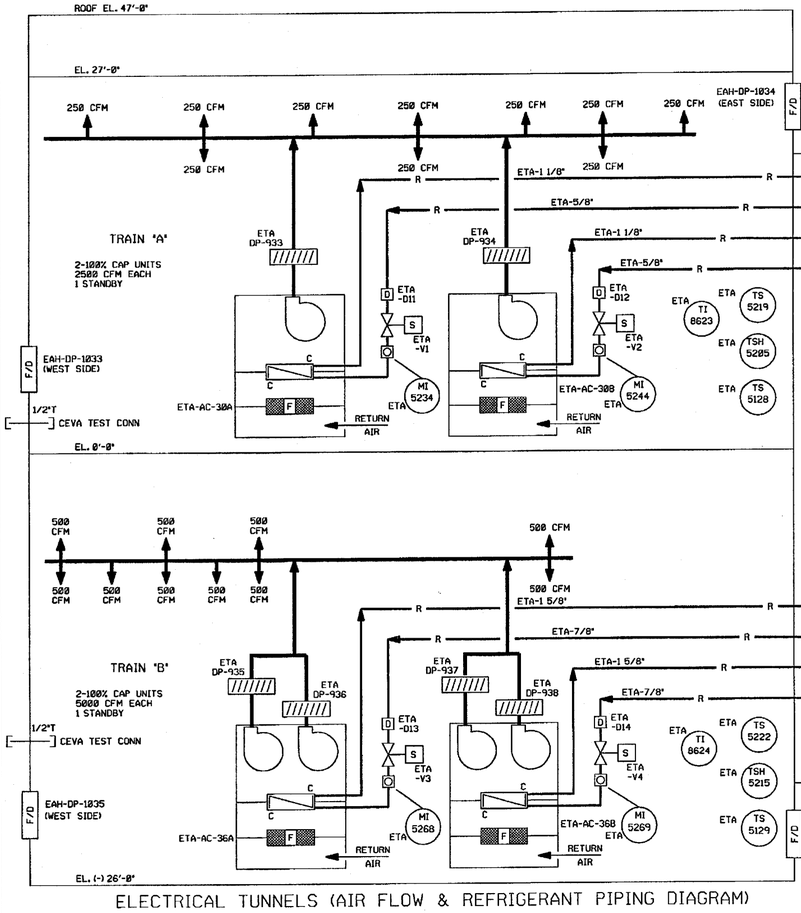

ELECTRICAL TUNNELS (AIR FLOW & REFRIGERANT PIPING DIAGRAM)

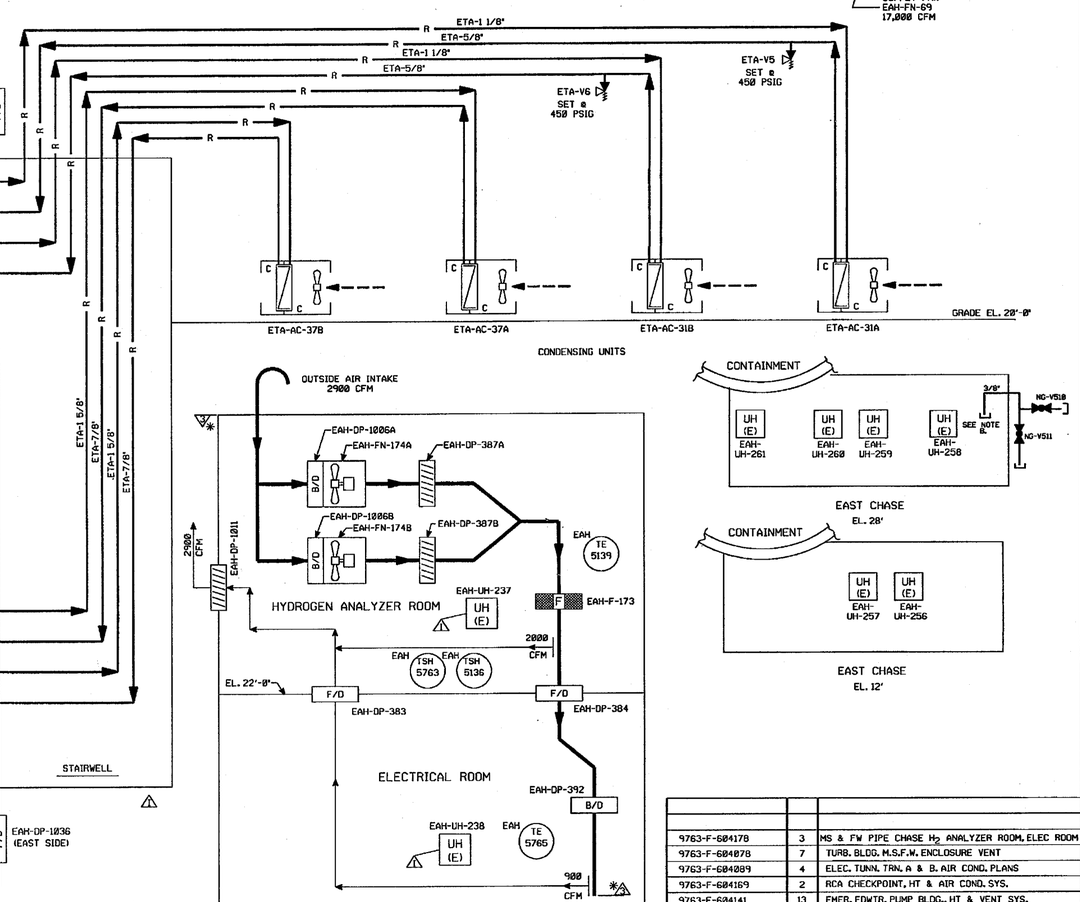

REF. DRAWING NO.	REV	TITLE
9763-F-684178	3	MS & FW PIPE CHASE H_2 ANALYZER ROOM, ELEC ROOM
9763-F-684078	7	TURB. BLDG. M.S.F.W. ENCLOSURE VENT
9763-F-684089	4	ELEC. TUNN. TRN. A & B. AIR COND. PLANS
9763-F-684169	2	RCA CHECKPOINT, HT & AIR COND. SYS.
9763-F-684141	13	EMER. FDWTR. PUMP BLDG., HT & VENT SYS.
9763-F-684148	3	ELECT. TUNN., TRN. A & B. AIR COND. AIR FL. & PID
9763-F-684116	12	PAB & F. STOR. BLDG., VENTIL. SYS., AIR FLOW

FOR P&ID REFERENCE DRAWINGS, SYMBOLS AND ABBREVIATIONS
REFER TO DRAWINGS P&ID - LEGEND 1 AND P&ID - LEGEND 2

NOTES:

1. WORK THIS DRAWING WITH DRAWINGS 20492, 28494 THRU 20502 & 20504 THRU 20508.
2. SYSTEM PREFIXES:
   ETA - ELECTRICAL TUNNEL AIR HANDLING
   EAH - CONTAINMENT ENCLOSURE AIR HANDLING
   CPA - CHECK POINT AIR
   EPA - EMERGENCY FEEDWATER PUMP BUILDING AIR HANDLING.
3. FOR SYMBOL LEGEND, SEE NOTE 3 ON DWG MAH 28494.
4. △ ALL DUCTWORK, UNLESS NOTED.
5. DELETED
6. △ INDICATES REVISION LEVEL
7. THE SYSTEM AIR FLOW RATE HAS BEEN ROUNDED TO 17,000 CFM. REGISTERS HAVE BEEN SET IN THE FULL OPEN POSITION WITH THE SPLITTER DAMPER SET SO THAT 2750 CFM EXITS THE REGISTERS NEAREST THE FANS.
8. ¾" TUBE, PIPE SPEC. 2508, USED FOR NITROGEN BOTTLE CHARGING OF MSIV'S AND FWIV'S

PORTIONS OF THIS DRAWING ARE
NUCLEAR SAFETY RELATED

REV	DATE	DSGN	CHKD	CE	DESCRIPTION
13	9/10/03	JM	BCS	MAP	INCORP MMOD 03-8505 DCN Ø0
12	3/14/02	JM	MPW	BCS	INCORP MSE 01-0319 REV Ø
11	11/14/00	BCS	MPW	MKC	INCORP DCR 00-0003 DCN-00
10	12/6/99	BCS	MPW	JCM	INCORP DCR 98-13 DCN-00
9	6/2/98	DRL	BCS	DWS	INCORP MMOD 97-521 DCN-00
8	3/13/97	BCL	DWS	CWE	INCORP MMOD '94-570 CA0 AND DCR 93-58 CA-01
7	7/14/92	MRB	BCL	IW	INCORP MMOD 90-511 CA0
6	8/16/91	MRB	JM	IW	INCORP. DCR 86-554, CA0
5	9/24/90	MRB	RMC	BCL	INCORP MMOD '90-516 CA0
4	2/2/90	MRB	APL	IW	INCORPORATED DCR 89-48 CA06
3	4/9/87	DAP	LFC	MAC	REVISED REV 2 SIGNOFF DATE ERROR. ADDED TSL 5434 PER LOOP DIAG, INCORP DCR 528. REVISED REF DWG REV.
2	3/13/87	WDS	MRJ	MAC	
1	11/18/86	JDM	MPW	RRC	ADDED NOTES 5 & 6, ADDED REFERENCE DRAWING, ADDED FLOW DIAGRAM DETAIL FOR H_2 ANALYZER RDOM AND ELECTRICAL ROOM PER REVIEW OF UE&C DWG 684178.
Ø	6/12/86	JDM	DWS	WFD	ISSUED FOR OPERATIONS

FPL ENERGY Seabrook Station

MISCELLANEOUS AIR HANDLING DETAILS

PID- 1-MAH-B20503

09/08/03

PID- 1-DAH-B20624

FOR P&ID REFERENCE DRAWINGS, SYMBOLS AND ABBREVIATIONS
REFER TO DRAWINGS P&ID - LEGEND 1 AND P&ID - LEGEND 2

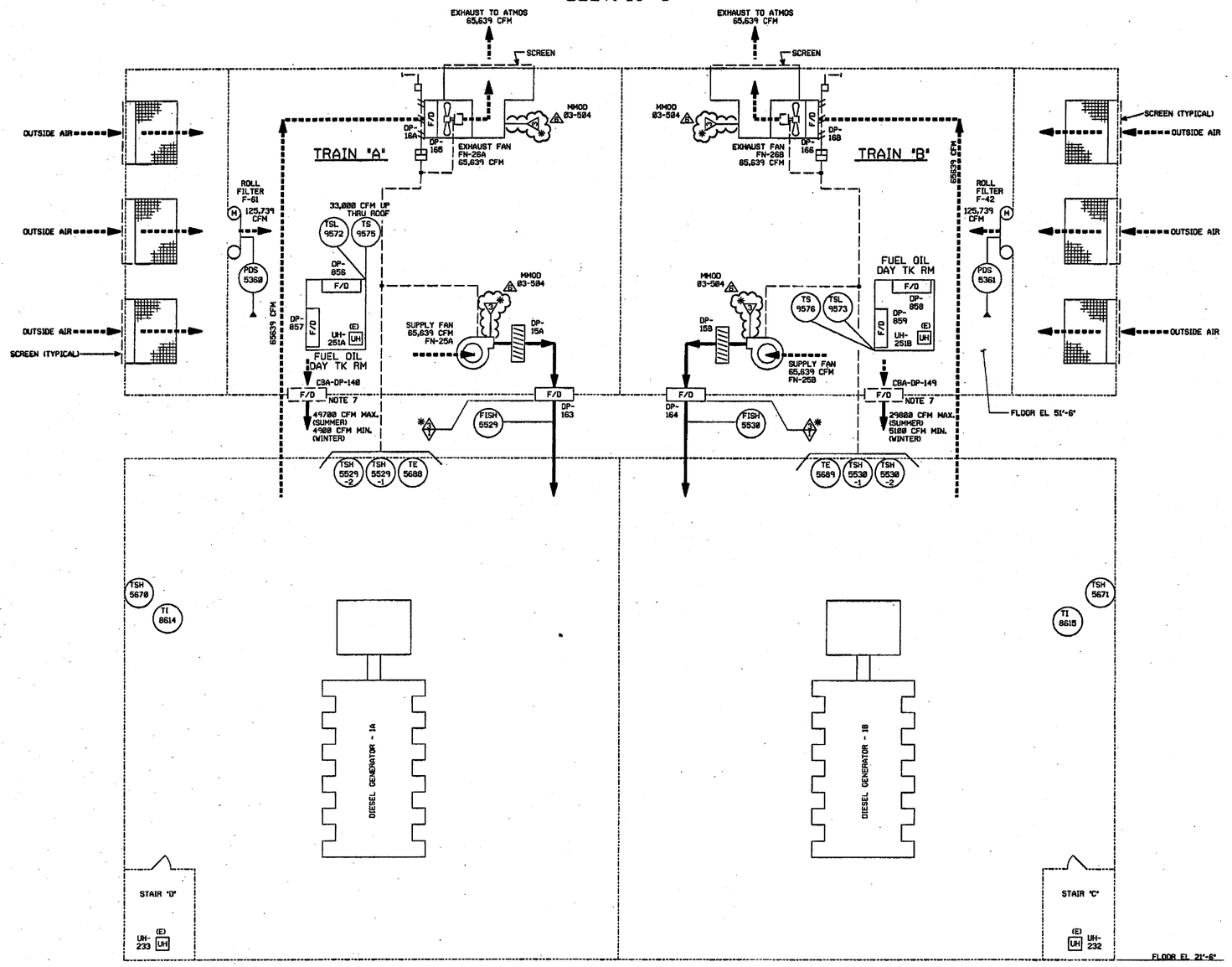

ELEV. 21'-6"

DIESEL GENERATOR BUILDING

NOTES:

1. ALL HVAC, EQUIPMENT, COMPONENTS AND INSTRUMENTS HAVE SYSTEM PREFIX DAH UNLESS NOTED.
2. THE DAH SYSTEM IS A ONE DWG. SYSTEM, AN OVERVIEW IS NOT REQUIRED.
3. ALL HVAC, EQUIPMENT, COMPONENTS AND INSTRUMENTS ARE SAFETY CLASS N UNLESS NOTED.
4. ——— - INDICATES DUCTED SUPPLY AIR
5. — — — - INDICATES DUCTED EXHAUST OR RETURN AIR
6. - - - - - - - - - - - - - - - - - - INDICATES NON DUCTED AIR
7. ADDITIONAL AIR HANDLING FOR DIESEL GENERATOR BLDG. SHOWN ON 1-CBA-B20303.
8. △ INDICATES REVISION LEVEL.

PORTIONS OF THIS DRAWING ARE

NUCLEAR SAFETY RELATED

REV	DATE	DSGN	CHKD	CE	DESCRIPTION
6	11-16-06	JM	BCS	RRB	INCORP MMOD 03-504 DCN 00
5	3/24/00	DWS	BCS	JMS	INCORP DCR 980039 DCN*00 & 20
4	6/12/95	BCL	DSW	DJM	INCORP. MMOD 94-570 CA-0
3	12/1/94	MPW	DWS	JPS	INCORP. DCR 93-44 CA-0
2	12/15/89	MRB	PAL	IW	INCORPORATED DCR 87-405 CA ADDED P & ID LEGEND 1 & 2 NOTE.
1	2/24/87	WDS	PAL	MAC	REVISE REF DWG REVISIONS INCORP DCR 528
0	5-28-86	WES	JDM	WFO	ISSUED FOR OPERATIONS & INCORP. ECA'S 99/1126808 & 99/1144908.

REF. DRAWING NO.	REV	TITLE
9763-F-604091	12	CONTROL BLDG., VENTL. SYS., AIR FLOW DIAG.
9763-F-604096	7	DIESEL GEN BLDG AIR FLOW DIAG

FPL ENERGY Seabrook Station

DIESEL GENERATOR BUILDING AIR HANDLING

PID- 1-DAH-B20624

11/15/06

P10- 1-HW-B20048

NON-ESSENTIAL SWITCHGEAR ROOM 20053

CONTROL BUILDING 20053

TURBINE BUILDING 20053

DIESEL GENERATOR BUILDING 20053

PRIMARY AUXILIARY BUILDING 20051

WASTE PROCESS BUILDING 20050

FUEL STORAGE BUILDING 20056

INCOMPLETE ITEMS

ITEM	NUMBER

NOTES:
1.) WORK THIS DRAWING WITH DRAWINGS 20049 THRU 20056.
2.) ALL LINES, EQUIPMENT, COMPONENTS AND INSTRUMENTS HAVE SYSTEM PREFIX HWS, UNLESS NOTED OTHERWISE.
3.) △ -INDICATES REVISION LEVEL.

REF. DRAWING NO.	REV	TITLE
FP-60776	3	RELIEF VALVES
9763-F-604141	14	EMERG FD. WTR. PUMP BLDG HTG SYS P & ID
FP-60772	4	RELIEF VALVES
9763-F-604103	9	DIESEL GEN & CONTROL BLDG HTG SYS P & ID
9763-F-604117	9	P.A.B. & FUEL STORAGE BLDG HOT WTR HTG P & ID
9763-F-604519	3	W.P.B. SOLIDIFICATION AREA HOT WTR HTG P & ID
9763-F-604514	5	WASTE PROCESS BLDG HOT WTR HTG P & ID

REV	DATE	OSON	DRWN	CHKD	CE	LDE	DESCRIPTION
1	1/26/87	MPW	TAK		BCL		ADDED NOTE 3 AND REVISED PER LATEST SYSTEM DRAWINGS.
0	6/17/86	WES	GJS	DWS	DFM	WFD	ISSUED FOR OPERATIONS

PSNH PUBLIC SERVICE OF NEW HAMPSHIRE

SEABROOK STATION

HOT WATER HEATING SYSTEM OVERVIEW SHEET 1

PID- 1-HW-B20048

PID- 1-HW-B20049

AAH-P-207 AAH-P-208 AAH-P-206 AAH-P-205

AAH-P-211A AAH-P-211B AAH-P-204 AAH-P-214A AAH-P-214B

AAH-P-201 AAH-P-203 AAH-P-202 AAH-P-215A AAH-P-215B

COMPRESSION TANK AAH-TK-149

COMPRESSION TANK AAH-TK-150

HEAT EXCHANGER AAH-E-100B

HEAT EXCHANGER AAH-E-100A

AAH-P-200B AAH-P-200A

AIR SEPARATOR AAH-MM-291

SEAL WATER HEAT EXCHANGER AAH-MM-432

SEAL WATER HEAT EXCHANGER AAH-MM-433

CHEMICAL TANK AAH-MM-293

SAMPLE COOLER AAH-MM-588

20055

ADMINISTRATION & SERVICE BUILDING
20054 & 20055

CIRCULATING WATER PUMP HOUSE
20052

HEAT EXCHANGER E-143

EXPANSION TANK TK-162

MAKE-UP TANK TK-163

P-295

P-294A P-294B

MM-355 AIR SEPARATOR

SERVICE WATER PUMP HOUSE
20052

PERSONNEL HATCH AREA
20056

EXPANSION TANK TK-156

MAKE-UP TANK TK-157

P-280

HEAT EXCHANGER E-132

P-279B P-279A

MM-297 AIR SEPARATOR

EMERGENCY FEEDWATER PUMP BUILDING
20056

CONTAINMENT

PIPE TUNNEL
20056

NOTES:
1. WORK THIS DRAWING WITH DRAWINGS 20048 AND 20050 THRU 20056.
2. ALL LINES, EQUIPMENT, COMPONENTS AND INSTRUMENTS HAVE SYSTEM PREFIX HWS, UNLESS NOTED OTHERWISE.
   HWR - HOT WATER RETURN
3. △ INDICATES REVISION LEVEL.

INCOMPLETE ITEMS

ITEM	NUMBER

REF. DRAWING NO.	REV	TITLE
FP-60776	3	RELIEF VALVE
FP-60772	4	RELIEF VALVE
9763-F-615036	1	ADMIN. & SERV.BLDG.DET. LINE & VALVE SHT. 3
9763-F-615012	9	ADMIN & SERV. BLDG. HVAC SECT & DETAILS
9763-F-584117	9	PAB & FUEL WTR PUMP BLDG. HTG. SYS PID
9763-F-615019	9	ADMIN & SERV BLDG HVAC CONTROL DIA SHT 1 P & ID
9763-F-615033	4	ADMIN & SERV BLDG HVAC CONTROL DIA SHT 4 P & ID
9763-F-615005	5	ADMIN & SERV BLDG HVAC FIRST FLR SHT 5
FP-46559	2	HOT WATER STORAGE HEATER
9763-F-584141	14	EMERG FEED WTR PUMP BLDG HTG SYS P & ID
9763-F-584456	4	SERV & CIRC WTR PUMP HSE HTG SYS P & ID

REV	DATE	DSGN	DRAWN	CHKD	CE	LDE	DESCRIPTION
1	1/21/87	MPW	DPO	WRD	RCL	VWS	ADDED NOTE 3. REVISED PER LATEST SYSTEM DRAWINGS.
0	6/17/86	WES	GJS	DWS	DFM	WFD	ISSUED FOR OPERATIONS

PSNH PUBLIC SERVICE OF NEW HAMPSHIRE

SEABROOK STATION

HOT WATER HEATING SYSTEM OVERVIEW SHEET 2

PID- 1-HW-B20049

4/10/86

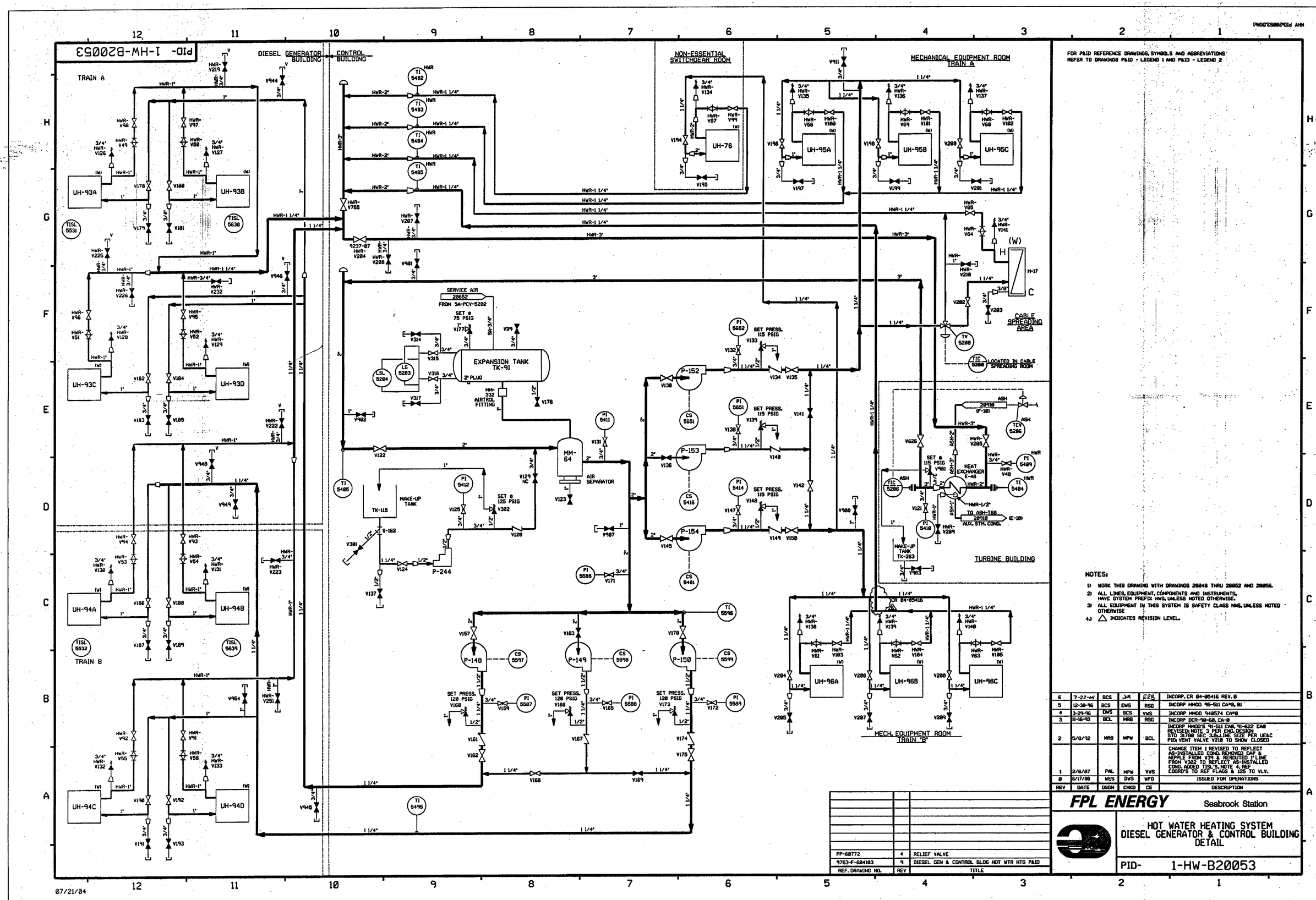

FOR P&ID REFERENCE DRAWINGS, SYMBOLS AND ABBREVIATIONS REFER TO DRAWINGS P&ID - LEGEND 1 AND P&ID - LEGEND 2

NOTES:

1) WORK THIS DRAWING WITH DRAWINGS 20048 THRU 20052 AND 20056.
2) ALL LINES, EQUIPMENT, COMPONENTS AND INSTRUMENTS, HAVE SYSTEM PREFIX HWS, UNLESS NOTED OTHERWISE.
3) ALL EQUIPMENT IN THIS SYSTEM IS SAFETY CLASS NNS, UNLESS NOTED OTHERWISE
4.) △ INDICATES REVISION LEVEL.

REV	DATE	DSGN	CHKD	CE	DESCRIPTION
6	7-22-04	BCS	JM	RRB	INCORP. CR 04-05416 REV. 0
5	12-30-96	BCS	DWS	RSG	INCORP MMOD 95-511 CA#0, 01
4	3-29-96	DWS	BCS	VWS	INCORP MMOD 940574 CA#0
3	11-16-93	BCL	MRB	RSG	INCORP DCR-90-60, CA-0
2	5/8/92	MRB	MPW	BCL	INCORP MMOD'S 91-511 CA0, 91-622 CA0 REVISED: NOTE 3 PER ENG. DESIGN STD 31780 SEC 3.0; LINE SIZE PER UE&C PID; VENT VALVE V210 TO SHOW CLOSED
1	2/6/87	PAL	MPW	VWS	CHANGE ITEM 1 REVISED TO REFLECT AS-INSTALLED COND. REMOVED CAP & NIPPLE FROM V39 & REROUTED 1" LINE FROM V302 TO REFLECT AS-INSTALLED COND. ADDED TISL'S, NOTE 4, REF COORD'S TO REF FLAGS & 125 TO VLV.
0	6/17/86	WES	DWS	WFD	ISSUED FOR OPERATIONS

REF. DRAWING NO.	REV	TITLE
FP-60772	4	RELIEF VALVE
9763-F-604103	9	DIESEL GEN & CONTROL BLDG HOT WTR HTG P&ID

FPL ENERGY Seabrook Station

HOT WATER HEATING SYSTEM
DIESEL GENERATOR & CONTROL BUILDING
DETAIL

PID- 1-HW-B20053

PID- 1-CBA-B20303

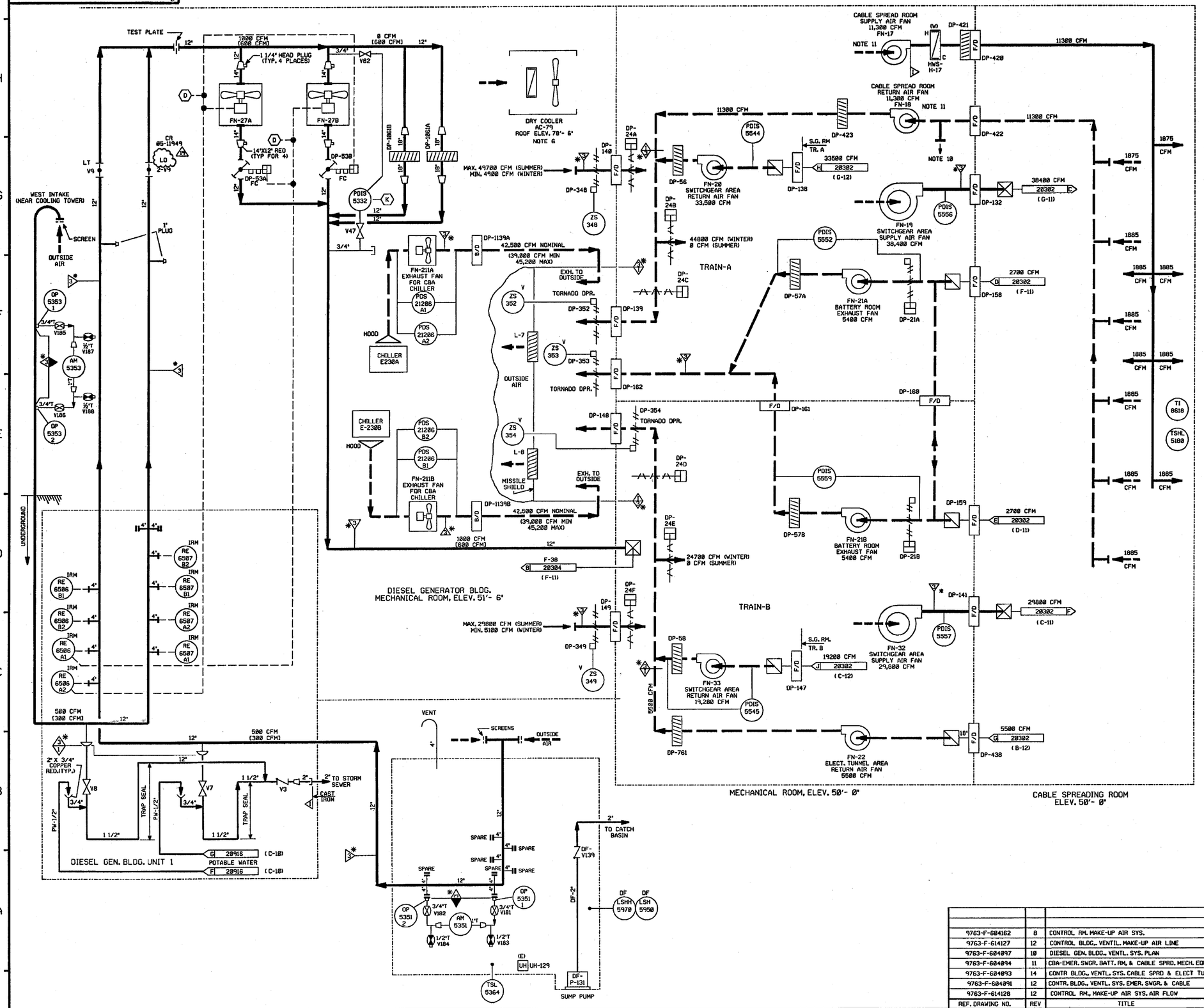

FOR P&ID REFERENCE DRAWINGS, SYMBOLS AND ABBREVIATIONS REFER TO DRAWINGS P&ID - LEGEND 1 AND P&ID - LEGEND 2

NOTES :

1. WORK THIS DRAWING WITH 20300, 20302 & 20304 THRU 20306.
2. ALL HVAC, EQUIP. & INSTRUMENTS HAVE SYSTEM PREFIX CBA, UNLESS NOTED.
3. FOR SYMBOL LEGEND SEE DRAWING 20302.
4. INSTRUMENT REFERENCES :
   - (A) INTERLOCK WITH 2-CBA-FN-27A & 2-CBA-DP-538
   - (B) INTERLOCK WITH 2-CBA-FN-27B & 2-CBA-DP-53A
   - (D) INTERLOCK WITH FILTER RECIRC. SIGNAL LOGIC DIA 583231
   - (K) TO DP-28 ON DWG 20304
5. DELETED
6. REFRIGERANT PIPING SHOWN ON DWG. 20306.
7. DELETED
8. DELETED
9. △ INDICATES REVISION LEVEL.
10. OPENING TO PROVIDE OVER-PRESSURE PROTECTION FOR CABLE SPREADING ROOM WITH FAN OFF. OPENING IS NORMALLY COVERED WITH FAN ON.
11. FAN IN PERMANENT STAND-BY STATUS.

PORTIONS OF THIS DRAWING ARE

NUCLEAR SAFETY RELATED

REV	DATE	DSGN	CHKD	CE	DESCRIPTION
19	12/22/05	BCS	JM	MCP	INCORP. CR 05-11949 REV. 00
18	4/27/05	JM	BCS	DJM	INCORP. DCR 05-009 DCN 00 & 01
17	12/06/02	JM	BCS	RCP	INCORP. DCR 97-38 DCN-00 & 01
16	11/22/02	BCS	MPW	RCP	PARTIAL INCORP. DCR 97-38 DCN-00
15	3-24-00	DWS	BCS	JMS	INCORP DCR 980039 DCN*00, 20 & 63
14	2/22/00	BCS	DWS	MPW	PARTIAL INCORP DCR 980039 DCN*63
13	2/11/00	DWS	BCS	MPW	PARTIAL INCORP DCR 980039 DCN*00 & 20
12	1/5/99	BCS	MPW	RWM	INCORP. MMOD 98-533 CA-0
11	9/01/98	BCS	DWS	CG	INCORP. MMOD 96-623 DCN 00
10	6/30/97	MPW	DWS	RCP	INCORP. MMOD 97-568 DCN 00
9	6/12/96	BCL	DWS	DJM	INCORP. MMOD 94-570 CA-0
8	10/2/92	MRB	BCL	BAW	INCORP. DCR 89-14 CA0
7	4/2/92	MRB	BCL	JEV	INCORP. MMOD 91-515 CA02
6	8/31/91	GPM	JM	MAC	INCORP. DCR 89-00 CA07
5	2/8/91	MRB	JM	DJM	INCORP ECA 85/2293C
4	9/29/89	MRB	APL	JWS	INCORP. DCR 86-203 CA21 ADDED SYS PREFIXES PER NOTE 2 DELETED INSTR. TAG NO PER SIS VERIFICATION
3	4/5/89	GPM	PAL	MAC	INCORPORATED DCR 89-7
2	2/24/87	JDM	PAL	MAC	ADDED INSTRUMENTATION & NOTE 9, CORRECTED LINE TO INSTR. 5351, RELOCATED 3/4" PLUG PER ERECTION ISO. ADDED P&ID LEGEND NOTE, UPDATED REF DWG REV'S, INCORP ECA 98/118373A, ADDED CONTINUATION DWG. COORDINATES INCORP DCR 528, DELETED NOTE 5
1	6/26/86	BCL	DNK	RRC	INCORP ECA 99/1150288 ADDED POTABLE WATER CONT. & FLOW RATES FOR AC-4A & B
0	3/4/86	DWS	WES	WFD	ISSUED FOR OPERATIONS

REF. DRAWING NO.	REV	TITLE
9763-F-604162	8	CONTROL RM. MAKE-UP AIR SYS.
9763-F-614127	12	CONTROL BLDG., VENTIL. MAKE-UP AIR LINE
9763-F-604097	10	DIESEL GEN. BLDG., VENTL. SYS. PLAN
9763-F-604094	11	CBA-EMER. SWGR. BATT. RM. & CABLE SPRD. MECH. EQUIP
9763-F-604093	14	CONTR BLDG., VENTL. SYS. CABLE SPRD & ELECT TUNN
9763-F-604091	12	CONTR. BLDG., VENTL. SYS. EMER. SWGR. & CABLE
9763-F-614128	12	CONTROL RM., MAKE-UP AIR SYS. AIR FLOW

FPL ENERGY Seabrook Station

CONTROL BUILDING AIR HANDLING DETAIL

PID- 1-CBA-B20303

12/21/05

PID- 1-CBA-B20302

FOR P&ID REFERENCE DRAWINGS, SYMBOLS AND ABBREVIATIONS REFER TO DRAWINGS P&ID - LEGEND 1 AND P&ID - LEGEND 2

NOTES:

1.) WORK THIS DRAWING WITH DRAWINGS B20300 & 320[illegible] THRU B20[illegible].

2.) ALL HVAC EQUIPMENT & INSTRUMENTS HAVE SYSTEM PREFIX CBA, UNLESS NOTED OTHERWISE.

3.) SYMBOL LEGEND

- XXX CFM — NORMAL AIR FLOW
- [XXX CFM] — EMERGENCY AIR FLOW
- PARALLEL MULTIBLADE DAMPER W/LIMIT SWITCH
- OPPOSED MULTIBLADE DAMPER W/LIMIT SWITCH
- BACKDRAFT DAMPER
- X/D — DAMPER F-FIRE B-BALANCING
- FIXED LOUVER
- COOLING COIL
- FILTER F-ROUGHING, PRE-FILTER A-HEPA C-CHARCOAL
- ELECTRIC HEATING COIL
- HEATING COIL W-WATER S-STEAM
- UNIT HEATER W-WATER S-STEAM E-ELECTRIC
- HUMIDIFIER W-WATER
- DUCTED SUPPLY
- DUCTED RETURN
- NON-DUCTED SUPPLY OR RETURN

PORTIONS OF THIS DRAWING ARE

NUCLEAR SAFETY RELATED

REV	DATE	DSGN	DRAWN	CHKD	CDE	SES	DESCRIPTION
4	1/8/99	BCS	—	DWS	JPS	[illegible]	INCORP. MMOD 96-641 DCN-00
3	6/12/98	BCL	—	DWS	MPW	DJM	INCORP. MMOD 94-570 CA-3
2	2-5-90	MRB	LFC	APL	WCL	IW	INCORP. DCR 86-572CA02, ADDED LEGEND NOTE
1	2-24-87	WDS	DWS	PAL	BCL	MAC	REVISED REF DWG REVISIONS INCORP DCR 528
0	3-4-86	DWS	GJS	WES	JKW	WFD	ISSUED FOR OPERATIONS

REF. DRAWING NO.	REV	TITLE
9763-F-604095	13	CBA EMERG. SWGR. & BATT. ROOMS PLAN
9763-F-604091	12	CONTROL BLDG. VENT. SYS. AIR FLOW DIAG.

North Atlantic Energy Service Corporation

SEABROOK STATION

CONTROL BUILDING AIR HANDLING EMERGENCY SWITCHGEAR AREA DETAIL

PID- 1-CBA-B20302

01/07/99

PID- 1-AAH-B20001

1-AAH-20002

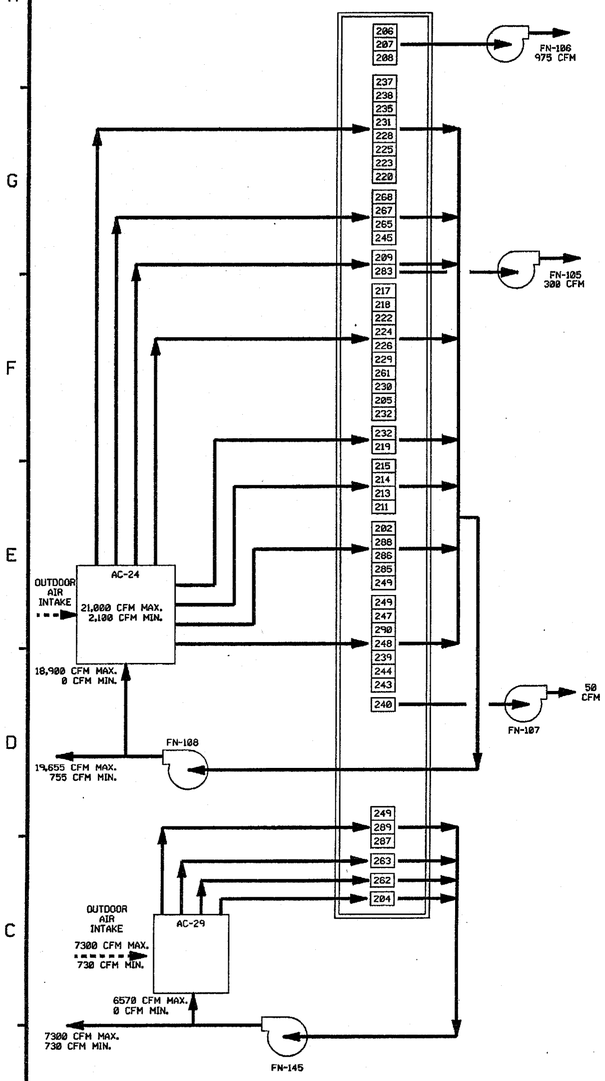

1-AAH-20004

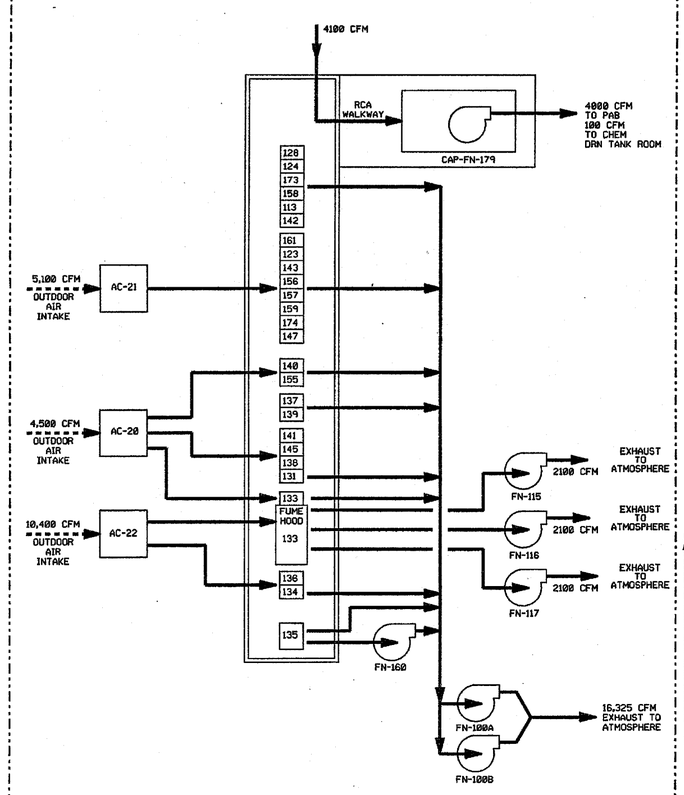

FIRST FLOOR - RADIATION CONTROL AREA

1-AAH-20003

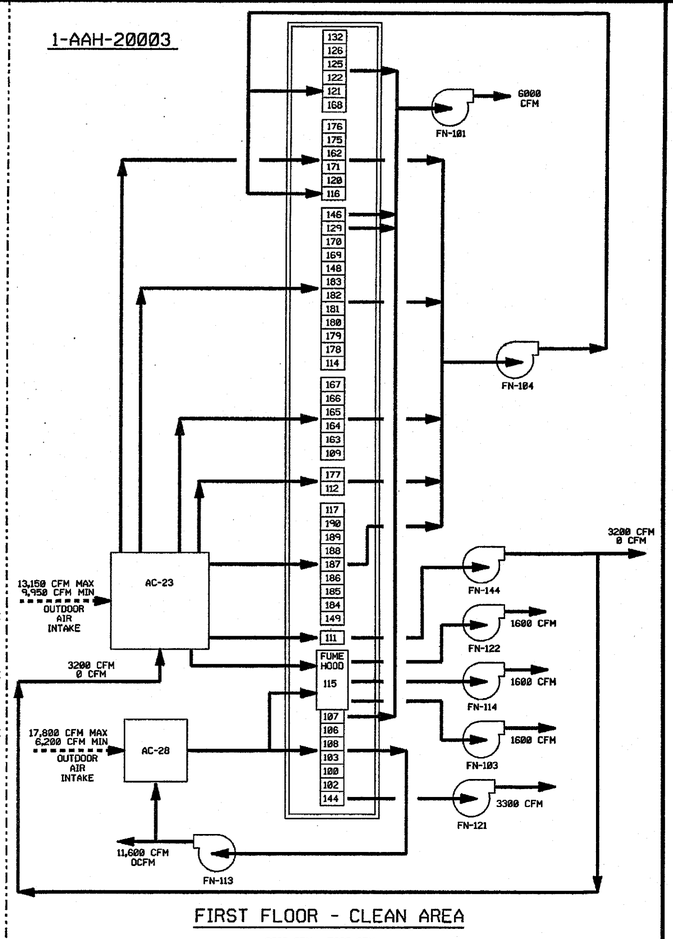

FIRST FLOOR - CLEAN AREA

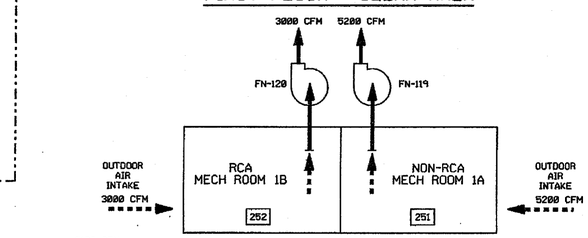

MECHANICAL ROOMS

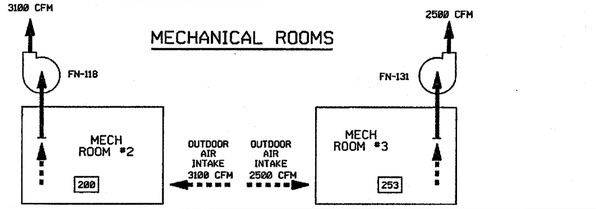

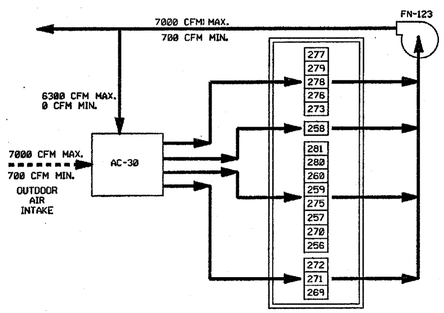

SECOND FLOOR - ADMINISTRATIVE AREA

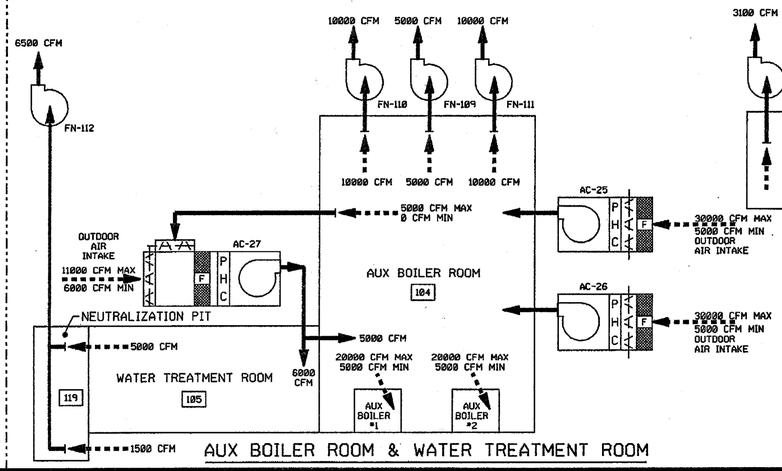

AUX BOILER ROOM & WATER TREATMENT ROOM

FOR P&ID REFERENCE DRAWINGS, SYMBOLS AND ABBREVIATIONS REFER TO DRAWINGS P&ID - LEGEND 1 AND P&ID - LEGEND 2

NOTES:
1. WORK THIS DRAWING WITH DRAWINGS 20002, 20003, AND 20004
2. ALL EQUIPMENT AND INSTRUMENTATION HAS SYSTEM PREFIX AAH, EXCEPT AS NOTED.
3. ——— INDICATES DUCTED FLOW, – – – INDICATES NON-DUCTED FLOW
4. MECHANICAL ROOMS, AUX. BOILER ROOM, AND WATER TREATMENT ROOM ARE DETAILED ON DRAWING 20003
5. [XXX] DENOTES ROOM NUMBER
6. △ INDICATES REVISION LEVEL

REV	DATE	DSGN	CHKD	SES	DESCRIPTION
4	1/7/03	MPW	JM	SC	REVISED ENTIRE DWG PER MMOD 01-572 DCN 00
3	7/25/91	MRB	JM	JW	INCORP. ECA 39/2828 & MMOD 91-511 CA 00
2	1/21/87	WDS	WRD	VWS	DELETED "B" FROM DWG NUMBER IN NOTES 1 AND 4. REVISED PER LATEST SYSTEM DRAWINGS
1	6/19/86	WAL	JDM	WFD	INCORP. ECA 86/0080A. ISSUED FOR OPERATIONS
0	2/15/84	GHF	RSL	WFD	AS-BUILT

REF. DRAWING NO.	REV	TITLE

FPL ENERGY Seabrook Station

ADMINISTRATION & SERVICE BLDG
HVAC AIR FLOW
OVERVIEW

PID- 1-AAH-B20001

01/07/02

PID- 1-CWA-B20240

EXAUST TO ATMOSHPERE

BACKDRAFT DAMPER

FN-3?C

FN-3?B

FN-3?A

EXHAUST FANS
70000 CFM EACH
(TYP. FOR 3)

ASH TSL 5471

(S) UH ASH-UH-185

(S) UH ASH-UH-184

(S) UH ASH-UH-183

TSH 5578

CIRCULATING WATER PUMPS UNIT ONE

TSH 5577

CIRCULATING WATER PUMPS UNIT TWO

TSH 5576

ASH TSL 5496 (S) UH ASH-UH-182

ASH TSL 5493 (S) UH ASH-UH-184

EXHAUST FAN CWA-FN-284

2775 CFM

2775 CFM CWA-L-?B LOUVER

WASTE HANDLING AREA

CWPH TSHL 5575

HIGH & LOW TEMP. ALARM

ASH TSL 5492

(S) UH ASH-UH-186

(S) UH ASH-UH-187

(S) UH ASH-UH-188

L-4C

L-4B

L-4A

INTAKE LOUVERS
70000 CFM EACH
(TYP. FOR 3)

INTAKE TRANSITION STRUCTURE

DISCHARGE TRANSITION STRUCTURE

(E) UH UH-262

(E) UH UH-263

DCR 92-49

NOTES :
1. CWA IS A ONE DRAWING SYSTEM
2. ALL HVAC, EQUIPMENT & INSTRUMENTS HAVE SYSTEM PREFIX CWA, UNLESS NOTED. ASH - AUX. STEAM HEATING.
3. ALL INSTRUMENTS AND EQUIPMENT ARE SAFETY CLASS N UNLESS OTHERWISE NOTED.

REF. DRAWING NO.	REV	TITLE
9763-F-684456	3	SERV. & CIRC. WTR. P. H. HT. SYS., PID
9763-F-684453	4	SERV. & CIRC. WTR. P. H. VENTL. SYS., AIR FLOW

REV	DATE	DSGN	DRWN	CHKD	CDE	SES	DESCRIPTION
3	9/16/97	BCS	—	MPW	MRB	JCH	INCORP DCR 92-49 CA-B2
2	2-5-97	DWS	—	MPW	MRB	JCH	INCORP DCR 95881 CA#8
1	5-11-92	MRB	—	BCL	DWS	GPM	INCORP MMOD 91-622 CA8
0	2/25/86	DWS	DSB	TAK		WFD	ISSUED FOR OPERATIONS

North Atlantic Energy Service Corporation

SEABROOK STATION

CIRCULATING WATER PUMPHOUSE AIR HANDLING

PID- 1-CWA-B20240

09/01/97

PID- 1-SWA-B20372

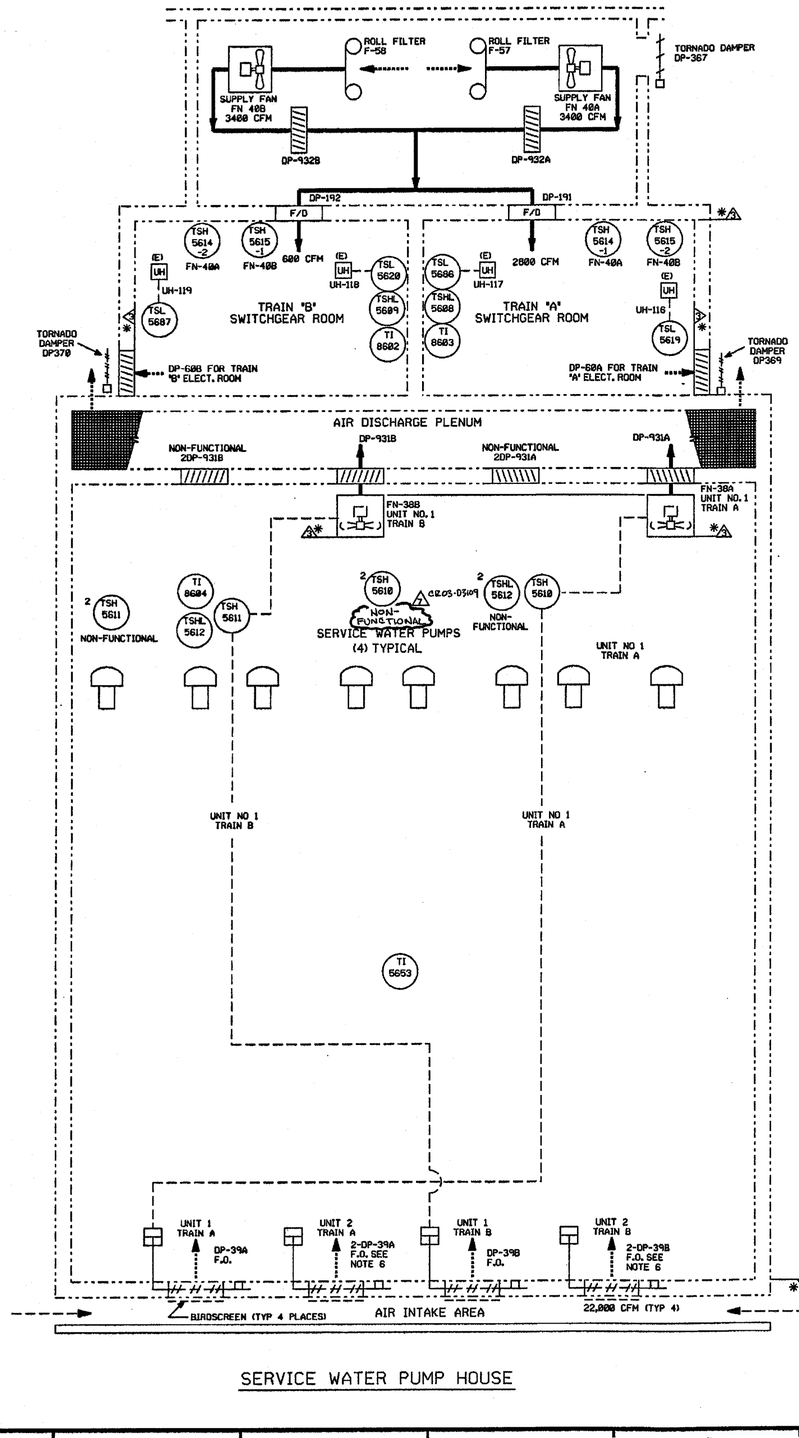

SERVICE WATER PUMP HOUSE

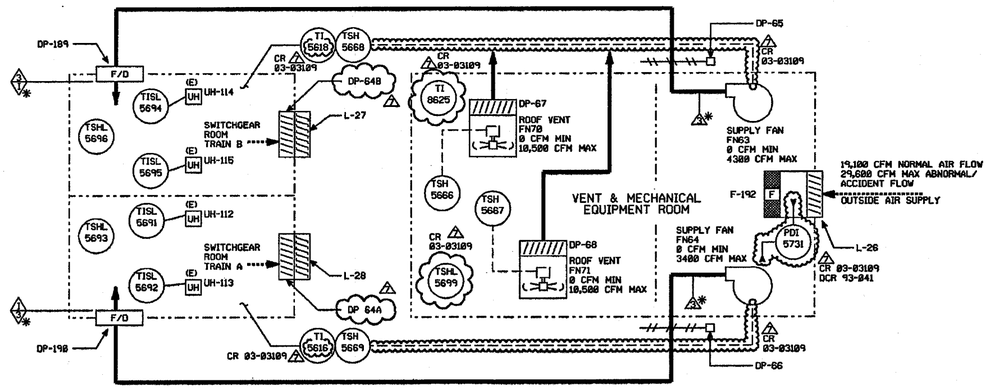

SERVICE WATER COOLING TOWER

FOR P&ID REFERENCE DRAWINGS, SYMBOLS AND ABBREVIATIONS REFER TO DRAWINGS P&ID - LEGEND 1 AND P&ID - LEGEND 2

NOTES:

1. ALL EQUIPMENT, COMPONENTS, & INSTRUMENTS HAVE SYSTEM PREFIX SWA UNLESS OTHERWISE NOTED.
2. THE SWA SYSTEM IS A ONE (1) DRAWING SYSTEM, AN OVERVIEW IS NOT REQUIRED.
3. △1 ALL DUCTWORK, UNLESS NOTED.
4. ALL EQUIPMENT, COMPONENTS, & INSTRUMENTS ARE SAFETY CLASS NNS UNLESS OTHERWISE NOTED.
5. △ INDICATES REVISION LEVEL.
6. THIS UNIT 2 EQUIPMENT IS NEEDED FOR UNIT 1 OPERATION.

PORTIONS OF THIS DRAWING ARE

NUCLEAR SAFETY RELATED

REV	DATE	DSGN	CHKD	CE	DESCRIPTION
7	5/19/03	JM	BCS	MPW	INCORP. CR 03-03109 REV. 00 RE-INCORP. DCR 93-041 CA 01 & REVISED DAMPER ID's
6	6/14/95	BCL	MPW	VWS	INCORP. MMOD 94-570 CA0
5	12/9/94	BCL	MPW	VWS	INCORP. MMOD 94-501 CA0
4	3/31/93	MRB	BCL	JCM	INCORP. MMOD 92-553 CA0
3	9/24/90	MRB	JM	BCL	INCORP. MMOD 90-516 CA 0 REVISED NOTE 4 PER ENGINEERING DESIGN STANDARD 37180 SECT. 3.0 ADDED LEGEND NOTE
2	8/2/88	MPW	PAL	MAC	REVERSED TI NO'S PER M-506844 REV 4 & INCORP ECA 99/108182A
1	2/24/87	WDS	PAL	MAC	INCORP DCR 528, ADDED TI-5653 PER M-506841.
0	4-24-86	JS	JDM	WFD	ISSUED FOR OPERATIONS

REF. DRAWING NO.	REV	TITLE
9763-F-604139	13	COOLING TOWER VENTILATION & DRAINAGE
9763-F-604453	5	SERV & CIRC. WATER PUMPHOUSE HVAC DIAG.

FPL ENERGY Seabrook Station

AIR HANDLING SYSTEM FOR SERVICE WATER PUMPHOUSE AND SERVICE WATER COOLING TOWER

PID- 1-SWA-B20372

05/07/03

PID- 1-TAH-B20170

FOR P&ID REFERENCE DRAWINGS, SYMBOLS AND ABBREVIATIONS REFER TO DRAWINGS P&ID - LEGEND 1 AND P&ID - LEGEND 2

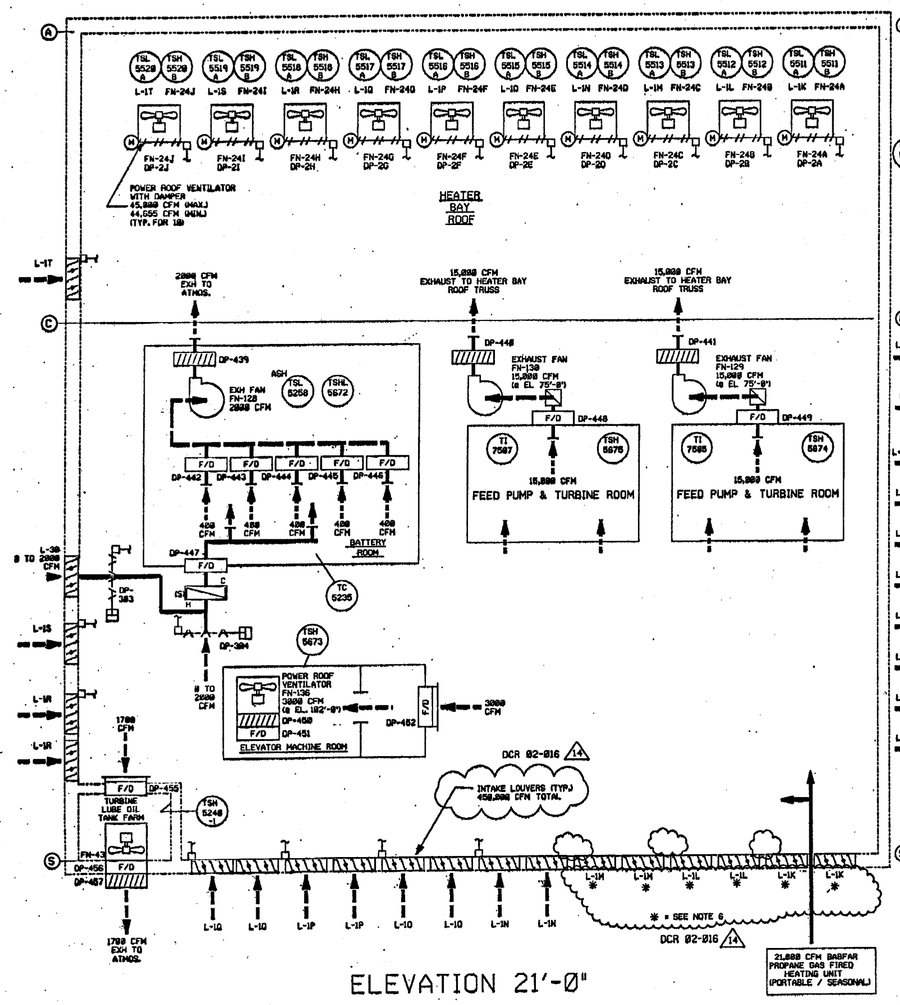

NOTES:

1. ALL LINES, EQUIPMENT, COMPONENTS AND INSTRUMENTS HAVE SYSTEM PREFIX TAH UNLESS NOTED.
2. WORK THIS DWG. WITH DWG'S. 28171 AND 28172.
3. ALL LINES, EQUIPMENT, COMPONENTS AND INSTRUMENTS ARE SAFETY CLASS NNS UNLESS NOTED.
4. LEGEND:
   - DUCTED SUPPLY
   - DUCTED RETURN
   - NON DUCTED SUPPLY OR RETURN
   - S — SUCTION PIPING
   - L — LIQUID PIPING
5. △14 INDICATES REVISION LEVEL.
6. INTAKE LOUVERS L-1K, 1L AND 1M ARE BLANKED OFF AND NON-FUNCTIONAL.

DCR 02-016 △14

REV	DATE	DSGN	CHKD	CE	DESCRIPTION
14	4-8-05	BCS	JM	pcs	INCORP DCR 02-16 DCN-12
13	11/29/94	BCS	JM	RRB	INCORP MSE 94-155 REV 00
12	10/5/94	BCS	JM	RRB	INCORP ECA 86/082135J & CR 00-03688 REV 00
11	2/13/03	BCS	JM	TWG	INCORP DCR 00-009 DCN-03
10	2/13/03	BCS	MPW	JM	INCORP MSE 02-000 REV 00
9	7/28/00	MPW	JM	MRB	INCORP MSE 00-0042 DCN 00
8	6/15/00	BCS	MPW	JCM	INCORP DCR-98-841 DCN-00
7	12/6/99	BCS	MPW	JCM	PARTIAL INCORP DCR-98-841 DCN-00
6	10/23/95	BCL	MPW	GRM	INCORP DCR-94-827 CA0
5	7/17/92	MRB	DWS	IV	INCORP MHDD 92-532, CA0
4	10/12/90	MRB	RMC	ES	INCORP DCR 87-138 CA0 REV. NOTE 3 PER NHY ENG DESIGN STD 37188 SECT. 3.0
3	11/22/89	MRB	PAL	BEB	INCORP. DCR 86-518 CA DELETED VALVE TAG PREFIX
2	4/5/89	GPM	PAL	DEK	INCORPORATED DCR 86-552, CA02
1	2/24/87	PAL	MPW	MAC	CORRECTED DRAFTING ERROR, ADDED NOTE 5 & REF. DRAWING NOTE.
0	4/23/86	JH	DWS	WFD	ISSUED FOR OPERATIONS

REF. DRAWING NO.	REV	TITLE
9763-F-684164	11	TURBINE BLDG AIR & BATTERY RM VENT
9763-F-684083	1	TURBINE BLDG VENT SYS EL 46'-0" & 50'-0"
9763-F-684082	2	TURBINE BLDG VENT SYS PLAN EL 21'-0"
9763-F-684081	8	TURBINE BLDG VENT SYS-ROOF PLAN
9763-F-684078	7	TURBINE BLDG FD PMP & TURB RM MSFW VENT

FPL ENERGY Seabrook Station

TURBINE BUILDING AIR HANDLING DETAIL

PID- 1-TAH-B20170

04/14/05

PID- 1-TAH-B20171

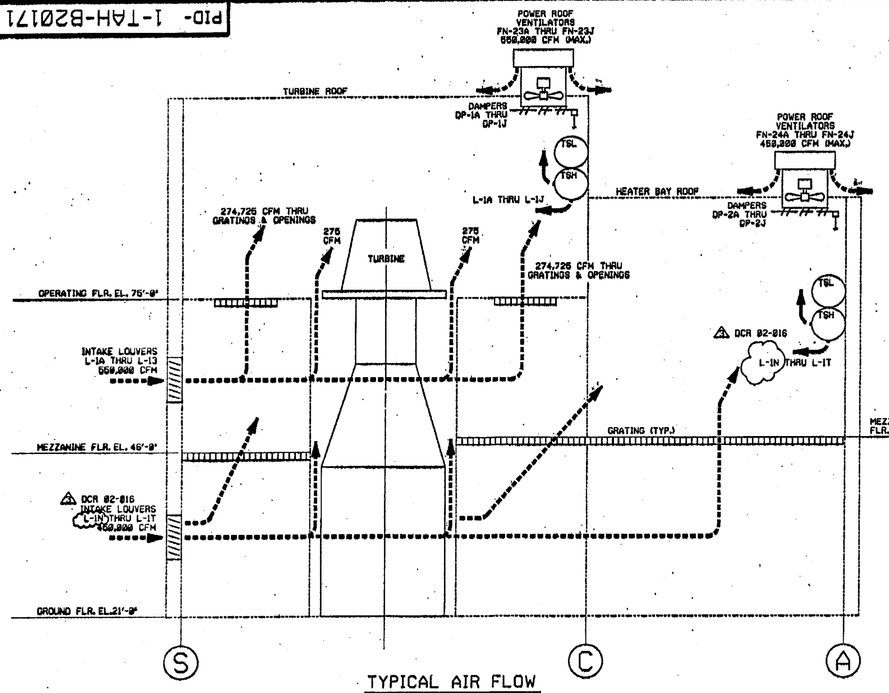

TYPICAL AIR FLOW

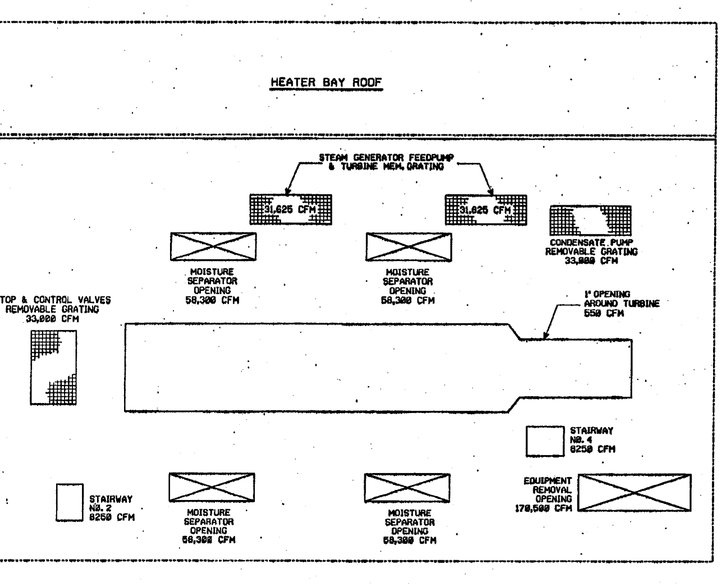

AIR FLOW PATTERN THRU OPERATING FLOOR EL. 75'-0"

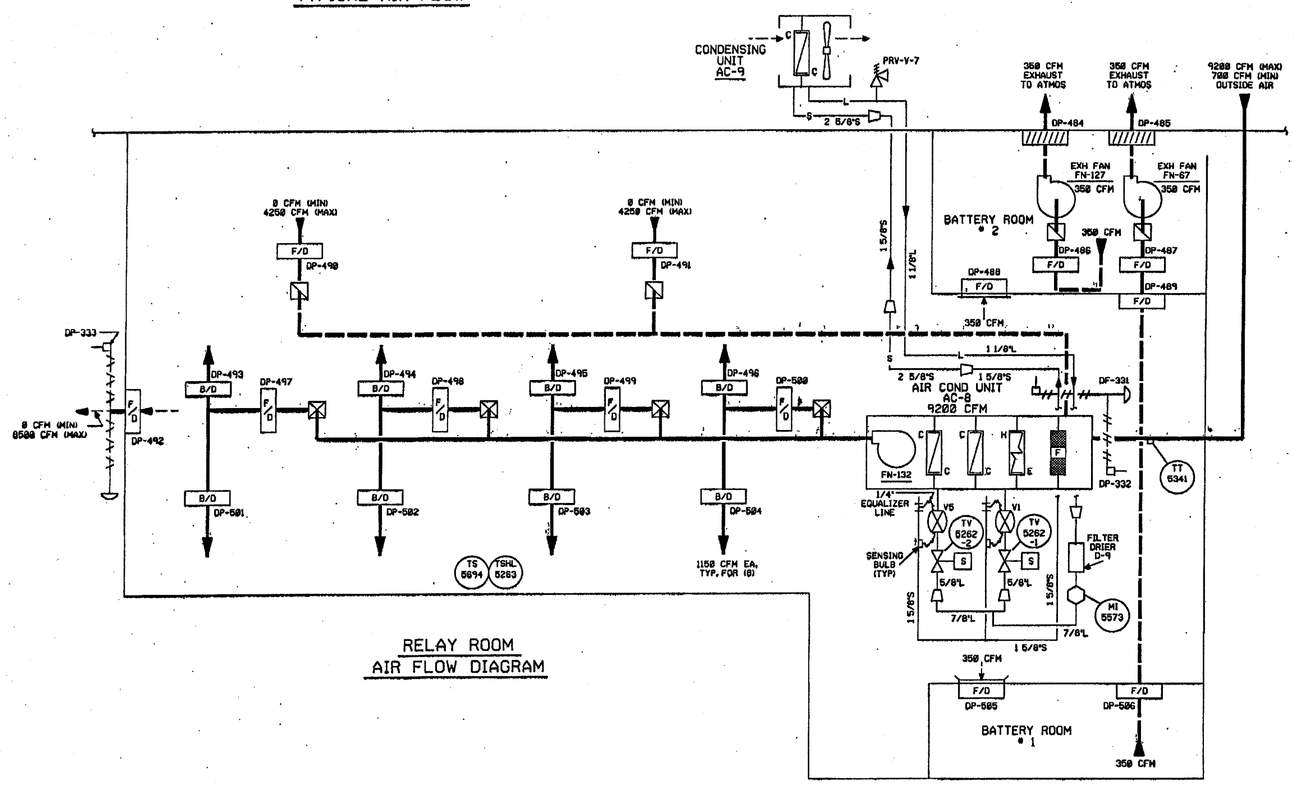

RELAY ROOM AIR FLOW DIAGRAM

REF. DRAWING NO.	REV	TITLE
9763-F-614084	9	TURB BLDG RELAY RM AC SYS PLANS & SECT'S
9763-F-684164	11	BATT. RM. ELEV. MACH. RM. & AC EL 75'-8"
9763-F-684083	1	TURB. BLDG. PLAN EL. 46'-9" & 59'-8"
9763-F-684082	2	TURB. BLDG. PLAN EL. 21'-8"
9763-F-684081	8	TURB. BLDG. ROOF PLAN
9763-F-684078	6	FEED PUMP & TURB. ROOM PLAN

FOR P&ID REFERENCE DRAWINGS, SYMBOLS AND ABBREVIATIONS REFER TO DRAWINGS P&ID - LEGEND 1 AND P&ID - LEGEND 2

NOTES:

1. WORK THIS DWG. WITH DWG'S. 20170 AND 20172.
2. ALL HVAC, EQUIPMENT, COMPONENTS AND INSTRUMENTS HAVE SYSTEM PREFIX TAH (TURBINE AIR HANDLING) UNLESS NOTED.

REV	DATE	DSGN	CHKD	CE	DESCRIPTION
3	9/19/05	BCS	JH	AGZ	INCORP. DCR 92-816 DCN-12
2	7/17/92	MRB	DWS	ICW	INCORP. MMOD 92-632 CAR
1	1/22/91	MRB	JH	DJM	REVISED PER UE&C P&ID 9763-F-614084 ADDED P&ID LEGEND NOTE
0	4/23/86	JH	DWS	WFD	ISSUED FOR OPERATIONS

FPL ENERGY Seabrook Station

TURBINE BUILDING AIR HANDLING DETAIL

PID- 1-TAH-B20171

04/17/05

PID- 1-TAH-B20172

FOR P&ID REFERENCE DRAWINGS, SYMBOLS AND ABBREVIATIONS REFER TO DRAWINGS P&ID - LEGEND 1 AND P&ID - LEGEND 2

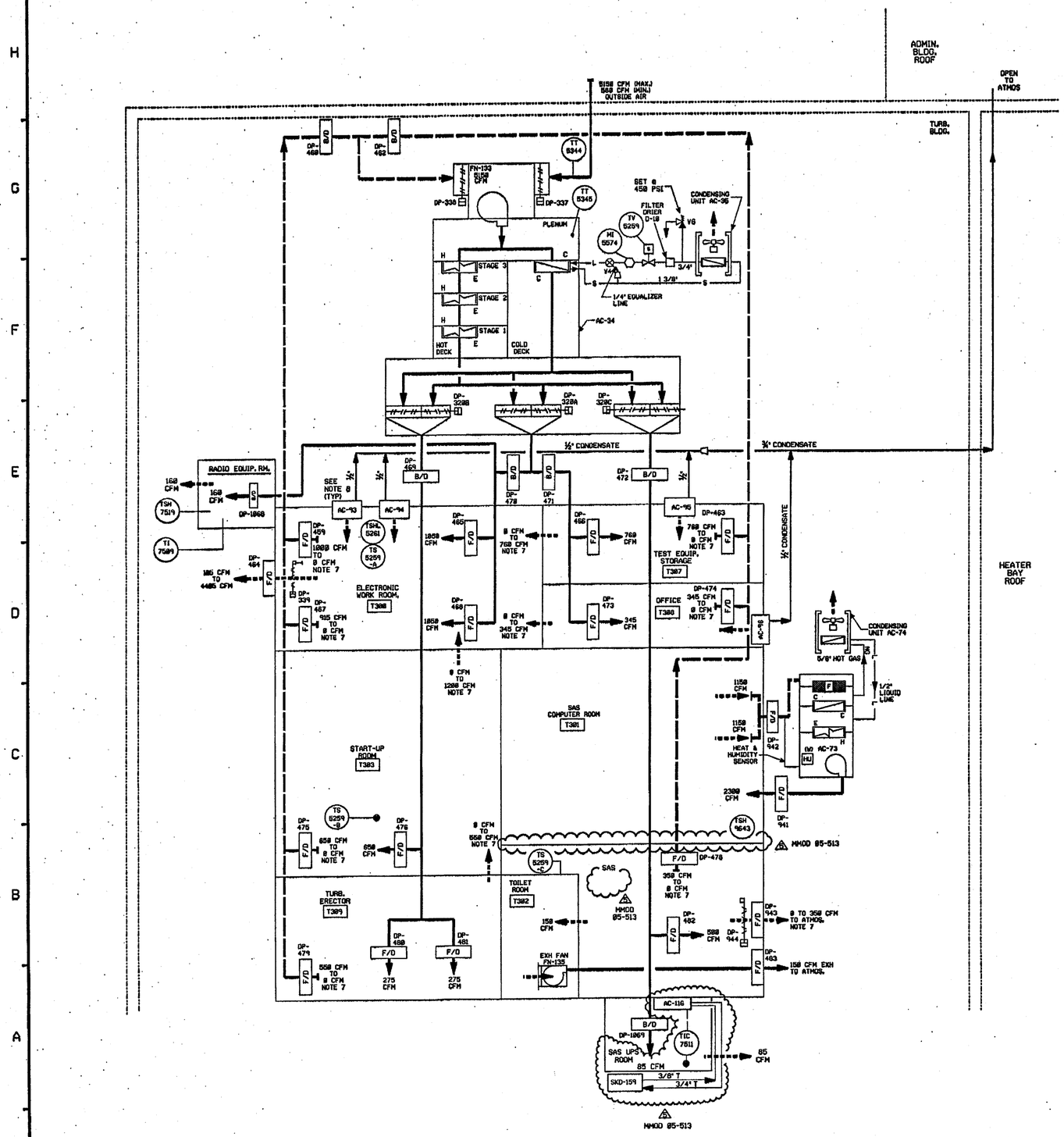

NOTES:

1. ALL LINES, EQUIPMENT, COMPONENTS AND INSTRUMENTS HAVE SYSTEM PREFIX TAH UNLESS NOTED OTHERWISE.
2. WORK THIS DWG. WITH DWG. 28178 AND 28171
3. ALL LINES, EQUIPMENT, COMPONENTS AND INSTRUMENTS ARE SAFETY CLASS NNS UNLESS NOTED OTHERWISE.
4. LEGEND:
   - DUCTED SUPPLY
   - DUCTED RETURN
   - NON DUCTED SUPPLY OR RETURN
   - S — SUCTION PIPING
   - L — LIQUID PIPING
5. △ INDICATES REVISION LEVEL.
6. ▭ INDICATES ROOM NUMBER.
7. FLOWS INCREASE OR DECREASE WITHIN THE LIMITS NOTED IN PROPORTION TO THE AMOUNT OF OUTSIDE AIR PROVIDED THROUGH MODULATING DAMPER 1-TAH-DP-337.
8. A/C UNITS NO. 93,94,95 & 96 ARE BACK UP UNITS TO MAIN A/C UNIT NO. 34 AND NORMALLY DO NOT OPERATE. ROOM OCCUPANTS MAY ADJUST AIR FLOW AS REQUIRED.

REV	DATE	DSGN	CHKD	CE	DESCRIPTION
5	12/13/05	JM	BCS	JC	INCORP MMOD 05-513 DCN 00
4	2/5/04	BCS	JM	TWG	INCORP DCR 00009 REV. 03
3	5/7/99	DWS	BCS	HWM	INCORP MMOD 970618 DCN*00
2	12/19/95	MPW	HWM	CWL	INCORP MMOD 95-550, CA0
1	5/26/93	MRB	BCL	MPW	INCORP DCR 92-26, CA0
0	7/14/92	MPW	MRB	BCL	ISSUED FOR OPERATIONS

REF. DRAWING NO.	REV	TITLE
9763-F-684164	11	TURBINE BLDG AIR & BATTERY RM VENT

FPL ENERGY Seabrook Station

TURBINE BUILDING AIR HANDLING DETAIL

PID- 1-TAH-B20172

12/12/05

PID- 1-CBA-B20309

ADMINISTRATION BUILDING

NON ESSENTIAL SWITCHGEAR BUILDING ROOF

CONTROL BUILDING

MECH ROOM 1B

FAN COIL UNIT AC-3B

20308

E-229B

COIL DRAIN

FAN COIL UNIT AC-3A

20307

E-229A

AUTOMATIC AIR RELEASE VALVE V489

AIR SEPARATOR 1-CBA-TK-294

TEMP. COOLING CONN.

GLYCOL MAKEUP MANUAL

CBA DM

DM-V858

20355

1-CBA-TK-293 EXPANSION TANK PRE-CHARGE @ 12 PSIG

SET @ 60 PSIG

CHILLED WATER PUMP P-433

CHILLED WATER PUMP P-432

1/2" PLUG

CHILLER E-227

CHILLER E-226

SET @ 110 PSIG

GLYCOL SOLUTION DRAIN

CONTROL ROOM

CONTROL BUILDING

NON ESSENTIAL SWITCHGEAR BUILDING ROOF

ADMINISTRATION BUILDING ROOF

FOR P&ID REFERENCE DRAWINGS, SYMBOLS AND ABBREVIATIONS REFER TO DRAWINGS P&ID - LEGEND 1 AND P&ID - LEGEND 2

NOTES:

1. WORK THIS DWG WITH DWGS 20300 & 20302 THRU 20308.
2. ALL EQUIPMENT, COMPONENTS & INSTRUMENTS HAVE SYSTEM PREFIX CBA UNLESS NOTED.
3. ALL EQUIPMENT, COMPONENTS & INSTRUMENTS ARE NNS UNLESS NOTED.
4. CLEANLINESS CLASS 'C'.
5. INTEGRITY TEST BOUNDARY INCLUDES ALL PIPING AND EQUIPMENT INCLUDING CHILLERS, PUMPS, TANKS AND COOLING COILS.
6. △ INDICATES REVISION LEVEL.
7. SYSTEM DESCRIPTION NUMBER IS SD-41.
8. ALL PIPING IS PIPE CLASS M3.
9. ALL INSTRUMENT TAG NOS. HAVE PREFIX 21 UNLESS OTHERWISE NOTED, E.G. 1-CBA-PI-21002.
10. CHILLED WATER FLOW TO ONE AC UNIT AT A TIME.
11. FLOW SWITCHES & TEMPERATURE ELEMENTS FURNISHED BY CHILLER MANUFACTURER AND INSTALLED IN FIELD.
12. TCV-21006 FAILS AS IS ON LOSS OF POWER, FAILS TO FULL COOLING ON LOSS OF SIGNAL WITH POWER.

REV	DATE	DSGN	DRWN	CHKD	CDE	SES	DESCRIPTION
6	5/12/00	DWS	—	BCS	MPW	DJM	INCORP DCR 980039 DCN#84
5	3/10/99	DWS	—	BCS	MPW	DJM	REINCORP. DCR 980025 DCN#31 & 32
4	11/4/98	BCS	—	MPW	DWS	DJM	REINCORP. DCR 98-0025 DCN 28
3	10-9-98	BCS	—	DWS	MPW	DJM	REINCORP. DCR 98-0025 DCN 19
2	10-2-98	BCS	—	DWS	MPW	GRM	INCORP. 98-0025 DCN-08, 16,19, 24 & 26
1	9-15-98	BCS	—	DWS	MPW	RRC	PARTIAL INCORP. PER DCR 98-0025 DCN-00 AND DCN 06
0	8-20-98	DWS	—	MPW	BCS	RSG	INITIAL ISSUE PER DCR 98-0025 DCN 00

REF. DRAWING NO.	REV	TITLE
9763-F-604167	11	CONTROL RM AIR COND SYS. REFRIG.

North Atlantic Energy Service Corporation

SEABROOK STATION

CONTROL BUILDING AIR CONDITIONING SYSTEM NNS CHILLED WATER SYSTEM

DCR 980039

PID- 1-CBA-B20309

04/27/00

CATEGORY 1

P10- 1-FP-B20264

FOR P&ID REFERENCE DRAWINGS, SYMBOLS AND ABBREVIATIONS REFER TO DRAWINGS P&ID - LEGEND 1 AND P&ID - LEGEND 2

20266 FIRE PROTECTION TANKS
FUEL OIL DAY TANK TK-35B
TK-35B
TK-36A
FUEL OIL DAY TANK TK-35A
FIRE PUMP HOUSE
CHANGE HOUSE
CONSTRUCTION OFFICE
20275 GUARD HOUSE
UNIT 2
UNIT 1
12" FIRE MAIN
FH *28
FH *27
FH *13
FH *23
FH *12
FH *11
FH *14
FH *10
CARPENTER SHOP
WAREHOUSE NO.3
WAREHOUSE NO.2
WAREHOUSE NO.1
FH *21
FH *2
FH *38
FH *32
FH *31
FH *22
FH *19
TEST LAB
NEW CORP. OFFICE BLDG.
TURBINE BUILDING UNIT 2
NON-ESSENTIAL SWITCHGEAR ROOM
FH *15
FH *24
MINI - STATION
TRANSFORMERS
NOTE: SEE DWG 20289 FOR FIRE PROTECTION TO TRANSFORMERS
20267
20269
20270
ADMINISTRATION BUILDING
TURBINE BUILDING UNIT 1
DCR 82-816
CPS BLDG.
LUBE OIL STORAGE BLDG.
CONDENSATE TANK
FH *18
20267 MECHANICAL MAINTENANCE STORAGE FACILITY
DIESEL GENERATOR BUILDING UNIT 2
CONTROL BUILDING
EMERGENCY FEEDWATER PUMP BLDG. UNIT 2
NOT INSTALLED
FH *17A
20271
20268
EMERGENCY FEEDWATER PUMP BLDG.
CONTAINMENT UNIT 2
CONTAINMENT UNIT 1
EQUIPMENT VAULT
FH *16
FH *17
FH *3
FH *9
REFUELING WATER STORAGE TANK AREA UNIT 2
PRIMARY AUXILIARY BUILDING
WASTE PROCESSING BUILDING
REFUELING WATER STORAGE TANK AREA
TANK FARM AREA
FUEL STORAGE BUILDING
STM. GEN. BLOWDOWN RECOVERY
CIRCULATING WATER SERVICE WATER PUMP HOUSE
A.K.A. HIGH RISE OFFICE BLDG.
MECH. SHOP & CLASS ROOM
ELECTRICAL SHOP
TRAINING CENTER
EDUCATION FACILITY
FH *29
FH *25
FH *28
FH *4
FH *5
FH *4A
FH *5A
FH *6
FH *7
FH *8
RCA STORAGE FACILITY
CHLORINATION BUILDING
COOLING TOWER
DCR 83-882
2 1/2"
HC
SEPS EMERG. FILL CONN. FROM HYDRANT
1-SEPS-DO-2B
1-SEPS-DO-2A
1-SEPS-SVG-1
2-FP-V7
2-FP-V10
2-FP-V11
2-FP-V42
2-FP-V45
2-FP-V494
2-FP-V498
2-FP-V358
2-FP-V359
12" FIRE MAIN
FOR YARD PIPING REFER TO FP-20274

NOTES:
1. ALL LINES, EQUIPMENT, COMPONENTS AND INSTRUMENTATION ARE PREFIXED "FP", UNLESS NOTED OTHERWISE.
2. WORK THIS DRAWING WITH DRAWINGS 28266 THRU 28275
3. ALL LINES, EQUIPMENT, COMPONENTS AND INSTRUMENTS ARE SAFETY CLASS NNS
4. △ INDICATES REVISION LEVEL.
5. DELETED
6. N.I. INDICATES PIPING AND EQUIPMENT NOT INSTALLED.
7. F.P. STRAINERS ARE LOCATED INSIDE BUILDING

REV	DATE	DSGN	CHKD	CE	DESCRIPTION
13	[illegible]	BCS	JM	[illegible]	INCORP DCR 83-882 DCN-88, DCR 82-816 DCN-86
12	10/8/92	MPW	JM	BCS	REINCORP. DCR 93-2006 DCN 88
11	88-13-92	JM	MPW	BCS	INCORP CR 88-80724-01, ADDED DWG No.
10	88-24-98	DWS	MPW	SNC	INCORP DCR 9908008 DCN-#90
9	10-22-97	DWS	MPW	SNC	INCORP MMOD 9508585 CA#2
8	12/8/94	BCL	DWS	BCL	INCORPORATED MMOD 92-553 CA-01
7	2/21/90	MRB	JM	ERT	INCORPORATED DCR 89-78 CA16
6	2/28/18	MRB	APL	RB	INCORP DCR 87-233 CA 1, PWR 89-881 CA# 8,REVISED VALVE POSITION FROM OPEN TO CLOSED FOR 2-FP-V598 PER P&ID 20274 AND NOTE 2.
5	2/3/89	MRB	GPM	ERT	INCORP DRR 88-15 CA8 REVISED,FIRE HOSE REEL ASSEMBLY ONSDWG'S,V418,V37,V598,V552,2-FP-V598 V982 & V983 PER PID 20274. DELETED LEGEND INFORMATION
4	7/22/87	GPM	VRD	ERT	MODIFIED DWG TO REFLECT OVERVIEW INFO ONLY, INCORP NCR 87-80007, ADDED FIRE HYDRANTS & REVISED NOTE 3.
3	9/2/86	MAP	JDM	RRC	RE-INCORP NCR 82/992C INCORP ECA 99/1161050
2	7/2/86	WES	BCL	RRC	INCORP ECA'S 19/1154310, 86/1157290, NCR 82/992C, 99/1144830, 99/1161550 AND UPDATED PER UE&C P&ID REVIEW CHANGE ITEM 1 RESOLVED PER ECA 99/886173A
1	1/22/86	WES	DWS	EWD	ISSUED FOR OPERATIONS, GENERAL REVISIONS & INCORP ECA 99/1185917A
0	10/15/84	CB	JNM	PEF	ISSUED FOR FIELD VERIFICATION

REF. DRAWING NO.	REV	TITLE
9763-F-684868	16	YARD FP P&ID
9763-F-684869	15	YARD & FIRE PUMPHOUSE FP P&ID

FPL ENERGY Seabrook Station

FIRE PROTECTION OVERVIEW

PID- 1-FP-B20264

04/20/05

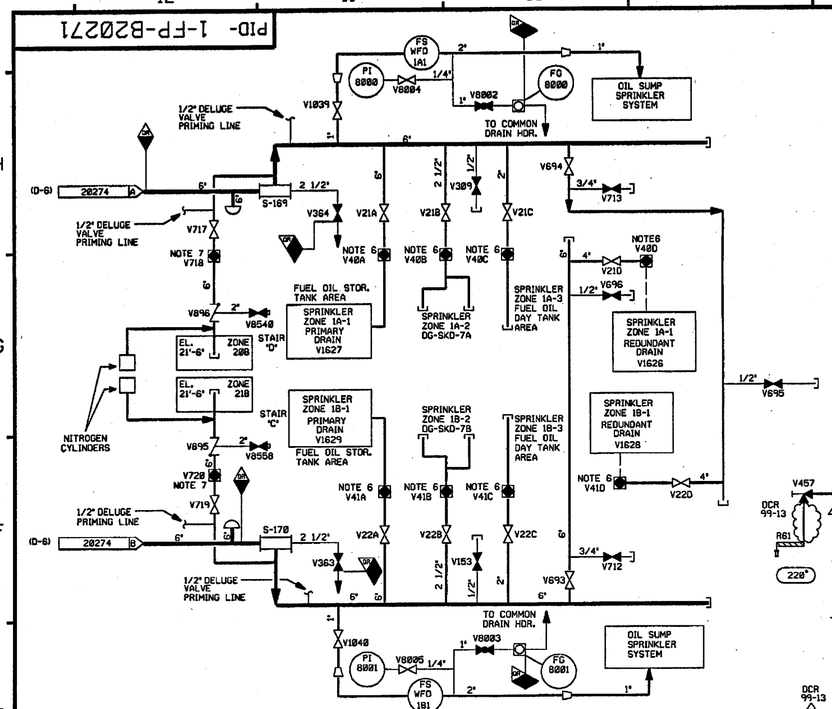

PARTIAL DIAGRAM OF DIESEL GEN. BLDG.

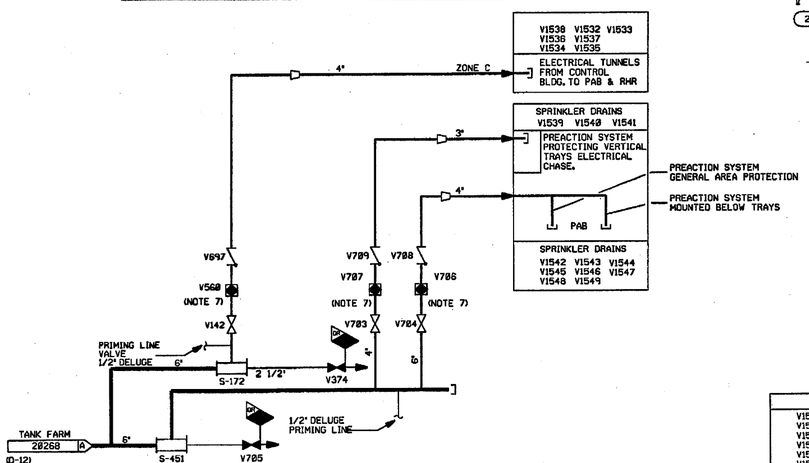

DIAGRAM OF ELECTRICAL TUNNEL AND PAB

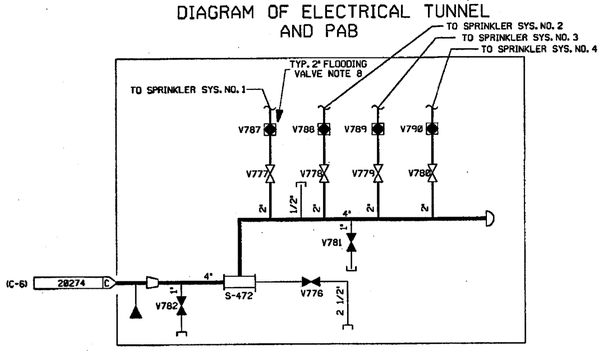

PARTIAL DIAGRAM OF WASTE PROCESSING BLDG.

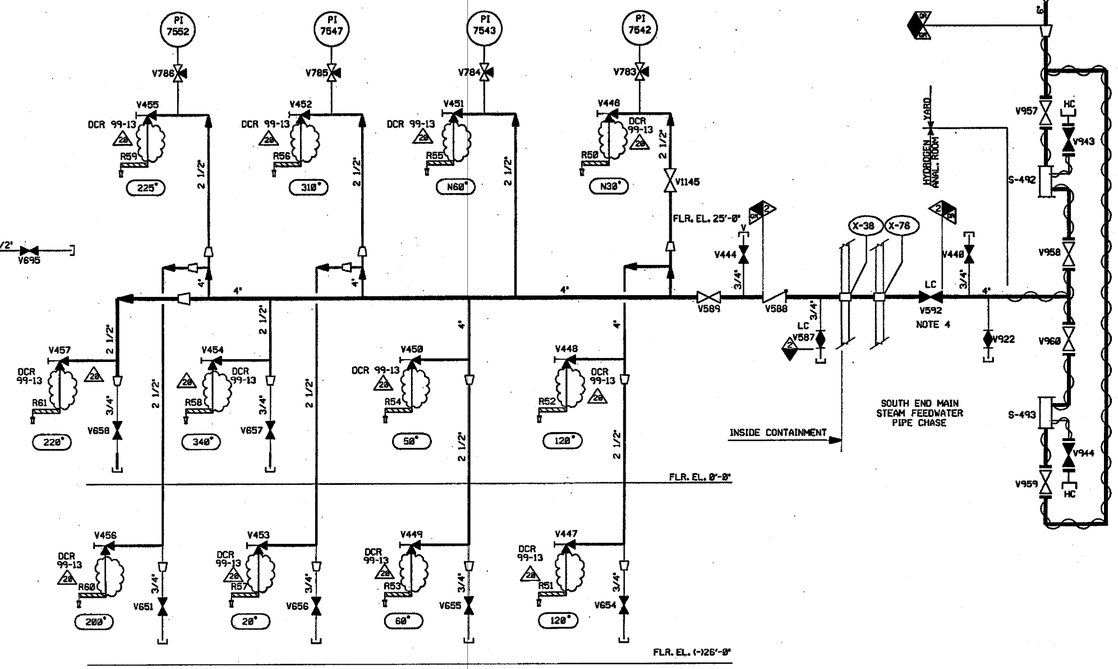

CONTAINMENT BLDG. DRY STANDPIPE DIAGRAM

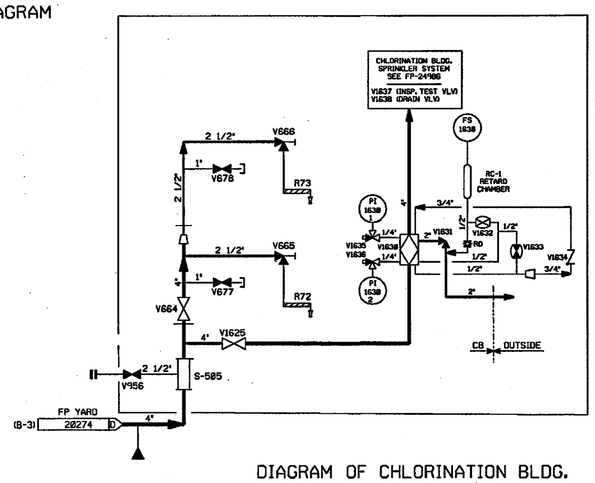

DIAGRAM OF CHLORINATION BLDG.

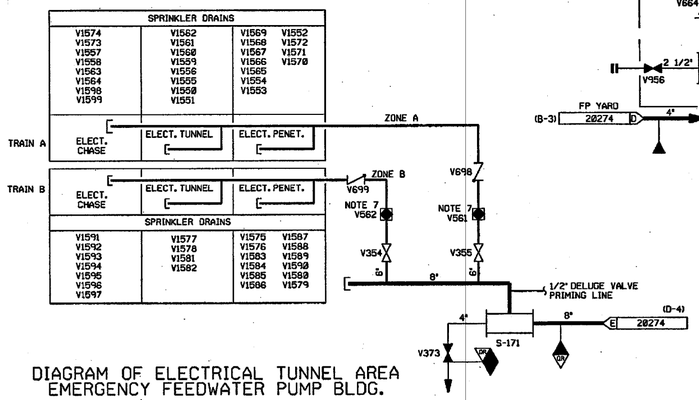

DIAGRAM OF ELECTRICAL TUNNEL AREA EMERGENCY FEEDWATER PUMP BLDG.

REF. DRAWING NO.	REV	TITLE
9763-F-885175	8	CONT. STRUCT. PIPING ZONE 26A
9763-F-884520	2	WASTE PROCESSING BLDG. FIRE PROT. SYS.
9763-F-884868	18	YARD FIRE PROTECTION P&ID
9763-F-884146	10	FIRE PROTECTION SYS. STANDPIPE DIAGRAMS
9763-F-884462	3	CHLOR. BLDG. FIRE PROTECTION PIPING

FOR P&ID REFERENCE DRAWINGS, SYMBOLS AND ABBREVIATIONS REFER TO DRAWINGS P&ID - LEGEND 1 AND P&ID - LEGEND 2

NOTES:
1. ALL LINES, EQUIPMENT, COMPONENTS AND INSTRUMENTS HAVE SYSTEM PREFIX FP, UNLESS NOTED OTHERWISE.
2. DELETED
3. DELETED
4. STANDPIPE SYSTEM WITHIN CONTAINMENT SHALL BE DRAINED PRIOR TO OPERATION OF UNIT. VALVE MUST BE CLOSED IN MODE 1,2,3,4 AND CAN BE OPENED IN MODE 5.
5. ALL LINES, EQUIPMENT, COMPONENTS AND INSTRUMENTS ARE SAFETY CLASS NNS, UNLESS NOTED OTHERWISE.
6. SEE DETAIL A, DWG. 20272.
7. SEE DETAIL B, DWG. 20272.
8. SEE DETAIL C, DWG. 20272.
9. △ INDICATES REVISION LEVEL.
10. DELETED
11. DELETED
12. DELETED
13. DELETED
14. DELETED

PORTIONS OF THIS DRAWING ARE
NUCLEAR SAFETY RELATED

REV	DATE	DSGN	CHKD	CE	DESCRIPTION
20	10/12/06	BCS	JWL	MPW	INCORP DCR 99-13, DCN-00
19	3/16/06	BCS	JM	DMQ	INCORP DCR 99-13, DCN-00 (PARTIAL)
18	8/28/03	BCS	MPW	ERT	RE-INCORP ECA 99/1482A
17	7/30/03	BCS	JM	MPW	RE-INCORP ECA 99/1482A
16	1/7/02	BCS	JM	ERT	INCORP DCR 00-0084 DCN-00, 02
15	8/31/00	BCS	MPW	AJK	INCORP MSE 99-328 REV. 0, ECA 99/1482A
14	6/2/98	DRL	MPW	VWS	INCORP MMOD 96-559 DCN 02 & MMOD 97-521 DCN 00
13	8/18/97	MPW	BCS	VWS	INCORP MMOD 96-559 DCN 01
12	6/7/97	MPW	DWS	BAB	INCORP DCR 96-31 DCN#02
11	3/28/94	DWS	BCL	JCM	INCORP DCR 92012 CA#0
10	4/17/92	MRB	DWS	RRB	INCORP MMOD 91-515 CA0
9	10/25/98	MRB	JM	ERT	INCORP. DRR 89-41 REV 1 DELETED OPEN ITEM ABOVE AND NOTES 11 & 13 PER REVISED NOTE 3 ADDED FLOW SWITCHES PER RES 88-427
8	6/23/89	MRB	PAL	ERT FOR RB	INCORPORATED DRR 89-41 REV 0 DELETED: FIRE HOSE LEGEND
7	10/7/88	GPM	APL	ERT	INCORP DCR 86-715 CA 02 ADDED: NOTE 14
6	5/16/88	DWS	GPM	ERT	ADDED: CHANGE ITEM-2 REVISED: VALVE NO'S FROM V8006, 7 TO V8540, 58. DELETED: NNS-1 DESIGNATION
5	9/8/87	GPM	MRJ	ERT	INCORP. DCR 87-270 REVISED: NOTE 5, CONT. DWG NO. ADDED: NOTE 13, CHANGE ITEM 1, OR BOUNDARIES.
4	12/30/86	MPW	WRD	DCM	ADDED WP8 SPRINKLER SYS. NO'S. PER FP-46830, REVISED DWG. CONTIN. REF'S REMOVED SPRINKLERS FOR CABLE SPREADING AREA, ADDED NOTES 11 & 12, AND REDREW ELEC. TUNNEL AND PAB PER ENG. COMMENTS CORRECTED DRAFTING ERRORS. ADDED VLV'S V8006, V8007 PER GRINNEL MANUAL, CONT. REF. LOCATIONS. CHANGED VALVE V587 FROM GATE TO PLUG AND ADDED CAP PER ERECTION ISO. DELETED NOTE 10.
3	9/2/86	MAP	PAL	RRC	INCORP ECA 83/1143818A, 99/117673A
2	6/27/86	JDM	BCL	RRC	INCORP. NCR 82/992C, ECA 99/1090188 APPROVED CHANGE ITEM NUMBERS 2,3,4,5 BY DETAILING VENDOR PIPING ADDED VALVE NOS. & PI NOS.
1	1/22/86	WES	DWS	EWD	ISSUED FOR OPERATIONS GENERAL REVISIONS
0	10/16/84	CB	JNM	PEF	ISSUED FOR FIELD VERIFICATION

FPL ENERGY Seabrook Station

FIRE PROTECTION DETAILS

PID- 1-FP-B20271

09/30/06

PID- 1-FP-B20274

FOR P&ID REFERENCE DRAWINGS, SYMBOLS AND ABBREVIATIONS REFER TO DRAWINGS P&ID - LEGEND 1 AND P&ID - LEGEND 2

FUEL OIL DAY TANK TK-35B
FUEL OIL DAY TANK TK-35A
FIRE PROTECTION TANKS
TK-36B
TK-36A
FIRE PUMP HOUSE
(A-10) 28266
(A-9) 28266
(A-7) 28266
UNIT 2
UNIT 1
GUARD HOUSE BUILDING
28275 (B-3)
HOSE HOUSE NO.11
CHANGE HOUSE
CONSTRUCTION OFFICE
FH NO. 1
12" FIRE MAIN
HOSE HOUSE NO.1
TRANSFORMERS
MINI - STATION
HOSE HOUSE NO.7
NOTE: SEE DWG. B28269 FOR FIRE PROTECTION TO TRANSFORMERS
COLD JOINT SHOP
WAREHOUSE NO.3
WAREHOUSE NO.2
WAREHOUSE NO.1
CARPENTER SHOP
FH NO. 18
HOSE HOUSE NO.2
TURBINE BUILDING UNIT 2
ADMINISTRATION BUILDING
TURBINE BUILDING UNIT 1
LUBE OIL STORAGE BLDG.
HOSE HOUSE NO. 12
NON-ESSENTIAL SWITCHGEAR ROOM
HOSE HOUSE NO.9A
CONDENSATE TANK
DIESEL GENERATOR BUILDING UNIT 2
CONTROL BUILDING
EMERGENCY FEEDWATER PUMP BLDG. UNIT 2
DIESEL GENERATOR BUILDING (F-12) 28271
HOSE HOUSE 9A
EMERGENCY FEEDWATER PUMP BLDG. (B-5) 28271
MECHANICAL MAINTENANCE STORAGE FACILITY (A-9) 28267
EQUIPMENT VAULT
CONTAINMENT UNIT 2
CONTAINMENT UNIT 1
REFUELING WATER STORAGE TANK AREA UNIT 2
PRIMARY AUXILIARY BUILDING
FUEL STORAGE BUILDING
WASTE PROCESSING BUILDING
REFUELING WATER STORAGE TANK AREA
TANK FARM AREA
STM. GEN. BLOWDOWN RECOVERY
PRIMARY AUXILIARY BUILDING
CIRCULATING WATER SERVICE WATER PUMP HOUSE
HOSE HOUSE NO.5
CHLORINATION BUILDING
RCA STORAGE FACILITY 20267 (B-6)
HOSE HOUSE NO.4
HOSE HOUSE NO.8
HOSE HOUSE NO.10
TEST LAB
HIGH RISE BLDG.
MECH. SHOP & CLASS ROOM
ELECTRICAL SHOP
TRAINING CENTER
EDUCATION FACILITY
GOB
FH NO. 22
FH NO. 28
FH NO. 25
FH NO.4
FH NO.4A
2 1/2" HC (SEPS EMERG. FILL CONN. FROM HYDRANT
1-SEPS-DG-2B
1-SEPS-DG-2A
1-SEPS-SWG-1
13 DCR 83-002

NOTES:
1. ALL LINES, EQUIPMENT, COMPONENTS AND INSTRUMENTATION ARE PREFIXED "FP", UNLESS NOTED OTHERWISE.
2. WORK THIS DRAWING WITH DRAWINGS 28264, 28266 THRU 28275.
3. ALL LINES, EQUIPMENT, COMPONENTS AND INSTRUMENTS ARE SAFETY CLASS NNS
4. △ INDICATES REVISION LEVEL.
5. N.I. INDICATES PIPING AND EQUIPMENT NOT INSTALLED.
6. F.P. STRAINERS ARE LOCATED INSIDE BUILDING, EXCEPT CONTAINMENT.
7. THESE DEVICES ARE PART OF UNIT 1.

REV	DATE	DSGN	CHKD	CE	DESCRIPTION
13	4-22-05	BCS	JM	RRB	INCORP DCR 83-002 DCN-00
12	5/8/02	MPW	JM	RRB	INCORP MSE 02-074 REV. 00
11	6/22/00	DWS	MPW	JNE	INCORP DCR 99-008 DCN-00 & 05
10	6/2/98	DRL	BCS	VWS	INCORP. MMOD 97-521 DCN 00
9	10/22/97	DWS	MPW	SNC	INCORP MMOD 950585 CA- 02
8	3/4/94	MRB	BCL	GRM	INCORP. MMOD 92-553 CA01
7	3/31/93	MRB	BCL	JCM	INCORP. MMOD 92-553 CA0
6	4/21/92	MRB	BCL	JEV	INCORP. MMOD 91-515 CA0,01
5	12/21/90	MRB	RMC	ERT	INCORP. DCR 89-78 CA 16
4	9/24/90	MRB	JM	BCL	INCORP. MMOD 90-516 CA 0
3	2/28/90	MRB	APL	RB	INCORP DCR 87-233 CA 1 & MMOD 89-545 INCORP. FMR 89-001 CA00 REVISED: OPERATOR VALVE SYMBOL, DWG CONT COORD'S AND NOTE 2. ADDED: DWG CONT NO & COORD.
2	2/3/89	MRB	GPM	ERT	INCORPORATED DRR 88-15 CA0 DELETED: LEGEND INFOMATION REVISED: F. H. NO 12 TO 22 PER UE & C DRAWING
1	9/8/87	GPM	MPW	ERT	INCORP ECA 99/1161550, REVISED: PIPING CONFIG PER NCR 87-0007, NOTE 3 ADDED: DR BOUNDARYS & CORRECTED DRAFTING ERRORS.
0	1-8-87	SHY	WRD	ERT	ISSUED FOR OPERATIONS

REF. DRAWING NO.	REV	TITLE
9763-F-604068	16	YARD FP P&ID
9763-F-604069	15	YARD & FIRE PUMPHOUSE FP P&ID

FPL ENERGY Seabrook Station

FIRE PROTECTION YARD PIPING

PID- 1-FP-B20274

04/20/05

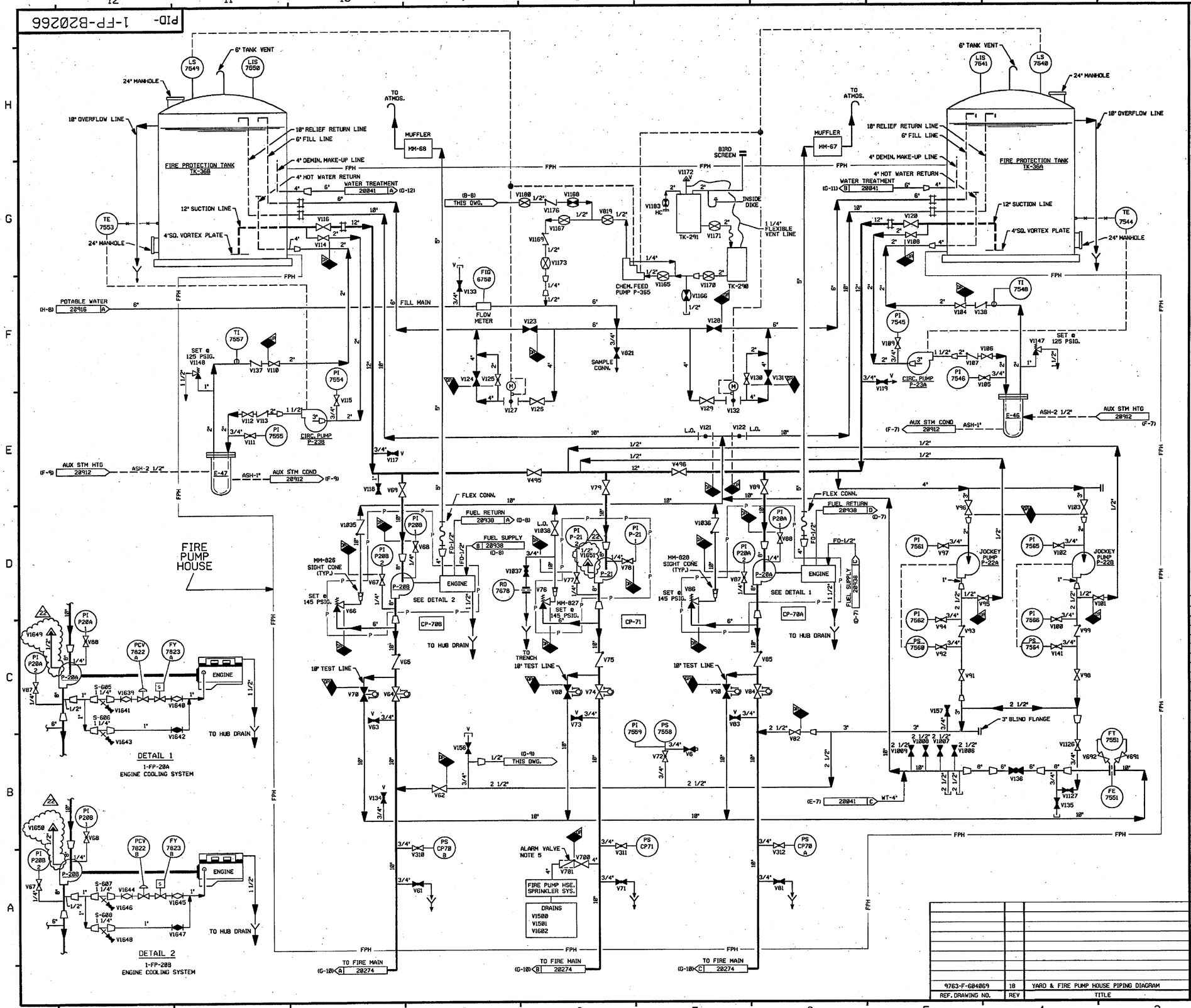

FOR P&ID REFERENCE DRAWINGS, SYMBOLS AND ABBREVIATIONS REFER TO DRAWINGS P&ID-LEGEND 1 AND P&ID-LEGEND 2.

NOTES:

1. ALL LINES, EQUIPMENT, COMPONENTS AND INSTRUMENTATION HAVE SYS. PREFIX FP, UNLESS NOTED OTHERWISE.
2. WORK THIS DRAWING WITH DRAWINGS 20264 AND 20267 THRU 20272.
3. ALL LINES, EQUIPMENT, COMPONENTS AND INSTRUMENTS ARE SAFETY CLASS NNS, UNLESS NOTED OTHERWISE.
4. DELETED
5. SEE DETAIL "D" DWG. 20272.
6. △ INDICATES REVISION LEVEL.
7. DELETED
8. -QR- CALIBRATION ONLY
9. VENTS & DRAIN TAP QR BOUNDRY ARE AT THE DOWN STREAM END OF THE OUTER ISOLATION VALVE.

REV	DATE	DSGN	CHKD	CE	DESCRIPTION
22	12-30-03	BCS	JM	RRB	INCORP. CR 02-13172 REV. 00
21	6/11/03	JM	BCS	MPW	INCORP. CR 03-00751 REV 00
20	8/13/02	JM	MPW	BCS	INCORP. CR# 00-02311-01
19	10/15/01	JM	BCS	JCM	INCORP. CR# 01-04266-01
18	5/26/00	BCS	MPW	JCM	INCORP. DCR 98-24 DCN 10
17	4/28/00	BCS	MPW	JCM	INCORP. DCR 98-24 DCN 00, 02, 03, 07
16	2/23/00	BCS	DWS	JCM	PARTIAL INCORP. DCR 98-24 DCN 00
15	1/28/99	BCS	DWS	JCM	INCORP. MMOD 98-634 DCN 00
14	10/30/98	MPW	BCS	DJM	INCORP. MMOD 97-534 DCN 00
13	11/25/97	BCS	MRB	ETM	INCORP. DCR 97-23 DCN-0
12	5/2/96	BCS	DWS	JCM	INCORP. DCR 95-18 CA-0
11	3/5/95	BCL	MPW	JCM	INCORP. MMOD 94-514 CA-0
10	3/8/94	MRB	BCL	GRM	INCORP. MMOD 92-553 CA01 & MMOD 93-553 CA-0
9	12/13/93	MRB	BCL	RSG	INCORP. DCR 86-140 CA 04
8	11/1/93	BCL	DWS	JCM	INCORP. MMOD 93-501 CA-0
7	10/25/90	MRB	JM	ERT	INCORP. DRR 89-41 REV 01
6	5/22/89	GPM	MRB	ERT for RB	INCORP.: DCR 86-325 CA 01 & DRR 89-41 REVISED: PIPING TO CLARIFY DUPLICATION OF SYSTEM INTERFACES ADDED: CONT. COORDS. DELETED: NOTE 4 AND ITEM IN THE IIL.
5	8/20/87	GPM	MRJ	ERT	REVISED NOTE 3, ADDED NOTE 8 & 9, QR BOUNDARIES DELETED NOTE 10.
4	04/08/87	MRJ	DWS	ERT	ADDED VALVES PER AS-INSTALLED CONDITIONS, REVISED SYMBOL FOR CHAIN OPERATED VALVES.
3	10/17/86	MPW	BCL	RRC	ADDED CONT REF LOCATIONS, DELETED NOTE 7, REVISED INSTR LOCATION PER ERECTION ISO, VALVE NO'S PER UE&C P&ID, CORRECTED DRAFTING ERRORS, LISTED ECA 99/116333A & DR 95/006B IN IIL
2	6/24/86	DWS	VNK	RRC	CHANGE ITEMS 1,2,3,4,6 & 7 RESOLVED PER ECA 19/116491A, 99/114512A, DR 95/006B, CPR-35. ADDED FUEL OIL CONT. & REV'D PW CONT.
1	1/22/86	WES	DWS	EWD	ISSUED FOR OPERATIONS, GENERAL REVISIONS INCORPORATED ECA'S 99/17638, 99/02708 86/108100E
0	10/16/84	CB	JNM	PEF	ISSUED FOR FIELD VERIFICATION

REF. DRAWING NO.	REV	TITLE
9763-F-604069	18	YARD & FIRE PUMP HOUSE PIPING DIAGRAM

FPL ENERGY Seabrook Station

FIRE PROTECTION
FIRE PUMP HOUSE
DETAIL

PID- 1-FP-B20266

12/29/03

PID- 1-FO-B20938

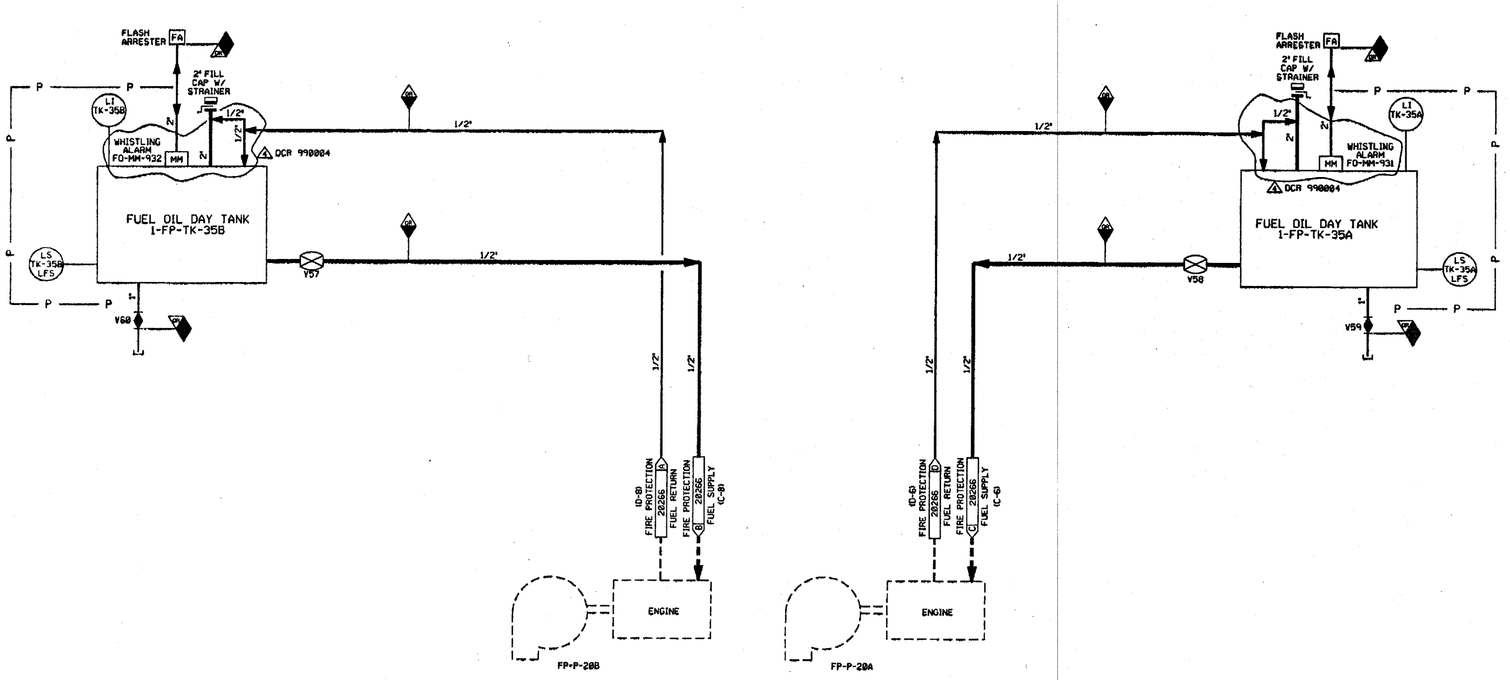

FOR P&ID REFERENCE DRAWINGS, SYMBOLS AND ABBREVIATIONS REFER TO DRAWINGS P&ID - LEGEND 1 AND P&ID - LEGEND 2

NOTES:

1. THE FO IS A ONE DWG. SYSTEM AND AN OVERVIEW IS NOT REQUIRED.
2. ALL LINES, EQUIPMENT, COMPONENTS AND INSTRUMENTS HAVE SYTEM PREFIX FO UNLESS NOTED.
3. ALL LINES, EQUIPMENT, COMPONENTS, AND INSTRUMENTS ARE SAFETY CLASS NNS UNLESS NOTED.

REV	DATE	DSGN	DRWN	CHKD	CDE	SES	DESCRIPTION
4	4/7/00	DWS	—	MPW	BCS	[illegible]	INCORP OF DCR 990004 DCN#00
3	1/16/97	BCS	—	DWS	MPW	BCS	INCORP. MMOD 94-516 CA-8
2	9/22/87	GPM	JM	MRJ	BCL	ERT	REVISED: NOTE 3, REDUNDANT PIPING ADDED: OR BOUNDARIES PER CEM-87-503 P&ID REF DWG NOTE, DWG CONT COORD'S.
1	6/18/86	WES	WES	VNK	JMcS	RRC	UPDATED PER UE&C P&ID
0	5/6/86	WES	WES	JDM	DFM	AFD	ISSUED FOR OPERATIONS

REF. DRAWING NO.	REV	TITLE
9763-F-604069	16	YARD & FIRE PUMPHOUSE FIRE PROTECTION

North Atlantic Energy Service Corporation

SEABROOK STATION

FUEL OIL SYSTEM

PID- 1-FO-B20938

04/07/00

PID- 1-FP-B20269

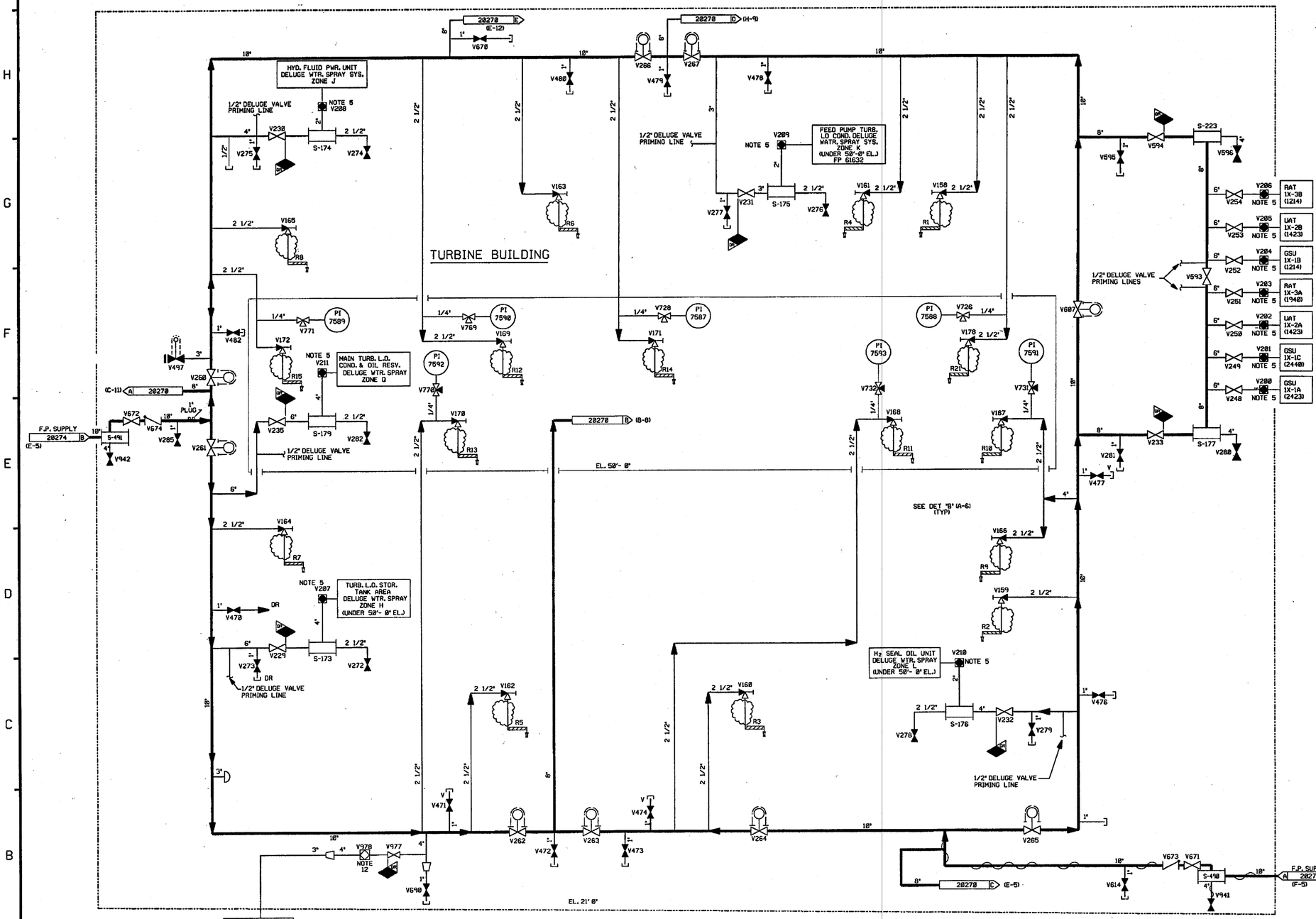

FOR P&ID REFERENCE DRAWINGS, SYMBOLS AND ABBREVIATIONS REFER TO DRAWINGS P&ID - LEGEND 1 AND P&ID - LEGEND 2.

NOTES:

1. ALL LINES, EQUIPMENT, COMPONENTS AND INSTRUMENTATION ARE PREFIXED "FP", UNLESS NOTED OTHERWISE.
2. WORK THIS DRAWING WITH DRAWINGS 20264, 20266, 20267, 20268, 20270, 20271 THRU 20274.
3. DELETED
4. ALL LINES, EQUIPMENT, COMPONENTS AND INSTRUMENTS ARE SAFETY CLASS NNS, UNLESS NOTED OTHERWISE.
5. SEE DETAILS ON PID FP-20272.
6. △ INDICATES REVISION LEVEL.
7. DELETED
8. DELETED
10. ◇ INDICATES DWG. CHANGE ITEM NUMBER.
11. VENT, DRAIN & INSTRUMENT TAPS OR BOUNDARY ARE AT THE DOWNSTREAM END OF THE OUTER ISOLATION VALVE.
12. SEE DETAIL "F" ON DWG 20272.

REV	DATE	DSGN	CHKD	CE	DESCRIPTION
15	3/16/06	BCS	JM	DHQ	INCORP. DCR 99-13 DCN-00
14	9/29/05	BCS	JM	RRB	INCORP. CR 05-09878 REV. 0
13	12/28/04	BCS	JM	RRB	INCORPORATED MMOD 04-528 DCN-00
12	10/31/02	BCS	MPW	MKC	INCORPORATED DCR 00-014 DCN-00
11	5/29/02	MPW	BCS	DJM	INCORPORATED DCR 97-012 DCN 27
10	8/27/99	MPW	BCS	RWS	ADDED LINE SIZE PER FP 61632. REVISED NOTE 5 FOR GENERAL REFERENCE.
9	12/16/94	BCL	MPW	RSG	INCORPORATED MMOD 94-548 CA0
8	3/24/94	MRB	BCL	WFZ	INCORPORATED MMOD 92-553 CA*01 & DCR 930816 CA*0
7	3/31/93	MRB	BCL	JCM	INCORPORATED MMOD 92-553 CA0
6	4/28/92	MRB	DWS	RRB	INCORPORATED MMOD 91-515 CA0
5	9/28/87	MPW	DWS	RRC	INCORPORATED DCR 87-157
4	8/19/87	GPM	MPW	EAT	REVISED: NOTE 4, REINCORPORATED ECA 74/113324E. ADDED: QR BOUNDARIES DET. B, NOTES 9,10, CHANGE ITEMS 1&2.
3	12/30/86	MPW	WRD	DCM	REVISED CONT. REFS., LUBE OIL STORAGE ROOM SPRINKLER HEADER LOCATION PER FIELD WALKDOWN. REVISED CHAIN OPERATOR SYMBOL PER P&ID LEGEND ADDED NOTE 9. ADDED REF. DWG. LOCATIONS. DELETED NOTE 7. ADDED N.C. TO V497, PLUGS VENT AND DRAIN PIPING, CAPS, PLUGGED CONNECTIONS AND REVISED TIE-IN LOC. AND VALVE NO. PER ERECTION ISO.
2	8/23/86	WES	VNK	RRC	INCORP. NCR 82/992C, ECA 74/11324E & CHG. ITEM 1 RESOLVED BY CPR-34 & UPDATE PER LATEST P&ID.
1	1/22/86	WES	DWS	EWD	ISSUED FOR OPERATIONS GENERAL REVISIONS
0	10/16/84	CB	JNM	PEF	ISSUED FOR FIELD VERIFICATION

9763-F-604070	10	TURBINE BLDG FIRE PROTECTION P&ID
REF. DRAWING NO.	REV	TITLE

FPL ENERGY Seabrook Station

FIRE PROTECTION TURBINE BUILDING DETAIL SHEET 1 OF 2

PID- 1-FP-B20269

03/15/06

PID-1-FP-B20270

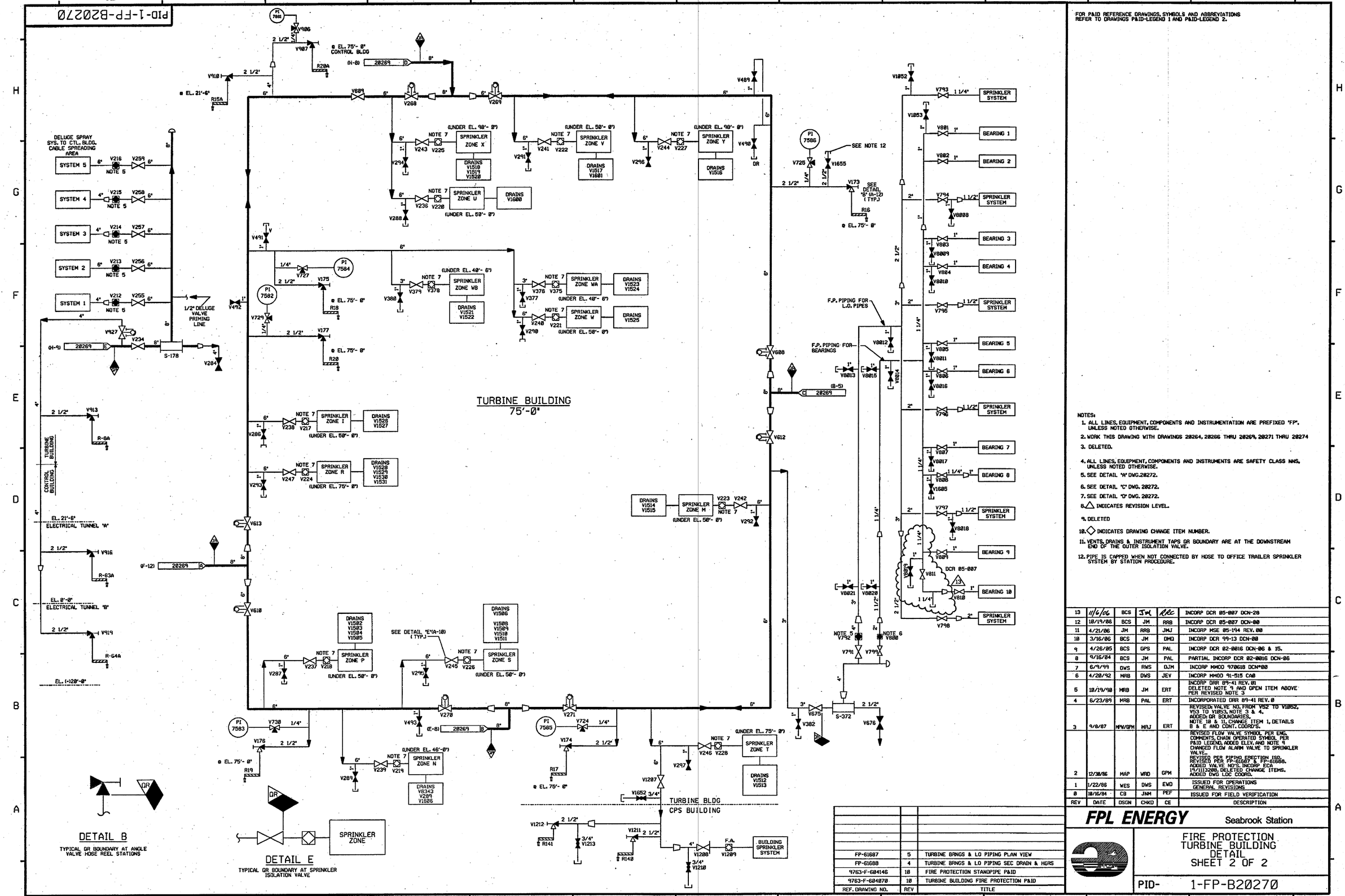

FOR P&ID REFERENCE DRAWINGS, SYMBOLS AND ABBREVIATIONS REFER TO DRAWINGS P&ID-LEGEND 1 AND P&ID-LEGEND 2.

NOTES:

1. ALL LINES, EQUIPMENT, COMPONENTS AND INSTRUMENTATION ARE PREFIXED "FP", UNLESS NOTED OTHERWISE.
2. WORK THIS DRAWING WITH DRAWINGS 28264, 28266 THRU 28269, 28271 THRU 28274
3. DELETED.
4. ALL LINES, EQUIPMENT, COMPONENTS AND INSTRUMENTS ARE SAFETY CLASS NNS, UNLESS NOTED OTHERWISE.
5. SEE DETAIL "A" DWG.28272.
6. SEE DETAIL "C" DWG. 28272.
7. SEE DETAIL "D" DWG. 28272.
8. △ INDICATES REVISION LEVEL.
9. DELETED
10. ◇ INDICATES DRAWING CHANGE ITEM NUMBER.
11. VENTS, DRAINS & INSTRUMENT TAPS OR BOUNDARY ARE AT THE DOWNSTREAM END OF THE OUTER ISOLATION VALVE.
12. PIPE IS CAPPED WHEN NOT CONNECTED BY HOSE TO OFFICE TRAILER SPRINKLER SYSTEM BY STATION PROCEDURE.

REV	DATE	DSGN	CHKD	CE	DESCRIPTION
13	11/6/06	BCS	JWL	RRC	INCORP DCR 85-007 DCN-28
12	10/19/06	BCS	JM	RRB	INCORP DCR 85-007 DCN-00
11	4/21/06	JM	RRB	JMJ	INCORP MSE 85-194 REV. 00
10	3/16/06	BCS	JM	DMQ	INCORP DCR 99-13 DCN-00
9	4/26/05	BCS	GPS	PAL	INCORP DCR 82-0016 DCN-06 & 15.
8	9/16/04	BCS	JM	PAL	PARTIAL INCORP DCR 82-0016 DCN-06
7	6/9/99	DWS	RWS	DJM	INCORP MMOD 970618 DCN-00
6	4/28/92	MRB	DWS	JEV	INCORP MMOD 91-515 CA0
5	10/19/98	MRB	JM	ERT	INCORP DRR 89-41 REV. 01 DELETED NOTE 9 AND OPEN ITEM ABOVE PER REVISED NOTE 3
4	6/23/89	MRB	PAL	ERT	INCORPORATED DRR 89-41 REV. 0
3	9/8/87	MPW/GPM	MRJ	ERT	REVISED: VALVE NO. FROM V52 TO V1052, V53 TO V1053, NOTE 3 & 4, ADDED: QR BOUNDARIES, NOTE 10 & 11, CHANGE ITEM 1, DETAILS B & E AND CONT. COORD'S.
2	12/30/86	MAP	WRD	GPM	REVISED FLOW VALVE SYMBOL PER ENG. COMMENTS, CHAIN OPERATED SYMBOL PER P&ID LEGEND, ADDED ELEV. AND NOTE 9 CHANGED FLOW ALARM VALVE TO SPRINKLER VALVE. REVISED PER PIPING ERECTION ISO. REV'D/ISS PER FP-61687 & FP-61688. ADDED VALVE NO'S. INCORP ECA 19/11132BB, DELETED CHANGE ITEMS. ADDED DWG LOC COORD.
1	1/22/86	WES	DWS	EWD	ISSUED FOR OPERATIONS GENERAL REVISIONS
0	10/16/84	CS	JNM	PEF	ISSUED FOR FIELD VERIFICATION

REF. DRAWING NO.	REV	TITLE
FP-61687	5	TURBINE BRNGS & LO PIPING PLAN VIEW
FP-61688	4	TURBINE BRNGS & LO PIPING SEC DRAIN & HDRS
9763-F-684146	10	FIRE PROTECTION STANDPIPE P&ID
9763-F-684870	10	TURBINE BUILDING FIRE PROTECTION P&ID

FPL ENERGY Seabrook Station

FIRE PROTECTION TURBINE BUILDING DETAIL SHEET 2 OF 2

PID- 1-FP-B20270

11/06/06

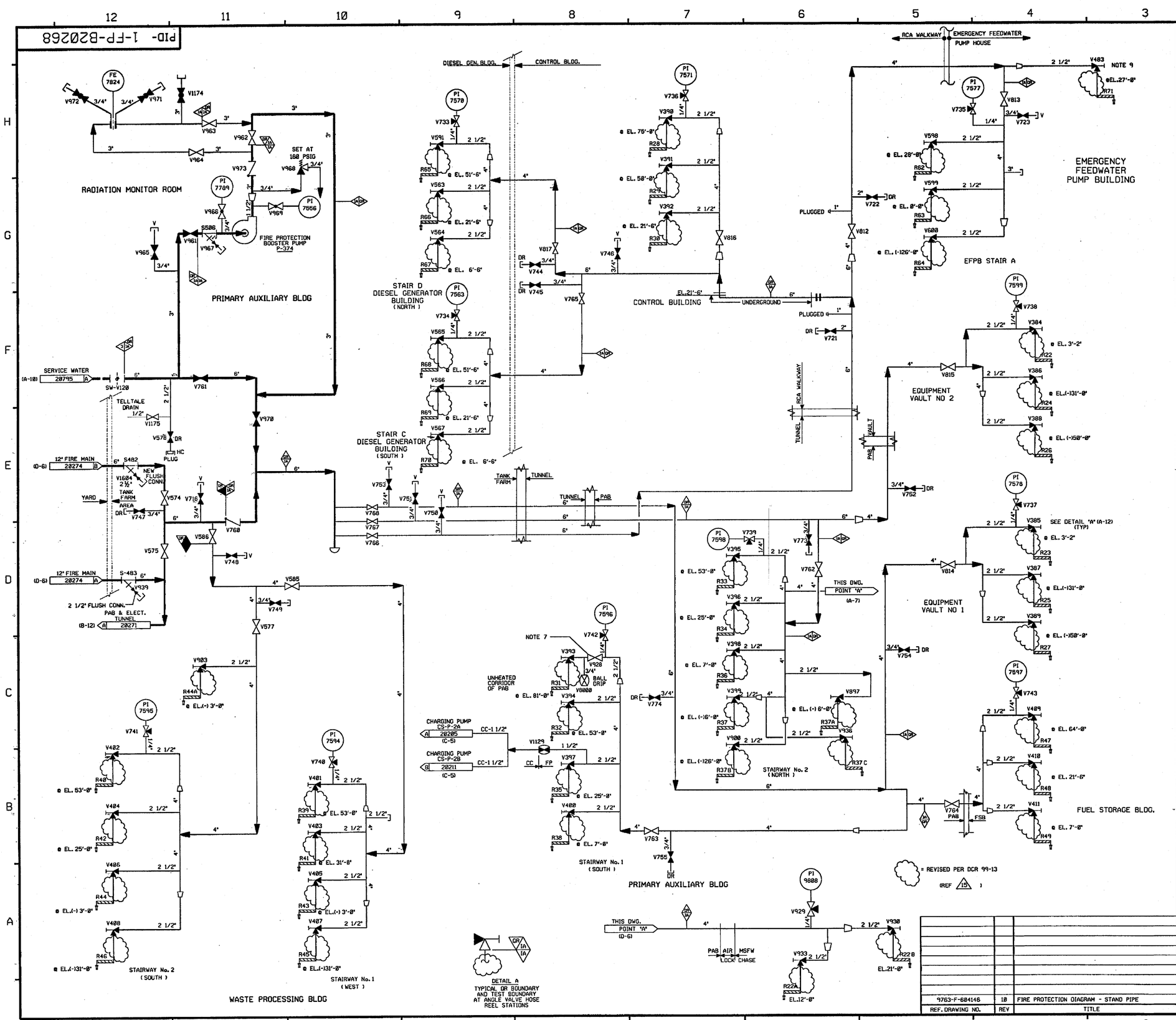

FOR P&ID REFERENCE DRAWINGS, SYMBOLS AND ABBREVIATIONS REFER TO DRAWINGS P&ID - LEGEND 1 AND P&ID - LEGEND 2

NOTES:

1. ALL LINES, EQUIPMENT, COMPONENTS AND INSTRUMENTATION ARE PREFIXED "FP", UNLESS NOTED OTHERWISE.
2. WORK THIS DRAWING WITH DRAWINGS 20264, 20266, 20267 & 20269 THRU 20275.
3. ALL LINES, EQUIPMENT, COMPONENTS AND INSTRUMENTS ARE SAFETY CLASS NNS, UNLESS NOTED OTHERWISE.
4. △ INDICATES REVISION LEVEL.
5. DELETED
6. DELETED
7. VALVE 928 TO BE NORMALLY CLOSED DURING PERIODS OF FREEZING TEMP. HOSE RACK 31 IS DRY STANDPIPE DURING THESE PERIODS.
8. VENTS, DRAINS & INSTRUMENT TAPS QR BOUNDARY ARE AT THE DOWNSTREAM END OF THE OUTER ISOLATION VALVE.
9. CONNECTION FOR EMERGENCY MAKE-UP TO CST USING TEMPORARY HOSE (CO-20426 G-7)

REV	DATE	DSGN	CHKD	CE	DESCRIPTION
15	3/16/06	BCS	JW	DMQ	INCORP DCR 99-13 DCN-00
14	7/27/00	BCS	MPW	HWM	INCORP DCR 98-005 DCN-07
13	3/3/00	BCS	MPW	MKC	PARTIAL INCORP DCR 98-005 DCN-00, 04, 06
12	11/4/98	MPW	BCS	MAP	INCORP DCR 96-25 DCN 02
11	6/2/98	DRL	MPW	DWS	INCORP MMOD 96-550 DCN-02
10	5/27/97	MRB	DWS	RRB	INCORP DCR 96-25 DCN 0
9	3/11/94	MRB	BCL	DJM	INCORP MMOD 92-553 CA01
8	4/15/93	BCL	MRB	GRM	INCORP MMOD 92-576 CA0
7	4/20/92	MRB	DWS	RRB	INCORP MMOD 91-515 CA0
6	4/3/90	MRB	APL	PJT	INCORP. DRR 90-32 REV 0 & MADE MINOR DRAFTING ENHANCEMENTS
5	1/25/89	GPM	MRB	ERT	INCORP DCR 88-004 CA01
4	8/20/87	GPM	MPW	EAT	DELETED: MITO REF DWG REVISED: LINE CONT., NOTE 3, ROOM TITLE, VLV NO. & LABLE ADDED QR BOUNDARIES, DETAIL "A" NOTE 8, ROOM TITLES, CHANGE ITEMS 2 & 3, PUMP DATA, CONT COORD.
3	12/30/86	MAP	WRD	DCM	ADDED NOTES 6 & 7., REVISED CONT. REFERENCES, ADDED BLDG. BOUNDARY. REVISED PIPING AND ADDED BUILDING BOUNDRY INFO PER UE&C P&ID AND PIPING ERECTION ISO'S AND DRAWING LOCATION COORD.REVISED VALVE NO. V849 TO V848 WAS IN ERROR
2	9/2/86	DWS	BCL	RRC	APPROVED CHANGE ITEM NO.3,4,5 & 6 PER NEW UE & C REF. DWG REV. UPDATE REF DWG REVISION & REVISED DWG. ACCORDINGLY INCORP. ECA 06/802872A
1	1/22/86	WES	DWS	EWD	ISSUED FOR OPERATIONS GENERAL REVISIONS AND INCORP. ECA 06/107489C, 19/17630 & 74/105803A
0	10/16/84	CB	JNM	PEF	ISSUED FOR FIELD VERIFICATION

REF. DRAWING NO.	REV	TITLE
9763-F-604146	10	FIRE PROTECTION DIAGRAM - STAND PIPE

FPL ENERGY Seabrook Station

FIRE PROTECTION STANDPIPE DETAIL

PID- 1-FP-B20268

PID- 1-DG-B20456

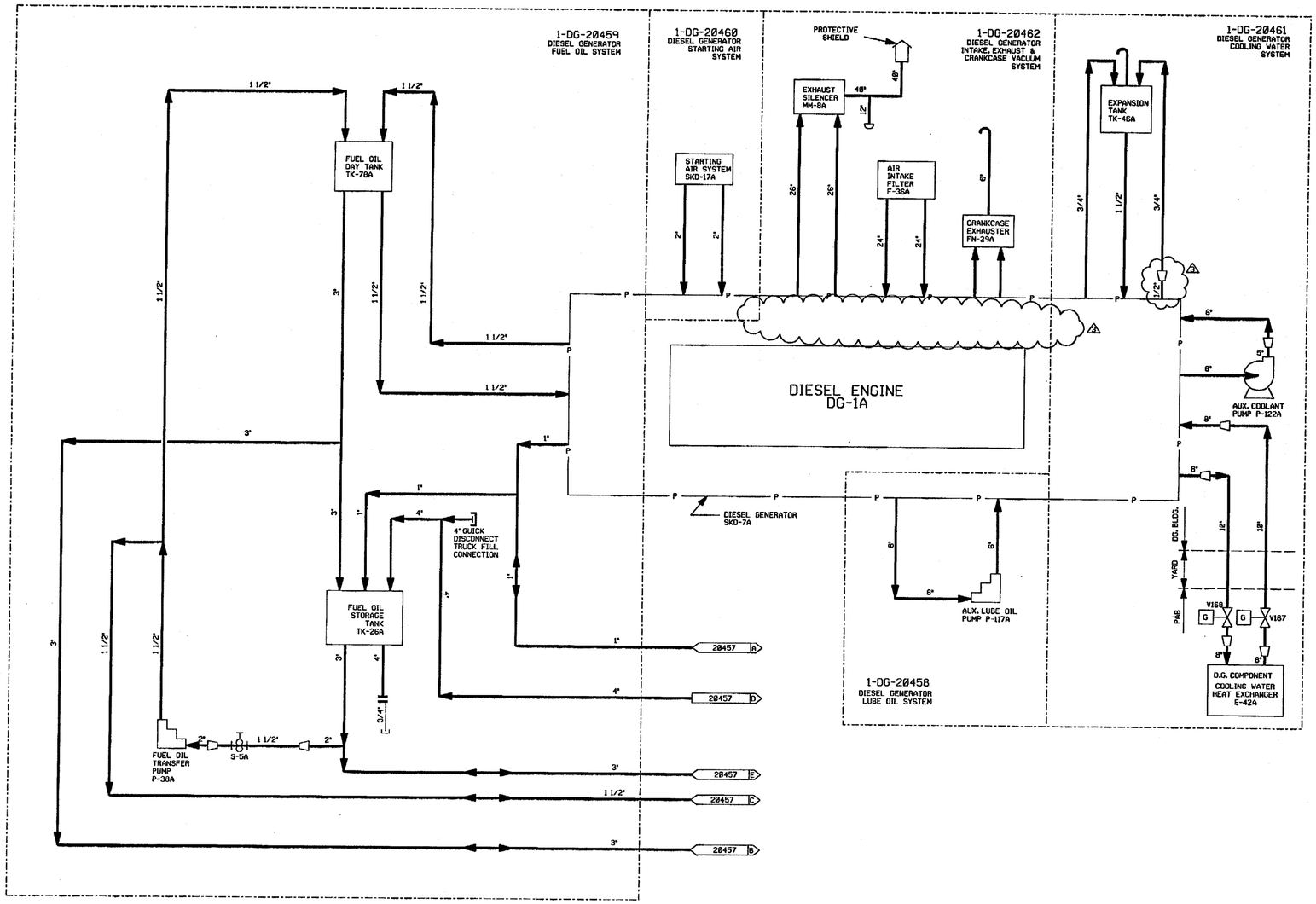

NOTES:

1. WORK THIS DRAWING WITH DRAWINGS 20457, 20458, 20459, 20460, 20461 & 20462.
2. ALL LINES, EQUIPMENT, COMPONENTS, AND INSTRUMENTATION HAVE SYSTEM PREFIX DG, UNLESS NOTED OTHERWISE.
3. △-INDICATES REVISION LEVEL.

REV	DATE	DSGN	CHKD	CE	DESCRIPTION
3	10/25/03	BCS	JM	PEB	ADMINISTRATIVE UPDATE
2	1/27/97	WDS	WRD	VWS	INCORP. ECA 99/112651B, REVISED REF DWG REVISIONS. DELETED "B" FROM DWG NO'S IN NOTE 1, REVISED PER LATEST SYS. DWGS.
1	2/27/96	WAL	JDM	WFD	ISSUED FOR OPERATIONS INCORP. ECA 99/112651A
0	06/29/84	MNS	RSL	WFD	ISSUED FOR FIELD VERIFICATION

REF. DRAWING NO.	REV	TITLE
9763-F-202103	14	D.G. COOLING WATER -P&ID
9763-F-202101	13	D.G. AIR SYSTEM P&ID
9763-F-202102	16	D.G. FUEL & LUBE OIL P&ID

FPL ENERGY Seabrook Station

DIESEL GENERATOR TRAIN "A" OVERVIEW

PID- 1-DG-B20456

10/27/03

PID- 1-DG-B20457

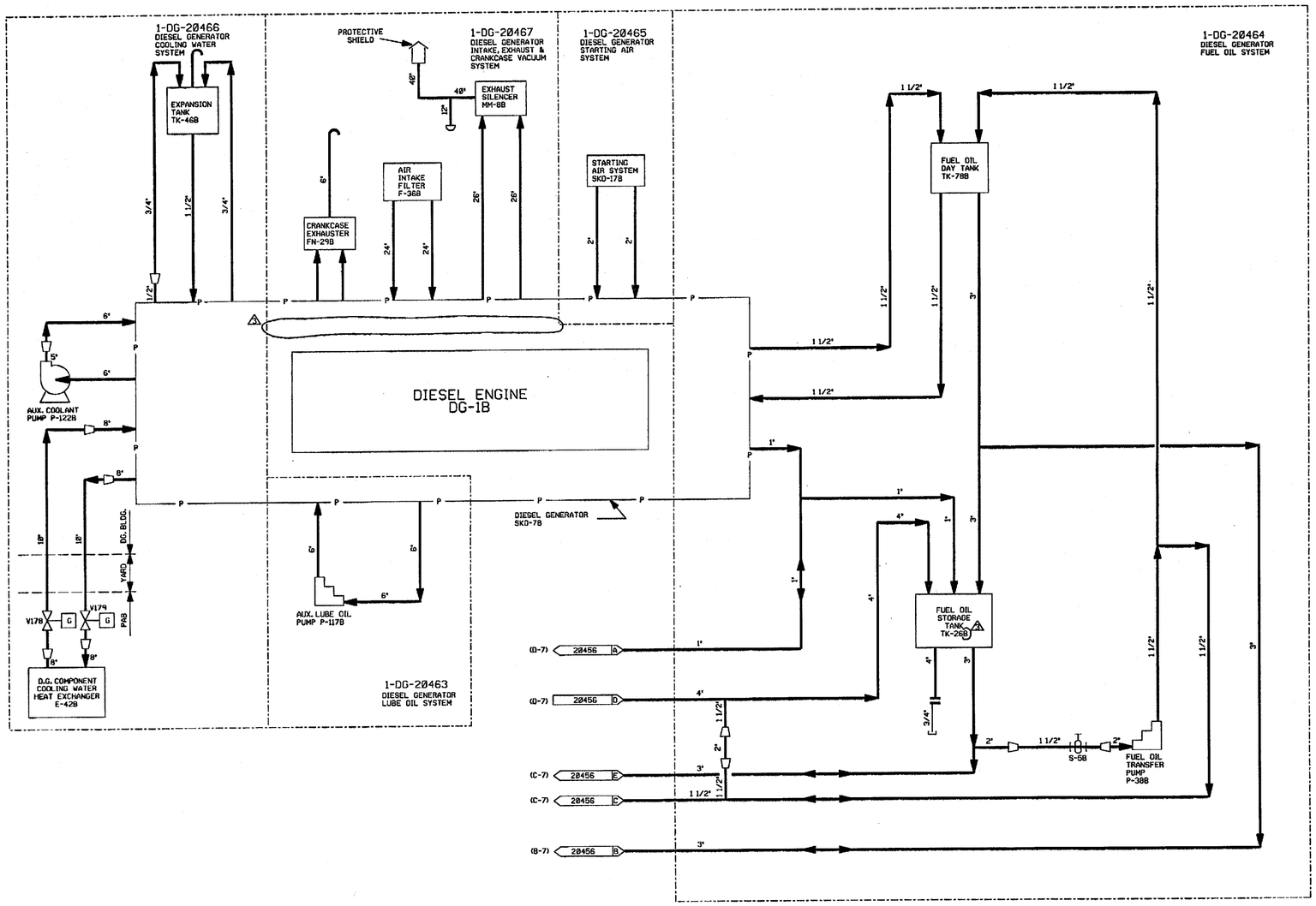

NOTES:

1. WORK THIS DRAWING WITH DRAWINGS 28456, 28463, 28464, 28465, 28466 & 28467.
2. ALL LINES, EQUIPMENT, COMPONENTS, AND INSTRUMENTATION HAVE SYSTEM PREFIX DG, UNLESS NOTED OTHERWISE.
3. △ -INDICATES REVISION LEVEL.

REV	DATE	DSGN	CHKD	CE	DESCRIPTION
3	10/28/03	JN	BCS	BCB	ADMINISTRATIVE UPDATE
2	1/27/87	WDS	WRD	VWS	DELETED ECA'S UNDER INCOMPLETE ITEMS. REVISED PER LATEST SYSTEM DRAWINGS.
1	2/27/86	WAL	JDM	WFD	ISSUED FOR OPERATIONS
0	06/29/84	MNS	RSL	WFD	ISSUED FOR FIELD VERIFICATION

REF. DRAWING NO.	REV	TITLE
9763-F-202103	15	D.G. COOLING WATER -P&ID
9763-F-202101	13	D.G. AIR SYSTEM P&ID
9763-F-202102	16	D.G. FUEL & LUBE OIL P&ID

FPL ENERGY Seabrook Station

DIESEL GENERATOR TRAIN "B" OVERVIEW

PID- 1-DG-B20457

10/27/03

NHY PID:28459.DGN:01

PID- 1-DG-B20459

FOR P&ID REFERENCE DRAWINGS, SYMBOLS AND ABBREVIATIONS REFER TO DRAWINGS P&ID - LEGEND 1 AND P&ID - LEGEND 2

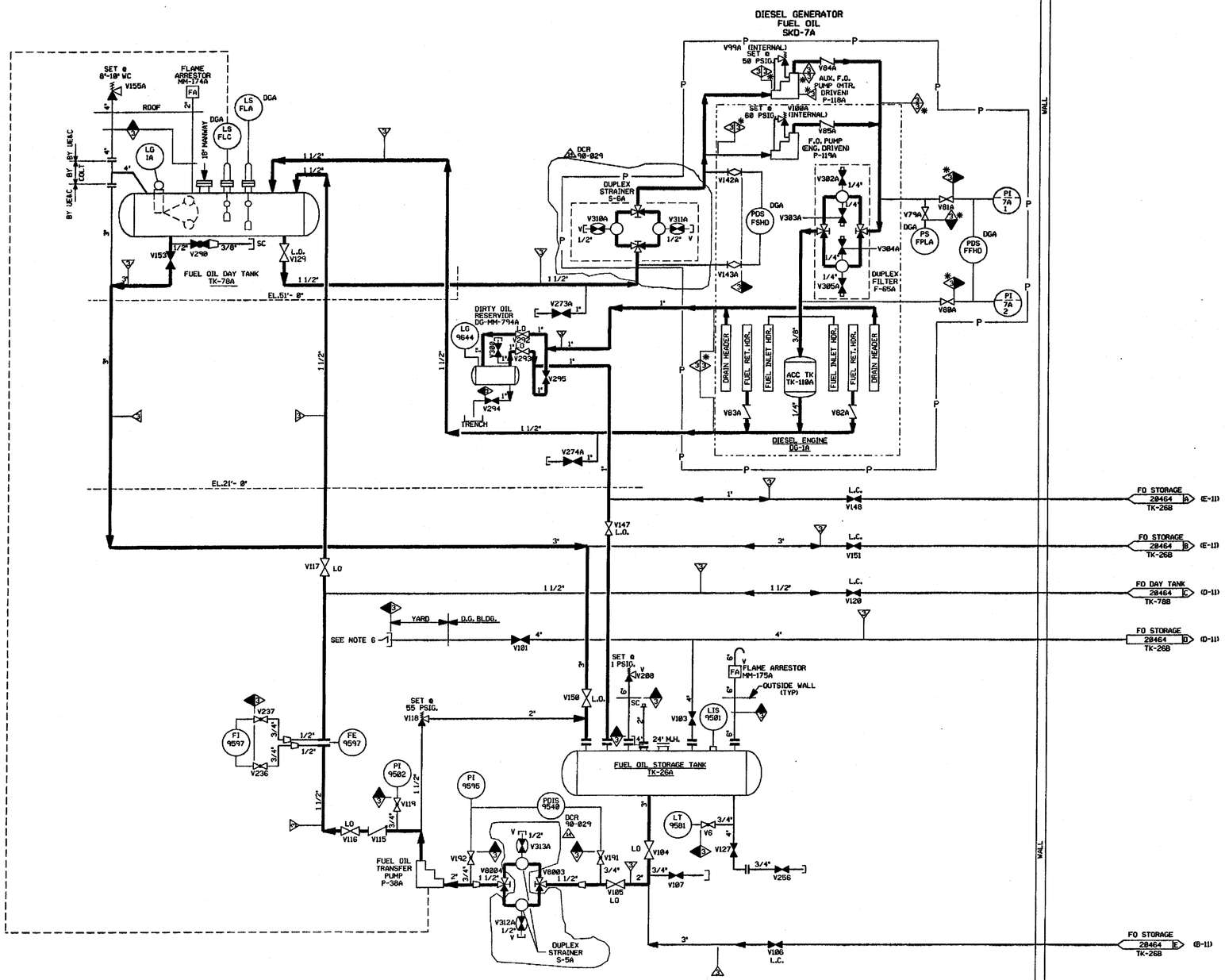

PORTIONS OF THIS DRAWING ARE

NUCLEAR SAFETY RELATED

NOTES:

1. WORK THIS DRAWING WITH DRAWINGS 28456, 28457, 28458, 28460, 28461, 28462 & 28464.
2. ALL LINES, EQUIPMENT, COMPONENTS AND INSTRUMENTATION HAVE SYSTEM PREFIX DG, UNLESS NOTED OTHERWISE.
3. DELETED.
4. DELETED.
5. △-INDICATES REVISION LEVEL.
6. NPT QUICK DISCONNECT FITTING PROVIDED BY OWNER FOR DIESEL FUEL CONNECTION.
7. VENT, DRAINS AND TEST CONN. SAFETY CLASS AND CODE BREAKS ARE AT THE DOWNSTREAM END OF THE OUTER ISOLATION VALVE PER I-NHY-805111, UNLESS NOTED OTHERWISE.

REV	DATE	DSGN	DRWN	CHKD	CDE	SES	DESCRIPTION
14	8/8/00	BCS	—	mfw	JWB	mjc	INCORP. DCR 98-829 DCN-8
13	11/1/95	MPW	—	BCS	DWS	VWS	INCORP. MMOD 96-550 CA8
12	11/1/95	BCL	—	MPW	MRB	RSG	INCORP. DCR 94-12 CA-8, 01 & MMOD 95-503 CA-8
11	5/27/94	MRB	—	JCM	BCL	GRM	INCORP. MMOD 92-546 CA8 & DCR 98-829 CA8
10	7/23/92	MRB	—	BCL	DWS	DJM	INCORP. DCR 98-813 CA5
9	6/26/92	MRB	—	BCL	MPW	DJM	PARTIAL INCORP. DCR 98-813 CA8
8	4/28/92	MRB	—	BCL	DWS	RRB	INCORP. MMOD 91-515 CA8
7	8/24/91	MRB	FCB	JM	GPM	RRC	INCORP. DCR 98-49 CA8 ADDED SYSTEM & TRAIN DESIGNATION PER I-NHY-506397 & 506399
6	8/14/89	MRB	FCB	APL	BCL	MAC	INCORP DCR 89-33 CA 03 DELETED: CODE BREAKS PER NOTE 7.
5	1/7/87	MRJ	OPO	WRD	MPW	RRC	CORRECTED TAG NO. OF TK-26 REVISED DUPLEX STRAINER ARRT. PER NCR 82-10056, REVD CODE FLAG PER SSP-86-076, CORRECTED DRAFTING ERROR. ADDED REF. DWGS.
4	10/3/86	MAP	TAK	JDM	VNK	RRC	ADDED CONT. COORDINATES. REVISED PER PIPING ERECTION ISO'S ADDED CODE BREAKS, REVISED LG-1A IN ERROR, DELETED "P" DESIGNATION IN NOTE 1 INCORP. NCR 73/35A
3	5/24/86	WAL	JDM	BCL	JMS	RRC	INCORP ECA'S 99/112651/8 & 88/110173B
2	2/27/86	WAL	MRB	JDM	RAC	WFD	ISSUED FOR OPERATIONS & INCORP. ECA'S 99/112651A, 88/111331A
1	11/24/84	DWS	MRB	JNM	DHF	PEF	CODE BREAKS ADDED
0	06/29/84	MNS	RI	JNM	DHF	WFD	ISSUED FOR FIELD VERIFICATION

REF. DRAWING NO.	REV	TITLE
FP 20669	9	EMERG. DIESEL GEN. JACKET WTR. EXP. TANK
FP 21070	9	EMERG. DIESEL GEN. FUEL OIL DAY TANK
9763-F-282102	16	DG FUEL & LUBE OIL P&I DIAGRAM

North Atlantic Energy Service Corporation

SEABROOK STATION

DIESEL GENERATOR FUEL OIL SYSTEM TRAIN "A" DETAIL

PID- 1-DG-B20459

08/31/00

PID- 1-DG-B20464

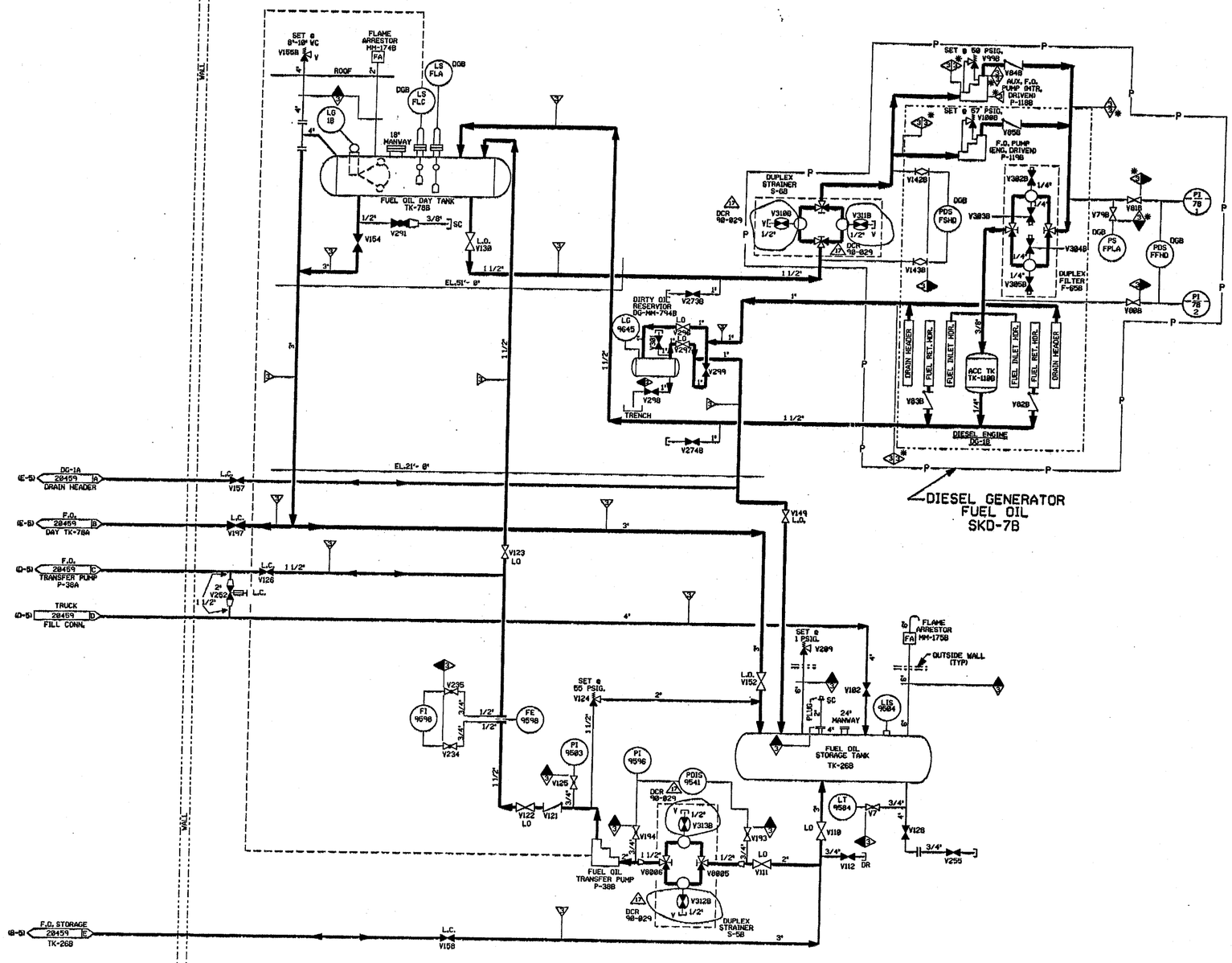

FOR P&ID REFERENCE DRAWINGS, SYMBOLS AND ABBREVIATIONS REFER TO DRAWINGS P&ID-LEGEND 1 AND P&ID LEGEND 2.

PORTIONS OF THIS DRAWING ARE
NUCLEAR SAFETY RELATED

NOTES:
1. WORK THIS DRAWING WITH DRAWINGS 28456, 28457, 28458, 28463, 28465, 28466 & 28467.
2. ALL LINES, EQUIPMENT, COMPONENTS AND INSTRUMENTATION HAVE SYSTEM PREFIX DG, UNLESS NOTED OTHERWISE.
3. DELETED.
4. DELETED
5. △ INDICATES REVISION LEVEL.
6. VENT, DRAINS AND TEST CONN. SAFETY CLASS AND CODE BREAKS ARE AT THE DOWNSTREAM END OF THE OUTER ISOLATION VALVE PER 1-NHY-6805111, UNLESS NOTED OTHERWISE.

REV	DATE	DSGN	DRWN	CHKD	CDE	SES	DESCRIPTION
17	7/21/00	BCS	—	MPW	DWS	VWS	INCORP. DCR 98-829 DCN-08
16	10/30/98	MPW	—	BCS	DWS	VWS	INCORP. MMOD 96-558 CA8
15	11/1/95	BCL	—	MPW	MRB	RSG	INCORP. DCR 94-12 CA-6, 81 & MMOD 95-583 CA-8
14	5/9/94	MPW	—	BCL	DWS	GRM	BACKED OUT DCR 98-829
13	5/8/94	MRB	—	MPW	VNF	RRB	INCORP. MMOD 92-546 CA8 & DCR 98-0824 CA8
12	7/5/92	MRB	—	MPW	BCL	DJH	INCORP. DCR 98-813 CA5
11	5/26/92	MRB	—	BCL	MPW	DJH	PARTIAL INCORP. DCR 98-813 CA8
10	4/13/92	MRB	—	DWS	BCL	JEV	INCORP. MMOD-91-515 CA8
9	9/6/91	MRB	FCB	JM	GPM	RRC	INCORP. DCR 98-49 CA8
8	6/28/91	MRB	FCB	DSB	GPM	APL	REISSUED TO CORRECT ADMINISTRATIVE ERROR
7	11/28/89	MRB	RHC	APL	PAL	GRM	INCORPORATED DCR 89-33 CA #3
6	6/14/88	GPM	RHC	APL	BCL	DJH	INCORP. 87-319 REVISED: NOTE 6 DELETED: NNS-1 CLASS BOUNDARY
5	12/22/86	MRJ	CPQ	WRQ	BCL	RRC	CORRECTED TAG NO. OF TK-26. REVISED DUPLEX STRAINER ARRGT PER MER 86-1866B, REVISED CODE FLAG PER SBP-86-874.
4	10/10/86	PAL	DWS	BCL	VNK	RRC	REVISED PER ECA 99/1081018, ECA 88/1181738, NCR 73-35A, ADDED NOTE 6, DWG CODE LOC. FOREIGN PRINTS TO REV 16, DCK. THE FOLLOWING CHANGES MADE PER UEAC P&ID, ADDED CLASS 3 FLAG TO 4" LINE, CLASS 3 NO TO TRIANGLE AND LINE NO. OUTSIDE WALL WAS SHOWN IN ERROR, V205 CORRECTED FROM V225, FLANGES DELETED FROM SKIDS.
3	6/23/86	WAL	MRB	VNK	JMCS	RRC	INCORPORATED ECA 88/1181738 & UPDATED PER LATEST P&ID.
2	2/27/86	WAL	MRB	JDM	RAC	WFD	ISSUED FOR OPERATIONS & INCORP. ECA 88/1113BA
1	11/24/84	DWS	MRB	JNH	DMF	PEF	CODE BREAKS ADDED
0	06/24/84	MNS	RI	RSL	DMF	WFD	ISSUED FOR FIELD VERIFICATION

REF. DRAWING NO.	REV	TITLE
FP 21070	9	EMERG DIESEL GEN FUEL OIL DAY TANK
FP 20689	9	EMERG DIESEL GEN JACKET WTR EXP TANK
9763-F-202102	16	D.G. FUEL & LUBE OIL P&I DIAGRAM

North Atlantic Energy Service Corporation

SEABROOK STATION

DIESEL GENERATOR FUEL OIL SYSTEM TRAIN "B" DETAIL

PID- 1-DG-B20464

07/20/00

PID- 1-DG-B20461

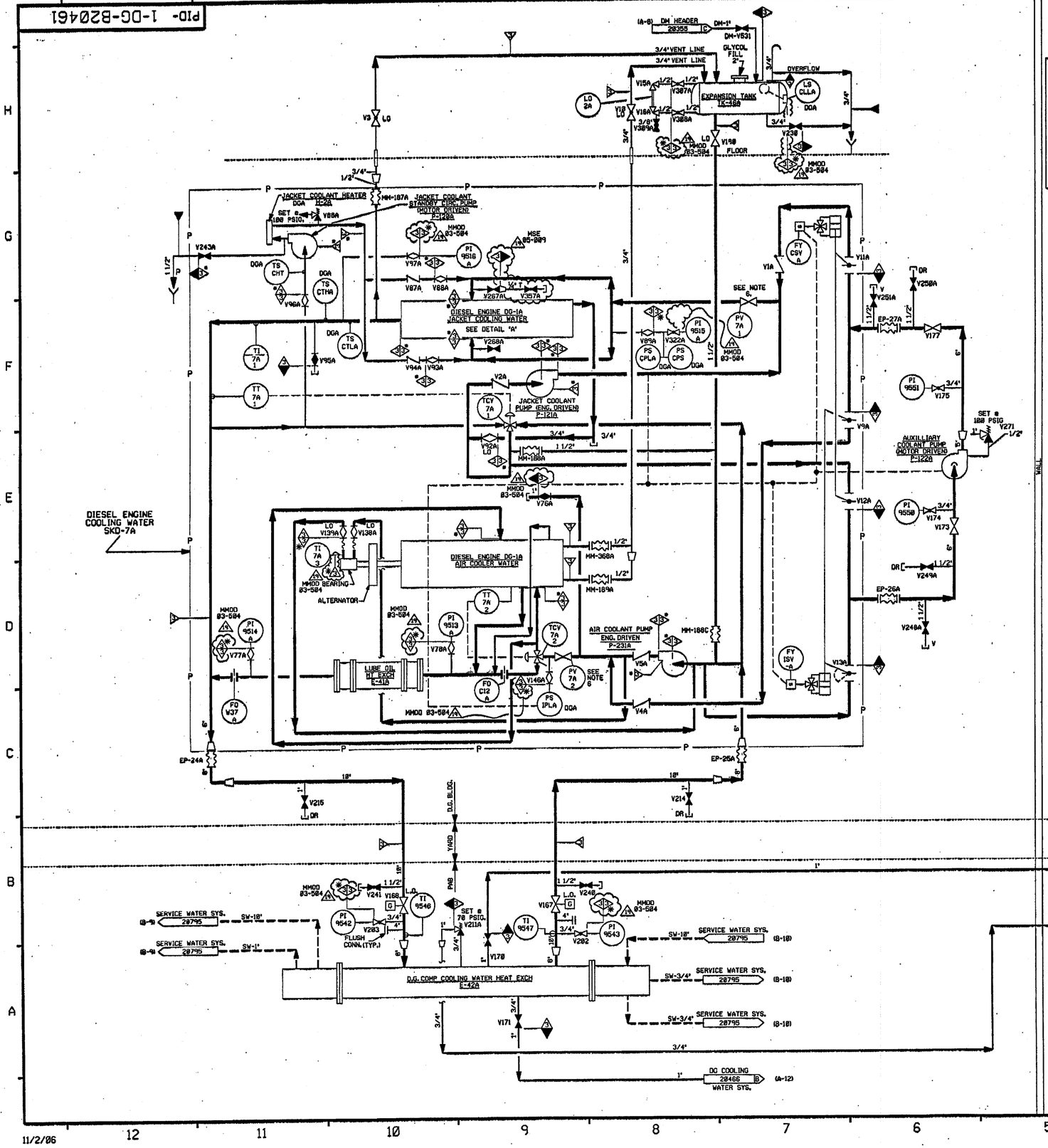

FOR P&ID REFERENCE DRAWINGS, SYMBOLS AND ABBREVIATIONS REFER TO DRAWINGS P&ID - LEGEND 1 AND P&ID - LEGEND 2

NOTES:

1. WORK THIS DRAWING WITH DRAWINGS 28456, 28457, 28458, 28459, 28468, 28462 & 28466.
2. ALL LINES, EQUIPMENT, COMPONENTS AND INSTRUMENTATION HAVE SYSTEM PREFIX DG, UNLESS NOTED OTHERWISE.
3. DELETED
4. VENT & DRAIN CODE AND SAFETY CLASS BREAKS ARE AT THE DOWNSTREAM END OF THE OUTER ISOLATION VALVE PER 1-NHY-885111, UNLESS NOTED OTHERWISE.
5. △ INDICATES REVISION LEVEL.
6. THIS VALVE HAS BEEN STAKED IN A PRE-DETERMINED THROTTLED POSITION.

PORTIONS OF THIS DRAWING ARE

NUCLEAR SAFETY RELATED

REV	DATE	DSGN	CHKD	CE	DESCRIPTION
19	11-14-06	JM	BCS	KBB	INCORP MMOD 83-584 DCN 08 & MSE 85-889 REV 08
18	10/15/03	BCS	MPW	RRB	INCORP MMOD 88-531 DCN-8
17	5/7/02	JM	MPW	DJM	INCORP. MSE 81-8889 REV 8 AND CR 98-13298
16	11/19/00	BCS	MPW	SPF	INCORP DCR 98-8826 DCN-08
15	6/2/98	DRL	BCS	VWS	INCORP MMOD 97-521 DCN 08
14	10/30/95	BCL	MPW	GRM	INCORP DCR 94812 CA*8, 81 & REINCORP. NCR 74/25384
13	12/9/94	DWS	BCL	MHD	INCORP MMOD 938545 CA*8
12	5/27/94	BCL	MPW	GRM	INCORP MMOD 91-586 CA-8 & MMOD 92-546 CA-8
11	10/22/93	MRB	BCL	GRM	INCORP MMOD 92-556 CA8 AND PARTIAL INCORP MMOD 92-546 CA8
10	4/23/92	MRB	BCL	RRB	INCORP MMOD'S 91-515 CA8 & 91-522 CA8
9	10/29/89	MRB	JM	BCL	INCORP MMOD 90-581 CA08
8	12/2/88	MRB	GPM	GRM	INCORPORATED DCR 88-122, CA8 REVISED PIPING TO CLARIFY DUPLICATION OF ASSOCIATED SYSTEMS & INTERFACES, DELETED CLASS BREAK AND SYSTEM CLASS DESIGNATION.
7	8/31/88	GPM	APL	GRM	INCORP. DCR 88-25 CA2 REVISED NOTE 4 DELETED, NNS-1 CL BOUNDARY
6	3/8/87	MRJ	GPO	RRC	CORRECTED DRAFTING ERROR BY ADDING VALVE TAG NO.
5	2/18/87	JDM	MPW	VWS	REVISED SAFETY CLASS, PER MEMO SBP-86-676 YAEC. REVISED CONFIG. PER FP 28586 & FP 22674, CORRECTED TAG NUMBER OF TI-9546 PER DISPOSITION OF CAR 86/22A.
4	10/10/86	PAL	BCL	RRC	CHANGED TT-9545 TO TI-9547 PER CAR 86/22A, CORRECTED CLASS BREAK SHOWN IN, DGA ADDED PER UEAC P&ID, ADDED ADDED Y271 & LINE NO. PER NCR 84/3828, RELOCATED FI-9542 & TI-9547 PER PIPING ERECTION ISO., ADDED CHANGE ITEM 1, PER CAR 82/22A, ADDED FOREIGN PRINT NOTE 5, DWG. COORDINATE LOCATIONS & NOTE 5.
3	6/23/86	JDM/ BCL	VNK	RRC	REVISE SAFETY CLASS-ADD SPEC BREAKS REVISE VALVE POSITION INCORP. NCR-84/13828
2	2/27/86	WAL	JDM	WFD	ISSUED FOR OPERATIONS & INCORP. ECA 19/1888428
1	11/29/84	DWS	JNM	PEF	CODE BREAKS ADDED
0	06/29/84	MNS	RSL	WFD	ISSUED FOR FIELD VERIFICATION

REF. DRAWING NO.	REV	TITLE
FP 21175	4	DG COOLANT BACKUP JW PMP. & MTR. OUTLINE
FP 20699	9	EMERG. DG SKID GEN. ARRGM'NT
FP 21069	7	EFWP PUMP ASSEMBLY
9763-F-282193	14	DIESEL GENERATOR COOLING WATER - P&ID

FPL ENERGY Seabrook Station

DIESEL GENERATOR COOLING WATER SYSTEM TRAIN 'A' DETAIL

PID- 1-DG-B20461

11/2/06

PID- 1-DG-B20466

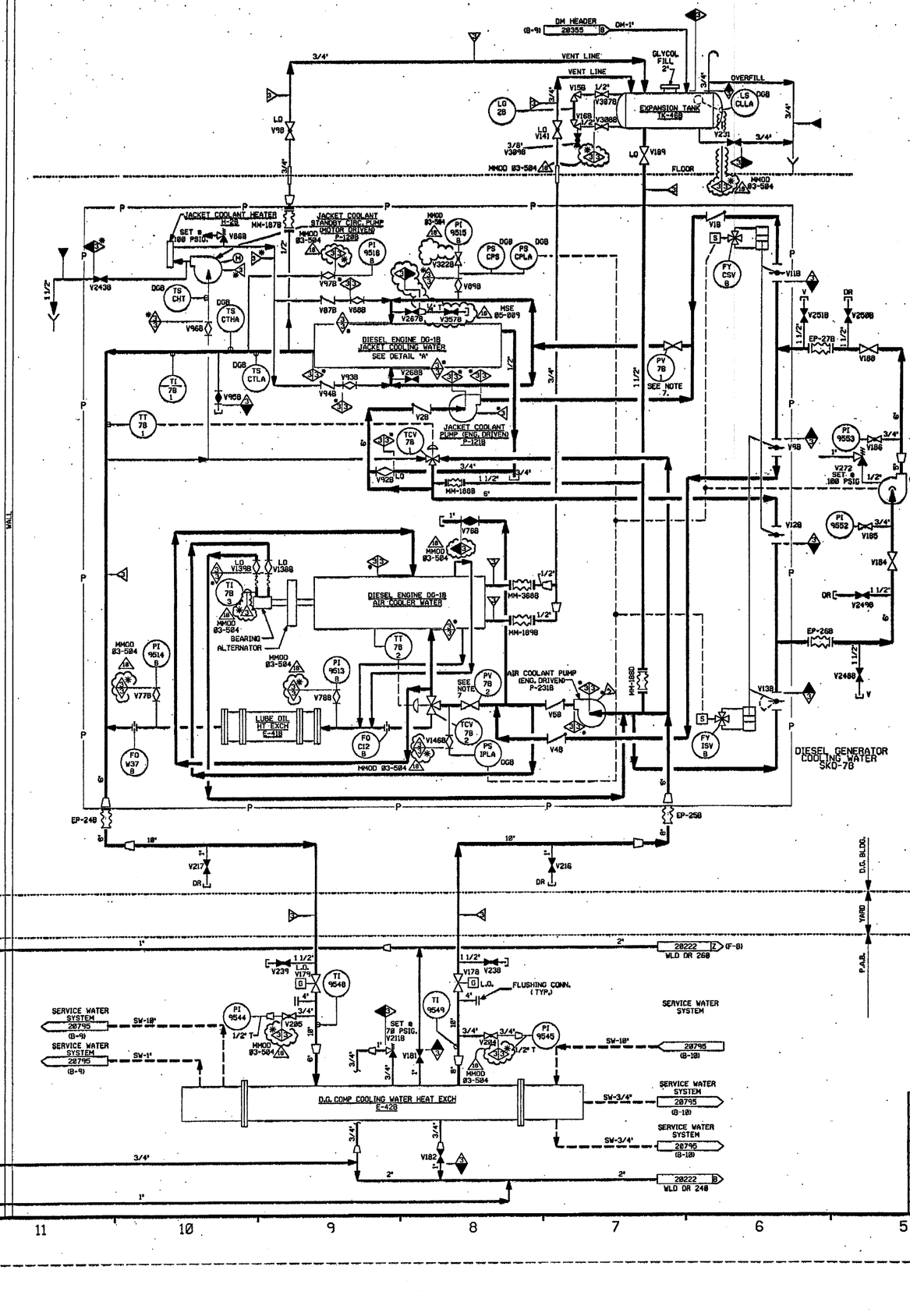

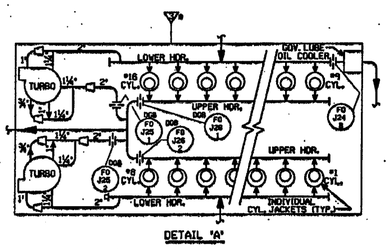

DETAIL "A"

FOR P&ID REFERENCE DRAWINGS, SYMBOLS AND ABBREVIATIONS REFER TO DRAWINGS P&ID - LEGEND 1 AND P&ID - LEGEND 2

NOTES:

1. WORK THIS DRAWING WITH DRAWINGS 28456, 28457, 28461, 28463, 28464, 28465 & 28467.
2. ALL LINES, EQUIPMENT, COMPONENTS AND INSTRUMENTATION HAVE SYSTEM PREFIX DG.
3. DELETED
4. VENT, DRAIN & TEST CONN. CODE AND SAFETY CLASS BREAKS ARE AT THE DOWN STREAM END OF THE OUTER ISOLATION VALVE PER 1-HHY-005111, UNLESS NOTED OTHERWISE.
5. △ INDICATES REVISION LEVEL.
6. DELETED
7. THIS VALVE HAS BEEN STAKED IN A PRE-DETERMINED THROTTLED POSITION.

PORTIONS OF THIS DRAWING ARE
NUCLEAR SAFETY RELATED

REV	DATE	DSGN	CHKD	CE	DESCRIPTION
18	11-16-06	JH	BCS	RZB	INCORP MMOD 03-584 DCN 08 & MSE 05-089 REV 08
17	5/18/02	JH	MPW	MKC	INCORP MMOD 00-0531 DCN*08
16	9/25/01	BCS	MPW	MKC	INCORP MSE 01-089, REV. 0
15	12/1/00	MPW	BCS	SPF	INCORP DCR 00-0026 DCN 00
14	6/2/98	DRL	BCS	VWS	INCORP MMOD 97-521 DCN 00
13	10/30/95	BCL	MPW	GRM	INCORP DCR 94012 CA*0 & 01, & INCORP. NCR 74/25384

FPL ENERGY Seabrook Station

DIESEL GENERATOR COOLING WATER SYSTEM TRAIN "B" DETAIL

PID- 1-DG-B20466

REF. DRAWING NO.	REV	TITLE
9763-F-282183	15	DIESEL GENERATOR COOLING WATER P&ID

11/03/06

PID- 1-DG-B20460

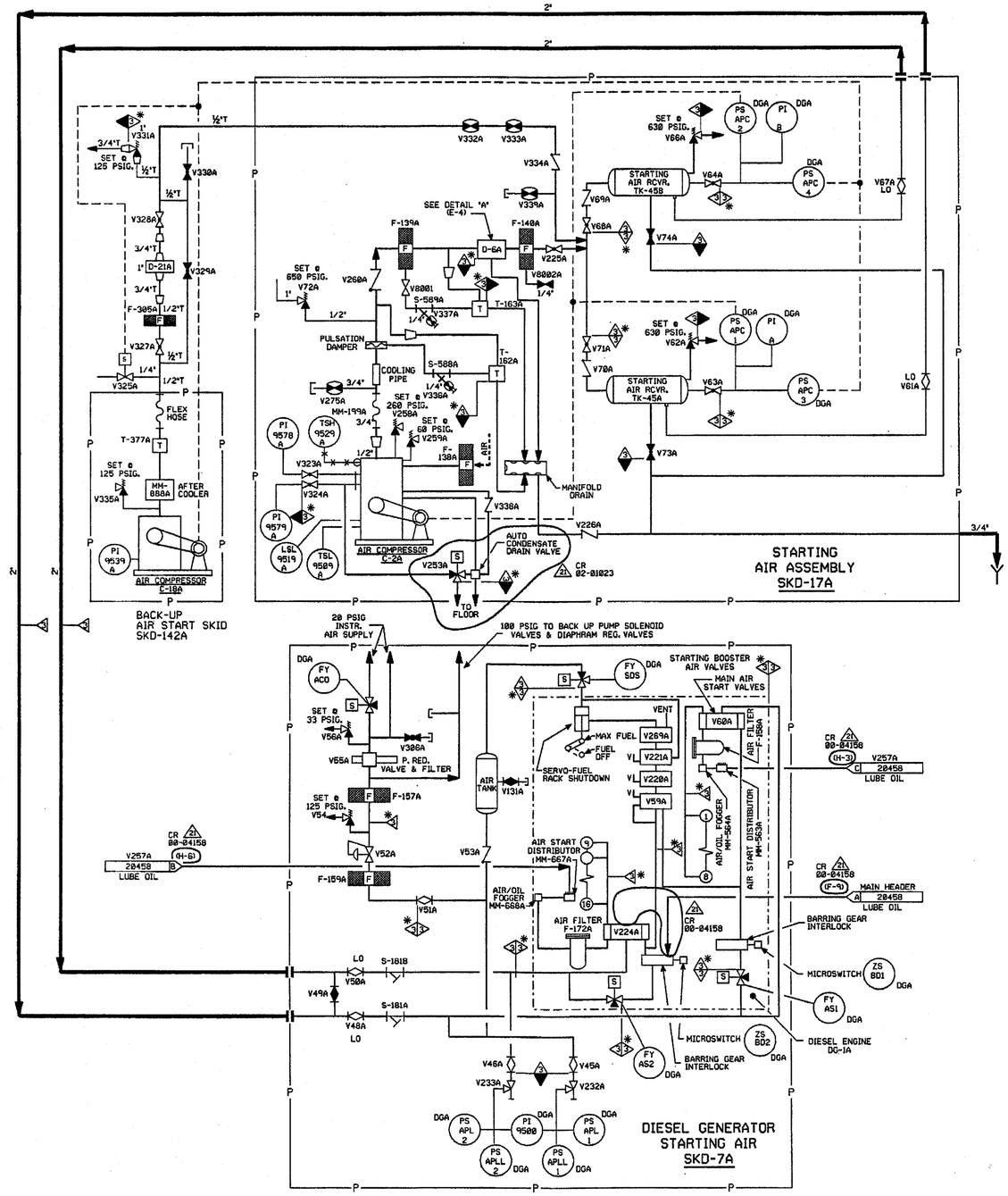

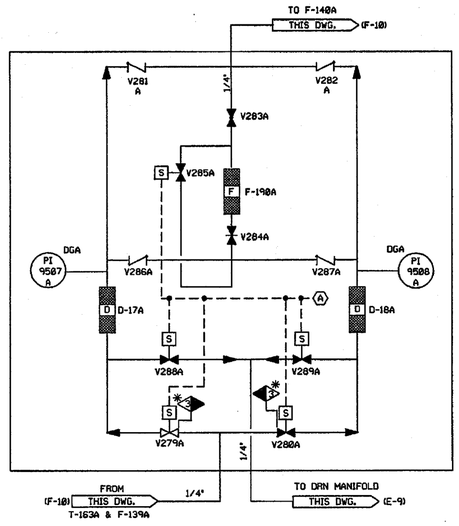

FOR P&ID REFERENCE DRAWINGS, SYMBOLS AND ABBREVIATIONS REFER TO DRAWINGS P&ID - LEGEND 1 AND P&ID - LEGEND 2

NOTES:

1. WORK THIS DRAWING WITH DRAWINGS 28456, 28457, 28458, 28459, 28461, & 28462.
2. ALL LINES, EQUIPMENT, COMPONENTS AND INSTRUMENTATION HAVE SYSTEM PREFIX DG, UNLESS NOTED OTHERWISE.
3. DELETED
4. △-INDICATES REVISION LEVEL.
5. VENTS, DRAINS AND TEST CONN. CODE AND SAFETY CLASS BREAKS ARE AT THE DOWN STREAM END OF THE OUTER ISOLATION VALVE PER 1-NHY-885111, UNLESS NOTED OTHERWISE.
6. INSTRUMENT REFERENCE
   (A) TO CONTROL PANEL ON SKD-17A, FP-22574.

PORTIONS OF THIS DRAWING ARE

NUCLEAR SAFETY RELATED

REV	DATE	DSGN	CHKD	CE	DESCRIPTION
21	6/9/03	JM	MPW	MKC	INCORP CR 00-04158 REV 00 & CR 02-01823 REV 00
20	5/7/02	JM	MPW	MKC	INCORP MMOD 01-533 DCN*00
19	8/12/00	BCS	DWS	MKC	INCORP DCR 97-0045 DCN-08
18	10/7/99	BCS	MPW	MKC	INCORP DCR 97-0045 DCN-05, 06
17	7/14/99	BCS	MPW	DJM	INCORP MMOD 96-566 DCN-00, DCR 97-45 DCN-00, 02
16	6/19/97	MPW	DWS	RSG	INCORP DCR 94-44 CA*0, 8, 9 & 14
15	4/2/96	MPW	DWS	GRM	INCORP DCR 94-12 CA*0 & 1
14	5/30/95	DWS	MPW	JHR	INCORP MMOD 940572 CA*0
13	12/8/94	DWS	BCL	MHD	INCORP MMOD 938545 CA*0
12	6/1/94	BCL	WDS	GRM	INCORP. DCR 90-29 CA-2
11	5-27-94	BCL	MPW	GRM	INCORP. MMOD 94-586 CA0, 03 & MMOD 92-546 CA-1
10	10-22-93	MRB	BCL	GRM	INCORP. MMOD'S 92-546 CA0, 92-556 CA0
9	9-17-92	DWS	BCL	IW	INCORP DCR 920041 CA*0
8	4-17-92	MRB	BCL	RRB	INCORP. MMOD 91-515 CA0
7	10/5/89	MRB	APL	WFD	INCORP MMOD 89-561 CA 0 REVISED INSTR. TAG PREFIX PER SIS VERIFICATION
6	8/14/89	MRB	APL	MAC	INCORP. DCR 89-33 CA 03 ADDED: VALVES V258A & V259A VERIFIED INSTALLED AND TAGGED AS SHOWN.
5	1/22/87	JDM	PAL	RRC	ADDED TAG NUMBERS & EQUIPMENT I.D., ADDED DCA DESIGNATION TO INSTR. REVISED LOCATION OF FILTER & FOGGER PER F.P.-20291, ADDED LUBE OIL SUPPLY TO PROVIDE MORE SYSTEM DETAIL, REVISED SAFETY CLASS PER MEMO SBF-86-876-INEC.
4	10/3/86	MAP	JDM	RRC	DELETED NOTE 5. INCORP. DR 82/288A, REVISED PER FP *28883, 28699 & PIPING ERECTION ISO'S ADDED VALVE NO'S V8001 & V8002 INCORP. ECA 99/88179A.
3	6/19/86	JDM	DWS	RRC	INCORP NCR 74/35010, ECA 19/882834A
2	2/27/86	WAL	JDM	WFD	ISSUED FOR OPERATING & INCORP. ECA'S 99/1043118 & 99/112515A
1	11/29/84	DWS	JNM	PEF	CODE BREAKS ADDED
0	06/29/84	MNS	RSL	WFD	ISSUED FOR FIELD VERIFICATION

FPL ENERGY Seabrook Station

DIESEL GENERATOR STARTING AIR SYSTEM TRAIN "A" DETAIL

PID- 1-DG-B20460

REF. DRAWING NO.	REV	TITLE
FP-28883	12	EMERG.DIESEL STARTING AIR ASSEMBLY SKD-17A
FP-20699	13	DIESEL GENERATOR STARTING AIR SKD-7A
9763-F-20210I	13	DIESEL GENERATOR-AIR SYSTEM P&ID

05/14/03

PID- 1-DG-B20465

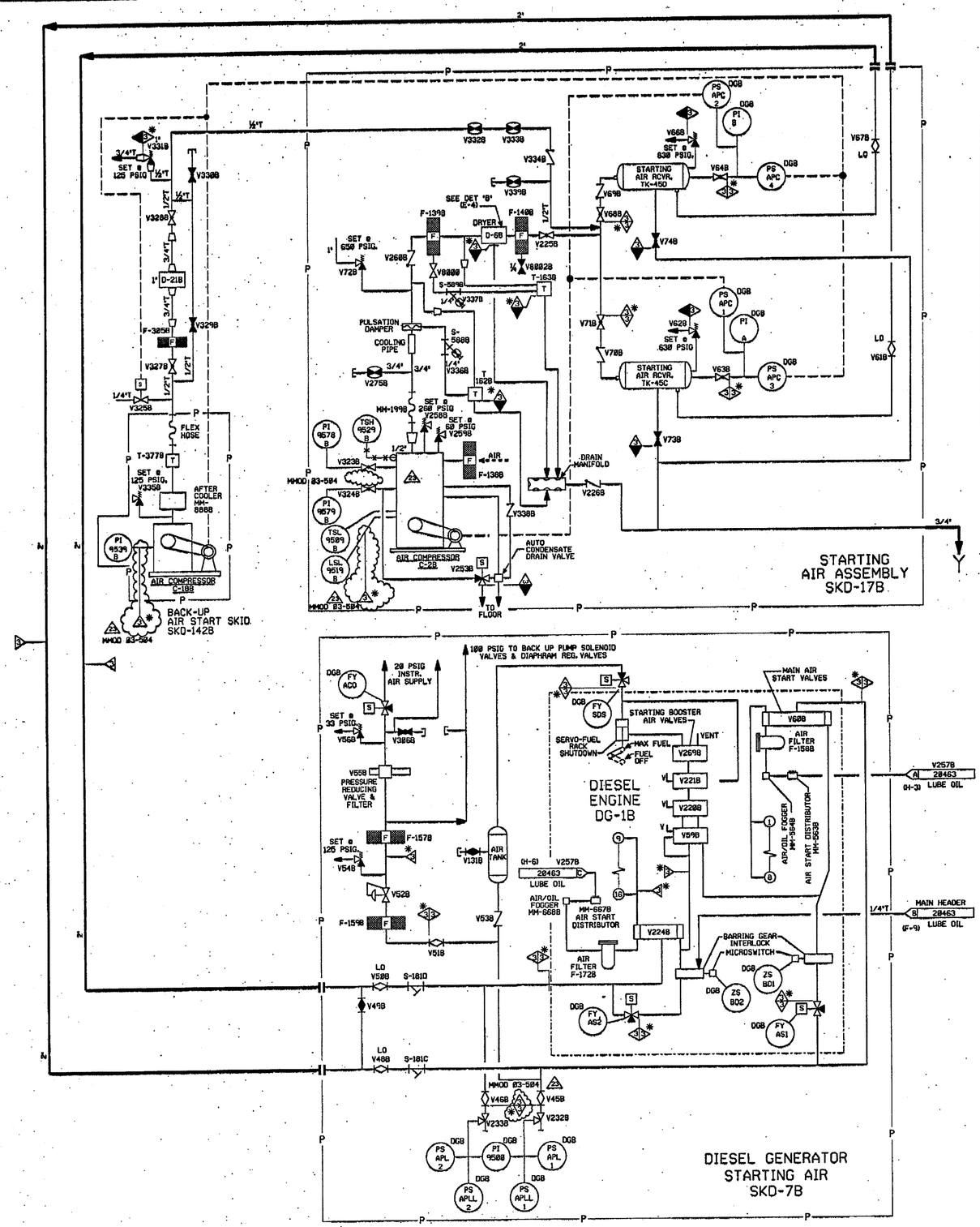

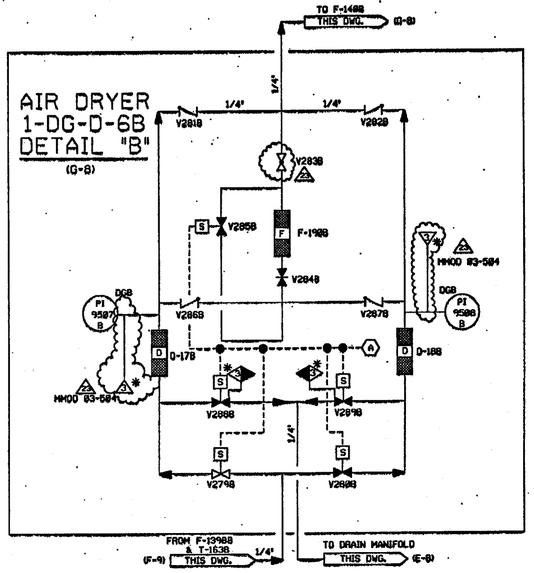

NOTES:

1. WORK THIS DRAWING WITH DRAWINGS 28456, 28457, 28463, 28464, 28466, AND 28467
2. ALL LINES, EQUIPMENT, COMPONENTS AND INSTRUMENTATION HAVE SYSTEM PREFIX DG, UNLESS NOTED OTHERWISE.
3. DELETED
4. △ INDICATES REVISION LEVEL.
5. VENTS, DRAINS AND TEST CONN. CODE AND SAFETY CLASS BREAKS ARE AT THE DOWNSTREAM END OF THE OUTER ISOLATION VALVE PER 1-NHY-885111, UNLESS NOTED OTHERWISE.
6. INSTRUMENT REFERENCES:
   (A) TO CONTROL PANEL ON SKD-17B FP-22575

PORTIONS OF THIS DRAWING ARE
NUCLEAR SAFETY RELATED

REV	DATE	DSGN	CHKD	CE	DESCRIPTION
23	1/30/06	BCS	JWL	RAB	INCORP MMOD 03-584 DCN 09
22	12/31/03	JM	BCS	RAB	INCORP CR 00-04158 REV 00 & CR 02-01823 REV 00
21	12/19/02	JM	BCS	MKC	INCORP CR 02-12483 REV 00
20	8/21/02	BCS	JM	MKC	INCORP DCR 97-0045 DCN-00
19	5/16/02	MPW	JM	MKC	INCORP MMOD 01-533 DCN 00
18	11-17-99	BCS	MPW	MKC	INCORP DCR 97-045 DCN-06
17	8-26-99	BCS	MPW	WFZ	INCORP MMOD 96-566 DCN-00, DCR 97-45 DCN-8,2,5
16	5-26-97	MPW	DWS	WFZ	INCORP DCR 94-44 DCN-8, 8, 9 & 14
15	4-2-96	BCS	DWS	GRM	INCORP DCR 94-12 CA-8, 81
14	5-15-95	BCL	MPW	JPS	INCORP MMOD 94-572 CA*8
13	12-9-94	DWS	BCL	MHD	INCORP MMOD 938545 CA*8
12	6/1/94	BCL	WDS	GRM	INCORP DCR *8-829 CA-82
11	5-18-94	BCL	MPW	RRB	INCORP MMOD 94-566 CA8, 3 & MMOD 92-546 CA81
10	10-22-93	MRB	BCL	GRM	INCORP MMOD 92-546 CA8, 92-556 CA-8
9	10-3-93	DWS	MRB	RSG	INCORP DCR 920841 CA*8
8	4/14/92	MRB	BCL	JEV	INCORP MMOD 918515 CA*8
7	11/28/89	MRB	PAL	GRM	INCORPORATED DCR 89-33 CA83 & MMOD 89-561, ADDED NOTE 5 & 6.
6	9/8/88	MRV	BCL	RRC	ADDED: VALVE PER WORK REQUEST 87 W001928 AND CONT. COORDINATES
5	1/22/87	JDM	WRD	RRC	ADDED TAG NUMBERS & EQUIPMENT I.D., INCORP ECA IN/002834A, REVISED LOCATION OF FILTER & FOGGER PER F.P.-28591, ADDED LUBE OIL SUPPLY TO PROVIDE MORE SYSTEM DETAIL, REVISED SAFETY CLASS PER MEMO SBF-86-876-YAEC.
4	10/3/86	PAL	MPW	RRC	REVISED PER ECA 99/000179A AND 99/109391A, INCORP. ECA 99/1539A, INCORP. NCR 82-268, WAS IN ERROR. ADDED VALVE TO FILTER F-1398 PER FP-28883 AND ADDED V98BB REVD END CONN'S ON FLEX HOSE PER FP-28591, ADDED FOREIGN PRINTS TO REF BLOCK, ADDED DGB TO INSTR PER DEAC P&ID, ADDED P&ID LEGEND NOTE.
3	6/15/86	JDM	DWS	RRC	INCORP. ECA 99/112515B INCORP. NCR 82/335 & 74/3581
2	02/27/86	WAL	JDM	WFD	ISSUED FOR OPERATIONS & INCORP. ECAS 99/109391B & 99/112515A
1	11/25/84	DWS	JNM	PEF	CODE BREAKS ADDED
0	06/29/84	MNS	JNM	WFD	ISSUED FOR FIELD VERIFICATION

REF. DRAWING NO.	REV	TITLE
FP 28883	11	EMERG DG AIR ASSY GEN ARRANGEMENT
FP 28699	9	EMERG DG SKID UNIT
FP 28591	15	EMERG DG START AIRCONT SCHEM AND LEGEND
9763-F-282181	13	DIESEL GENERATOR - AIR SYSTEMS P&ID

FPL ENERGY Seabrook Station

DIESEL GENERATOR STARTING AIR SYSTEM TRAIN "B" DETAIL

PID- 1-DG-B20465

05/31/05

NHY P1D28456.DGN1

PID- 1-DG-B20458

DIESEL GENERATOR
LUBE OIL
SKD-7A

FOR P&ID REFERENCE DRAWINGS, SYMBOLS AND ABBREVIATIONS
REFER TO DRAWINGS P&ID - LEGEND 1 AND P&ID - LEGEND 2

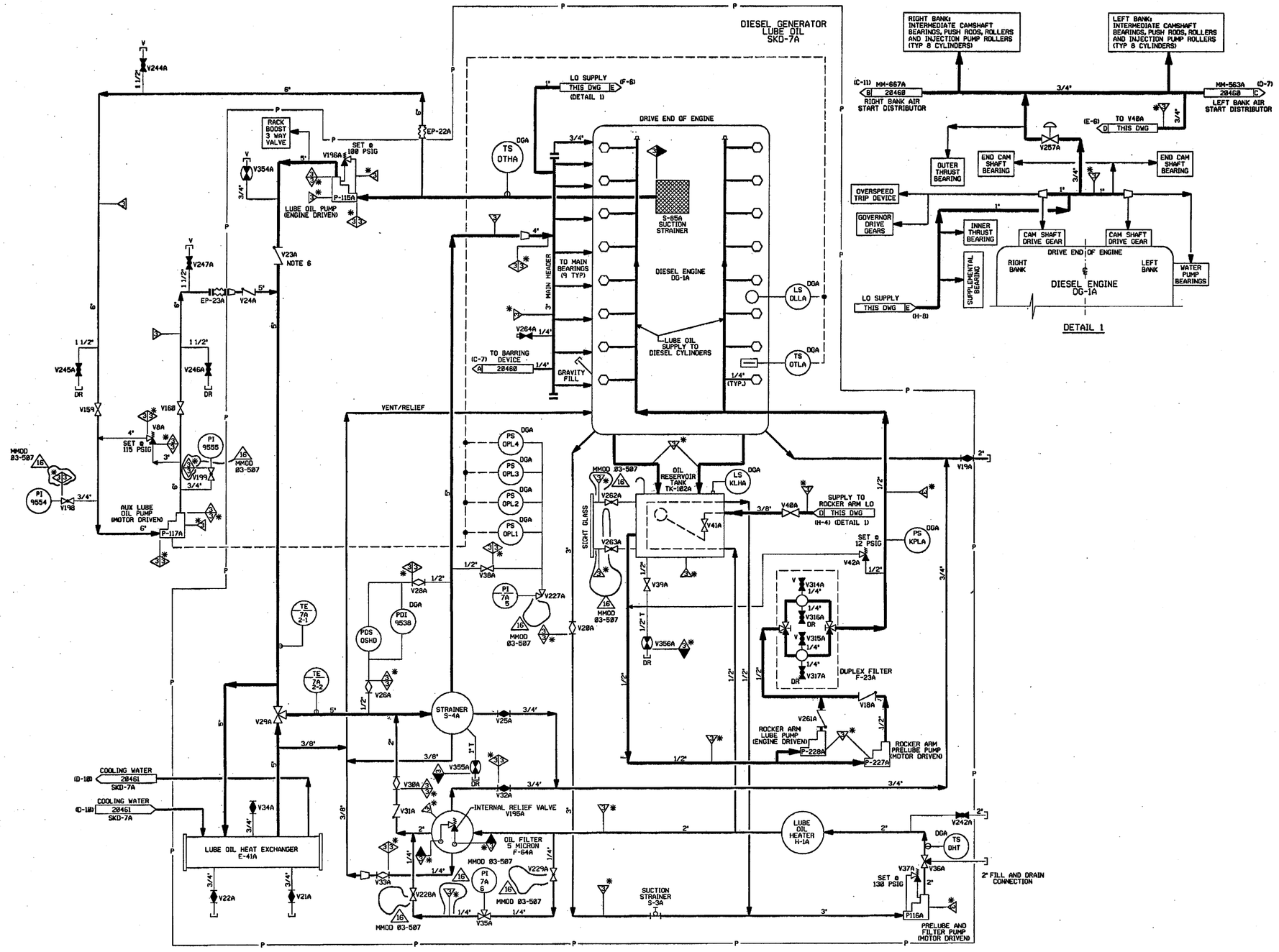

NOTES:
1. WORK THIS DRAWING WITH DRAWINGS 28456, 28457 & 28459 THRU 28462.
2. ALL LINES, EQUIPMENT, COMPONENTS AND INSTRUMENTATION HAVE SYSTEM PREFIX DG, UNLESS NOTED OTHERWISE.
3. DELETED.
4. VENT AND DRAIN CODE AND SAFETY CLASS BREAKS ARE AT THE DOWNSTEAM END OF THE OUTER ISOLATION VALVE PER DESIGN STANDARD 1-NHY-885111, UNLESS NOTED OTHERWISE.
5. △ INDICATES REVISION LEVEL
6. VALVE DISC DRILLED WITH 1/4" ORIFICE TO ALLOW BACKFLOW WITH ENGINE IN STANDBY.

PORTIONS OF THIS DRAWING ARE
NUCLEAR SAFETY RELATED

REV	DATE	DSGN	CHKD	CE	DESCRIPTION
16	10-31-06	JM	BCS	MR	INCORP MMOD 03-504 DCN 00
15	1/18/05	JM	BCS	MR	INCORP DCR 04-010 - DCN 00
14	10/15/03	BCS	MPW	RRB	INCORP MMOD 02-541 DCN-0,2 & MSE 03-160 REV.0
13	6/10/02	JM	BCS	MKC	INCORP CR 00-04158 REV. 00, MMOD 01-531 DCN-00, 01
12	1/30/02	BCS	MPW	MKC	INCORP MSE 01-0005 REV. 01
11	10/6/99	BCS	MPW	CWE	INCORP MMOD 98-554 DCN-00,01
10	7/30/97	MPW	BCS	VWS	INCORP MMOD 96-550 DCN 01
9	4/1/96	BCL	MPW	GRM	INCORP. DCR 94-12 CA0, 01
8	5/27/94	MPW	BCL	GRM	INCORP. MMOD 92-546 CA0, DCR 92-29 CA-0
7	5/11/92	MRB	BCL	GRM	INCORP. MMOD 91-622 CA0
6	10/29/90	MRB	JM	BCL	INCORP. MMOD 90-601 CA00 REVISED NOTE 4
5	02/18/87	JDM	PAL	VWS	REVISED PRESSURE SWITCH TIE-IN PER FP-20590, COMPLETE REDRAW TO CLARIFY LAYOUT FOR BETTER FLOW DIA UTILIZATION, ADD LINE SIZES TO SKID PIPING.
4	10/16/86	MAP	WRD	RRC	REVISED PER PIPING ERECTION ISO, ADDED LOCATION COORD'S.
3	6/23/86	WAL	VNK	RRC	UPDATED PER LATEST P&ID & INCORP NCR 93/228C
2	2/27/86	WAL	JDM	WFD	ISSUED FOR OPERATIONS
1	11/29/84	DWS	JNM	PEF	CODE BREAKS ADDED
0	5/29/84	MNS	JNM	WFD	ISSUED FOR FIELD VERIFICATION

REF. DRAWING NO.	REV	TITLE
9763-F-282182	16	DIESEL GENERATOR FUEL & LUBE OIL P&ID

FPL ENERGY Seabrook Station

DIESEL GENERATOR LUBE OIL SYSTEM TRAIN "A" DETAIL

PID- 1-DG-B20458

08/07/06

PID- 1-DG-B20463

DIESEL GENERATOR LUBE OIL SKD-7B

DRIVE END OF ENGINE

DIESEL ENGINE DG-1B

DETAIL 1

FOR P&ID REFERENCE DRAWINGS, SYMBOLS AND ABBREVIATIONS REFER TO DRAWINGS P&ID - LEGEND 1 AND P&ID - LEGEND 2

NOTES:
1. WORK THIS DRAWING WITH DRAWINGS 28466, 28467, 28464, 28465, 28468, & 28467.
2. ALL LINES, EQUIPMENT, COMPONENTS AND INSTRUMENTATION HAVE SYSTEM PREFIX DG, UNLESS NOTED OTHERWISE.
3. DELETED
4. VENT AND DRAIN SAFETY CLASS AND CODE BREAKS ARE AT THE DOWNSTEAM END OF THE ISOLATION VALVE PER DESIGN STANDARD 1-NHY-08111, UNLESS NOTED OTHERWISE.
5. △ INDICATES REVISION LEVEL
6. VALVE DISC DRILLED WITH 1/4" ORIFICE TO ALLOW BACKFLOW WITH ENGINE IN STANDBY.

PORTIONS OF THIS DRAWING ARE
NUCLEAR SAFETY RELATED

REV	DATE	DSGN	CHKD	CE	DESCRIPTION
19	10-3-06	JM	BCS	MR	INCORP. MMOD 03-584 DCN 08 & REINCORP. CR 00-04158 REV 00
18	12/8/04	JM	BCS	MR	INCORP. DCR 04-018 - DCN 00
17	3/24/04	BCS	JM	MKC	INCORP MSE 03-168 REV. 00, MMOD 02-541 DCN-08 & 02, DCR 00-029 DCN-06
16	12/31/03	JM	BCS	MKC	INCORP CR 00-04156 REV. 00
15	8/13/02	JM	MPW	BCS	INCORP CR 00-12795-01
14	1/12/01	BCS	MPW	MKC	PARTIAL INCORP DCR 00-0029 DCN-00 INCORP MSE 01-0005 REV. 0
13	8/25/99	DWS	BCS	CWE	INCORP. MMOD 980554 DCN-00 & 01
12	7/28/97	MPW	BCS	VWS	INCORP. MMOD 96-558 DCN 01
11	11/2/95	BCL	MPW	GRM	INCORP. DCR 94-012 CAR 01
10	5/18/94	BCL	DWS	GRM	PARTIAL INCORP. DCR 90-029
9	5/05/94	MPW	BCL	GRM	BACKED OUT DCR 90-029
8	5/05/94	MRB	MPW	RRB	INCORP. MMOD 92-546 CAR & DCR 90-0029 CAR
7	5/11/92	MRB	BCL	GRM	INCORP. MMOD 91-622 CAR
6	10/25/90	MRB	JM	BCL	INCORP. MMOD 90-581, CA00 REVISED NOTE 4
5	2/16/87	JDH	PAL	VWS	REVISED PRESSURE SWITCH TIE-IN PER FP. 20598, COMPLETE REDRAW TO CLARIFY LAYOUT FOR BETTER FLOW DIAGRAM UTILIZATION, ADDED LINE SIZES TO SKID PIPING.
4	10/16/86	PAL	WRD	RRC	INCORP. ECA 19/1894D, DGA ADDED PER UE&C P&ID, ADDED NOTE 5, FOREIGN PRINTS TO REF. BLOCK & DWG COORD TO CONTINUATION FLNGS.
3	6/23/86	WAL	VNK	RRC	UPDATE PER LATEST UE&C P&ID
2	2-27-86	WAL	JDH	WFD	ISSUED FOR OPERATIONS
1	11/24/84	DWS	JNH	PEF	CODE BREAKS ADDED
0	06/29/84	MNS	RSL	WFD	ISSUED FOR FIELD VERIFICATION

REF. DRAWING NO.	REV	TITLE
FP. 20598	13	EMERG. DG LUBE OIL SYS. SCHEMATIC
FP. 20699	9	EMERG. DG SKID UNIT GEN. ARRGMNT.
9763-F-282182	16	D.G. FUEL & LUBE OIL P&I DIAGRAM

FPL ENERGY Seabrook Station

DIESEL GENERATOR LUBE OIL SYSTEM TRAIN "B" DETAIL

PID- 1-DG-B20463

08/31/06

CATEGORY 1

PID- 1-DG-B20462

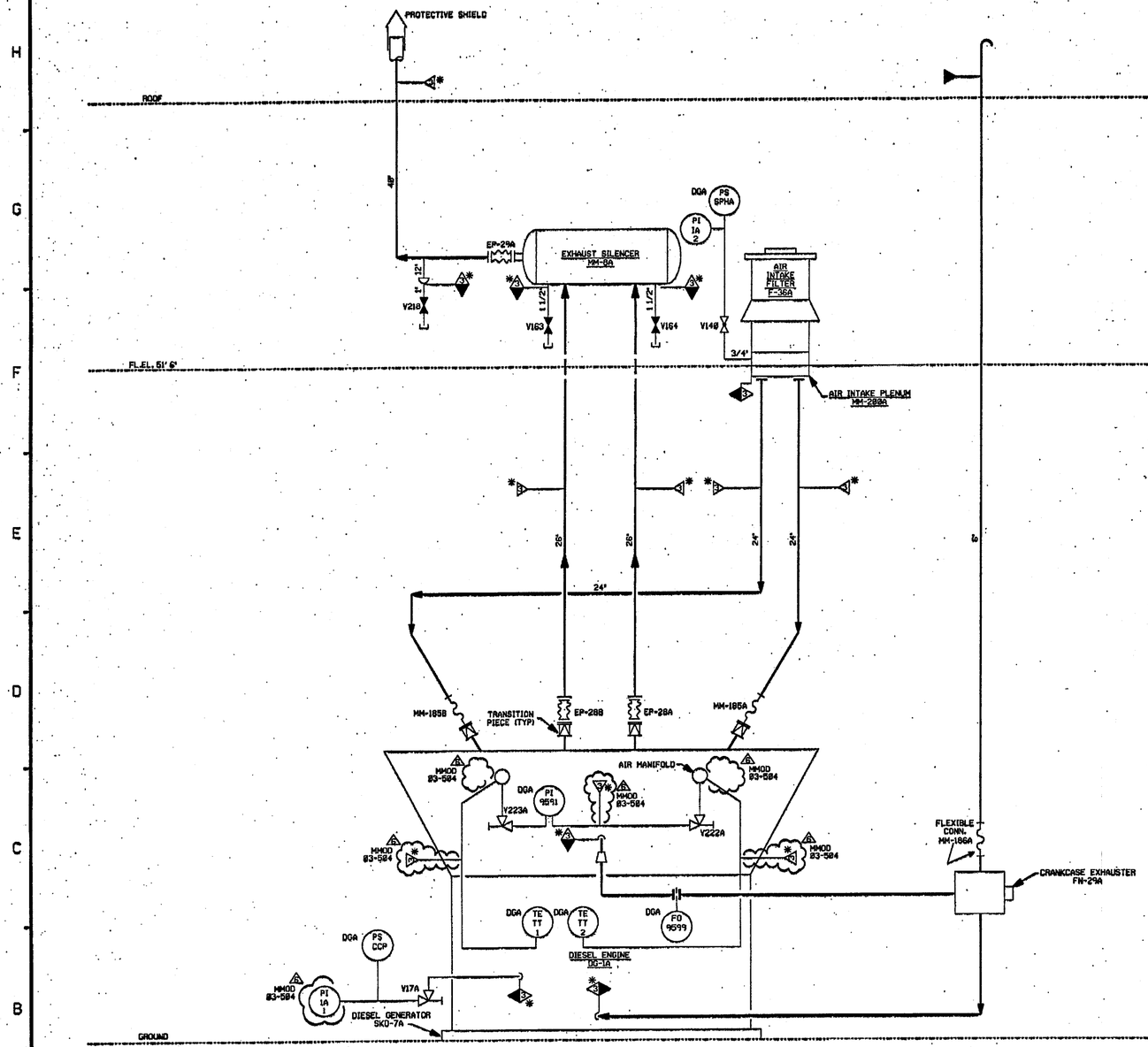

FOR P&ID REFERENCE DRAWINGS SYMBOLS AND ABBREVIATIONS REFER TO DRAWINGS P&ID-LEGEND 1 AND P&ID-LEGEND 2.

PORTIONS OF THIS DRAWING ARE
NUCLEAR SAFETY RELATED

NOTES:
1. WORK THIS DRAWING WITH DRAWINGS 28456, 28457, 28458, 28459, 28460, & 28461.
2. ALL LINES, EQUIPMENT, COMPONENTS AND INSTRUMENTATION HAVE SYSTEM PREFIX DG, UNLESS OTHERWISE NOTED.
3. DELETED
4. VENT AND DRAIN CODE AND SAFETY CLASS BREAKS ARE AT THE DOWNSTEAM END OF THE OUTER ISOLATION VALVE PER DESIGN STANDARD 1-MM7-005III, UNLESS NOTED OTHERWISE.
5. △ INDICATES REVISION LEVEL.

REV	DATE	DSGN	CHKD	CE	DESCRIPTION
6	11-16-06	JM	BCS	CWE	INCORP MMOD 83-584 DCN 88
5	10/6/99	BCS	MPW	CWE	INCORP MMOD 980554 DCN-88,91
4	7/30/97	MPW	BCS	YWS	INCORP MMOD 968558 DCN 81
3	4/2/96	BCL	MPW	GRM	INCORP. DCR 94-12 CAB & ADDED NOTE 5.
2	10/7/86	PAL	MAP	BRC	ADDED PIPE & CAP PER ERECTION ISO. ADDED DCA PER UE&C P&ID ADDED FOREIGN PRINTS TO REF BLOCK
1	02/27/86	WAL	JDM	WFD	ISSUED FOR OPERATIONS
0	06/29/84	MNS	RSL	WFD	ISSUED FOR FIELD VERIFICATION

REF. DRAWING NO.	REV	TITLE
FP20589	09	EMERG DG INTK. EXT 4 & CRKC SCHEM
FP20983	08	EMERG DG AIR INLET FILTER (DRY TYPE)
FP20840	07	EMERG DG EXHAUST SIL.(48 INCH 26"INLETS
9763-F-202181	13	DIESEL GENERATOR AIR SYSTEM P&ID

FPL ENERGY Seabrook Station

DIESEL GENERATOR INTAKE, EXHAUST & CRANKCASE VACUUM SYSTEM TRAIN "A" DETAIL

PID- 1-DG-B20462

11/06/06

P10- 1-DG-B20467

FOR P&ID REFERENCE DRAWINGS, SYMBOLS AND ABBREVIATIONS REFER TO DRAWINGS P&ID-LEGEND 1 AND P&ID LEGEND 2.

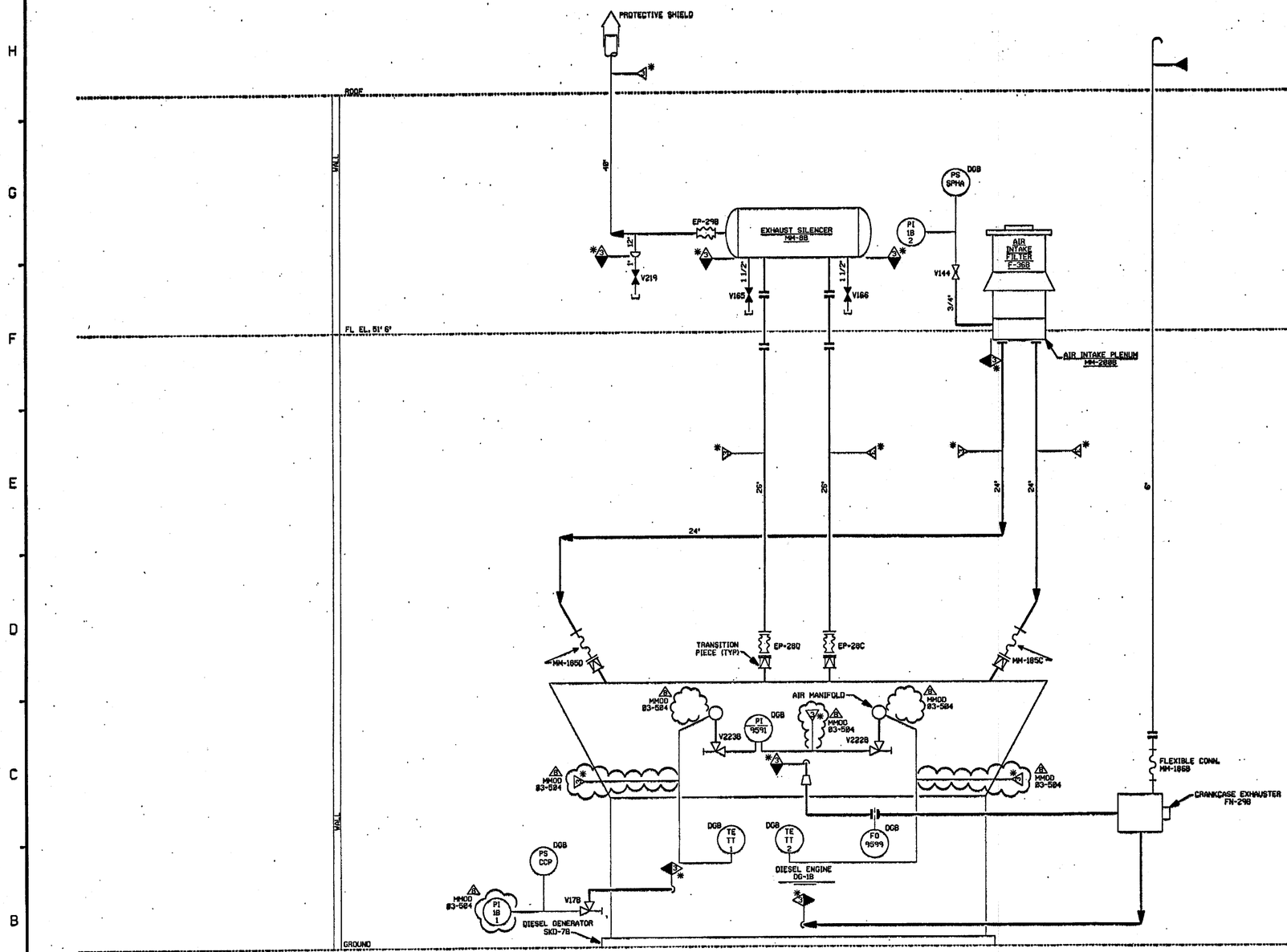

PORTIONS OF THIS DRAWING ARE

NUCLEAR SAFETY RELATED

NOTES:

1. WORK THIS DRAWING WITH DRAWINGS 28456, 28457, 28463, 28464, 28465, & 28466.
2. ALL LINES, EQUIPMENT, COMPONENTS, AND INSTRUMENTS HAVE SYSTEM PREFIX DG, UNLESS NOTED OTHERWISE.
3. DELETED.
4. △ INDICATES REVISION LEVEL.
5. VENT AND DRAIN CODE AND SAFETY CLASS BREAKS ARE AT THE DOWNSTEAM END OF THE OUTER ISOLATION VALVE PER DESIGN STANDARD 1-MHY-B0511, UNLESS NOTED OTHERWISE.

REV	DATE	DSGN	CHKD	CE	DESCRIPTION
8	[illegible]	JM	[illegible]	[illegible]	INCORP MMOD 83-584 DCN 88
7	8/25/99	DWS	BCS	CWE	INCORP MMOD 980554 DCN#88 & 81
6	7/30/97	MPW	BCS	YWS	INCORP MMOD 96-558 DCN 81
5	11/2/95	BCL	MPW	GRM	INCORP. DCR 94-12 CA8 & CA81
4	5/11/92	MRB	BCL	GRM	INCORP MMOD 91-622 CA8
3	10/3/86	MAP	BCL	RRC	REVISED PER PIPING ERECTION ISO'S & LATEST LEAC P&ID, ADDED NOTE 4 & FP DWGS TO REF BLOCK, DELETED B DESIGN FROM NOTE 1, ADDED LEGEND NOTE.
2	6/25/86	WAL	VNK	RRC	UPDATED PER LATEST U.E.&C. P&ID.
1	02/27/86	WAL	JDM	WFD	ISSUED FOR OPERATIONS
0	06/25/84	MKS	RSL	WFD	ISSUED FOR FIELD VERIFICATION

REF. DRAWING NO.	REV	TITLE
FP 28589	9	EMERG DG INTK, EXH & CRANKCASE VACUUM SYS
FP 28848	5	EMERG DG AIR INLET FILTER (DRY TYPE)
FP 28903	E	EMERG DG EXHAUST SILENCER(4@ IN@ 26" INLET
9763-F-282181	13	D.G. AIR SYS. P&ID

FPL ENERGY Seabrook Station

DIESEL GENERATOR INTAKE, EXHAUST & CRANKCASE VACUUM SYSTEM, TRAIN "B" DETAIL

PID- 1-DG-B20467

11/06/06