PID- 1-IA-B20636

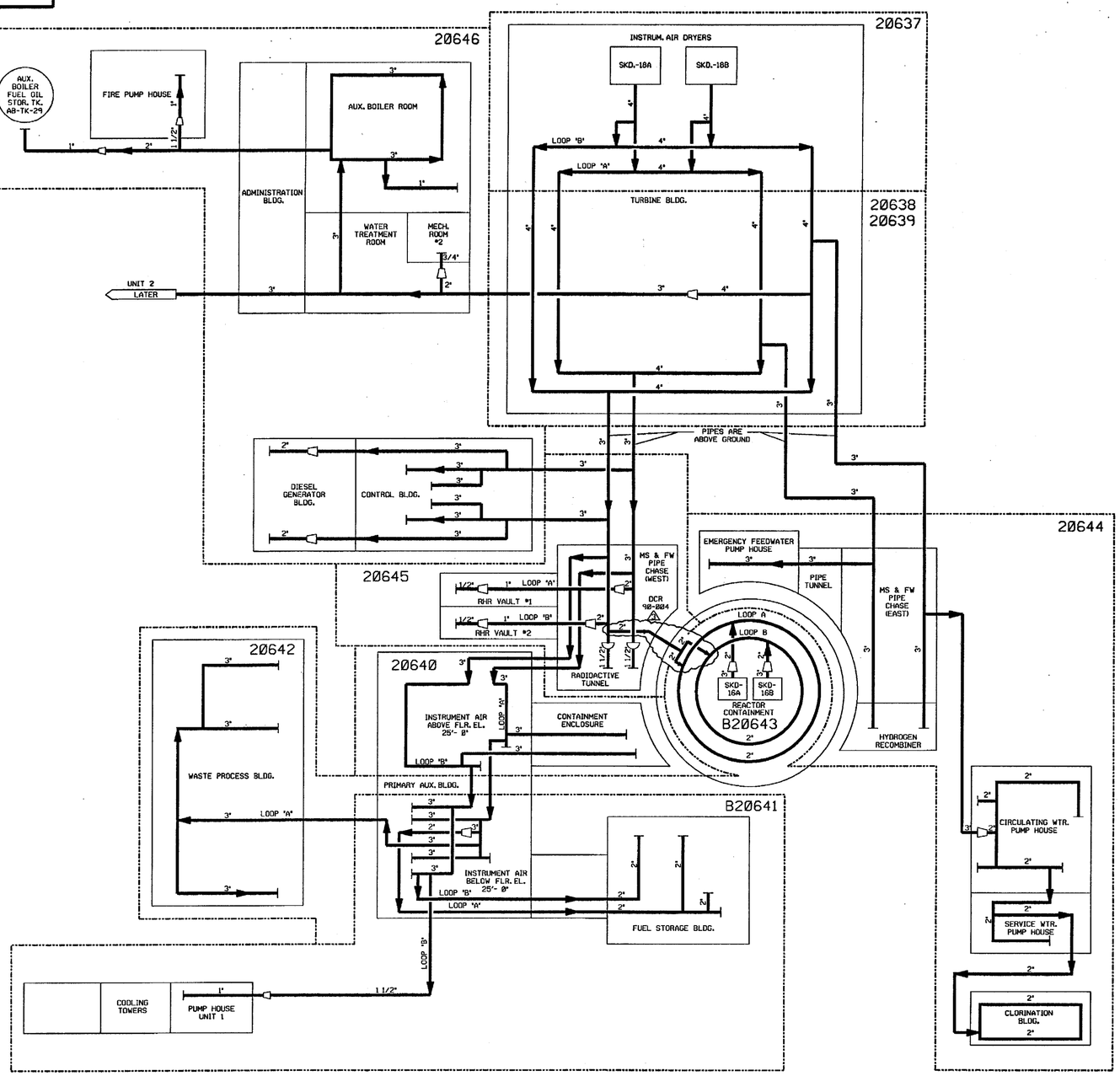

FOR P&ID REFERENCE DRAWINGS, SYMBOLS AND ABBREVIATIONS REFER TO DRAWINGS P&ID - LEGEND 1 AND P&ID - LEGEND 2

NOTES:

1. ALL LINES, EQUIPMENT, COMPONENTS, AND INSTRUMENTS HAVE SYSTEM PREFIX IA, UNLESS NOTED OTHERWISE.
2. WORK THIS DRAWING WITH DRAWINGS 20637 THRU 20646
3. ALL PIPING RUNNING BETWEEN BUILDINGS IS UNDERGROUND EXCEPT AS NOTED.
4. △ INDICATES REVISION LEVEL.

REV	DATE	DSGN	CHKD	CE	DESCRIPTION
3	10/27/03	JM	MPW	RRB	INCORP DCR 90-004 CA 00 PER CR 03-00510 REV00
2	1/18/98	MRB	GPM	GRM	INCORPORATED DCR 86-320 CA REVISED NOTE 1, DRAWING ENHANCEMENTS ADDED; REF. DWG. NOTE
1	1/21/87	MPW	WRD	VWS	REVISED PER LATEST SYSTEM DRAWINGS & ADDED NOTE 4.
0	4/25/86	DBF	JDM	WFD	ISSUED FOR OPERATIONS

REF. DRAWING NO.	REV	TITLE
9763-F-202109	9	MISC BLDGS COMP AIR HDRS P&ID
9763-F-202107	12	TURB BLDG COMP AIR HDRS P&ID
9763-F-202106	11	COMPRESSED AIR SYS. P & ID
9763-F-202108	15	MISC. BLDGS. COMP. AIR HEADER SH. 1 OF 2
9763-F-202105	11	COMPRESSER AIR SYSTEM KEY PLAN

FPL ENERGY Seabrook Station

INSTRUMENT AIR OVERVIEW

PID- 1-IA-B20636

10/24/03

PID- 1-IA-B20637

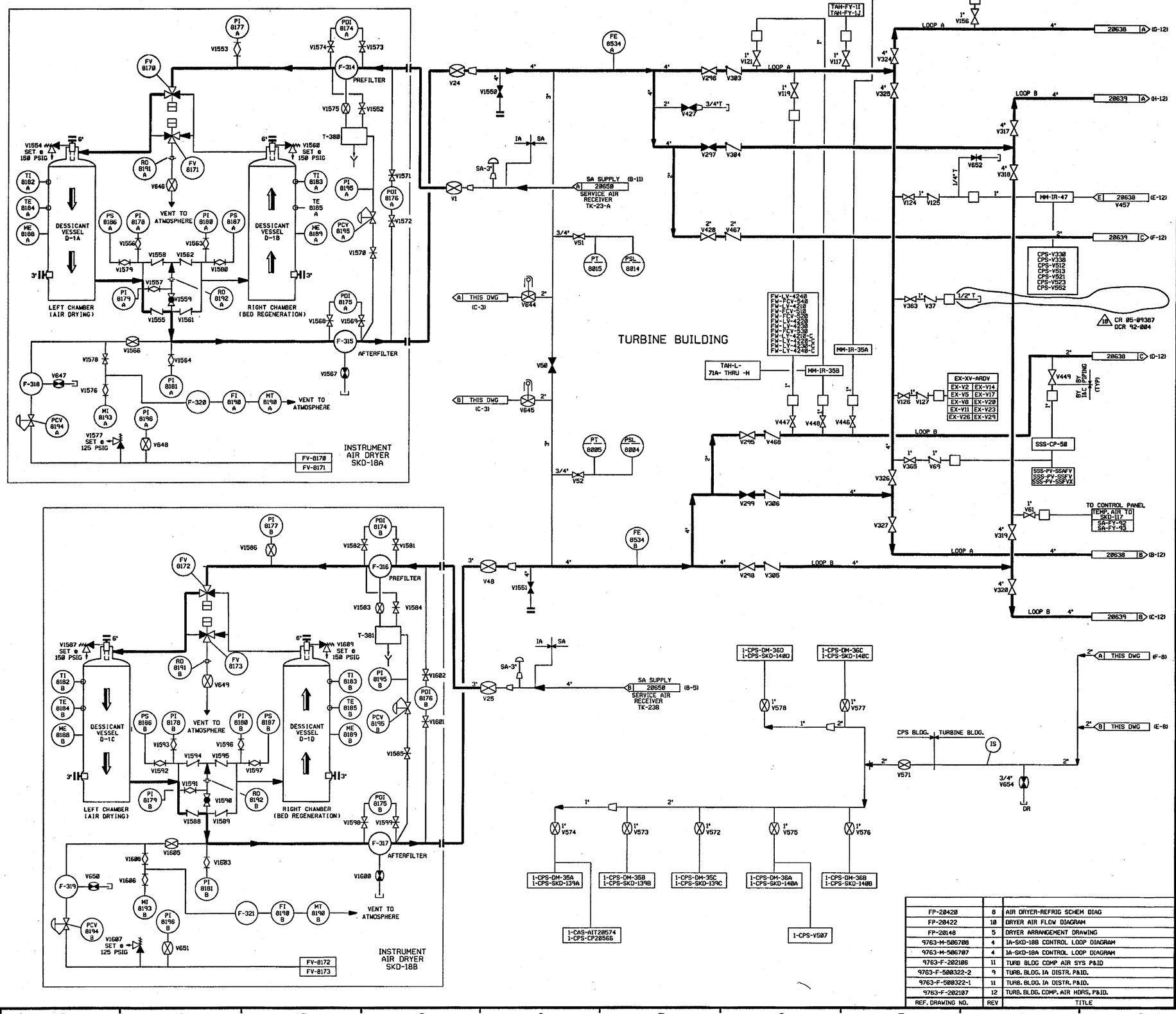

FOR P & ID REFERENCE DRAWING SYMBOLS AND ABBREVIATIONS REFER TO DRAWINGS P & ID-LEGEND 1 AND P & ID-LEGEND 2

NOTES:

1. ALL LINES, VALVES, EQUIPMENT, COMPONENTS AND INSTRUMENTS HAVE SYSTEM PREFIX IA, UNLESS NOTED OTHERWISE.
2. WORK THIS DRAWING WITH DRAWINGS 20636 AND 20638 THRU 20646.
3. ☐ DENOTES DUAL AIR FILTER.
4. ALL LINES, VALVES, EQUIPMENT, COMPONENTS AND INSTRUMENTS ARE SAFETY CLASS NNS.
5. P&ID SHOWN FOR INSTR. AIR DRYERS 18A & B DEPICTS AIR SIDE ONLY. FOR REFRIGERATION SIDE OF DRYERS REFER TO FP20420.
6. INSTRUMENTATION ON THIS DWG DOWNSTREAM OF THE PIPING ROOT VALVE CONNECTIONS HAS NOT BEEN FIELD VERIFIED; EXCEPT V447, V448, V446, V117, V156, V121, V119, & SUPPLY TO IA-MM-759.
7. △ INDICATES REVISION LEVEL
8. VALVE SYMBOL MAY NOT BE REPRESENTATIVE OF INSTALLED COMPONENT TYPE. REFER TO VALVE LIST.

REV	DATE	DSGN	CHKD	CE	DESCRIPTION
18	11/30/05	JM	BCS	DBA	INCORP CR 05-09387 REV 00, REINCORP DCR 92-004 CA00
17	4/19/05	BCS	JM	PAL	INCORP DCR 97-13 DCN 58, 55, 174
16	12/17/02	BCS	JM	MKC	INCORP DCR 00-0014 DCN-00, 01, 02, 07
15	10/31/02	BCS	MPW	MKC	INCORP DCR 00-0014, DCN-11
14	10/04/02	BCS	MPW	MKC	PARTIAL INCORP DCR 00-0014, DCN-00
13	9/30/02	BCS	MPW	MKC	PARTIAL INCORP DCR 00-0014, DCN-00
12	8/21/02	BCS	MPW	MKC	PARTIAL INCORP DCR 00-0014, DCN-00
11	5/22/01	BCS	MPW	MKC	INCORP ECA 99/117267B
10	6/15/00	BCS	MPW	JCM	INCORP DCR 98-41 DCN-00
9	6/16/97	MPW	DWS	DJM	REINCORP DCR 930016 CA#1
8	1/31/96	BCS	MPW	RSG	INCORP MMOD 95-570 CA-0
7	3/24/94	DWS	BCL	WFZ	INCORP DCR 930016 CA#1
6	11/18/92	MRB	DWS	IW	INCORP DCR 92-004 CA0
5	10/29/90	MRB	DSB	BCL	INCORP.: MMOD 90-601 CA00
4	8/11/88	GPM	APL	RRC	INCORP.:DCR 86-341CA4; REVISED: NOTE 6 ADDED: DISCIPLINE BOUNDARY
3	12/28/87	MPW	BCL	DJM	INCORPORATE: DCR 87-371 REVISED: NOTE A.
2	10/28/87	MAP	BCL	RRC	INCORP ECA 99/117378C, PROVIDED LINE SIZES FOR SKID PIPING, ADDED COUPLINGS, FLANGES & MISC. ITEMS PER F.P. ADDED CONTINUATION FLAG COORDINATES. ADDED NOTES 5,6 & 7.
1	6/27/86	JDM	WRD	RRC	FLANGES ADDED, V449 RELOCATED PER NHY WALKDOWN, ADDED LINE SIZES TO SKID PIPING, ADDED REF. DWGS.
0	4/25/86	DBF	VNK	WFD	ISSUED FOR OPERATIONS

REF. DRAWING NO.	REV	TITLE
FP-20420	8	AIR DRYER-REFRIG SCHEM DIAG
FP-20422	10	DRYER AIR FLOW DIAGRAM
FP-20148	5	DRYER ARRANGEMENT DRAWING
9763-M-506708	4	IA-SKD-18B CONTROL LOOP DIAGRAM
9763-M-506707	4	IA-SKD-18A CONTROL LOOP DIAGRAM
9763-F-202106	11	TURB BLDG COMP AIR SYS P&ID
9763-F-500322-2	9	TURB. BLDG. IA DISTR. P&ID.
9763-F-500322-1	11	TURB. BLDG. IA DISTR. P&ID.
9763-F-202107	12	TURB. BLDG. COMP. AIR HDRS, P&ID.

FPL ENERGY Seabrook Station

INSTRUMENT AIR
TURBINE BUILDING
DETAIL

PID- 1-IA-B20637

11/22/05

PID- 1-IA-B20638

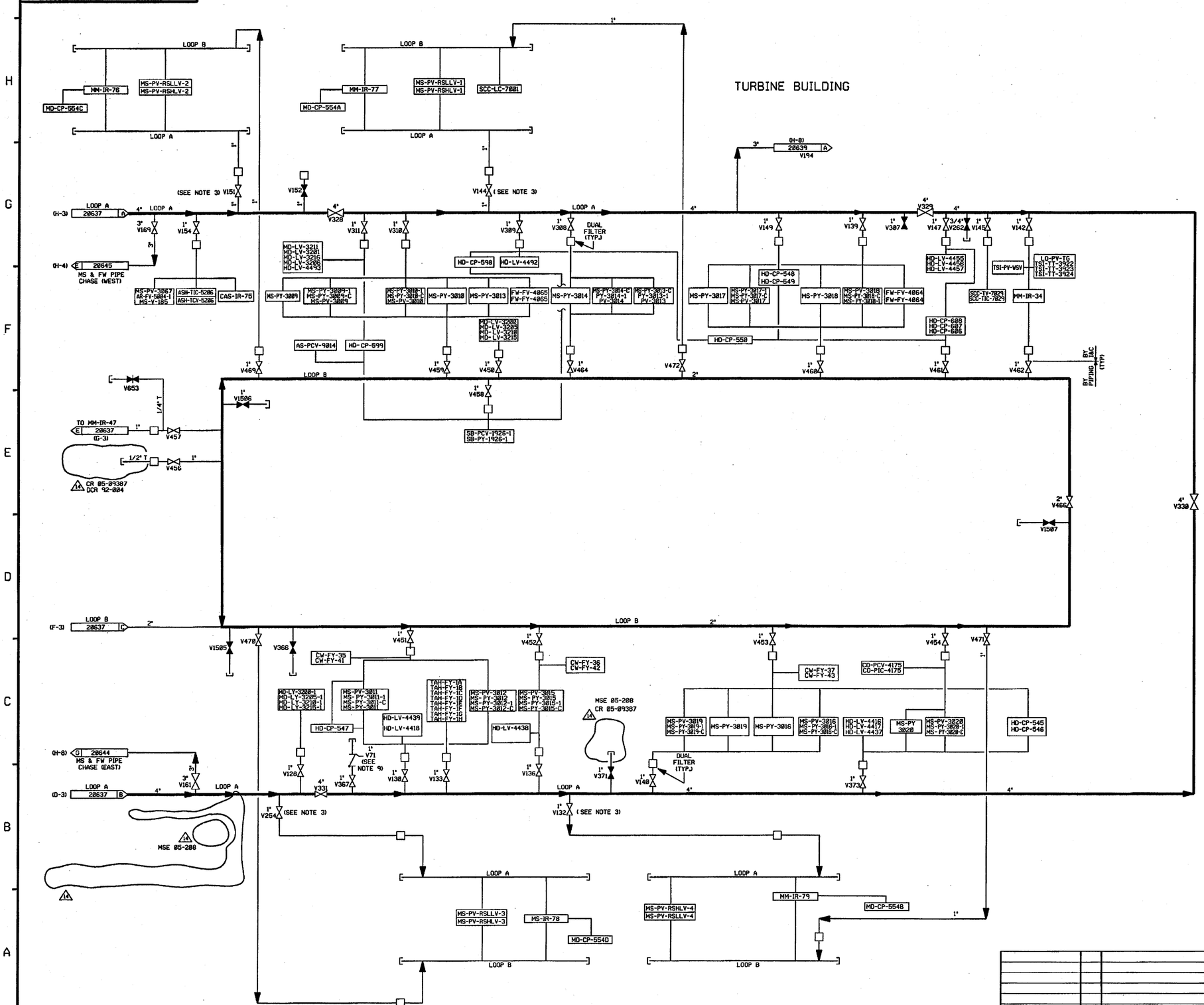

FOR P&ID REFERENCE DRAWINGS, SYMBOLS AND ABBREVIATIONS REFER TO DRAWINGS P&ID - LEGEND 1 AND P&ID - LEGEND 2.

NOTES:

1. ALL LINES, VALVES, EQUIPMENT, COMPONENTS AND INSTRUMENTS HAVE SYSTEM PREFIX IA, UNLESS NOTED OTHERWISE.
2. WORK THIS DRAWING WITH DRAWINGS 20636, 20637 & 20639 THRU 20646.
3. THE FOLLOWING VALVES ARE FOR SERVICING THE OPERATING FLOOR, V-254, V-132, V-144 & V-151.
4. ☐ DENOTES DUAL AIR FILTER
5. ALL LINES, VALVES, EQUIPMENT, COMPONENTS AND INSTRUMENTS ARE SAFETY CLASS NNS, UNLESS NOTED OTHERWISE.
6. INSTRUMENTATION ON THIS DWG. DOWNSTREAM OF THE PIPING ROOT VALVE CONNECTION HAS NOT BEEN FIELD VERIFIED; EXCEPT SUPPLY TO IA-MM-760.
7. SYSTEM DESCRIPTION IS SD-4.
8. VALVE SYMBOL MAY NOT BE REPRESENTATIVE OF INSTALLED COMPONENT TYPE, REFER TO VALVE LIST.
9. INTERNALS OF IA-V71 HAVE BEEN REMOVED AND VALVE IS NON-FUNCTIONAL.

REV	DATE	DSGN	CHKD	CE	DESCRIPTION
14	11/30/05	JM	BCS	TDA	INCORP. CR 05-09387 REV. 00 & DWG 202294 REV 5 AND MSE 05-208 REV 00; REINCORP DCR 92-004 CA00
13	2/18/05	BCS	JM	RRB	INCORP. CR 03-06014 REV. 00
12	12/17/02	BCS	JM	MKC	INCORP. DCR 00-014 DCN-02
11	6/19/97	MPW	DWS	RSG	INCORP. DCR 94-03 DCN 07
10	6/18/97	MPW	DWS	GRM	INCORP. DCR 95-39 CA 29 & 46
9	1/31/97	BCS	DWS	RSG	INCORP. MMOD 95-570 CA-0
8	12/2/95	BCL	MPW	RJF	REINCORP. DCR 91-12 CA0 & 95-39 CA 0
7	11/10/92	MRB	DWS	IW	INCORP. DCR 92-4 CA0
6	9/9/92	MRB	DWS	IW	INCORP. DCR 91-6 CA0
5	4/28/92	DWS	BCL	RSG	INCORP. MMOD 920616 CA0
4	10-10-91	MRB	JM	IW	PARTIAL INCORP. OF DCR 91-6 CA0
3	8/29/89	MRB	BCL	IW	INCORPORATED DCR 89-31 CA 0
2	8/11/88	GPM	APL	RRC	INCORP. DCR 86-341CA4 & DR 82-189A REVISED: NOTE 5 & 6. ADDED: DISCIPLINE BOUNDARY
1	10/24/86	MRJ	WRD	PHH	REVISED REF. DOC'S, & DRAFTING ERRORS ADDED NOTES 6 & 7
0	4/25/86	DBF	JDM	WFD	ISSUED FOR OPERATIONS

REF. DRAWING NO.	REV	TITLE
9763-F-202107	12	TURB BLDG COMP AIR HDRS P&ID
9763-F-500322-1	13	TURB BLDG IA DISTRIB. P&ID
9763-F-500322-2	10	TURB. BLDG. IA DISTR. PID

FPL ENERGY Seabrook Station

INSTRUMENT AIR
TURBINE BUILDING
DETAIL

PID- 1-IA-B20638

11/28/05

PID- 1-IA-B20639

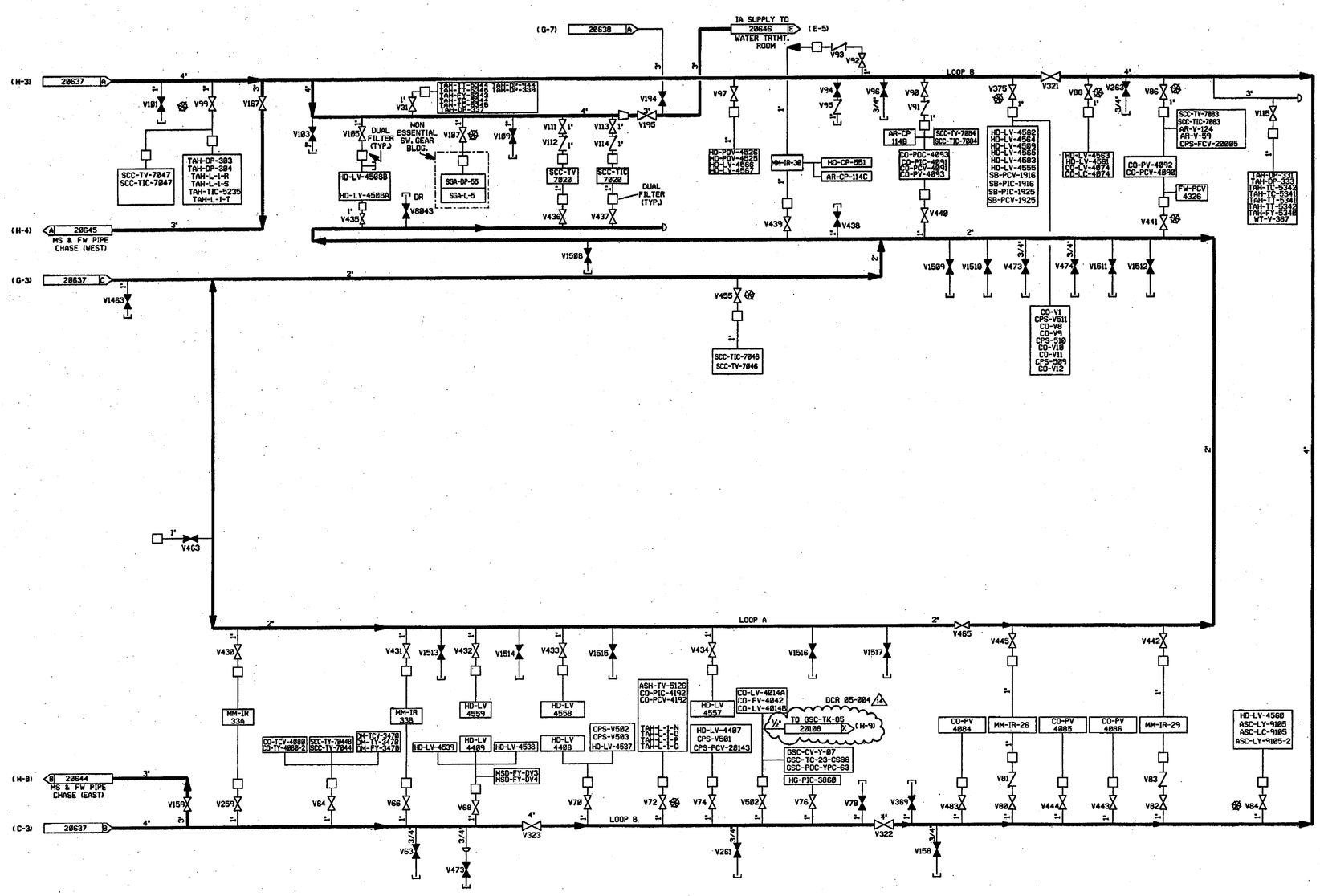

FOR P&ID REFERENCE DRAWINGS, SYMBOLS AND ABBREVIATIONS REFER TO DRAWINGS P&ID - LEGEND 1 AND P&ID - LEGEND 2

NOTES:

1. ALL PIPING, VALVES, EQUIPMENT, COMPONENTS, AND INSTRUMENTS HAVE SYSTEM PREFIX IA, UNLESS NOTED OTHERWISE.
2. WORK THIS DRAWING WITH DRAWINGS 20636 THRU 20638, & 20640 THRU 20646.
3. ☐ DENOTES DUAL AIR FILTER.
4. ALL PIPING, VALVES, EQUIPMENT, COMPONENTS, AND INSTRUMENTS ARE SAFETY CLASS NNS, UNLESS NOTED OTHERWISE.
5. DELETED
6. △ INDICATES REVISION LEVEL
7. VALVE SYMBOL MAY NOT BE REPRESENTATIVE OF INSTALLED COMPONENT TYPE. REFER TO VALVE LIST.
8. ⊗ INDICATES INSTRUMENTATION DOWNSTREAM OF PIPING ROOT VALVE HAS BEEN VERIFIED. SEE INSTRUMENT AIR DETAIL DRAWING 1-NHY-550007.

REV	DATE	DSGN	CHKD	CE	DESCRIPTION
14	10/17/06	BCS	JWL	WFD	INCORP DCR 05-004 DCN-01
13	4/22/05	BCS	GPS	PAL	INCORP. DCR 97-13 DCN-00, 50, DCR 02-016 DCN-12, DCR 02-015 DCN-00
12	2/18/05	BCS	JM	RRB	INCORP. CR 03-00747, 03-00749, 03-05014, 03-04137, 03-06016, 05-01952
11	2/7/05	BCS	JM	PAL	INCORP DCR 97-13, DCN-124
10	11/11/00	MPW	DWS	STB	INCORP MMOD 99-511 DCN 00 7 06
9	6/18/97	MPW	DWS	GRM	INCORP MMOD 96-550 DCN 01, DCR'S 92-53 CA 9, 92-39 CA 23 & DCN
8	1/31/96	BCS	MPW	RSG	INCORP MMOD 95-578 CA0
7	11/6/92	MRB	BCL	RSG	INCORP DCR 92-28, CA-06 AND DCR 91-40 CA01
6	11/21/90	WDS	RRC	BEB	INCORP DCR 90-027 CA02
5	10/12/90	MRB	FCB	ES	INCORP DCR 87-138 CA0
4	3/31/90	MRB	HP	RRC	INCORP DCR 90-9 CA0 DELETED NOTE 5
3	12/29/89	MRB	HP	WFD	INCORP. MMOD 89-546 CA02 REVISED NOTE 4
2	11/26/86	WDS	WRD	RRC	REMOVED CHANGE ITEM 1 PER ASBUILT CONDITION, REMOVED CHG ITEM 2-DETAIL WAS FOR UNIT 2 ONLY. REVISED DRAFTING ERRORS, REINSTATED V-458 PER DR 82/189A ADDED CONT DWG REF COORD. & NOTE 5 & 6.
1	6/23/86	CB	VNK	RRC	REVISED PER DR 82/189A
0	4/25/86	CB	JDM	WFD	ISSUED FOR OPERATIONS

REF. DRAWING NO.	REV	TITLE
9763-F-202107	12	TURBINE BUILDING COMP AIR HDRS P & ID
9763-F-500322-2	10	TURBINE BUILDING IA DISTR. PID.

FPL ENERGY Seabrook Station

INSTRUMENT AIR
TURBINE BUILDING
DETAIL

PID- 1-IA-B20639

10/16/06

PID- 1-IA-B20640

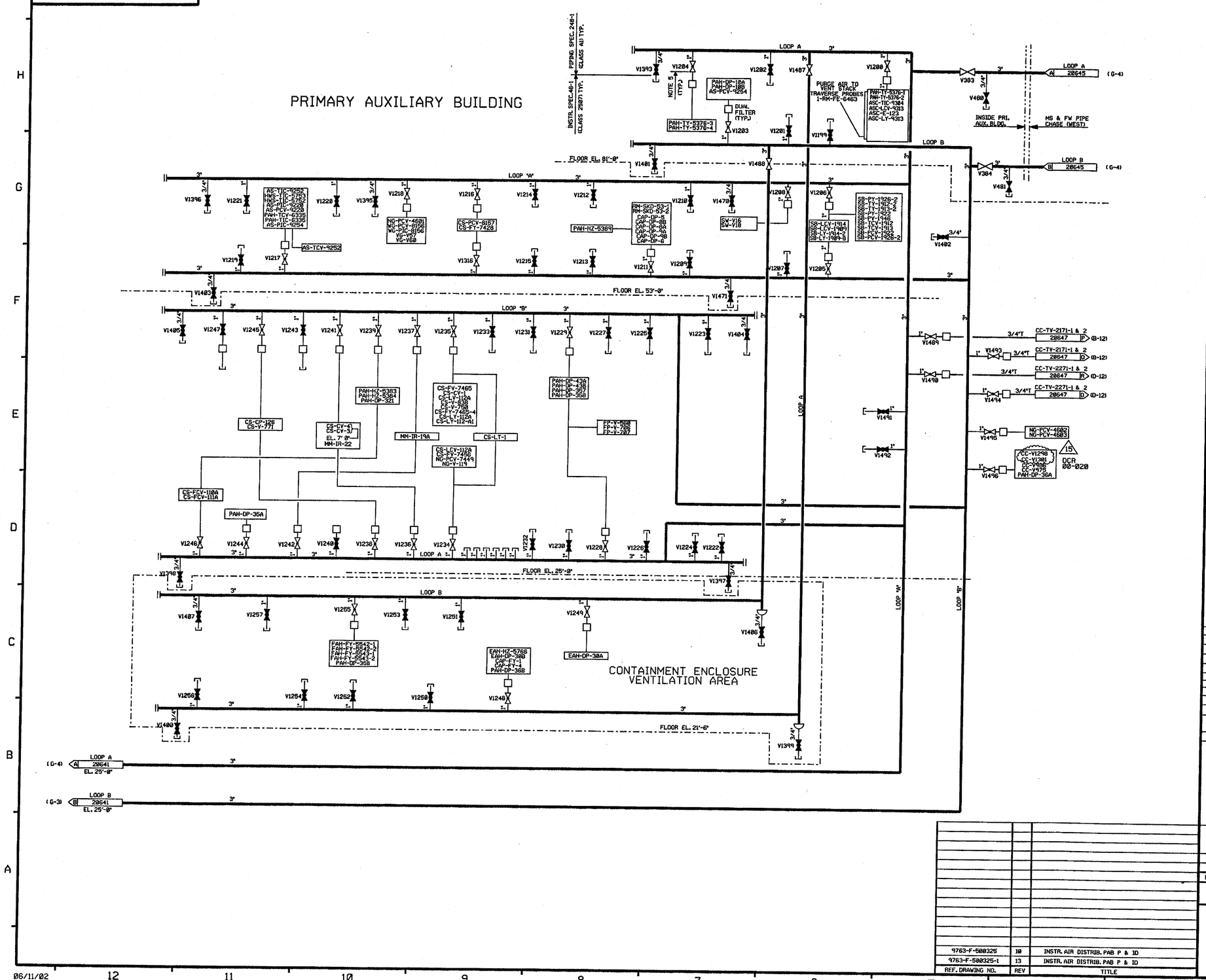

FOR P&ID REFERENCE DRAWINGS, SYMBOLS AND ABBREVIATIONS REFER TO DRAWINGS P&ID-LEGEND 1 AND P&ID-LEGEND 2.

NOTES:

1. WORK THIS DRAWING WITH DRAWINGS 20636 THRU 20639 & 20641 THRU 20646.
2. ALL LINES, EQUIPMENT, COMPONENTS, AND INSTRUMENTS HAVE SYSTEM PREFIX IA, UNLESS NOTED OTHERWISE.
3. ☐ DENOTES DUAL AIR FILTER.
4. ALL LINES, EQUIPMENT, COMPONENTS, AND INSTRUMENTS ARE SAFETY CLASS NNS UNLESS NOTED OTHERWISE.
5. INSTRUMENTATION ON THIS DWG DOWNSTREAM OF PIPING ROOT VALVE CONNECTIONS HAS NOT BEEN VERIFIED.
6. △ INDICATES REVISION LEVEL.
7. DELETED
8. DELETED.
9. VALVE SYMBOL MAY NOT BE REPRESENTATIVE OF INSTALLED COMPONENT TYPE, REFER TO VALVE LIST.

PORTIONS OF THIS DRAWING ARE

NUCLEAR SAFETY RELATED

REV	DATE	DSGN	DRWN	CHKD	CDE	SES	DESCRIPTION
15	6/11/02	BCS	—	JM	—	MAP	INCORP DCR 00-0020 DCN 00
14	12/2/00	MPW	—	MRB	JPS	JPS	INCORP MMOD 00-527 DCN 00
13	11/2/00	MPW	—	BCS	MRB	RPN	INCORP DCR 99-18 DCN 00
12	2/28/96	DWS	—	BCS	MPW	VWS	INCORP MMOD 940574 CA#0
11	1/31/96	BCS	—	MPW	DWS	RSG	INCORP MMOD 95-578 CA#0
10	8/12/95	BCL	—	DWS	MPW	DJM	INCORP MMOD 94-578 CA#0
9	12/9/94	DWS	—	BCL	MPW	MHO	INCORP MMOD 930545 CA#0
8	6/3/94	DWS	—	BCL	MPW	IW	INCORP MMOD 940505 CA#0
7	10/9/91	GPM	FCB	JM	MRB	RWM	INCORP. DCR 90-32 CA#15
6	9/29/89	MRB	FCB	PAL	MPW	RRC	INCORP. DCR 88-12 CA#0
5	5/24/89	MRB	FCB	GPM	PAL	RRC	INCORP. DCR 87-264 CA 09 REVISED: NOTE 2,3 & 4
4	12/17/86	JDM	TAK	PAL	BCL	RRC	INCORP ECA 05/118510A
3	11/21/86	JDM	TAK	PAL	BCL	RRC	ADDED V8030, V8031, V8032 & V8033 PER ECA 05/113174F, REMOVED DR DESIGNATION PER UE&C, PAID, ADDED TUBING TO ACCL USERS PER AS INSTALLED CONDITION, ADDED NUCLEAR SAFETY RELATED NOTE, ADDED REDUCER IN BACK-UP AIR BOTTLE SUPPLY LINE TO AGREE WITH ECA 98/118838C, ADDED TUBING SIZES TO BACK-UP AIR BOTTLE INSTALLATION, ADDED 3000# VLV NGS TO BACK-UP AIR BOTTLES, VALVE V1214 SHOWN CLOSED WITH DUAL FILTER, REVISED D.O.T. BOTTLE QUANTITY TO AGREE WITH ECA 98/118838C, ADDED 6 - 1" STUBS W/CAPS, REV'D UE&C REF. DWG REVISION LEVEL, ADDED PAID REF DWG NOTE, ADDED CONT FLAG COORD, ADDED NOTES 5 & 6
2	9/2/86	JDM	WES	MAP	VNK	RRC	INCORP ECA 05/113174F
1	6/23/86	DBF	UE&C CADD	VNK	JMS	RRC	CORRECTED TYPO ERRORS PER UE&C PAID
0	4-25-86	DBF	MRB	JDM	DFM	WFD	ISSUED FOR OPERATIONS. INCORP ECA 5L2 05/108633C, 05/113174F, 05/114529A

REF. DRAWING NO.	REV	TITLE
9763-F-500325	10	INSTR. AIR DISTRIB. PAB P & ID
9763-F-500325-1	13	INSTR. AIR DISTRIB. PAB P & ID

North Atlantic Energy Service Corporation

SEABROOK STATION

INSTRUMENT AIR
PRIMARY AUX. BUILDING
DETAIL

PID- 1-IA-B20640

06/11/02

CATEGORY 1

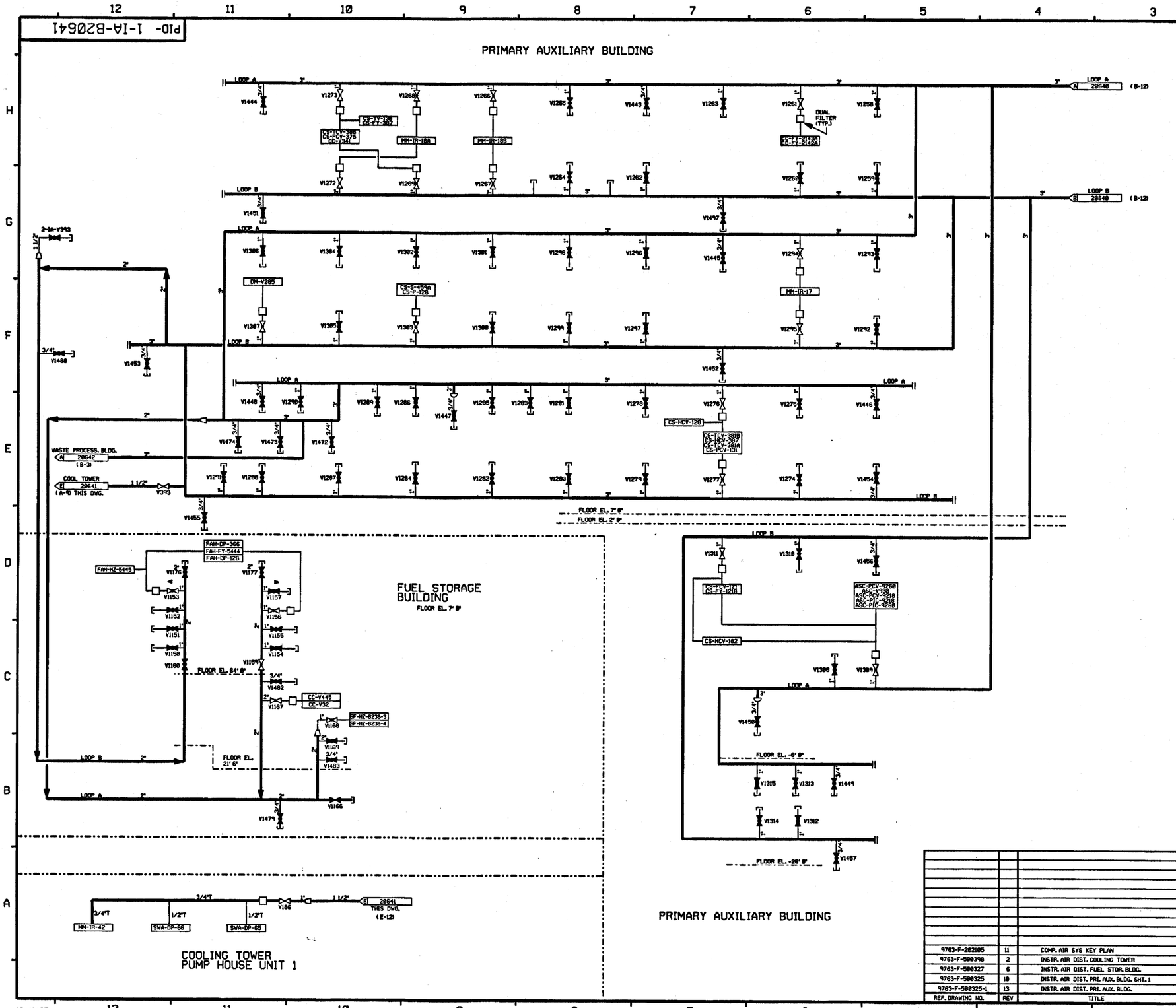

FOR P&ID REFERENCE DRAWINGS, SYMBOLS AND ABBREVIATIONS REFER TO DRAWINGS P&ID - LEGEND 1 AND P&ID - LEGEND 2

NOTE:

1. WORK THIS DRAWING WITH DRAWINGS 20636 THRU 20640, & 20642 THRU 20648.
2. ALL PIPES, VALVES, EQUIPMENT, COMPONENTS, AND INSTRUMENTS HAVE SYSTEM PREFIX 1A, UNLESS NOTED OTHERWISE.
3. ☐ DENOTES DUAL AIR FILTER.
4. ALL PIPES, VALVES, EQUIPMENT, COMPONENTS, AND INSTRUMENTS ARE SAFETY CLASS N, UNLESS NOTED OTHERWISE.
5. INSTRUMENTATION ON THIS DWG. DOWNSTREAM OF PIPING ROOT VALVE CONNECTIONS HAS NOT BEEN VERIFIED.
6. △ INDICATES REVISION LEVEL
7. DELETED
8. VALVE SYMBOL MAY NOT BE REPRESENTATIVE OF INSTALLED COMPONENT TYPE, REFER TO VALVE LIST.

△2 MMOD 95-570

REV	DATE	DSGN	DRWN	CHKD	CDE	SES	DESCRIPTION
2	1/31/96	BCS	—	MAR	DWS	RSG	INCORP. MMOD 95-570 CA-0
1	11/6/86	MRJ	TAK	WRD	BCL	RRC	ADDED NIPPLES AND CAPS PER AS-BLT. CONC. REVISED PIPING AND DRAIN ARRGT. PER UE&C DWG. F-800251. ADDED DUAL FLTR. IN CLG. TWR. PMP. HOUSE PER UE&C DWG F-500208. ADDED CONT. FLAG COORD AND NOTES 5, 6 & 7.
0	4/25/86	DBF	MRB	JDM	JNM	WFD	ISSUED FOR OPERATIONS

REF. DRAWING NO.	REV	TITLE
9763-F-202105	11	COMP. AIR SYS KEY PLAN
9763-F-500398	2	INSTR. AIR DIST. COOLING TOWER
9763-F-500327	6	INSTR. AIR DIST. FUEL STOR. BLDG.
9763-F-500325	10	INSTR. AIR DIST. PRI. AUX. BLDG. SHT. 1
9763-F-500325-1	13	INSTR. AIR DIST. PRI. AUX. BLDG.

North Atlantic Energy Service Corporation

SEABROOK STATION

INSTRUMENT AIR
PRIMARY AUX. BUILDING
COOLING TOWER & FUEL STORAGE
DETAIL

PID- 1-IA-B20641

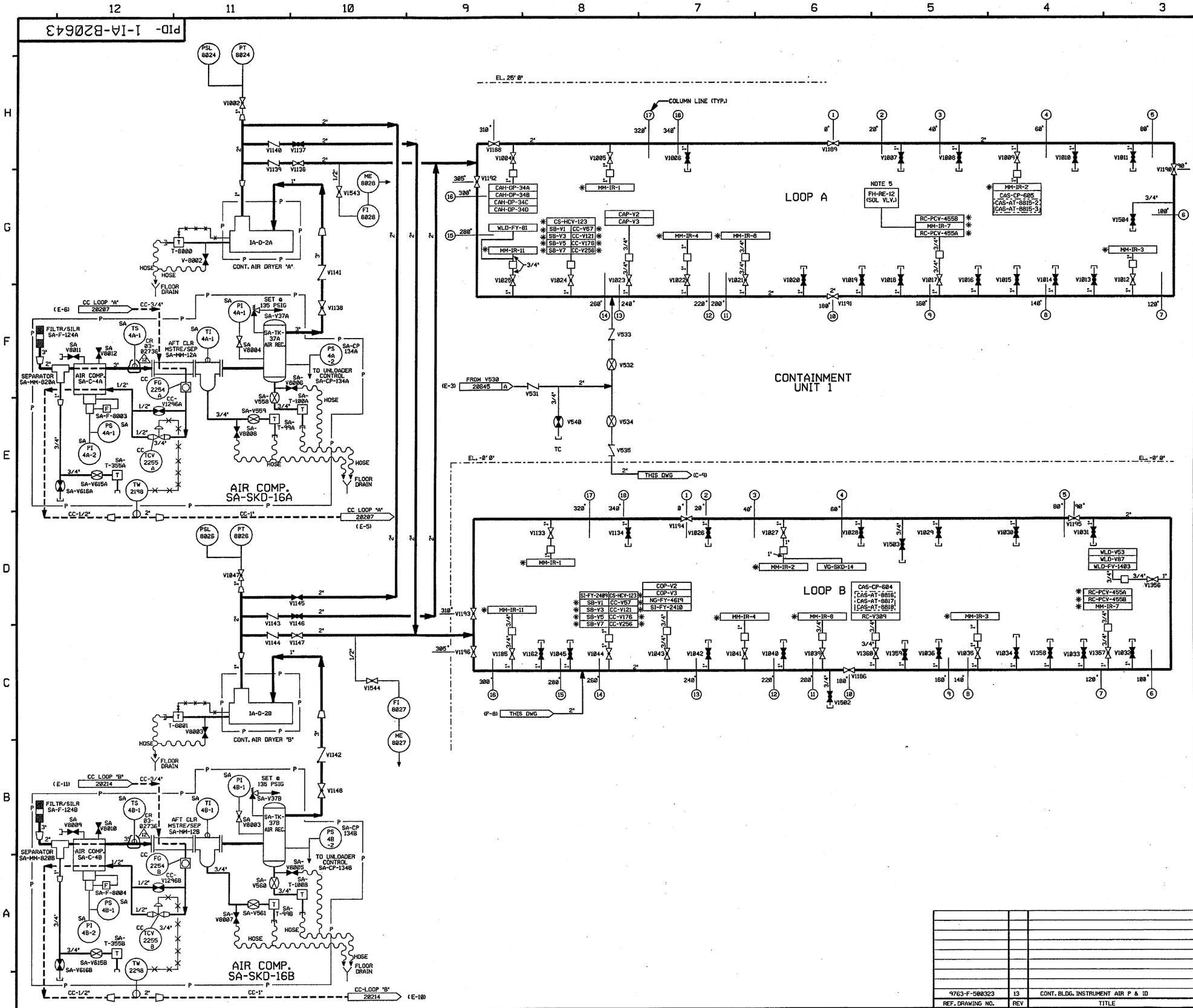

FOR P&ID REFERENCE DRAWINGS, SYMBOLS AND ABBREVIATIONS REFER TO DRAWINGS P&ID - LEGEND 1 AND P&ID - LEGEND 2

NOTES:

1. WORK THIS DRAWING WITH DRAWINGS 20636 THRU 20642 & 20645 THRU 20648.
2. ALL LINES, EQUIPMENT, COMPONENTS AND INSTRUMENTS HAVE SYSTEM PREFIX IA, UNLESS NOTED OTHERWISE.
3. ASTERISK (*) DENOTES DUAL AIR SUPPLY LOOP A & LOOP B.
4. ☐ DENOTES DUPLEX AIR FILTER.
5. USE SPARE INSTRUMENT AIR VALVE IN MM-IR-7 TO ACTUATE SOLENOID VALVE DURING REFUELING.
6. INSTRUMENTATION ON THIS DWG. DOWNSTREAM OF THE PIPING ROOT VALVE CONNECTIONS HAS NOT BEEN FIELD VERIFIED.
7. △ - INDICATES REVISION LEVEL.
8. DELETED
9. VALVE SYMBOL MAY NOT BE REPRESENTATIVE OF INSTALLED COMPONENT TYPE, REFER TO VALVE LIST.

REV	DATE	DSGN	CHKD	CE	DESCRIPTION
12	5/19/03	JM	MPW	BCS	INCORP. CR 03-02736 REV 00
11	6/9/97	MPW	DWS	JPS	INCORP. MMOD 91-559 CA-0, DCN 04 & 05 DCR 96-13 DCN 00
10	1/31/96	BCS	MPW	RSG	INCORP. MMOD-95-570 CA-0
9	12/9/94	MPW	BCL	MHO	INCORP. MMOD-93-545 CA-0
8	6/28/94	MPW	DWS	BAW	INCORP. DCR 91-060 CA-0
7	12/3/92	BCL	MRB	GRM	REINCORP. DCR 90-004 CA-0
6	10/21/92	BCL	MRB	IW	INCORP. DCR 90-004 CA-0
5	7/18/92	MRB	JM	GRM	INCORP. MMOD 90-582, CA0
4	1/18/90	MRB	GPM	GRM	INCORP. DCR 86-320 CA10 RE-INCORP. ECA 99/114614A REVISED NOTE 2 DELETED NOTE 8 ADDED: F-8003 & F-8004 PER FP-20430
3	11/6/86	MRJ	WRD	RRC	INCORP. NCR 86/111A REVISED RELIEF VLV. TAG NO. AND ADDED MM-IR-6 PER UE&C P&ID, REMOVED SKD DRN. PIPING CONTINUATION FLAG REF'S PER ECA 19/108566A. REVISED SKD PIPING PER FOREIGN PRINT 20430, ADDED CONTINUATION FLAG COORD'S. AND NOTES 6, 7 & 8. ADDED NIPPLE AND CAPS TO SPARE INSTR. VLVS. PER AS-BUILT CONDITION.
2	6/27/86	JDM	VNK	RRC	INCORP ECA 99/114596A
1	4/25/86	JDM	DWS	WFD	RENUMBERED SA V8003-V8008 INCORP. ECA 99/114614A
0	3/4/86	CB	JDM	WFD	ISSUED FOR OPERATIONS

REF. DRAWING NO.	REV	TITLE
9763-F-500323	13	CONT. BLDG. INSTRUMENT AIR P & ID

FPL ENERGY Seabrook Station

INSTRUMENT AIR
CONTAINMENT BUILDING
DETAIL

PID- 1-IA-B20643

5/13/03

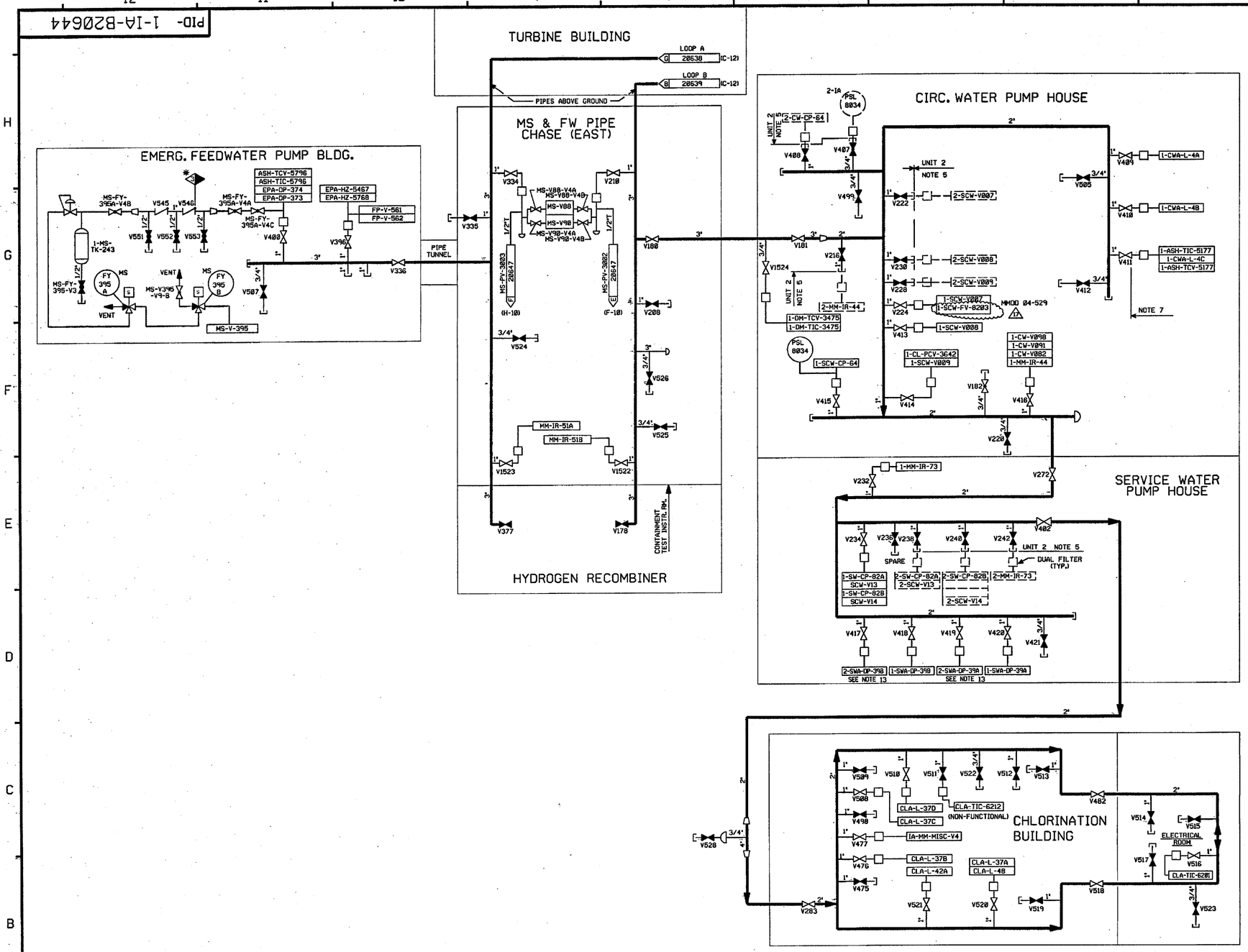

FOR P&ID REFERENCE DRAWINGS, SYMBOLS AND ABBREVIATIONS REFER TO DRAWINGS P&ID - LEGEND 1 AND P&ID - LEGEND 2

NOTES:

1. WORK THIS DRAWING WITH DRAWINGS 20636 THRU 20643, 20645, 20646 & 20647.
2. ALL LINES, VALVES, EQUIPMENT & INSTRUMENTS HAVE SYSTEM PREFIX IA, UNLESS NOTED OTHERWISE.
3. ☐ DENOTES DUAL AIR FILTER.
4. ALL PIPES, VALVES, EQUIPMENT, COMPONENTS AND INSTRUMENTS ARE SAFETY CLASS "NNS", UNLESS NOTED OTHERWISE.
5. UNIT 2 EQUIPMENT SHOWN IN PHANTOM HAS NOT BEEN INSTALLED. ASSOCIATED ROOT VALVES ARE CAPPED AND WILL BE USED FOR THIS FUTURE INSTALLATION.
6. △ INDICATES REVISION LEVEL.
7. DELETED
8. DELETED
9. DELETED
10. DELETED
11. ✱ DENOTES ANS SAFETY CLASS 3, NOT ASME CODE CLASS 3.
12. INSTRUMENTATION ON THIS DRAWING DOWNSTREAM OF PIPING ROOT VALVE CONNECTIONS HAS NOT BEEN VERIFIED.
13. AIR SUPPLY MAINTAINED TO DAMPERS TO SUPPORT THE SEABROOK STATION COMPENSATORY VENTILATION PLAN C-S-I-61085.
14. VALVE SYMBOLS MAY NOT BE REPRESENTATIVE OF INSTALLED COMPONENT TYPE, REFER TO VALVE LIST.

PORTIONS OF THIS DRAWING ARE

NUCLEAR SAFETY RELATED

REV	DATE	DSGN	CHKD	CE	DESCRIPTION
17	12/8/05	BCS	JM	DSA	INCORP. MMOD 04-529 DCN-00
16	8/12/03	JM	BCS	MPW	INCORP DCN 66-0035A AND CR 02-15128 REV.00
15	10/20/00	BCS	MPW	RWM	INCORP. MSE 00-269 REV 00 REINCORP DCR 98-023 CA-01
14	6/9/99	DWS	BCS	DJM	INCORP MMOD 970618 DCN#00
13	6/29/96	BCS	DWS	RSG	INCORP. DCR 91-26 CA-10
12	1/31/95	BCS	MPW	RSG	INCORP.MMOD 95-570 CA-0
11	12/9/94	BCL	MPW	MHO	INCORP MMOD 94-501 CA#0 AND MMOD 930545 CA#0
10	3/28/94	DWS	MPW	JCM	INCORP DCR 920812 CA#0
9	2/3/94	BCL	MPW	GRM	ADDED TAG NUMBERS PER FIELD WALKDOWN AND SPEC 46-1
8	10/9/91	GPM	FCB	RWM	INCORP. DCR 90-32 CA15
7	9/4/91	MRB	JM	DJM	INCORP. DCR 90-23 CA11
6	3/28/90	MRB	APL	JEV	INCORP. DCR 89-41 CA 15 AND MADE MINOR DRAFTING ENHANCEMENTS
5	3/24/90	MRB	APL	JEV	INCORP DCR 88-183 CA09 & DCR 86-433 CA09 DELETED NOTE 7
4	4/25/89	MRB	PAL	GPM	INCORPORATED DCR 88-105 CA0 REVISED: NOTES 1, 2 AND 4 ADDED: NOTE 8
3	11/23/87	DWS	BCL	RRC	DETAILS REMOVED FROM AUX AIR SUPPLY. DETAILS WILL BE SHOWN ON CONTROL LOOP DIA AS SPECIFIED BY ECA 85/113130F.
2	11/6/86	CSB	WRD	RRC	ADDED 500370 AS REF. DWG., DUAL FILTERS IN EFWPH TO CORRECT DRAFTING ERROR, 8000 VALVE NO'S TO UNTAGGED VALVES, DRAIN VALVE V524 SHOWN CLOSED, CONT. FLAG COORD., NOTES 5,6 & 7, P&ID REF. DWG. NOTE. INSTR. IN CHLORINATION BLDG. TO AGREE WITH DESIGN DWG., REMOVED PIPING LINE NO., UPDATE REF. DWG. REV. LEVEL, REMOVED DR DESIGNATION ON ALL UNUSED INSTR. AIR ROOT VALVES, PIPING LINE NUMBER.
1	6/24/86	DWS	VFS	RRC	INCORPORATED ECA 85/113130E
0	4/25/86	DBF	JDM	WFD	ISSUED FOR OPERATIONS. INCORP. ECA 85/113130C, 85/113144A, 85/112662C

REF. DRAWING NO.	REV	TITLE
9763-F-500370	2	CHLORINATION BLDG. - INSTR. PIPING
9763-F-500329	7	MS & FW PIPE ENCL. IA DISTR. P & ID.
9763-F-202105	11	COMP. AIR SYS. KEY PLAN P & ID
9763-F-202108	15	MISC. BLDG. COMP. AIR HDR. P & ID.

FPL ENERGY Seabrook Station

INSTRUMENT AIR MISCELLANEOUS BUILDING DETAIL

PID- 1-IA-B20644

12/08/05

PID- 1-IA-B20644

NHY PID20644.DGN1

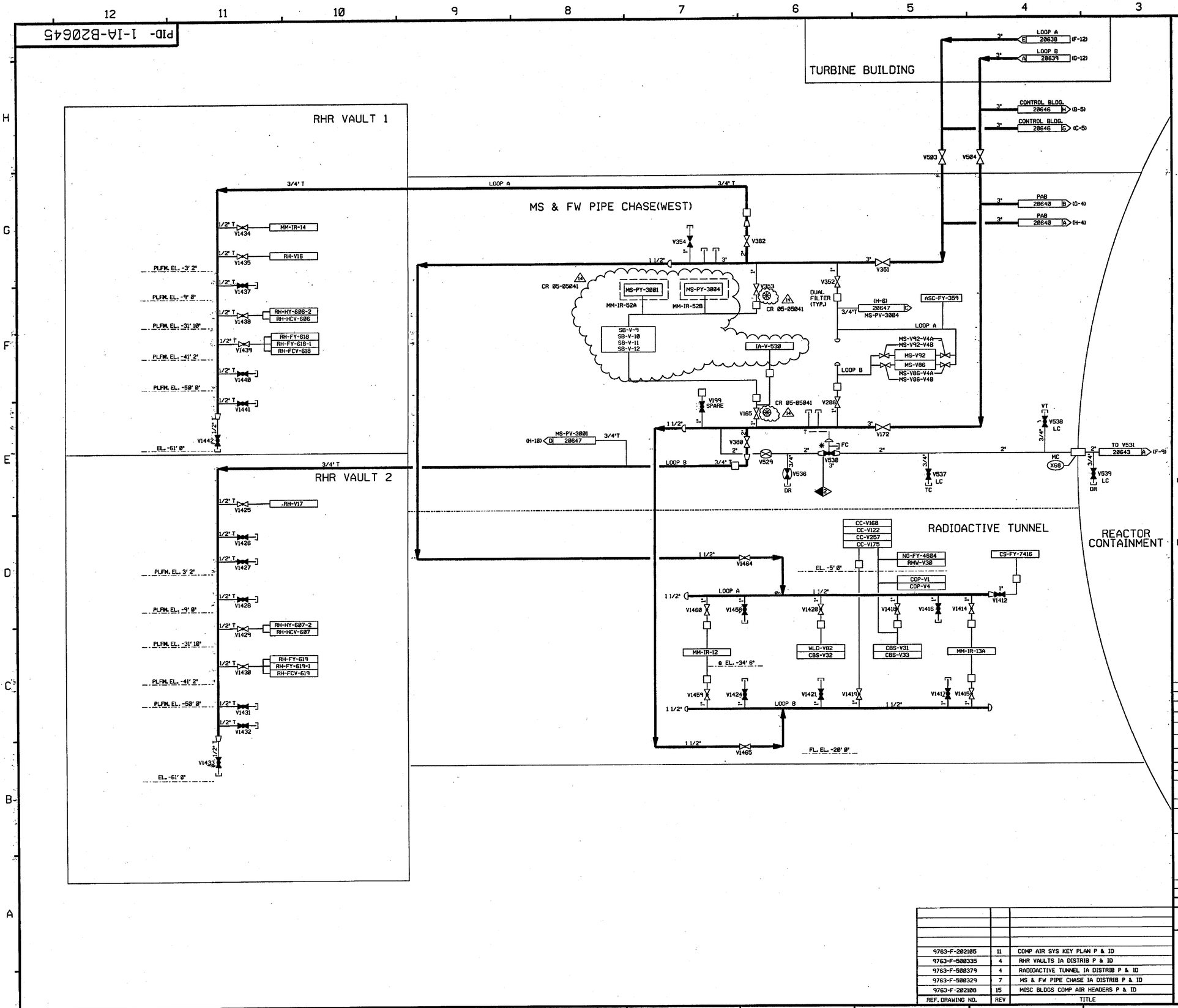

FOR P&ID REFERENCE DRAWINGS, SYMBOLS AND ABBREVIATIONS REFER TO DRAWINGS P&ID - LEGEND 1 AND P&ID - LEGEND 2

NOTES:

1. WORK THIS DRAWING WITH DRAWINGS 20636 THRU 20644, 20646 & 20647.
2. ALL LINES, EQUIPMENT, COMPONENTS AND INSTRUMENTS HAVE SYSTEM PREFIX IA, UNLESS NOTED OTHERWISE.
3. ☐ DENOTES DUAL AIR FILTER.
4. ALL LINES, EQUIPMENT, COMPONENTS AND INSTRUMENTS ARE SAFETY CLASS NNS, UNLESS NOTED OTHERWISE.
5. INSTRUMENTATION ON THIS DRAWING DOWNSTREAM OF PIPING ROOT VALVE CONNECTIONS HAS NOT BEEN VERIFIED, UNLESS NOTED BY ⊛. REFER TO DWG 1-NHY-550013 FOR VERIFIED INSTRUMENT DETAILS.
6. △ INDICATES REVISION LEVEL
7. ✱ INDICATES VALVES SUPPLIED BY WESTINGHOUSE.
8. VENTS, DRAINS AND TEST CONNECTION CODE BREAKS ARE AT THE DOWNSTREAM END OF THE OUTER ISOLATION VALVE PER 1-NHY-605111, UNLESS NOTED OTHERWISE.
9. DELETED
10. DELETED
11. VALVE SYMBOL MAY NOT BE REPRESENTATIVE OF INSTALLED COMPONENT TYPE, REFER TO VALVE LIST.

REV	DATE	DSGN	CHKD	CE	DESCRIPTION
14	1/23/06	BCS	JM	TJM	REINCORP CR 05-05041 REV.0
13	6/7/05	BCS	JM	RRB	INCORP CR 05-05041 REV.0
12	1/31/96	BCS	MPW	RSG	INCORP MMOD 95-570 CA0
11	6/12/95	BCL	DWS	DJM	INCORP MMOD 94-570 CA0
10	12/9/94	BCL	MPW	MHO	REINCORP.DCR 900004 CA*0 AND INCORP MMOD 930545 CA*0
9	7/18/94	MPW	BCL	JCM	INCORP DCR 86-420 CA 0 AND REINCORP. DCR 90-004 CA 0
8	2/2/94	BCL	MRB	GRM	ADDED TAG NUMBERS PER FIELD WALKDOWN AND SPEC 46-1
7	4/5/93	MRB	BCL	JM	INCORP MMOD 92-553 CA0
6	10/21/91	MRB	BCL	IW	INCORP DCR 90-004 CA0
5	10/9/91	MRB	FCB	RWM	INCORP DCR 90-32 CA0 REVISED NOTE 4 PER ENG DSGN STD. 31700 SEC. 3.0.
4	01/18/90	MRB	GPM	GRM	INCORP: DCR-86-320 CA10
3	11/23/87	DWS	BCL	RRC	DETAILS REMOVED FROM AUX AIR SUPPLY, DETAILS WILL BE SHOWN ON CONTROL LOOP DIAG. AS SPECIFIED BY ECA 05-113130F.
2	11/14/86	MRJ	PAL	RRC	ADDED NOTE 6 & CHANGED NOTE 5. ADDED CONT FLAG COORD'S, V0834 THRU V0841, NIPPLES & CAPS, ABANDONED CONN'S, ADDITIONAL DUAL FILTERS AND AIR USERS. REVISED LOC OF TAKE-OFFS & TUBING SIZES PER AS-INSTALLED CONDITIONS. INCORP ECA 05/113130F & 74/1071555A, CORRECTED DRAFTING ERRORS.
1	6/23/86	DBF	VNK	RRC	INCORPORATED ECA 05/113130E
0	4/25/86	DBF	JDM	WFD	ISSUED FOR OPERATIONS INCORP ECA 05/113144A 05/113130E 80/100034 99/113100

REF. DRAWING NO.	REV	TITLE
9763-F-202105	11	COMP AIR SYS KEY PLAN P & ID
9763-F-500335	4	RHR VAULTS IA DISTRIB P & ID
9763-F-500379	4	RADIOACTIVE TUNNEL IA DISTRIB P & ID
9763-F-500329	7	MS & FW PIPE CHASE IA DISTRIB P & ID
9763-F-202108	15	MISC BLDGS COMP AIR HEADERS P & ID

FPL ENERGY Seabrook Station

INSTRUMENT AIR MISCELLANEOUS BUILDING DETAILS

PID- 1-IA-B20645

01/19/06

PID- 1-IA-B20646

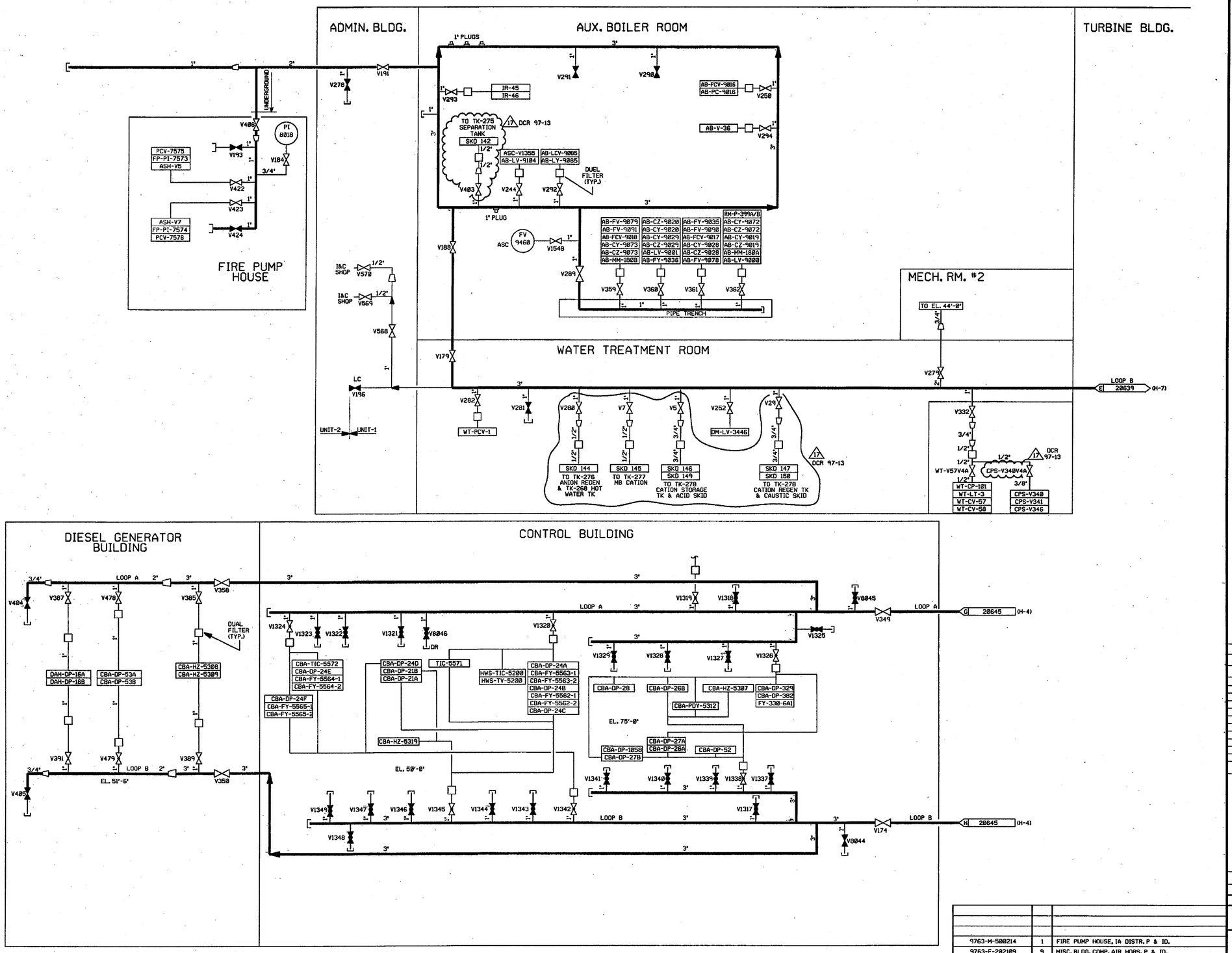

FOR P&ID REFERENCE DRAWINGS, SYMBOLS AND ABBREVIATIONS REFER TO DRAWINGS P&ID - LEGEND 1 AND P&ID - LEGEND 2

NOTES:
1. WORK THIS DRAWING WITH DRAWINGS 20636 THRU 20645.
2. ALL LINES, EQUIPMENT, COMPONENTS AND INSTRUMENTS HAVE SYSTEM PREFIX IA, UNLESS NOTED OTHERWISE.
3. ☐ DENOTES DUAL AIR FILTER.
4. ALL LINES, EQUIPMENT, COMPONENTS AND INSTRUMENTS ARE SAFETY CLASS NNS, UNLESS NOTED OTHERWISE.
5. INSTRUMENTATION ON THIS DWG DOWNSTREAM OF THE PIPING ROOT VALVE CONNECTION HAS NOT BEEN FIELD VERIFIED.
6. △ INDICATES REVISION LEVEL
7. VALVE SYMBOL MAY NOT BE REPRESENTATIVE OF INSTALLED COMPONENT TYPE, REFER TO VALVE LIST.

REV	DATE	DSGN	CHKD	CE	DESCRIPTION
17	4/19/06	BCS	JM	PGT	INCORP DCR 97-13 DCN-00,55,98,222
16	4/19/04	BCS	JM	SAK	PARTIAL INCORP DCR 97-13 DCN-55
15	10/10/01	BCS	JM	JCM	INCORP MMOD 01-0542 DCN#01
14	3/24/00	DWS	BCS	JMS	INCORP DCR 980039 DCN#00
13	3/7/00	MPW	DWS	DJM	INCORP DCR 970012 DCN 20
12	2/11/00	DWS	BCS	MPW	PARTIAL INCORP DCR 980039 DCN#00
11	5/27/99	MPW	BCS	DJM	INCORP DCR 97-12 DCN 00
10	11/17/98	DWS	BCS	RSG	INCORP MMOD 980639 DCN#00
9	11/7/97	MPW	BCS	RCP	INCORP DCR 94-51 DCN 03
8	8/3/94	BCS	MPW	RSG	INCORP MMOD 95-570 CA-0
7	8/3/94	DWS	BCL	WFZ	INCORP DCR 930007 CA#0 & 1
6	5/28/94	BCL	DWS	JCM	INCORP MMOD 93-564 CA-0,04
5	4/28/92	MRB	BCL	RRB	INCORP MMOD 91-515 C0
4	12/15/89	MRB	PAL	TW	INCORPORATED DCR 87-405 CA
3	9/29/89	MRB	APL	JWS	INCORPORATED DCR 86-789 CA 21 REVISED: NOTE 4
2	11/12/86	WOS	WRD	RRC	REMOVED VALVES V388, 386, 390, 392, 508, 501-NOT INSTALLED. ADDED VALVES V8044, 8045, 8046 & CAPS PER ASBUILT CONDITION. DELETED NIPPLE & CAP FROM VALVE 292 & 291. ADDED PLUG CONN'S AS REQ'D TO 2" HEADER IN AUX BOILER ROOM. DELETED NOTE: ALL VALVES TO BE LOCATED IN DIESEL GEN BLDG. ADDED INDICATION FOR VALVES TO BE NORMALLY CLOSED FOR V1327, 1328, 1331, 1344, 1321, 1339, 1322, 1323 & 1329. REVISED VALVES V388 & V386 TO GATE VALVES. REVISED REF DWG REVISIONS. ADDED DWG COORD'S REVISED INSTR NO TO AB-LV-9000. ADDED DESIGNATION FOR UNDERGROUND PIPING. REVISED USER ROUTING FROM D.F.'S. ADDED D.F. & DELETED D.F. AS REQUIRED.
1	8/23/86	DBF	VNK	RRC	VALVES CHANGED TO GATE & ADDED CAP PER WALKDOWN.
0	4/25/86	DBF	JDM	WFD	ISSUED FOR OPERATIONS. INCORP. ECA 19/112501A

REF. DRAWING NO.	REV	TITLE
9763-M-500214	1	FIRE PUMP HOUSE, IA DISTR. P & ID.
9763-F-202109	9	MISC. BLDG. COMP. AIR HDRS. P & ID.
9763-C-500324	7	CONTROL BLDG. INSTR. AIR DISTRIB P & ID
9763-F-202105	11	COMP. AIR SYS. KEY PLAN P & ID.
9763-M-500326	6	DIESEL GEN. BLDG. IA P & ID.
9763-C-500330	9	ADMIN. & SERV. BLDG. AUX. BLR. & WTR TRT

FPL ENERGY Seabrook Station

INSTRUMENT AIR
MISCELLANEOUS BUILDINGS
DETAILS

PID- 1-IA-B20646

04/13/05

PID- 1-IA-B20647

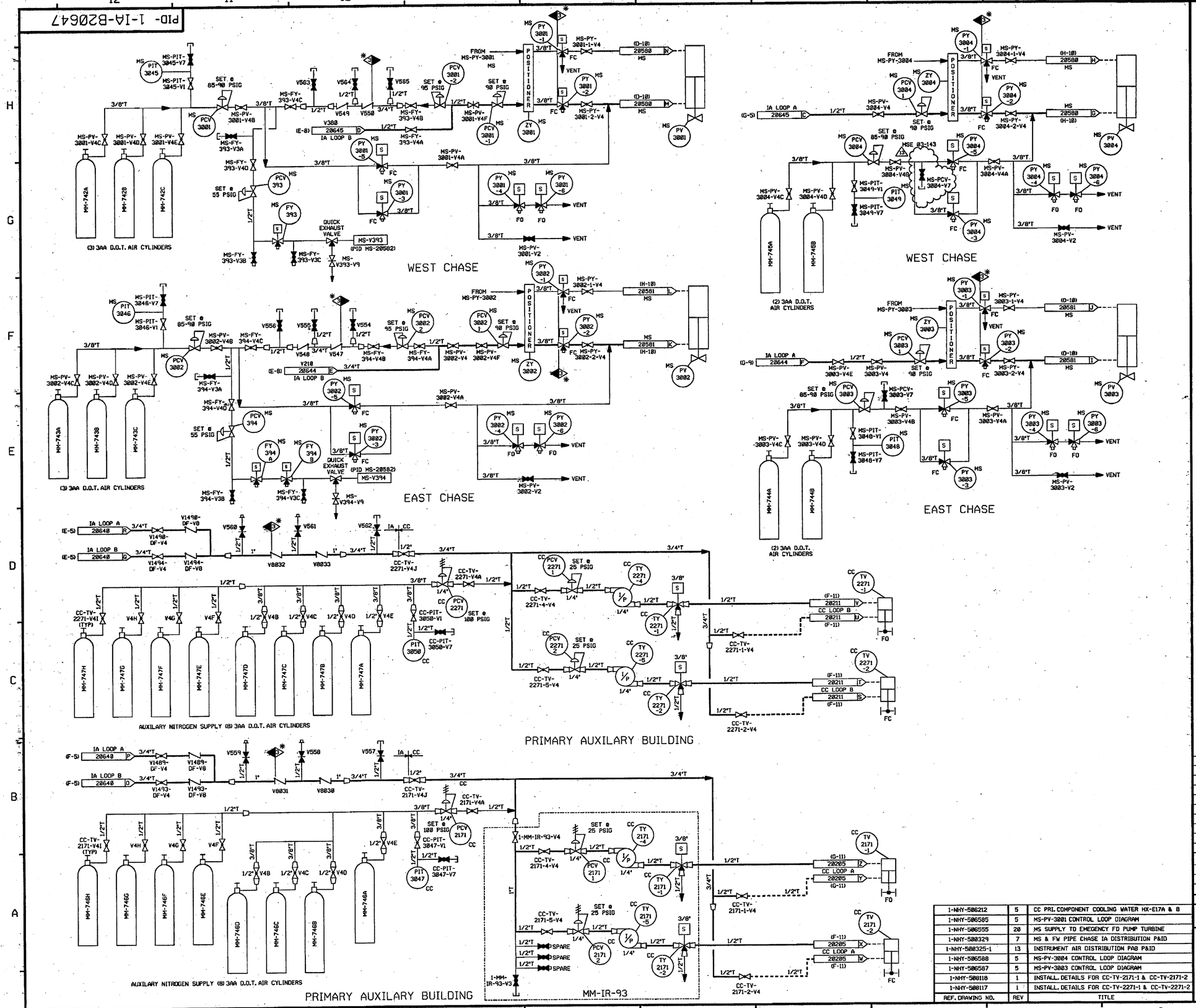

FOR P&ID REFERENCE DRAWINGS,SYMBOLS AND ABBREVIATIONS REFER TO DRAWING P&ID-LEGEND 1 AND P&ID-LEGEND 2

NOTES:

1. ALL LINES, VALVES, EQUIPMENT & INSTRUMENTS HAVE SYSTEM PREFIX IA, UNLESS NOTED OTHERWISE.
2. ALL PIPES, VALVES, EQUIPMENT, COMPONENTS AND INSTRUMENTS ARE SAFETY CLASS "NNS", UNLESS NOTED OTHERWISE.
3. WORK THIS DRAWING WITH DRAWINGS 20636 THRU 20646.
4. ✱ DENOTES ANS SAFETY CLASS 3, NOT ASME CODE CLASS 3.
5. △ INDICATES REVISION LEVEL.

PORTIONS OF THIS DRAWING ARE

NUCLEAR SAFETY RELATED

REV	DATE	DSGN	CHKD	CE	DESCRIPTION
13	2-21-07	BCS	JM	PEB	INCORP. MSE 03-143 REV 00
12	12/21/05	JM	BCS	JC	INCORP. CR 05-13486 REV 00
11	9/16/04	BCS	JM	MRJ	PARTIAL INCORP. MSE 03-143 REV 00
10	10/11/03	MPW	MAP	RRB	INCORP. MSE 02-286 REV 00
9	11/15/02	JM	BCS	RRB	INCORP. CR 01-10788 REV 00 & CR 02-00438 REV 00
8	6/27/02	BCS	MPW	PEB	INCORP. DCR 01-017 DCN 07
7	5/25/02	MPW	BCS	RRB	INCORP. DCR 01-017 DCN 06
6	5/14/02	MPW	JM	MAP	INCORP. DCR 01-017 DCN 00
5	5/15/01	BCS	MPW	RPW	INCORP. MMOD 99-510 DCN 00 & 01
4	6/02/98	DRL	BCS	JWS	INCORP. MMOD 99-550 CA 01 & 02
3	6/20/97	MPW	DWS	BAW	INCORP. MMOD 96-550 CA 01 & DCR 97-004 DCN 00
2	10/30/96	MPW	BCS	VWS	INCORP. MMOD 96-550 CA 0
1	11/13/95	BCL	MPW	RMW	INCORP. DCR 94-029 CA 6
0	11/29/94	—	MPW	MHD	ISSUED FOR OPERATIONS. MMOD 93-545 CA 0

REF. DRAWING NO.	REV	TITLE
1-NHY-506212	5	CC PRI. COMPONENT COOLING WATER HX-E17A & B
1-NHY-506585	5	MS-PV-3001 CONTROL LOOP DIAGRAM
1-NHY-506555	20	MS SUPPLY TO EMEGENCY FD PUMP TURBINE
1-NHY-500329	7	MS & FW PIPE CHASE IA DISTRIBUTION P&ID
1-NHY-500325-1	13	INSTRUMENT AIR DISTRIBUTION PAB P&ID
1-NHY-506588	5	MS-PV-3004 CONTROL LOOP DIAGRAM
1-NHY-506587	5	MS-PV-3003 CONTROL LOOP DIAGRAM
1-NHY-508118	1	INSTALL. DETAILS FOR CC-TV-2171-1 & CC-TV-2171-2
1-NHY-508117	1	INSTALL. DETAILS FOR CC-TV-2271-1 & CC-TV-2271-2

FPL ENERGY Seabrook Station

INSTRUMENT AIR BOTTLE SUPPLY

PID- 1-IA-B20647

02/09/07

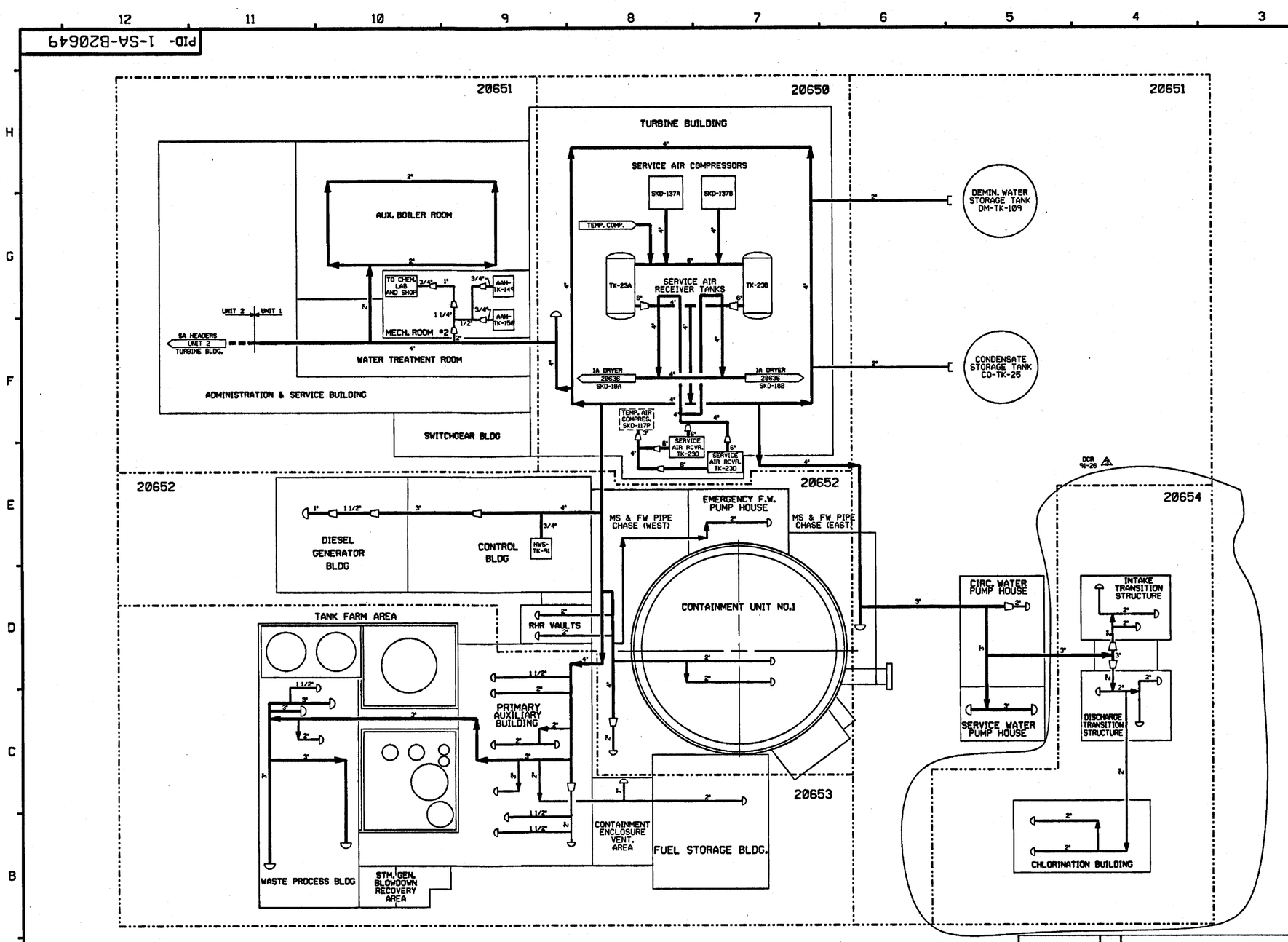

NOTES :

1. WORK THIS DRAWING WITH DRAWINGS 20650, 20651, 20652, 20653 & 20654 (DCR 91-26)
2. ALL LINES, EQUIPMENT, COMPONENTS AND INSTRUMENTS HAVE SYSTEM PREFIX SA, UNLESS NOTED OTHERWISE.
3. △ INDICATES REVISION LEVEL.

REF. DRAWING NO.	REV	TITLE
9763-F-884989	7	SERVICE AIR P & ID
9763-F-202109	9	COMP. AIR HEADERS, MISC. BLDGS. P & ID
9763-F-202108	15	COMP. AIR HEADERS, MISC. BLDGS. P & ID
9763-F-202107	12	COMP. AIR HEADERS, TURB. BLDG. P & ID
9763-F-202106	11	COMPRESSED AIR SYS. P & ID
9763-F-202105	11	COMPRESSED AIR SYS. KEY PLAN P & ID

REV	DATE	DSGN	DRAWN	CHKD	CDE	SES	DESCRIPTION
3	8/29/96	BCS	—	DWS	MPW	ESG	INCORP DCR 91-26 CA-81
2	3/24/94	DWS	—	BCL	MPW	WFZ	INCORP DCR 930016 CA#8 & 1
1	1/28/87	WDS	GPG	WRD	BCL	RRC	REVISED REF. DWG. REVISIONS. ADDED NOTE 3. REVISED PER LATEST SYS. DWGS.
0	3/21/86	TAK	MRB	JDM	DFM	WFD	ISSUED FOR OPERATIONS

North Atlantic Energy Service Corporation

SEABROOK STATION

SERVICE AIR SYSTEM OVERVIEW

PID- 1-SA-B20649

02/14/94

PID- 1-SA-B20650

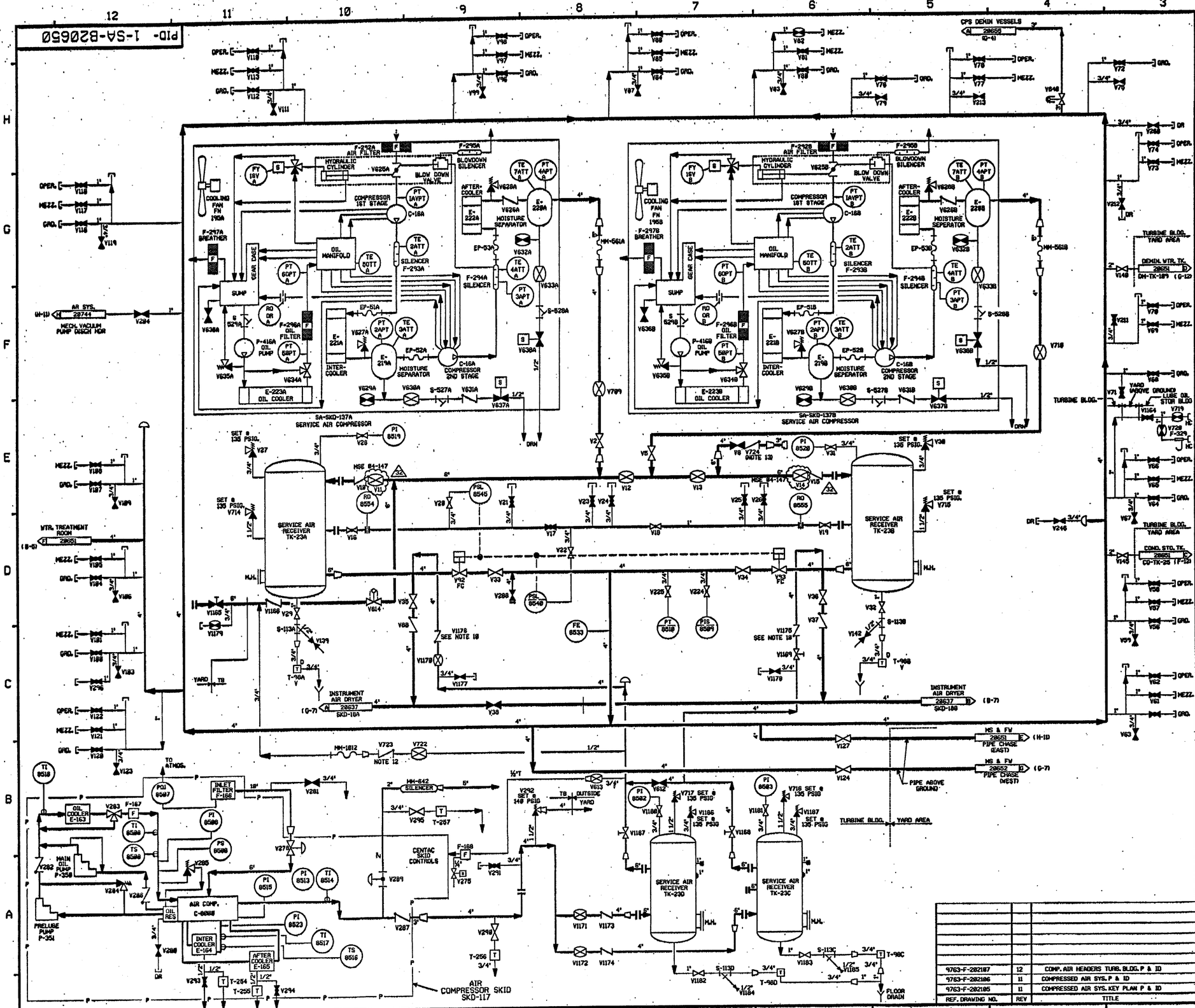

FOR P&ID REFERENCE DRAWINGS, SYMBOLS AND ABBREVIATIONS REFER TO DRAWINGS P&ID - LEGEND 1 AND P&ID - LEGEND 2

NOTES:

1. WORK THIS DRAWING WITH DRAWINGS 28641, 28651, 28652 & 28653.
2. ALL LINES, EQUIPMENT, COMPONENTS AND INSTRUMENTS HAVE SYSTEM PREFIX SA, UNLESS NOTED OTHERWISE.
3. ALL LINES, EQUIPMENT, COMPONENTS AND INSTRUMENTS ARE SAFETY CLASS NNS UNLESS NOTED OTHERWISE.
4. INSTRUMENT REFERENCES:
   - (A) TO SCC-V126, FV-7868 (DWG. SCC-28878)
   - (B) TO SCC-V124, FV-7861 (DWG. SCC-28878)
   - (C) TO SCC-V132, FV-7862 (DWG. SCC-28878).
5. ALL PIPING RUNNING BETWEEN BUILDINGS OR TO OUTSIDE EQUIPMENT IS BELOW GROUND EXCEPT AS NOTED.
6. △ INDICATES REVISION LEVEL.
7. DELETED
8. PIPE CAPS OR QUICK DISCONNECTS MAY BE INSTALLED ON SERVICE AIR STATIONS AS DEEMED NECESSARY BY STATION STAFF.
9. DELETED
10. INTERNALS OF CHECK VALVES, SA-V1175 & 1176 HAVE BEEN REMOVED.
11. VALVE SYMBOL MAY NOT BE REPRESENTATIVE OF INSTALLED COMPONENT TYPE, REFER TO VALVE LIST.
12. EXCESS FLOW CHECK VALVE 1-SA-V-723 SEATS IF FLOW EXCEEDS 120 SCFM @ 100 PSIG INLET PRESSURE.
13. CHECK VALVE HAS 0.285" HOLE IN DISC TO SUPPORT AUTO START OF PORTABLE COMPRESSOR.

REV	DATE	DSGN	CHKD	CE	DESCRIPTION
32	10-6-04	BCS	JM	EEB	PARTIAL INCORP. MMOD 84-147 DCN 88
31	7/27/86	BCS	JM	DEA	INCORP. MSE 86-846 DCN-88
30	12/15/85	JM	BCS	DEA	INCORP. MMOD 85-529 DCN 88 PARTIAL INCORP. MSE 84-147 REV 83
29	11/17/85	BCS	JM	DEA	INCORP. MSE 85-831 REV 88
28	10/05/85	BCS	JM	RAB	INCORP. MSE 85-135 REV.88 & REMOVED INCOMPLETE ITEM #1 PER SA OF PROCED. EDM8442.01 &83
27	4/19/85	BCS	JM	RAB	INCORP. DCR-97-13 DCN-88, 84; MMOD 98-678 DCN-88; PARTIAL INCORP. MSE 84-147 REV 88
26	2/27/84	JM	BCS	SAK	INCORP. MSE 83-8188 REV 88, PARTIAL INCORP. DCR 97-13, DCN-88
25	11/3/83	JM	BCS	MR	INCORP. MSE 83-8285 REV 88
24	8/18/83	MPW	JM	JGC	INCORP. MMOD 81-537 DCN 88
23	7/14/83	BCS	JM	JDC	PARTIAL INCORP. MMOD 81-537 DCN 88
22	6/17/83	MPW	JM	JC	PARTIAL INCORP. MMOD 81-537 DCN 88
21	12/15/82	BCS	JM	DEA	INCORP. MSE 82-8216 REV.0
20	5/25/82	BCS	MPW	RAB	INCORP. MSE 80-8247 REV.0, CR 81-893449
19	9/15/80	BCS	MPW	JCM	INCORP. MMOD 99-626 DCN-88
18	8/22/88	BCS	DWS	JCM	PARTIAL INCORP. MMOD 99-626 DCN-88
17	1/28/97	BCS	DWS	RWM	INCORP. MMOD 96-669 CA-8
16	1/31/96	BCS	MPW	RSG	INCORP. MMOD 95-578 CA-8
15	9/14/95	BCL	MPW	JCM	INCORP. MMOD 95-552 CA-8
14	1/17/95	BCL	DWS	WFZ	INCORP. DCR 93-16 CA-21
13	3/24/93	MRB	BCL	WFZ	INCORP. DCR 93-16 CA&81
12	3/24/93	BCL	MRB	JCM	REINCORP. DCR-91-31, CA-8
11	2/12/93	BCL	MRB	JCM	INCORP. DCR-91-31, CA-8
10	1/25/93	BCL	MRB	JCM	PARTIAL INCORP. DCR-91-31, CA-8
9	5/11/92	MRB	BCL	GPM	INCORP. MMOD 90-582 CA88
8	7/18/91	MRB	JM	GRM	INCORP. MMOD 90-582 CA88
7	11/7/88	GPM	MRB	RRC	INCORP ECA 74/1131738 REVISED NOTE 3 ADDED FILTERS 8888, 8881 & 8882 PER FP 28441, V284 PER UE & C P & ID 28293, NOTE 4 & INCOMPLETE ITEM 1. CHANGED VALVES V1168 & V1181 FROM GATE TO GLOBE VALVES PER ECA 99/117267E. CHANGED VALVES V293, V294 & V291 FROM GATE TO GLOBE VALVES AND CORRECTED VALVE TAG NO. PER ECA 99/1882C.
6	8/26/87	MPW	BCL	RRC	INCORP DCR 87-034.
5	6/1/87	MPW	DWS	VWS	INCORP ECA 19/1185678
0	3/21/86	TAK	JDM	WFD	ISSUED FOR OPERATIONS & INCORP. ECA 74/1131738

REF. DRAWING NO.	REV	TITLE
9763-F-282187	12	COMP. AIR HEADERS TURB. BLDG. P & ID
9763-F-282186	11	COMPRESSED AIR SYS. P & ID
9763-F-282185	11	COMPRESSED AIR SYS. KEY PLAN P & ID

FPL ENERGY Seabrook Station

SERVICE AIR SYSTEM
TURBINE BUILDING
DETAIL

PID- 1-SA-B20650

10/04/06

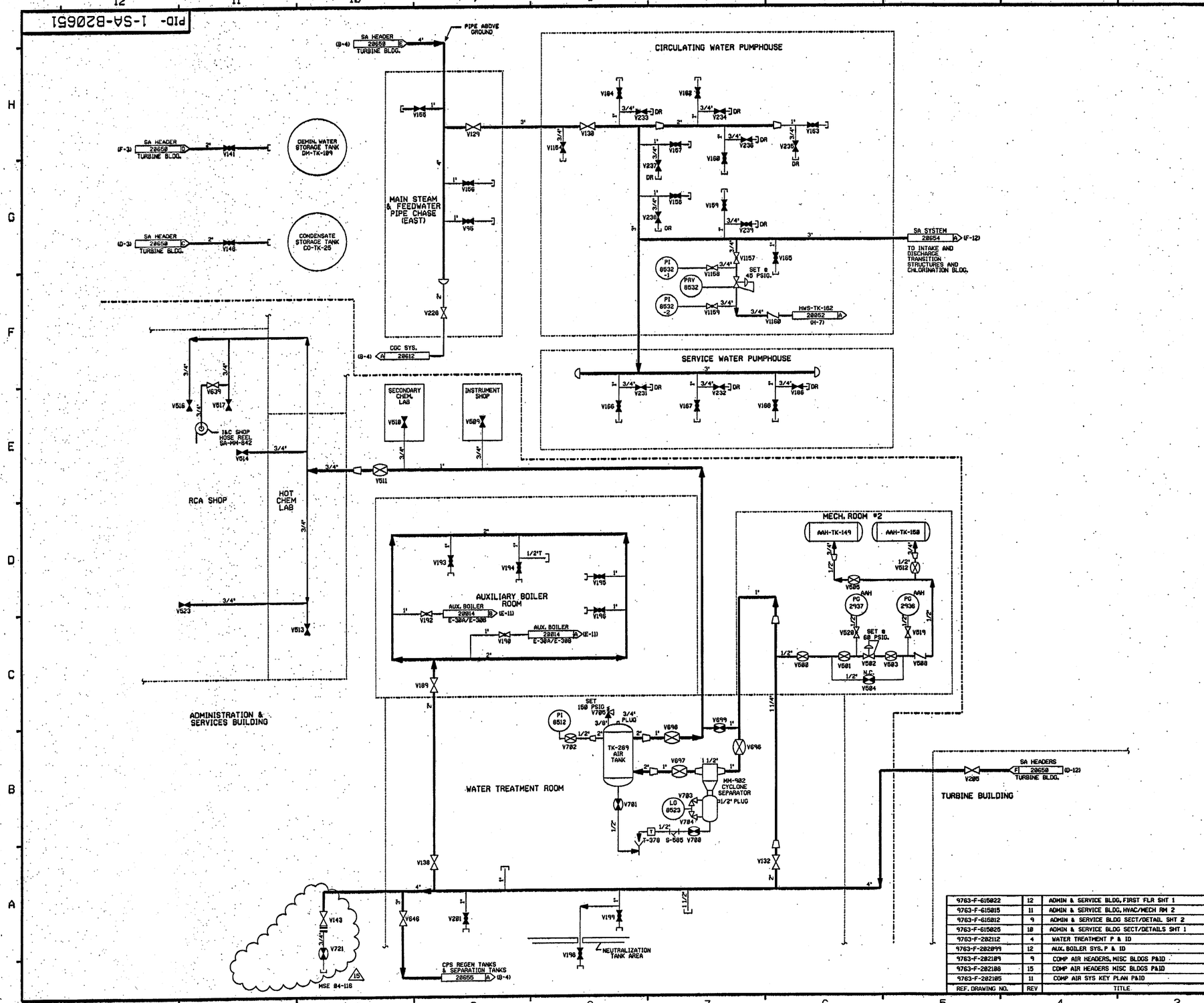

FOR P&ID REFERENCE DRAWINGS, SYMBOLS AND ABBREVIATIONS REFER TO DRAWINGS P&ID - LEGEND 1 AND P&ID - LEGEND 2

NOTES:

1. WORK THIS DRAWING WITH DRAWINGS 20649, 20650, 20652, 20653 & 20654.
2. ALL LINES, EQUIPMENT, COMPONENTS AND INSTRUMENTS HAVE SYSTEM PREFIX SA, UNLESS NOTED OTHERWISE.
3. ALL PIPING IS SAFETY CLASS NNS UNLESS NOTED OTHERWISE.
4. ALL PIPING RUNNING BETWEEN BUILDINGS OR TO OUTSIDE EQUIPMENT IS BELOW GROUND EXCEPT AS NOTED.
5. △ INDICATES REVISION LEVEL.
6. PIPE CAPS OR QUICK DISCONNECTS MAY BE INSTALLED ON SERVICE AIR STATIONS AS DEEMED NECESSARY BY STATION STAFF.
7. VALVE SYMBOL MAY NOT BE REPRESENTATIVE OF INSTALLED COMPONENT TYPE, REFER TO THE VALVE LIST.

REV	DATE	DSGN	CHKD	CE	DESCRIPTION
15	9/6/05	BCS	JM	DSA	INCORP MSE 84-116 REV. 0
14	4/20/05	BCS	JM	PAL	INCORP DCR 97-13 DCN 00, 35, 77
13	2/27/04	JM	BCS	SAK	PARTIAL INCORP DCR 97-13 DCN 77
12	7/27/99	MPW	BCS	DJM	INCORP DCR 97-12 DCN 00
11	10/7/98	DWS	BCS	RSG	INCORP MMOD 970528 DCN*00 & 03
10	11/7/97	MPW	BCS	RCP	INCORP DCR 94-51 DCN 04
9	1/31/96	BCS	MPW	RSG	INCORP MMOD 95-570 CA0
8	8/3/94	DWS	BCL	WFZ	INCORP DCR 930087 CA*10
7	5/28/94	BCL	MPW	JCM	INCORP MMOD 93-564 CA0
6	8/28/92	MRB	BCL	GPM	INCORP MMOD 91-622 CA0
5	7/21/92	DWS	MRB	WFZ	INCORP DCR 900052 CA*0, 01
4	4/23/92	RMC	DWS	JEV	INCORP DCR 91-26 CA5 AND MMOD'S 91-515 CA0 & 91-622 CA0
3	6/1/87	MPW	DWS	VWS	INCORP ECA 19/1185678
2	11/21/86	FJR	PAL	RRC	ADDED: REF DWGS, BLDG BOUNDARY & CONT FLAG COORD'S. CORRECTED DRAFTING ERRORS PER UE&C ERECTION ISO & P&ID.
1	3/26/86	TAK	JDM	WFD	DELETED V8001 PER DR 82/303A
0	3/21/86	TAK	JDM	WFD	ISSUED FOR OPERATIONS & INCORP. ECA 99/108830A & NCR 82/222

REF. DRAWING NO.	REV	TITLE
9763-F-615022	12	ADMIN & SERVICE BLDG, FIRST FLR SHT 1
9763-F-615015	11	ADMIN & SERVICE BLDG, HVAC/MECH RM 2
9763-F-615012	9	ADMIN & SERVICE BLDG SECT/DETAIL SHT 2
9763-F-615025	10	ADMIN & SERVICE BLDG SECT/DETAILS SHT 1
9763-F-202112	4	WATER TREATMENT P & ID
9763-F-202099	12	AUX. BOILER SYS. P & ID
9763-F-202109	9	COMP AIR HEADERS, MISC BLDGS P&ID
9763-F-202108	15	COMP AIR HEADERS MISC BLDGS P&ID
9763-F-202105	11	COMP AIR SYS KEY PLAN P&ID

FPL ENERGY Seabrook Station

SERVICE AIR SYSTEM
MISC. BUILDINGS
DETAIL

PID- 1-SA-B20651

09/02/05

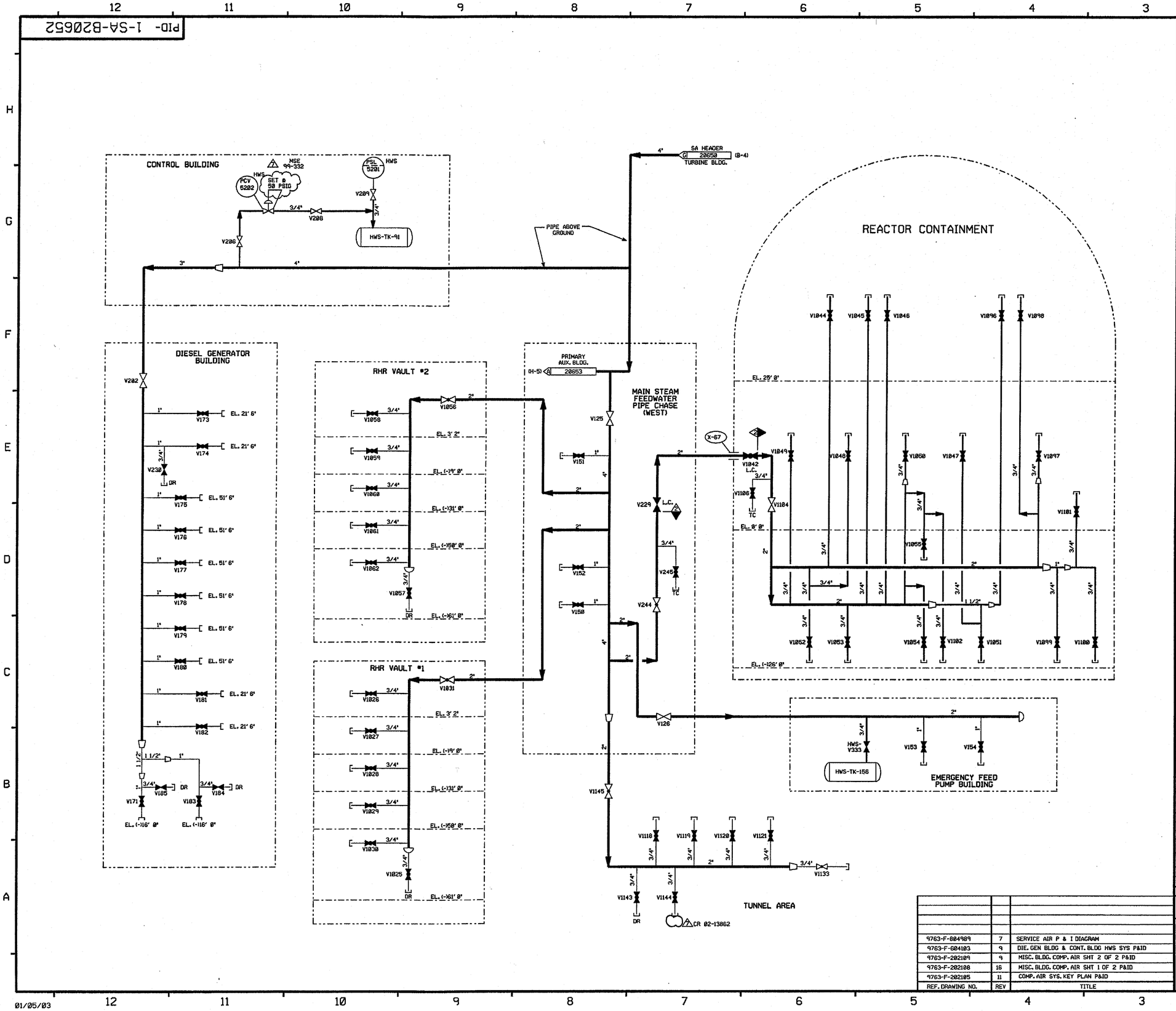

FOR P&ID REFERENCE DRAWING, SYMBOLS AND ABBREVIATIONS REFER TO DRAWINGS P&ID - LEGEND 1 AND P&ID - LEGEND 2.

NOTES:

1. WORK THIS DRAWING WITH DRAWINGS 20649, 20650, 20651 & 20653.
2. ALL LINES, EQUIPMENT, COMPONENTS AND INSTRUMENTS HAVE SYSTEM PREFIX SA, UNLESS NOTED OTHERWISE.
3. ALL PIPING IS SAFETY CLASS NNS UNLESS NOTED OTHERWISE.
4. ALL PIPING RUNNING BETWEEN BUILDINGS OR TO OUTSIDE EQUIPMENT IS BELOW GROUND EXCEPT AS NOTED.
5. △ INDICATES REVISION LEVEL.
6. DELETED.
7. PIPE CAPS OR QUICK DISCONNECTS MAY BE INSTALLED ON SERVICE AIR STATIONS AS DEEMED NECESSARY BY STATION STAFF.
8. VALVE SYMBOL MAY NOT BE REPRESENTATIVE OF INSTALLED COMPONENT TYPE, REFER TO VALVE LIST.

PORTIONS OF THIS DRAWING ARE

NUCLEAR SAFETY RELATED

REV	DATE	DSGN	CHKD	CE	DESCRIPTION
7	2/5/03	BCS	MPW	[illegible]	INCORPORATED: MSE 99-332 REV. 0, 1 & CR 02-13862
6	6/31/96	BCS	MPW	RSG	INCORPORATED: MMOD 95-570 CA0
5	5/11/92	MRB	BCL	GPM	INCORPORATED: MMOD 91-622 CA0
4	9/11/90	MRB	HP	RRC	INCORPORATED: MMOD 90-595 CA00
3	6/1/87	MPW	DWS	RRC	ADDED ERECTION ISO NO & CONT LOCATION AND INCORP ECA 19/1185678.
2	10/24/86	PAL	WRD	PHH	DELETED NOTE 6, UPDATED REF DWG REV'S. ADDED ZONE LOC TO FLAG.
1	6/16/86	TAK	MPW	RRC	REVISED CHANGE ITEM NO.1 PER 202108 REV 16
0	3/21/86	TAK	JOM	WFD	ISSUED FOR OPERATIONS

REF. DRAWING NO.	REV	TITLE
9763-F-804989	7	SERVICE AIR P & I DIAGRAM
9763-F-604103	9	DIE. GEN BLDG & CONT. BLDG HWS SYS P&ID
9763-F-202109	9	MISC. BLDG. COMP. AIR SHT 2 OF 2 P&ID
9763-F-202108	16	MISC. BLDG. COMP. AIR SHT 1 OF 2 P&ID
9763-F-202105	11	COMP. AIR SYS. KEY PLAN P&ID

FPL ENERGY Seabrook Station

SERVICE AIR SYSTEM
MISC. BUILDINGS
DETAIL

PID- 1-SA-B20652

01/05/03

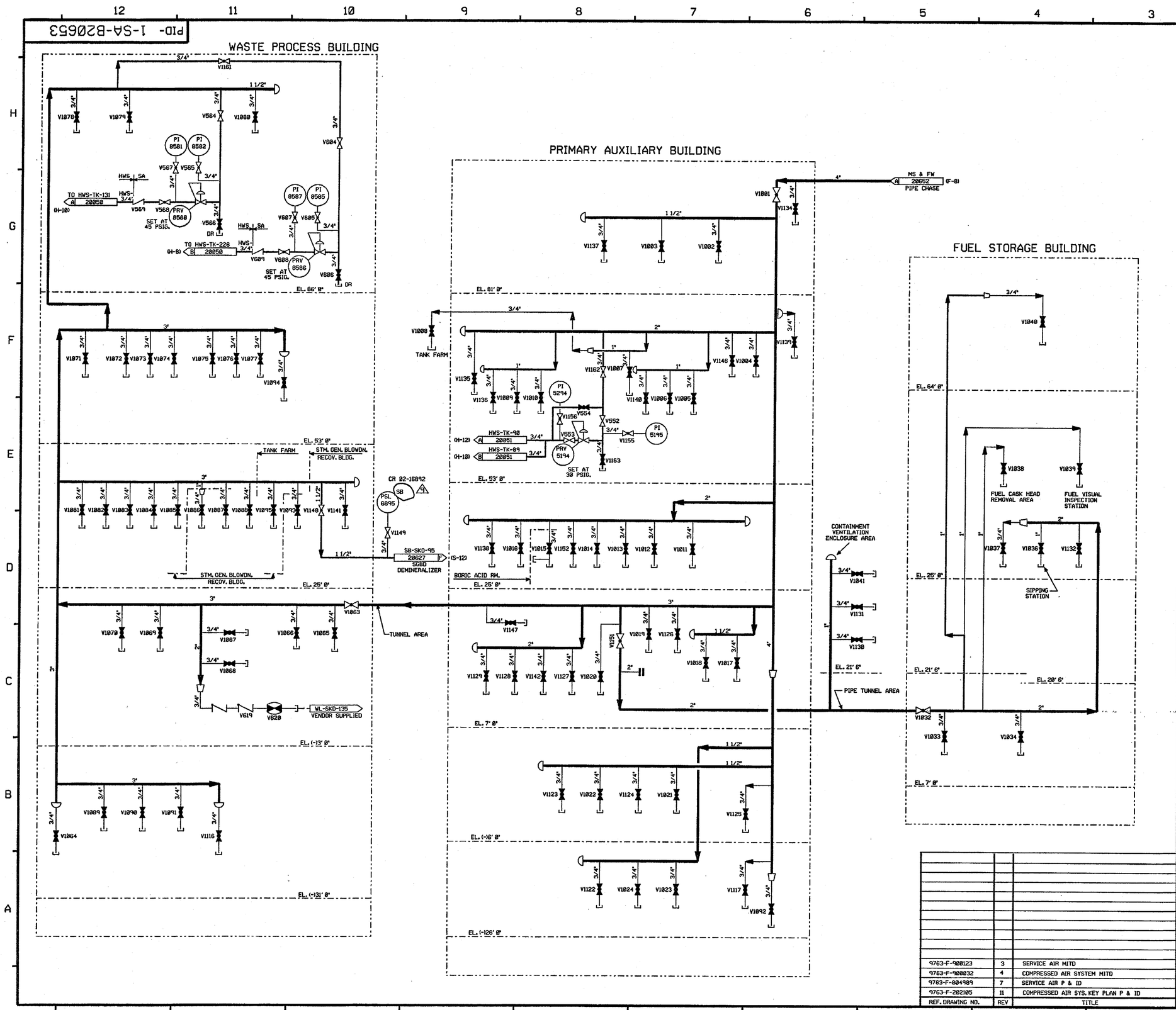

FOR P&ID REFERENCE DRAWINGS, SYMBOLS AND ABBREVIATIONS REFER TO DRAWINGS P&ID - LEGEND 1 AND P&ID - LEGEND 2

NOTES:

1. WORK THIS DRAWING WITH DRAWINGS 20649, 20650, 20651, & 20652.
2. ALL LINES, EQUIPMENT, COMPONENTS AND INSTRUMENTS HAVE SYSTEM PREFIX SA, UNLESS NOTED OTHERWISE.
3. ALL PIPING IS SAFETY CLASS NNS UNLESS NOTED OTHERWISE.
4. ALL PIPING RUNNING BETWEEN BUILDING OR TO OUTSIDE EQUIPMENT IS BELOW GROUND EXCEPT AS NOTED.
5. △ INDICATES REVISION LEVEL.
6. DELETED
7. PIPE CAPS OR QUICK DISCONNECTS MAY BE INSTALLED ON SERVICE AIR STATIONS AS DEEMED NECESSARY BY STATION STAFF.
8. VALVE SYMBOL MAY NOT BE REPRESENTATIVE OF INSTALLED COMPONENT TYPE, REFER TO VALVE LIST.

REV	DATE	DSGN	CHKD	SES	DESCRIPTION
9	2/13/03	MPW	BCS	JM	INCORP. CR 02-16892
8	1/31/96	BCS	MPW	RSG	INCORP. MMOD 95-570 CA-0
7	11/16/93	MRB	BCL	RSG	INCORP. DCR 90-60 CA0
6	6/17/93	MRB	BCL	VWS	INCORP. DCR 91-32 CA0
5	2/23/89	GPM	APL	GRM	INCORP. DCR 87-93CA-1
4	10/14/87	MPW	BCL	RRC	INCORP DCR 87/093
3	6/1/87	MPW	DWS	VWS	INCORP ECA 19/1185678
2	11/21/86	FJR	PAL	RRC	ADDED BLDG BOUNDARIES, DWG CONT FLGS, ELEV LEVEL & PIPE CAP PER UE&C ERECTION ISO. CORRECTED DRAFTING ERRORS PER UE&C P&ID. RELOCATED 3/4" LINE TO REFLECT ASBUILT CONDITION. DELETED NOTE 6.
1	6/18/86	JDM	DWS	RRC	CHG ITEMS 1 & 2 RESOLVED BY DR 82/322A, UPDATE REV DWG & REVISE ACCORDINGLY, DELETED CHANGE ITEM 3
0	03/21/86	TAK	JDM	WFD	ISSUED FOR OPERATIONS INCORP. ECA 19/808134A 19/1109830 74/80

REF. DRAWING NO.	REV	TITLE
9763-F-900123	3	SERVICE AIR MITD
9763-F-900032	4	COMPRESSED AIR SYSTEM MITD
9763-F-804989	7	SERVICE AIR P & ID
9763-F-202105	11	COMPRESSED AIR SYS. KEY PLAN P & ID

FPL ENERGY Seabrook Station

SERVICE AIR SYSTEM
MISC. BUILDINGS
DETAIL

PID- 1-SA-B20653

02/06/03

PID- 1-SS-B20516

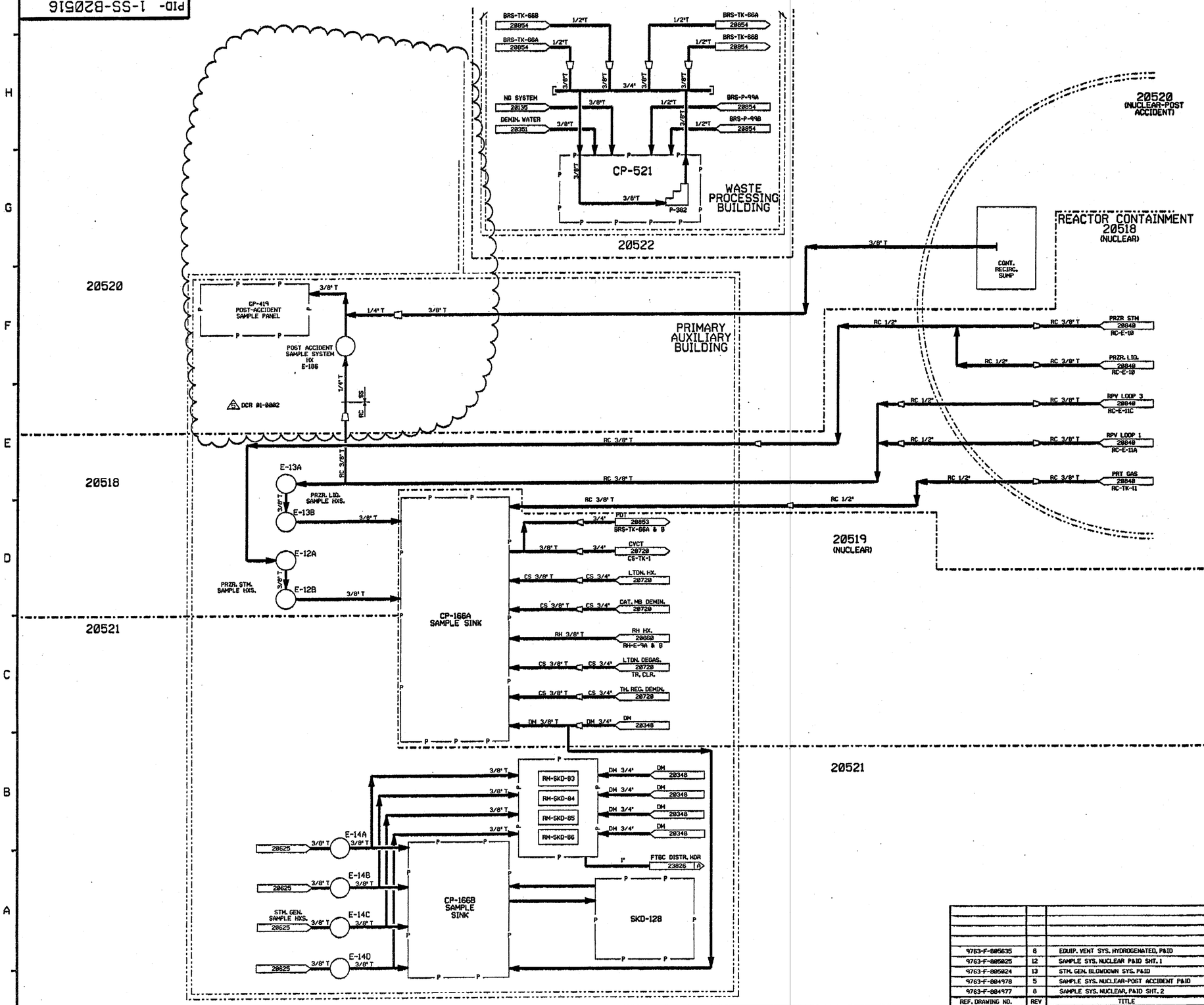

FOR P&ID REFERENCE DRAWINGS, SYMBOLS AND ABBREVIATIONS REFER TO DRAWINGS P&ID - LEGEND 1 AND P&ID - LEGEND 2

NOTES:

1. WORK THIS DRAWING WITH DRAWINGS 20518 THRU 20522.
2. ALL LINES, EQUIPMENT, COMPONENTS AND INSTRUMENTS HAVE SYSTEM PREFIX SS, UNLESS NOTED OTHERWISE.
3. △ INDICATES REVISION LEVEL

REV	DATE	DSGN	CHKD	CE	DESCRIPTION
5	1-10-02	MPV	JML	[illegible]	INCORP. DCR 01-0002 DCN 00
4	5/31/90	MRB	RHB	IW	INCORP. MMOD 89-588 CA 02
3	5/26/89	MRB	PAL	IW	INCORP. DCR 87-110 CA 11. REVISED NOTE 2. ADDED LEGEND REFERENCE NOTE
2	4/21/89	GPM	APL	GRM	REVISED NOTE 1. INCORP. DCR 88-81 CA #2
1	2/2/87	WDS	WRD	WWS	REVISED PER LATEST SYSTEM DRAWINGS. ADDED NOTE 3
0	12/21/85	DWS	DWS	WFD	ISSUED FOR OPERATIONS

REF. DRAWING NO.	REV	TITLE
9763-F-805635	8	EQUIP. VENT SYS. HYDROGENATED, P&ID
9763-F-805825	12	SAMPLE SYS. NUCLEAR P&ID SHT. 1
9763-F-805824	13	STM. GEN. BLOWDOWN SYS. P&ID
9763-F-804978	5	SAMPLE SYS. NUCLEAR-POST ACCIDENT P&ID
9763-F-804977	8	SAMPLE SYS. NUCLEAR, P&ID SHT. 2

North Atlantic Energy Service Corporation

SEABROOK STATION

SAMPLE SYSTEM OVERVIEW

PID- 1-SS-B20516

01/10/02

PID-1-SS-B20518

INSIDE CONT. | TUNNEL AREA | PAB

FOR P&ID REFERENCE DRAWINGS, SYMBOLS AND ABBREVIATIONS REFER TO DRAWINGS P&ID - LEGEND 1 AND P&ID - LEGEND 2

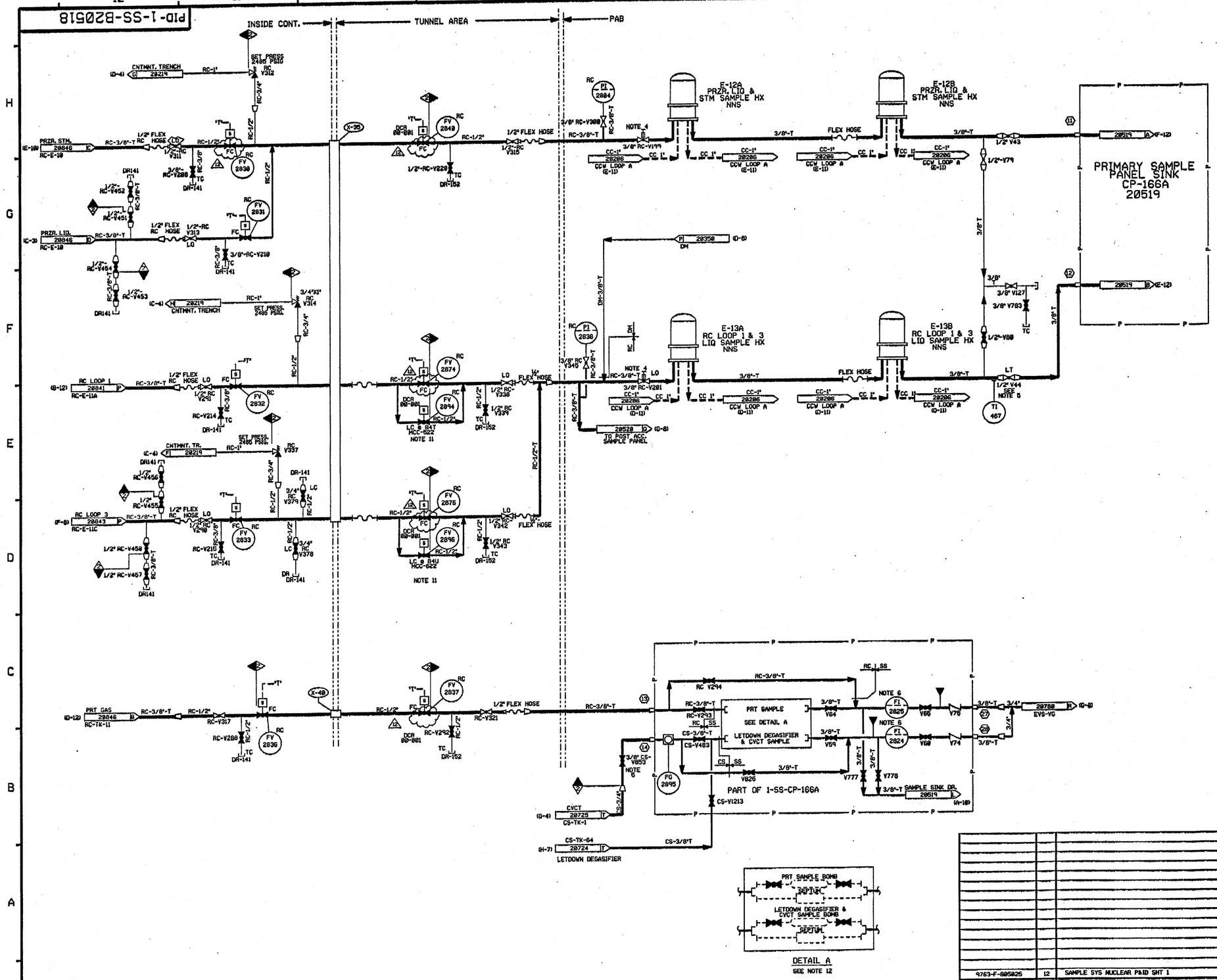

NOTES:

1. WORK THIS DRAWING WITH DRAWINGS 20516, 20519 THRU 20522.
2. ALL LINES, EQUIPMENT, COMPONENTS AND INSTRUMENTS HAVE SYSTEM PREFIX SS, UNLESS NOTED OTHERWISE.
3. ALL SAMPLE INSTRUMENTATION INDICATION SHALL BE LOCATED ON A PANEL AT THE SAMPLE SINK.
4. REACH ROD OPERATED FROM THE SAMPLE ROOM SIDE OF THE SAMPLE HX. ROOM-SAMPLE WALL.
5. THIS VALVE SHALL BE ADJUSTED AND SET TO GIVE A 0.8 GPM SAMPLE FLOW FROM RPV LOOP 1 OR 3.
6. ALL FLOW INDICATORS ON SS-CP-166A & B HAVE INTEGRAL NEEDLE VALVES WHICH ARE NOT SHOWN ON THE P&ID.
7. ⬡ TYPICAL CONNECTION IDENTIFICATION FOR SS-CP-166A & B
8. DELETED
9. △ INDICATES REVISION LEVEL.
10. VENTS, DRAINS AND TEST CONNECTION CODEBREAKS ARE AT THE DOWNSTREAM END OF THE OUTER ISOLATION VALVE PER 1-NHY-00511 UNLESS OTHERWISE NOTED.
11. VALVE DISABLED IN THE LOCKED CLOSED POSITION BY LOCKING BREAKERS B4T & B4U OPEN.
12. SAMPLE BOMBS AND SEPTUMS ARE INSTALLED DURING SAMPLING FUNCTIONS. EITHER THE SAMPLE BOMB OR THE SAMPLE SEPTUM MAY BE USED. SEE DETAIL A (A-6).

PORTIONS OF THIS DRAWING ARE

NUCLEAR SAFETY RELATED

REV	DATE	DSGN	DRWN	CHKD	CDE	SES	DESCRIPTION
12	4/12/02	BCS	—	MA	—	PAL	INCORP DCR 00-001 DCN#08
11	6/13/97	DWS	—	MPW	FAC	DHO	INCORP DCR 970008 DCN#08
10	12/9/94	DWS	—	BCL	MPW	MHO	INCORP MHOD 930546 CA#8
9	4/21/92	MRB	—	BCL	DWS	JEV	INCORP MHOD 91-015 CA8
8	5/23/90	MRB	FCB	JM	CCM	BCL	INCORP MHOD 90-555 CA84
7	10/22/90	MRB	FCB	JM	APL	WFD	RE-INCORP DCR 87-76 CA81
6	8/21/90	MRB	JM	APL	BCL	GLM	INCORPORATED MHOD 90-555 CA 80
5	12/28/89	MRB	FCB	PAL	APL	ES	INCORP. DCR'S 86-113 CA81, 87-268 CA6, 87-76 CA1. REVISED: NOTE 4.6. DELETED: NOTE 8. ADDED: REACH ROD SYMBOL TO VALVES V199 & V201 PER NOTE 4.
4	2/1/89	GPM	RHC	MRB	APL	DJM	INCORPORATED DRR 88-51 REV 1 REVISED: NOTES 1 & 2
3	3/22/88	GPM	RHC	BCL	APL	RRC	REVISED: EQUIP. TITLES INCORP: ECA 85/114987B, NOTE 10 ADDED: EQUIPMENT SAFETY CLASS DELETED: INCOMPLETE ITEM
2	10/9/86	JDH	DWS	MAP	BCL	RRC	ADDED: NOTE 10 & DELETED CODE BREAKS. REVISED: LOCATION OF PRZR. CONNECTION & STATION ADDED. PRZ. CONNECTION & LOCATION ADDED. REVISED VALVE END CONN'S, CORRECTED INCORP. ECA 19/1184738 LOCATION OF FLEX HOSE FROM UPSTR OF FV-2840 TO UPSTR OF FV-2876. ADDED NOTE 9 . PARTIAL INCORP OF ECA 86/114987B. ADDED V313 TAG NO. (OMITTED ON PREVIOUS REV.)
1	5/22/86	DWS	WES	MLH	—	GFS	GENERAL REV. INCORP. ECA 85/085114AB 85/112418A. REVISED NOTE 8
0	1/3/85	DWS	MRB	DJH	JMC	WFD	ISSUED FOR REVIEWS. ISSUED FOR OPERATIONS.

North Atlantic Energy Service Corporation

SEABROOK STATION

SAMPLE SYSTEM (NUCLEAR-NORMAL OPERATION) DETAIL

PID- 1-SS-B20518

REF. DRAWING NO.	REV	TITLE
4763-F-805825	12	SAMPLE SYS NUCLEAR P&ID SHT 1

08/22/02

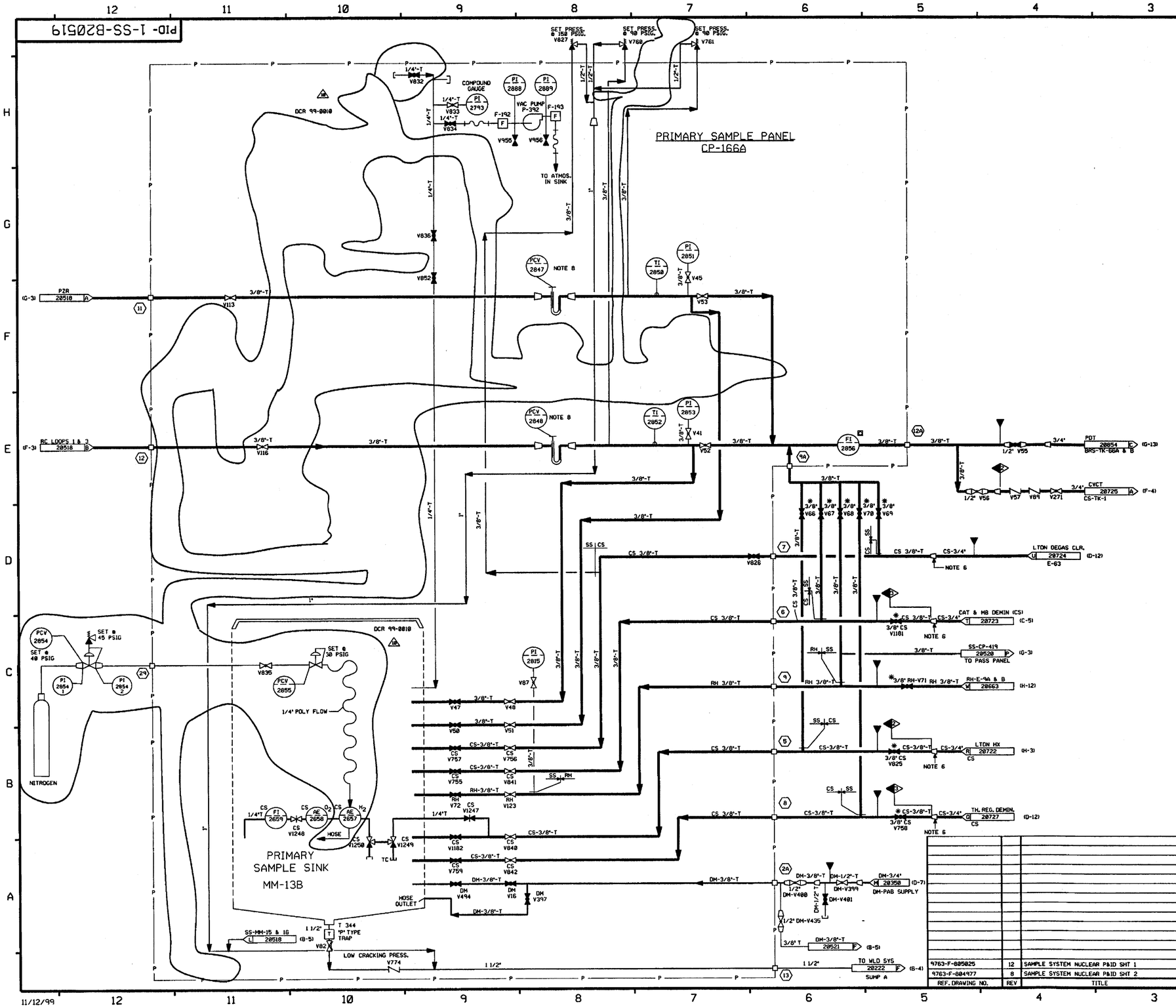

FOR P&ID REFERENCE DRAWINGS, SYMBOLS AND ABBREVIATIONS REFER TO DRAWINGS P&ID - LEGEND 1 AND P&ID - LEGEND 2

NOTES :

1. WORK THIS DRAWING WITH DRAWING 20518, 20518, 20520 THRU 20522.
2. ALL LINES, EQUIPMENT, COMPONENTS AND INSTRUMENTS HAVE SYSTEM PREFIX "SS", UNLESS OTHERWISE NOTED.
3. ALL TUBING 3/8" T AND MAT'L 2500 UNLESS OTHERWISE NOTED.
4. DELETED
5. DELETED
6. THESE REDUCERS ARE TO BE AS CLOSE AS POSSIBLE TO ROOT VALVE.
7. * THIS VALVE TO BE REACH ROD OPERATED FROM THE SAMPLE RM SIDE OF THE SAMPLE HX ROOM -SAMPLE WALL.
8. THIS EQUIPMENT HAS 1/4" TUBING CONNECTORS.
9. △ INDICATES REVISION LEVEL. DCR 99-0010
10. DELETED.
11. ⬡ CONTINUATION CONNECTION, SEE FP-74002.

PORTIONS OF THIS DRAWING ARE

NUCLEAR SAFETY RELATED

REV	DATE	DSGN	DRWN	CHKD	CDE	SES	DESCRIPTION
10	11-17-99	BCS	—	BCS	DWS	VWS	INCORP. DCR 99-0010 DCN-00.01
9	8/18/97	MPW	—	BCS	DWS	VWS	INCORP. MMOD 96-558 DCN 01
8	8/3/95	DWS	—	BCL	MPW	RRC	INCORP. MMOD 928550 CA#0
7	9/3/91	GPM	FCB	JM	MRB	RRC	INCORP. MMOD 90-597 CA01
6	5/23/91	MRB	RMC	JM	CCM	BCL	INCORPORATED MMOD 90-586 CA04
5	1/4/91	MRB	RMC	JM	DWS	BCL	INCORPORATED MMOD 90-639 CA01
4	2/23/90	MRB	JM	APL	MPW	IW	INCORPORATED DCR 87-76, CA01
3	2/1/89	GPM	RMC	MRB	APL	DJM	INCORPORATED DRR 88-51 REV 1 REVISED: DWG CONT NUMBER, NOTES 1 & 2. ADDED: P & ID LEGEND NOTE, NOTE 9 DWG CONT COORD'S & SYSTEM INTERFACE DELETED: NOTES 4 & 5, NMS-1 CL BOUNDARY, INCOMPLETE ITEM ECA 85/1149878 SUPERCEDED BY DRR 88-51.
2	9/17/86	BCL	TAK	MAP	VNK	RRC	RE-INCORP. PORTION OF ECA 85/1149878 (ECA REMAINS AS PARTIALLY INCORPORATED)
1	09/12/86	JDM	TAK	WRD	BCL	RRC	INCORP. ECA 85/1149878A AND PARTIAL INCORP. ECA 85/1149878. REV PER VENDOR FP-71148, ADDED NOTE 8.
0	12/31/85	DWS	MRB	JDM	JVC	WFD	ISSUED FOR OPERATIONS

REF. DRAWING NO.	REV	TITLE
9763-F-805025	12	SAMPLE SYSTEM NUCLEAR P&ID SHT 1
9763-F-804977	8	SAMPLE SYSTEM NUCLEAR P&ID SHT 2

North Atlantic Energy Service Corporation

SEABROOK STATION

SAMPLE SYSTEM
PRIMARY SAMPLE PANEL
CP-166A

PID- 1-SS-B20519

11/12/99

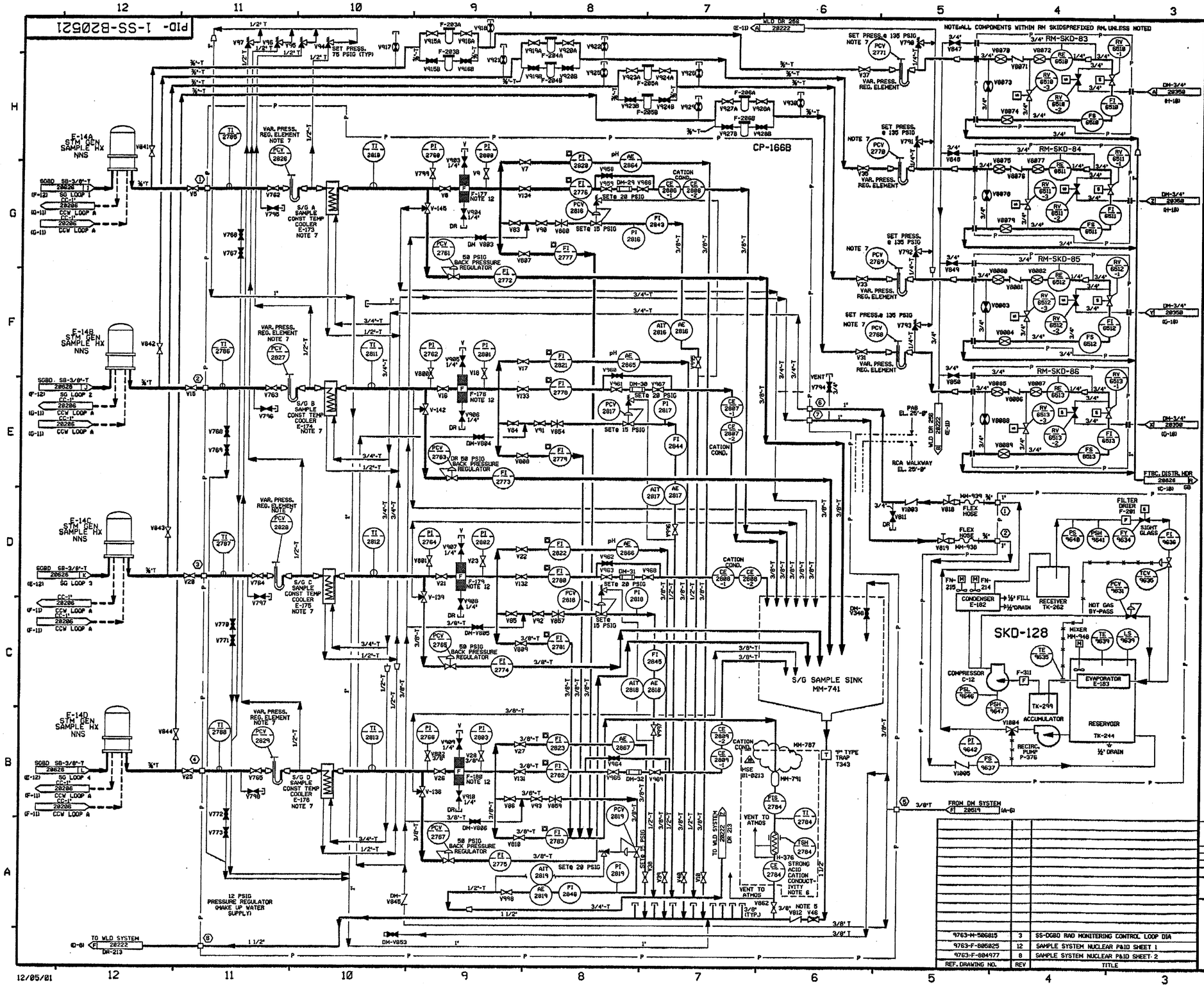

FOR P&ID REFERENCE DRAWINGS, SYMBOLS AND ABBREVIATIONS REFER TO DRAWINGS P&ID - LEGEND 1 AND P&ID - LEGEND 2

NOTES:

1. WORK THIS DRAWING WITH DRAWINGS 28516, 28518, 28519, 28628 & 28622.
2. ALL LINES, EQUIPMENT COMPONENTS AND INSTRUMENTS HAVE SYSTEM PREFIX SS, UNLESS NOTED OTHERWISE.
3. ALL TUBING 3/8"T AND MATL CLASS 2588 UNLESS NOTED OTHERWISE.
4. SEE DWG 28518 FOR ADDITIONAL NOTES.
5. LOW CRACKING PRESSURE VALVE.
6. ONLY ONE S/G AT A TIME IS LINED UP TO THE SACC ANALYZER
7. THIS EQUIPMENT HAS 1/4" TUBING CONNECTIONS.
8. DISPOSE OF COOLANT IN A PROPER CONTAINER FOR OFF SITE DISPOSAL. DO NOT DIRECT TO FLOOR DRAINS.
9. DRAINS ARE SLOPED TO OUTLET CONNECTION (*).
10. ALL LINES, EQUIPMENT, COMPONENTS AND INSTRUMENTS ARE SAFETY CLASS NNS UNLESS NOTED OTHERWISE.
11. △ INDICATES REVISION LEVEL.
12. FILTER ELEMENTS OF THE FOLLOWING FILTERS MAY BE OPTIONALLY INSTALLED PER THE DIRECTION OF CHEMISTRY: 1-SS-F-177, 178, 179, 180

REV	DATE	DSGN	CHKD	SES	DESCRIPTION
15	12/6/01	BCS	MRW	TEA	INCORP. MSE 01-8231 REV. 00
14	6/22/01	JM	BCS	SB	INCORP. DCR 00-0028, DCN-00, 05
13	11-2-95	BCL	MPW	RCP	INCORP. DCR 92-42 CA0.4, 5
12	6/25/93	MRB	BCL	JWB	INCORP. DCR 92-29 CA00

REF. DRAWING NO.	REV	TITLE
9763-H-506815	3	SS-DGBD RAD MONITERING CONTROL LOOP DIA
9763-F-805825	12	SAMPLE SYSTEM NUCLEAR P&ID SHEET 1
9763-F-804977	8	SAMPLE SYSTEM NUCLEAR P&ID SHEET 2

North Atlantic Energy Service Corporation

SEABROOK STATION

SAMPLE SYSTEM
STEAM GENERATOR
SAMPLE PANEL 166B P&ID

PID- 1-SS-B20521

12/05/01

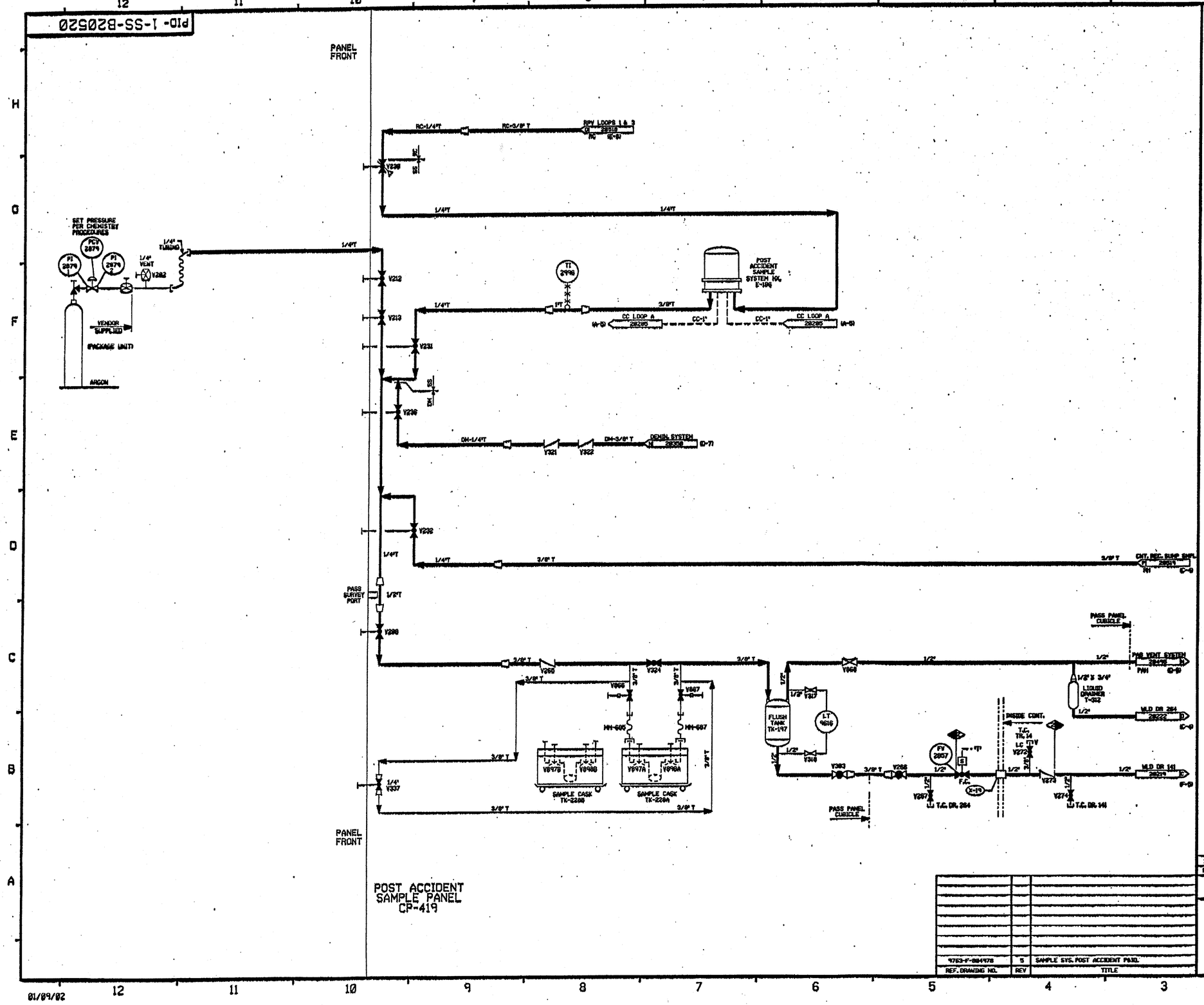

FOR P&ID REFERENCE DRAWINGS, SYMBOLS AND ABBREVIATIONS REFER TO DRAWINGS P&ID - LEGEND 1 AND P&ID - LEGEND 2

NOTES:

1. WORK THIS DRAWING WITH DRAWINGS 20516, 20518, 20519, 20521 AND 20522.
2. ALL PIPING, VALVES, EQUIPMENT, AND INSTRUMENTS HAVE SYSTEM PREFIX SS, UNLESS NOTED OTHERWISE.
3. VENT AND DRAIN CODE BREAKS ARE AT THE DOWNSTREAM END OF THE OUTER ISOLATION VALVE PER 1-NHY-005111, UNLESS NOTED OTHERWISE.
4. △ INDICATES REVISION LEVEL.
5. MAINTAIN LEVEL OF DEMIN. WATER IN REFERENCE LEG.
6. ALL LINES, EQUIPMENT, COMPONENTS AND INSTRUMENTS ARE SAFETY CLASS NNS, UNLESS NOTED OTHERWISE.
7. QUICK DISCONNECT COUPLINGS.

PORTIONS OF THIS DRAWING ARE

NUCLEAR SAFETY RELATED

REV	DATE	DSGN	CHKD	CE	DESCRIPTION
13	1-10-02	HPW	JM	ZZB	REVISED ENTIRE PID PER DCR 01-002 DCN 00

REF. DRAWING NO.	REV	TITLE
9763-F-004978	5	SAMPLE SYS. POST ACCIDENT P&ID.

North Atlantic Energy Service Corporation

SEABROOK STATION

SAMPLE SYSTEM (NUCLEAR-POST ACCIDENT) DETAIL

PID- 1-SS-B20520

01/09/02

PID- 1-WLD-B20216

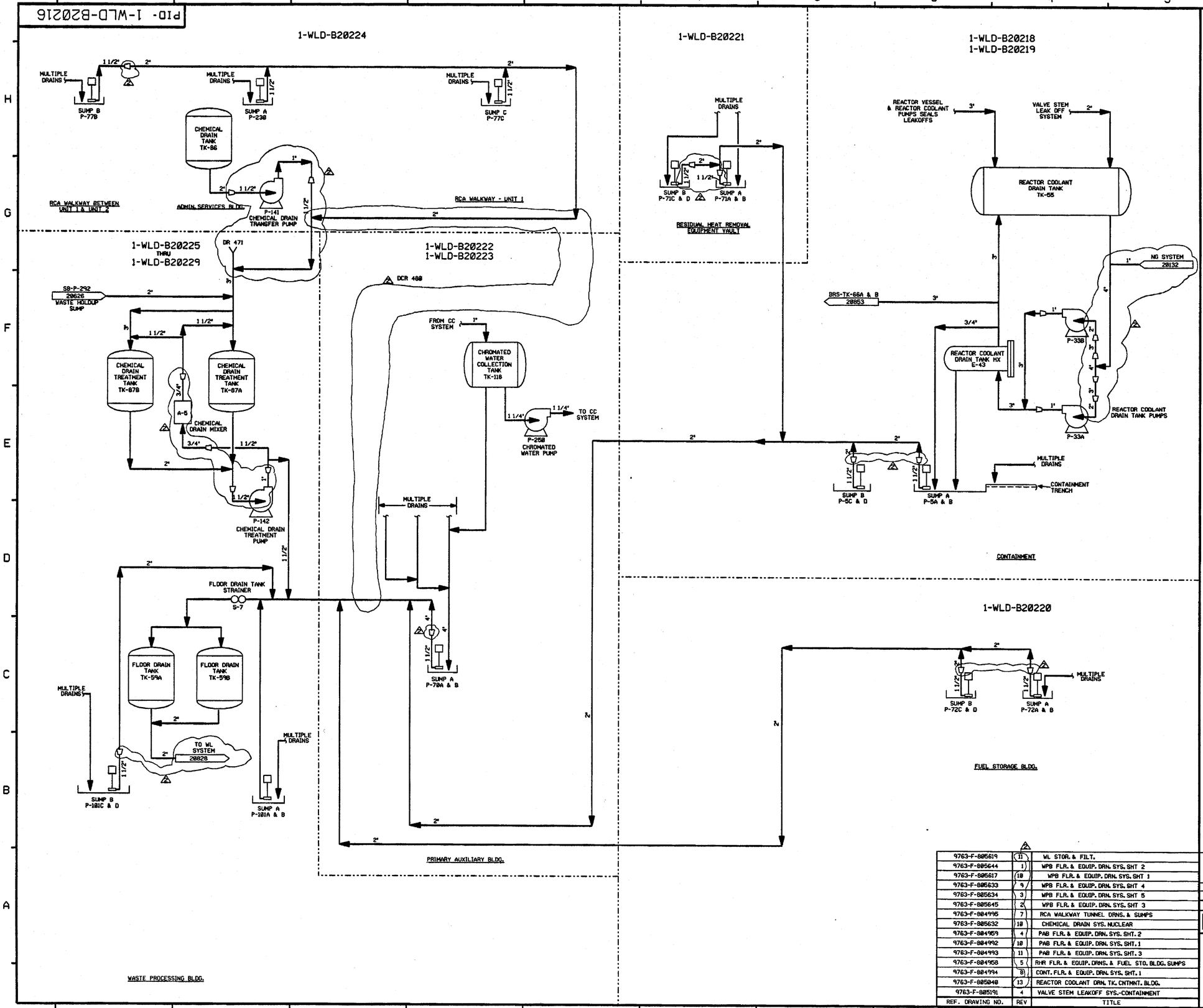

REF. DRAWING NO.	REV	TITLE
9763-F-805619	11	WL STOR. & FILT.
9763-F-805644	1	WPB FLR. & EQUIP. DRN. SYS. SHT 2
9763-F-805617	10	WPB FLR. & EQUIP. DRN. SYS. SHT 1
9763-F-805633	9	WPB FLR. & EQUIP. DRN. SYS. SHT 4
9763-F-805634	3	WPB FLR. & EQUIP. DRN. SYS. SHT 5
9763-F-805645	2	WPB FLR. & EQUIP. DRN. SYS. SHT 3
9763-F-804995	7	RCA WALKWAY TUNNEL DRNS. & SUMPS
9763-F-805632	10	CHEMICAL DRAIN SYS. NUCLEAR
9763-F-804959	4	PAB FLR. & EQUIP. DRN. SYS. SHT. 2
9763-F-804992	10	PAB FLR. & EQUIP. DRN. SYS. SHT. 1
9763-F-804993	11	PAB FLR. & EQUIP. DRN. SYS. SHT. 3
9763-F-804958	5	RHR FLR. & EQUIP. DRNS. & FUEL STO. BLDG. SUMPS
9763-F-804994	8	CONT. FLR. & EQUIP. DRN. SYS. SHT. 1
9763-F-805040	13	REACTOR COOLANT DRN. TK. CNTMNT. BLDG.
9763-F-805191	4	VALVE STEM LEAKOFF SYS.-CONTAINMENT

INCOMPLETE ITEMS

ITEM	NUMBER

NOTES:
1. WORK THIS DWG WITH DWGS 20218 THRU 20224.
2. ALL LINES, EQUIPMENT, COMPONENTS & INSTRUMENTS HAVE SYSTEM PREFIX WLD UNLESS NOTED OTHERWISE.
3. △ INDICATES DRAWING REVISION

REV	DATE	DSGN	DRWN	CHKD	CE	LDE	DESCRIPTION
2	2/3/87	WDS	DWS	JMW	BCL	RRC	INCORP DCR 488. REVISED REF. DWG REVISIONS. ADDED NOTE 3. REMOVED "B" FROM DWG NO'S IN NOTE 1. REVISED PER LATEST SYSTEM DWG'S. ADDED LINE SIZES.
1	4/2/86	GD	SKN	JNM	DJM	WFD	ISSUED FOR OPERATIONS
0	3/29/86	MLS	RI	JNM	JWK	WFD	ISSUED FOR FIELD VERIFICATION

PSNH PUBLIC SERVICE OF NEW HAMPSHIRE

SEABROOK STATION

WASTE PROCESSING LIQUID DRAINS OVERVIEW

PID- 1-WLD-B20216

07/28/84

PID- 1-WLD-B20218

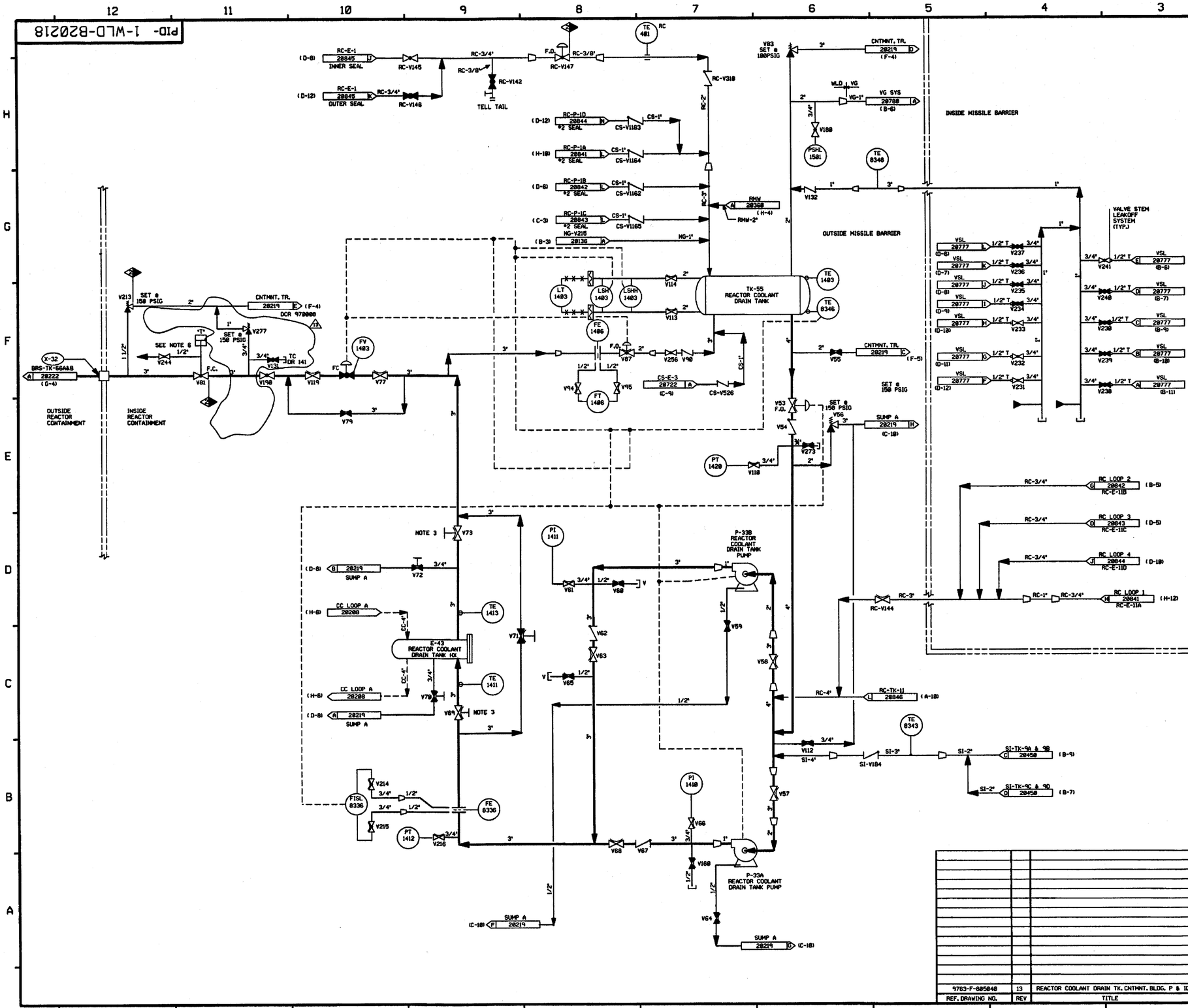

FOR P&ID REFERENCE DRAWINGS, SYMBOLS AND ABBREVIATIONS REFER TO DRAWINGS P&ID - LEGEND 1 AND P&ID - LEGEND 2

NOTES:

1. WORK THIS DRAWING WITH DRAWINGS 20216, & 20219 THRU 20224.
2. ALL LINES, EQUIPMENT, COMPONENTS, AND INSTRUMENTS HAVE SYSTEM PREFIX WLD UNLESS NOTED OTHERWISE.
3. VALVES V69 THRU V73 ARE REACH ROD OPERATED.
4. ALL LINES, EQUIPMENT, COMPONENTS, AND INSTRUMENTS ARE SAFETY CLASS NNS, UNLESS NOTED OTHERWISE.
5. △ INDICATES REVISION LEVEL
6. REFER TO DRAWING VSL-20774 FOR VALVE LEAKOFFS.

PORTIONS OF THIS DRAWING ARE

NUCLEAR SAFETY RELATED

REV	DATE	DSGN	DRWN	CHKD	CDE	SES	DESCRIPTION
13	6-13-97	DWS	—	TMB	FAC	DMQ	INCORP DCR 970888 DCN#00
12	1/31/97	DWS	—	BCS	MPW	AM	INCORP DCR 970005 CA#8
11	11/27/95	MPW	—	BCS	RRC	DMQ	INCORP DCR 95-23 CA-6
10	11/13/95	BCS	—	MPW	HNM	RJF	PARTIAL INCORP DCR 95-23 CA-5
9	6-3-94	MPW	—	DWS	MPW	JLD	INCORP DCR 91-13 CA8 & DCR 93-23 CA 3
8	4-3-92	DWS	—	BCL	DRB	ES	INCORP DCR'S 90-3 CA8
7	9-24-91	MRB	JM	RMC	GPM	JEV	INCORP. MHOD 91-818 CA8 REVISED NOTE 4 PER ENGINEERING DESIGN STANDARD 37100 SEC 3.8
6	4/28/88	MPW	RMC	BCL	DWS	RRC	REVISED: DRAIN LINES TO SUMP. CONTINUATION LETTER, REF. COORD AND DUPLICATED PIPING SHOWN IN PHANTOM.
5	7/2/87	GPM	JM	PAL	BCL	VWS	REVISED: PIPING TO REFLECT AS INSTALLED CONFIG. ADDED: NOTE 6
4	2/27/87	WDS	TAK	PAL	BCL	VWS	INCORP. WR 87-W00155
3	1/19/87	MAP	TAK	PAL	BCL	VWS	ADDED VSL CONT FLAGS & REF COORD'S & WR TO III. RELOCATED PIPING FROM V112 & V56 REMOVED CAP&LABEL FROM PI1410 & PI1411 AND RELOCATED TE-481 PER AS-BUILT CONDITION. PLUGGED CONN. SHOWN PER UEAC ISOMETRIC. ADDED REF COORD TO REF FLAGS. UPDATED REF DWG BLOCK & ADDED NOTE 5.
2	6/17/86	TAK	TAK	BCL	JMS	RRC	ADDED REF. RWG. 884994
1	4/2/86	GD	GJS	JDM	DPM	WFD	ISSUED FOR OPERATIONS
0	3/24/85	MLS	MRB	JNM	JWK	WFD	ISSUED FOR FIELD VERIFICATION

REF. DRAWING NO.	REV	TITLE
9763-F-885848	13	REACTOR COOLANT DRAIN TK. CNTMNT. BLDG. P & ID

North Atlantic Energy Service Corporation

SEABROOK STATION

WASTE PROCESSING LIQUID DRAINS
REACTOR COOLANT SYSTEM

PID- 1-WLD-B20218

06/06/97

PID- 1-WLD-B20219

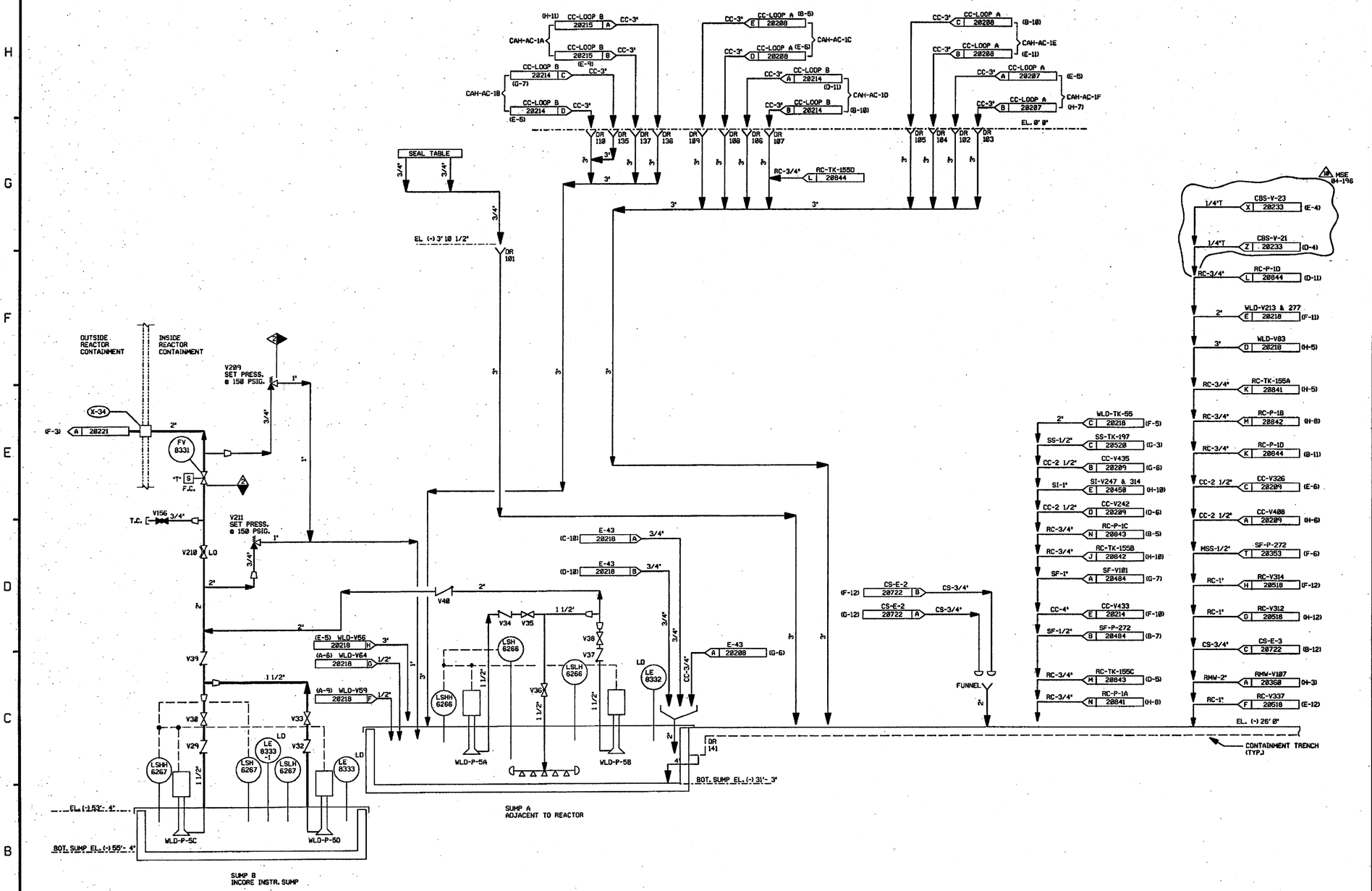

FOR P&ID REFERENCE DRAWINGS, SYMBOLS AND ABBREVIATIONS REFER TO DRAWINGS P&ID - LEGEND 1 AND P&ID - LEGEND 2.

DRAINS SHOWN ON THIS DRAWING

101	106	135
102	107	136
103	108	137
104	109	141
105	110	

NOTES:

1. WORK THIS DRAWING WITH DRAWINGS 20216,20218 & 20220 THRU 20229.
2. ALL LINES, EQUIPMENT, COMPONENTS, AND INSTRUMENTS HAVE SYSTEM PREFIX WLD UNLESS NOTED OTHERWISE
3. ALL LINES, EQUIPMENT, COMPONENTS, AND INSTRUMENTS ARE SAFETY CLASS NNS UNLESS NOTED OTHERWISE
4. △ INDICATES REVISION LEVEL.
5. DELETED

PORTIONS OF THIS DRAWING ARE

NUCLEAR SAFETY RELATED

REV	DATE	DSGN	CHKD	CE	DESCRIPTION
10	4-6-05	JM	MPW	PEB	INCORP MSE 04-196 REV 01 & 00
9	8/18/97	MPW	BCS	VWS	INCORP MMOD 96-550 DCN 01
8	6/13/97	DWS	MPW	DMQ	INCORP DCR 970008 DCN#00
7	1/17/97	DWS	MPW	DMQ	INCORP DCR 970002 CA#0 & 1
6	10/14/88	MRB	GPM	RRC	INCORP. NCR 86-68 REV 1 DELETED NOTE 5
5	4/20/88	MPW	BCL	RRC	ADDED LINE SIZES; REVISED DRAIN LINES TO SUMP A AND NOTE 3.
4	12/22/86	WDS	WRD	RRC	DELETED REF. DOC. REVISED DRAFTING ERRORS. DRAIN LOC. FOR HX-E-43. ADDED DRAIN FOR RC-P-1D. NOTE 5 & DESIGNATION AND NCR 86/68A AS INCORP. ITEM. INCORP NCR 86/111 REV.0 & NCR 86/112 REV.0
3	10/10/86	JDM	MPW	RRC	DELETED VO DRAIN LINE. ADDED CONT. REF. LOCATIONS AND NOTE 4. INCORP'D ECA 19/110341A, 19/118443A
2	6/16/86	TAK	DWS	RRC	REMOVED CHANGE ITEM #1 PER ECA 19/100566A. INCORP. ECA 19/116102A & 74/1025368 & C
1	4/2/86	GD	JDM		INCORP. ECA 19/100566A ISSUED FOR OPERATIONS
0	3/29/85	MLS	JNM	WFD	ISSUED FOR FIELD VERIFICATION

FPL ENERGY Seabrook Station

WASTE PROCESSING LIQUID DRAINS
CONTAINMENT BUILDING SUMPS

PID- 1-WLD-B20219

REF. DRAWING NO.	REV	TITLE
9763-F-804994	8	CNTMNT. FLR. & EQUIP. DR. SYS. SHT. 1 P & ID

03/31/05

NMY PID:20220.DGN

PID- 1-WLD-B20220

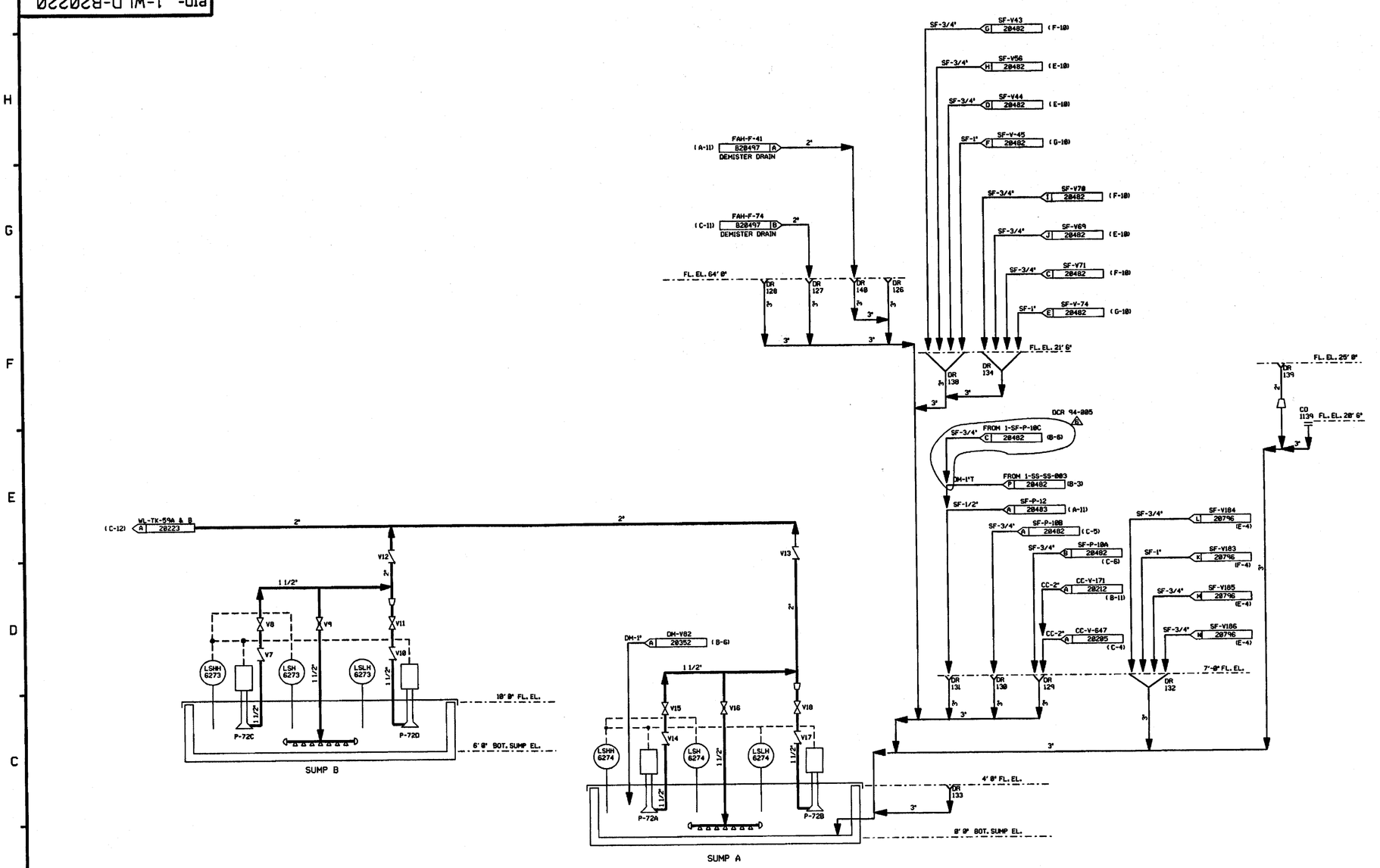

FOR P&ID REFERENCE DRAWINGS, SYMBOLS AND ABBREVIATIONS REFER TO DRAWINGS P&ID - LEGEND 1 AND P&ID - LEGEND 2

DRAINS ON THIS DRAWING

126	132
127	133
128	134
129	138
130	139
131	140

CLEANOUT ON THIS DRAWING

1139

NOTES:

1. WORK THIS DRAWING WITH DRAWINGS 28216, 28218, 28219, & 28221 THRU 28229.
2. ALL LINES, EQUIPMENT, COMPONENTS, AND INSTRUMENTS HAVE SYSTEM PREFIX WLD UNLESS NOTED OTHERWISE.
3. ALL LINES, EQUIPMENT, COMPONENTS, AND INSTRUMENTS ARE SAFETY CLASS NNS.
4. △ -INDICATES REVISION LEVEL.

REV	DATE	DSGN	DRWN	CHKD	CDE	SES	DESCRIPTION
6	3/21/97	BCS	—	MRB	DWS	RRC	INCORP. DCR 94-005 CA0
5	12/03/91	JM	—	MRB	MPW	RRC	INCORP. DCR 90-42 CA32
4	8/14/91	MRB	JM	FCB	GPM	BCL	INCORP. DCR 90-42 CA0
3	5/21/91	MRB	RMC	APL	BCL	GRM	INCORP. DCR 87-294 CA04
2	12/12/86	FJR	TAK	MRJ	BCL	RRC	ADDED CONTINUATION FLAG COORDS, REFERENCE DRAWINGS AND NOTE 4.
1	4/2/86	GD	GJS	JDM	DFM	WFD	ISSUED FOR OPERATIONS
0	3/24/86	MLS	MRB	JNM	JWK	WFD	ISSUED FOR FIELD VERIFICATION

North Atlantic Energy Service Corporation

SEABROOK STATION

WASTE PROCESSING LIQUID DRAINS
FUEL STORAGE BUILDING

PID- 1-WLD-B20220

REF. DRAWING NO.	REV	TITLE
9763-F-804958	4	RHR FLR & EQUIP DRNS & FUEL STO. BLDG SUMPS-P&ID

03/21/97

PID- 1-WLD-B20221

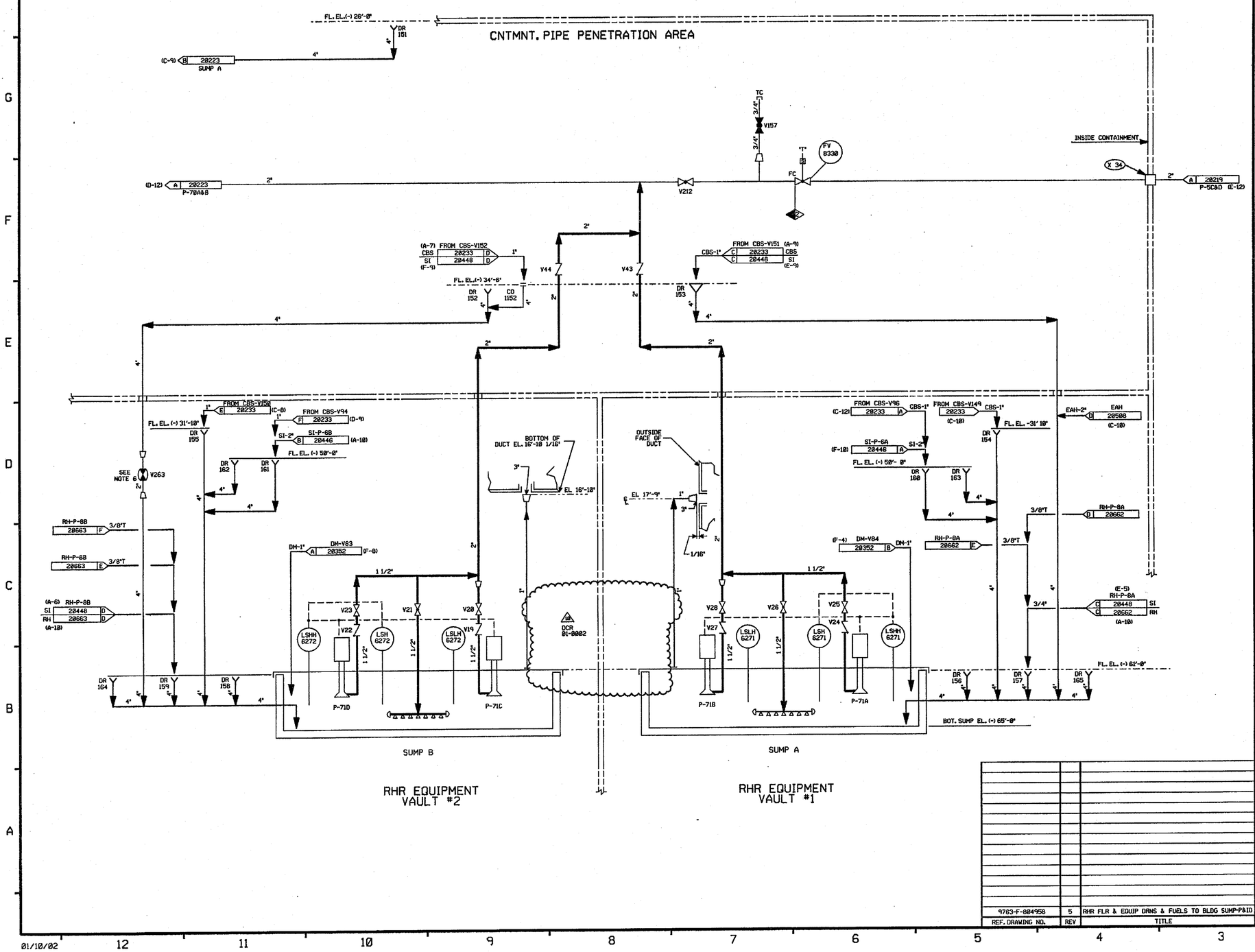

FOR P&ID REFERENCE DRAWINGS, SYMBOLS AND ABBREVIATIONS REFER TO DRAWINGS P&ID - LEGEND 1 AND P&ID - LEGEND 2

DRAINS ON THIS DRAWING

151	156	161
152	157	162
153	158	163
154	159	164
155	160	165

CLEANOUT ON THIS DRAWING

1152

NOTES:

1. WORK THIS DRAWING WITH DRAWINGS 20216, 20218 THRU 20220, & 20222 THRU 20224.
2. ALL LINES, EQUIPMENT, COMPONENTS, AND INSTRUMENTS HAVE SYSTEM PREFIX WLD UNLESS NOTED OTHERWISE
3. DELETED
4. ALL LINES, EQUIPMENT, COMPONENTS, AND INSTRUMENTS ARE SAFETY CLASS NNS UNLESS NOTED OTHERWISE
5. △ INDICATES REVISION LEVEL.
6. V263 IS A SPRING LOADED, SELF-CLOSING VALVE, PROVIDING MELB PROTECTION FROM CROSS-TRAIN FLOODING OF VAULTS.

PORTIONS OF THIS DRAWING ARE

NUCLEAR SAFETY RELATED

REV	DATE	DSGN	DRWN	CHKD	CDE	SES	DESCRIPTION
10	1-10-02	MPW	—	BCS	—	RRB	INCORP. DCR 01-0002 DCN 80
9	3/25/99	BCL	—	MRB	DWS	GPM	INCORP MMOD '92-552 CA0
8	10/29/98	MRB	FCB	JM	APL	BCL	INCORP MMOD '98-681 CA00
7	11/11/89	MRB	FCB	APL	WCL	GRM	COMPLETE INCORP DCR 87-311 CA16
6	9/6/89	MRB	RMC	APL	BCL	WFD	PARTIAL INCORP. OF DCR 87-311 CA 87
5	4/21/89	MPW	RMC	APL	MRB	GPM	ADDED: LINES FROM DWG #20520 SHOWN ON THIS DWG. PER CHEMISTRY REQUEST REVISED: CONT. REF. COORD., EAH CONT. & NOTE 4 DELETED: PIPE SPECS.
4	7/10/87	MPW	HIW	PAL	BCL	VWS	INCORP DCR 86-462.
3	11/4/86	MAP	OPO	WRD	BCL	RRC	REVISED REF DWG REV, ADDED P&ID LEGEND NOTE, DWG COORDS. REMOVED ALFA FROM DWG REF NOTE 1.
2	9/2/86	MAP	WES	JDM	BCL	RRC	DELETED NOTE 3 & INCORPED ECA 74/165678
1	4/2/86	GO	GJS	JDM	DLM	WFD	ISSUED FOR OPERATIONS
0	3/24/86	MLS	MRB	JNM	JVK	WFD	ISSUED FOR FIELD VERIFICATION

REF. DRAWING NO.	REV	TITLE
9763-F-804958	5	RHR FLR & EQUIP DRNS & FUELS TO BLDG SUMP-P&ID

North Atlantic Energy Service Corporation

SEABROOK STATION

WASTE PROCESSING LIQUID DRAINS
RHR
EQUIPMENT VAULTS #1 & #2

PID- 1-WLD-B20221

01/10/02

PID- 1-WLD-B20222

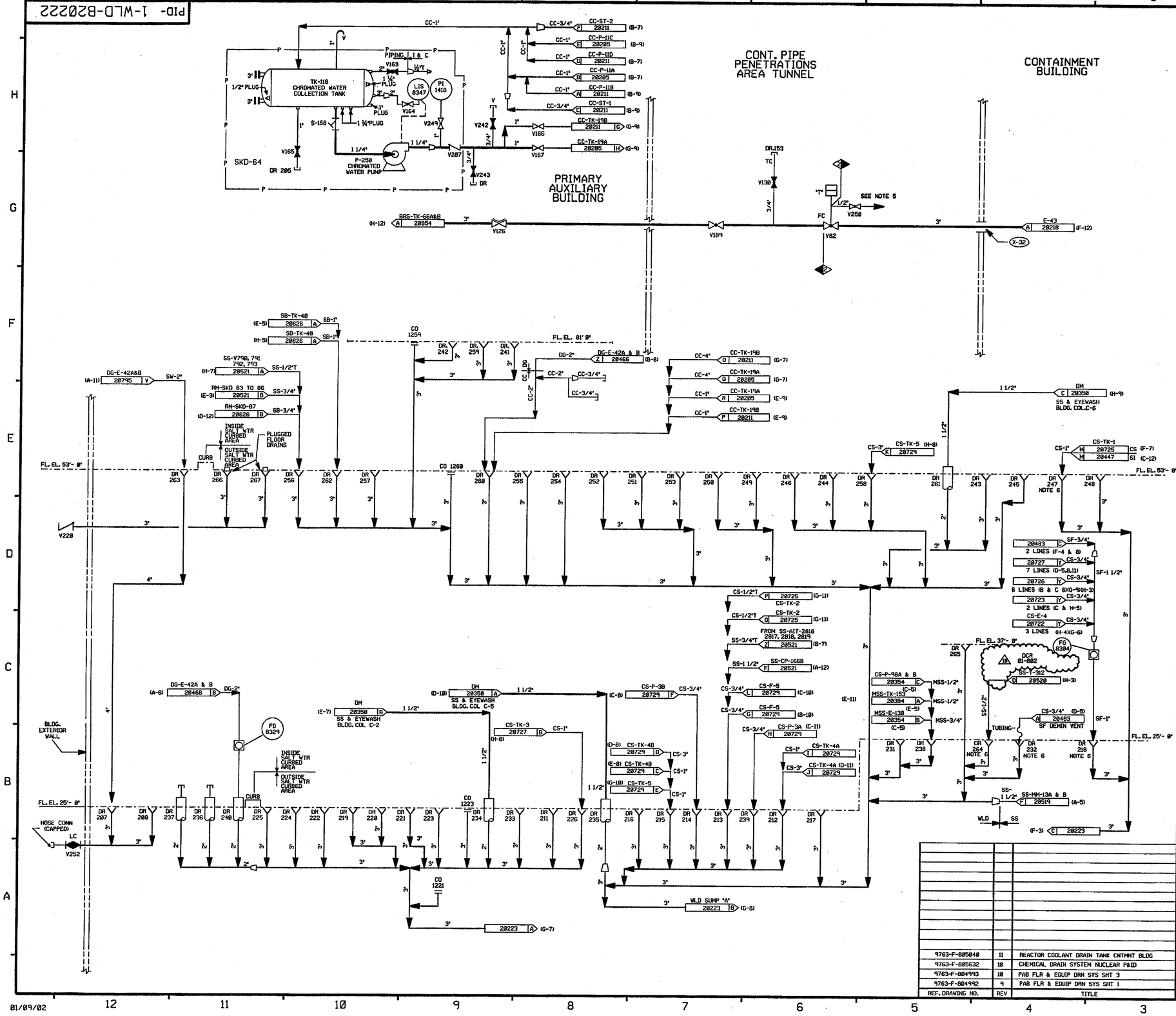

FOR P&ID REFERENCE DRAWINGS, SYMBOLS AND ABBREVIATIONS REFER TO DRAWINGS P&ID - LEGEND 1 AND P&ID - LEGEND 2

DRAINS ON THIS DRAWING

207	219	233	243	253	263
208	220	234	244	254	264
211	221	235	245	255	265
212	222	236	246	256	266
213	223	237	247	257	267
214	224	238	248	258	
215	225	239	249	259	
216	226	240	250	260	
217	231	241	251	261	
218	232	242	252	262	

CLEANOUTS ON THIS DRAWING

1221
1223
1259
1260

NOTES:

1. WORK THIS DRAWING WITH DRAWINGS 20216, 20218 THRU 20221, & 20223 THRU 20229.
2. ALL LINES, EQUIPMENT, COMPONENTS, AND INSTRUMENTATION HAVE SYSTEM PREFIX WLD UNLESS NOTED OTHERWISE.
3. ALL LINES, EQUIPMENT, COMPONENTS, AND INSTRUMENTATION ARE SAFETY CLASS NNS UNLESS NOTED OTHERWISE.
4. △ INDICATES REVISION LEVEL.
5. REFER TO DRAWING VSL-20774 FOR VALVE LEAKOFF.
6. THIS DRAIN HAS A GAS CONTAINMENT DEVICE ADDED PER MMOD 96-655.

PORTIONS OF THIS DRAWING ARE

NUCLEAR SAFETY RELATED

REV	DATE	DSGN	DRAWN	CHKD	CDE	SES	DESCRIPTION
18	11/09/01	MPW	—	PCS	—	RGB	INCORP DCR 01-062 & DCN 00
17	10/3/00	BCS	—	MPW	MRB	JCM	INCORP. MMOD 99-587 DCN 00
16	3/4/98	BCS	—	DWS	MPW	VWS	INCORP. MMOD 96-655 DCN-03
15	8/11/97	DWS	—	MPW	FAC	VWS	INCORP OF DCR 960016 CA#0
14	5/28/97	DWS	—	MPW	FAC	VWS	PARTIAL INCORP OF DCR 960016 CA#0
13	8/18/97	MPW	—	BCS	MRB	VWS	INCORP. MMOD 96-655 CA0
12	1/18/97	MPW	—	BCS	DWS	RRB	INCORP. DCR 87-55 CA0
11	11/2/95	BCL	—	MPW	RCP	MRB	INCORP. DCR 92-42 CA0
10	7/25/95	BCL	—	DWS	MPW	VWS	INCORP. MMOD 94-547 CA0
9	6/3/93	MRB	—	BCL	DWS	DMQ	INCORP. MMOD 91-516 CA0
8	4/12/93	BCL	—	MPW	MRB	WFZ	INCORP. MMOD 91-587 CA0
7	4/21/92	MRB	—	BCL	DWS	JEV	INCORP. MMOD 91-515 CA0
6	8/18/89	MRB	FCB	DWS	—	GRM	INCORP. MMOD 89-538 REV 0
5	4/21/88	GPM	RMC	APL	BCL	POS	INCORP: DCR 86-401CA1 REVISED: NOTE 3, PIPING PER AS INSTALLED CONFIGURATION. CONT DWG NO'S. & COORD'S. SALT WATER BOUNDARY. ADDED: CONT COORD'S & MATCH UP LETTERS, NOTE 5, TK-118 CONNECTIONS DELETED: BUILDING DESIGNATION.
4	12/3/86	MAP	OPO	MPW	BCL	RRC	REVISED PER UE&C ERECTION ISO. ADDED ISO. REF. DWGS., DWG. LOC. COORD'S & NOTE 4.
3	9/2/86	MAP	TAK	MAP	VNK	RRC	INCORP. ECA 99/115494A
2	6/16/86	JDM	GJS	DWS	JMS	RRC	ADD LETTER DESIG. TO CONTINUATIONS INCORP ECA 19/186629A
1	4/2/86	GD	GJS	JDM	DM	WFD	INCORP. ECA 88/114678B ISSUED FOR OPERATIONS
0	3/29/86	MNS	MRB	JNM	JWK	WFD	ISSUED FOR FIELD VERIFICATION

REF. DRAWING NO.	REV	TITLE
9763-F-805040	11	REACTOR COOLANT DRAIN TANK CNTMNT BLDG
9763-F-805632	10	CHEMICAL DRAIN SYSTEM NUCLEAR P&ID
9763-F-804993	10	PAB FLR & EQUIP DRN SYS SHT 3
9763-F-804992	9	PAB FLR & EQUIP DRN SYS SHT 1

North Atlantic Energy Service Corporation

SEABROOK STATION

WASTE PROCESSING LIQUID DRAINS
PRIMARY AUXILIARY BLDG.
SHT. 1 OF 2

PID- 1-WLD-B20222

01/09/02

CATEGORY 1

PID- 1-WLD-B20223

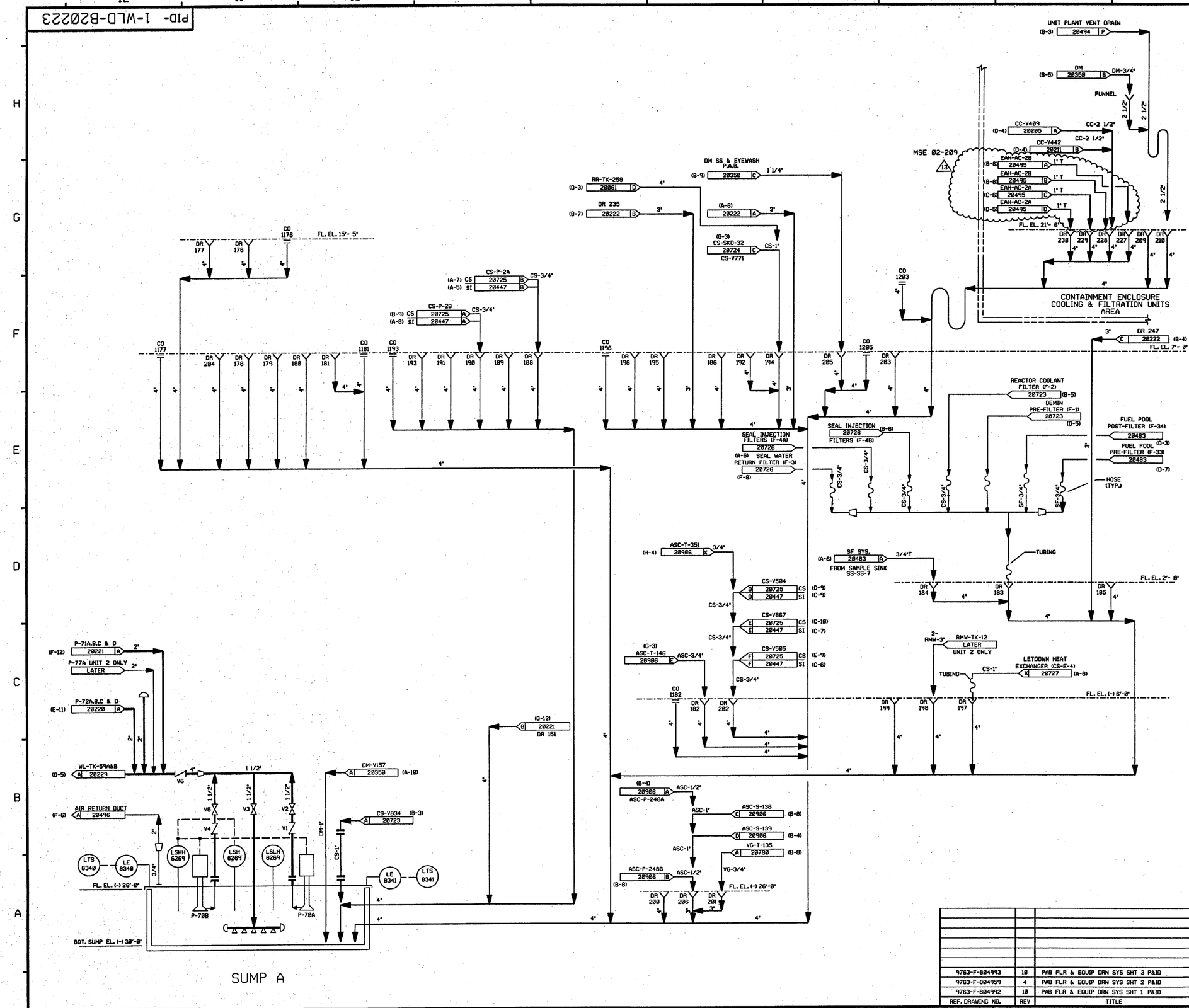

FOR P&ID REFERENCE DRAWINGS, SYMBOLS AND ABBREVIATIONS REFER TO DRAWINGS P&ID - LEGEND 1 AND P&ID - LEGEND 2

DRAINS ON THIS DRAWING

176	183	191	198	285	230
177	184	192	199	286	
178	185	193	200	289	
179	186	194	201	218	
180	188	195	202	227	
181	189	196	203	228	
182	190	197	204	229	

CLEANOUTS ON THIS DRAWING

1176	1193	1446 (UNIT #2)
1177	1196	
1181	1203	
1182	1205	

NOTES:

1. WORK THIS DRAWING WITH DRAWINGS 20216, 20218 THRU 20222, & 20224 THRU 20229.
2. ALL LINES, EQUIPMENT, COMPONENTS, & INSTRUMENTS HAVE SYSTEM PREFIX WLD UNLESS NOTED OTHERWISE.
3. ALL LINES, EQUIPMENT, COMPONENTS, & INSTRUMENTS ARE SAFETY CLASS NNS, UNLESS NOTED OTHERWISE.
4. △ INDICATES REVISION LEVEL.

REV	DATE	DSGN	CHKD	CE	DESCRIPTION
13	10-27-05	BCS	JM	RSG	INCORP. MSE 02-209 REV. 00
12	1/18/02	MPW	BCS	RRB	INCORP. DCR 01-0006 DCN 00
11	8/18/97	BCL	BCS	VWS	INCORP. MMOD-91-587 CA-0
10	11/2/92	BCL	DWS	DJM	INCORP. DCR 88-179 CA0
9	4/23/92	MRB	BCL	JEV	INCORP. MMOD 91-515 CA0
8	7/25/91	MRB	JM	JEV	INCORP. DCR 86-244 CA0
7	3-16-90	MRB	APL	RSG	INCORPORATED DCR 87-33 CA7 REVISED: NOTE 3 ADDED: CONTINUATION TAG DESCRIPTIONS
6	3/22/88	MPW	BCL	RRC	LINE FROM DWG 20520 SHOWN GOING TO SUMP PER CHEMISTRY REQUEST.
5	2/3/87	JDM	MPW	RRC	INCORP DCR 480
4	12/11/86	WDS	MRJ	RRC	REVISED REF. DWG. REVISIONS, ADDED FLANGES AT SUMP A
3	10/10/86	MAP	JDM	RRC	ADDED DWG. LOCATION COORD. & NOTE 4. RE-INCORPORATED ECA 99/114510A INC. ECA'S 99/806183C,19/100049A
2	6/13/86	TAK	DWS	RRC	INC ECA'S 99/114510A & 99/806183A
1	4/2/86	GD	JDM	WFD	ISSUED FOR OPERATIONS
0	3/29/85	MLS	RSL	WFD	ISSUED FOR FIELD VERIFICATION

REF. DRAWING NO.	REV	TITLE
9763-F-804993	10	PAB FLR & EQUIP DRN SYS SHT 3 P&ID
9763-F-804959	4	PAB FLR & EQUIP DRN SYS SHT 2 P&ID
9763-F-804992	10	PAB FLR & EQUIP DRN SYS SHT 1 P&ID

FPL ENERGY Seabrook Station

WASTE LIQUID DRAINS
PRIMARY AUXILIARY BLDG.
SHT. 2 OF 2

PID- 1-WLD-B20223

10/26/05

PID- 1-WLD-B20224

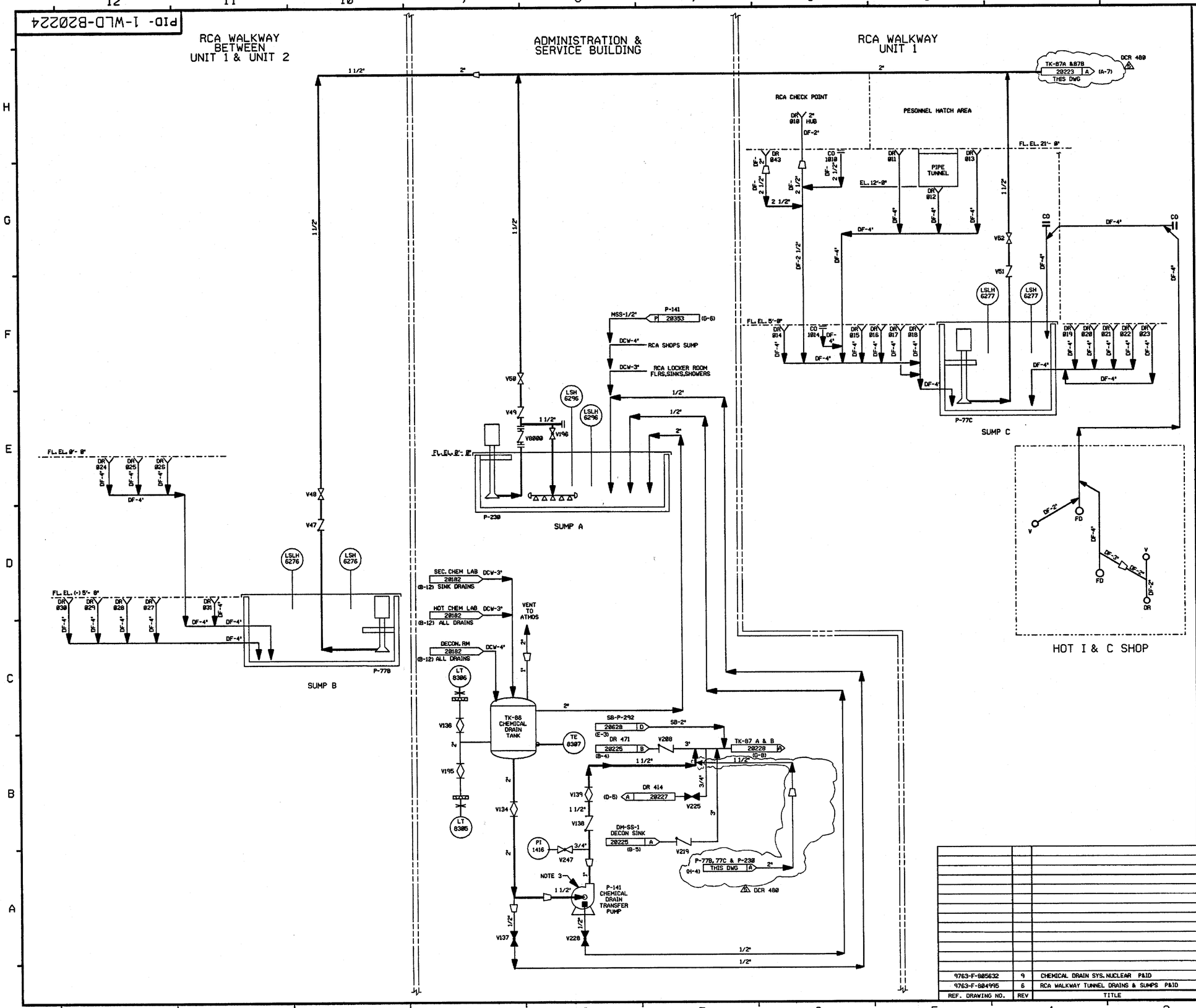

FOR P&ID REFERENCE DRAWINGS, SYMBOLS AND ABBREVIATIONS, REFER TO DRAWINGS P&ID - LEGEND 1 AND P&ID - LEGEND 2.

INCOMPLETE ITEMS	
ITEM	NUMBER

DRAINS ON THIS DRAWING

010	016	022	028
011	017	023	029
012	018	024	030
013	019	025	031
014	020	026	043
015	021	027	

CLEANOUTS ON THIS DRAWING

1010
1014

NOTES:

1. WORK THIS DRAWING WITH DRAWINGS 20216,20218 THRU 20223 & 20225 THRU 20229.
2. ALL LINES, EQUIPMENT, COMPONENTS, AND INSTRUMENTS HAVE SYSTEM PREFIX WLD UNLESS NOTED OTHERWISE.
3. ALL LINES, EQUIPMENT, COMPONENTS, AND INSTRUMENTS ARE SAFETY CLASS N.
4. △ INDICATES REVISION LEVEL.

REV	DATE	DSGN	DRWN	CHKD	CE	LDE	DESCRIPTION
5	2/3/87	JDM	DPS	[illegible]	BCL	[illegible]	INCORP. DCR 480.
4	11/12/86	CSB	OPO	WRD	BCL	RRC	REMOVED SIGNAL LINE FROM LEVEL INSTR. (FOUND ON I&C LOOP DWG.) REMOVED PIPE SPEC. ADDED V8000 PER INSTALLED CONDITION.
3	10/9/86	JDM	OPO	MPW	VNK	RRC	ADDED CONT. REF. LOCA. & NOTE 4 INCORP. ECA 19/1151698 & 19/1181780
2	8/12/86	DWS	WES	DWS	JHS	RRC	ADDED DCW CONTINUATIONS
1	4/2/86	GD	GJS	JDM	DPM	WFD	INCORP. ECA 86/114869C ISSUED FOR OPERATIONS
0	3/29/86	MLS	MRB	RSL	JWK	WFD	ISSUED FOR FIELD VERIFICATION

REF. DRAWING NO.	REV	TITLE
9763-F-805632	9	CHEMICAL DRAIN SYS. NUCLEAR P&ID
9763-F-804995	6	RCA WALKWAY TUNNEL DRAINS & SUMPS P&ID

PSNH PUBLIC SERVICE OF NEW HAMPSHIRE

SEABROOK STATION

WASTE PROCESSING LIQUID DRAINS ADMINISTRATION BUILDING & RCA WALKWAY DETAILS

PID- 1-WLD-B20224

06/08/84

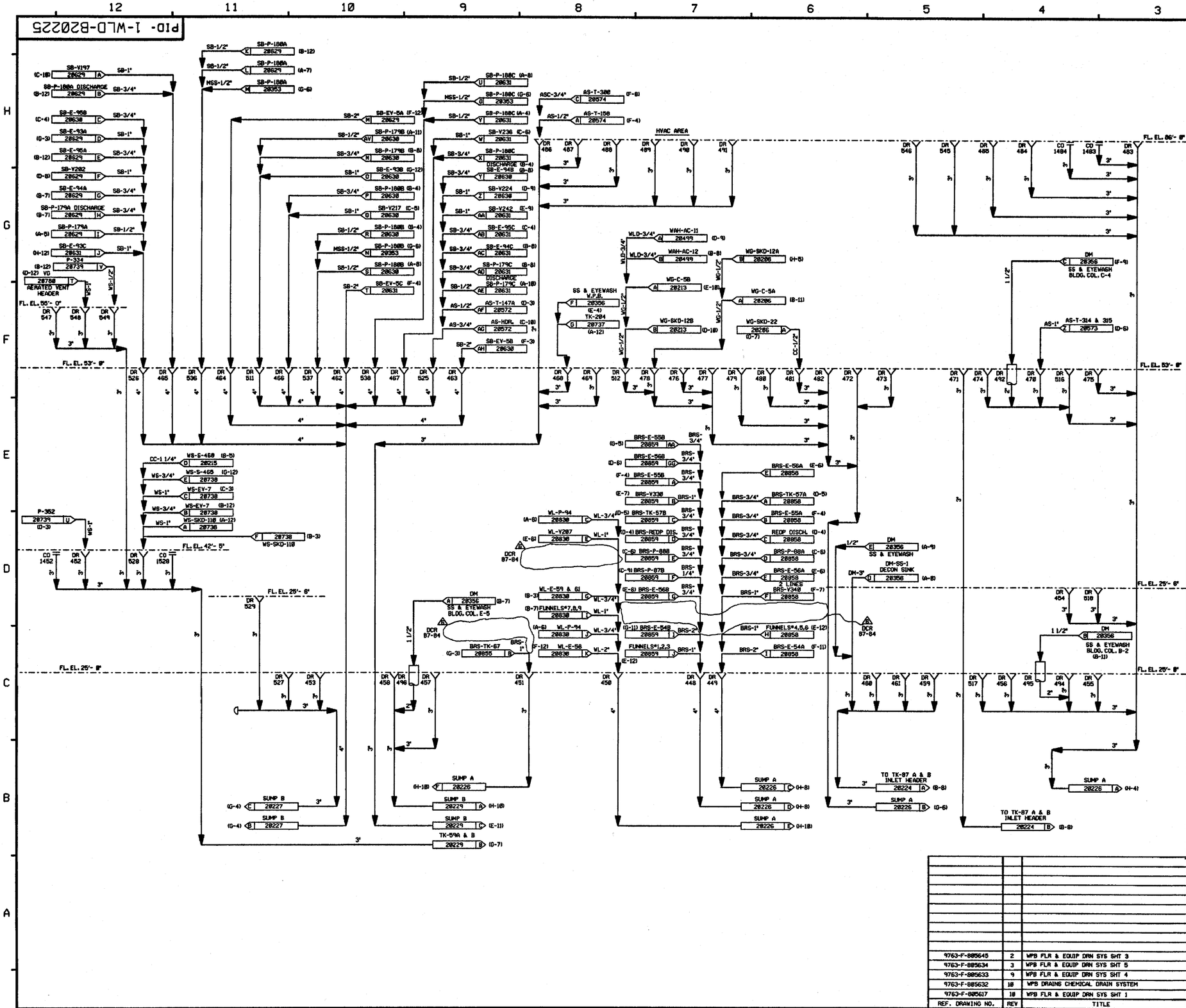

FOR P&ID REFERENCE DRAWINGS, SYMBOLS AND ABBREVIATIONS REFER TO DRAWINGS P&ID - LEGEND 1 AND P&ID - LEGEND 2

DRAINS ON THIS DRAWING

448	458	468	478	489	517	545
449	459	469	479	490	518	546
450	460	470	480	491	525	547
451	461	471	481	492	526	548
452	462	472	482	493	527	549
453	463	473	483	494	528	
454	464	474	484	495	529	
455	465	475	485	496	536	
456	466	476	486	511	537	
457	467	477	487	512	538	
			488	516		

CLEANOUTS ON THIS DRAWING

1452
1483
1484
1520

NOTES:

1. WORK THIS DRAWING WITH DRAWINGS 20216, 20218 THRU 20224, & 20226 THRU 20229.
2. ALL LINES, EQUIPMENT, COMPONENTS, AND INSTRUMENTATION HAVE SYSTEM PREFIX WLD UNLESS NOTED OTHERWISE.
3. ALL LINES, EQUIPMENT, COMPONENTS, AND INSTRUMENTATION ARE SAFETY CLASS NNS. UNLESS NOTED OTHERWISE.
4. △ INDICATES REVISION LEVEL.

REV	DATE	DSGN	DRWN	CHKD	CE	LDE	DESCRIPTION
6	11/9/92	MRB	FCB	RMC	DJM	DJM	INCORP. DCR 87-84 CA0
5	3/16/90	MRB	RMC	APL	WCL	RSG	INCORPORATED DCR 87-33 CA07 REVISED: DECON SINK CONT. TO CLARIFY DUPLICATION OF SYSTEM INTERFACE, CONT. TAGS & COORD. PER SYSTEM. ADDED: CONT DESCRIPTIONS
4	11/7/88	MRB	RMC	GPM	APL	RRC	INCORP. ECA 19/802229A REVISED: NOTE 3 ADDED: CONTINUATION COORD'S DELETED: REDUNDANT CONTINUATION TAGS
3	12/17/86	MAP	OPO	MRJ	BCL	RRC	REVISED PIPING TIE-IN CONNECTION PER UE&C PIPING DIAG. ADDED DWG. LOC. COORDS & REVISED REVISION NOS. ADDED NOTE 4.
2	6/12/86	TAK	TAK	DWS	JMS	RRC	INCORP. DR 94/327B, AND ADDED REF. DWGS.
1	4/2/86	GD	GJS	JDM	DJM	WFD	INCORP. ECA 99/114053A INCORP. ECA 19/113059A ISSUED FOR OPERATIONS
0	3/29/86	MLS	MRB	JMN	JWK	WFD	ISSUED FOR FIELD VERIFICATION

REF. DRAWING NO.	REV	TITLE
9763-F-805645	2	WPB FLR & EQUIP DRN SYS SHT 3
9763-F-805634	3	WPB FLR & EQUIP DRN SYS SHT 5
9763-F-805633	9	WPB FLR & EQUIP DRN SYS SHT 4
9763-F-805632	10	WPB DRAINS CHEMICAL DRAIN SYSTEM
9763-F-805617	10	WPB FLR & EQUIP DRN SYS SHT 1

PSNH PUBLIC SERVICE OF NEW HAMPSHIRE

SEABROOK STATION

WASTE PROCESSING LIQUID DRAINS WASTE PROCESSING BUILDING DRAINS SHT 1 OF 3

PID- 1-WLD-B20225

04/17/91

PID- 1-WLD-B20226

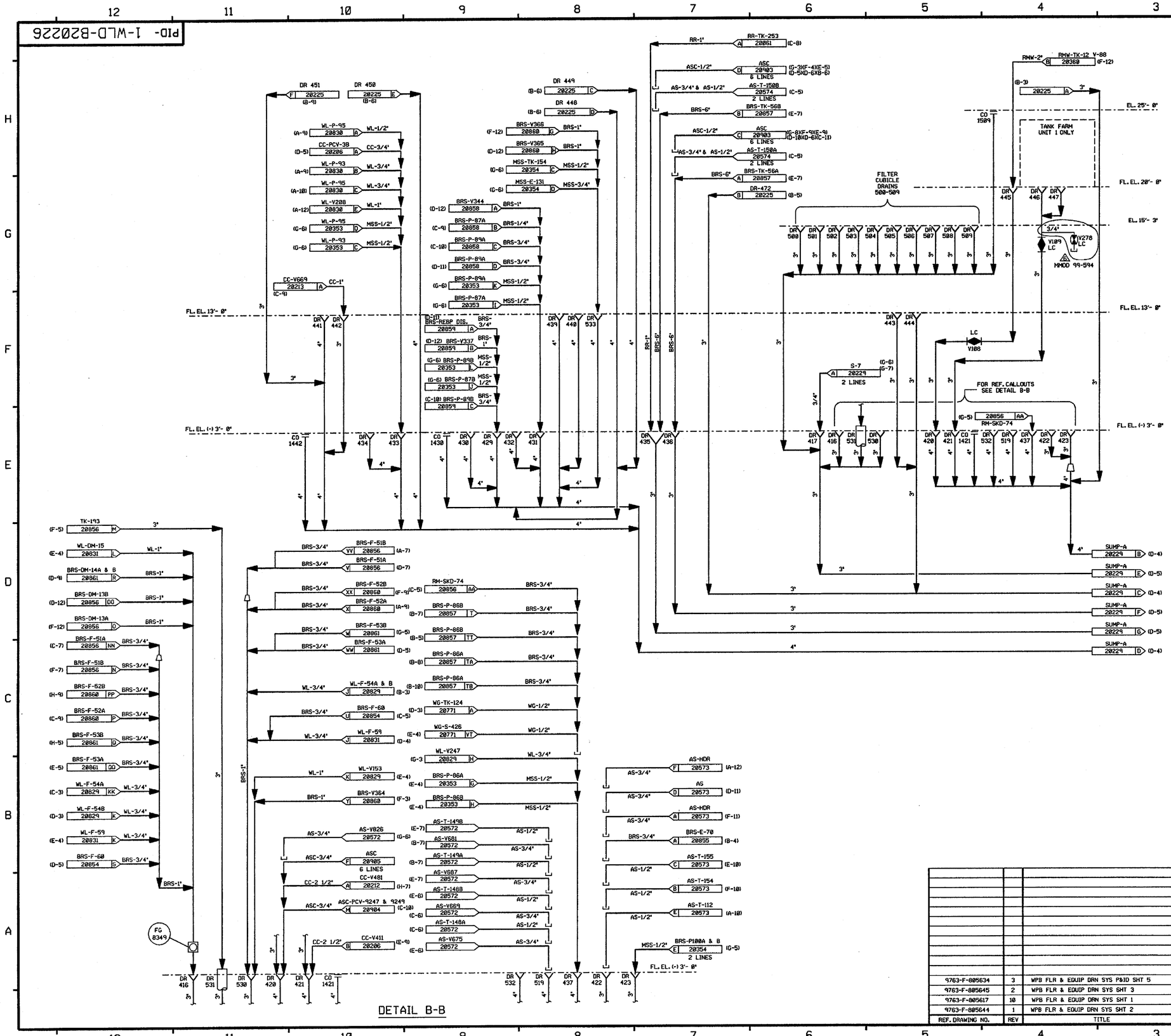

FOR P&ID REFERENCE DRAWINGS, SYMBOLS AND ABBREVIATIONS REFER TO DRAWINGS P&ID - LEGEND 1 AND P&ID - LEGEND 2

DRAINS ON THIS DRAWING

416	431	440	500	508
417	432	441	501	509
420	433	442	502	519
421	434	443	503	530
422	435	444	504	531
423	436	445	505	533
429	437	446	506	532
430	439	447	507	

CLEANOUTS ON THIS DRAWING

1421
1430
1442
1509

NOTES:

1. WORK THIS DRAWING WITH DRAWINGS 20216, 20218 THRU 20225, 20227 THRU 20229.
2. ALL LINES, EQUIPMENT, COMPONENTS, AND INSTRUMENTATION HAVE SYSTEM PREFIX WLD, UNLESS NOTED OTHERWISE.
3. ALL LINES, EQUIPMENT, COMPONENTS, AND INSTRUMENTS ARE SAFETY CLASS NNS, UNLESS NOTED OTHERWISE.
4. △ INDICATES REVISION LEVEL.

REV	DATE	DSGN	DRAWN	CHKD	CDE	SES	DESCRIPTION
6	7/11/00	BCS	—	MPW	DLD	DEA	INCORP MMOD 99-594 DCN-00
5	11/7/92	MRB	—	BCL	DWS	DJM	INCORP DCR 87-84 CA0
4	9/27/91	MRB	RMC	JM	GPM	WFD	INCORP DCR 90-97 CA0 REVISED NOTE 3 PER ENG DESIGN STANDARD 31700 SECT. 3.0
3	12/9/86	MPW	OPD	WRD	BCL	RRC	ADDED CONT. REF. LOCS., CAPS TO DRAINS PER ERECTION ISO., NOTE 4, DELETED WL LINE, DUPLICATED SHOWN ON DWG. 20829
2	6/24/86	GD	GJS	VFS	JMS	RRC	SIZES OF DRAINS 437, 519, & 532 CHANGED & GENERAL REVISION PER P&ID REVIEW.
1	3/24/85	GD	GJS	JDM			ISSUED FOR OPERATIONS
0	3/24/85	MLS	MRB	JNM	JWK	WFD	ISSUED FOR FIELD VERIFICATION

REF. DRAWING NO.	REV	TITLE
9763-F-805634	3	WPB FLR & EQUIP DRN SYS P&ID SHT 5
9763-F-805645	2	WPB FLR & EQUIP DRN SYS SHT 3
9763-F-805617	10	WPB FLR & EQUIP DRN SYS SHT 1
9763-F-805644	1	WPB FLR & EQUIP DRN SYS SHT 2

North Atlantic Energy Service Corporation

SEABROOK STATION

WASTE PROCESSING LIQUID DRAINS
WASTE PROCESSING BUILDING
DRAINS
SHT. 2 OF 3

PID- 1-WLD-B20226

07/10/00

PID- 1-WLD-B20227

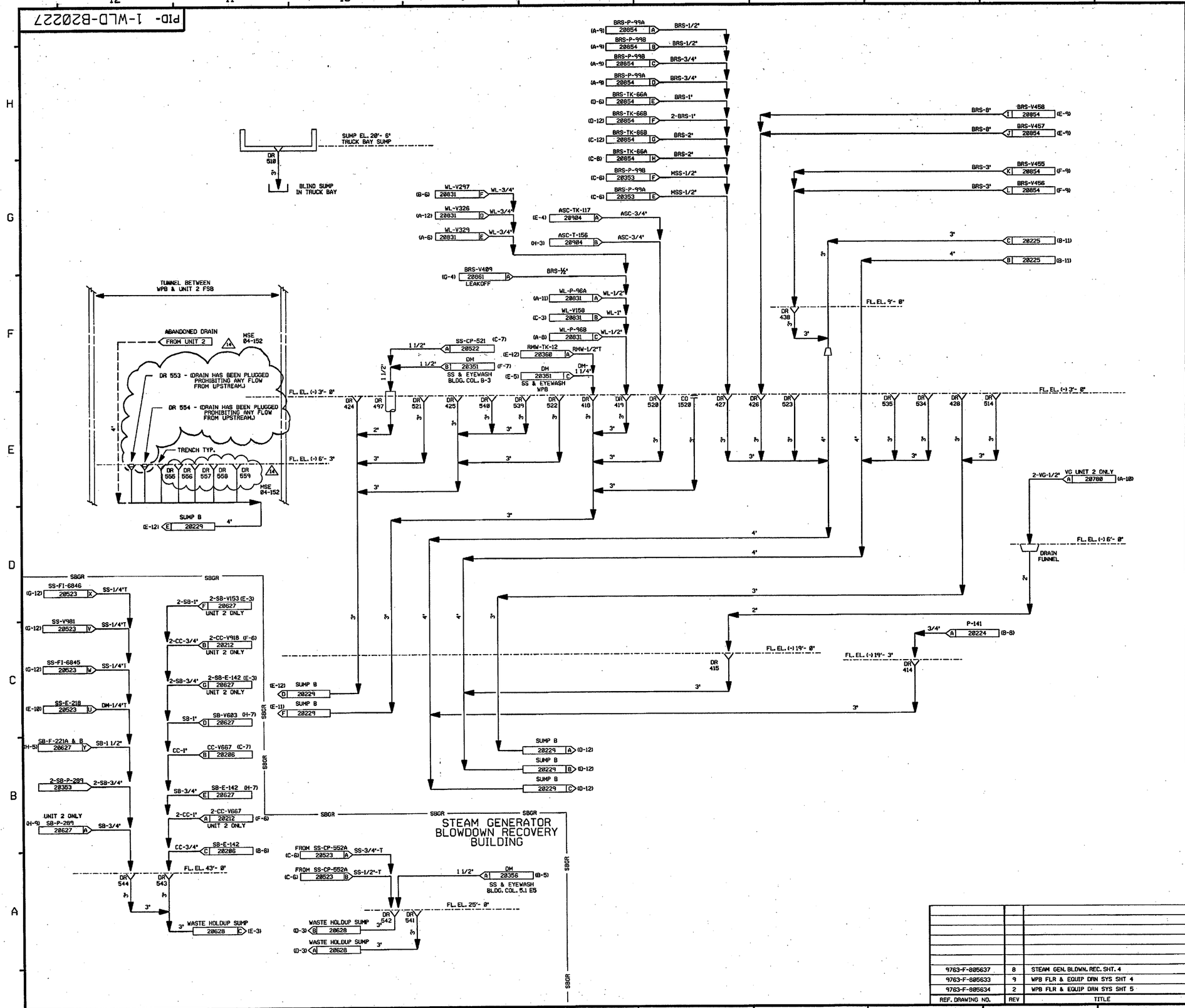

FOR P&ID REFERENCE DRAWINGS, SYMBOLS AND ABBREVIATIONS REFER TO DRAWINGS P&ID - LEGEND 1 AND P&ID - LEGEND 2

DRAINS ON THIS DRAWING

414	425	497	522	540	553 558
415	426	510	523	541	554 559
418	427	514	534	542	555
419	428	520	535	543	556
424	438	521	539	544	557

MSE 84-152 14

CLEANOUTS ON THIS DRAWING

1520

NOTES:

1. WORK THIS DRAWING WITH DRAWINGS 20216, 20218 THRU 20226, 20228 & 20229.
2. ALL LINES, EQUIPMENT, COMPONENTS, AND INSTRUMENTS HAVE SYSTEM PREFIX WLD UNLESS NOTED OTHERWISE.
3. ALL LINES, EQUIPMENT, COMPONENTS, AND INSTRUMENTS ARE SAFETY CLASS NNS, UNLESS NOTED OTHERWISE.
4. △ INDICATES REVISION LEVEL.
5. DELETED

REV	DATE	DSGN	CHKD	CE	DESCRIPTION
14	11-2-04	BCS	JM	RSG	INCORP MSE 84-152 REV. 0
13	7-24-03	BCS	JM	MKC	INCORP MSE 03-147 REV. 0
12	1-21-94	DWS	MRB	RSG	INCORP DCR 86-174 CA 0
11	7-17-92	MRB	BCL	RSG	INCORP DCR 86-538 CA 0
10	3/23/92	MRB	BCL	RSG	INCORP MMOD 91-501 CA 0
9	8/21/91	MRB	JM	PEB	INCORPORATED 90-7 CA 03
8	3/16/90	MRB	APL	RSG	INCORPORATED 87-33 CA 5
7	5/26/89	GPM	PAL	IM	INCORPORATED 87-110 CA 11
6	11/7/88	MRB	GPM	RRC	REVISED: NOTE 3 ADDED: CONTINUATION TAG AND LOCATION COORDINATE MADE MINOR DRAFTING ENHANCEMENTS FOR CLARITY
5	10/23/87	MPW	BCL	PAG	ADDED: DRAIN LINES FROM P-99 A&B CONT. DWG NUMBERS AND LOCATION COORDINATES. DELETED: UNIT 2 LINE, AS LINES (SHOWN ON DWG. 20576)
4	4/8/87	WDS	MRJ	VWS	INCORP DCR 87-0013.
3	12/11/86	CSB	WRD	RRC	ADDED P&ID REF DWG NOTE. DRAIN LINES TO DR 419 PER ECA 19/1115386. CONT FLG COORDS, UNIT 2 DRAIN LINE PER LINE BY LINE VERIFICATION.
2	6/19/86	JDM	DWS	JMS	REV PER UE&C P&ID 805637 REV-7
1	4/2/86	GD	JDM	WFD	ISSUED FOR OPERATIONS
0	3/29/85	MLS	JNM	WFD	ISSUED FOR FIELD VERIFICATION

REF. DRAWING NO.	REV	TITLE
9763-F-805637	8	STEAM GEN. BLDWN. REC. SHT. 4
9763-F-805633	9	WPB FLR & EQUIP DRN SYS SHT 4
9763-F-805634	2	WPB FLR & EQUIP DRN SYS SHT 5

FPL ENERGY Seabrook Station

WASTE PROCESSING BUILDING
DRAINS
SHT. 3 OF 3

PID- 1-WLD-B20227

10/28/04

PID- 1-WLD-B20228

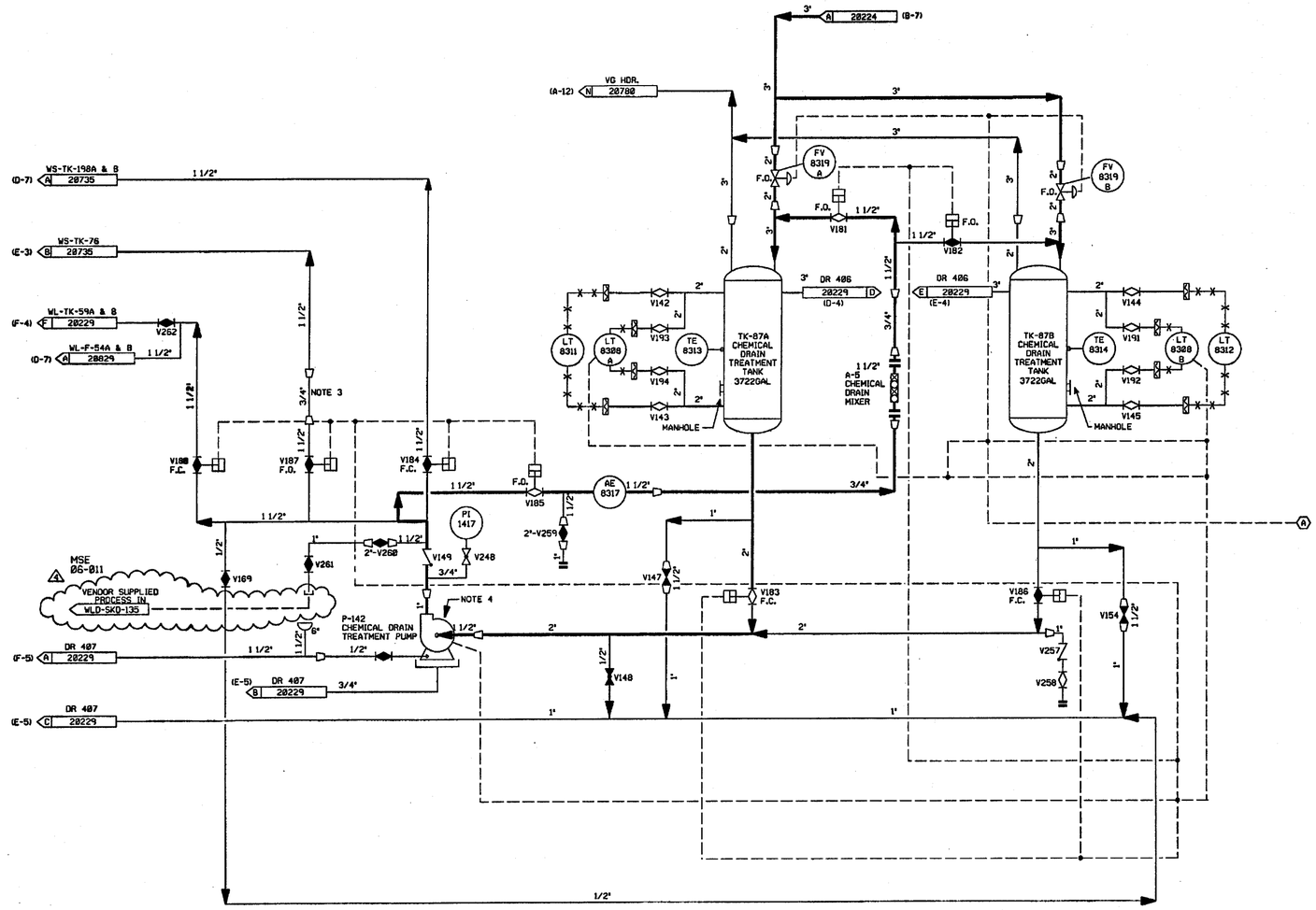

FOR P&ID REFERENCE DRAWINGS, SYMBOLS AND ABBREVIATIONS REFER TO DRAWINGS P&ID - LEGEND 1 AND P&ID - LEGEND 2

INSTRUMENTATION IDENTIFICATION

(A) TO WLD-LT-8305 & WLD-P-141 ON DWG. B20224.

NOTES:

1. WORK THIS DRAWING WITH DRAWINGS 20216, 20218, THRU 20227 & 20229.
2. ALL LINES, EQUIPMENT, COMPONENTS, AND INSTRUMENTS HAVE SYSTEM PREFIX WLD UNLESS NOTED OTHERWISE.
3. FLOW RESTRICTION PIPE SECTION.
4. SEE DWG. DM-20353 FOR DM SUPPLY TO MECHANICAL SEALS.
5. ALL LINES, EQUIPMENT, COMPONENTS, AND INSTRUMENTS ARE SAFETY CLASS N.
6. △ INDICATES REVISION LEVEL.

REV	DATE	DSGN	CHKD	CE	DESCRIPTION
4	4/20/06	BCS	JWL	RJP	INCORP MSE 86-011 REV. 00
3	6/30/87	MPW	DWS	RRC	INCORP DCR 86-673 AND DCR 86-266 CA03.
2	11/18/86	FJR	WRD	RRC	ADDED CONT. FLAG COORD'S. & NOTE 6.
1	4/2/86	GD	JDM	WFD	ISSUED FOR OPERATIONS
0	3/29/85	MLS	JNM	WFD	ISSUED FOR FIELD VERIFICATION

REF. DRAWING NO.	REV	TITLE
9763-F-805632	10	CHEMICAL DRN SYSTEM NUCLEAR

FPL ENERGY Seabrook Station

WASTE PROCESSING LIQUID DRAINS
WASTE PROCESSING BUILDING
CHEMICAL DRAIN SYSTEM

PID- 1-WLD-B20228

04/20/06

PID- 1-WLD-B20229

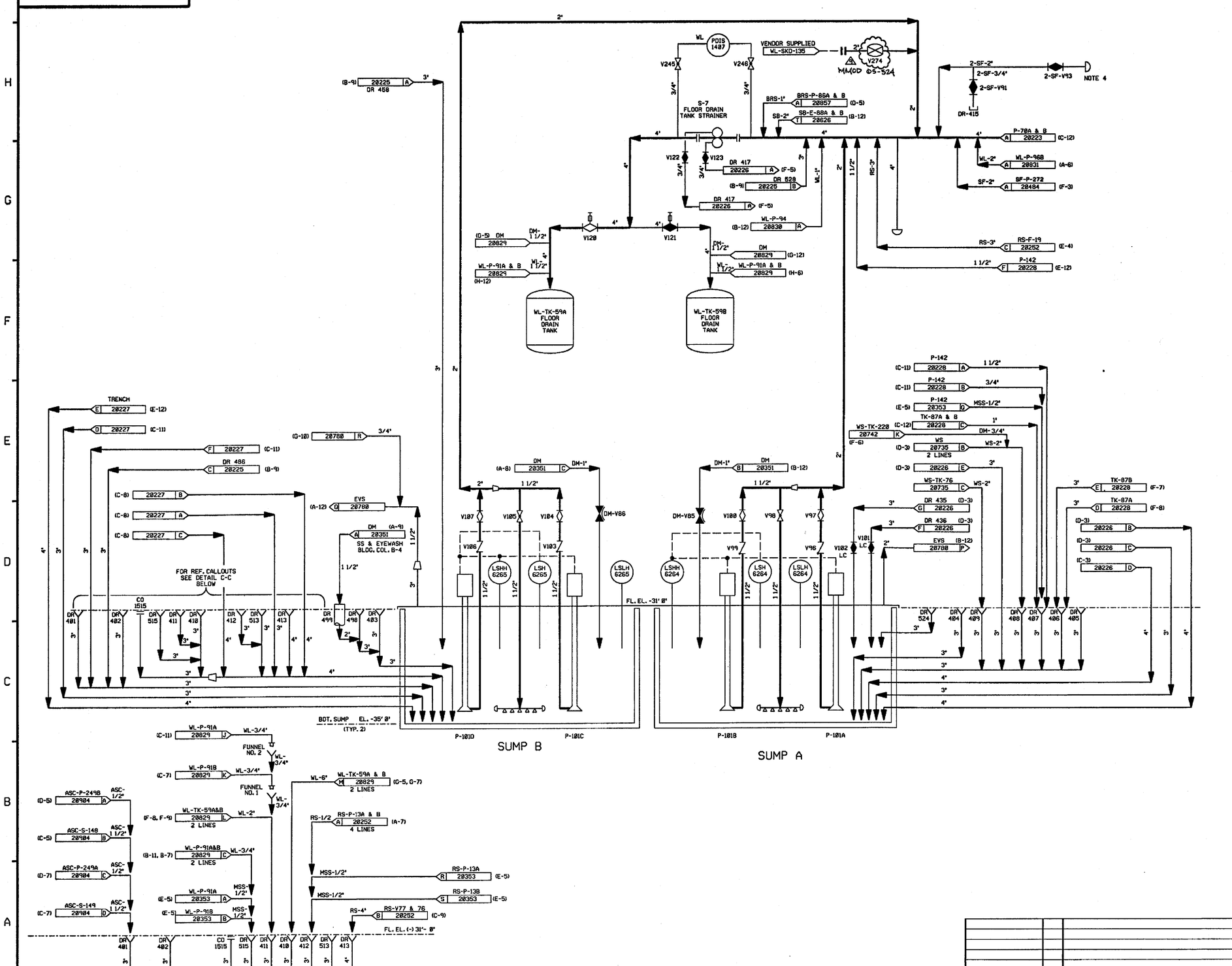

FOR P&ID REFERENCE DRAWINGS, SYMBOLS AND ABBREVIATIONS REFER TO DRAWINGS P&ID - LEGEND 1 AND P&ID - LEGEND 2

DRAINS ON THIS DRAWING

401	408	486
402	409	498
403	410	499
404	411	513
405	412	515
406	413	524
407	458	

CLEANOUT ON THIS DRAWING

1515

NOTES:

1. WORK THIS DRAWING WITH DRAWINGS 20216, 20218 THRU 20228.
2. ALL LINES, EQUIPMENT, COMPONENTS, & INSTRUMENTS HAVE SYSTEM PREFIX WLD UNLESS NOTED OTHERWISE.
3. ALL LINES, EQUIPMENT, COMPONENTS, & INSTRUMENTS ARE SAFETY CLASS NNS.
4. J LINES CAPPED TO ISOLATE UNIT 1 FROM UNIT 2.
5. △ INDICATES REVISION LEVEL.

REV	DATE	DSGN	CHKD	CE	DESCRIPTION
9	6/13/06	BCS	JM	PJH	INCORP MMOD 85-524 DCN-02
8	2/13/03	BCS	MPW	JM	INCORP MSE 01-288 REV. 0
7	6/17/95	MRB	BCL	VWS	INCORP DCR 91-32 CA0
6	1/4/91	HP	JM	BCL	INCORP. DCR 86-556 CA-02 REVISED: NOTE 3
5	8/28/87	MPW	PAL	RRC	ADDED: CONT NO'S: INCORP DCR 86-266
4	4/8/87	WDS	PAL	VWS	INCORP. DCR 87-0013
3	12/17/86	WDS	PAL	RRC	ADDED CONT. DWG. COORDS. DRAIN NO'S 458, 486 & 528. NOTE 5 AND NOTE FOR P&ID LEGENDS 1 & 2. REVISED CONT DWG NUMBERS AND REF DWG REVISIONS. DELETED ALPHA PREFIX FROM DWG NO'S IN NOTE 1.
2	6/16/86	DWS	DWS	RRC	INCORP. ECA 19/1161248 & 19/116172A ADDED DM CONT. CORRECTED STRAINER CONFIGURATION.
1	4/2/86	GD	JDM	WFD	ISSUED FOR OPERATIONS
0	3/29/85	GD	JNM	WFD	ISSUED FOR FIELD VERIFICATION

REF. DRAWING NO.	REV	TITLE
9763-F-805633	9	WPB FLR. & EQUIP. DRAIN SYS. SHT. 4
9763-F-805619	11	WL STOR. & FILT.
9763-F-805644	1	WPB FLR. & EQUIP. DRAIN SYS. SHT. 2
9763-F-805634	3	WPB FLR. & EQUIP. DRAIN SYS. SHT. 5

FPL ENERGY Seabrook Station

WASTE PROCESSING LIQUID DRAINS
WASTE PROCESSING BUILDING
SUMPS

PID- 1-WLD-B20229

06/12/06

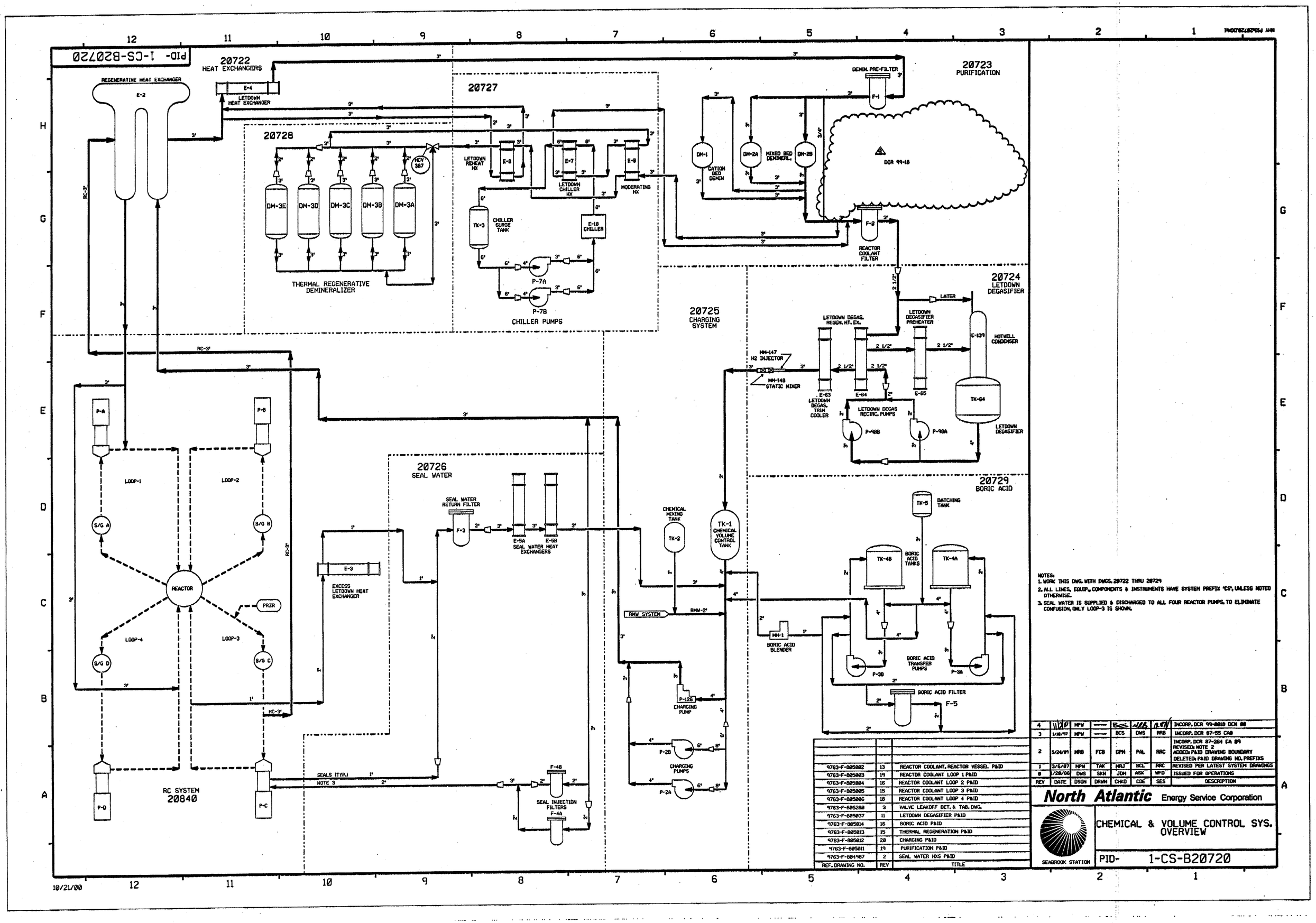

NOTES:
1. WORK THIS DWG. WITH DWGS. 20722 THRU 20729
2. ALL LINES, EQUIP., COMPONENTS & INSTRUMENTS HAVE SYSTEM PREFIX "CS", UNLESS NOTED OTHERWISE.
3. SEAL WATER IS SUPPLIED & DISCHARGED TO ALL FOUR REACTOR PUMPS. TO ELIMINATE CONFUSION, ONLY LOOP-3 IS SHOWN.

REF. DRAWING NO.	REV	TITLE
9763-F-805002	13	REACTOR COOLANT, REACTOR VESSEL P&ID
9763-F-805003	19	REACTOR COOLANT LOOP 1 P&ID
9763-F-805004	16	REACTOR COOLANT LOOP 2 P&ID
9763-F-805005	15	REACTOR COOLANT LOOP 3 P&ID
9763-F-805006	18	REACTOR COOLANT LOOP 4 P&ID
9763-F-805260	3	VALVE LEAKOFF DET. & TAB. DWG.
9763-F-805037	11	LETDOWN DEGASIFIER P&ID
9763-F-805014	16	BORIC ACID P&ID
9763-F-805013	15	THERMAL REGENERATION P&ID
9763-F-805012	28	CHARGING P&ID
9763-F-805011	19	PURIFICATION P&ID
9763-F-804987	2	SEAL WATER HXS P&ID

REV	DATE	DSGN	DRWN	CHKD	CDE	SES	DESCRIPTION
4	[illegible]	MPW	—	BCS	[illegible]	[illegible]	INCORP. DCR 99-0018 DCN 00
3	1/28/97	MPW	—	BCS	DWS	RRB	INCORP. DCR 97-55 CA0
2	5/24/89	MRB	FCB	GPM	PAL	RRC	INCORP. DCR 87-264 CA 89 REVISED: NOTE 2 ADDED: P&ID DRAWING BOUNDARY DELETED: P&ID DRAWING NO. PREFIXS
1	3/6/87	MPW	TAK	MRJ	BCL	RRC	REVISED PER LATEST SYSTEM DRAWINGS
0	1/28/86	DWS	SKN	JDH	ASK	WFD	ISSUED FOR OPERATIONS

North Atlantic Energy Service Corporation

SEABROOK STATION

CHEMICAL & VOLUME CONTROL SYS. OVERVIEW

PID- 1-CS-B20720

PID- 1-CS-B20722

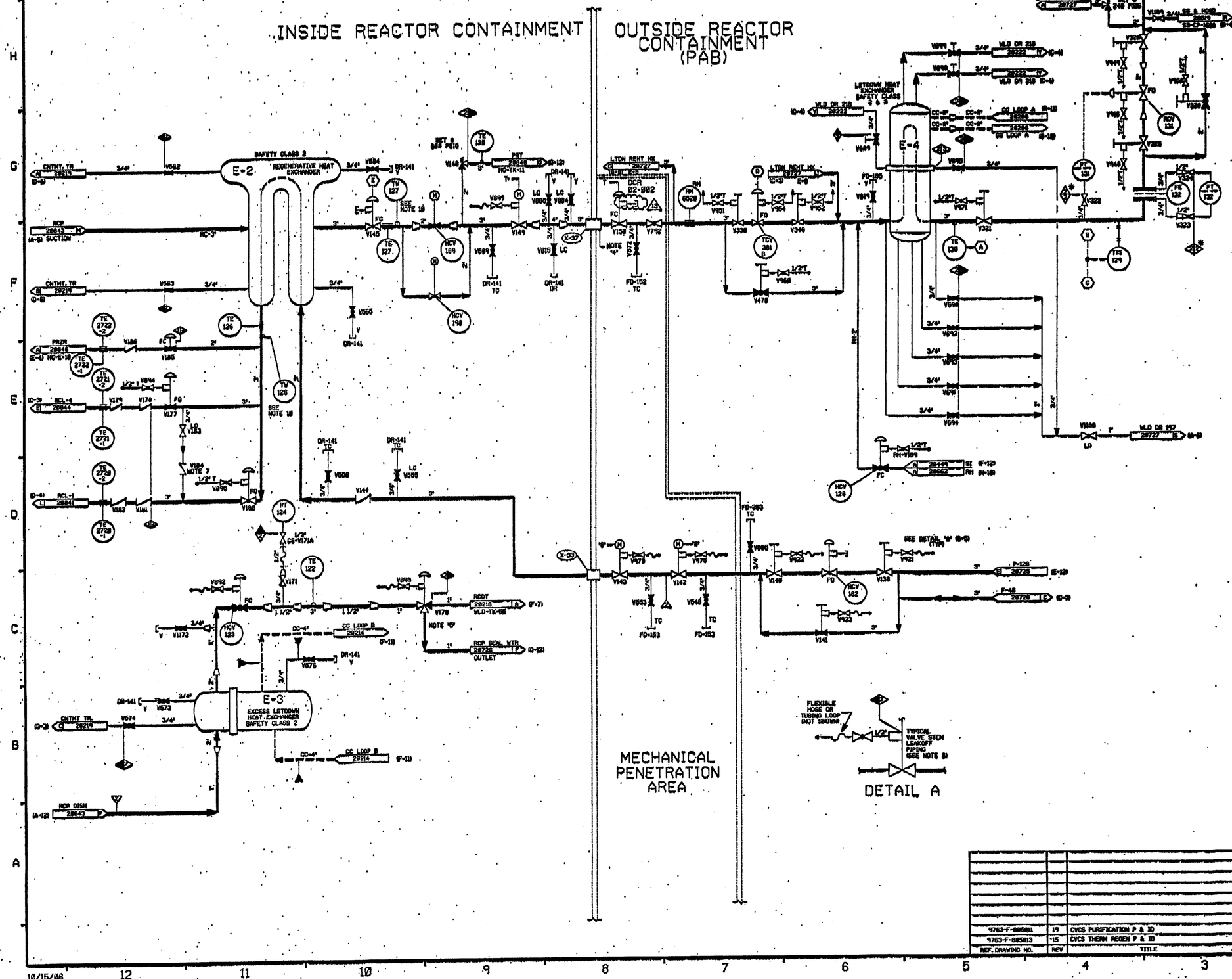

FOR PAID REFERENCE DRAWING SYMBOLS AND ABBREVIATIONS REFER TO DRAWINGS PAID - LEGEND 1 AND PAID - LEGEND 2

NOTES:
1) WORK THIS DWG WITH DWGS. 28720 & 28723 THRU 28729.
2) ALL LINES, EQUIP., COMPONENTS & INSTRUMENTS HAVE SYSTEM PREFIX "CS", UNLESS NOTED OTHERWISE.
3) VENT AND DRAIN CODE BREAKS ARE AT THE DOWNSTREAM END OF THE OUTER ISOLATION VALVE PER 1-MAV-08032 UNLESS NOTED OTHERWISE.
4) DELAY TIME SCS TO HERE MUST BE 45 SECONDS MIN.
5) VALVE FAILS WITH FLOW TO SEAL WATER RETURN FILTER.
6) DELETED
7) SPRING LOADED CHECK VALVE.
8) REFER TO DRAWING VSL-28774 FOR VALVE LEAKOFFS
9) INSTRUMENT REFERENCE.
(A) TO CONTROL VALVE TV-128 ON DWG. 28666.
(B) TO 3-WAY VALVE TCV-129 ON DWG. 28723.
(C) TO T20-282 ON DWG. 28726.
(D) TO TCV-361A, TE-361, TCV-395 & TE-395 ON DWG. 28727.
(E) FOR AUTO CLOSE SIGNALS SEE LOGIC 1-MAV-08357
10) TV-126 AND TV-127 TO BE ABANDONED IN PLACE.

PORTIONS OF THIS DRAWING ARE
NUCLEAR SAFETY RELATED

REV	DATE	DSGN	CHKD	CE	DESCRIPTION
13	[illegible]	BCS	[illegible]	[illegible]	INCORP. DCR 92-882 DCN-09
12	10/14/96	BCS	JH	RRB	INCORP. DCR 95-883 DCN 08 & MHOD 95-884 DCN 09 PARTIAL INCORP. DCR 92-882 DCN-09
11	10/16/93	BCS	MPV	RRB	INCORP. DCR 92-882 DCN 01,02,03
10	9/12/92	BCS	JH	TAS	INCORP. DCR 89-881 DCN 08
9	6/11/90	MPV	BCS	RMH	INCORP. DCR 91-10 DCN 08
8	6/18/91	DMS	RKS	DJH	INCORP MHOD 470868 DCN#08
7	4/13/91	MRB	BCL	JEV	INCORP. MHOD 91-525 CA8
6	12/5/91	MRB	PAL	MFD	INCORP. DCR 91-12 CA8
5	5/9/89	MRB	GPM	GRM	INCORP. DCR 87-299 CA 04 REVISED NOTE 2
4	10/30/87	GPM	DMS	PAS	REVISED NOTE 3 & 9 REVISED VALVE INSTALLATION CONFIGURATION ADDED NOTE 10 ADDED NOTE AT [illegible] ADDED DCR 87-[illegible] REF DWG. [illegible] CL BOUNDARY.
3	11/26/86	MRJ	MRD	RRC	ADDED DWG CONT COOPER, REMOVED CODE FLAGS PER NOTE 2, LEAKOFF VLV CODES PER DETAIL A, REVISED DRAIN PIPING PER ASME/LT CONDITIONS.
2	1/28/86	DMS	JDH	[illegible]	ISSUED FOR OPERATIONS
1					

REF. DRAWING NO.	REV	TITLE
9763-F-085811	19	CVCS PURIFICATION P & ID
9763-F-085813	15	CVCS THERM REGEN P & ID

FPL ENERGY Seabrook Station

CHEMICAL & VOLUME CONTROL SYS
HEAT EXCHANGERS
DETAIL

PID- 1-CS-B20722

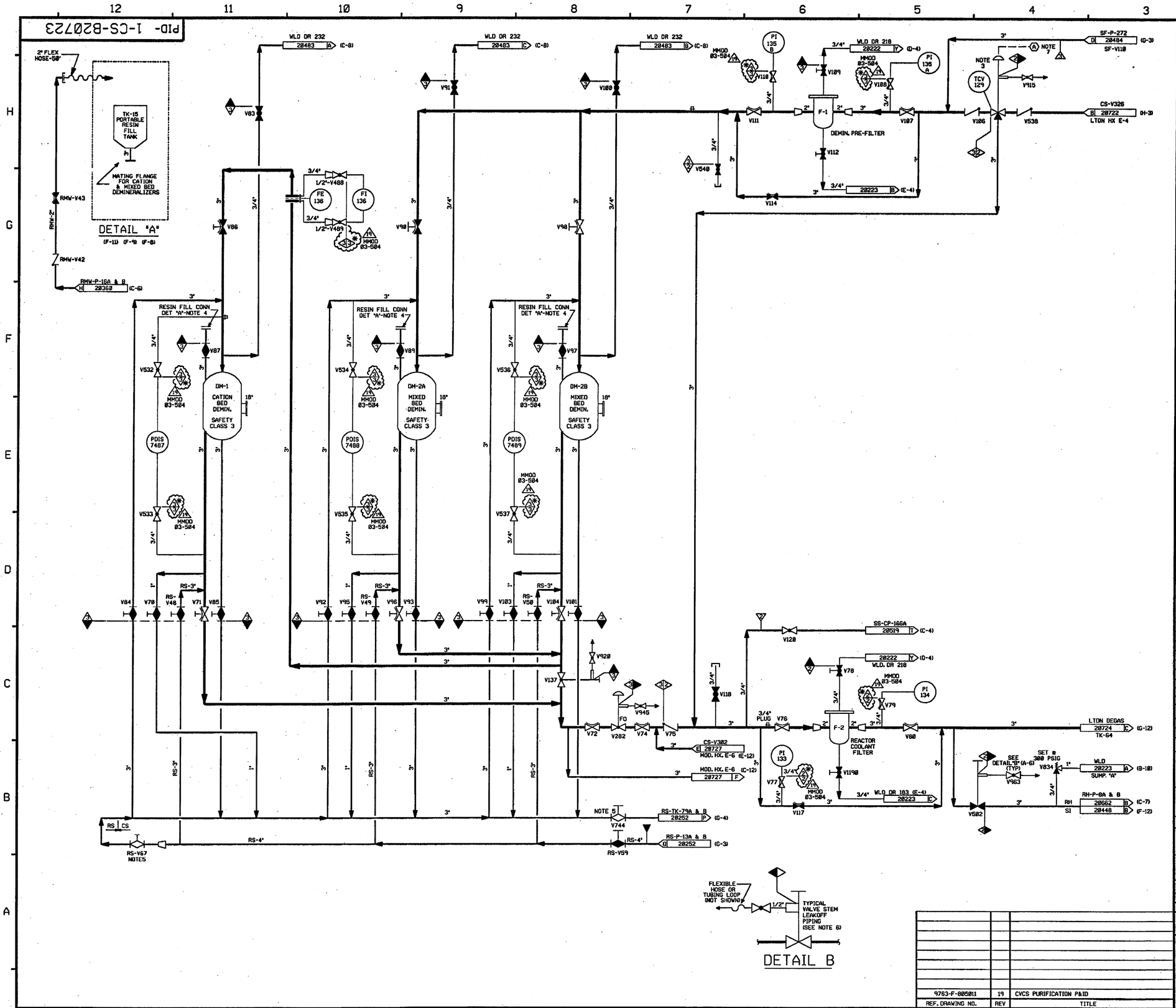

FOR P&ID REFERENCE DRAWINGS, SYMBOLS AND ABBREVIATIONS REFER TO DRAWINGS P&ID - LEGEND 1 AND P&ID - LEGEND 2

NOTES:

1. WORK THIS DWG WITH DWGS. 28728, 28722, & 28724 THRU 28729.
2. ALL LINES, EQUIPMENT, COMPONENTS & INSTRUMENTS HAVE SYSTEM PREFIX "CS", UNLESS NOTED OTHERWISE.
3. VALVE FAILS WITH FLOW BY-PASSING THE DEMINERALIZERS & GOING TO CS-F-2
4. BLIND FLGS. INSTALLED WITHOUT GASKET
5. THIS VALVE TO BE CLOSED PRIOR TO ANY RESIN SLUICING OPERATIONS.
6. REFER TO DRAWING VSL-28774 FOR VALVE LEAKOFFS.
7. INSTRUMENT REFERENCE (A) LETDOWN EXCHANGER CS-E-4 & CS-E-8 OUTLET TEMP. TIS-129 & TIS-382 ON DWG. 28722
8. VENTS, DRAINS AND TEST CONNECTION CODE BREAKS ARE AT THE DOWNSTREAM END OF THE OUTER ISOLATION VALVE PER 1-NHY-885111, UNLESS NOTED OTHERWISE.
9. △ INDICATES REVISION LEVEL.
10. DELETED
11. DELETED

PORTIONS OF THIS DRAWING ARE

NUCLEAR SAFETY RELATED

REV	DATE	DSGN	CHKD	CE	DESCRIPTION
19	4-16-04	JM	BCS	SAB	INCORP MMOD 03-504 DCR 00
18	11/2/00	MPW	BCS	RPN	INCORP DCR 99-18 DCN 00
17	6/12/00	BCS	DWS	RWM	PARTIAL INCORP DCR 99-18 DCN 00
16	1/10/97	MPW	BCS	RRB	INCORP DCR 87-55 CA0 AND DCN 01
15	3/21/96	BCS	DWS	RJF	INCORP MMOD 940574 CA*01
14	2/28/96	DWS	BCS	VWS	INCORP MMOD 940574 CA*0
13	3/4/94	MRB	BCL	GRM	INCORP. MMOD 92-553, CA01
12	4/5/93	BCL	MPW	WFZ	MMOD 91-587, CA0
11	4/13/92	MRB	BCL	JEV	MMOD 91-515, CA0
10	10/8/91	MRB	JM	ES	INCORP. MMOD 91-511 CA0 AND MMOD 91-625, CA0
9	2/26/91	MRB	RMC	BCL	INCORP. MMOD 90-648 CA01
8	9/24/90	MRB	BMC	BCL	INCORP MMOD 90-516 CA0
7	5/24/89	MRB	GPM	RRC	INCORPORATED DCR 87-264 CA 09 REVISED: NOTE 2
6	5/25/88	GPM	APL	DJM	INCORP. DCR 87-323 REV'D: PIPING PER AS INSTALLED CONF.; VALVE POSITION PER DWG. 508272 ADDED: DETAIL B, NOTE AT CS-V983 & CLASS DESIGNATION. DELETED: REF. DWG. NNS-1 CL. BOUNDARY
5	3/20/87	MRJ	WDS	RRC	ADDED 3" AND FLANGE PER ECA 99/116756A ADDED NOTE AND DWG COORD'S. FOR DETAIL A, ADDED CONT FLAG LETTERS AND NOTE 9, DELETED DETAIL "B".
4	12/12/86	JDM	PAL	RRC	INCORP ECA 99/116756A
3	10/17/86	MAP	WRD	RRC	ADDED DWG LOC COORD. DELETED CLASS BREAKS & CODE BREAKS. ADDED NOTE 8 REVISED TO CLARIFY DUPLICATION OF ASSOCIATED SYSTEMS.
2	8/22/86	MPW	GRD	PHH	REINCORP ECA 99/114510A. INCORP NCR 82/1179F, DCN 86/177A. ADDED VALVES RH-V8826 THRU V8838. ADDED VALVE V8089 PER FP-71272. CORRECTED CONTINUATIONS & REVD PER AS-BUILT CONFIG.
1	6/23/86	WES	DWS	RRC	INCORPORATED ECA 99/114510A, 19/100849A. INCORP 885011-REV 19
0	1/22/86	DWS	JDM	WFD	ISSUED FOR OPERATIONS

REF. DRAWING NO.	REV	TITLE
9763-F-885011	19	CVCS PURIFICATION P&ID

FPL ENERGY Seabrook Station

CHEMICAL & VOLUME CONTROL SYS.
PURIFICATION
DETAIL

PID- 1-CS-B20723

11/01/06

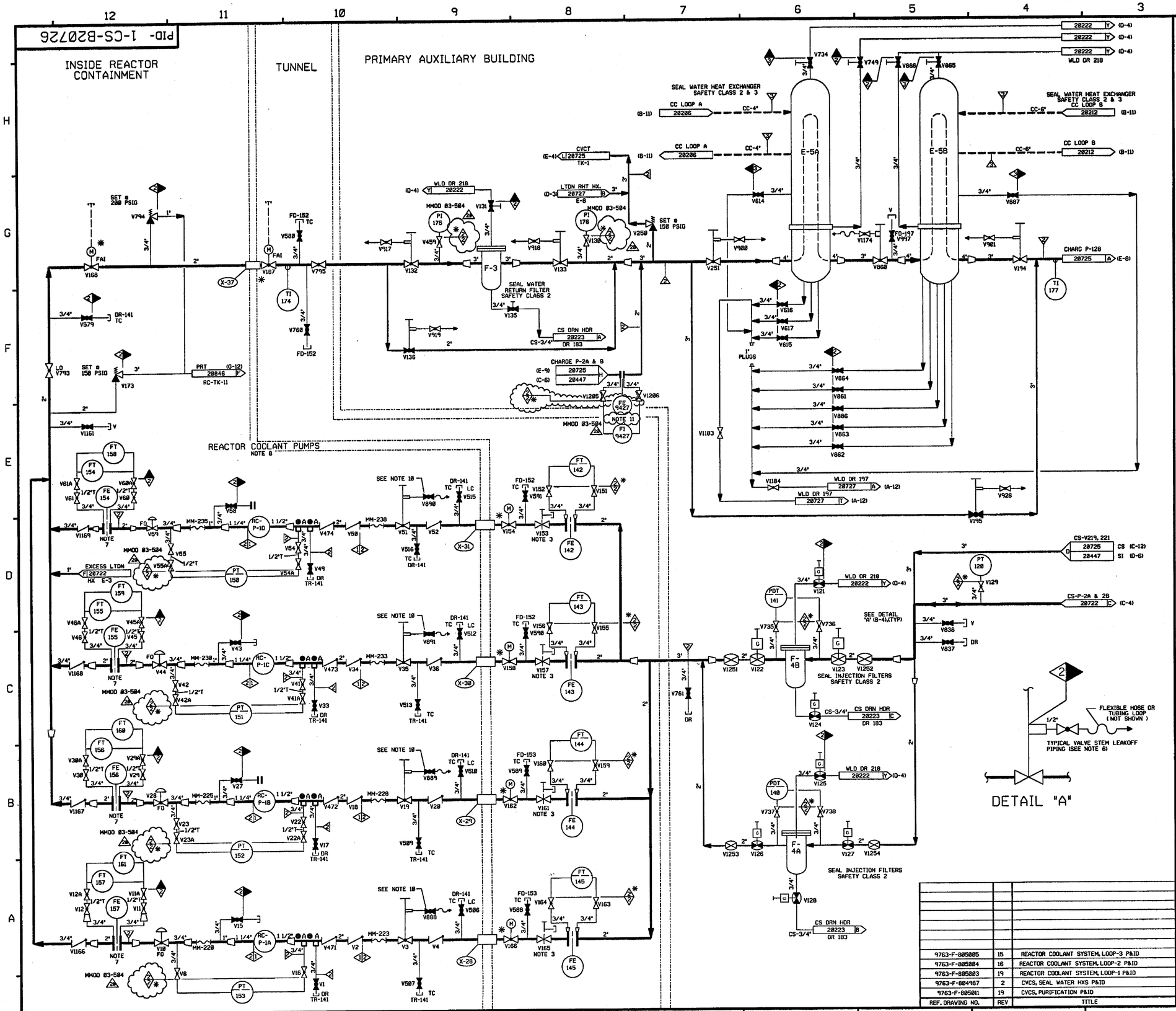

FOR P&ID REFERENCE DRAWINGS, SYMBOLS AND ABBREVIATIONS REFER TO DRAWINGS P&ID - LEGEND 1 AND P&ID - LEGEND 2

NOTES:

1. WORK THIS DWG WITH DWGS. 20720, 20722 THRU 20725 & 20727 THRU 20729.
2. ALL PIPING, VALVES, EQUIP. & INSTRUMENTS HAVE SYSTEM PREFIX "CS", UNLESS NOTED OTHERWISE.
3. 2" NEEDLE VALVE WITH 1" INTERVALS.
4. ● -INDICATES 3/8" FLOW RESTRICTOR INSTALLED. SEE APPLICABLE DETAIL ON DWG RC-20848.
5. VENTS, DRAINS & TEST CONN. CODE BREAKS ARE AT THE DOWNSTREAM END OF THE OUTER ISOLATION VALVE PER 1-NHY-805111, UNLESS NOTED OTHERWISE.
6. REFER TO DRAWING VSL-28774 FOR VALVE LEAKOFFS.
7. ORIFICE PLATE IS NON-ASME.
8. REACTOR COOLANT PUMPS SHOWN ON DWG'S:
   RC P-1A-20841
   RC P-1B-20842
   RC P-1C-20843
   RC P-1D-20844
9. △ INDICATES REVISION LEVEL.
10. VALVE STEM LEAK-OFF ISOLATION VALVES V888, V889, V890 & V891 ARE TO BE MAINTAINED CLOSED. VALVE STEMM LEAK-OFF TO BE CONSIDERED INOPERABLE.
11. NON-ASME FLOW ELEMENT. MMOD 03-584

PORTIONS OF THIS DRAWING ARE

NUCLEAR SAFETY RELATED

REV	DATE	DSGN	CHKD	CE	DESCRIPTION
20	9/22/06	BCS	JBM	PJT	INCORP MMOD 03-584 DCN-00
19	4/23/99	DWS	BCS	GRM	INCORP DCR 980045 DCN#04
18	7/1/97	MPW	DWS	JEV	DCR 960007 CA#00 (FINAL)
17	6/13/97	DWS	MPW	JEV	INCORP DCR 970008 DCN#00 & DCR 960007 CA#00 (PARTIAL)
16	5/16/97	MPW	DWS	WFZ	INCORP. DCR 97-16 CA-0
15	2/25/97	BCS	MPW	RCP	INCORP. DCR 94-46 CA-0
14	11/28/96	MPW	BCS	RRB	INCORP. DCR 86-118 CA-0
13	4-14-94	BCL	MPW	DMD	INCORP. MMOD-93-517 CA-0
12	4-5-93	BCL	MPW	WFZ	INCORP. MMOD-91-507 CA-0

REF. DRAWING NO.	REV	TITLE
9763-F-805005	15	REACTOR COOLANT SYSTEM, LOOP-3 P&ID
9763-F-805004	16	REACTOR COOLANT SYSTEM, LOOP-2 P&ID
9763-F-805003	19	REACTOR COOLANT SYSTEM, LOOP-1 P&ID
9763-F-804987	2	CVCS, SEAL WATER HXS P&ID
9763-F-805011	19	CVCS, PURIFICATION P&ID

FPL ENERGY Seabrook Station

CHEMICAL & VOLUME CONTROL SYS.
SEAL WATER
DETAIL

PID- 1-CS-B20726

09/19/06

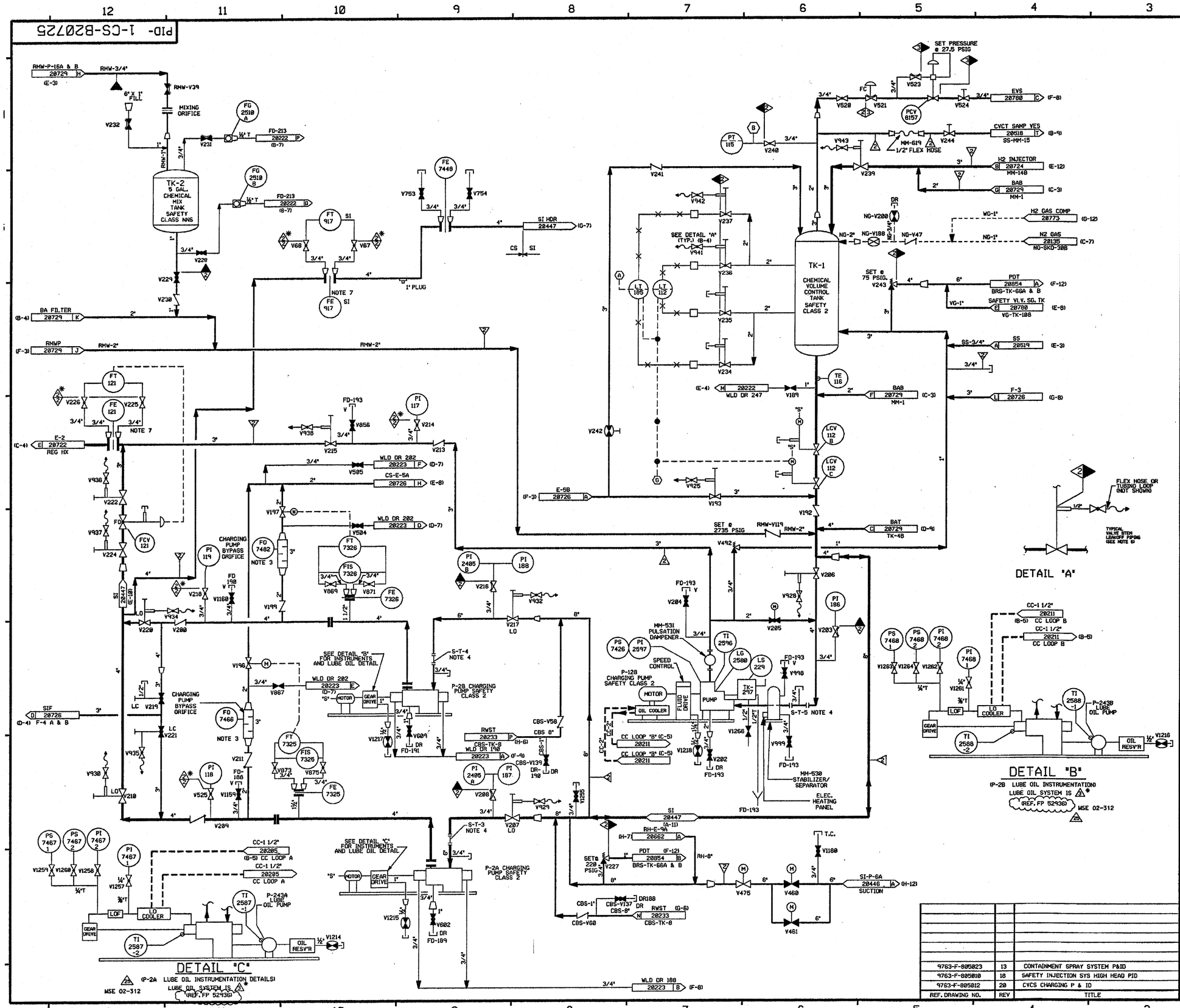

FOR P&ID REFERENCE DRAWINGS, SYMBOLS AND ABBREVIATIONS REFER TO DRAWINGS P&ID - LEGEND 1 AND P&ID - LEGEND 2

NOTES:

1. WORK THIS DWG WITH 20720 THRU 20724 & 20726 THRU 20729. PORTIONS OF THIS DRAWING ARE DUPLICATED ON DRAWING SI-20447 DUE TO DUAL SYSTEM FUNCTIONS.
2. ALL LINES, EQUIPMENT, COMPONENTS & INSTRUMENTS HAVE SYSTEM PREFIX "CS", UNLESS NOTED OTHERWISE.
3. MIN. OF 5' OF STRAIGHT RUN AFTER MIN. FLOW ORIFICE.
4. PERMANENT SPOOL PIECE INSTALLATION SHOWN TEMP. SPOOL PIECE WITH STRAINER, PRESSURE INSTRUMENTS, VENTS & DRAINS INSTALLED ONLY DURING FLUSHING OPERATIONS & IS REMOVED BEFORE START-UP.
5. VENT AND DRAIN CODE BREAKS ARE AT THE DOWNSTREAM END OF THE OUTER ISOLATION VALVE PER 1-NHY-885111 UNLESS NOTED OTHERWISE.
6. REFER TO DRAWING VSL-20774 FOR VALVE LEAKOFFS.
7. ORFICE PLATE NON-ASME
8. INSTRUMENT REFERENCE
   - (A) TO LCV-112A & LV-112A ON DWG. 20724.
   - (B) TO WG-PIC-8156 ON P&ID WG-20773
   - (G) TO LCV-112E & LCV-112D ON DWG. 20233.
9. △ INDICATES REVISION LEVEL.

PORTIONS OF THIS DRAWING ARE

NUCLEAR SAFETY RELATED

REV	DATE	DSGN	CHKD	CE	DESCRIPTION
25	5/9/03	BCS	JM	MPW	REINCORP. MSE 02-312 REV. 00
24	3/5/03	BCS	JM	MPW	INCORP. MSE 02-312 REV. 00
23	5/12/02	MPW	JM	RRB	PARTIAL INCORP. DCR 02-0002 DCN 00
22	6/08/01	JM	BCS	RRB	INCORP. DCR 98-0048 DCN 00
21	4/05/01	BCS	MPW	RRB	PARTIAL INCORP. DCR 98-0048 DCN 00
20	11/7/00	BCS	MPW	RRB	INCORP. DCR 98-0052 DCN 00
19	11/2/00	MPW	BCS	RPN	INCORP. DCR 99-0018 DCN 00
18	10/10/00	BCS	MPW	WA	INCORP. DCR 99-0036 DCN-00
17	10/13/00	BCS	MPW	JCM	INCORP. MMOD 99-507 DCN-00

REF. DRAWING NO.	REV	TITLE
9763-F-805023	13	CONTAINMENT SPRAY SYSTEM P&ID
9763-F-805010	18	SAFETY INJECTION SYS HIGH HEAD PID
9763-F-805012	20	CVCS CHARGING P & ID

FPL ENERGY Seabrook Station

CHEMICAL & VOLUME CONTROL CHARGING SYSTEM DETAIL

PID- 1-CS-B20725

03/27/03

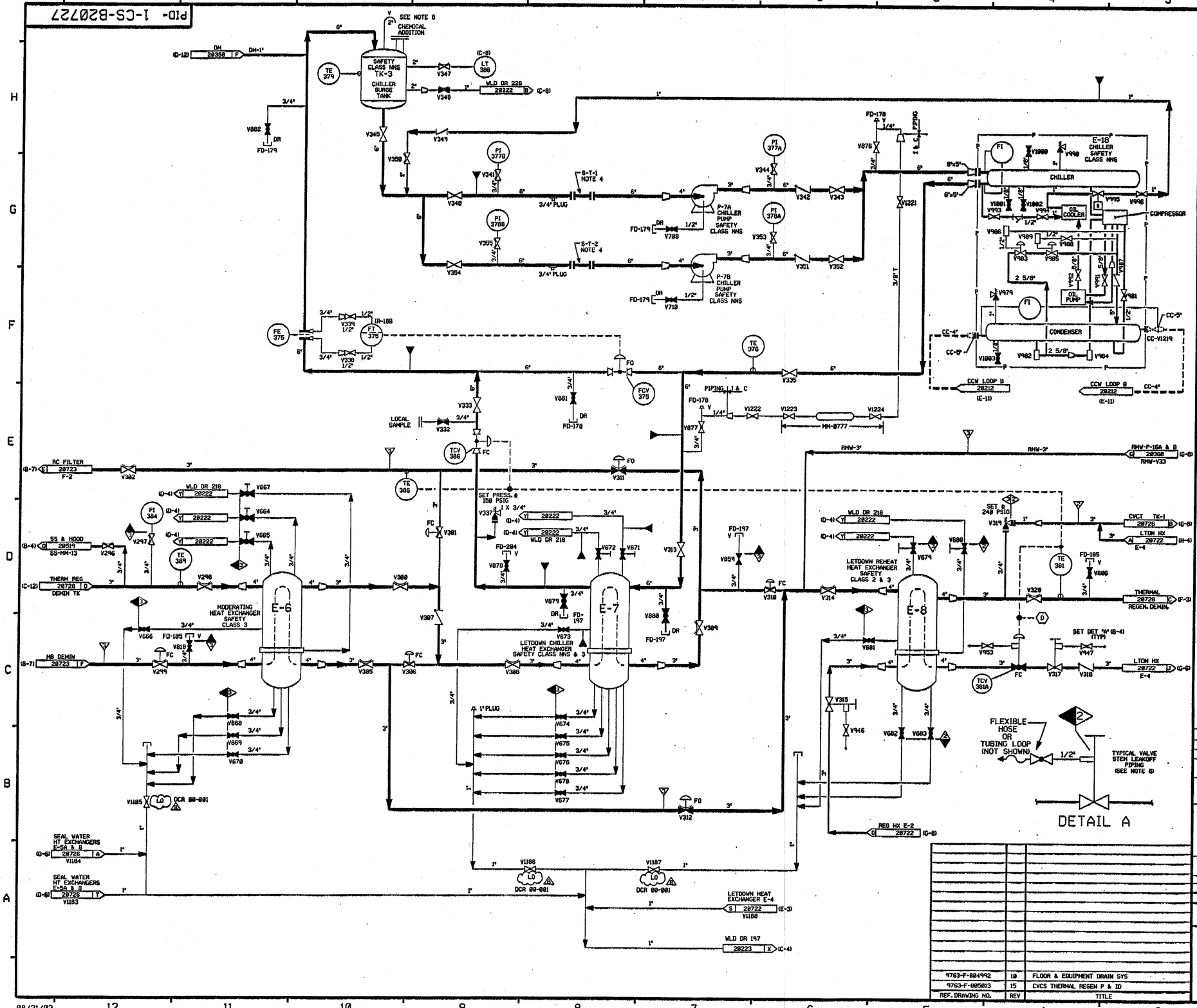

FOR P&ID REFERENCE DRAWINGS, SYMBOLS AND ABBREVIATIONS REFER TO DRAWINGS P&ID - LEGEND 1 AND P&ID - LEGEND 2

NOTES:

1) WORK THIS DWG WITH DWGS 20720 THRU 20726, 20728 & 20729.
2) ALL LINES, EQUIPMENT, COMPONENTS & INSTRUMENTS HAVE SYSTEM PREFIX "CS", UNLESS NOTED OTHERWISE
3) MAIN FLOW SHOWN DURING BORATION PHASE.
4) PERMANENT SPOOL PIECE INSTALLATION SHOWN, TEMP. SPOOL PIECE WITH STRAINER, PRESS. INSTR., VENTS & DRAINS INSTALLED ONLY DURING FLUSHING OPERATIONS AND IS REMOVED BEFORE START-UP.
5) VENT AND DRAIN CODE BREAKS ARE AT THE DOWNSTREAM END OF THE OUTER ISOLATION VALVE PER 1-NHY-805111 UNLESS OTHERWISE NOTED.
6) REFER TO DRAWING VSL-20774 FOR VALVE LEAKOFFS.
7) INSTRUMENT REFERENCES:
   (D) TO CONTROL VALVE TCV-381B ON DWG. B20722
8) WHEN CHILLER LOOP IS IN DRY LAYUP, NITROGEN IS SUPPLIED THROUGH THE TANK VENT. (SEE PID NO-20136)

PORTIONS OF THIS DRAWING ARE

NUCLEAR SAFETY RELATED

REV	DATE	DSGN	DRWN	CHKD	CDE	SES	DESCRIPTION
8	9/12/02	BCS	——	[illegible]	——	[illegible]	INCORP DCR 00-001 DCN-00
7	6/6/00	BCS	——	MRB	MPW	SPF	INCORP MMOD 98-560 DCN-00
6	12/9/94	MPW	——	BCL	DWS	MHO	INCORP MMOD 93-545 CA0
5	3/20/89	MRB	RMC	GPM	APL	DJM	INCORPORATED DCR 88-10 CA1 REVISED: NOTE 2 & 5 ADDED: CONTINUATION COORDINATES.
4	5/25/86	GPM	RMC	APL	BCL	DJM	INCORP. DCR 87-323 ADDED: SET PRESS. FOR V337 PER WESTINGHOUSE "PRECAUTIONS, LIMITATIONS & SET POINTS".
3	10/30/87	GPM	JM	DWS	BCL	PAS	REV'D: NOTE 6, EQUIP CL PER UE&C P&ID, PIPING PER AS INSTALLED CONFIGURATION, AND ECA 99/806183C. DET "A" NOTE, CCW PIPING TO E-18, ADDED: NOTE FOR CS-V-947, CONT. COORD'S, P&ID REF NOTE, FLG'S FOR CS-V-337 & 319. DELETED: REF DWG, TEST BOUNDARY SYMBOL, NNS-1 CL BOUNDARY.
2	9/12/86	MPW	DWS	MAP	BCL	RRC	INCORP. ECA 99/806183C. ADDED SKID PIPING & CLOSED V859, REV CONTINUATION, REF REV & NOTE 6
1	6/16/86	TAK	TAK	BCL	JMCS	RRC	INCORP ECA 99/113343A
0	1/20/86	DWS	GBS	JDM	ASK	WFD	ISSUED FOR OPERATIONS

REF. DRAWING NO.	REV	TITLE
9763-F-804992	10	FLOOR & EQUIPMENT DRAIN SYS
9763-F-805013	15	CVCS THERMAL REGEN P & ID

North Atlantic Energy Service Corporation

SEABROOK STATION

CHEMICAL VOLUME & CONTROL SYSTEM THERMAL REGENERATION DETAIL

PID- 1-CS-B20727

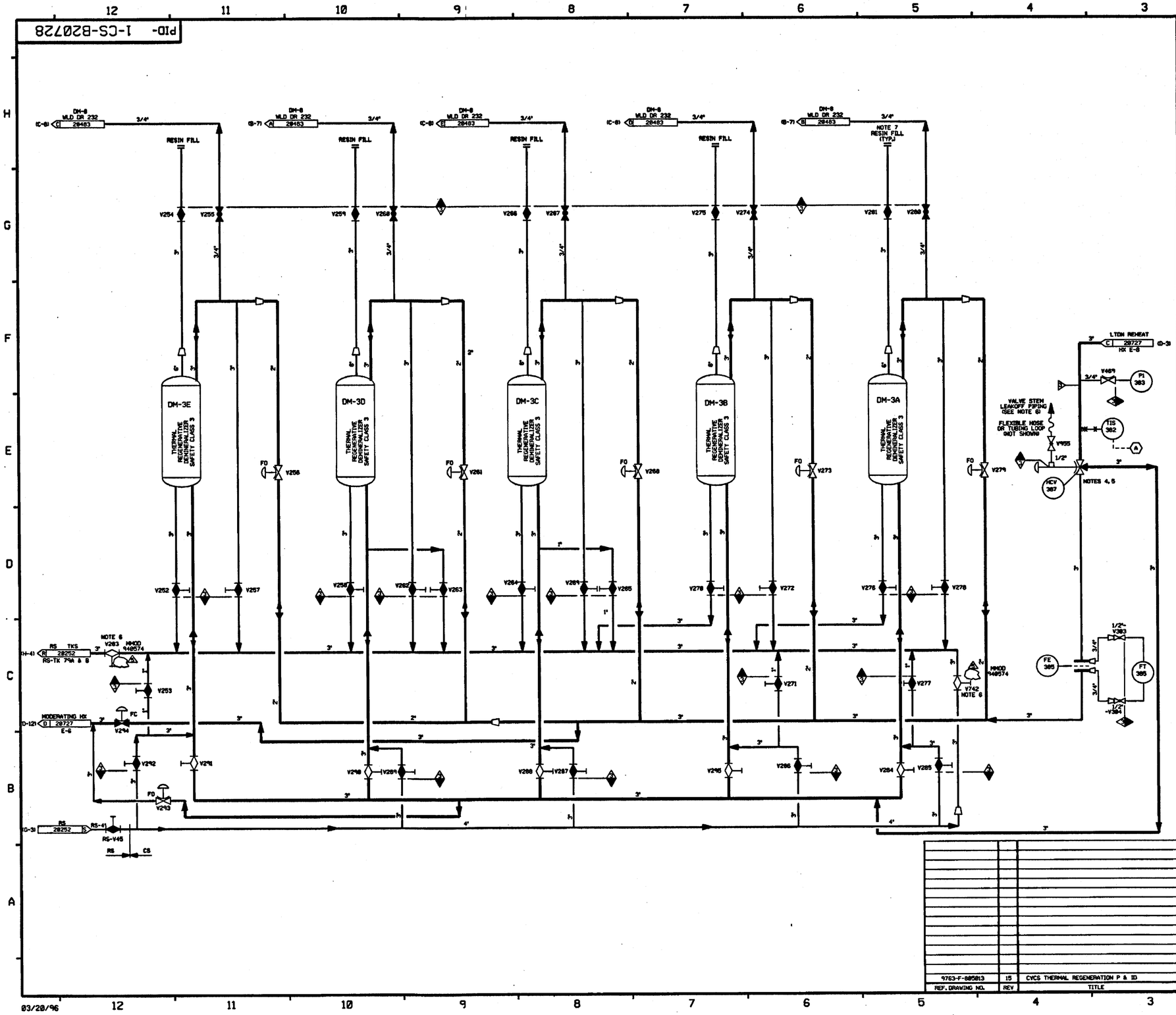

FOR P&ID REFERENCE DRAWINGS, SYMBOLS AND ABBREVIATIONS REFER TO DRAWINGS P&ID - LEGEND 1 AND P&ID - LEGEND 2

NOTES:

1) WORK THIS DWG WITH DWGS 20720, 20722 THRU 20727 & 20729.
2) ALL PIPING, VALVES, EQUIPMENT & INSTRUMENTS HAVE SYSTEM PREFIX "CS" UNLESS NOTED OTHERWISE.
3) MAIN FLOW IS SHOWN IN THE BORATION PHASE.
4) ALL VALVES ALIGNED FOR BORON REMOVAL (DILUTION).
5) FAILS TO BORON RELEASE POSITION (BORATION)
6) THESE VALVES TO BE CLOSED PRIOR TO ANY RESIN SLUICING OPERATIONS.
7) INSTALLED BLIND FLANGES WITHOUT GASKET.
8) REFER TO DRAWING VSL-20774 FOR VALVE LEAKOFFS.
9) INSTRUMENT REFERENCES:
(A) TO THERMOWELL TIS-129 ON DWG 20722

PORTIONS OF THIS DRAWING ARE

NUCLEAR SAFETY RELATED

REV	DATE	DSGN	DRWN	CHKD	CDE	SES	DESCRIPTION
5	3/20/96	BCS	—	DWS	MPW	RJF	INCORP MMOD 940574 CA#01
4	2/28/96	DWS	—	BCS	MPW	VWS	INCORP MMOD 940574 CA#0
3	4/13/95	MRB	—	BCL	DWS	JEV	INCORP. MMOD 91-515 CA0
2	8/21/87	GPM	HIW	BCL	WDS	RRC	REV'D NOTE 1, 8 & 9, REF DWG REV NO. ADDED P&ID REF DWG NOTE, CONT COORD'S & NOTES FOR VLV HCV 387 DELETED: REF DWG, NNS-1 CL BOUNDARY
1	8/22/86	BCL	TAK	WRD	VNK	PHH	ADDED CONTINUATION DETAILS, REVISED VALVE TYPE AND NOTE 8.
0	1/28/86	DWS	GJK	JDM	ASK	WFD	ISSUED FOR OPERATIONS

REF. DRAWING NO.	REV	TITLE
9763-F-805013	15	CVCS THERMAL REGENERATION P & ID

North Atlantic Energy Service Corporation

SEABROOK STATION

CHEMICAL VOLUME & CONTROL SYS
THERMAL REGENERATION
DETAIL

PID- 1-CS-B20728

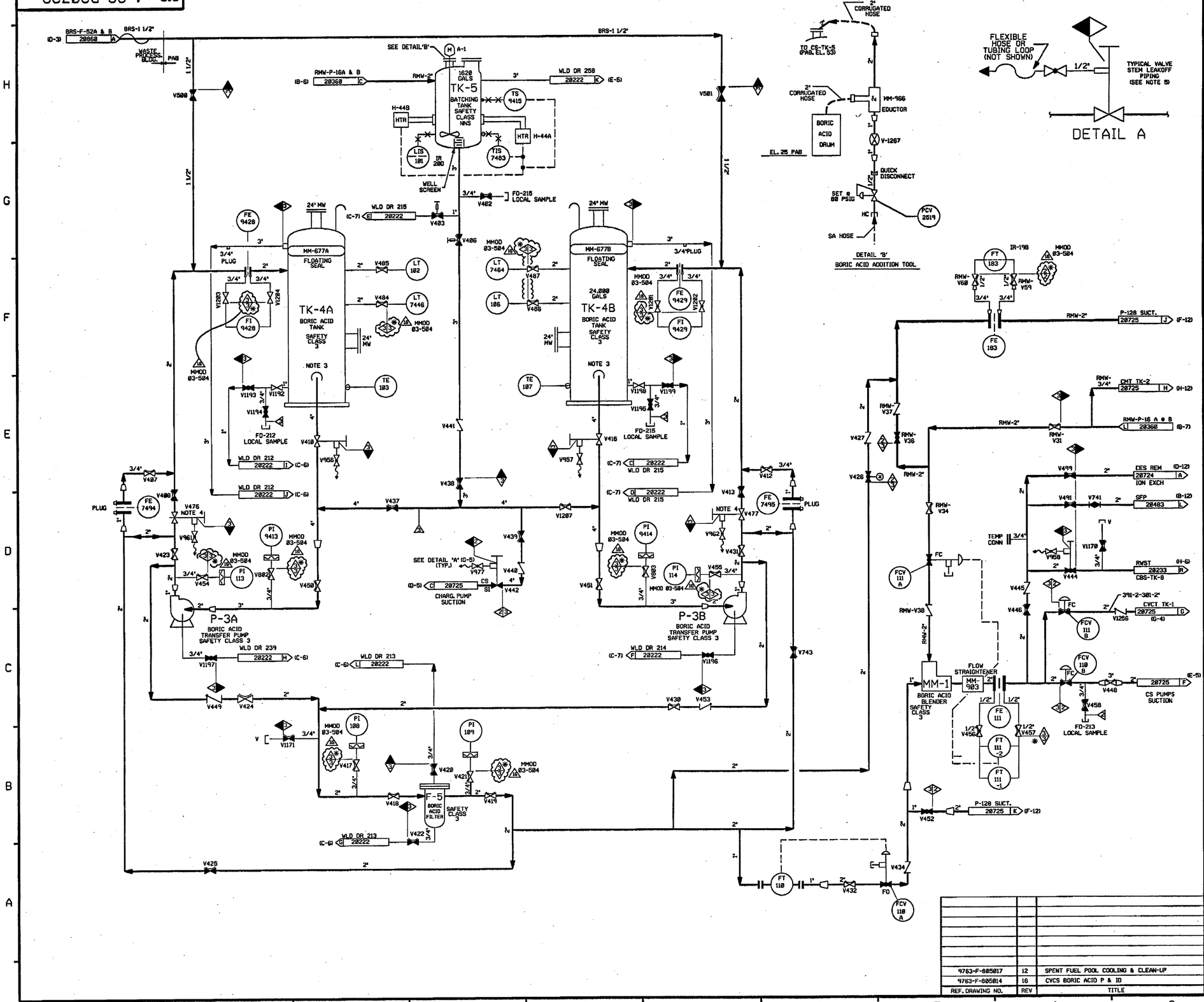

FOR P&ID REFERENCE DRAWINGS, SYMBOLS AND ABBREVIATIONS REFER TO DRAWINGS P&ID - LEGEND 1 AND P&ID - LEGEND 2

NOTES:

1. WORK THIS DWG WITH 20720 & 20722 THRU 20728.
2. ALL LINES, EQUIPMENT, COMPONENTS AND INSTRUMENTS HAVE SYSTEM PREFIX CS, UNLESS NOTED OTHERWISE.
3. ALL BORIC ACID & BATCHING TANK EQUIP & PIPING SHOWN IS LOCATED IN AREA MAINTAINED AT A CONTROLLED TEMPERATURE
4. VALVE IS LOCKED INTO POSITION DURING OPERATIONAL TESTING TO LIMIT PUMP RUNOUT TO 75 GPM WHEN TRANSFERRING BATCHING TANK CONTENTS TO BORIC ACID TANK.
5. REFER TO DWG VSL-20774 FOR VALVE LEAKOFFS.
6. DELETED

PORTIONS OF THIS DRAWING ARE

NUCLEAR SAFETY RELATED

REV	DATE	DSGN	CHKD	CE	DESCRIPTION
16	11-16-06	JM	BCS	RRB	INCORP MMOD 03-504 DCN 00
15	1/27/05	BCS	JM	RRB	INCORP. CR 05-00034 REV. 00
14	10/16/03	BCS	MPW	RRB	INCORP. DCR 02-013 DCN-00, 01, 02
13	8/27/03	BCS	JM	MR	INCORP. MMOD 03-515 DCN-00
12	5/12/03	JM	MPW	BCS	INCORP. CR 02-07592 REV 00
11	4/22/99	DWS	RWS	GRM	INCORP DCR 980052 DCN#00, DCR 980045 DCN#00 & REINCORPORATED DCR 950030 DCN#03
10	9/16/97	BCS	MPW	BAW	INCORP DCR 95-30 DCN 03
9	6/13/97	MPW	DWS	WNF	INCORP DCR 95-30 DCN 00
8	10/8/92	DWS	MRB	DMP	INCORP DCR 890073 CA#0 & 1
7	4/20/92	MRB	BCL	RRB	INCORP. MMOD 91-515 CA0
6	12/16/91	FCB	RMC	BCL	INCORP. MMOD 91-511 CA01
5	3/16/89	MRB	GPM	MJY	INCORPORATED DCR 88-142 CA0 REVISED: NOTE 2, V403 & V406 OPERATOR SYMBOL
4	12/15/87	GPM	DWS	PAG	REVISED NOTE 5, VALVE NO. ADDED FLGS. AT FT110, PLUGS AT 7494 & 7495, NOTE FOR V959, CONT COORD'S CLASS DESIGNATION, P&ID REF DWG NOTE & UE&C P&ID REF. DWG. DELETED: REF DWG, NNS-1 CL BOUNDARY, REDUNDANT SYS DWG. CONT.
3	10/6/86	JDM	MAP	RRC	INCORP ECA'S 08/118317A & 08/118448A
2	8/22/86	BCL	WRD	PHH	REVISED TO REFLECT AS-BUILT CONFIGURATIONS, ADDED HEAT TRACING & CONTINUATION REF. REVISED NOTE 5.
1	6/13/86	JDM	DWS	RRC	UPDATE REF DWG REV NO & REVISE ACCORDINGLY INCORP NCR 82/11790, REVISED RMW SUPPLY TO TK-5, INCORP ECA 99/112818A & ECA 19/8002028.
0	1/22/86	DWS	JDM	WFD	ISSUED FOR OPERATIONS

REF. DRAWING NO.	REV	TITLE
9763-F-805017	12	SPENT FUEL POOL COOLING & CLEAN-UP
9763-F-805014	16	CVCS BORIC ACID P & ID

FPL ENERGY Seabrook Station

CHEMICAL & VOLUME CONTROL SYS.
BORIC ACID
DETAIL

PID- 1-CS-B20729

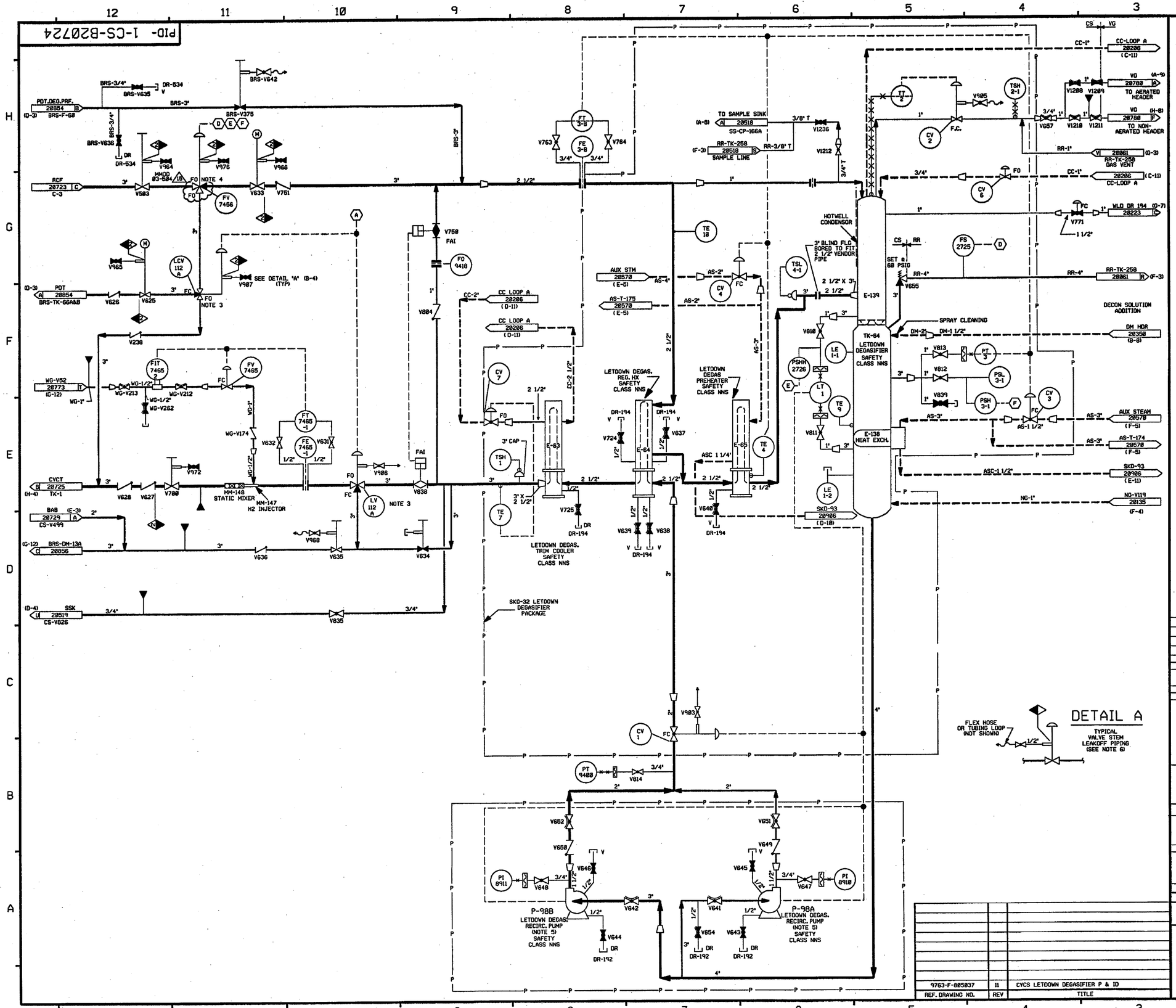

FOR P&ID REFERENCE DRAWINGS, SYMBOLS AND ABBREVIATIONS REFER TO DRAWINGS P&ID - LEGEND 1 AND P&ID - LEGEND 2

NOTES:

1. WORK THIS DWG WITH DWGS 20720, 20722, 20723, & 20725 THRU 20729.
2. ALL PIPING, VALVES, EQUIP & INSTRUMENTS HAVE SYSTEM PREFIX "CS", UNLESS NOTED OTHERWISE.
3. VALVE FAILS WITH FLOW TO CVCT
4. VALVE FAILS WITH FLOW TO LCV-112A
5. SEE DWG 28354 FOR WATER SUPPLY TO PUMP DOUBLE MECHANICAL SEALS.
6. REFER TO DWG VSL-20774 FOR VALVE LEAKOFFS.
7. INSTRUMENTATION REFERENCES
   - (A) CHEM VOL CONTROL TK (CS-TK-1) LEVEL LT-112E & LT-105 ON DWG CS-20725
   - (D)(E)(F) TO 1-CS-CV-3, 1-CS-CV-4 (AS-20578), 1-DM-V285 (DM-20350) AND 1-CS-FV-7456 (CS-20724).
8. △ INDICATES REVISION LEVEL

PORTIONS OF THIS DRAWING ARE

NUCLEAR SAFETY RELATED

REV	DATE	DSGN	CHKD	CE	DESCRIPTION
15	9-28-06	JM	[illegible]	[illegible]	INCORP MMOD 03-584 DCN 00
14	3/21/06	BCS	JM	RRB	INCORP MSE 05-168, REV. 00
13	2/27/01	BCS	MRB	RCP	INCORP MMOD 98-641 DCN-00
12	4/23/99	DWS	BCS	GRM	INCORP DCR 980045 DCN#04
11	3/3/93	BCL	MRB	DJM	INCORP DCR 880179 CA#16
10	11/02/92	DWS	MRB	DJM	INCORP DCR 880179 CA#8
9	10/26/92	DWS	BCL	WFZ	INCORP DCR 890081 CA#8, CHANGE SYS PREFIX ON CS-V22 TO WG-V52 PER WG-20773.
8	4/13/92	MRB	BCL	JEV	INCORP. MMOD 91-515 CA8
7	12/28/89	MRB	PAL	ES	INCORP. DCR 86-113 CA 1
6	6/30/88	GPM	APL	PAS	REVISED VALVE SYMBOL V648, 638, 639, 725, 637, 724, 654, 641, 642, 651 & 652 PER CP 53872, ADDED LINE SIZE & RESTRICTING ORIFICE AND FLANGES TO INLET HOTWELL CONDENSOR PER 53758, FLANGES TO CLARIFY LINE SIZE BOUNDARY FOR INLET TO E-139 FROM E65, FAI DESIGNATION FOR V750 AND V838, PER NMP DWG 586244 DELETED, FAI DESIGNATION FOR V633 AND V633 PER NMP DWGS 586274 AND 586277, LC DESIGNATION FOR V635 PER LEAC DWG 885037.
5	12/15/87	GPM	DWS	PAS	REVISED EQUIP. CL. PER UE&C P&ID. REMOVED DUPLICATED PIPING, REV'D NOTE 6, DELETED FLEX HOSE & DESIGNATED VALVES AS CLOSED FOR CS-V987, 964, 965, 966, 976 & 972 PER NCR 86/145A, ADDED NOTE FOR CS-V987 & CAPILLARY SYMBOL.
4	1/23/87	JDM	WRD	RRC	INCORP DCR 618, REVISED VALVE TYPE PER FP.
3	10/16/86	JDM	WRD	RRC	INCORP NCR 95/116A & 93/113027A & ECA 19/105527C ADDED CON REFS NOTE 6, REMOVED DUPLICATED PIPING SHOWN ON NG PID, ADDED SYSTEM PREFIX TO CV-4, CV-5, CORRECTED VALVE TYPES PER LE&C P&ID
2	8/22/86	MPM	WRD	PHH	REVISED CONTINUATIONS
1	6/16/86	DWS	DWS	RRC	DESIGN CHGS RESOLVED PER F-805037-R11 & 2, RESOLVED PER ECA 19/104469A, REMOVED CS-SKD-93, DM-V285, DM-VENTV234 & DM DRN (V382) FROM DWG, ADDED BRS, AS, ASC CONT, INCORP ECA 85/105128 & ECA 19/105126C.
0	1/22/86	DWS	JDM	WFD	ISSUED FOR OPERATION, ECA 19/104469A

REF. DRAWING NO.	REV	TITLE
9763-F-805037	11	CVCS LETDOWN DEGASIFIER P & ID

FPL ENERGY Seabrook Station

CHEMICAL & VOLUME CONTROL SYS.
LETDOWN DEGASIFIER
DETAIL

PID- 1-CS-B20724

09/28/06

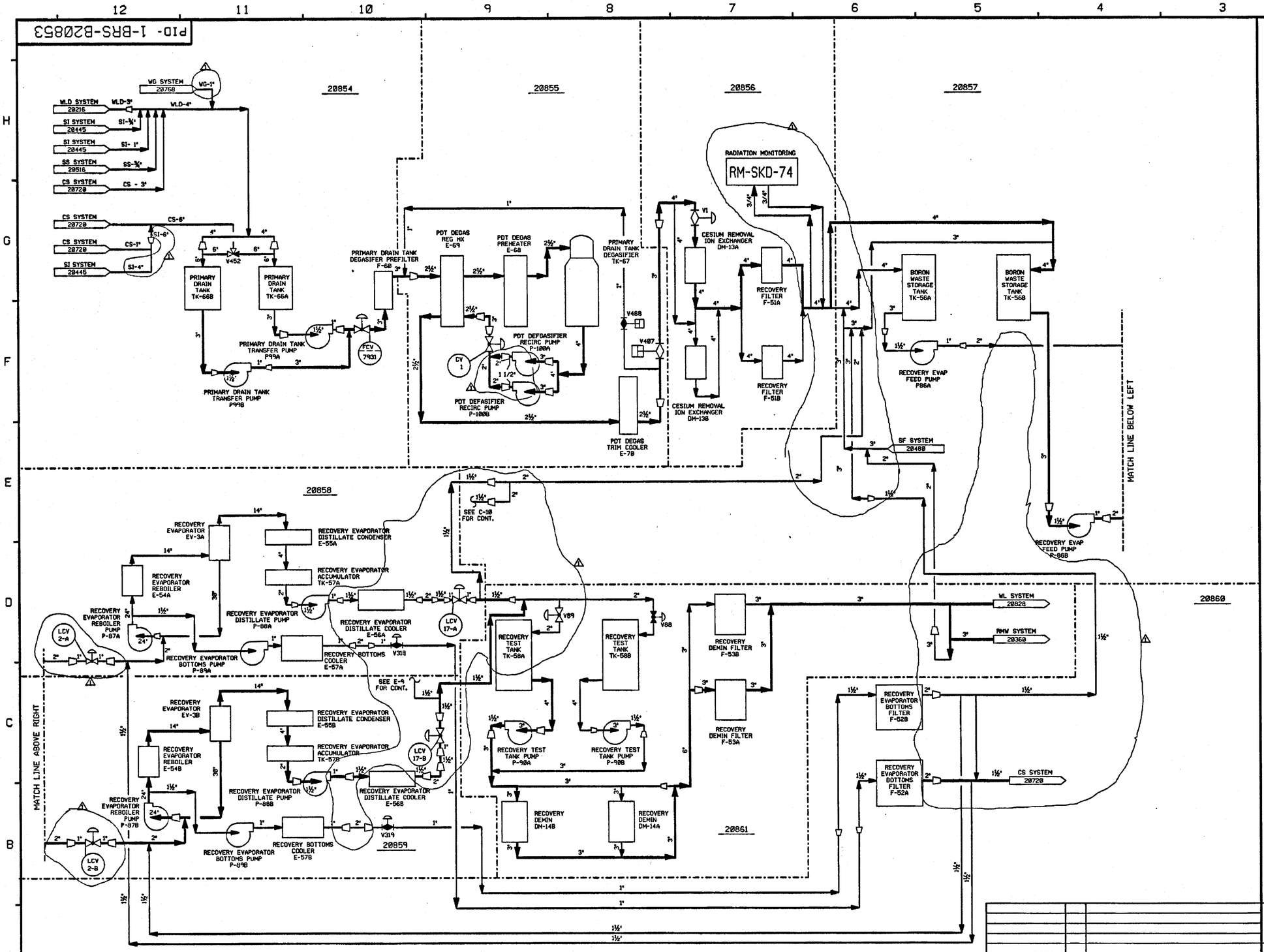

NOTES:

1. ALL LINES, EQUIPMENT, COMPONENTS AND INSTRUMENTS HAVE SYSTEM PREFIX "BRS" UNLESS NOTED OTHERWISE.
2. WORK THIS DWG WITH DWG'S 20854, 20855, 20856, 20857, 20858, 20859, 20860 & 20861
3. △ INDICATES REVISION LEVEL.

REF. DRAWING NO.	REV	TITLE
9763-F-805614	10	BORON RECOVERY SYSTEM FILTRATION & STORAGE
9763-F-805615	11	BORON RECOVERY SYSTEM EVAPORATOR EV-3A P&ID
9763-F-805616	9	BORON RECOVERY SYSTEM EVAPORATOR EV-3B P&ID
9763-F-805618	10	BORON RECOVERY SYSTEM PRIMARY DRAIN TANK
9763-F-805623	6	BORON RECOVERY SYSTEM EVAPORATOR BOTTOM
9763-F-805624	8	BORON RECOVERY SYS TESTING & DEMINERALIZATION
9763-F-805626	11	BORON RECOVERY SYSTEM-PRIMARY DRAIN TANKS P&ID

REV	DATE	DSGN	DRWN	CHKD	CE	LDE	DESCRIPTION
1	1/27/87	MPW	DPD	WRD	BCL	VJS	ADDED NOTE 3. REVISED PER LATEST SYSTEM DRAWINGS
0	7/13/86	GD	SKN	JDM	ASK	WFD	ISSUED FOR OPERATIONS

PSNH PUBLIC SERVICE OF NEW HAMPSHIRE

SEABROOK STATION

BORON RECOVERY SYSTEM OVERVIEW

PID- 1-BRS-B20853

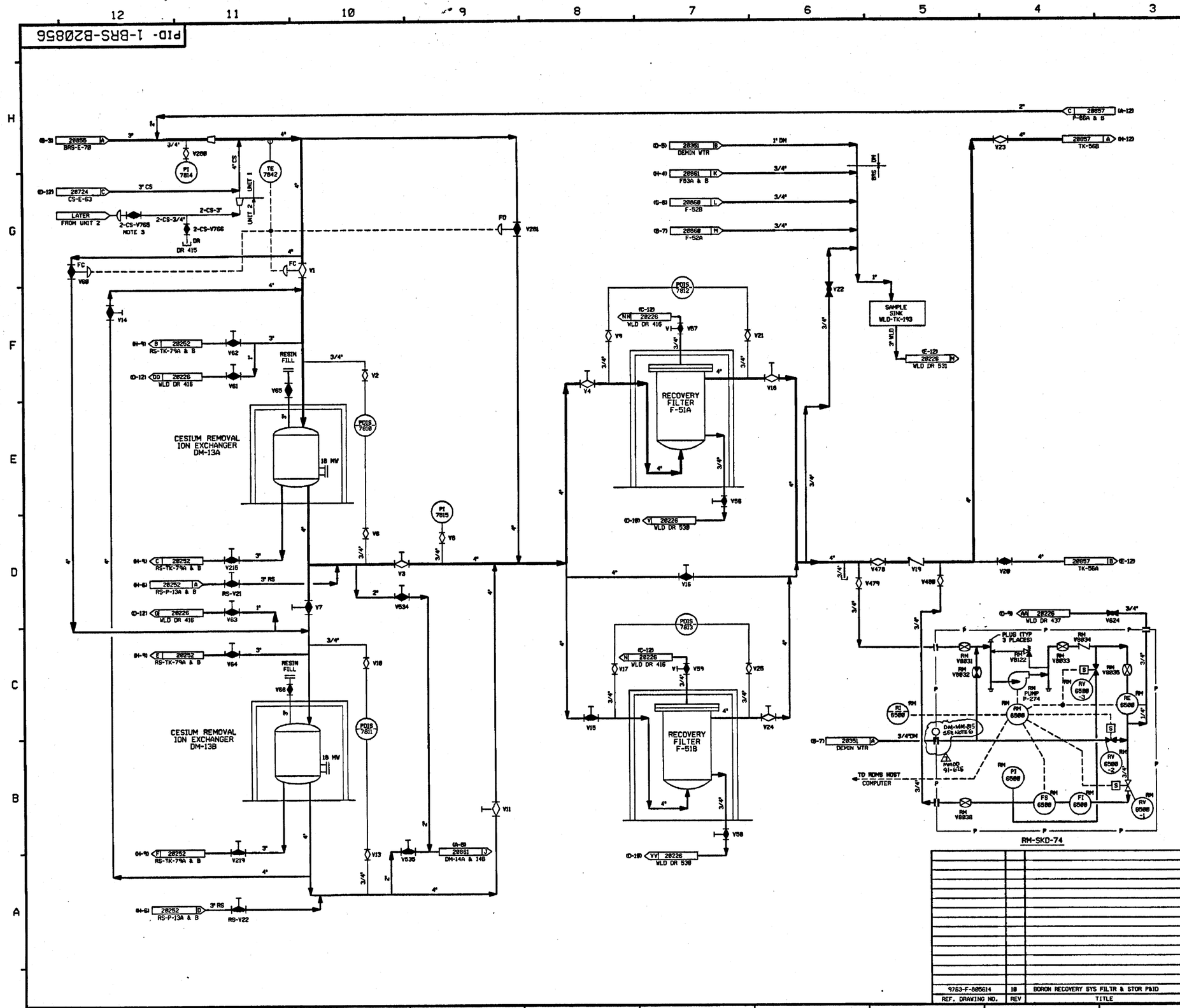

FOR P&ID REFERENCE DRAWINGS, SYMBOLS AND ABBREVIATIONS REFER TO DRAWINGS P&ID - LEGEND 1 AND P&ID - LEGEND 2

NOTES:

1. ALL LINES, EQUIPMENT, COMPONENTS AND INSTRUMENTS HAVE SYSTEM PREFIX "BRS" UNLESS NOTED OTHERWISE.
2. WORK THIS DWG WITH DWG'S 20853, 20854, 20855, 20857, 20858, 20859, 20860 & 20861
3. VALVE IS CLOSED DURING UNIT 2 CONSTRUCTION
4. △ INDICATES REVISION LEVEL
5. ALL LINES, EQUIPMENT, COMPONENTS AND INSTR. ARE SAFETY CLASS NNS UNLESS NOTED OTHERWISE.
6. SPECTACLE FLANGE SHOWN IN NORMAL POSITION REVERSED ONLY DURING PURGING OPERATIONS (MMOD 91-625)

REV	DATE	DSGN	DRWN	CHKD	CE	LDE	DESCRIPTION
7	10/8/91	MRB	FCB	JM	APL	ES	INCORP. MMOD 91-625 CA0
6	9/18/91	GPM	FCB	JM	MRB	MAC	INCORP. DCR 90-14 CA01
5	2/28/91	MRB	FCB	RMC	APL	BCL	INCORP. MMOD 90-648 CA01
4	10/29/90	MRB	FCB	JM	APL	BCL	INCORP MMOD 90-601 CA00 ADDED: NOTE 5 FOR INFORMATION
3	12/12/88	MPW	DWS	PAL	BCL	RRC	ADDED CONT REF LOC'S, VALVE RM V8122 PER FP-71282 AND NOTE 4.
2	9/26/86	MAP	DWS	JDM	BCL	RRC	ADDED VALVING & INSTRUMENT INFO FOR RM-SKD-74 PER FP-71280. REVISED DWG CONTINUATION. DELETED REF DWGS N/A.
1	6/23/86	GD	SKN	DWS	JMS	RRC	INCORP. ECA 19/116012A & 99/80600B, CHANGE ITEM #1 RESOLVED PER ECA 19/802819A
0	1/13/86	GD	SKN	JDM	ASF	WFD	ISSUED FOR OPERATIONS

PSNH PUBLIC SERVICE OF NEW HAMPSHIRE

SEABROOK STATION

BORON RECOVERY SYSTEM FILTRATION DETAIL

PID- 1-BRS-B20856

REF. DRAWING NO.	REV	TITLE
9763-F-805614	10	BORON RECOVERY SYS FILTR & STOR P&ID

PID- 1-BRS-B20857

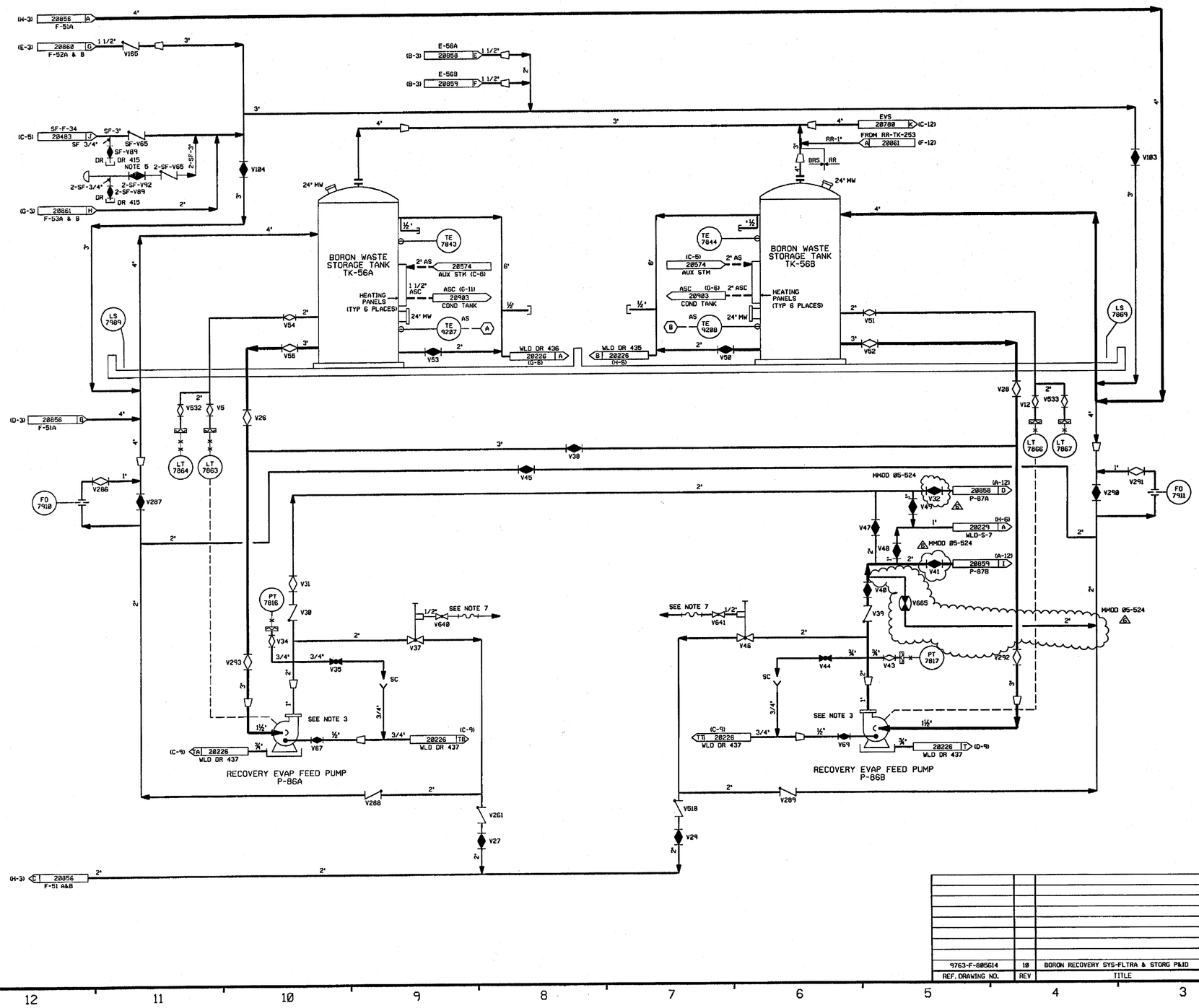

FOR P&ID REFERENCE DRAWINGS, SYMBOLS AND ABBREVIATIONS REFER TO DRAWINGS P&ID - LEGEND 1 AND P&ID - LEGEND 2

NOTES:

1. ALL LINES, EQUIPMENT, COMPONENTS AND INSTRUMENTS HAVE SYSTEM PREFIX "BRS" UNLESS NOTED OTHERWISE.
2. WORK THIS DWG WITH DWG'S 20853, 20854, 20855, 20856, 20858, 20859, 20860 & 20861.
3. SEE DRAWING DM-20353 FOR WATER SUPPLY TO PUMP DOUBLE MECHANICAL SEALS.
4. INSTRUMENT REFERENCES:
   - (A) TO TV-9287 ON DWG AS-20574 (D-11)
   - (B) TO TV-9288 ON DWG AS-20574 (E-10)
5. VALVE IS CLOSED DURING UNIT 2 CONSTRUCTION
6. △ INDICATES REVISION LEVEL.
7. REFER TO DRAWING VSL-20774 FOR VALVE LEAKOFFS.
8. ALL LINES, EQUIPMENT, COMPONENTS AND INSTRUMENTS ARE SAFETY CLASS NNS, UNLESS NOTED OTHERWISE.

REV	DATE	DSGN	CHKD	CE	DESCRIPTION
6	6/13/06	BCS	JMA	DJM	INCORP. MMOD 05-524 DCN-00, 03
5	11/7/92	MRB	BCL	DJM	INCORP. DCR 87-84 CA0 REVISED: NOTE 4, VALVE SYMBOL PER NOTE 5. ADDED: FLOW ARROWS, NOTE 8, DWG LOC COORD'S. DELETED: NNS-1 SYMBOL.
4	5/28/92	MRB	MPW	DWS	INCORP. MMOD 91-511 CA0
3	6/18/87	GPM	BCL	VWS	REVISED: TO CLARIFY DUPLICATION OF ASSOC. SYS. REF LETTER FOR CONT. DWG'S; ADDED: NOTE 7; CONT. COORD'S DELETED: REF DWG'S.
2	9/12/86	MPW	BCL	RRC	ADDED CONTINUATIONS & REV LOCATION OF PT-7816,7817,LT-7863,7864,7866 & 7867 PER ERECTION ISO'S 7914 WALKDOWN
1	6/17/86	GD	JMCS	RRC	RESOLVED CMC ITEMS 1 & 2 PER REF DWG 885614-REV 18, INCORP. ECA 19/35898 & ECA 19/118248, REV VALVE TAG
0	1/13/86	GD	ASK	WFD	ISSUED FOR OPERATIONS

REF. DRAWING NO.	REV	TITLE
9763-F-885614	18	BORON RECOVERY SYS-FLTRA & STORG P&ID

FPL ENERGY Seabrook Station

BORON RECOVERY SYSTEM
STORAGE
DETAIL

PID- 1-BRS-B20857

06/13/06

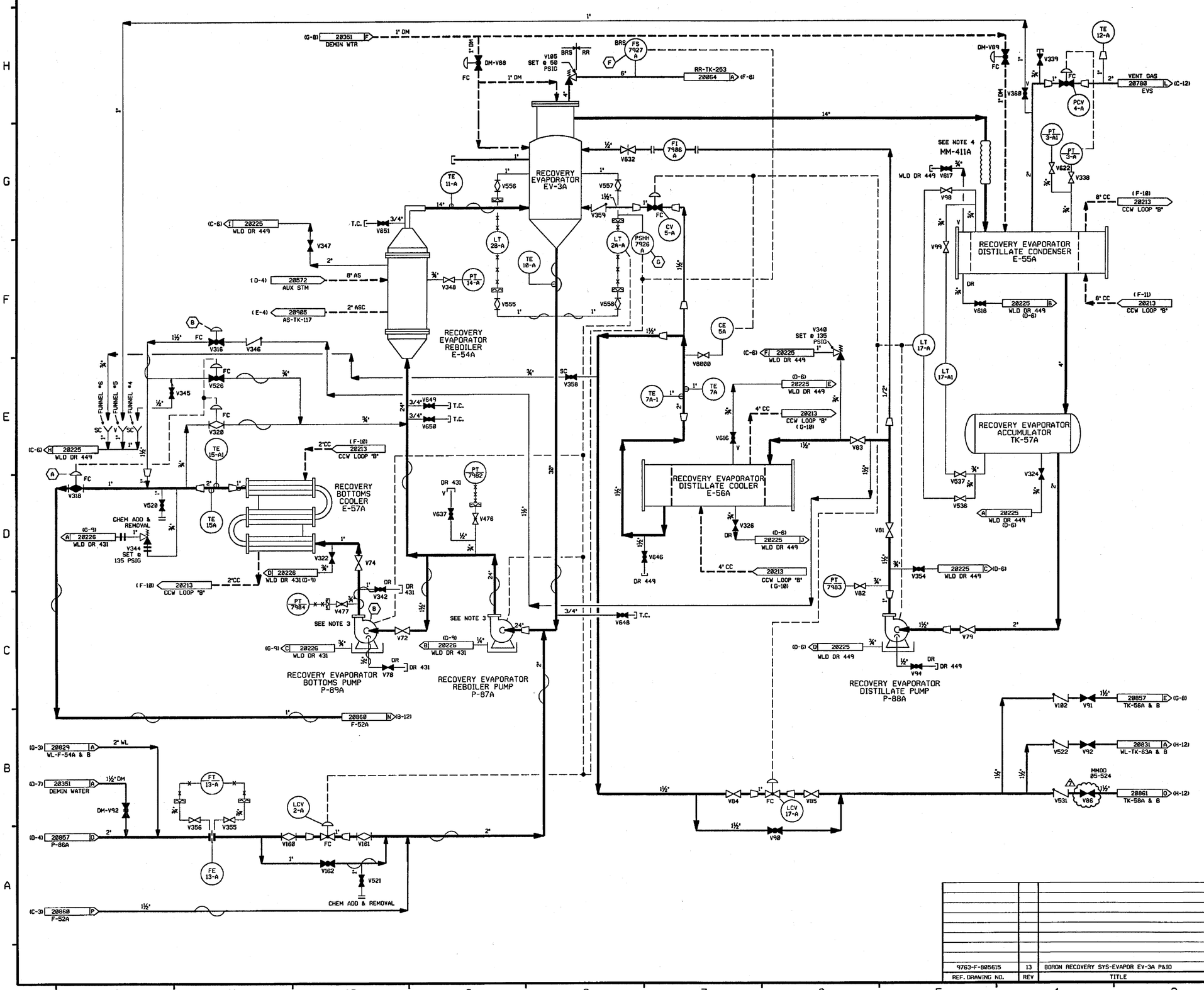

FOR P&ID REFERENCE DRAWINGS, SYMBOLS AND ABBREVIATIONS REFER TO DRAWINGS P&ID-LEGEND 1 AND P&ID-LEGEND 2.

NOTES:

1) ALL LINES, EQUIPMENT, COMPONENTS AND INSTRUMENTS HAVE SYSTEM PREFIX "BRS" UNLESS NOTED OTHERWISE.
2) WORK THIS DWG WITH DWG'S 20853, 20854, 20855, 20856, 20857, 20859, 20860 & 20861.
3) SEE DWG DM-20353 FOR WATER SUPPLY TO PUMP DOUBLE MECHANICAL SEALS.
4) ENTIRE LINE IS FLEX CONN.
5) INSTRUMENT REFERENCES:
   - (A) HIGH E-57A OUTLET TEMP, HIGH WS-TK-76 LEVEL AND LOW EV-38 LEVEL WS-TK-76 TRANSFER VALVE INTERLOCK.
   - (B) BRS-P-89A, DISTILLATE FLUSH V316 INTERLOCK.
   - (F) TO 1-DM-V88 ON DWG DM-20351 (H-7) & 1-BRS-FCV-1A ON DWG AS-20572 (D-6).
   - (G) TO 1-DM-V88 ON DWG DM-20351 (H-7) & 1-BRS-FCV-1A ON DWG AS-20572 (D-6).
6) △ INDICATES REVISION LEVEL
7) ALL LINES, EQUIPMENT COMPONENTS AND INSTRUMENTS ARE SAFETY CLASS NNS UNLESS NOTED OTHERWISE.

REV	DATE	DSGN	CHKD	CE	DESCRIPTION
7	6/13/06	BCS	JM	DJM	INCORP MMOD 05-524 DCN-03
6	12/7/92	MRB	DWS	DJM	INCORP DCR 87-84 CA 28
5	11/7/92	MRB	BCL	DJM	INCORP DCR 87-84 CA0
4	12/18/91	MRB	JM	GRM	INCORP: DCR 86-634 CA0 REVISED: VALVE POSITION PER NHY PID DM-20351 ADDED: LINE SIZE FOR CLARITY DELETED: REDUNDANT INTERFACE INFO. & VALVE DIAPHRAGM SYMBOL PER UE&C PID 9763-F-805615
3	9/16/87	JDM	BCL	RRC	INCORP DCR 86-597, CORRECTED DRAFTING ERRORS. REVISED NOTE 7.
2	10/3/86	MRJ	BCL	RRC	RE-INCORP. ECA 00/116967A, ADDED V0000 CONTINUATION FLAG REF'S & NOTE 6. REVISED TUBING SYMBOL FOR PT-7982 PER UE&C P&ID AND CONTINUATION FLAG REF. ADDED P&ID LEGEND NOTE.
1	6/24/86	JDM	JNK	RRC	INCORP. ECA 00/116967A & 19/116983C ADDED REDUCER & FLAGS. CHANGE ITEM ◇ RESOLVED PER LATEST UE&C P&ID
0	1/13/86	GD	JDM	WFD	ISSUED FOR OPERATIONS

REF. DRAWING NO.	REV	TITLE
9763-F-805615	13	BORON RECOVERY SYS-EVAPOR EV-3A P&ID

FPL ENERGY Seabrook Station

BORON RECOVERY SYSTEM
EVAPORATION
DETAIL

PID- 1-BRS-B20858

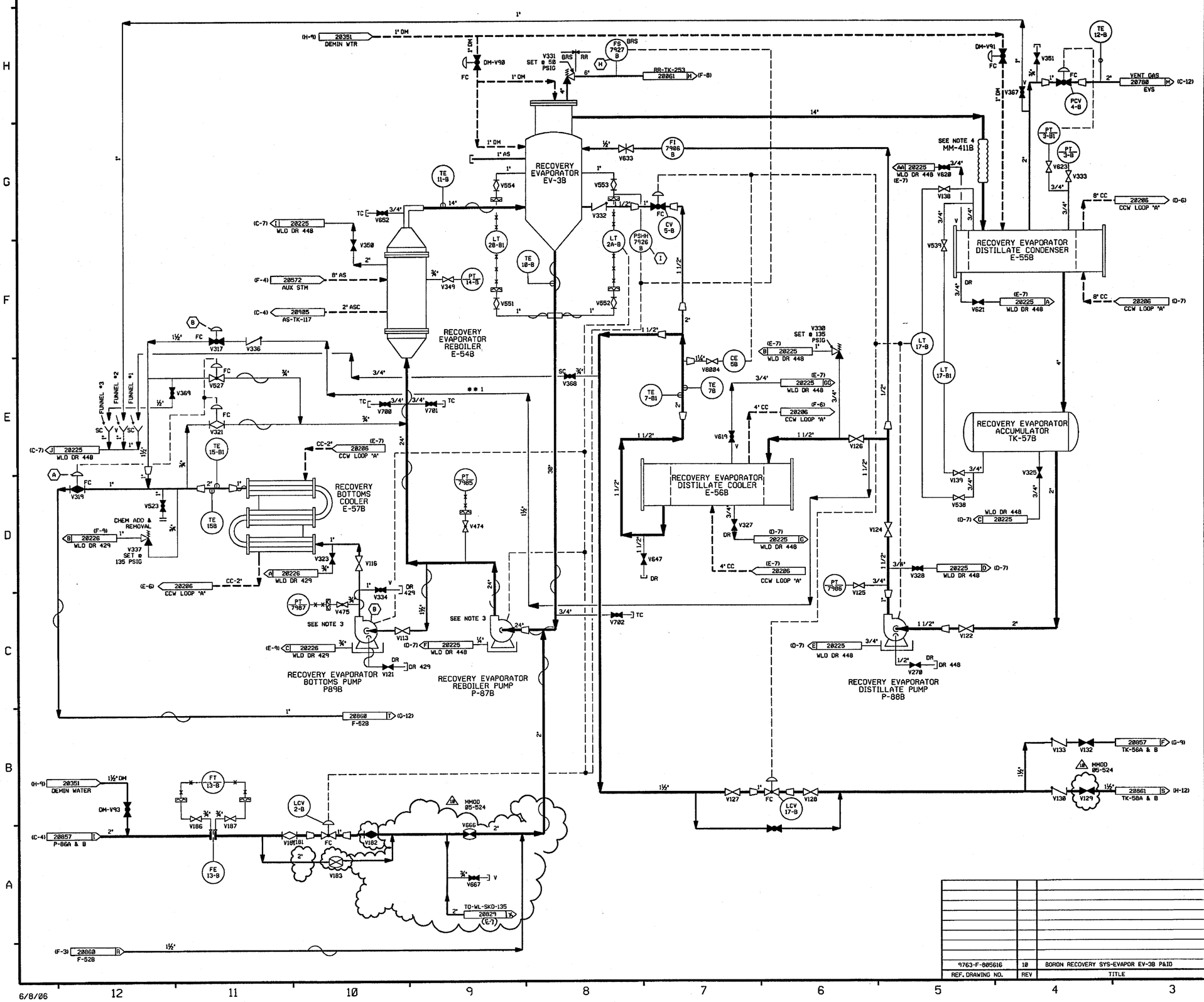

PID- 1-BRS-B20859

FOR P&ID REFERENCE DRAWINGS, SYMBOLS AND ABBREVIATIONS REFER TO DRAWINGS P&ID - LEGEND 1 AND P&ID - LEGEND 2

NOTES:

1) ALL LINES, EQUIPMENT, COMPONENTS AND INSTRUMENTS HAVE SYSTEM PREFIX "BRS" UNLESS NOTED OTHERWISE.

2) WORK THIS DWG WITH DWG'S 20853, 20854, 20855, 20856, 20857, 20858, 20860 & 20861.

3) SEE DWG DM-20353 FOR WATER SUPPLY TO PUMP DOUBLE MECHANICAL SEALS.

4) ENTIRE LINE IS FLEX CONN.

5) INSTRUMENT REFERENCES:

(A) HIGH E-57B OUTLET TEMP, HIGH WS-TK-7B LEVEL AND LOW EV-3B LEVEL WS-TK-7B TRANSFER VALVE INTERLOCK.

(B) BRS-P-89B, DISTILLATE FLUSH V317 INTERLOCK.

(H) TO 1-DM-V90 ON DWG DM-20351 (H-9) & 1-BRS-FCV-1B ON DWG AS-20572 (G-6).

(I) TO 1-DM-V90 ON DWG DM-20351 (H-9) & 1-BRS-FCV-1B ON DWG AS-20572 (G-6).

6) △ INDICATES REVISION LEVEL

7) DELETED

8) ALL LINES, EQUIPMENT, COMPONENTS AND INSTRUMENTS ARE SAFETY CLASS NNS, UNLESS NOTED OTHERWISE.

REV	DATE	DSGN	CHKD	CE	DESCRIPTION
10	6/8/06	BCS	JM	DJM	INCORP. MMOD 05-524 DCN 00, 03
9	8/18/97	MPW	BCS	VWS	INCORP. MMOD 96-550 DCN 01
8	12/7/92	MRB	DWS	DJM	INCORP. DCR 87-84 CA 28
7	11/7/92	MRB	BCL	DJM	INCORP. DCR 87-84 CA0
6	12/18/91	MRB	JM	GRM	INCORP. DCR 86-634 CA0
5	5/25/88	GPM	APL	DJM	INCORP. DCR 88-003 REVISED: PIPING TO CLARIFY DUPLICATION OF ASSOCIATED SYSTEMS, NOTE 8. ADDED: HEAT TRACE SYMBOL PER LINE LIST, LINE SIZE PER UE & C ISO F-411852 DELETED: CHANGE ITEM 1 PER DCR 88-003.
4	9/16/87	JDM	BCL	RRC	INCORP DCR 86-587, ADDED V-8884 PER EXISTING FIELD CONFIG. DELETED NOTE 7, CORRECTED DRAFTING ERRORS, REVISED TO CLARIFY DUPLICATION OF ASSOCIATED SYSTEMS. ADDED: NOTE 8 PER 805616, CHG. ITEM 1
3	2/18/87	JDM	WRD	VWS	APPROVED CHANGE ITEM #1 PER COMPLETION OF WR#86W010018.
2	12/22/86	FJR	WRD	RRC	INCORP. ECA 19/802818A, ADDED & REV'D CONT. FLAG COORD'S. CORRECTED DRAFTING ERRORS PER UE&C P&ID. REV. REF. DWG. LIST. ADDED & REV. CONT. FLAG REF. DWGS. ADDED NOTES 6 & 7.
1	6/26/86	GD	BCL	RRC	INCORP. ECA 19/816888A, ECA 88/882817C & ECA 19/114273A. CHANGE ITEM 1 RESOLVED PER LATEST UE&C P&ID. CHANGE ITEM 2 RESOLVED PER ECA 19/801285A.
0	1/13/86	GD	JDM	WFD	ISSUED FOR OPERATIONS

REF. DRAWING NO.	REV	TITLE
9763-F-805616	10	BORON RECOVERY SYS-EVAPOR EV-3B P&ID

FPL ENERGY Seabrook Station

BORON RECOVERY SYSTEM
EVAPORATION
DETAIL

PID- 1-BRS-B20859

6/8/06

PID- 1-BRS-B20860

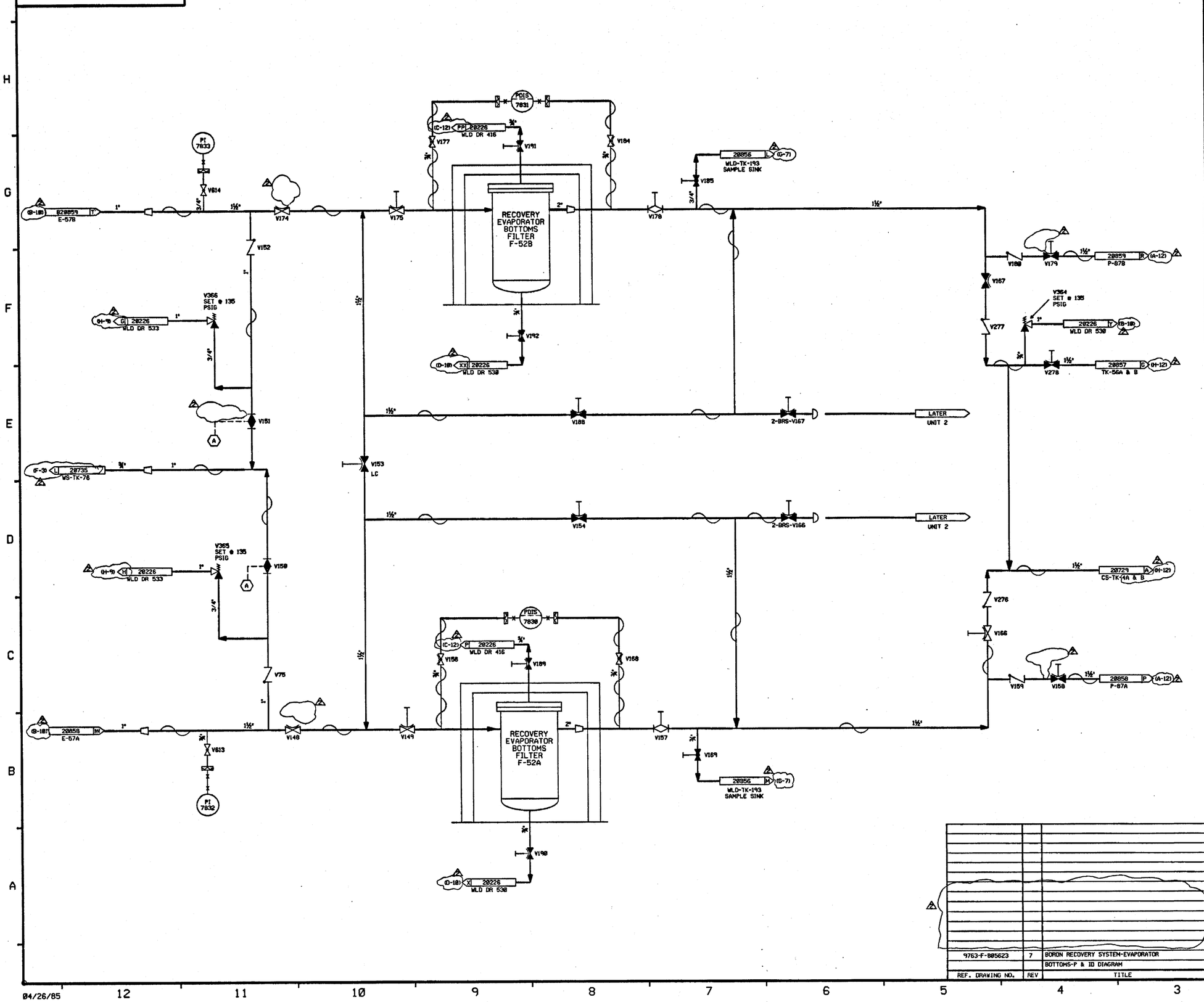

FOR PAID REFERENCE DRAWINGS, SYMBOLS AND ABBREVIATIONS REFER TO DRAWINGS PAID LEGEND 1 & LEGEND 2.

INCOMPLETE ITEMS	
ITEM	NUMBER

NOTES:

1) ALL LINES, EQUIPMENT, COMPONENTS AND INSTRUMENTS HAVE SYSTEM PREFIX "BRS" UNLESS NOTED OTHERWISE.
2) WORK THIS DWG WITH DWG'S 20853, 20854, 20855, 20856, 20857, 20858, 20859 & 20861.
3) VALVE AND EQUIPMENT NUMBERS PRECEDE BY A "2" ARE FOR UNIT 2.
4) INSTRUMENT SYMBOLS:
   (A) INTERLOCK WITH EVAPORATOR CONCENTRATES DISCHARGE VALVES.
5) △ INDICATES REVISION NUMBER

REF. DRAWING NO.	REV	TITLE
9763-F-805623	7	BORON RECOVERY SYSTEM-EVAPORATOR BOTTOMS-P & ID DIAGRAM

REV	DATE	DSGN	DRWN	CHKD	CE	LDE	DESCRIPTION
							ADDED DWG COOR FO ALL CONT FLAGS, CS-TK-14A TO CONT FLAG FOR DWG 20729, 3 LETTER IDENTIFIERS FOR CONT FLAGS, NOTE 5 & SYMBOLS & ABBREV
2	4/26/86	CSB	DWS	MM	BCL	RRC	REF DWGS NOTE, DELETED 7 REF DWGS & PIPE CLASSES, REVISED IDENT LETTERS FROM P TO PP & X TO XX FOR FILTER F-52B & CONT DWG FROM 20732 TO 20735.
1	8/17/86	GD	GJS		BCL	JHCS	RRC	INCORP ECA 19/1159644
0	1/13/86	GD	SKN		JDM	ASK	WFD	ISSUED FOR OPERATIONS

PSNH PUBLIC SERVICE OF NEW HAMPSHIRE

SEABROOK STATION

BORON RECOVERY SYSTEM EVAPORATION DETAIL

PID- 1-BRS-B20860

04/26/85

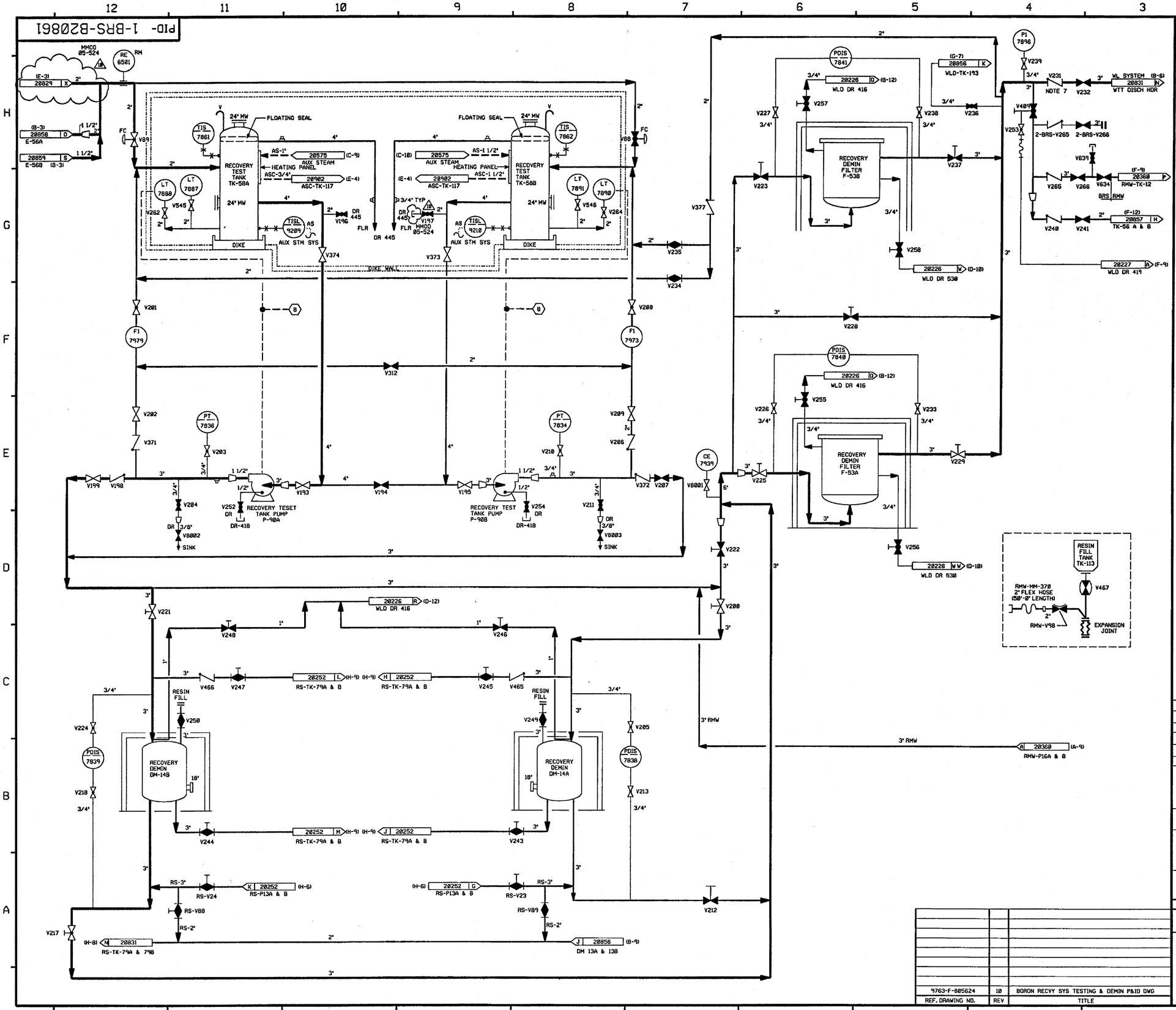

FOR P&ID REFERENCE DRAWINGS, SYMBOLS AND ABBREVIATIONS REFER TO DRAWINGS P&ID - LEGEND 1 AND P&ID - LEGEND 2

NOTES:

1. ALL LINES EQUIPMENT, COMPONENTS AND INSTRUMENTS HAVE SYSTEM PREFIX "BRS" UNLESS OTHERWISE NOTED.
2. WORK THIS DWG WITH DWGS 20853,20854, 20855, 20856, 20857, 20858, 20859 & 20860.
3. VALVE & EQUIPMENT NUMBERS PRECEDED BY A "2" ARE FOR UNIT 2.
4. △ INDICATES REVISION LEVEL
5. ALL LINES, EQUIPMENT, COMPONENTS AND INSTRUMENTS ARE SAFETY CLASS NNS UNLESS OTHERWISE NOTED.
6. INSTRUMENT REFERENCES
   (B) TO WL-FCV-1458-1 & 2, DRAWING WL-20831
7. INTERNALS OF CHECK VALVE BRS-V231 HAVE BEEN REMOVED.

REV	DATE	DSGN	CHKD	CE	DESCRIPTION
10	6/13/06	BCS	JWL	DJM	INCORP. MMOD 05-524 DCN-00, 02
9	9/25/03	BCS	JM	JET	INCORPORATED MSE 03-133 REV. 00
8	11/17/98	BCS	MPW	JCM	INCORPORATED DCR 98-029 DCN-01
7	10/21/98	BCS	DWS	DJM	INCORPORATED DCR 98-029 DCN-00
6	7/24/94	BCL	MPW	VWS	INCORPORATED MMOD 95-506 CA-0
5	3/28/89	MRB	PAL	MJY	INCORPORATED DCR 86-185 CA 3
4	5/25/88	GPM	APL	DJM	INCORP DCR 88-003 REVISED: INLETS TO DM-14A & B PER UE & C ISO. V8002, 3 SYMBOL PER AS BUILT CONDITION. PIPING TO CLARIFY ASSOCIATED SYSTEMS ADDED: NOTE 5 PER UE & C P & ID 805624, DWG CONT LETTERS.
3	1/7/87	MRJ	WRD	RRC	RESOLVED CHANGE ITEM 1 PER AS-BUILT COND., CORRECTED INCORP. OF ECA 19/115964B, DELETED NOTE 5.
2	10/17/86	CSB	MAP	RRC	INCORP ECA'S 93/117127A & 19/115964B. ADDED DWG FOOR TO CONT FLAGS. DIKE WALL BOUNDARY. REF DWG NOTE 3. NOTE FOR DWG REV LEVEL. CHANGED V277 TO V227. REVISED P-98A & B DISCH HDR DRAIN VALVE & PIPING FOR DEMIN TKS DM-TK-14A & B.
1	6/18/86	DWS	DWS	RRC	CORRECTED V194 TO GATE, REVISED CONTINUATION. RESOLVED CHNG. ITEM NO.1 INC. 805624 REV. 10
0	1/13/86	GD	JDM	WFD	INCORPORATE ECA 85/188832 ISSUED FOR OPERATIONS

REF. DRAWING NO.	REV	TITLE
9763-F-805624	10	BORON RECVY SYS TESTING & DEMIN P&ID DWG

FPL ENERGY Seabrook Station

BORON RECOVERY SYSTEM TESTING & DEMINERALIZATION DETAIL

PID- 1-BRS-B20861

PID- 1-BRS-B20854

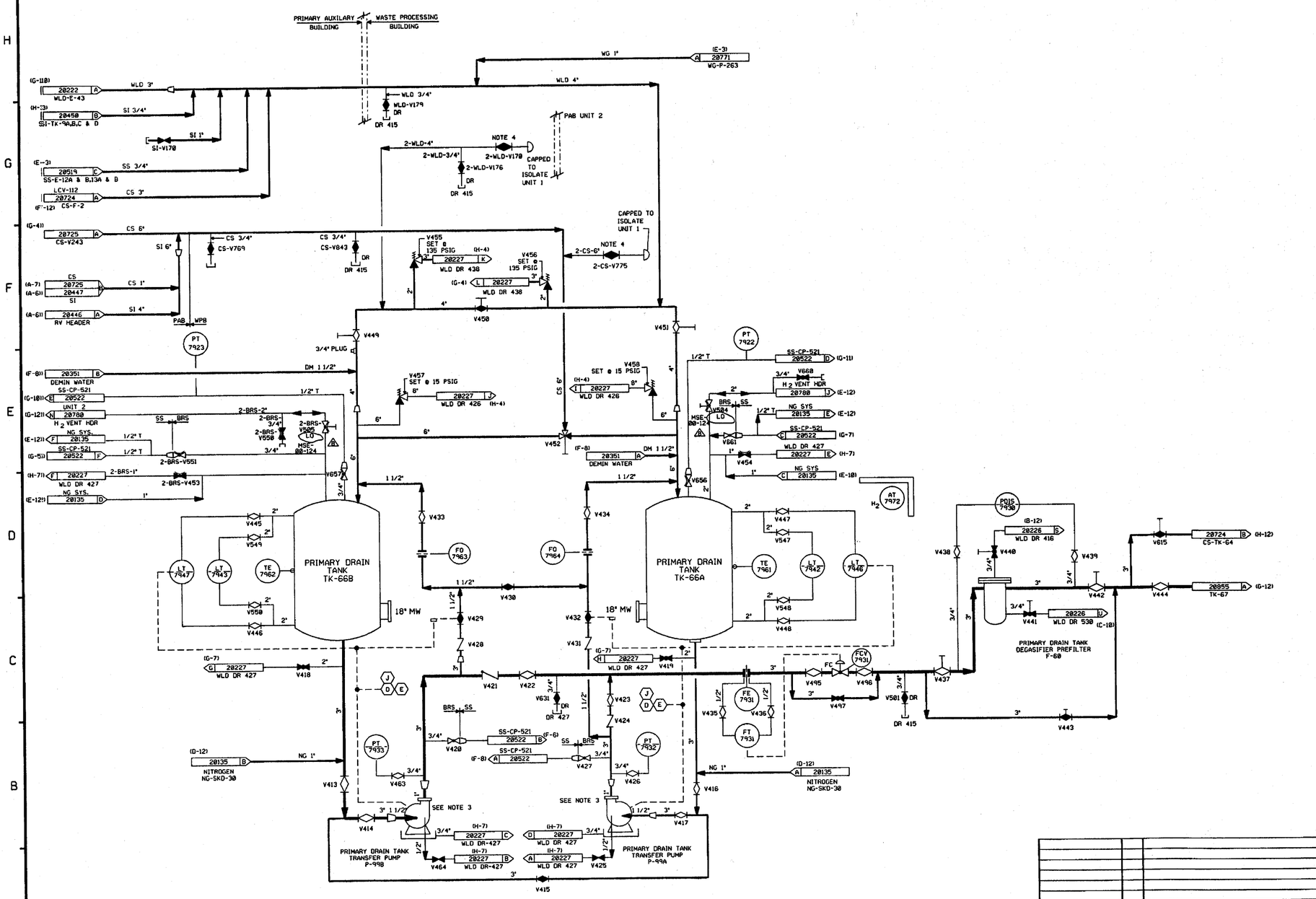

FOR P&ID REFERENCES DRAWINGS, SYMBOLS AND ABBREVIATIONS REFER TO DRAWINGS P&ID - LEGEND 1 AND P&ID - LEGEND 2.

NOTES:

1. ALL LINES, EQUIPMENT, COMPONENTS AND INSTRUMENTS HAVE SYSTEM PREFIX "BRS" UNLESS NOTED OTHERWISE.
2. WORK THIS DWG WITH DWG'S 20053, 20055, 20056, 20057, 20058, 20059, 20860 & 20861.
3. SEE DRAWING DM-20353 FOR WATER SUPPLY TO PUMP DOUBLE MECHANICAL SEALS.
4. VALVE IS CLOSED DURING UNIT 2 CONSTRUCTION.
5. △ INDICATES REVISION LEVEL
6. ALL LINES, EQUIPMENT, COMPONENTS AND INSTRUMENTS ARE SAFETY CLASS NNS, UNLESS NOTED OTHERWISE.
7. INSTRUMENT REFERENCES:
   - (D) FROM 1-BRS-FS-7925 ON DWG BRS-20855 (F-7)
   - (E) FROM 1-BRS-PSHH-7924 ON DWG BRS-20855 (F-7)
   - (J) FROM 1-BRS-PSH-3-1 ON DWG BRS-20855 (F-5)

REV	DATE	DSGN	DRWN	CHKD	CDE	SES	DESCRIPTION
8	5/8/96	BCS	—	DWS	MRB	DJM	INCORP MSE 00-124 REV. 0
7	6/6/99	DWS	—	RWS	BCS	DJM	INCORP MMOD 970618 DCN#00
6	11/7/92	DWS	—	BCL	DWS	DJM	INCORP DCR 870084 CA#0 & 5
5	4-23-92	MRB	—	MPW	DWS	JEV	REMOVED REF. TO UNIT 2 (LATER) INCORP MMOD'S "L-511 CA0 & "L-515 CA0
4	5/26/89	MRB	FCB	PAL	GPM	IW	INCORP. DCR 87-110 CA 11 REVISED: CONT. COORD. ADDED: NOTE 6
3	1/6/88	MPW	JM	DWS	MPW	MJY	INCORP. DCR 87-314 & ECA 19/101717A UNIT 2 VALVES SHOWN CLOSED PER NOTE 4, REVISED: FLOW ON BYPASS LINE, CONT. COORDINATES ADDED: FLOW ARROW TO TK-66A.
2	10/3/86	CSB	DWS	BCL	VNK	RRC	REV'D. WG 1" LINE (FROM WG-P-263) TO AGREE WITH P&ID 20222 & REV'D CONT FLAG (20771), ADDED PAB/WPB BOUNDARY, CONT FLAG IDENT LETTER "C" (20519) & "A" (20855), ADDED "LCV-112A" TO CONT FLAG (20724). ADDED NOTE 5.
1	6/19/86	JDM	OPD	DWS	JMCS	RRC	REMOVED CHANGE ITEMS 1 & 2. INCORP. ECA'S 19/24896, 19/116021A, 19/116172A, AND 805626 REV. 11
0	1/13/86	GD	SKN	JDM	ASK	WFD	ISSUED FOR OPERATIONS

REF. DRAWING NO.	REV	TITLE
9763-F-805626	11	BORON RECOVERY SYS PRI DRAIN TKS P&ID

North Atlantic Energy Service Corporation

SEABROOK STATION

BORON RECOVERY SYSTEM
DEGASIFICATION
DETAIL

PID- 1-BRS-B20854

05/30/96

PID- 1-BRS-B20855

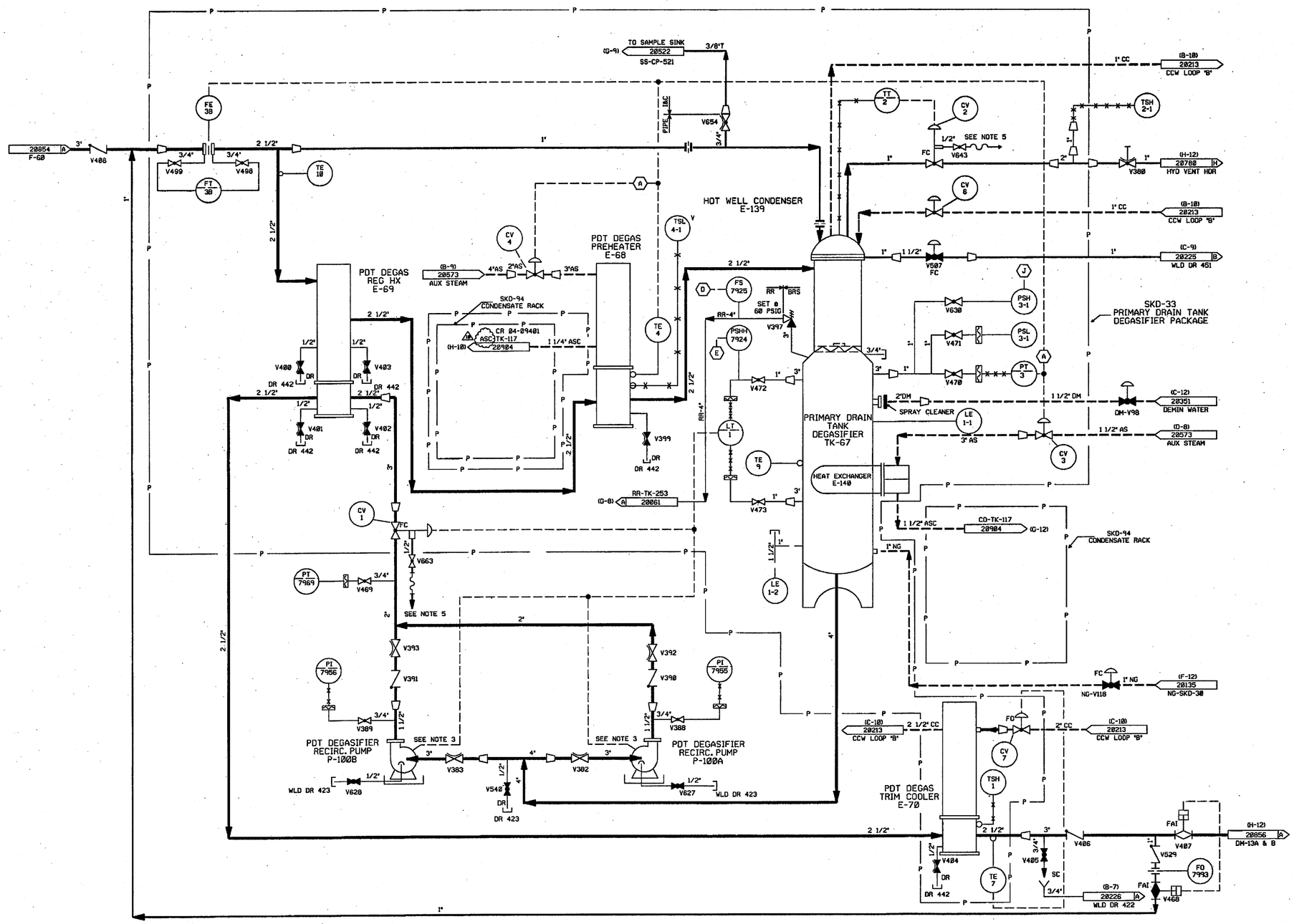

FOR P&ID REFERENCE DRAWINGS, SYMBOLS AND ABBREVIATIONS
REFER TO DRAWINGS P&ID - LEGEND 1 AND P&ID - LEGEND 2

NOTES:

1. ALL LINES, EQUIPMENT, COMPONENTS AND INSTRUMENTS HAVE SYSTEM PREFIX "BRS" UNLESS NOTED OTHERWISE.
2. WORK THIS DWG WITH DWG'S 20853, 20854, 20856, 20857, 20858, 20859, 20869 & 20861
3. SEE DWG DM-20354 FOR WATER SUPPLY TO PUMP DOUBLE MECHANICAL SEALS.
4. △ INDICATES REVISION LEVEL
5. REFER TO DRAWING VSL-20774 FOR VALVE LEAKOFF.
6. ALL LINES, EQUIPMENT, COMPONENTS AND INSTRUMENTS ARE SAFETY CLASS NNS UNLESS NOTED OTHERWISE.
7. INSTRUMENT REFERENCES:
   - (A) TO 1-BRS-CV-3 & 4 ON DWG AS-20573 (D-10).
   - (D)(E)(J) TO 1-AS-CV-3, 1-AS-CV-4 ON DWG AS-20573 (D-9).
     TO 1-BRS-P-99A & B ON DWG BRS-20854 (C-8) (C-10).
     TO 1-DM-V98 ON DWG DM-20351 (C-12)

REV	DATE	DSGN	CHKD	CE	DESCRIPTION
10	12-8-04	BCS	JM	RRB	INCORP CR 04-09401 REV. 00
9	8/30/88	BCS	MPW	RCP	INCORP MMOD 98-641 DCN-00
8	12/7/92	MRB	DWS	DJM	INCORP DCR 87-84 CA 28
7	11/7/92	MRB	BCL	DJM	INCORP. DCR 87-84 CA"0, 5 & 25 ADDED: NOTE 14 & INSTR. REFERENCE REMOVED FLANGES FROM B P&ID
6	12/28/89	MRB	PAL	ES	INCORP. DCR 86-113 CA01.
5	5/25/88	GPM	APL	DJM	INCORP. DCR 88-003 REVISED: V382, 383, 393, 397, 399, 400, 401, 402, 403, & 404 VALVE SYMBOL PER FP 53578. ADDED: RESTRICTING ORIFICE SYMBOL TO INLET E-139 PER FP 53759, NOTE 6 PER UE & C P & ID 805618.
4	8/14/87	GPM	MPW	RRC	INCORP. ECA 19/107988 REV'D. TO CLARIFY DUPLICATION OF ASSOC SYSTEM & NOTE 3. ADDED: NOTE 5, CONT COOR'D, LINE SIZE & FLG'S
3	1/23/87	JDM	WRD	RRC	INCORP. DCR-618
2	8/26/86	MPW	MAP	RRC	REMOVED NONAPPLICABLE REF DWGS. INCORP NCR 95/162, ECA 19/117127A SYSTEM CHANGED TO BRS ON VALVES CV-3, CV-4, CV-5 & CV-7 : WAS AS AND CC IN ERROR, ADDED CONTINUATIONS.
1	6/16/86	DWS	JDM	RRC	INCORP'D ECA 99/114788A
0	1/13/86	GD	JDM	WFD	ISSUED FOR OPERATIONS

RECORDS MANAGEMENT DEPT.
CONTROL NUMBER _____

REF. DRAWING NO.	REV	TITLE
9763-F-805618	10	BORON RECOV SYS-PRIM DRAIN TK DEGAS P&ID

FPL ENERGY Seabrook Station

BORON RECOVERY SYSTEM
DEGASIFICATION
DETAIL

PID- 1-BRS-B20855

12/04/04

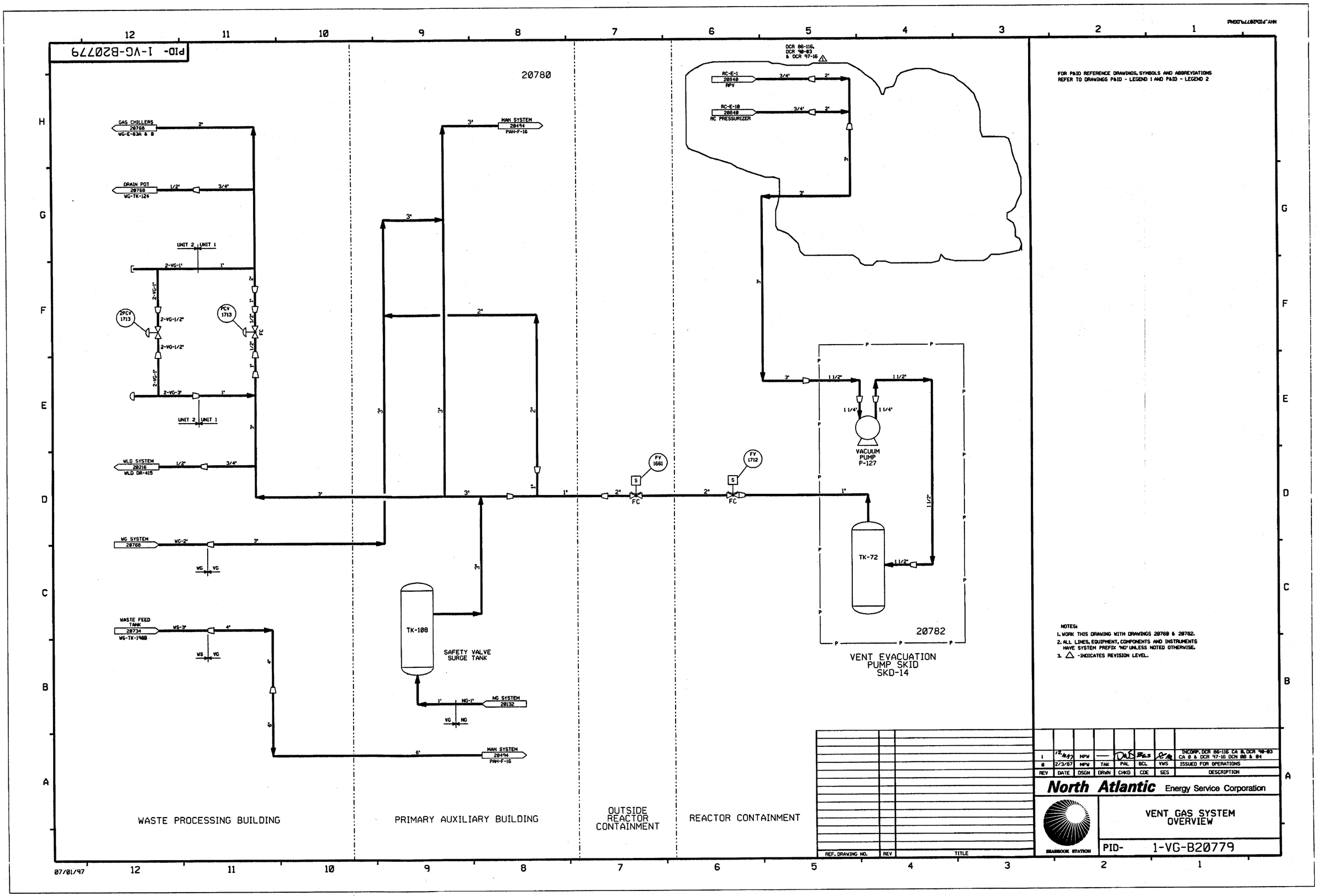
PID- 1-VG-B20779
20780
20782
GAS CHILLERS 20768 WG-E-83A & B
DRAIN POT 20768 WG-TK-124
WLD SYSTEM 20216 WLD DR-415
WG SYSTEM 20768
WASTE FEED TANK 20734 WS-TK-1900
MAH SYSTEM 20494 PAH-F-16
NG SYSTEM 20132
RC-E-1 20840 RPV
RC-E-10 20840 RC PRESSURIZER
DCR 86-116, DCR 90-03 & DCR 97-16
UNIT 2 UNIT 1
2PCV 1713
PCV 1713
FV 1661
FV 1712
VACUUM PUMP P-127
TK-72
TK-108
SAFETY VALVE SURGE TANK
VENT EVACUATION PUMP SKID SKD-14
WASTE PROCESSING BUILDING
PRIMARY AUXILIARY BUILDING
OUTSIDE REACTOR CONTAINMENT
REACTOR CONTAINMENT
FOR P&ID REFERENCE DRAWINGS, SYMBOLS AND ABBREVIATIONS REFER TO DRAWINGS P&ID - LEGEND 1 AND P&ID - LEGEND 2
NOTES:
1. WORK THIS DRAWING WITH DRAWINGS 20780 & 20782.
2. ALL LINES, EQUIPMENT, COMPONENTS AND INSTRUMENTS HAVE SYSTEM PREFIX "NG" UNLESS NOTED OTHERWISE.
3. △ -INDICATES REVISION LEVEL.
REF. DRAWING NO. REV TITLE
1 12/4/97 MPW — DAS BES INCORP. DCR 86-116 CA 0, DCR 90-03 CA 0 & DCR 97-16 DCN 00 & 04
0 2/3/87 MPW TAK PAL BCL VWS ISSUED FOR OPERATIONS
REV DATE DSGN DRWN CHKD CDE SES DESCRIPTION
North Atlantic Energy Service Corporation
SEABROOK STATION
VENT GAS SYSTEM OVERVIEW
PID- 1-VG-B20779
07/01/97

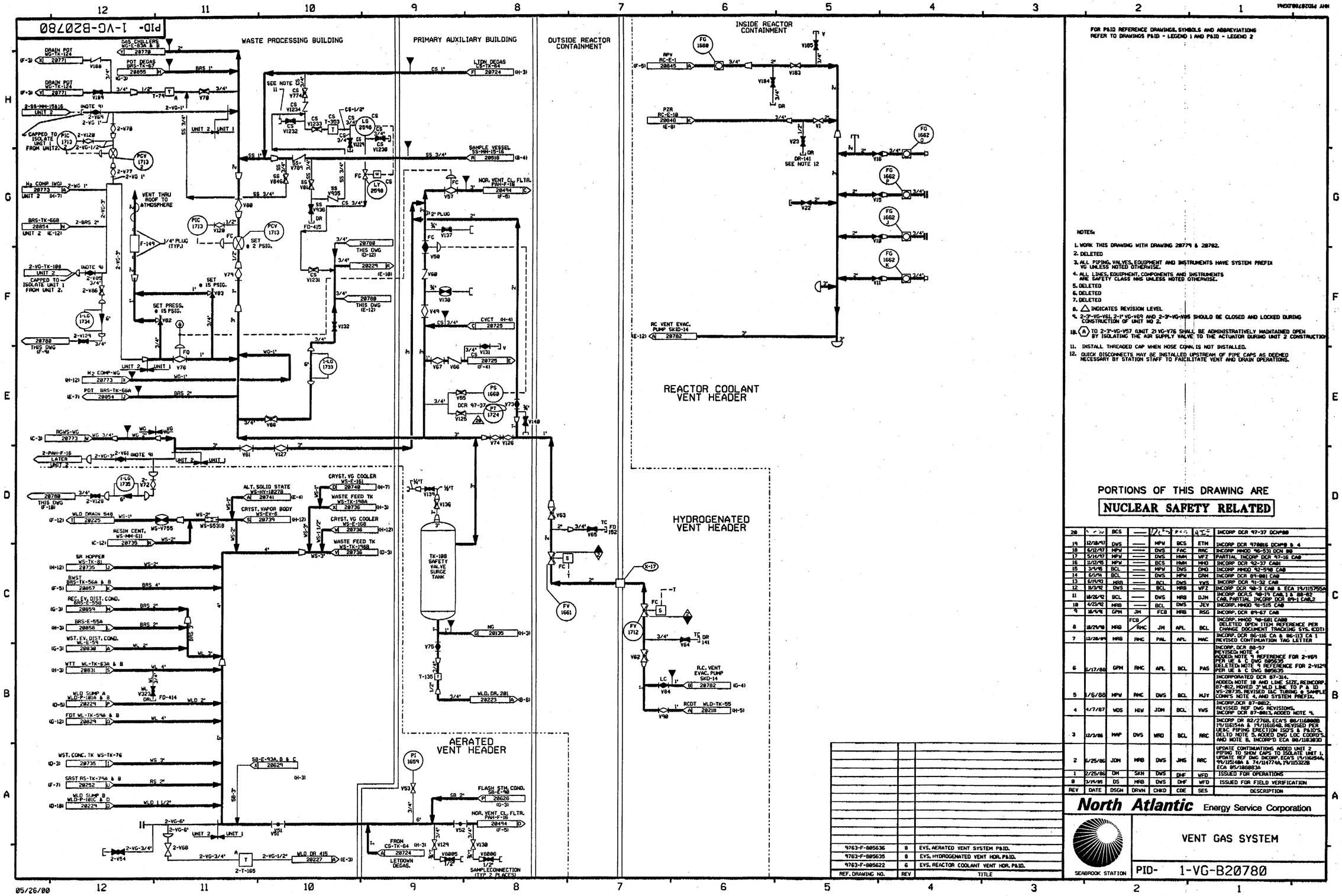

FOR P&ID REFERENCE DRAWINGS, SYMBOLS AND ABBREVIATIONS REFER TO DRAWINGS P&ID - LEGEND 1 AND P&ID - LEGEND 2

NOTES:

1. WORK THIS DRAWING WITH DRAWING 20779 & 20782.
2. DELETED
3. ALL PIPING, VALVES, EQUIPMENT AND INSTRUMENTS HAVE SYSTEM PREFIX VG UNLESS NOTED OTHERWISE.
4. ALL LINES, EQUIPMENT, COMPONENTS AND INSTRUMENTS ARE SAFETY CLASS NNS UNLESS NOTED OTHERWISE.
5. DELETED
6. DELETED
7. DELETED
8. △ INDICATES REVISION LEVEL
9. 2-3"-VG-V61, 2-1"-VG-V69 AND 2-3"-VG-V95 SHOULD BE CLOSED AND LOCKED DURING CONSTRUCTION OF UNIT NO 2.
10. (A) TO 2-3"-VG-V57 (UNIT 2) VG-V76 SHALL BE ADMINISTRATIVELY MAINTAINED OPEN BY ISOLATING THE AIR SUPPLY VALVE TO THE ACTUATOR DURING UNIT 2 CONSTRUCTION
11. INSTALL THREADED CAP WHEN HOSE CONN. IS NOT INSTALLED.
12. QUICK DISCONNECTS MAY BE INSTALLED UPSTREAM OF PIPE CAPS AS DEEMED NECESSARY BY STATION STAFF TO FAICILITATE VENT AND DRAIN OPERATIONS.

PORTIONS OF THIS DRAWING ARE

NUCLEAR SAFETY RELATED

REV	DATE	DSGN	DRWN	CHKD	CDE	SES	DESCRIPTION
20	[illegible]	BCS	—	[illegible]	[illegible]	[illegible]	INCORP DCR 97-37 DCN#80
19	12/18/97	DWS	—	MPW	BCS	ETM	INCORP DCR 970816 DCN#3 & 4
18	6/12/97	MPW	—	DWS	FAC	RRC	INCORP MMOD 96-531 DCN 88
17	5/14/97	MPW	—	DWS	HMM	WFZ	PARTIAL INCORP DCR 97-16 CA8
16	11/12/95	MPW	—	BCS	HMM	MHD	INCORP DCR 92-37 CA81
15	3/4/95	BCL	—	MPW	DWS	DMD	INCORP MMOD 92-598 CA8
14	6/1/94	BCL	—	DWS	MPW	GRH	INCORP DCR 89-081 CA8
13	6/19/93	MRB	—	BCL	DWS	VWS	INCORP DCR 91-32 CA8
12	11/3/92	DWS	—	BCL	MRB	WFZ	INCORP DCR 90-3 CA8 & ECA 19/1157655A
11	10/26/92	BCL	—	DWS	MRB	DJM	INCORP DCR,S 90-19 CA8,1 & 88-82 CA8, PARTIAL INCORP DCR 89-1 CA8,2
10	4/23/92	MRB	—	BCL	DWS	JEV	INCORP. MMOD 91-515 CA8
9	10/9/91	GPM	JM	FCB	MRB	RSG	INCORP. DCR 89-67 CA8
8	10/29/90	MRB	FCB / RMC	JM	APL	BCL	INCORP. MMOD 90-681 CA8 DELETED OPEN ITEM REFERENCE PER CHANGE DOCUMENT TRACKING SYS. (CDT)
7	12/28/89	MRB	RMC	PAL	APL	MAC	INCORP. DCR 86-116 CA & 86-113 CA 1 REVISED CONTINUATION TAG LETTER
6	5/17/88	GPM	RMC	APL	BCL	PAS	INCORP. DCR 88-57 REVISED: NOTE 4 ADDED: NOTE 9, REFERENCE FOR 2-V69 PER UE & C DWG 885635 DELETED: NOTE 9 REFERENCE FOR 2-V129 PER UE & C DWG 885635
5	1/6/88	MPW	RMC	DWS	BCL	MJY	INCORPORATED DCR 87-314. ADDED: NOTE 10 AND LINE SIZE. REINCORP. 87-812. MOVED 3" WLD LINE TO P & ID WS-20735. REVISED IAC TUBING & SAMPLE CONN'S NOTE 4, AND SYSTEM PREFIX.
4	4/7/87	WDS	HIW	JDM	BCL	VWS	INCORP. DCR 87-0812. REVISED REF DWG REVISIONS. INCORP DCR 87-0813, ADDED NOTE 9.
3	12/3/86	MAP	DWS	WRD	BCL	RRC	INCORP DR 82/2768. ECA'S 86/1168088 19/1161594 & 19/1161648. REVISED PER VEAC PIPING ERECTION ISO'S & P&ID'S. DELTD NOTE 5. ADDED DWG LOC COORD'S. AND NOTE 8. INCORP'D ECA 86/1183830
2	6/25/86	JDM	MRB	DWS	JMS	RRC	UPDATE CONTINUATIONS ADDED UNIT 2 PIPING TO SHOW CAPS TO ISOLATE UNIT 1. UPDATE REF DWG INCORP. ECA'S 19/1161544A, 19/1151418A & 74/114774A, 19/1153228 ECA 85/1068863A
1	2/25/86	DM	SKN	DWS	DMF	WFD	ISSUED FOR OPERATIONS
0	3/19/85	DS	MRB	DWS	DMF	WFD	ISSUED FOR FIELD VERIFICATION

REF. DRAWING NO.	REV	TITLE
9763-F-885636	8	EVS. AERATED VENT SYSTEM P&ID.
9763-F-885635	8	EVS. HYDROGENATED VENT HDR. P&ID.
9763-F-885622	6	EVS. REACTOR COOLANT VENT HDR. P&ID.

North Atlantic Energy Service Corporation

SEABROOK STATION

VENT GAS SYSTEM

PID- 1-VG-B20780

PID- 1-VG-B20782

FOR P&ID REFERENCE DRAWINGS, SYMBOLS AND ABBREVIATIONS REFER TO DRAWINGS P&ID - LEGEND 1 AND P&ID - LEGEND 2

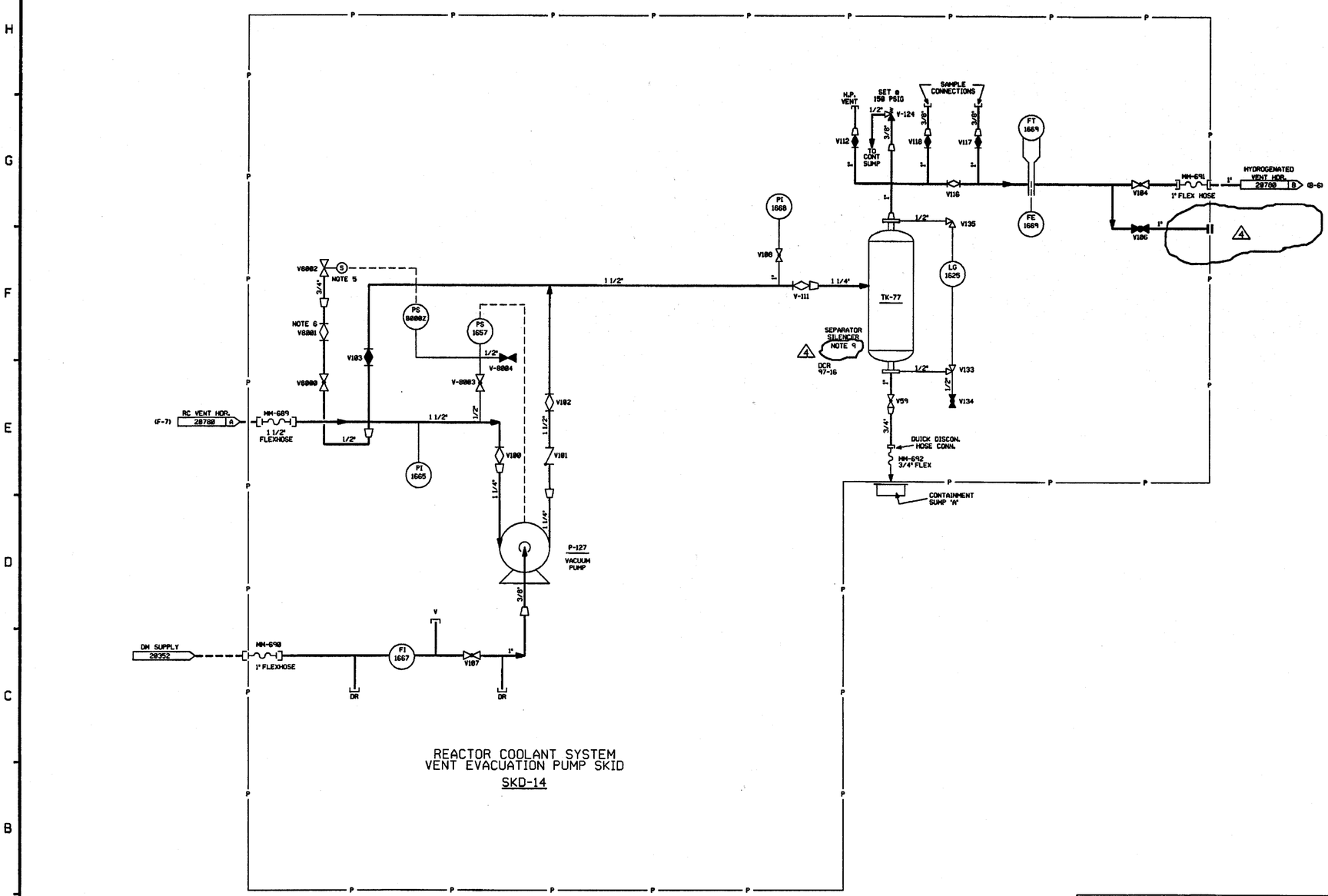

REACTOR COOLANT SYSTEM
VENT EVACUATION PUMP SKID

SKD-14

NOTES:

1. WORK THIS DRAWING WITH 20780.
2. SYSTEM DESCRIPTION NO IS 34.
3. SYSTEM PREFIX IS "VG" UNLESS OTHERWISE NOTED.
4. SYSTEM DESIGN PRESSURE (EXCLUDING PUMP) =150 PSIG.
   PUMP DESIGN PRESSURE =15 PSIG
   SYSTEM DESIGN TEMPERATURE =150° F
5. VACUUM BREAKER ASSEMBLY CONSISTING OF V-8000, V-8001 V-8002, AND PS-8000Z-SET AT 20 IN. HGVAC.
6. VALVE V-8001 IS SET TO METER FLOW TO MAINTAIN 19 1/2 IN. HGVAC.
7. ALL PIPING AND INSTRUMENTS ARE SAFETY CLASS NNS UNLESS NOTED OTHERWISE.
8. △ INDICATES REVISION LEVEL.
9. DURING PERIODS OF PRESSURIZER PURGING, 1-VG-SKD-143 MAY BE INSTALLED IN PLACE OF 1-VG-TK-77, REF. DCR 97-16.

△4 DCR 97-16

REV	DATE	DSGN	DRWN	CHKD	CDE	SES	DESCRIPTION
4	12/10/97	MPW	—	BCL	DWS	RCM	INCORP. DCR 97-16 DCN 88 & 84. REMOVED LATER CONTINUATION
3	4/24/96	HRB	RMC	JM	APL	BCL	INCORP. MMOD 96-516 CA 8
2	11/18/95	JDM	OPO	WRD	BCL	RRC	INCORP. ECA 88/1167468, REV'D VALVE TYPES & POSITION PER UEAC P&ID. REV'D REVISION BLOCK & ADDED NOTE 8, DWG. LOC. COORD'S.
1	6/16/95	BCL	SKN	JDM	JHS	RRC	ISSUED FOR OPERATIONS, ADDED TAG NUMBERS
0	2/28/95	MOB	N/A	JNM	DHF	WFD	INITIAL ISSUE

REF. DRAWING NO.	REV	TITLE
9763-F-885622	6	EVS. REACTOR COOLANT VENT HDR. P & ID

North Atlantic Energy Service Corporation

SEABROOK STATION

VENT GAS SYSTEM
RCS AIR EVACUATION SKID
P & I DIAGRAM

PID- 1-VG-B20782

12/10/97