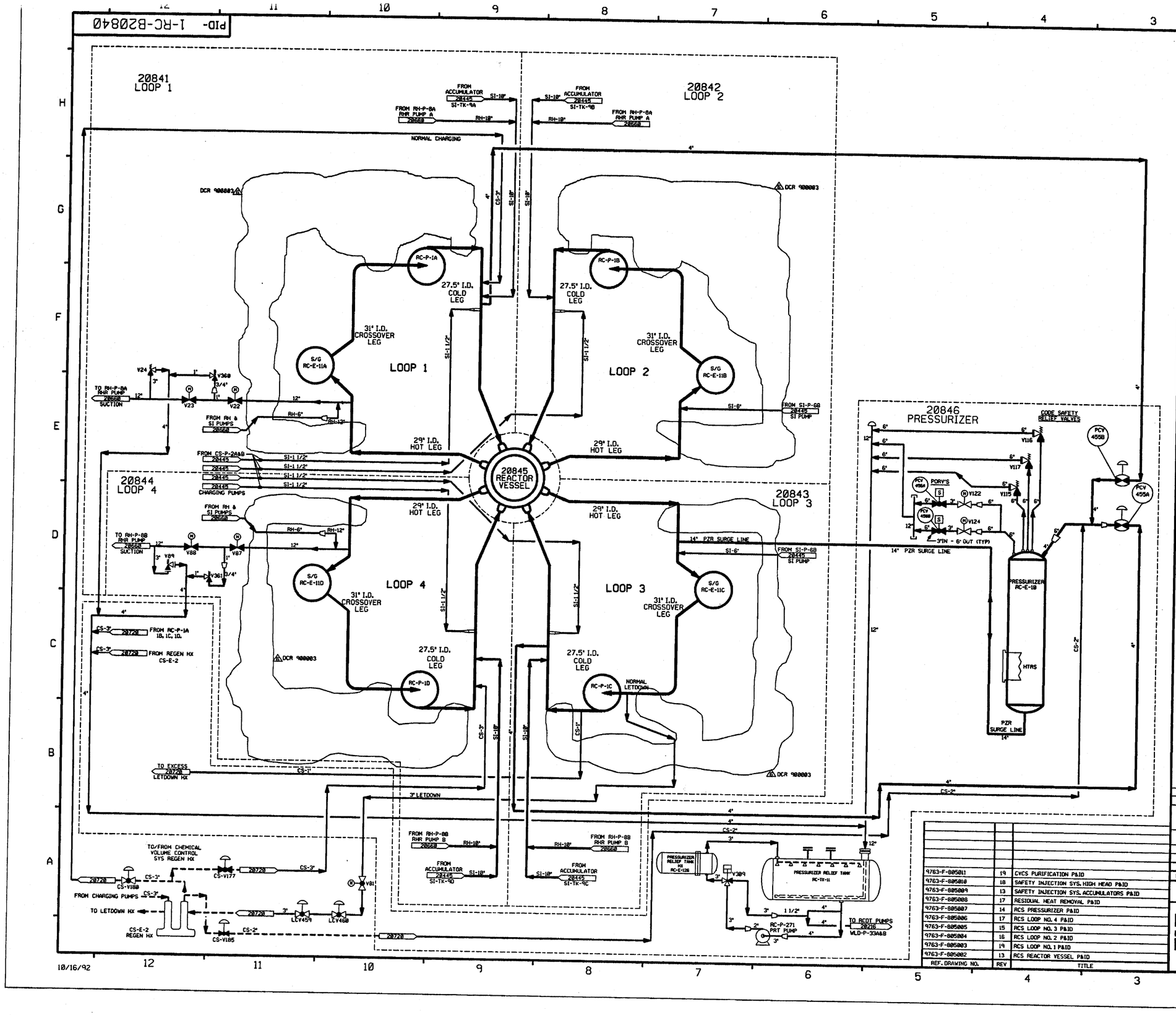

NOTES:

1. WORK THIS DRAWING WITH DRAWINGS 20841 THROUGH 20846 & 20848.
2. ALL LINES, EQUIPMENT, COMPONENTS, AND INSTRUMENTS HAVE SYSTEM PREFIX RC UNLESS OTHERWISE NOTED.
3. DELETED.
4. △ - INDICATES REVISION LEVEL.

REV	DATE	DSGN	DRWN	CHKD	CDE	SES	DESCRIPTION
6	11/3/92	DWS	—	BCL	MRB	[illegible]	INCORP DCR 900003 CA#0
5	12/16/91	RMC	—	FCB	MRB	BCL	INCORP. MMOD 91-511 CA01
4	3/22/88	GPH	JM	BCL	DWS	RRC	TRANSFERED GENERAL NOTES AND DETAILS A,B & C TO NEW DRAWING RC-B20848. REVISED NOTE 1. DELETED NOTE 3.
3	1/29/87	MPW	TAK	WRD	BCL	VWS	ADDED NOTE 4, REVISED PER LATEST SYSTEM DRAWINGS
2	3/21/86	TAK	WES	DWS	ASK	WFD	ISSUED FOR OPERATIONS
1	7/29/85	GFS	GFS	TAK	PEF	WFD	GENERAL REVISION
0	2/28/85	GFS	GFS	JNM	PEF	WFD	ISSUED FOR FIELD VERIFICATION

REF. DRAWING NO.	REV	TITLE
9763-F-805011	19	CVCS PURIFICATION P&ID
9763-F-805010	18	SAFETY INJECTION SYS. HIGH HEAD P&ID
9763-F-805009	13	SAFETY INJECTION SYS. ACCUMULATORS P&ID
9763-F-805008	17	RESIDUAL HEAT REMOVAL P&ID
9763-F-805007	14	RCS PRESSURIZER P&ID
9763-F-805006	17	RCS LOOP NO. 4 P&ID
9763-F-805005	15	RCS LOOP NO. 3 P&ID
9763-F-805004	16	RCS LOOP NO. 2 P&ID
9763-F-805003	19	RCS LOOP NO. 1 P&ID
9763-F-805002	13	RCS REACTOR VESSEL P&ID

North Atlantic Energy Service Corporation

SEABROOK STATION

REACTOR COOLANT SYSTEM OVERVIEW

PID- 1-RC-B20840

P10-1-RC-B20845

REACTOR CONTAINMENT BUILDING

TRAIN B ELECTRICAL TUNNEL

REACTOR CAVITY

REACTOR CAVITY WALL

REACTOR VESSEL RC-E-1

SAFETY CLASS 1

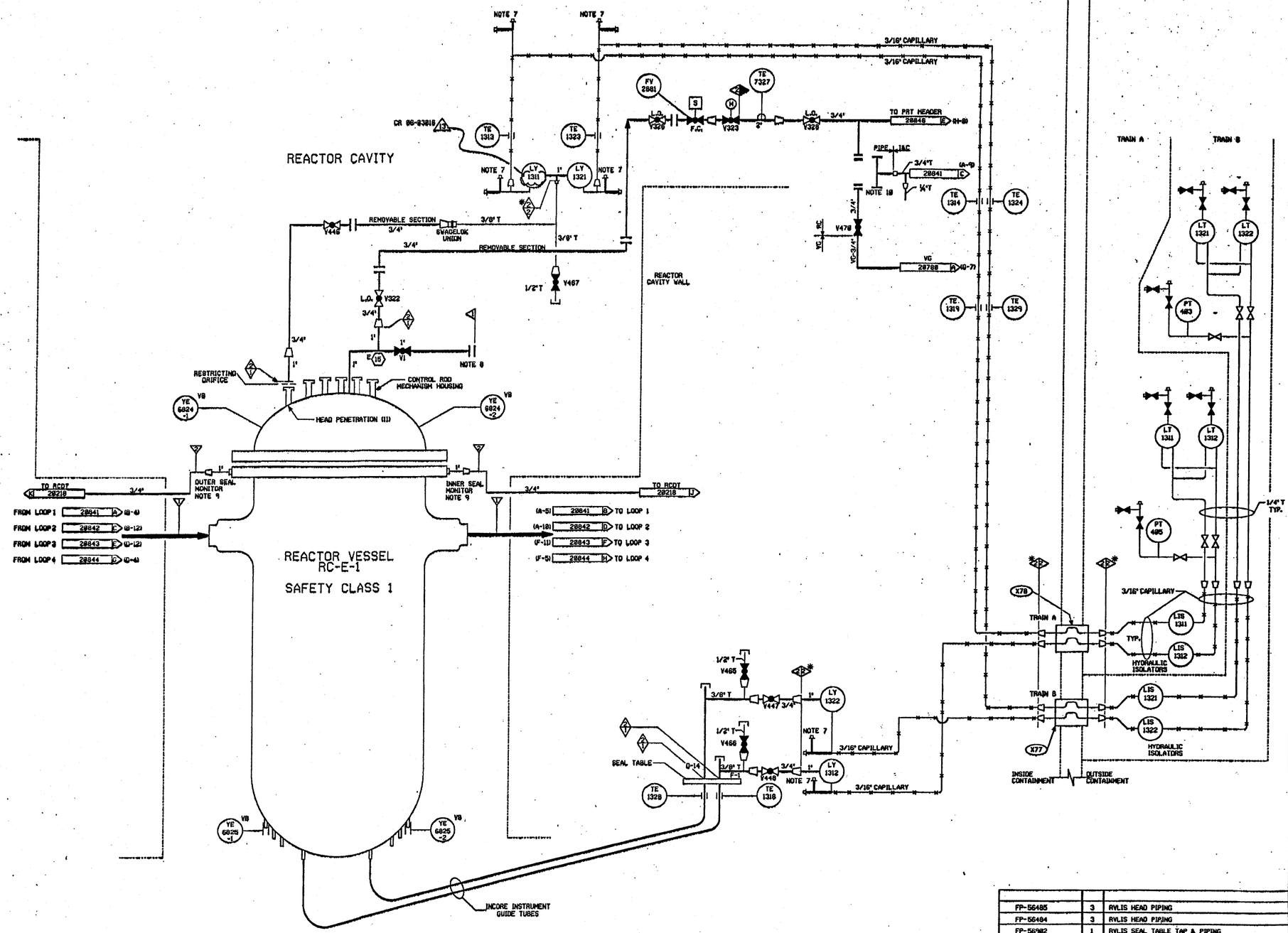

FOR P&ID REFERENCE DRAWINGS, SYMBOLS AND ABBREVIATIONS REFER TO DRAWINGS P&ID - LEGEND 1 AND P&ID - LEGEND 2

NOTES:

1. ⬡ INDICATES GENERAL NOTE NUMBER.- REFER TO DRAWING 28848 FOR GENERAL NOTES.
2. WORK THIS DRAWING WITH 28845, 28841,28842, 28843, 28844, 28846 & 28848.
3. ALL LINES, EQUIPMENT, COMPONENTS, AND INSTRUMENTATION HAVE SYSTEM PREFIX "RC" UNLESS OTHERWISE NOTED
4. VENTS, DRAINS & TEST CONN. CODE BREAKS ARE AT THE DOWNSTREAM END OF THE OUTER ISOLATION VALVE PER I-HHY-005111 UNLESS NOTED OTHERWISE.
5. △ - INDICATES REVISION LEVEL.
6. DELETED
7. CAPILLARY FILL & VENT VALVE: SEE FP-56496
8. DURING PLANT OPERATION VENT IS SEALED WITH A SAFETY CLASS 1 BLIND FLANGE
9. CLASS 1 TO CLASS 2 BOUNDARY AT THE METALLIC O-RING AND THE REACTOR VESSEL FLANGE.
10. SPOOL TO BE INSTALLED ONLY IN MODES 5, 6 FOR RCS VENTING, REFILLING, AND OTHER SHUTDOWN OPERATIONS.

PORTIONS OF THIS DRAWING ARE

NUCLEAR SAFETY RELATED

REF. DRAWING NO.	REV	TITLE
FP-56485	3	RVLIS HEAD PIPING
FP-56484	3	RVLIS HEAD PIPING
FP-56982	1	RVLIS SEAL TABLE TAP & PIPING
FP-56496	1	ITT BARTON TEE IN LINE FILL VALVES
FP-56493	1	HIGH VOLUME SENSOR
FP-56827	1	RVLIS CAPILLARY SCHEMATIC
9763-F-585275	8	INSTRUMENT INSTALLATION - RVLIS
9763-F-885082	13	RCS REACTOR VESSEL P&ID

REV	DATE	DSGN	CHKD	CE	DESCRIPTION
13	4-20-06	JM	BCS	GRD	INCORP CR 86-03816 REV 88
12	10/25/00	BCS	MRB	WFZ	INCORP. DCR 96-8009 DCN-48
11	4/30/99	RWS	DWS	GRM	INCORP. DCR 96-8009 DCN# 8
10	4/16/97	BCS	MPW	WMF	INCORP. DCR 96-8015 CA 8
9	11/12/95	MPW	BCS	MHD	INCORP. DCR 92-37 CA 81
8	11/11/89	MRB	PNL	GPM	INCORP. DCR'S 87-136 CA-11 & 88-116 CA-83 REVISED CONTINUATION TAG LETTERS
7	12/15/87	GPM	DWS	PAS	REVISED: NOTES, RENUMBERED NOTES, ADDED: NOTE 4 & 9, FLOW RESTRICTOR INDICATOR SYMBOL, DELETED: NOTE 6 & NNS-1 CLASS BOUNDARY, INCOMPLETE ITEMS ECA 85/184982F (CORRECTLY INCORP. PER FP-56982 PREVIOUS REV.)
6	11/04/86	JOH	BCL	RRC	REVISED SEAL TABLE INST. TAP CONNECTIONS PER FP-56982, ADDED CONT. FLAG REF. COORD'S AND INCOMPLETE ITEM, CORRECTED DRAFTING ERRORS, REMOVED ELECTRICAL SIGNALS PER LEAC P&ID.
5	3-7-85	GFS	JHM	WFD	ISSUED FOR FIELD VERIFICATION

FPL ENERGY Seabrook Station

REACTOR COOLANT SYSTEM
REACTOR VESSEL P & ID

PID- 1-RC-B20845

03/24/06

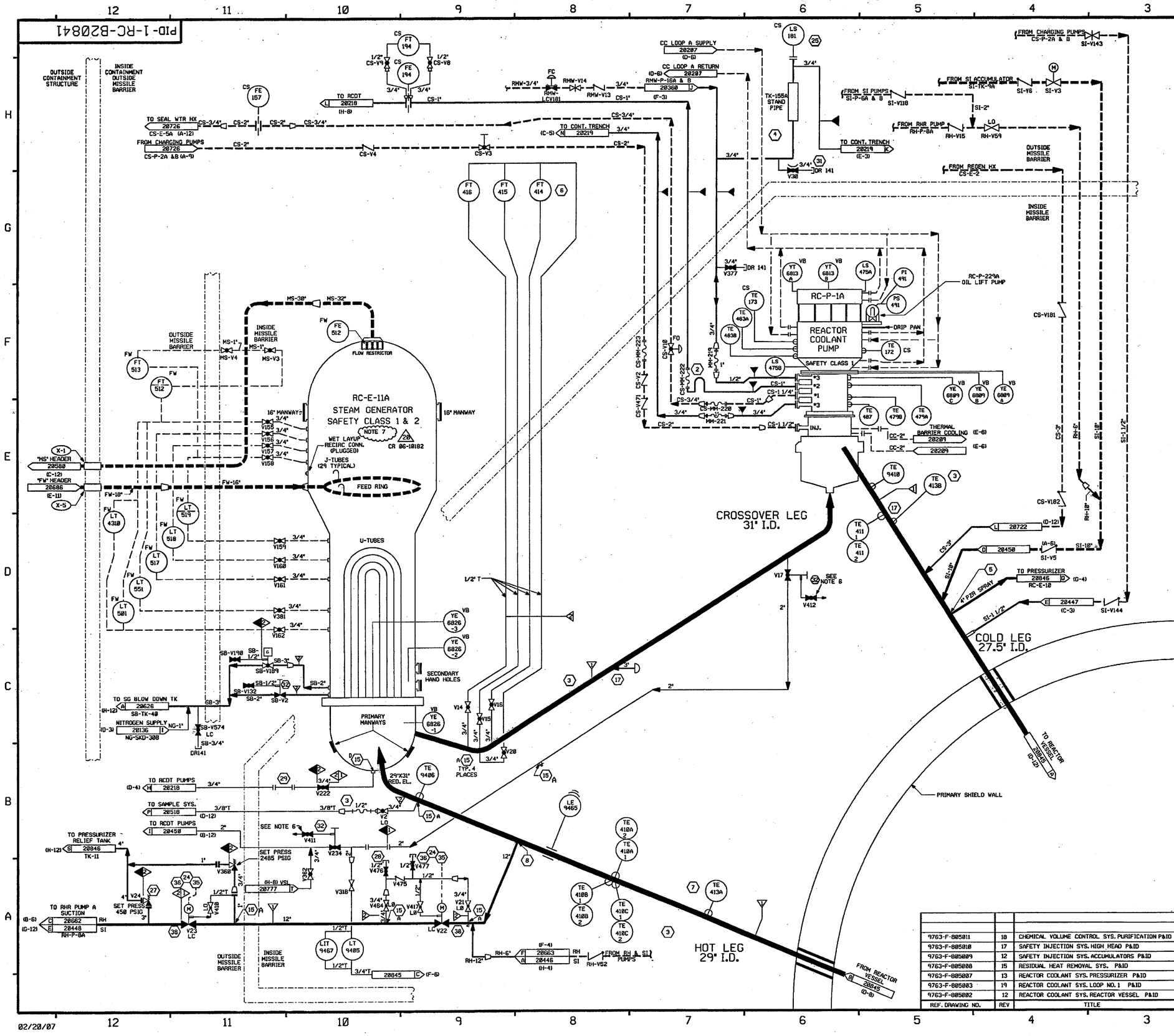

FOR P&ID REFERENCE DRAWINGS, SYMBOLS AND ABBREVIATIONS REFER TO DRAWINGS P&ID - LEGEND 1 AND P&ID - LEGEND 2

NOTES:

1. ⬡ INDICATES GENERAL NOTE NUMBER - REFER TO DRAWING 20848 FOR GENERAL NOTES.
2. WORK THIS DRAWING WITH DRAWINGS 20840 AND 20842 THROUGH 20846 AND 20848.
3. ALL LINES, EQUIPMENT, COMPONENTS, AND INSTRUMENTATION HAVE SYSTEM PREFIX RC UNLESS OTHERWISE NOTED.
4. VENT, DRAIN & TEST CONN. CODE BREAKS ARE AT THE DOWNSTREAM END OF THE OUTER ISOLATION VALVE PER 1-NHY-805111, UNLESS NOTED OTHERWISE.
5. △ - INDICATES REVISION LEVEL.
6. VALVE STEM LEAK-OFF ISOLATION VALVES V411 & V412 ARE TO BE MAINTAINED CLOSED. VALVE STEM LEAK-OFF TO BE CONSIDERED INOPERABLE.
7. STEAM GENERATOR SHELL SIDE IS ANS SAFETY CLASS 2 AND MANUFACTURED AS ASME CODE CLASS 1.

△20 CR 06-10182

PORTIONS OF THIS DRAWING ARE

NUCLEAR SAFETY RELATED

REV	DATE	DSGN	CHKD	CE	DESCRIPTION
20	2-23-07	BCS	JM	RRB	INCORP CR 06-10182 REV. 0
19	8/12/03	BCS	JM	MPW	INCORP CR 03-06508 REV. 0
18	11/2/00	BCS	MPW	JPS	INCORP DCR 00-0010 DCN-00
17	7/3/98	DWS	MPW	DJM	INCORP DCR 910046 DCN*00
16	6/3/97	MPW	DWS	JPS	INCORP MMOD 97-567 DCN*00
15	11/17/95	BCS	RRC	DMQ	INCORP DCR 95-23 CA*11
14	11/11/95	BCL	MPW	RRB	INCORP DCR 95-23 CA*0,03
13	7/22/94	BCL	DWS	JEV	INCORP DCR 94-14 CA*0
12	11/3/92	DWS	BCL	ES	INCORP DCR 900003 CA*0
11	4-14-92	MRB	DWS	JEV	INCORP. MMOD 91-515 CA0
10	9/5/91	GPM	FCB	IW	INCORP. DCR 86-239 CA0
9	8/23/91	GPM	JM	WFZ	INCORP. DCR 89-51 CA06
8	12/29/89	MRB	APL	WFD	INCORP. DCR 87-136 CA-03 & MMOD 89-599 CA0
7	10/14/88	MRB	GPM	RRC	INCORP. NCR 86-60 REV 1 ADDED: VALVE LEAKOFF SYMBOL TO CLARIFY CLASS BREAK FOR SB-V189 & V2 PER UE & C P & ID 805003.
6	10/30/87	GPM	BCL	PAG	REV'D: PIPING PER ERECTION ISOMETRIC, GEN. NOTE NO'S, NOTES, RENUMBERED NOTES, MOVED TECH. NOTES TO GEN. NOTES ON DWG. RC-20848. ADDED: DETAIL LETTER DESIGNATION FOR FLOW RESTRICTOR. DELETED: DUPLICATED PIPING & INFO OF ASSOC SYS'S, FLEX HOSES, REDUNDANT CL BOUNDARY & NOTES.

REF. DRAWING NO.	REV	TITLE
9763-F-805011	18	CHEMICAL VOLUME CONTROL SYS. PURIFICATION P&ID
9763-F-805010	17	SAFETY INJECTION SYS. HIGH HEAD P&ID
9763-F-805009	12	SAFETY INJECTION SYS. ACCUMULATORS P&ID
9763-F-805008	15	RESIDUAL HEAT REMOVAL SYS. P&ID
9763-F-805007	13	REACTOR COOLANT SYS. PRESSURIZER P&ID
9763-F-805003	19	REACTOR COOLANT SYS. LOOP NO. 1 P&ID
9763-F-805002	12	REACTOR COOLANT SYS. REACTOR VESSEL P&ID

FPL ENERGY Seabrook Station

REACTOR COOLANT SYSTEM
LOOP NO. 1

PID- 1-RC-B20841

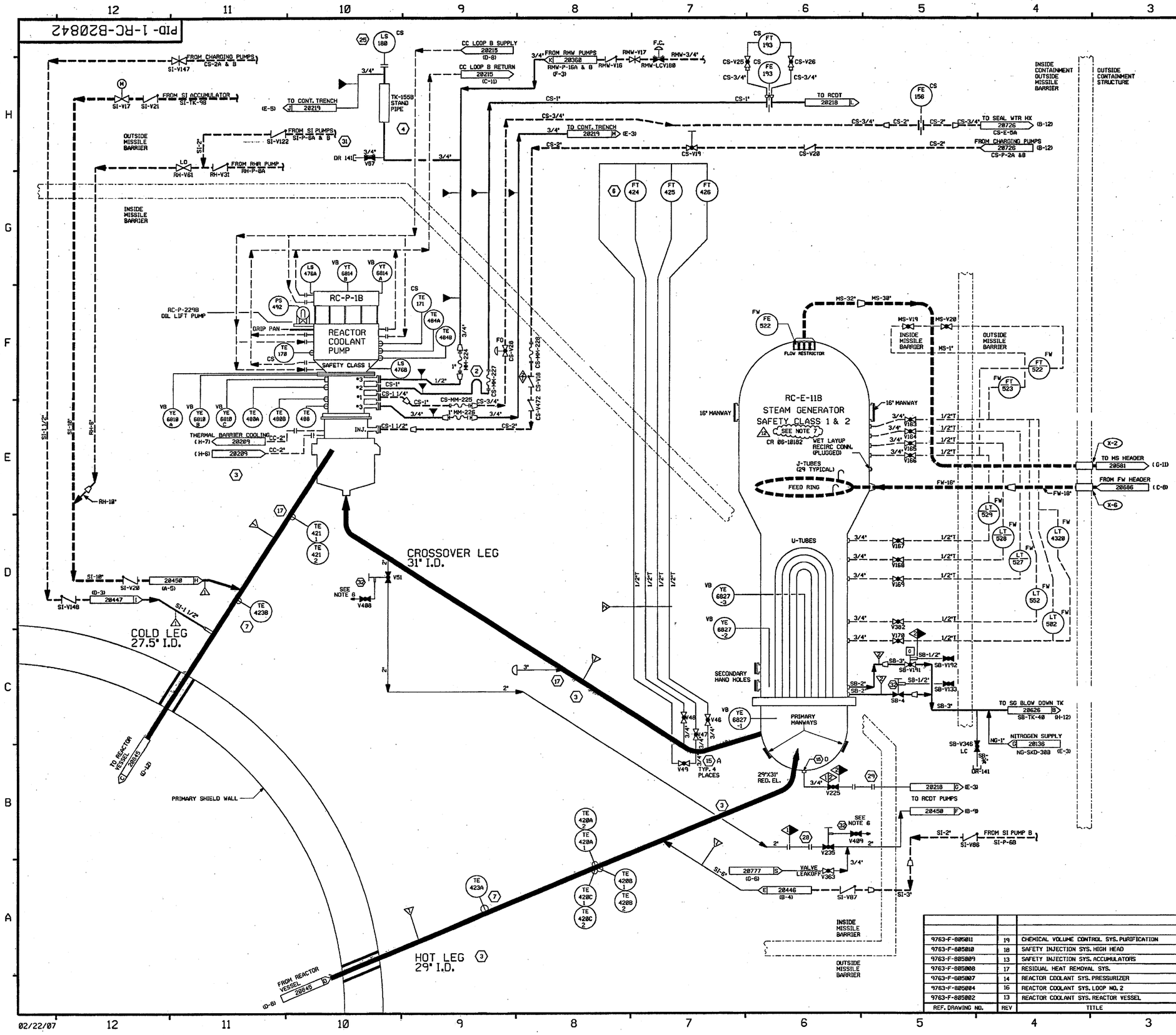

FOR P&ID REFERENCE DRAWINGS, SYMBOLS AND ABBREVIATIONS REFER TO DRAWINGS P&ID - LEGEND 1 AND P&ID - LEGEND 2

NOTES:

1. ⬡ INDICATES GENERAL NOTE NUMBER - REFER TO DRAWING 20848 FOR GENERAL NOTES.
2. WORK THIS DRAWING WITH DRAWINGS 20840, 20841 AND 20843 THROUGH 20846 AND 20848.
3. ALL LINES, EQUIPMENT, COMPONENTS, AND INSTRUMENTATION HAVE SYSTEM PREFIX RC UNLESS OTHERWISE NOTED.
4. VENT, DRAIN & TEST CONN. CODE BREAKS ARE AT THE DOWNSTREAM END OF THE OUTER ISOLATION VALVE PER 1-NHY-805111 UNLESS NOTED OTHERWISE.
5. △ INDICATES REVISION LEVEL
6. VALVE STEM LEAK-OFF ISOLATION VALVES V408 & V409 ARE TO BE MAINTAINED CLOSED. VALVE STEM LEAK-OFF TO BE CONSIDETED INOPERABLE.
7. THE STEAM GENERATOR SHELL SIDE IS ANS SAFETY CLASS 2 AND WAS MANUFACTURED AS ASME CODE CLASS 1.

CR 06-10182 12

PORTIONS OF THIS DRAWING ARE

NUCLEAR SAFETY RELATED

REV	DATE	DSGN	CHKD	CE	DESCRIPTION
12	2-23-07	BCS	JM	223	INCORP CR 06-10182 REV. 0
11	7/3/98	DWS	MPW	DJM	INCORP DCR 910046 DCN#00
10	7/22/94	BCL	DWS	JMcC	INCORP DCR 94-14 CA#0
9	11/3/92	DWS	BCL	ES	INCORP DCR 900003 CA#0
8	4/14/92	MRB	DWS	JEV	INCORP. MMOD 91-515 CA0
7	12/29/89	MRB	APL	WFD	INCORP. MMOD 89-599 CA
6	10/14/88	MRB	GPM	RRC	INCORP. NCR 86-60 REV 1 ADDED VALVE LEAKOFF SYMBOL TO CLARIFY CLASS BREAK FOR SB-V191 & SB-V4 PER UE&C P&ID 805004.
5	12/15/87	GPM	DWS	PAG	REV'D PIPING PER ERECTION ISO. NOTES, RENUMBERED NOTES, TRANSFERED TECH. NOTES TO GENERAL NOTES ON DWG RC-20848. ADDED: GENERAL NOTE NO'S, DETAIL LETTER DESIGNATION FOR FLOW RESTRICTOR, CONT COORD. DELETED: DUPLICATED PIPING & INFO. OF ASSOC. SYS'S, FLEX HOSES, REDUNDANT CL BOUNDARY & NOTES.
4	3/10/87	GPM	DWS	VWS	DELETED YT742A & B AND NOTE 5, ADDED YE6810A, B & C, YT6814A & B PER DRAWING 9763-M-506309
3	3/10/87	JDM	OPO	VWS	INCORP DCR 87-0074
2	10/17/86	PAL	BCL	RRC	ADDED 3/4" DIM TO ROOT VLV LINES. CORRECTED TUBING LINE SIZE TO 1/2" WAS 3/4", DELETED REF DWGS N/A REVISED TO CLARIFY DUPLICATIONS OF ASSOC SYS. ADDED NCR 86/60A TO INCOMP ITEMS LIST. MS-V296 WAS V295 PER UE&C P&ID ADDED REF LOCA COORD. RELOCATED MS-V19 & MS-V20 IN ERROR ADDED NOTE 12
1	3/21/86	TAK	DWS	WFD	ISSUED FOR OPERATIONS
0	7/16/85	GFS	TAK	WFD	ISSUED FOR FIELD VERIFICATION

REF. DRAWING NO.	REV	TITLE
9763-F-805011	19	CHEMICAL VOLUME CONTROL SYS. PURIFICATION
9763-F-805010	18	SAFETY INJECTION SYS. HIGH HEAD
9763-F-805009	13	SAFETY INJECTION SYS. ACCUMULATORS
9763-F-805008	17	RESIDUAL HEAT REMOVAL SYS.
9763-F-805007	14	REACTOR COOLANT SYS. PRESSURIZER
9763-F-805004	16	REACTOR COOLANT SYS. LOOP NO. 2
9763-F-805002	13	REACTOR COOLANT SYS. REACTOR VESSEL

FPL ENERGY Seabrook Station

REACTOR COOLANT SYSTEM
LOOP NO. 2

PID- 1-RC-B20842

PID- 1-RC-B20843

RC-E-11C
STEAM GENERATOR
SAFETY CLASS 1 & 2

RC-P-1C
REACTOR COOLANT PUMP
SAFETY CLASS 1

HOT LEG
29" I.D.

COLD LEG
27.5" I.D.

CROSSOVER LEG
31" I.D.

FOR P&ID REFERENCE DRAWINGS, SYMBOLS AND ABBREVIATIONS REFER TO DRAWINGS P&ID - LEGEND 1 AND P&ID - LEGEND 2

NOTES:

1. ⬡ INDICATES GENERAL NOTE NUMBER - REFER TO DRAWING 20848 FOR GENERAL NOTES.
2. WORK THIS DRAWING WITH DRAWINGS 20840, 20841, 20842, AND 20844 THROUGH 20846 AND 20848.
3. ALL LINES, EQUIPMENT, COMPONENTS, AND INSTRUMENTATION HAVE SYSTEM PREFIX RC UNLESS OTHERWISE NOTED.
4. VENTS, DRAINS & TEST CONN. CODE BREAKS ARE AT THE DOWNSTREAM END OF THE OUTER ISOLATION VALVE PER 1-NHY-005111 UNLESS NOTED OTHERWISE.
5. △ INDICATES REVISION LEVEL.
6. VALVE STEM LEAK-OFF ISOLATION VALVES V392, V394, V395, V396, V398, V401 & V402 ARE TO BE MAINTAINED CLOSED. VALVE STEM LEAK-OFF TO TO BE CONSIDERED INOPERABLE.
7. THE STEAM GENERATOR SHELL SIDE IS ANS SAFETY CLASS 2 AND WAS MANUFACTURED AS ASME CODE CLASS 1.

CR 86-10182 (18)

PORTIONS OF THIS DRAWING ARE
NUCLEAR SAFETY RELATED

REV	DATE	DSGN	CHKD	CE	DESCRIPTION
15	2-23-07	BCS	JWL	RBB	INCORP. CR 86-10182 REV.0
14	7/3/98	MPW	DWS	DJM	INCORP DCR 91-46 DCN 00
13	7/22/94	BCL	DWS	JMCC	INCORP DCR 94-14 CA*0
12	11-3-92	DWS	BCL	ES	INCORP DCR 90-3 CA*0 & 90-40 CA*0
11	4-21-92	MRB	BCL	JEV	INCORP. MMOD 91-515 CA0
10	9/24/91	MRB	GPM	WFD	INCORP. MMOD 91-582 CA26
9	10/10/90	MRB	JM	RSG	RE-INCORP ECA 05/1033868

REF. DRAWING NO.	REV	TITLE
9763-F-805011	19	CHEMICAL VOLUME CONTROL SYS. PURIFICATION P&ID
9763-F-805010	18	SAFETY INJECTION SYS. HIGH HEAD P&ID
9763-F-805009	13	SAFETY INJECTION SYS. ACCUMULATORS P&ID
9763-F-805008	17	RESIDUAL HEAT REMOVAL SYS. P&ID
9763-F-805007	14	REACTOR COOLANT SYS. PRESSURIZER P&ID
9763-F-805005	15	REACTOR COOLANT SYS. LOOP NO. 3 P&ID
9763-F-805002	13	REACTOR COOLANT SYS. REACTOR VESSEL P&ID

FPL ENERGY Seabrook Station

REACTOR COOLANT SYSTEM
LOOP NO. 3

PID- 1-RC-B20843

02/22/07

PID- 1-RC-B20844

RC-E-11D
STEAM GENERATOR
SAFETY CLASS 1 & 2
SEE NOTE 7
CR 86-18182

RC-P-1D
REACTOR COOLANT PUMP

HOT LEG
29" I.D.

CROSSOVER LEG
31" I.D.

COLD LEG
27.5" I.D.

FOR P&ID REFERENCE DRAWINGS, SYMBOLS AND ABBREVIATIONS
REFER TO DRAWINGS P&ID - LEGEND 1 AND P&ID - LEGEND 2

NOTES:
1. ⬡ INDICATES GENERAL NOTE NUMBER - REFER TO DRAWING 28848 FOR GENERAL NOTES.
2. WORK THIS DRAWING WITH DRAWINGS 28848 THROUGH 28843 AND 28845 THROUGH 28848 & 28848.
3. ALL LINES, EQUIPMENT, COMPONENTS, AND INSTRUMENTATION HAVE SYSTEM PREFIX RC UNLESS OTHERWISE NOTED.
4. VENT, DRAIN AND TEST CONN. CODE BREAKS ARE AT THE DOWNSTREAM END OF THE OUTER ISOLATION VALVE PER 1-NHY-6851II UNLESS NOTED OTHERWISE.
5. △ - INDICATES REVISION LEVEL.
6. VALVE STEM LEAK-OFF ISOLATION VALVES V428 & V431 ARE TO BE MAINTAINED CLOSED. VALVE STEM LEAK-OFF TO BE CONSIDERED INOPERABLE.
7. THE STEAM GENERATOR SHELL SIDE IS ANS CLASS 2 AND WAS MANUFACTURED AS ASME CODE CLASS 1.
CR 86-18182 △

PORTIONS OF THIS DRAWING ARE
NUCLEAR SAFETY RELATED

REV	DATE	DSGN	CHKD	CE	DESCRIPTION
18	2-23-97	BCS	JJH	reg.	INCORP CR 86-18182 REV. 0
17	2/2/96	MPW	DWS	DJH	INCORP DCR 91-46 DCN 80
16	02/28/97	MPW	BCS	YWS	INCORP MMOD 96-558 DCN 81
15	2/22/95	MPW	BCS	DMQ	INCORP DCR 95-23 CAP 8 ,3 & 11
14	7/22/94	BCL	DWS	JHOC	INCORP DCR 940814 CAP8
13	11/3/92	DWS	BCL	ES	INCORP DCR 920803 CAP8
12	4-28-92	MRB	DWS	RRB	INCORP. MMOD 91-515 CA8
11	9/21/91	MRB	GPM	WFD	INCORP. MMOD 91-562 CA28
10	9/5/91	GPM	FCB	IW	INCORP. DCR 86-234 CA81

REF. DRAWING NO.	REV	TITLE
9763-F-885811	18	CHEMICAL VOLUME CONTROL SYS PURIFICATION P&ID
9763-F-885810	17	SAFETY INJECTION SYS HIGH HEAD P&ID
9763-F-885809	12	SAFETY INJECTION SYS ACCUMULATORS P&ID
9763-F-885808	15	RESIDUAL HEAT REMOVAL SYS. P&ID
9763-F-885807	13	REACTOR COOLANT SYS PRESSURIZER P&ID
9763-F-885806	17	REACTOR COOLANT SYS LOOP NO 4 P&ID
9763-F-885802	12	REACTOR COOLANT SYS REACTOR VESSEL P&ID

FPL ENERGY Seabrook Station

REACTOR COOLANT SYSTEM
LOOP NO. 4

PID- 1-RC-B20844

02/22/97

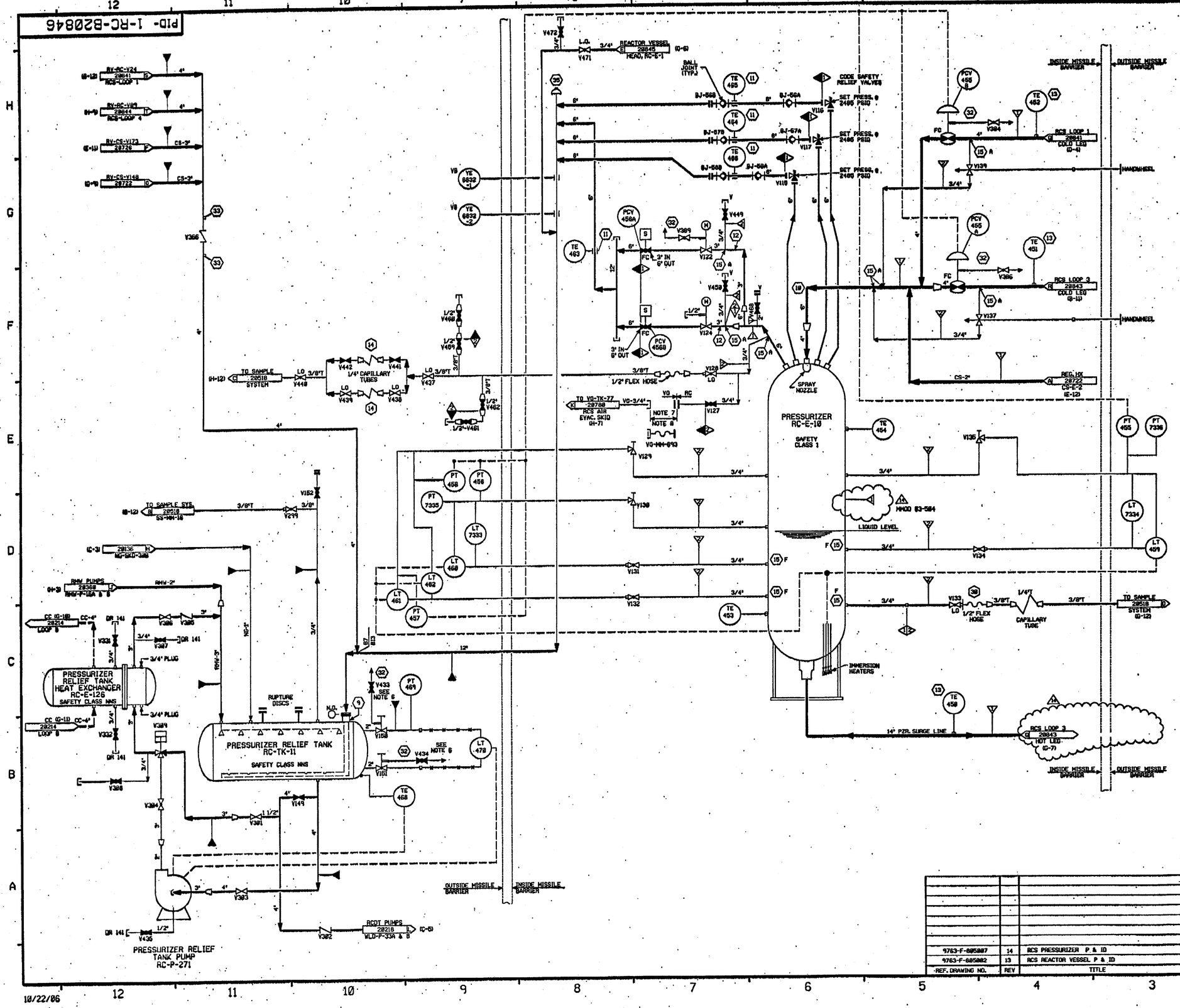

FOR P&ID REFERENCE DRAWINGS, SYMBOLS AND ABBREVIATIONS REFER TO DRAWINGS P&ID - LEGEND 1 AND P&ID - LEGEND 2

NOTES:

1. ⬡ INDICATES GENERAL NOTE NUMBER. REFER TO DRAWING 20848 FOR GENERAL NOTES.
2. WORK THIS DRAWING WITH DRAWINGS 20848 THRU 20845 & 20848.
3. ALL LINES, EQUIPMENT, COMPONENTS AND INSTRUMENTS HAVE SYSTEM PREFIX RC, UNLESS NOTED OTHERWISE.
4. VENT, DRAIN & TEST CONN. CODE BREAKS ARE AT THE DOWNSTREAM END OF THE OUTER ISOLATION VALVE PER 1-NHY-005111 UNLESS NOTED OTHERWISE.
5. △ INDICATES REVISION LEVEL.
6. VALVE STEM LEAK-OFF ISOLATION VALVES V433 & V434 ARE TO BE MAINTAINED CLOSED. VALVE STEM LEAK-OFF TO BE CONSIDERED INOPERABLE.
7. TYGON TUBING (REINFORCED POLYURETHANE "UREBRADE") TUBING TO BE INSTALLED WHEN REQUIRED DURING SHUTDOWN MODE FOR VENTING RC SYSTEM.
8. DURING PRE-OUTAGE PRESSURIZER PURGING, A TEMPORARY SPOOL PIECE, TAG 1-VG-HM-9500, (3/4" SS BRAIDED HOSE WITH A ROTOMETER) TO BE INSTALLED. TEMPORARY SPOOL PIECE WILL BE REMOVED FOLLOWING COMPLETION OF PURGING ACTIVITIES (DCR 97-16).

PORTIONS OF THIS DRAWING ARE

NUCLEAR SAFETY RELATED

REV	DATE	DSGN	CHKD	CE	DESCRIPTION
14	10/20/02	BCS	JM	JC	INCORP. MMOD 03-584 DCN- 00, CORRECT CONTINUATION
13	5/12/02	MPW	JM	RRB	INCORP. DCR 02-002 DCN 00
12	12/18/97	BCS	DWS	ETM	INCORP. DCR 97-16 DCN 00, 04
11	6/13/97	DWS	MPW	DMQ	INCORP DCR 970008 CN*00
10	5/20/97	MPW	DWS	RRB	INCORP. DCR 96-06 CA0
9	5/14/97	MPW	DWS	WFZ	PARTIAL INCORP. DCR 97-16 CA0
8	12/18/91	RMC	FCB	BCL	INCORP. MMOD 91-511 CA01
7	9/24/91	MRB	JM	WLD	INCORP. MMOD 91-582 CA0
6	8/26/91	MRB	FCB	IW	INCORP. ECA 05/8050608
5	12/20/89	MRB	CCM	MAC	INCORPORATED DCR 86-116 CA 6 MMOD 89-599 CA0
4	12/13/88	MRB	GPM	MJY	INCORPORATED DRR 88-28 REV 0
3	12/15/87	GPM	DWS	PAG	REVISED: NOTE 1, 2 AND 4, EQUIP. CL. PER UE&C P&ID. ADDED: DETAIL LETTER DESIGNATION FOR FLOW RESTRICTOR, CONT. COORDS, P&ID REF NOTE DELETED: DUPLICATED INFO OF ASSOC. SYS'S.; FLEX HOSES.
2	11/6/86	JDM	PAL	RRC	REMOVED PIPE SPEC BREAKS, INCORP ECA 19/1185308
1	9/26/86	PAL	BCL	RRC	INCORP. ECA 19/118341A REV. LEAKOFF CONFIG. FOR VLVS. V122,V124,V150,V151, PCV-455A,PCV-455B-LT-7334,PT-456,PT-7335,ARE LOCALLY MNTD.REMOVED NON-APPLICABLE REF.DWGS.ADDED NOTE 5 AND SYSTEM PREFIX FOR "RC" INSTRUMENTS INCORP. ECA 8/11113A & 8/802441A
0	6/27/86	TAK	DWS	WFD	ISSUED FOR OPERATIONS

REF. DRAWING NO.	REV	TITLE
9763-F-805007	14	RCS PRESSURIZER P & ID
9763-F-805002	13	RCS REACTOR VESSEL P & ID

FPL ENERGY Seabrook Station

REACTOR COOLANT SYSTEM
PRESSURIZER

PID- 1-RC-B20846

MAIN PLANT COMPUTER SYSTEM(MPCS)

DIGITAL ALARMS	ANALOG	ANALOG	DIGITAL ALARMS

VIA DUCT BANK BETWEEN PLANT & MET TOWER

MET TOWER INTERFACE BY YAEC

RC-TYY-466	P&ID RC-B20846
BLDG/EL: CTL./75'	INSTL.
LOC. F-500090	LOOP M-506641(RC SYS)
DESCRIPTION: PRZR RELIEF TEMP.	

D4319(2) HI

RC-TYY-465	P&ID RC-B20846
BLDG/EL: CTL/75'	INSTL.
LOC. F-500090	LOOP M-506641(RC SYS)
DESCRIPTION: PRZR RELIEF TEMP.	

D4318(2) HI

RC-TYY-464	P&ID RC-B20846
BLDG/EL: CTL/75'	INSTL.
LOC. F-500090	LOOP M-506641(RC SYS)
DESCRIPTION: PRZR RELIEF TEMP.	

D4317(1) HI

RC-LDY-470	P&ID RC-B20846
BLDG/EL: CTL/75'	INSTL.
LOC. F-500090	LOOP M-506643(RC SYS)
DESCRIPTION: PRZR RELIEF TANK LEVEL	

D4473(1) HI — A0847(1) LO,LO-LO,HI,HI-HI

CS-TYY-125	P&ID CS-B20722
BLDG/EL CTL./75'	INSTL.
LOC. F-500090	LOOP M506269 (CS SYS)
DESCRIPTION: LETDOWN LINE RELIEF DISCH TEMP.	

D4622(2) HI

RC-TYY-401	P&ID WLD-B20218
BLDG/EL: CTL/75'	INSTL.
LOC. F-500090	LOOP M-506621(RC SYS)
DESCRIPTION: REACTOR VESSEL FLANGE LEAK-OFF TEMP.	

D4320(1) HI

1/C 0/C

MM-UQY-5836	P&ID WLD-B20219
BLDG/EL. CTL./75'	INSTL.
LOC. F-500090	LOOP M-506951(WLD SYS)
DESCRIPTION: CONTN. BLDG. SUMP "A" LEVEL	

NONE — A1710(2)

LD LE 8332 CONTM. SUMP "A" EL.(-)30'-9" — LD LIT 8332 TRN. "A" ELEC. TUN. EL. 0'-0" (SEE NOTE 3)

MM-UQY-5836	P&ID WLD-B20219
BLDG/EL: CTL./75'	INSTL.
LOC. F-500090	LOOP M-506952 (WLD SYS)
DESCRIPTION: CONTN BLDG SUMP "B" LEVEL	

NONE — A1711(2)

LD LE 8333 CONTM. SUMP "B" EL.(-)27'-9½" — LD LIT 8333 TRN. "A" ELEC. TUN. EL. 0'-0"

CS-LS-181	P&ID RC-B20841
BLDG/EL CONTN/ 0'	INSTL.
LOC. F-500164	LOOP M-506280 (CS SYS)
DESCRIPTION: RCP-1A SEAL LEAK-OFF STANDPIPE LEVEL	

D4604(5)HI-HI
D4612(5) HI
D4613(5) LO
D4685(5)LO-LO

LD LE 8333-1 CONTM. SUMP "B" EL.(-)27'-9½" (SEE NOTE 4)

CS-LS-180	P&ID RC-B20842
BLDG/EL CONTN/ 0'	INSTL.
LOC. F-500165	LOOP M-506281 (CS SYS)
DESCRIPTION: RCP-1B SEAL LEAK-OFF STAND PIPE LEVEL	

D4686(5)HI-HI
D4614(5) HI
D4615(5) LO
D4687(5)LO-LO

CS-LS-179	P&ID RC-B20843
BLDG/EL CONTN/ 0'	INSTL.
LOC. F-500166	LOOP M-506282 (CS SYS)
DESCRIPTION: RCP-1C SEAL LEAK-OFF STAND PIPE LEVEL	

D4688(5)HI-HI
D4616(5) HI
D4617(5) LO
D4689(5)LO-LO

CS-LS-178	P&ID RC-B20844
BLDG/EL CONTN/ 0'	INSTL.
LOC. F-500167	LOOP M-506283 (CS SYS)
DESCRIPTION: RCP-1D SEAL LEAK-OFF STAND PIPE LEVEL	

D4690(5)HI-HI
D4618(5) HI
D4619(5) LO
D4691(5)LO-LO

CS-FT-194	P&ID RC-B20841
BLDG/EL CONTN/(-)26'	INSTL.
LOC. F-500160	LOOP 1-NHY-506280(CS SYS)
DESCRIPTION: RCP-1A SEAL #2 LEAKAGE FLOW	

NONE — A4250

CS-FT-193	P&ID RC-B20842
BLDG/EL CONTN/ 0'	INSTL.
LOC. F-500165	LOOP 1-NHY-506281 (CS SYS)
DESCRIPTION: RCP-1B SEAL #2 LEAKAGE FLOW	

NONE — A4249

CS-FT-192	P&ID RC-B20843
BLDG/EL CONTN/(-)26'	INSTL.
LOC. F-500162	LOOP 1-NHY-506282 (CS SYS)
DESCRIPTION: RCP-1C SEAL #2 LEAKAGE FLOW	

NONE — A4248

CS-FT-191	P&ID RC-B20844
BLDG/EL CONTN/(-)26'	INSTL.
LOC. F-500163	LOOP 1-NHY-506283 (CS SYS)
DESCRIPTION: RCP-1D SEAL #2 LEAK FLOW	

NONE — A4247

RC-TYY-463	P&ID RC-B20846
BLDG/EL: CTL/75'	INSTL.
LOC.	LOOP M-506641(RC SYS)
DESCRIPTION: PRZR. RC-E-10 RELIEF DISCH TEMP	

D4316(1) HI

SC-TY-9185-Q4	P&ID RC-B20845
BLDG/EL: ELEC TUNNEL/ 0'	INSTL.
LOC.	LOOP M-506621(RC SYS)
DESCRIPTION: REACTOR VESSEL RC-E-1 VENT TEMP	

A0984(5) NONE

RC-TDY/TYY-468	P&ID RC-B20846
BLDG/EL: CTL/75'	INSTL.
LOC.	LOOP M-506643(RC SYS)
DESCRIPTION: PRZR RELIEF TANK RC-TK-11 TEMP	

A0376(2) D4475(2) HI

WLD TYY-8343	P&ID WLD-B20218
BLDG/EL: WPB/ 25'	INSTL.
LOC. F-500312	LOOP M-506906(WLD SYS)
DESCRIPTION: OUTSIDE MISSILE BARRIER VALVE LEAK-OFF TEMP.	

D7804(7) HI

WLD-TYY-8348	P&ID WLD-B20218
BLDG/EL WPB/ 25'	INSTL.
LOC. F-500312	LOOP M-506906(WLD SYS)
DESCRIPTION: INSIDE MISSILE BARRIER VALVE LEAK-OFF TEMP.	

D7805(7) HI

WLD-LY-1403	P&ID WLD-B20218
BLDG/EL. WPB/ 25'	INSTL.
LOC. F-500312	LOOP M-506964(WLD SYS)
DESCRIPTION: REACTOR COOLANT DRAIN TANK LEVEL	

A3800(7) D5760(7) HI
D5761(7) LO

WLD-TY-1403-1	P&ID WLD-B20218
BLDG/EL. WPB/ 25'	INSTL.
LOC. F-500312	LOOP M-506964(WLD SYS)
DESCRIPTION: REACTOR COOLANT DRAIN TANK TEMP.	

A3801(7) NONE

D7800(3) ON — WLD-P-5A
D7801(3) ON — WLD-P-5B
D7802(3) ON — WLD-P-5C
D7803(3) ON — WLD-P-5D
LOGIC M-504071 M-504072 (WLD SYS)
DESCRIPTION: SUMP PUMP RUNNING

RADIATION DATA MANAGEMENT SYSTEM (RDMS) HOST CPTR

RM-RM-6505
RM-RM-6515
RM-RM-6516
RM-RM-6510
RM-RM-6511
RM-RM-6512
RM-RM-6513

REFER TO DWG. F-500015 FOR DESCRIPTION OF THESE INPUTS

REFER TO DWG F-500016 FOR DESCRIPTION OF THESE INPUTS

RM-RM-6526-1
RM-RM-6526-2
RM-RM-6548

NOTES:

1. ALL INSTRUMENTS ARE FOR UNIT 1 & 2.
2. THIS DWG. INCLUDES INSTRUMENTS FROM OTHER SYSTEMS USED FOR LEAK DETECTION.
3. CABLE REQUIREMENT BETWEEN LE & LIT IS (1) RG 59/U COAX & (1) 2/C #14 AWG(ONE CONDUCTOR OF 2/C CABLE USED FOR GROUND CONNECTION). MAX. CABLE LENGTH IS 250 FT.
4. LD-LE-8333-1 (IDENTICAL TO LD-LE-8333) TO BE INSTALLED SPARE. CABLING TO BE RUN FROM LE THROUGH PENETRATION AND COILED NEAR LD-LIT-8333.

REFERENCES:

M-5100000(SIS)
M-500006

SD-25
SD-26
SD-30
SD-32
SD-69
DBD-RM-01
SD-91
F-500037-2,3,4 & 5
M-510004
M-500376

REV	DATE	DRWN	CHKD	CE	LDE	DESCRIPTION
7	12/29/94	RMC	APL	JWC	CM	SUPERCEDES UE & C DWG 9703-F-500037-1 INCORP DCR 94-014 CA-03
6	2/8/94	HP	APL	RPN	B/B	INCORP DCR 89-46 CA-06
5	12/7/93		HP	APL	RPN	— — CM
4	7-19-93		A.M.			— —
3	11/17/92	DCN 65-00694				— —
2	7/14/92	DCN 65001614				— —
1	1/6/92	AND THIS SHT DELETED THIS SHT ADDED REF DWGS.				— —
0	6/4/91	FIRST ISSUE				— —

DATE	DESCRIPTION	PE	ENGR. GRP.	ENGD. BY	RES. ENG.	BDE	QAE	PEM

DISCIPLINE	CKD. BY	DATE
STRUCT.	N/A	—
MECH.	N/A	—
ELECT.		
NUCLEAR		7-9-91

DISCIPLINE	CKD. BY	DATE
INST. & CONTR.	AF	7/15/91
ELECT.	JKV	7/15/91
MECH. SVCS.	RD	7/15/91

LEAK DETECTION SYSTEM
INSTRUMENTATION ENGINEERING DIAGRAM

North Atlantic Energy Service Corporation — Seabrook Station

1-NHY-500037-1

BARCLAY BROTHERS, INC.

CONTAINMENT BLDG.

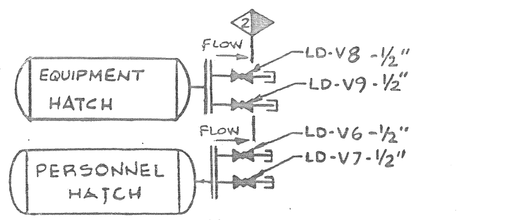

MAIN PLANT COMPUTER SYSTEM (MPCS)			
DIGITAL ALARMS	ANALOG	ANALOG	DIGITAL ALARMS
		A1731 (5)	NONE
		A1732 (5)	NONE
NONE	SEE NOTE 5	A1733 (5)	NONE
NONE	A1716 (5)	A1734 (5)	NONE
NONE	A1717 (5)	A1735 (5)	NONE
NONE	A1718 (5)	A1736 (5)	NONE
NONE	A1719 (5)	A1737 (5)	NONE
NONE	A1720 (5)	A1738 (5)	NONE
NONE	A1721 (5)	A1739 (5)	NONE
NONE	A1722 (5)	A1746 (5)	NONE
NONE	A1723 (5)	A1747 (5)	NONE
NONE	A1724 (5)	SPARE	NONE
NONE	A1725 (5)	SPARE	NONE
NONE	A1726 (5)	SPARE	NONE
NONE	A1727 (5)	SPARE	NONE
NONE	A1728 (5)	SPARE	NONE
NONE	A1729 (5)	SPARE	NONE
NONE	A1730 (5)		

LD TE 6420 — SC TY 2758-A1 CP-218
LD TE 6421 — SC TY 2758-A2 CP-218
LD TE 6422 — SC TY 2758-A3 CP-218
LD TE 6423 — SC TY 2758-A4 CP-218
LD TE 6424 — SC TY 2758-B1 CP-218
LD TE 6425 — SC TY 2758-B2 CP-218
LD TE 6426 — SC TY 2758-B3 CP-218
LD TE 6427 — SC TY 2758-B4 CP-218
LD TE 6428 — SC TY 2758-C1 CP-218
LD TE 6429 — SC TY 2758-C2 CP-218
LD TE 6430 — SC TY 2758-C3 CP-218
LD TE 6431 — SC TY 2758-C4 CP-218
LD TE 6432 — SC TY 2758-D1 CP-218
LD TE 6433 — SC TY 2758-D2 CP-218
LD TE 6434 — SC TY 2758-D3 CP-218

NOTE 3 DRY BULB (AMBIENT) TEMP. (RTD)

CONTAINMENT BLDG.

SC TY 2758-D4 CP-218 — LD TE 6435
SC TY 2758-E1 CP-218 — LD TE 6436
SC TY 2758-E2 CP-218 — LD TE 6437
SC TY 2758-E3 CP-218 — LD TE 6438
SC TY 2758-E4 CP-218 — LD TE 6439
SC TY 2758-F1 CP-218 — LD TE 6440
SC TY 2758-F2 CP-218 — LD TE 6441
SC TY 2758-F3 CP-218 — LD TE 6442
SC TY 2758-F4 CP-218 — LD TE 6443
SC TY 2758-G1 CP-218 — LD TE 6448
SC TY 2758-G2 CP-218 — LD TE 6449
LD ME 6413
LD ME 6414
LD ME 6415
LD ME 6416
LD ME 6417
LD ME 6418

DRY BULB (AMBIENT) TEMP. (RTD)
NOTE 3
DEW POINT SENSORS
NOTE 4

Non-Functional Abandoned in place

NOTES:

1. ALL INSTRUMENTS ARE FOR UNITS 1 & 2.
2. LEAK DETECTION INSTRUMENTS PREFIX "LD".
3. CABLE FROM EACH TE OR ME TO THE CORRESPONDING TY OR MT TO BE 16 AWG TWISTED SHIELD TRIAD. BOTH ELEMENTS OF EACH DUAL ELEMENT RTD TO BE WIRED THRU PENETRATIONS.
4. CABLE FROM MQX TO (6) ME'S TO BE (6) 16 AWG TWISTED SHIELDED PAIR.
5. COMPUTER INPUT IS 5½ DIGIT BCD TRANSMITTED FROM EITHER PIT. FIELD WIRING IS TO TERMINAL BLOCKS AT CP-405 AND MAY BE MANUALLY SWITCHED BETWEEN PIT'S BY SWITCHING CABLE PLUGS AT CP-405. CABLE REQUIREMENT IS ONE CABLE W/16 TWISTED PAIRS (16 AWG) W/OVERALL SHIELD. MAXIMUM CABLE LENGTH IS 1000 FT. THE 21 CUSTOM INPUTS (LOGIC LEVEL) ARE DESIGNATED D5703 THRU D5723. CUSTOM INPUT CARDS @ IRTU 5 MUST PROVIDE A MINIMUM OF 17 BITS OF DATA.
6. DELETED
7. DELETED
8. NORMALLY LOCKED CLOSE ISOLATION VALVES TO BE LOCATED AS CLOSE TO CONTAINMENT AS POSSIBLE, WITHIN 10 FEET.

REFERENCES:

510000 (515)
500006
500037-1,3 & 4
SD 91

510004

REV	DATE	DRWN	CHKD	QE	LDE	DESCRIPTION
7	10/8/97	–	RAC	CAT	EAM	INCORP DCR 95-096 DCN 02 PENS X-72675 NOT USED FOR LD EDITORIAL ONLY REF 8055176 INCORP ECA 05/109: 18 & 3 INCORP ECA 98/118-F-C 9763-F-500037-1
6	4/15/93	–	SM	AR		SUPERCEDES UE&C DWG

LEAK DETECTION SYSTEM

INSTRUMENTATION ENGINEERING DIAGRAM

North Atlantic Energy Service Corporation — Seabrook Station

1-NHY-500037-2

4 3 2 1

D C B A

BARCLAY BROTHERS, INC.

DWG. TRANSFERRED TO CUSTODY OF NHY AT REV. 9
LTR. SBU #A0729 DTD. 10-21-86

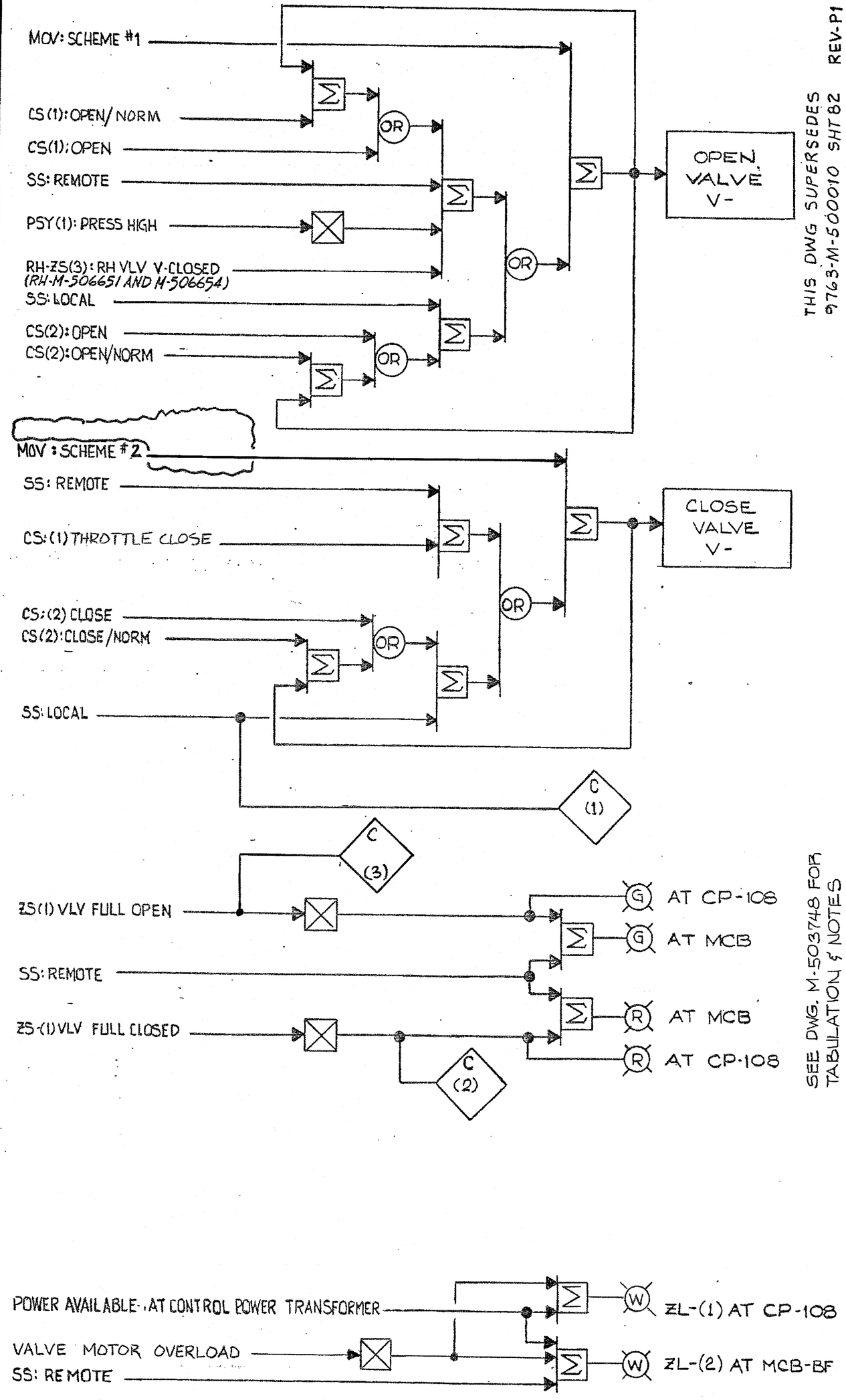

THIS DWG SUPERSEDES 9763-M-500010 SHT 82 REV-P1

SEE DWG. M-503748 FOR TABULATION & NOTES

NUCLEAR SAFETY RELATED

RC-ISOLATION VALVES LOGIC DIAGRAM

New Hampshire Yankee Seabrook Station

1-NHY-503747 REV 15

ISSUED-FOR-CONSTRUCTION

REV	DATE	DRWN	CHKD	CE	LDE	DESCRIPTION
15	9/21/99	MRJ	JWB	RPN	RWM	INCORP DCR 97-21 DCN-15
14	9/23/98	JWB	MRB	JWR	CM	PART OP. DCR 97-21 DCN-13
13	6-12-97	MRB	JWB	JPS	RWM	PARTIAL INCORP. DCR 97-21, DCN-0
12	6-5-97	MRB	JWB	JPS	JPS	INCORP. DCR 97-021, DCN 00
11	8/29/91	MRB MLL	GPM	APL	RPN	INCORP.: DCR 89-24, CA-DCR 86-239, CA-1
10	3/26/87	BCE	KK	TPN	[illegible]	ECA 05/118202B 9763-M-503747 AND SUPERCEDES UE&C DWG. 5

1-NHY-503747 REV 15

DWG. TRANSFERRED TO CUSTODY OF NHY AT REV. 6
LTR. SEU#A0729 DTD. 10-21-86

CONTINUED FROM DWG M-503747

THIS DWG SUPERSEDES 9763-M-500010 SH 83 REV P1

NUCLEAR SAFETY RELATED

RC-ISOLATION VALVES LOGIC DIAGRAM

New Hampshire Yankee — Seabrook Station

1-NHY- 503748 REV 10

TRAIN	VALVE No. V-	CS (1) / CS (2)	ZL-(2)	ZL-(1) / SS-	PSY-(1) / PSY-(2)	RH-ZS (3) / RH-V	ZS-(1)	F.P. 30001 SHT-		COMPUTER ID/IRTU (1)	(2)	(3)
B	V22	7302-1		7302-1	403A	2465-B	7302B	370		D7442	D4446	D7467
		7302-2	7302-2	7302		V35				4	6	5
A	V23	7303-1		7303-1	405A	2465-A		369		D7440	D4447	D7469
		7303-2	7303-2	7303		V35				3	5	7
A	V88	7311-1		7311-1	405A	2466-A	7311A	371		D7441	D4449	D7464
		7311-2	7311-2	7311		V36				3	5	6
B	V87	7310-1		7310-1	403A	2466-B		372		D7443	D4448	D7468
		7310-2	7310-2	7310		V36				4	6	6

ISSUED-FOR-CONSTRUCTION

NOTES

1. FOR DESCRIPTION OF LOGIC SYMBOLS SEE M-503100.
2. ZS-(1) LIMIT SWITCH ARE MOUNTED INSIDE MOTOR.

REFERENCE DOCUMENTS

F.P Nº (SEE TABLE)
SD-NAH/NCH-281
M-506635
M-506636
M-503747
RH-M-506651
RH-M-506654
C-509036

(PART OF THIS DWG. WAS PART OF M-503747)

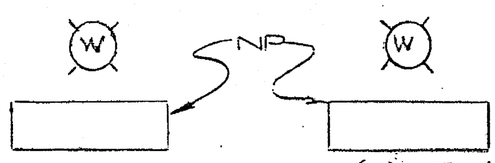

ZL-(1) AT CP- ZL-(2) AT MCB

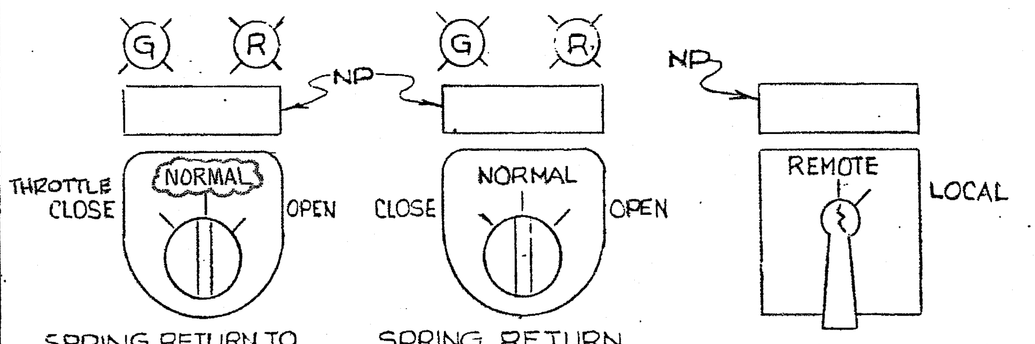

SPRING RETURN TO CENTER FROM OPEN
CS(1) AT MCB-BF

SPRING RETURN TO CENTER
CS(2) AT CP-

MAINTAINED POSITION KEY LOCK & REMOVABLE IN ANY POSITION.
SS-AT CP-

REV	DATE	DRWN	CHKD	CE	LDE	DESCRIPTION
10	6-5-97	MRB	JWB	JPS	JPS	INCORP. DCR 97-021, DCN 00
9	8/29/91	MLL	LMR	WHR	RPN	INCORP. DCR 86-239, CA-1
8	3/26/87	ACE	HK	TPN		INCORP. ECA 05/118202B 9763-M-503748 AND SUPERCEDES UE&C DWG.

REV NO	DATE	DESCRIPTION	PE	DWN BY	CKD BY	RES ENG	SDE
7	7/21/84	REV'D PER DCN C-300176A & EDITORIAL CHANGES	RPN	JT			RPN

1-NHY- 503748 REV 10

DWG. TRANSFERRED TO CUSTODY OF NHY AT REV. 6
LTR. SBU#10729 DTD. 10-21-86

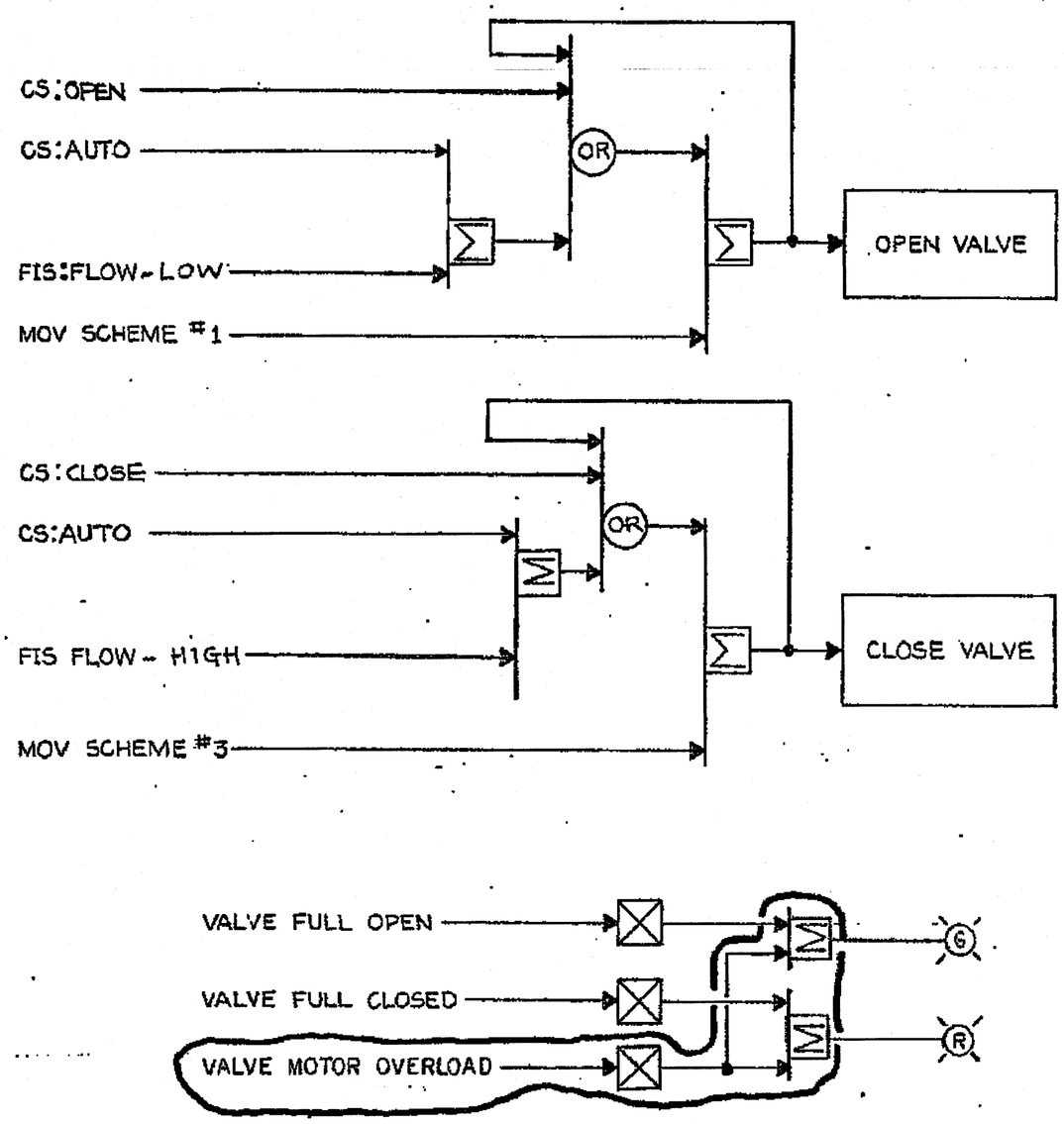

TRAIN	RH PUMP RECIRC. VLV FCV-		CS-	FIS-	LOGIC REF FP-30001 SH.
A	610		610	610	212
B	611		611	611	213

NUCLEAR SAFETY RELATED

RH PUMPS LOW FLOW RECIRC VLVS
LOGIC DIAGRAM

New Hampshire Yankee — Seabrook Station

1-NHY-503764

ISSUED-FOR-CONSTRUCTION

REV	DATE	DRWN	CHKD	CE	LDE	DESCRIPTION
6	2-28-85	SB-16055	RPN	EM	HK	LRV / RPN / - / -
5	11-15-80	DCN 03-0884A		JAW	[illegible]	JFB / RPN / - / -
4	2-14-80	REV'D REFERENCE		[illegible]	[illegible]	JFB / [illegible] / - / -
3	5-3-78	REV'D NOTE 1		ME	CE	[illegible] / [illegible] / - / -
9	[illegible]	HP	APL	CCM	JFB	DCR 86-403, CA-4, TRN 'B'
8	9/2/89	HP	APL	CCM	BEH	DCR 86-403, CA-0, TRN 'A'
7	3/25/87	RCE	HK	TPN	N/A	9763-M-503764 SUPERCEDES UE&C DWG;

NOTES

1-FOR DESCRIPTION OF LOGIC SYMBOLS SEE M-503100

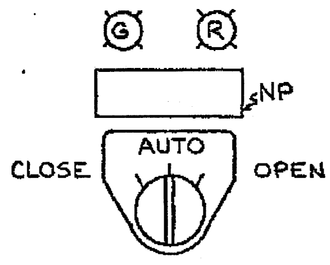

SPRING RETURN TO AUTO

CS AT MCB

REFERENCE DOCUMENTS

9763-M-506650
9763-F-805008
9763-M-506653
SD-NAH/NCH-283

1-NHY-503764

PID- 1-RH-B20660

20662
TRAIN A

20663
TRAIN B

LOOP #1

LOOP #2

LOOP #4

LOOP #3

V14

SI-P-6A & 6B 20445 SAFETY INJECTION PUMPS

FROM SI-TK-9A SI ACCUMULATOR A

FROM SI-TK-9B SI ACCUMULATOR B

RC-P-1A REACTOR COOLANT PUMP

RC-P-1B REACTOR COOLANT PUMP

RC-P-1D REACTOR COOLANT PUMP

RC-P-1C REACTOR COOLANT PUMP

RC-E-11A STEAM GENERATOR

RC-E-11B STEAM GENERATOR

RC-E-11D STEAM GENERATOR

RC-E-11C STEAM GENERATOR

RC-E-1 REACTOR VESSEL

TO SI-P-6A 20445 SI PUMP A SUCTION

V35

E-9A RHR LOOP A HEAT EXCHANGER

E-9B RHR LOOP B HEAT EXCHANGER

PRIMARY COMPONENT COOLING SYSTEM DWG. 20204

CHEM. & VOL. CONTROL SYS. 20720

REFUELING WTR STORAGE TK. 20233

HCV606

HCV607

P-8A RHR PUMP A

P-8B RHR PUMP B

FCV610

FCV611

FCV618

FCV619

RC-V23

RC-V22

RC-V88

RC-V87

TO LETDOWN HX 20720 CS-E-4

V22

V21

V26

TO CBS PUMPS 20233 CBS-P-9A & B

CONTAINMENT RECIRCULATION SUMP A DWG. 20233

CONTAINMENT RECIRCULATION SUMP B DWG. 20233

TO SI-P-6B 20445 SI PUMP B SUCTION

V36

REFUELING WTR. STORAGE TK. 20233

CHEM. & VOL. CONTROL SYS. 20720

FROM SI-TK-9D SI ACCUMULATOR D

FROM SI-TK-9C SI ACCUMULATOR C

INCOMPLETE ITEMS	
ITEM	NUMBER

NOTES:
1. WORK THIS DRAWING WITH DRAWINGS 20662 & 20663.
2. ALL LINES, EQUIPMENT, COMPONENTS AND INSTRUMENTS HAVE SYSTEM PREFIX RH, UNLESS NOTED OTHERWISE.
3. △ INDICATES REVISION LEVEL

PORTIONS OF THIS DRAWING ARE

NUCLEAR SAFETY RELATED

REF. DRAWING NO.	REV	TITLE
9763-F-805029	13	SAFETY INJECTION SYS. ACCUM. P&ID
9763-F-805010	18	SAFETY INJECTION SYS. HIGH HEAD P&ID
9763-F-805008	17	RESIDUAL HEAT REMOVAL SYS. P&ID

REV	DATE	DSGN	DRWN	CHKD	CE	LDE	DESCRIPTION
3	4/29/87	WDS	DWS	WRD	BCL	WWJ	REVISED PER LATEST SYSTEM DWGS AND ADDED NOTE 3.
2	1/28/86	DEE	SKN	DWS	WFD	EWD	ISSUED FOR OPERATIONS
1	4/19/85	DWS	GFS	TAK	PEF	WFD	GENERAL REVISION INCORP. ECA 99/1977B & 99/1974A.
0	11/09/84	DWS	MRB	RSL	PEF	PEF	ISSUED FOR FIELD VERIFICATION

PSNH PUBLIC SERVICE OF NEW HAMPSHIRE

SEABROOK STATION

RESIDUAL HEAT REMOVAL SYS. OVERVIEW

PID- 1-RH-B20660

10/17/84

PID- 1-RH-B20662

PIPE PENETRATION AREA & TUNNEL

CONTAINMENT BUILDING

INSIDE SHIELDING | OUTSIDE SHIELDING (M)-(B) VAULT No. 1

CVCS LETDOWN HT. EXCHANGER 28723 (A) CS-E-4 (E-9)

E-9B OUTLET (D-11) 28663 (C) V-19

E-9A RHR LOOP A HEAT EXCHANGER SAFETY CLASS 2 & 3

CCW LOOP A 28287 (D-11)

CCW LOOP A 28287 (D-18)

CROSS-TIE 28663 (B) RH-V22 (H-9)

SI RV HEADER 28446 (C-7)

V13 SET PRESS @ 600 P.S.I.G.

SI-P-6A SUCTION 28728 (A) (B-7)

(REF.) ELEV. (-)13' 8"

(REF.) ELEV. (-)354' 4" (REF.)

FD-DR 154 V81 V82 V83 V84 V85 V86 V87 V88

FD-DR 165 LOCAL SAMPLE

FD-DR 163

FD-DR 157

RH RECIRC. 28663 (A) V-17 (H-12)

FLUSHING CONN.

RC-V153

RC-V148

NOTE 7

RC 14" RC 16" RC 12"

CBS-TK-10A 28233 (A-11) CONT. RECIRC. SUMP

RWST 28233 (C) CBS-TK-8 CBS-V2 (B-11)

CBS 12"

RCS LOOP 1 28841 (A-12) HOT LEG

SI-TK-9B 28458 (A) (A-11) RCS LOOP 1 COLD LEG INJ.

SI-TK-9B 28458 (B) (B-11) RCS LOOP 2 COLD LEG INJ.

SI-P-6A & B 28446 (D-4)

RC FILTER 28723 (B) CS-F-2 (B-3)

RHR PUMP B 28663 (B) P-8B (B-7)

CR 85-11638 (A)

TO VALVE SEAT LEAKAGE DETECTION PIPING

DETAIL A

FLEXIBLE HOSE OR TUBING LOOP (NOT SHOWN)

TYPICAL VALVE STEM LEAKOFF PIPING (SEE NOTE 6)

FOR P&ID REFERENCE DRAWINGS, SYMBOLS AND ABBREVIATIONS REFER TO DRAWINGS P&ID - LEGEND 1 AND P&ID - LEGEND 2

1. FURTHER ENGINEERING EVALUATION TO EFFECT ECA 96-11518C.

NOTES:

1. WORK THIS DRAWING WITH DRAWINGS 28668 & 28663. PORTIONS OF THIS DRAWING ARE DUPLICATED ON DRAWING S1-28448 & S1-28449 DUE TO DUAL SYSTEM FABRICATION.
2. ALL LINES, VALVES, EQUIPMENT, COMPONENTS AND INSTRUMENTS HAVE SYSTEM PREFIX RH, UNLESS NOTED OTHERWISE.
3. DELETED.
4. ● INDICATES 3/8" FLOW RESTRICTOR INSTALLED. SEE APPLICABLE DETAIL ON DRAWING 1-RC-28648.
5. DELETED.
6. REFER TO DRAWING VSL-28774 FOR VALVE LEAKOFFS.
7. PERMANENT SPOOL PIECE INSTALLATION SHOWN TEMP. STRAINER IS USED IN PLACE OF SPOOL PIECE DURING INITIAL FLUSHING OPERATION. STRAINER TO BE REMOVED BEFORE START-UP.
8. INSTRUMENTATION
   - (B) INTERLOCKED WITH SI-V89, SI-V98, SI-V90 (DWG. 28448) CBS-V8 (DWG. 28233) RC-V22, & RC-V23 (DWG. 28841)
9. VENTS, DRAINS, TEST CONN. & ORIFICE TAP PIPING CODE BREAKS ARE AT THE DOWNSTREAM END OF THE OUTER ISOLATION VALVE PER 1-MNT-B86111, UNLESS NOTED OTHERWISE.
10. DELETED.
11. DELETED.
12. △ - INDICATES REVISION LEVEL.
13. DELETED
14. DELETED
15. HANDJACK HANDWHEEL LOCKED OPEN EXCEPT DURING MIDLOOP.

PORTIONS OF THIS DRAWING ARE

NUCLEAR SAFETY RELATED

REV	DATE	DSGN	CHKD	SES	DESCRIPTION
20	11-8-00	BCS	MK	WAB	INCORP. CR 85-11638
19	11/7/00	BCS	MPW	RRB	INCORP. DCR 98852 DCN-00
18	9/15/00	BCS	MRB	RWM	INCORP. DCR 99-8836 DCN-00
17	2/25/00	BCS	DWS	MAP	INCORP. MMOD 990611 DCN-00
16	11/2/99	DWS	MPW	VWS	INCORP. MMOD 990624 DCN-00
15	6/18/95	BCL	DWS	JMC	INCORP. DCR 85-54 CA-9
14	5/27/94	BCL	DWS	DMD	INCORP. MMOD 94-558 CA82
13	3/25/92	BCL	MRB	GRM	INCORP. MMOD 92-552 CA8
12	10/5/92	MRB	DWS	DMP	INCORP. MMOD 92-586 CA8
11	6/17/92	MRB	DWS	RRB	INCORP. MMOD 91-515 CA8
10	1/18/90	GPM	PAL	RRC	INCORP. DCR 87-136 CA11, 89-13 CA83 AND DRAWING ENHANCEMENT
9	9/6/89	MRB	APL	WFD	INCORP. DCR 87-222 CA 86, DCR 89-13 CA 82 & DCR 88-32 CA 8
8	2/2/89	GPM	MRB	GRM	INCORPORATED DCR 87-274 CA8 REVISED VALVE V148 & OPERATOR SYMBOL PER LEGEND 2
7	10/30/87	GPM	DWS	PAC	INCORP. DCR 86-851 & DCR 87-349 REVISED PIPING TO REFLECT AS INSTALLED CONF. TO CLARIFY REDUNDANT SYS. DUPLICATION, CONT. DWG'S, NOTE 1, 4-A & ADDED DETAIL "A", NOTE FOR VALVE CS-V978, NEW FLOW RESTRICTOR INDICATOR SYM., OPEN ITEM HELD, DELETED NOTES 11, 13, 14 & 15, REF. DWGS, PIPING CODE BRK'S PER NOTE 9, INCOMPLETE ITEM, REDUNDANT PIPING, CONT. DWG'S & SHEET EL. BOUNDARY

FPL ENERGY Seabrook Station

RESIDUAL HEAT REMOVAL SYS. TRAIN A DETAIL

PID- 1-RH-B20662

REF. DRAWING NO.	REV	TITLE
9763-F-885088	17	RESIDUAL HEAT REMOVAL SYS.P&ID

11/07/05

PID- 1-RH-B20663

INSIDE SHIELDING | OUTSIDE SHIELDING | VAULT NO. 1 | PIPE PENETRATION AREA | CONTAINMENT BUILDING

VAULT NO. 2

E-9B RHR LOOP B HEAT EXCHANGER SAFETY CLASS 2 & 3

DETAIL "A"

FOR P&ID REFERENCE DRAWINGS, SYMBOLS AND ABBREVIATIONS REFER TO DRAWINGS P&ID - LEGEND 1 AND P&ID - LEGEND 2

◇1 FURTHER ENGINEERING EVALUATION TO EFFECT ECA 99115818C.

NOTES:

1. WORK THIS DRAWING WITH DRAWINGS 28658 & 28662, PORTIONS OF THIS DRAWING ARE DUPLICATED ON DRAWING SI-28446, SI-28448 & SI-28449 DUE TO DUAL SYSTEM FUNCTIONS.
2. ALL LINES, VALVES, EQUIPMENT, COMPONENTS AND INSTRUMENTS HAVE SYSTEM PREFIX RH, UNLESS NOTED OTHERWISE.
3. ● INDICATES 3/8" FLOW RESTRICTOR INSTALLED, SEE APPLICABLE DETAIL ON DRAWING RC-28048.
4. DELETED
5. REFER TO DRAWING VSL-28774 FOR VALVE LEAKOFFS.
6. PERMANENT SPOOL PIECE INSTALLATION SHOWN TEMP. STRAINER IS USED IN PLACE OF SPOOL PIECE DURING INITIAL FLUSHING OPERATION. STRAINER TO BE REMOVED BEFORE PLANT START-UP.
7. INSTRUMENTATION
   - (A) INTERLOCKED WITH SI-V87, SI-V98, SI-V93,(DWG. 28446) CSS-V14,(DWG. 28233 RC-V97, & RC-V88 (DWG. 28644).
8. VENTS, DRAINS, TEST CONN.'s & ORIFICE TAP PIPING CODE BREAKS ARE AT THE DOWNSTREAM END OF THE OUTER ISOLATION VALVE PER 1-NHY-8851H, UNLESS NOTED OTHERWISE.
9 - 11. DELETED
12. △ -INDICATES REVISION LEVEL.
13. DELETED
14. DELETED
15. ◇ INDICATES OPEN ITEM NUMBER.
16. HANDJACK HANDWHEEL, LOCKED OPEN EXCEPT DURING MIDLOOP.

PORTIONS OF THIS DRAWING ARE

NUCLEAR SAFETY RELATED

REV	DATE	DSGN	CHKD	SES	DESCRIPTION
17	4-8-05	JM	Bes	ERB	INCORP DCR 82-882 DCN 05 & CLOSED DRAIN VALVES
16	8/22/00	BCS	DWS	ARB	INCORP DCR 99-8836 DCN-00
15	4/7/00	DWS	BCS	MPW	INCORP MMOD 998831 DCM-00
14	9/21/99	DWS	MPW	VWS	REINCORP DCR 898813 CA#8B INCORP. MMOD 99-824 DCN-00
13	11/14/97	BCS	MPW	DMD	PARTIAL INCORP MMOD 91-555 CA8
12	11/27/95	BCL	MPW	DMD	INCORP DCR 95-53 CA8
11	4/18/95	DWS	JMDC	DMD	INCORP DCR 89-54 CA8
10	3/28/94	BCL	MRB	GPH	INCORP MMOD 92-552 CA8
9	10/5/92	MRB	DWS	DMP	INCORP MMOD 92-586 CA8
8	4/17/92	MRB	DWS	RRB	INCORP MMOD 91-515 CA8
7	11/11/89	MRB	RWL	GRH	INCORP DCN 87-422 CA 13, 89-13 CA 03, 88-32 CA8, 87-136 CA11, & 86-712 DRAWING ENHANCEMENTS
6	10/30/87	GPH	DWS	PWS	INCORPORATED DCR 87-299 REVISIONING TO REFLECT AS INSTALLED CONF. & TO CLARIFY REDUNDANT SYS. & DUPLICATION. DWG CONTS. NOTES 1-13 & 8 ADDED,DELETE NOTE FOR VLV CS-V82, & REV FLOW RESTRICTOR INDICATION STRL. ORIF. INFO. NOTE 15, & 16 ADDED. DETERMINATES 4,5,10,11 & 14. REF DWG'S. PIPING SPECS. ADDED NOTE 8,INCORP. ITEM MMS-1 CSS BOUNDARY
5	11/28/86	MRJ	WRD	RRC	REVISED RC-V154 TO BE SHOWN OPEN PER LOOP ECA 29662-3, INCOP MCR 82/8/86C, ADDED INCOMPLETE ITEM.
4	10/9/86	MRJ	MWP	RRC	ADDED ASME CLASS BREAKS AND PIPE LINE SIZES PER LEAC P&ID'S ADDED DRAIN INFO. PER ECA 99/115181C CONTINUATION FLAG REFS. ADDED ADDED REF DWGS. AND NOTE 14, DELETED NOTE 13
3	8-12-86	JDH	DWS	RRC	INCORP MCR 737/88/14 AND ECA 79 TO ADD ITEMS INCORP. ECA 99/115181A & 99/112913B
2	1/29/86	DEE	DWS	EWD	ADD RF/VALVE/DRS REVISED FOR OPERATIONS
1	4/19/85	DWS	TAK	WFD	UPDATED FORMAT & DWG REVISIONS INCORP. ECA 84/1977B & 84/1974A
0	11/29/84	DWS	RSL	PEF	ISSUED FOR FIELD VERIFICATION

FPL ENERGY Seabrook Station

RESIDUAL HEAT REMOVAL SYS. TRAIN B CROSS-TIE DETAIL

PID- 1-RH-B20663

REF. DRAWING NO.	REV	TITLE
9763-F-885088	17	RESIDUAL HEAT REMOVAL SYS. P&ID

04/07/05