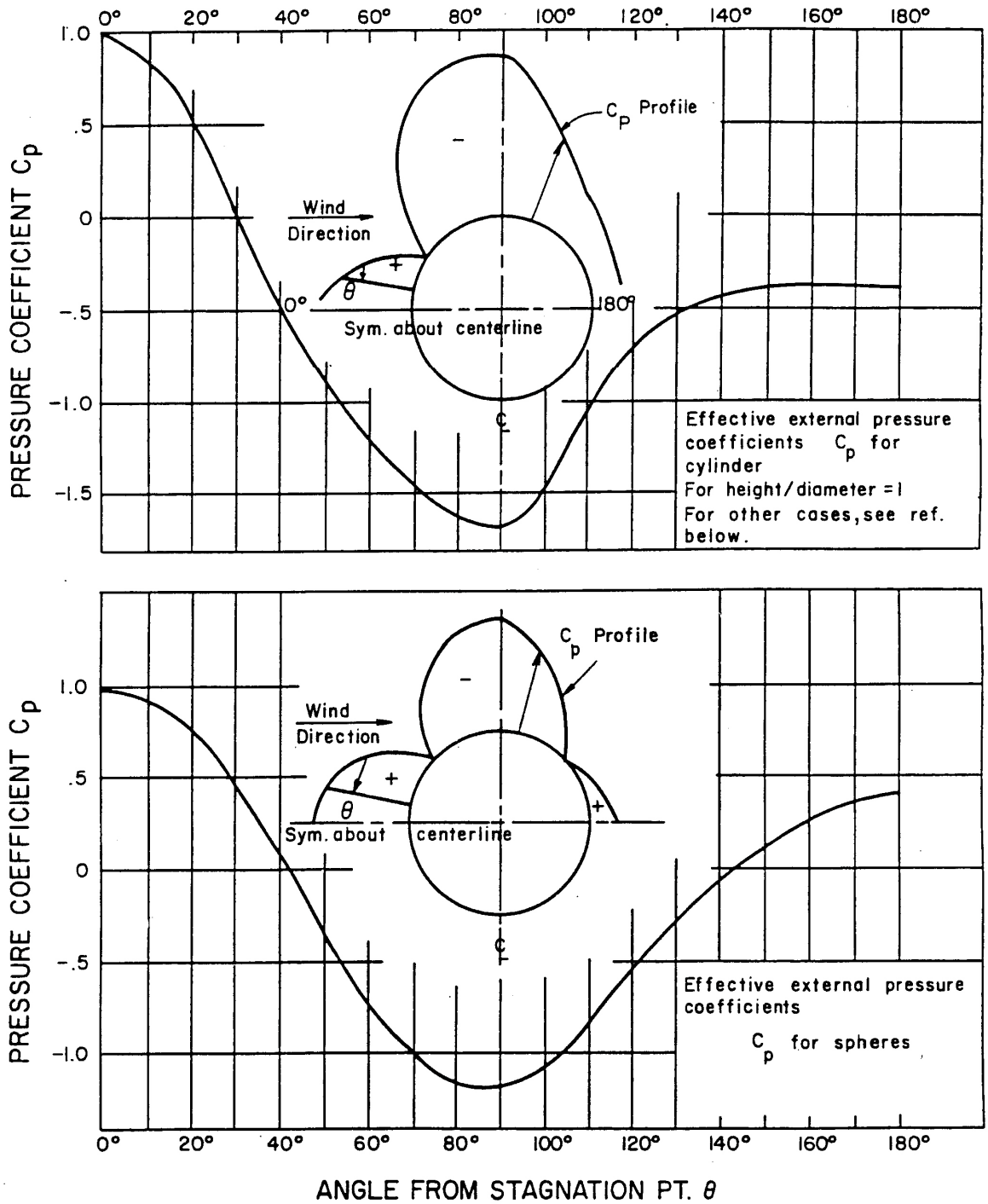

SEABROOK STATION UPDATED FINAL SAFETY ANALYSIS REPORT	Pressure Coefficients Distribution for Cylinders and Spheres	
		Figure 3.3-1

Size Factor C_S = Average Pressure/Max. Tornado Pressure

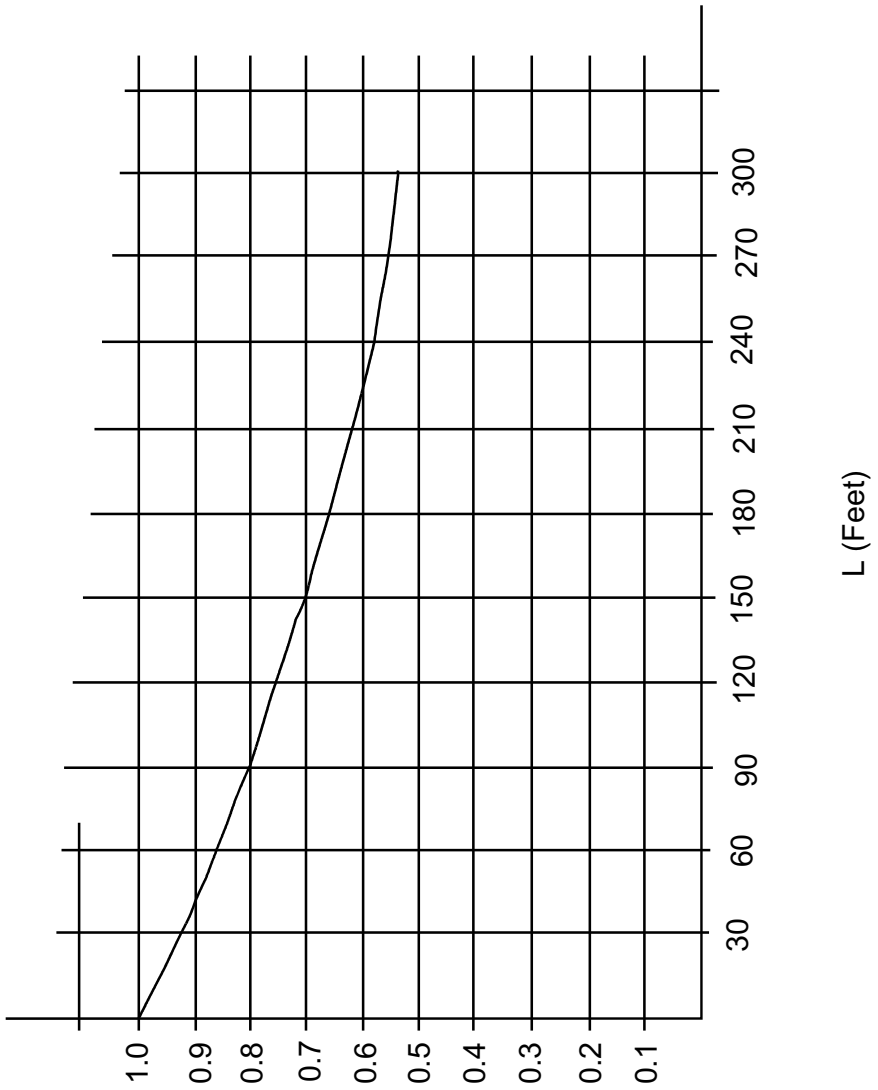

Size Factor C_S = Average Pressure/Max. Tornado Pressure

G:\Images_P\UFSAR\332.ds4

SEABROOK STATION UPDATED FINAL SAFETY ANALYSIS REPORT	Tornado Size Factor C_s Versus Building Length (L)	
		Figure 3.3-2

See 805067

See 202117

See 202118

See 101696

SEABROOK STATION UPDATED FINAL SAFETY ANALYSIS REPORT	Waterproofing Concrete Typical Details	
		Figure 3.4-1

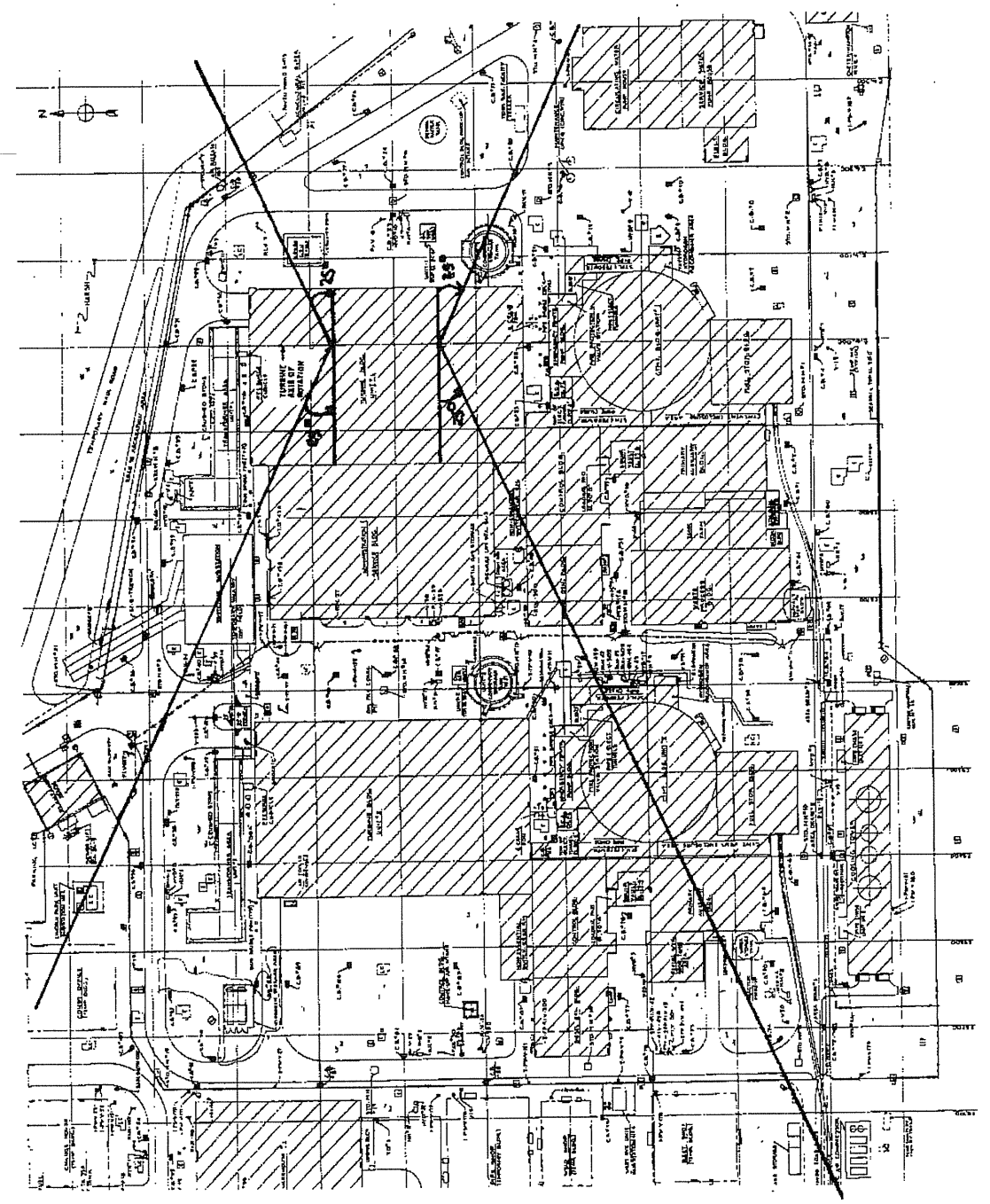

SEABROOK STATION UPDATED FINAL SAFETY ANALYSIS REPORT	Possible Turbine Missile Trajectory	
		Figure 3.5-1

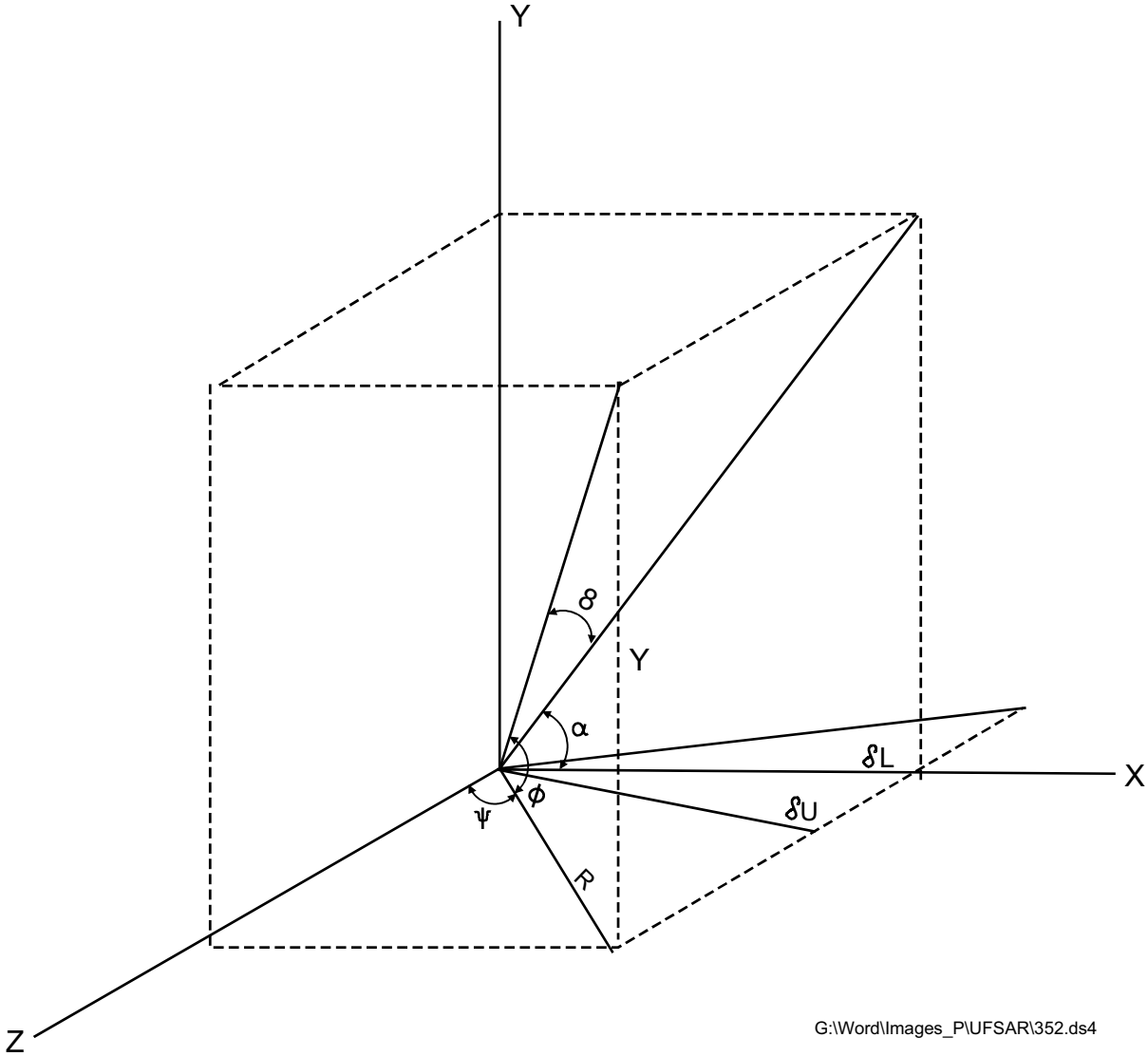

SEABROOK STATION UPDATED FINAL SAFETY ANALYSIS REPORT	Coordinate Systems	
		Figure 3.5-2

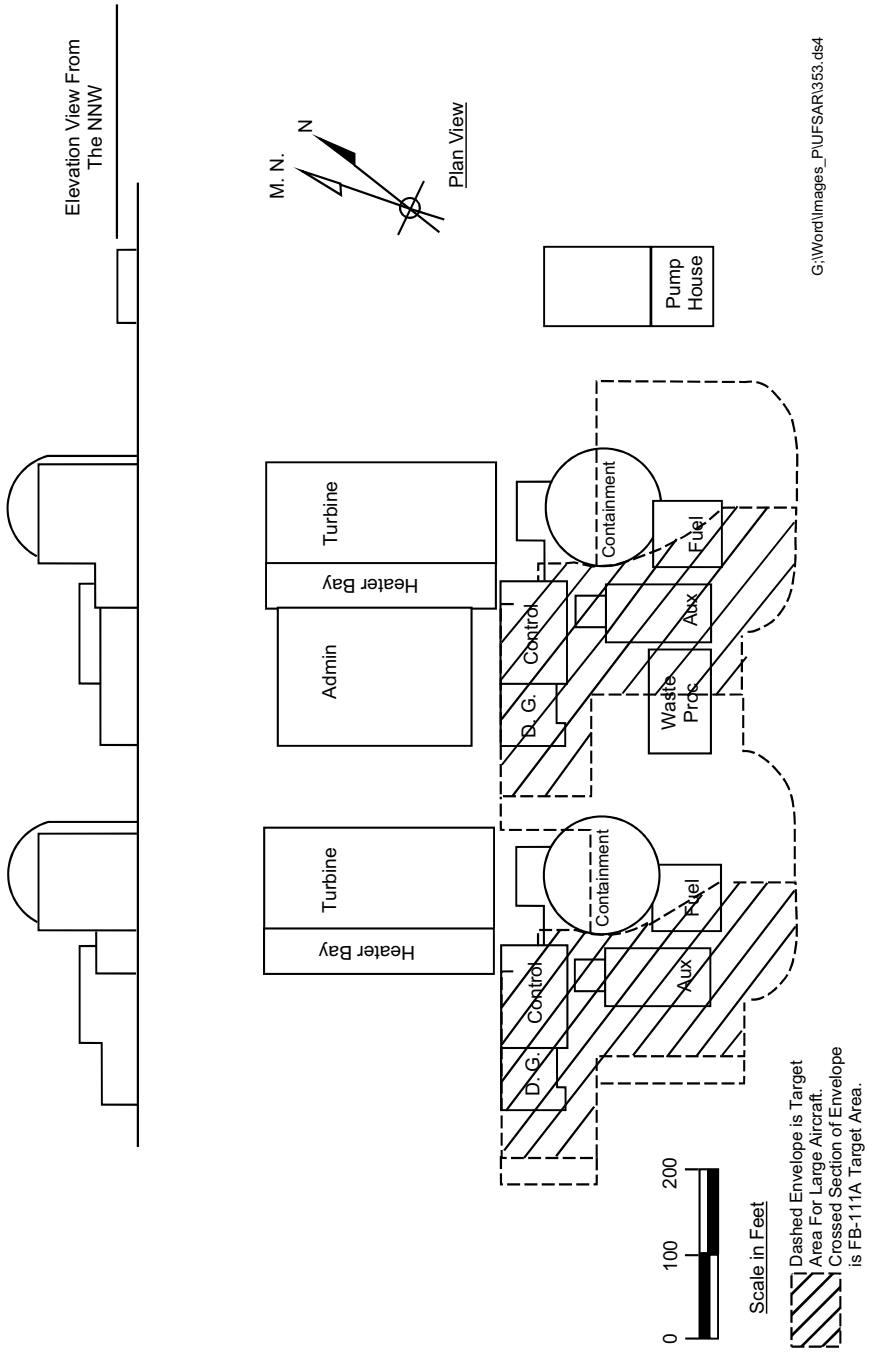

SEABROOK STATION UPDATED FINAL SAFETY ANALYSIS REPORT	Plot Plan and Elevation View Showing Effective Target Area	
		Figure 3.5-3

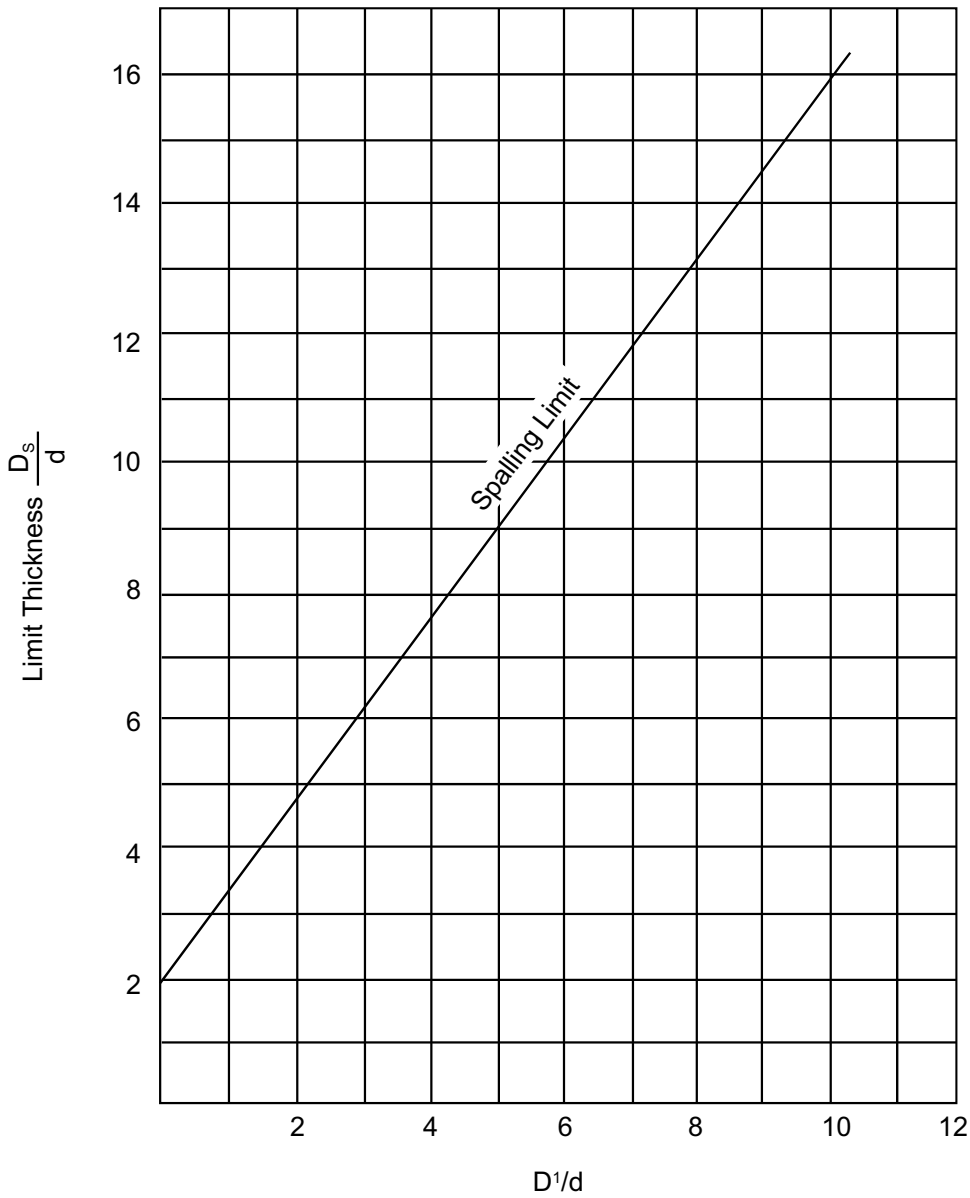

D^1 = Penetration
d = Diameter of Missle
D_S = Thickness required to Prevent Spalling

G:\Images_P\UFSAR\354.ds4

SEABROOK STATION UPDATED FINAL SAFETY ANALYSIS REPORT	Relationship of Penetration to Scabbing Limit Thickness (Reference 12)	
		Figure 3.5-4

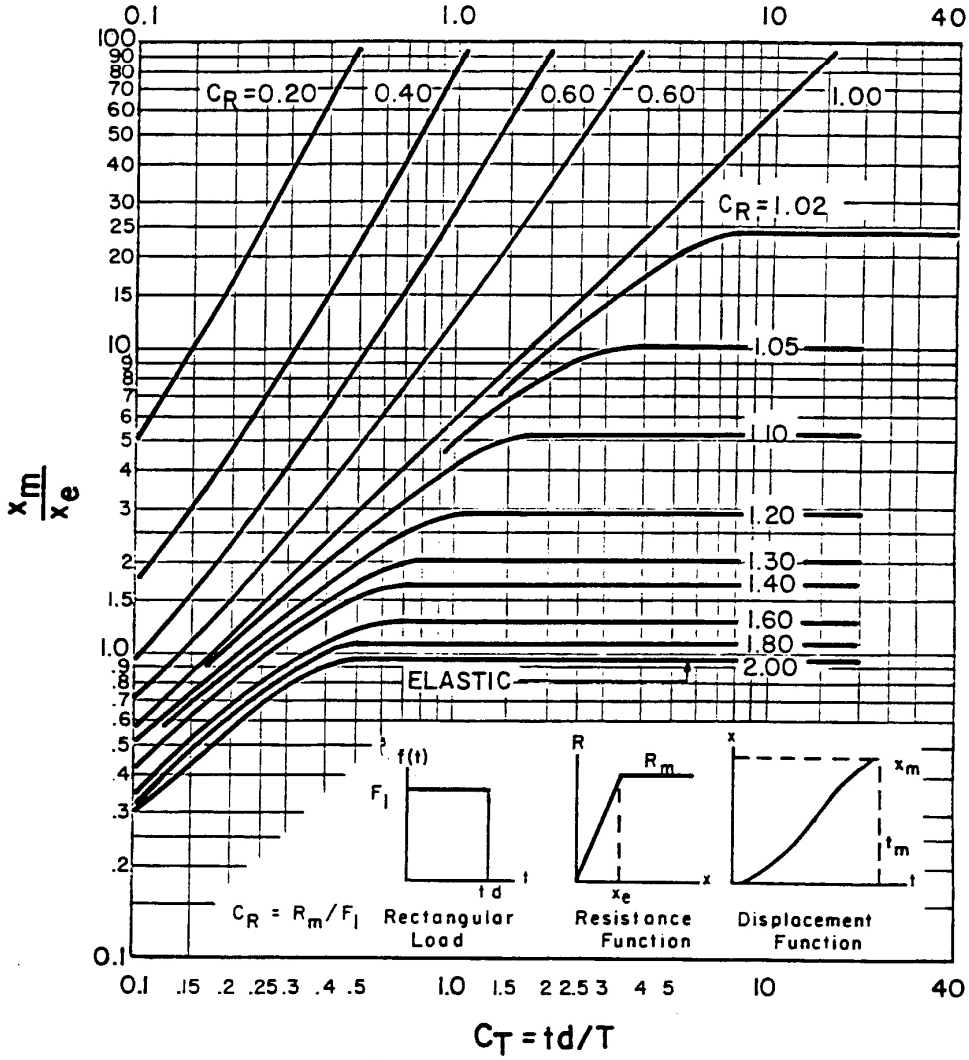

SEABROOK STATION UPDATED FINAL SAFETY ANALYSIS REPORT	X_m/X_e Curves for Elasto-Plastic System Rectangular Impulse Load (Reference 15)	
		Figure 3.5-5

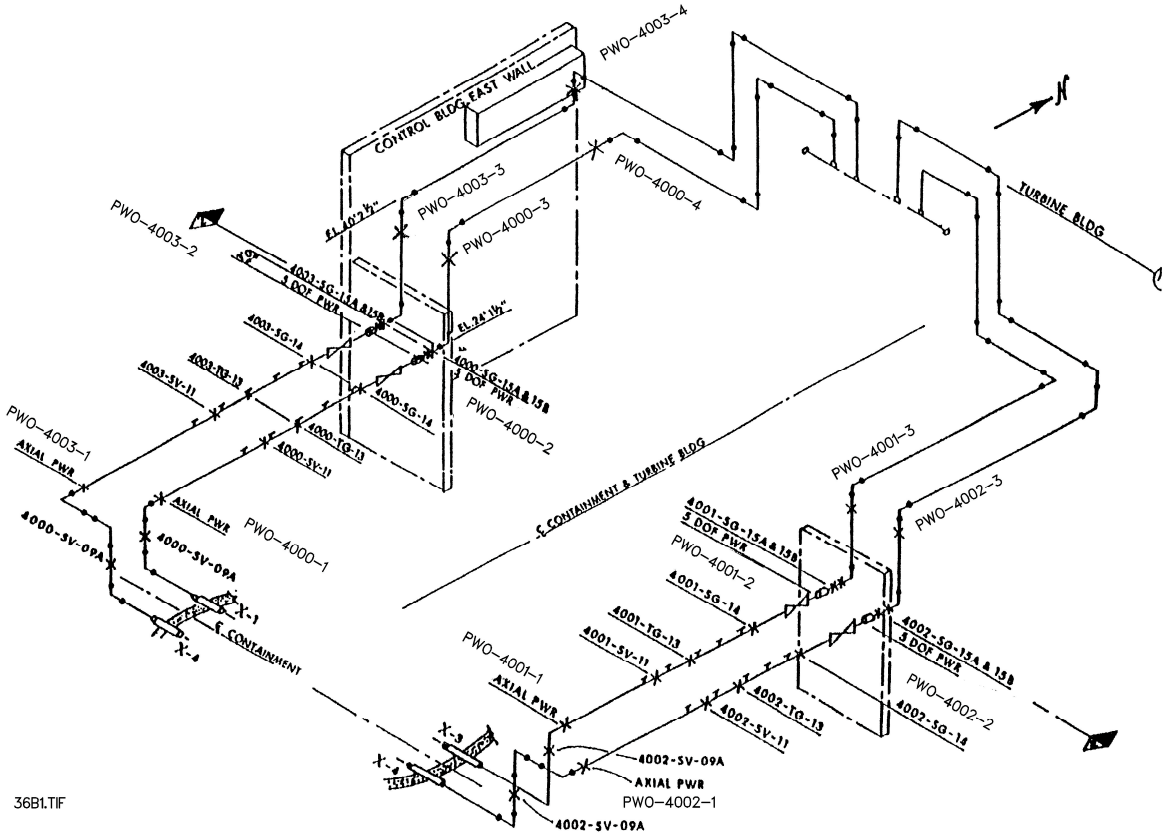

SEABROOK STATION UPDATED FINAL SAFETY ANALYSIS REPORT	Main Steam Piping Outside Containment	
		Figure 3.6(B)-1

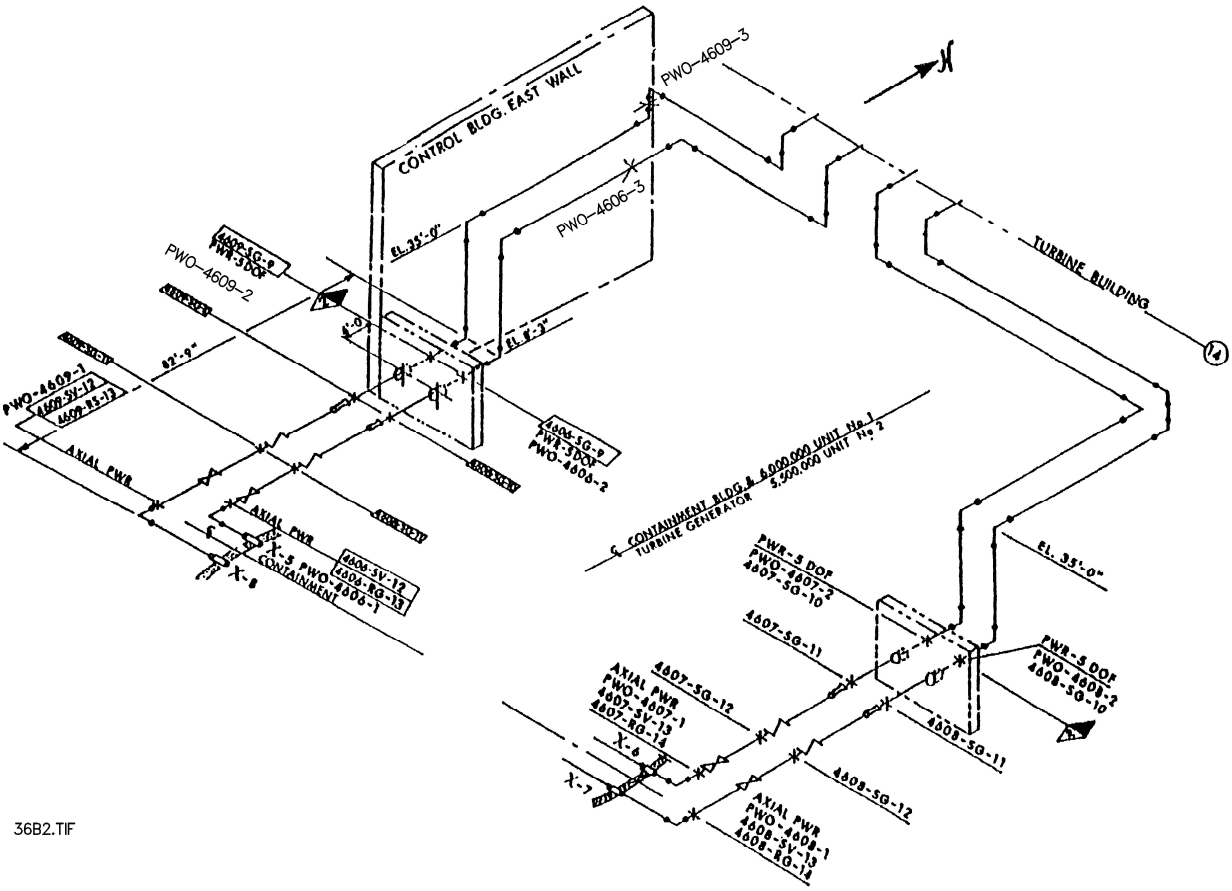

SEABROOK STATION UPDATED FINAL SAFETY ANALYSIS REPORT	Feedwater Piping Outside Containment	
		Figure 3.6(B)-2

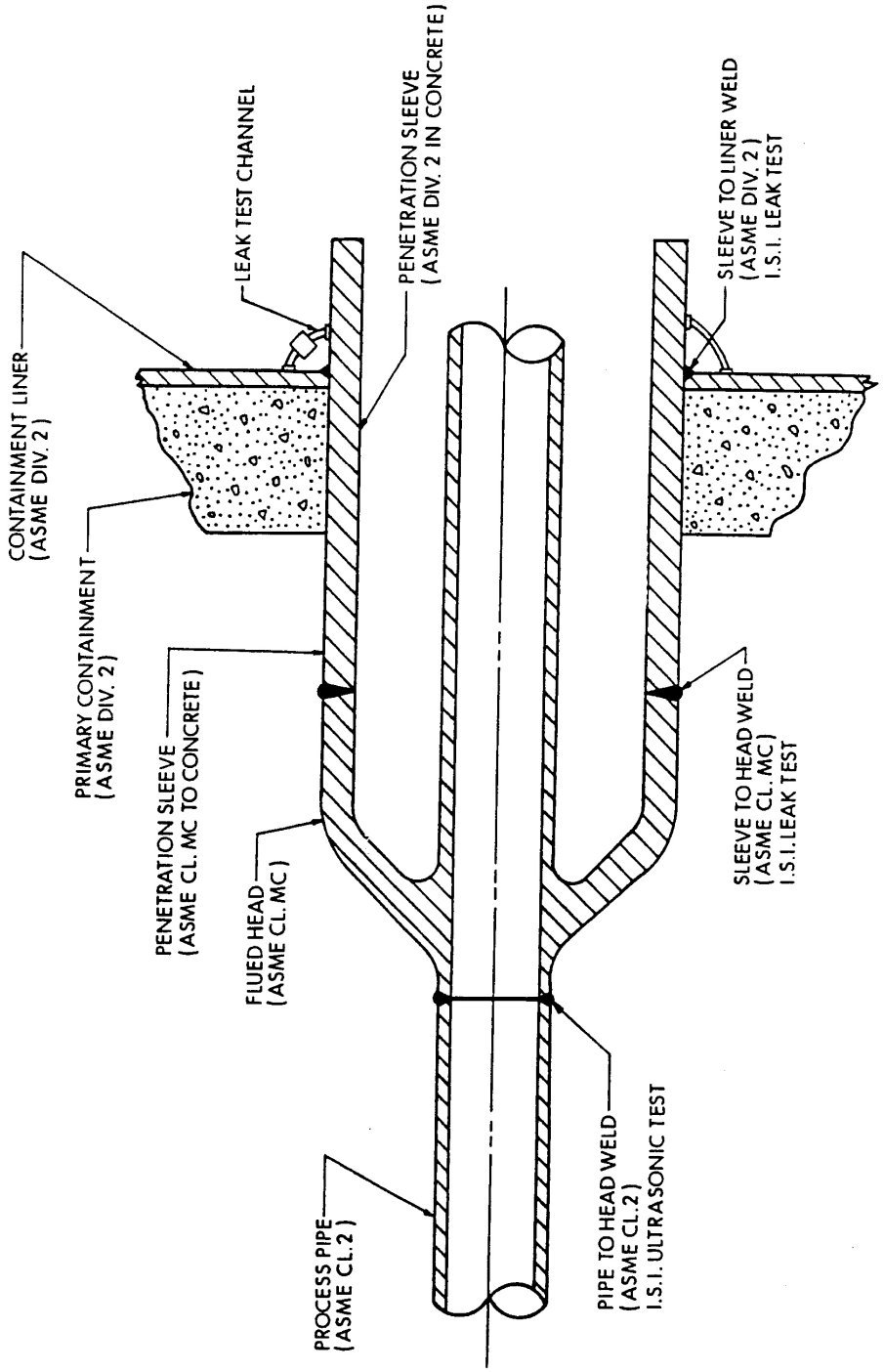

SEABROOK STATION UPDATED FINAL SAFETY ANALYSIS REPORT	Containment Penetration (Hot High Energy Lines)	
		Figure 3.6(B)-3

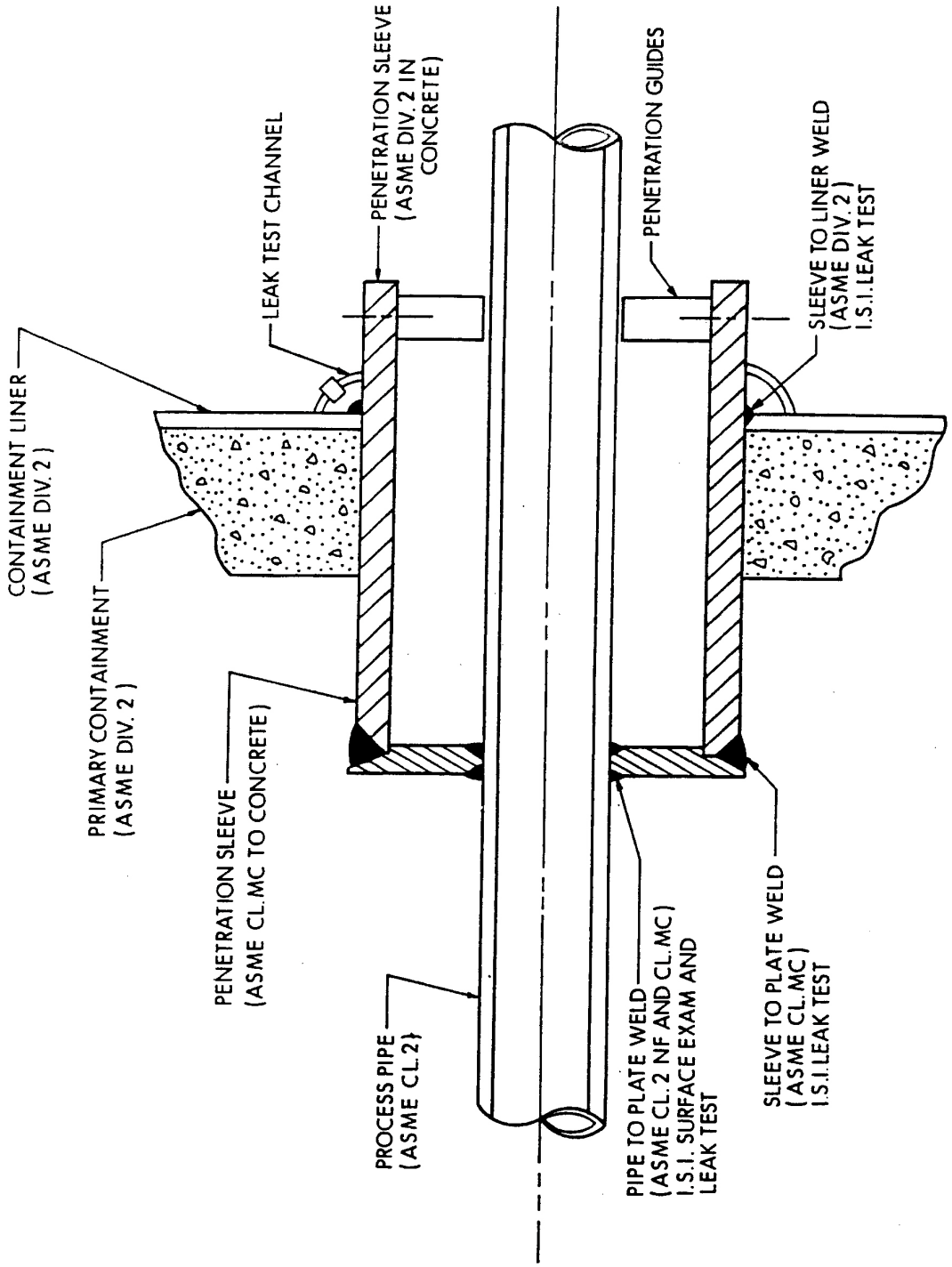

SEABROOK STATION UPDATED FINAL SAFETY ANALYSIS REPORT	Containment Penetration (Cold High Energy Lines)	
		Figure 3.6(B)-4

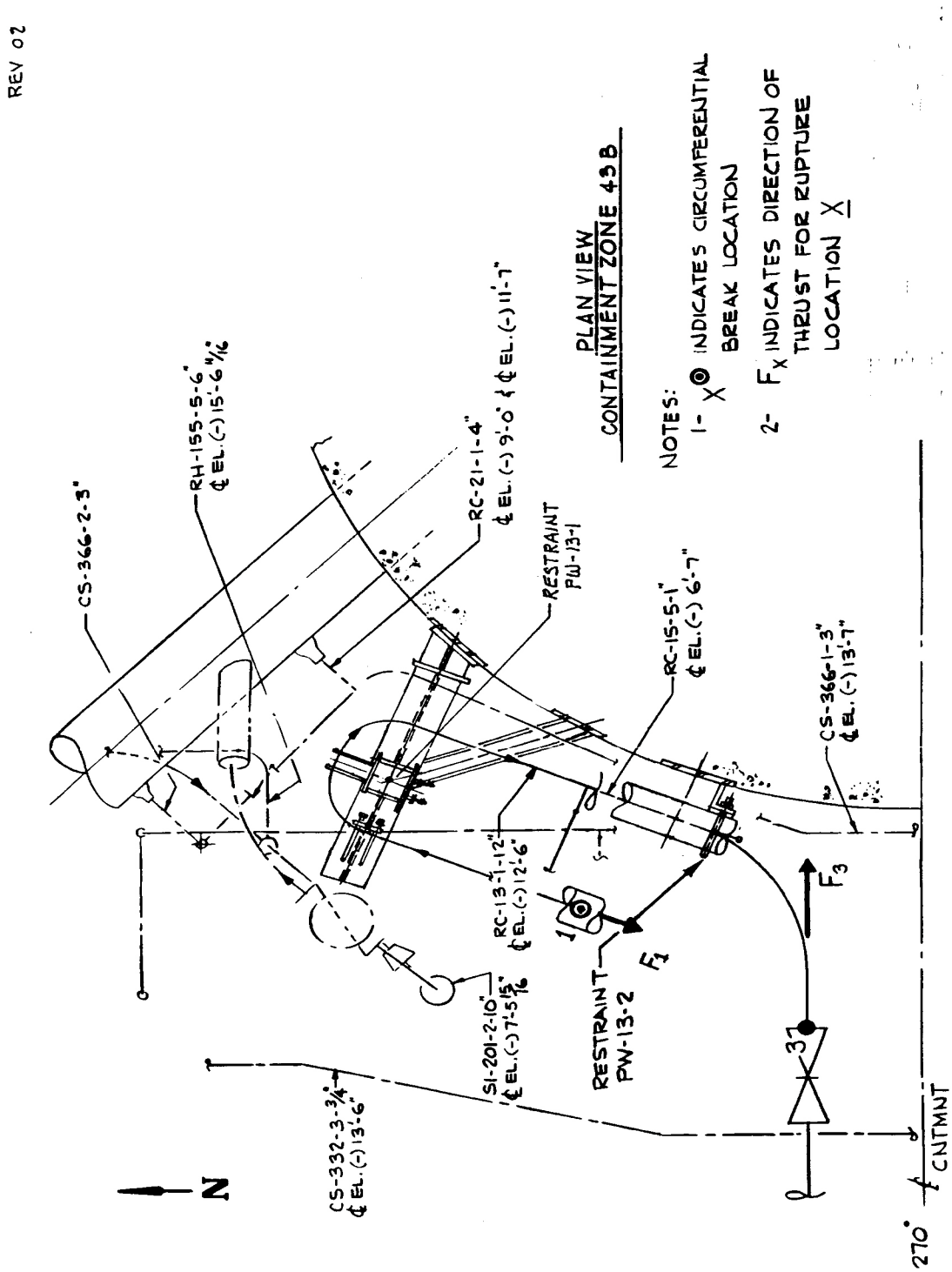

SEABROOK STATION UPDATED FINAL SAFETY ANALYSIS REPORT	RC Line 13 Pipe Whip Restraint Protecting CS, RC and RH Lines and Valves - Containment Zone 43B	
		Figure 3.6(B)-5

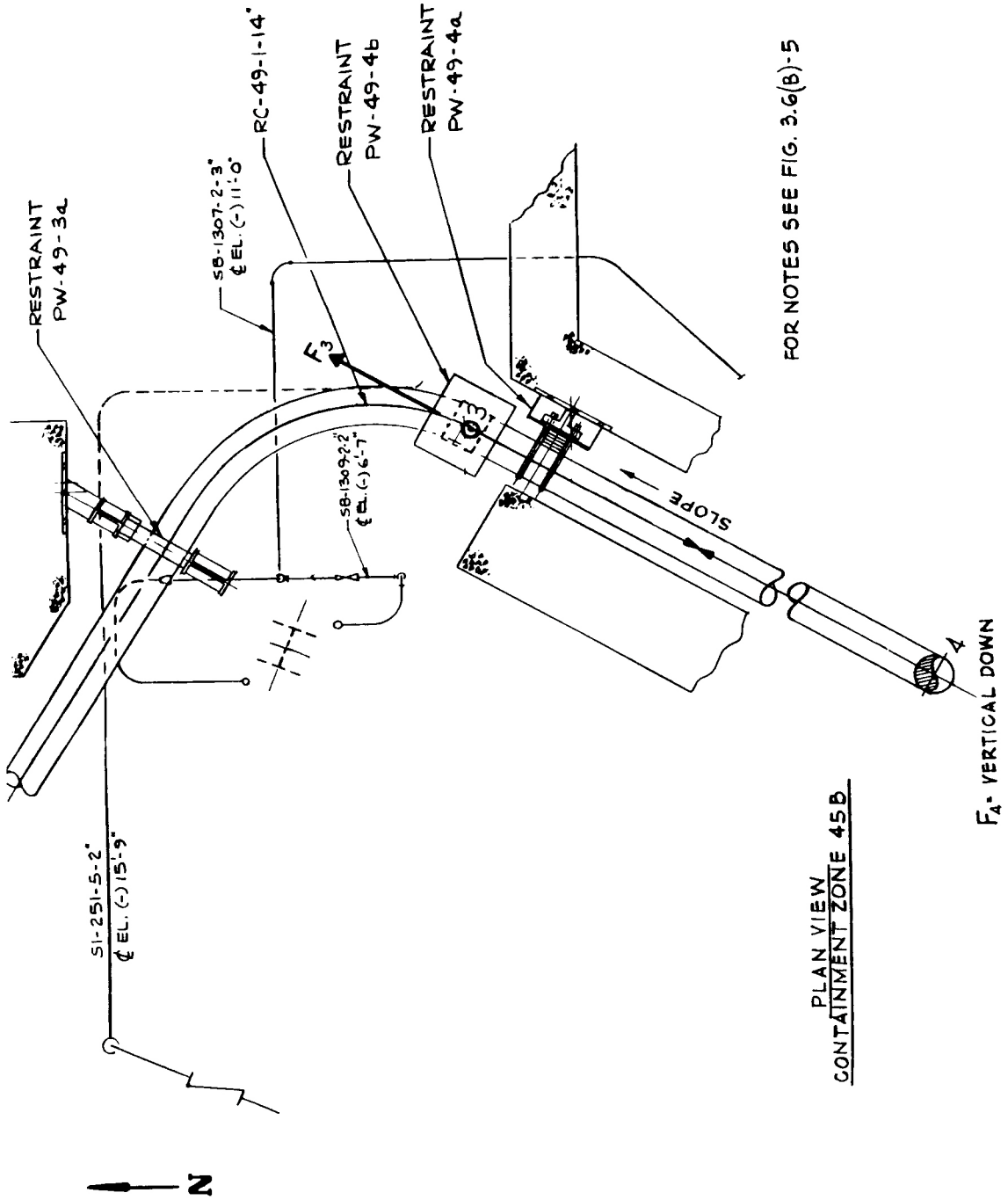

SEABROOK STATION UPDATED FINAL SAFETY ANALYSIS REPORT	Pressurizer Surge Line Pipe Whip Restraint Protecting Steam Generator Blowdown and Safety Injection Lines - Containment Zone 45B	
		Figure 3.6(B)-6

REV 02

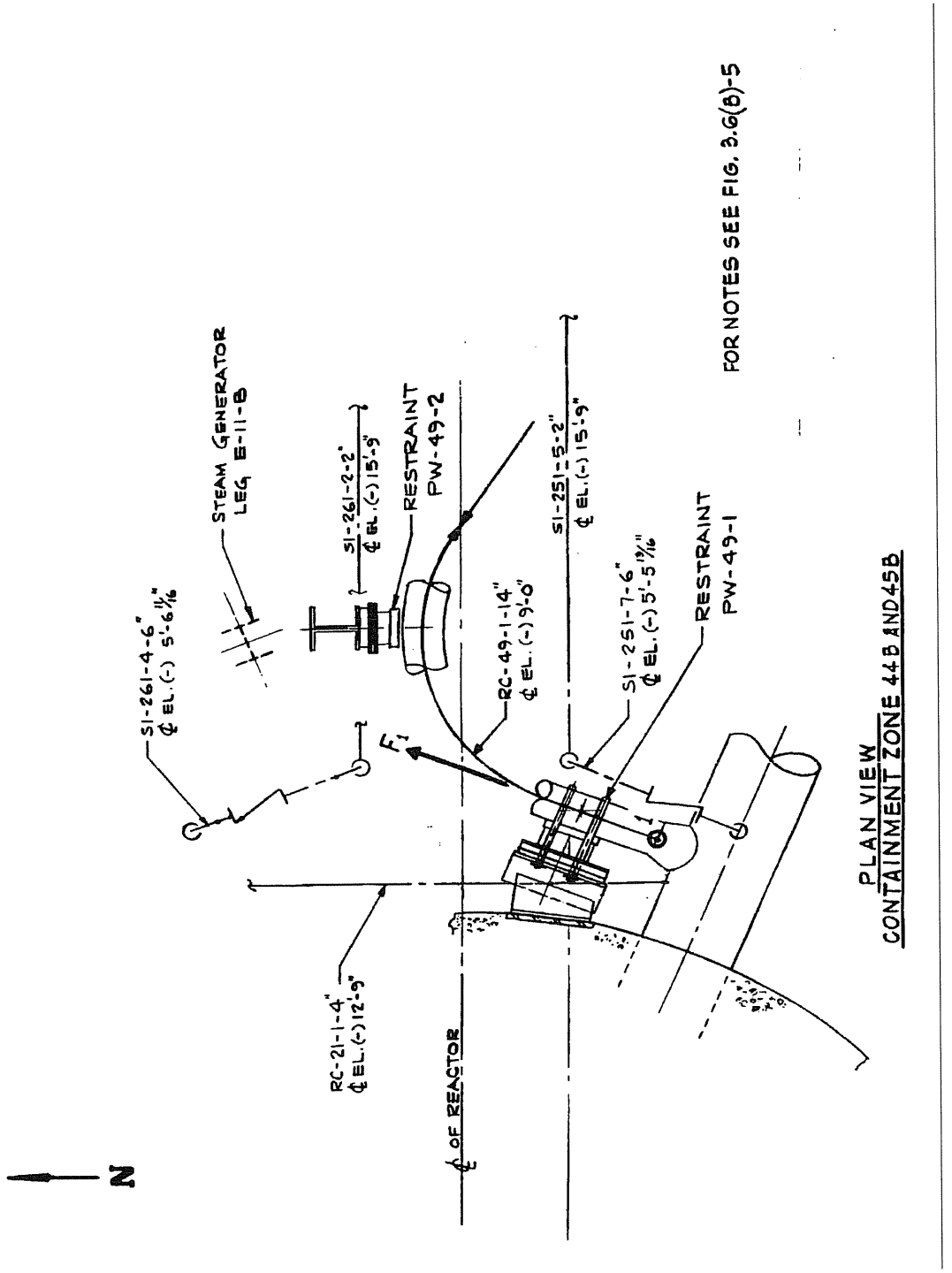

SEABROOK STATION UPDATED FINAL SAFETY ANALYSIS REPORT	Pressurizer Surge Line Pipe Whip Restraint Protecting Steam Generator Support, Reactor Coolant and Safety Injection Lines -Containment Zone 44B and 45B	
		Figure 3.6(B)-7

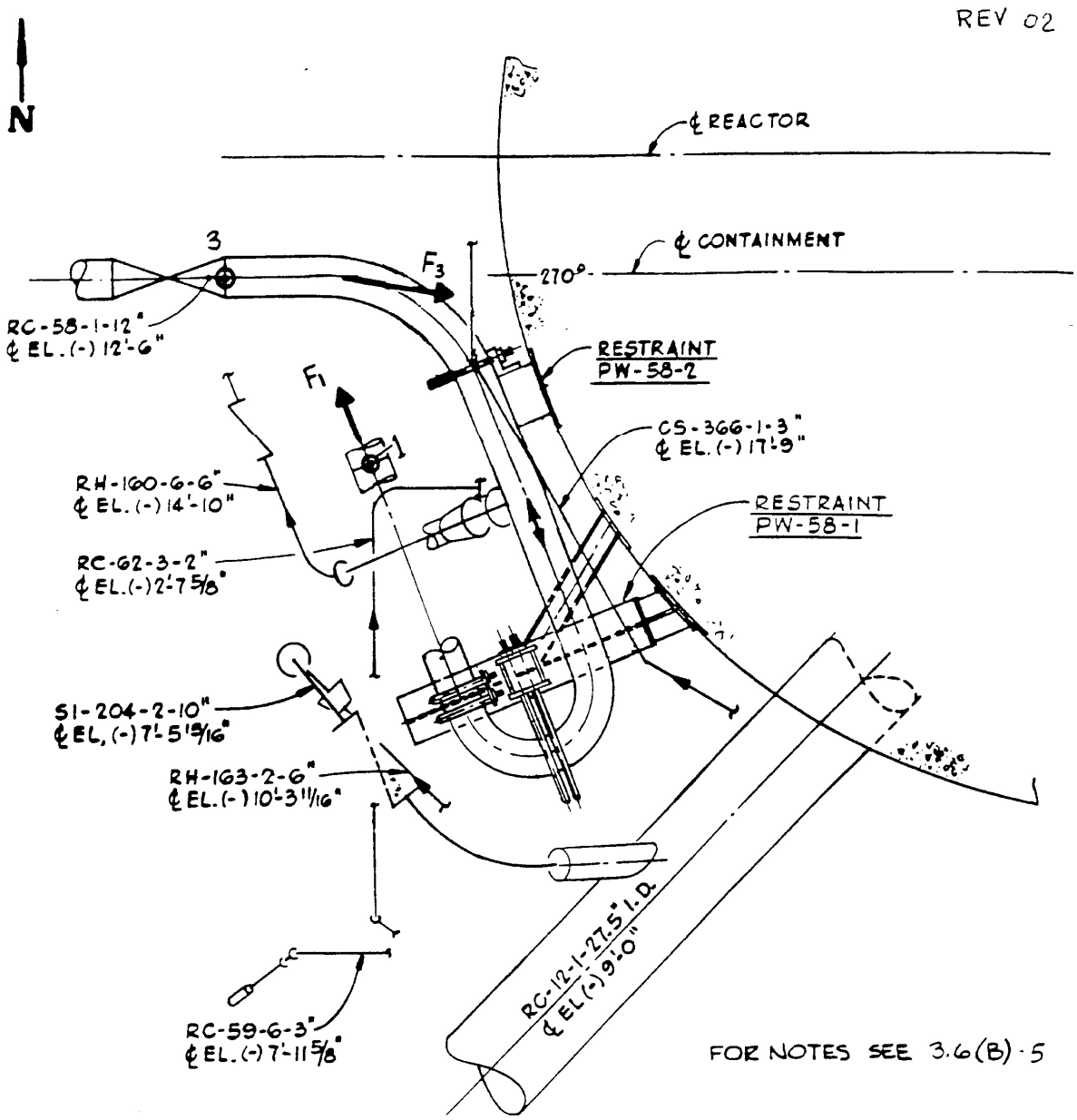

PLAN VIEW
CONTAINMENT ZONE 46B

SEABROOK STATION UPDATED FINAL SAFETY ANALYSIS REPORT	RC-58 Pipe Whip Restraint Protecting RC, RH, and SI Lines and Valves - Containment Zone 46B	
		Figure 3.6(B)-8

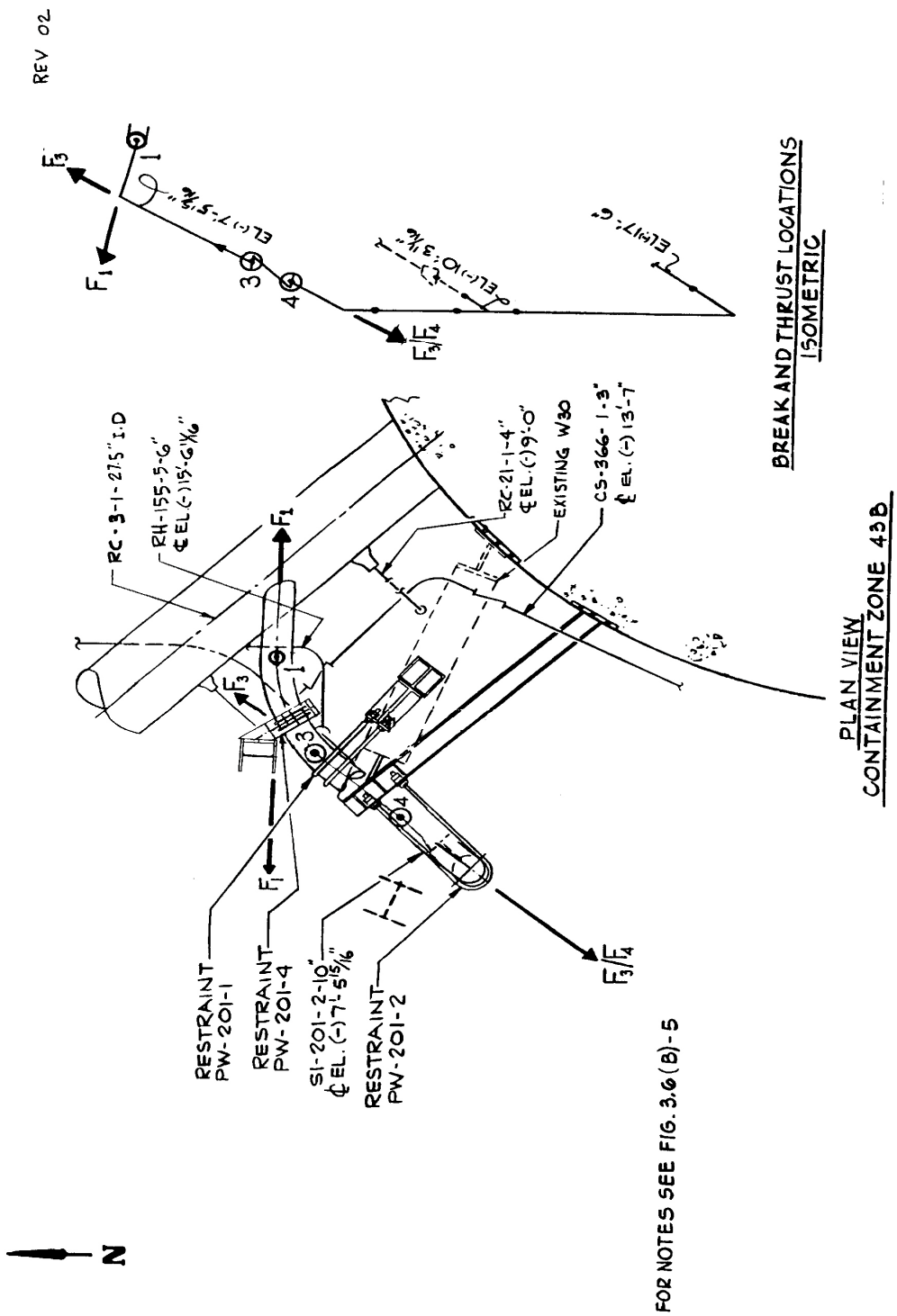

SEABROOK STATION UPDATED FINAL SAFETY ANALYSIS REPORT	Safety Injection Accumulator Line Pipe Whip Restraint Protecting CS, RH and RC Lines and Valves - Containment Zone 43B	
		Figure 3.6(B)-9

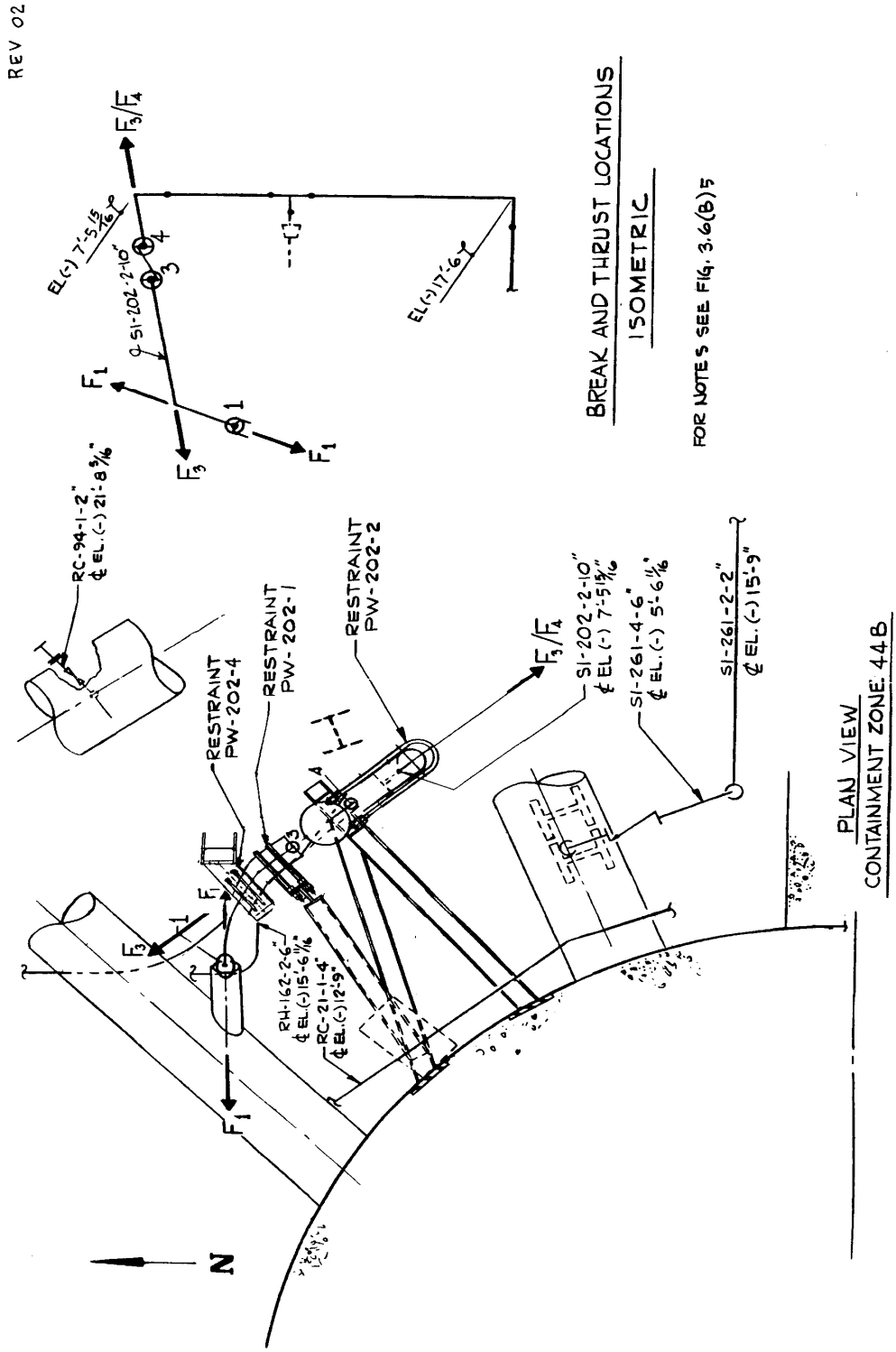

SEABROOK STATION UPDATED FINAL SAFETY ANALYSIS REPORT	SI Line Pipe Whip Restraints Protecting RC, RH, and SI Lines and Valves - Containment Zone 44B	
		Figure 3.6(B)-10

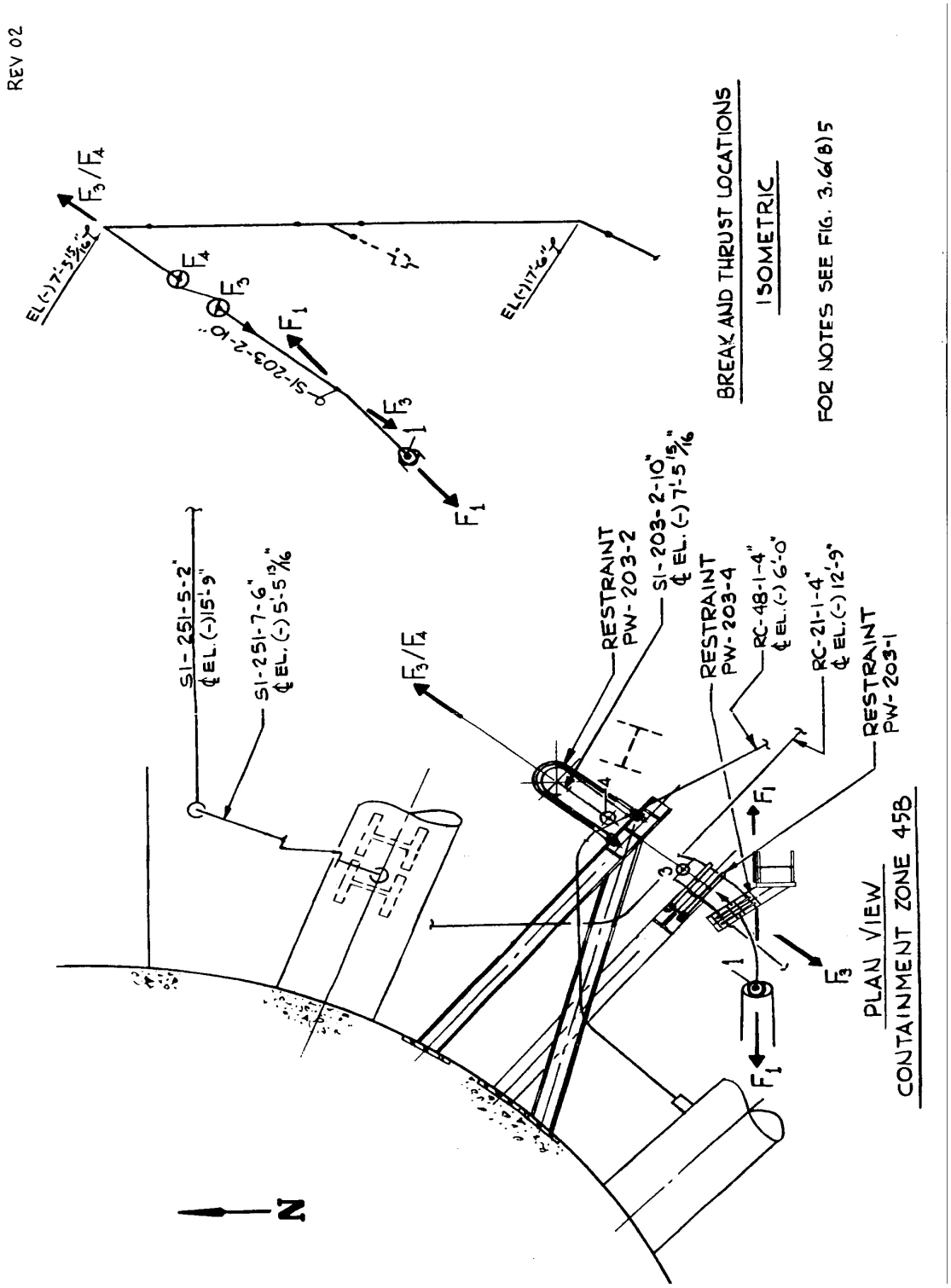

SEABROOK STATION UPDATED FINAL SAFETY ANALYSIS REPORT	SI Pipe Whip Restraint Protecting RC and SI Lines and Valves -Containment Zone 45B	
		Figure 3.6(B)-11

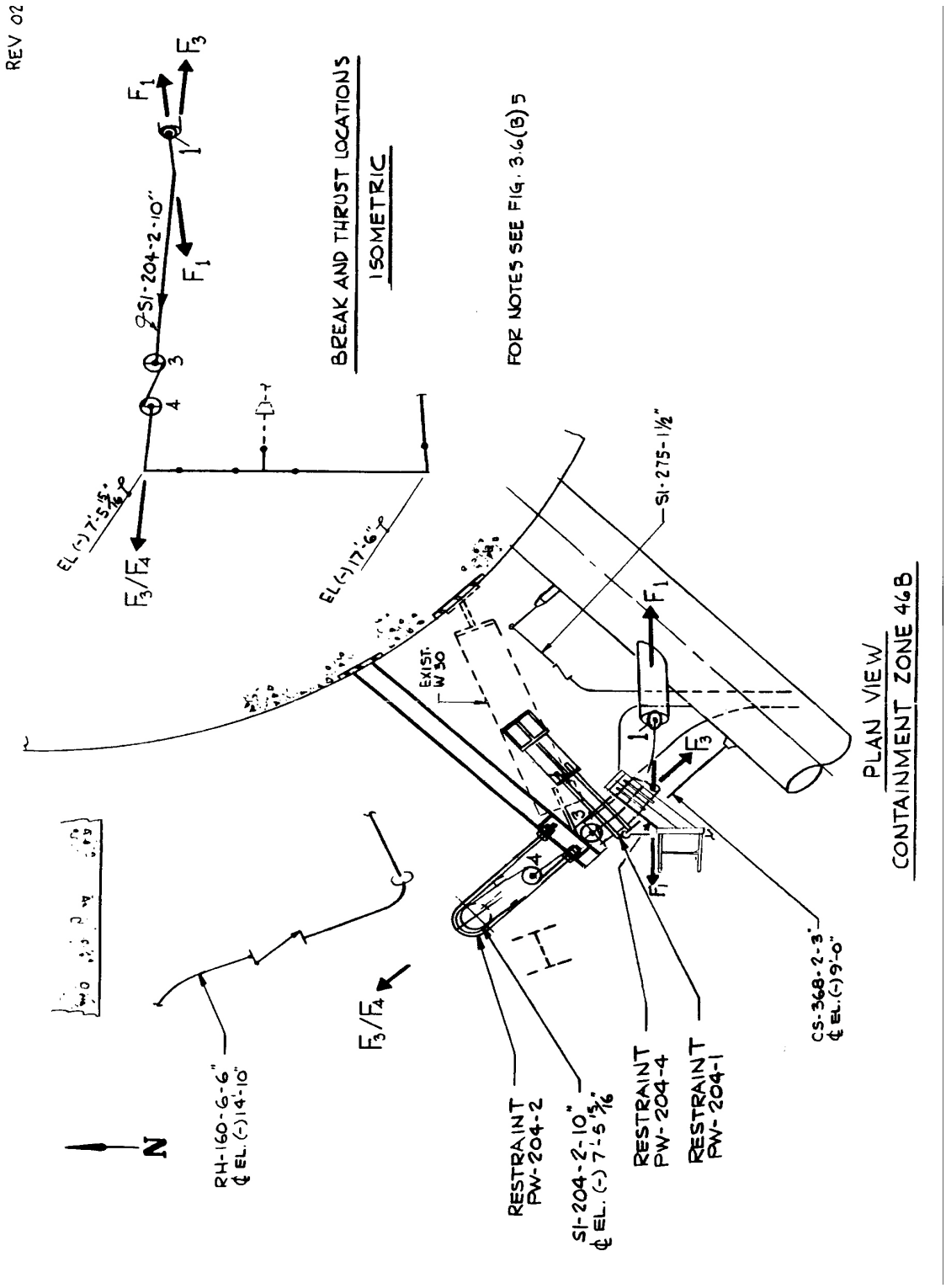

SEABROOK STATION UPDATED FINAL SAFETY ANALYSIS REPORT	SI Pipe Whip Restraint Protecting CS, RC, RH and SI Lines and Valves - Containment Zone 46B	
		Figure 3.6(B)-12

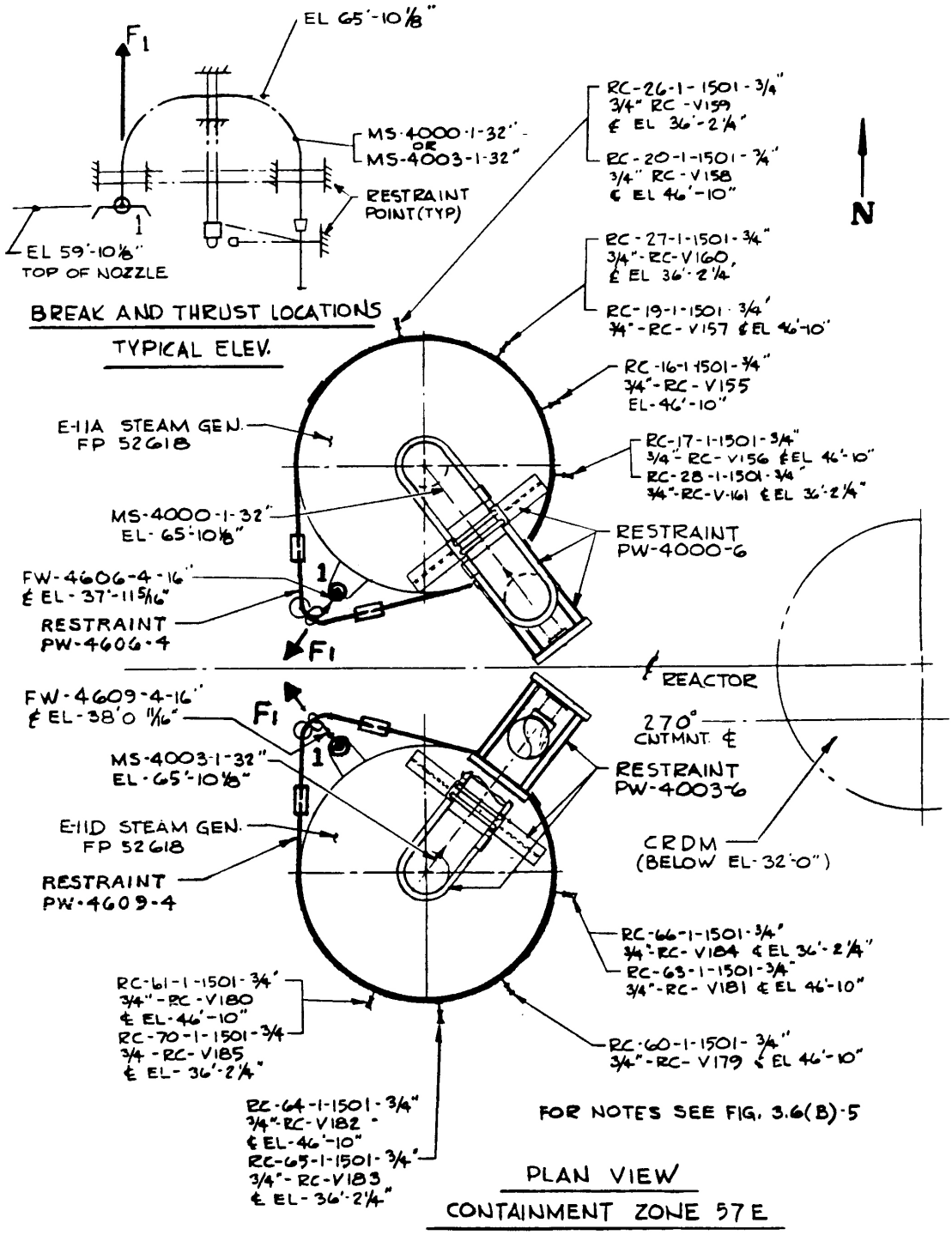

SEABROOK STATION UPDATED FINAL SAFETY ANALYSIS REPORT	MS & FW Pipe Whip Restraints Protecting MS and RC Lines, Upper Level Taps and CRDM Assembly - Containment Zone 57E [2 Sheets]	
		Figure 3.6(B)-13 Sh. 1 of 2

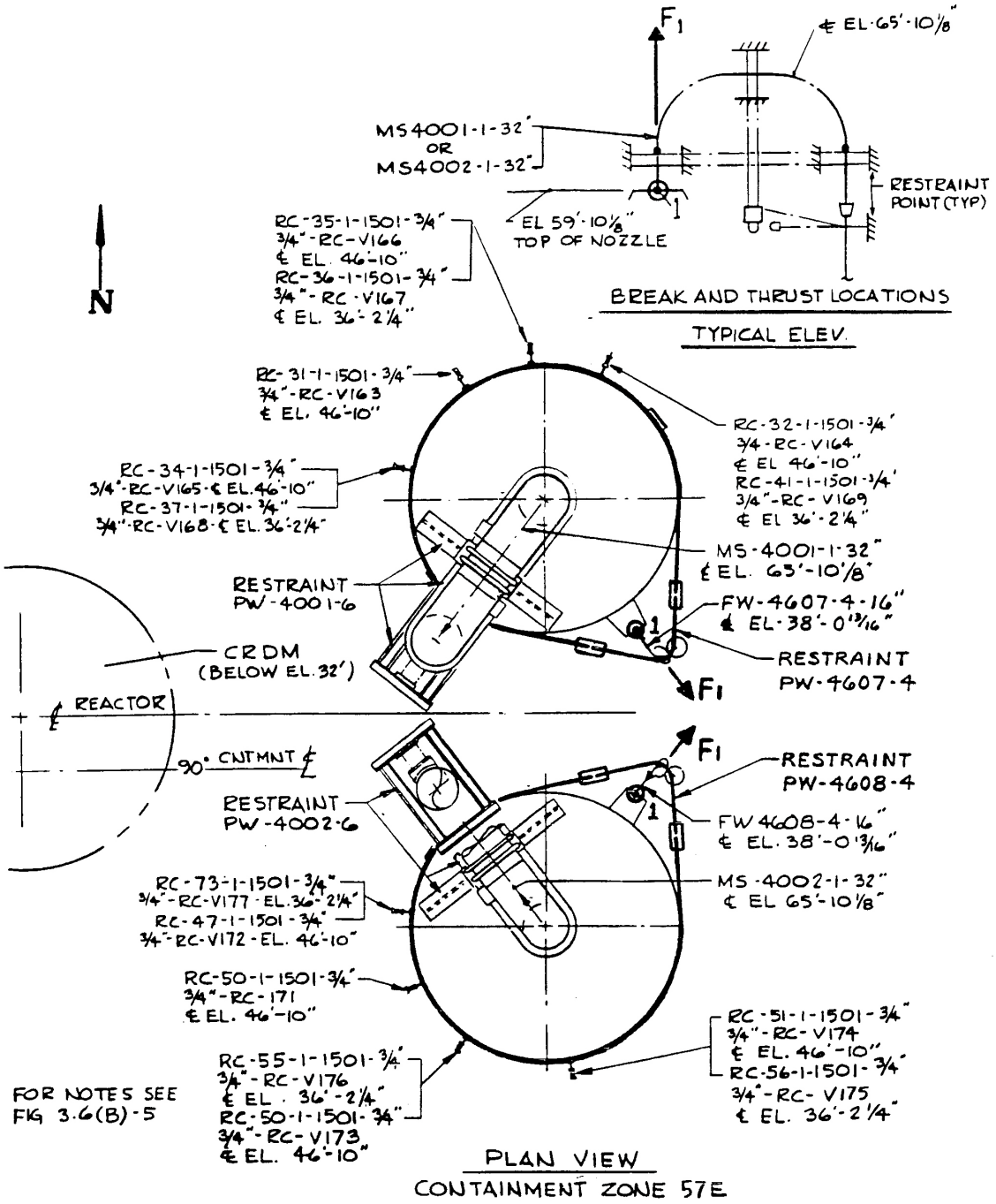

SEABROOK STATION UPDATED FINAL SAFETY ANALYSIS REPORT	MS & FW Pipe Whip Restraints Protecting MS and RC Lines, Upper Level Taps and CRDM Assembly - Containment Zone 57E [2 Sheets]	
		Figure 3.6(B)-13 Sh. 2 of 2

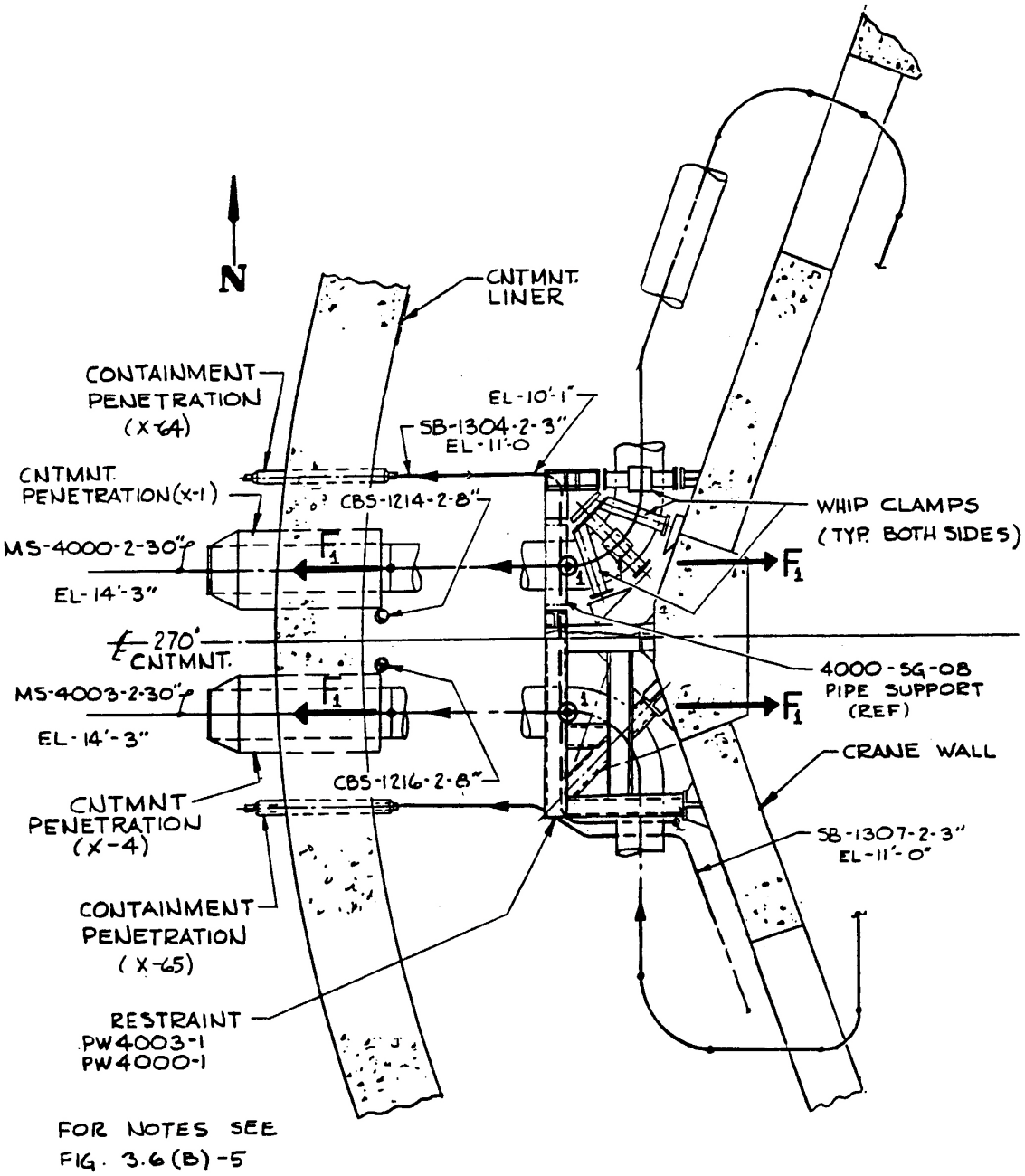

PLAN VIEW
CONTAINMENT ZONE 53C

SEABROOK STATION UPDATED FINAL SAFETY ANALYSIS REPORT	Main Steam Pipe Whip Restraints Protecting SB, CBS Lines, Valves and Containment Liner/Penetrations - Containment Zone 53C	
		Figure 3.6(B)-14

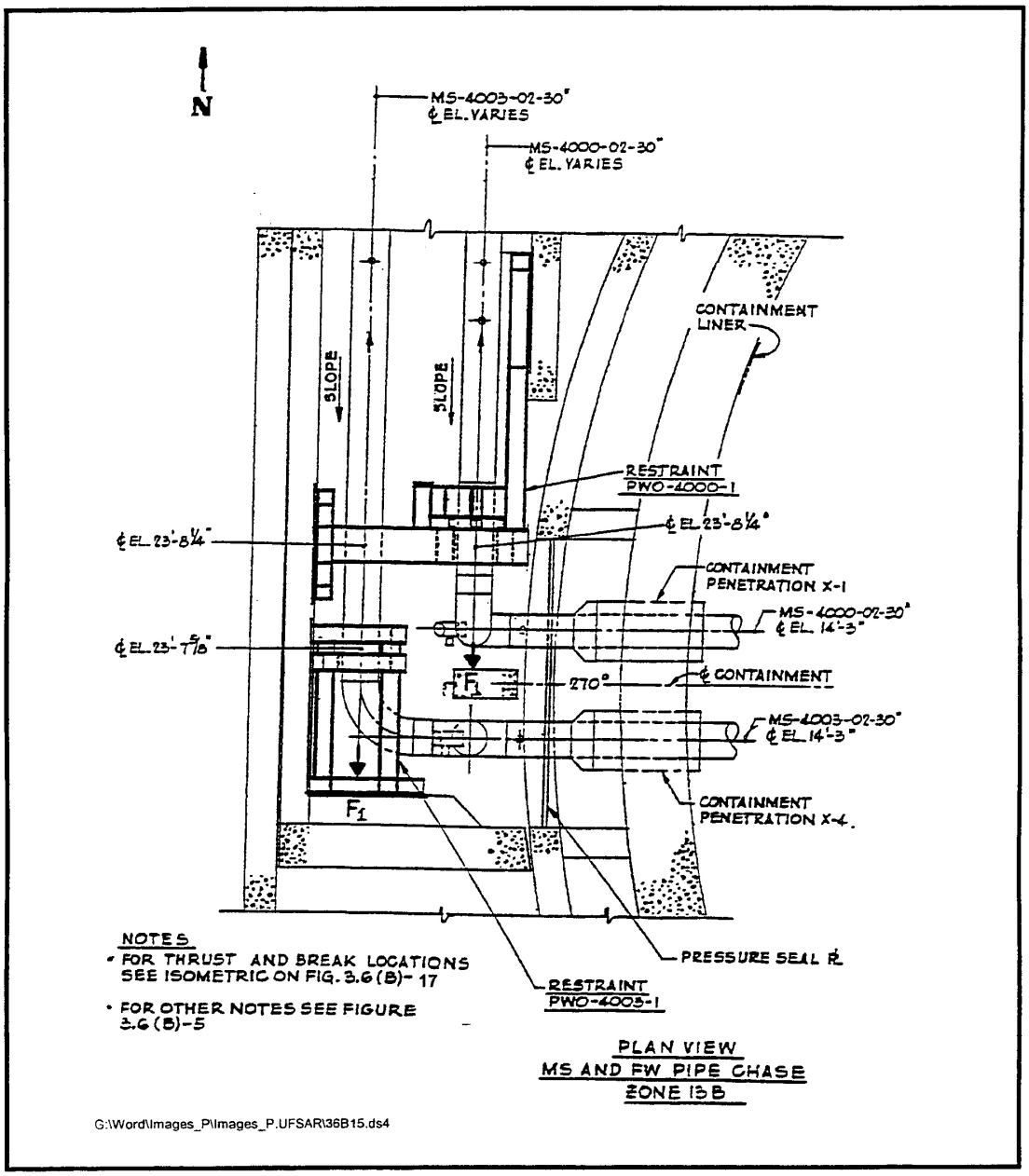

SEABROOK STATION UPDATED FINAL SAFETY ANALYSIS REPORT	Main Steam Line Axial Pipe Whip Restraints Protecting Containment Penetrations - MS and FW Pipe Chase Zone 13B	
		Figure 3.6(B)-15

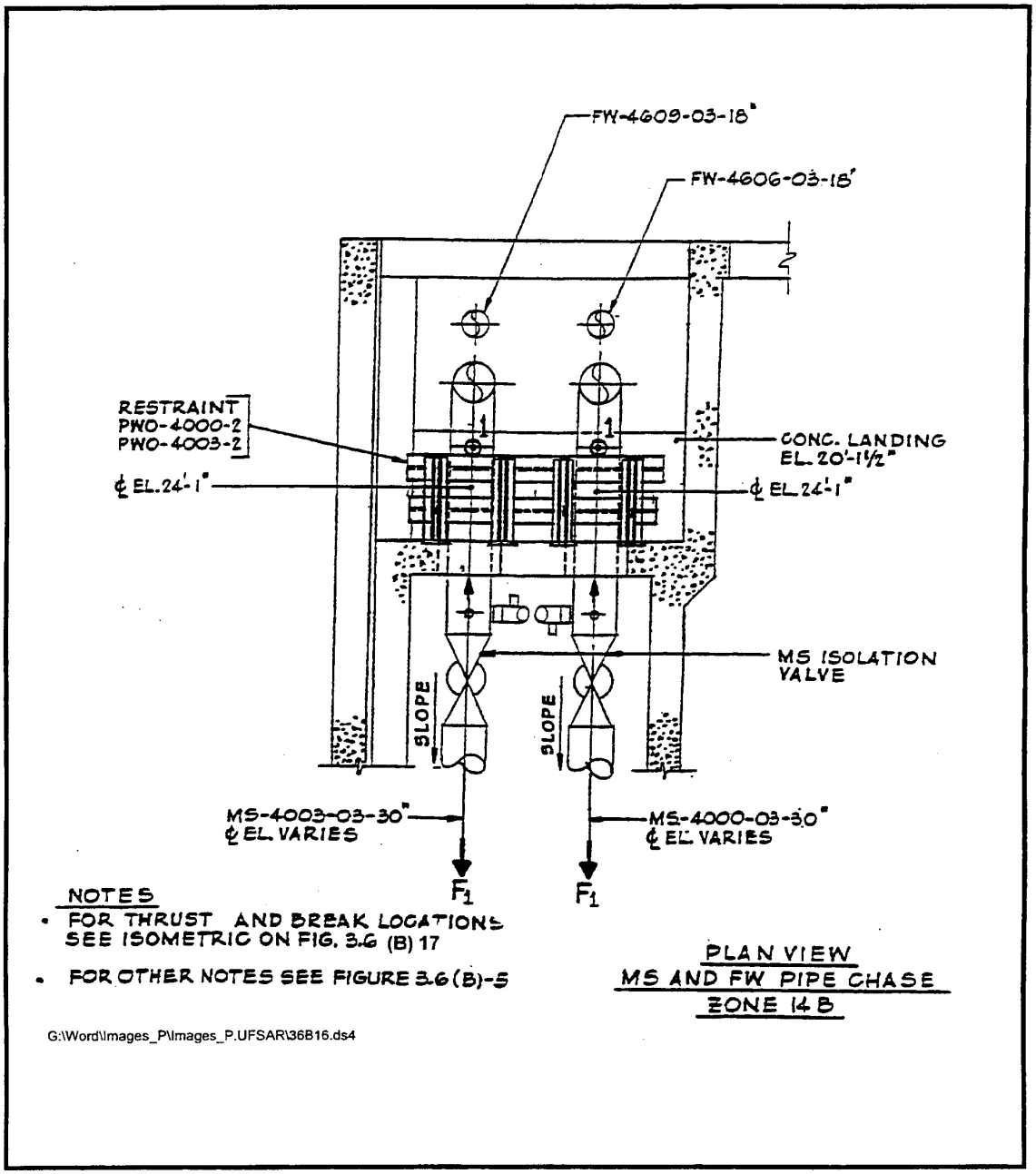

SEABROOK STATION UPDATED FINAL SAFETY ANALYSIS REPORT	Main Steam Pipe Whip Restraints Protecting the Main Steam Isolation Valves and the Containment Penetrations - MS and FW Pipe Chase Zone 14B	
		Figure 3.6(B)-16

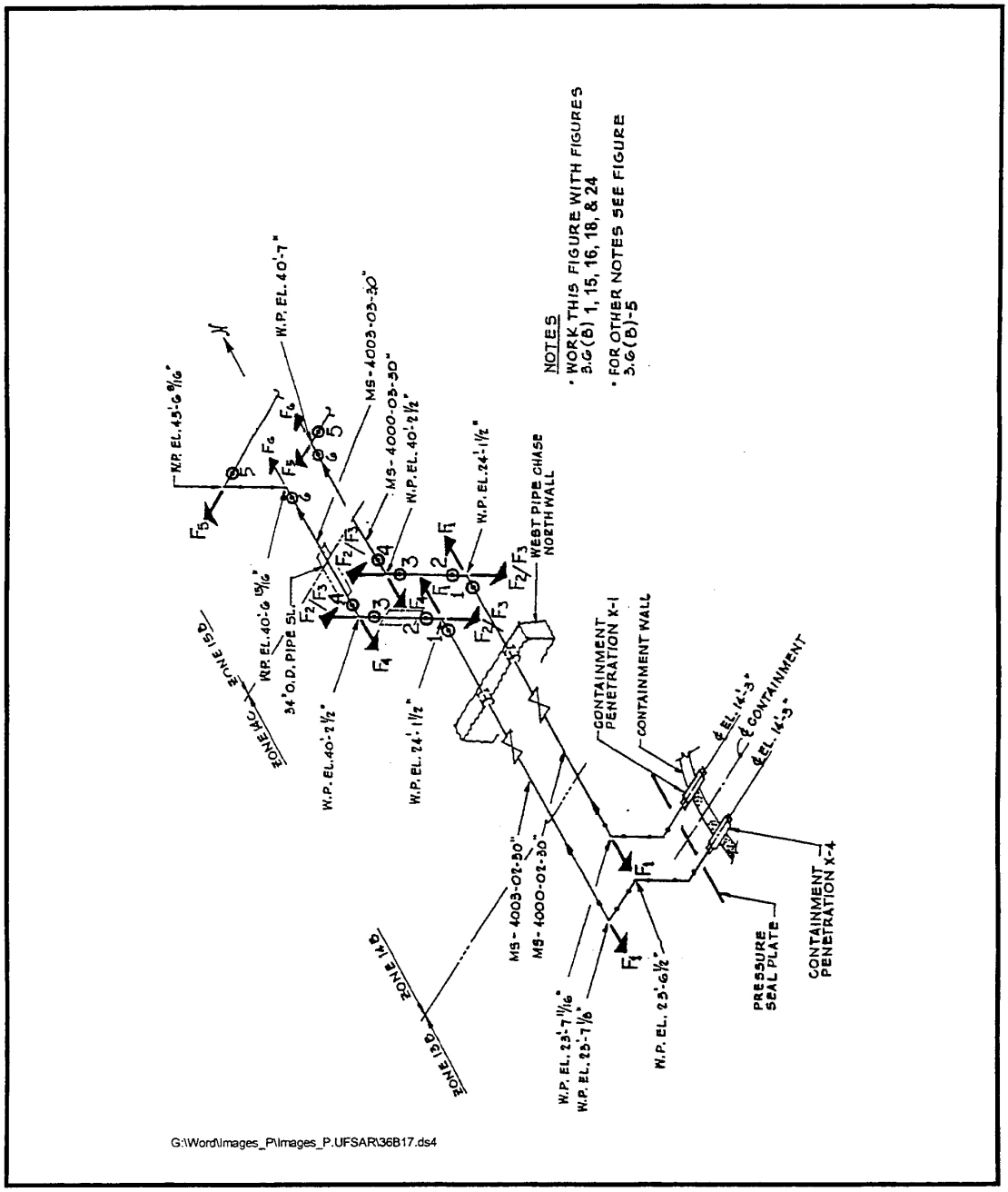

SEABROOK STATION UPDATED FINAL SAFETY ANALYSIS REPORT	Break and Thrust Locations Isometric for MS Pipes in West Pipe Chase	
		Figure 3.6(B)-17

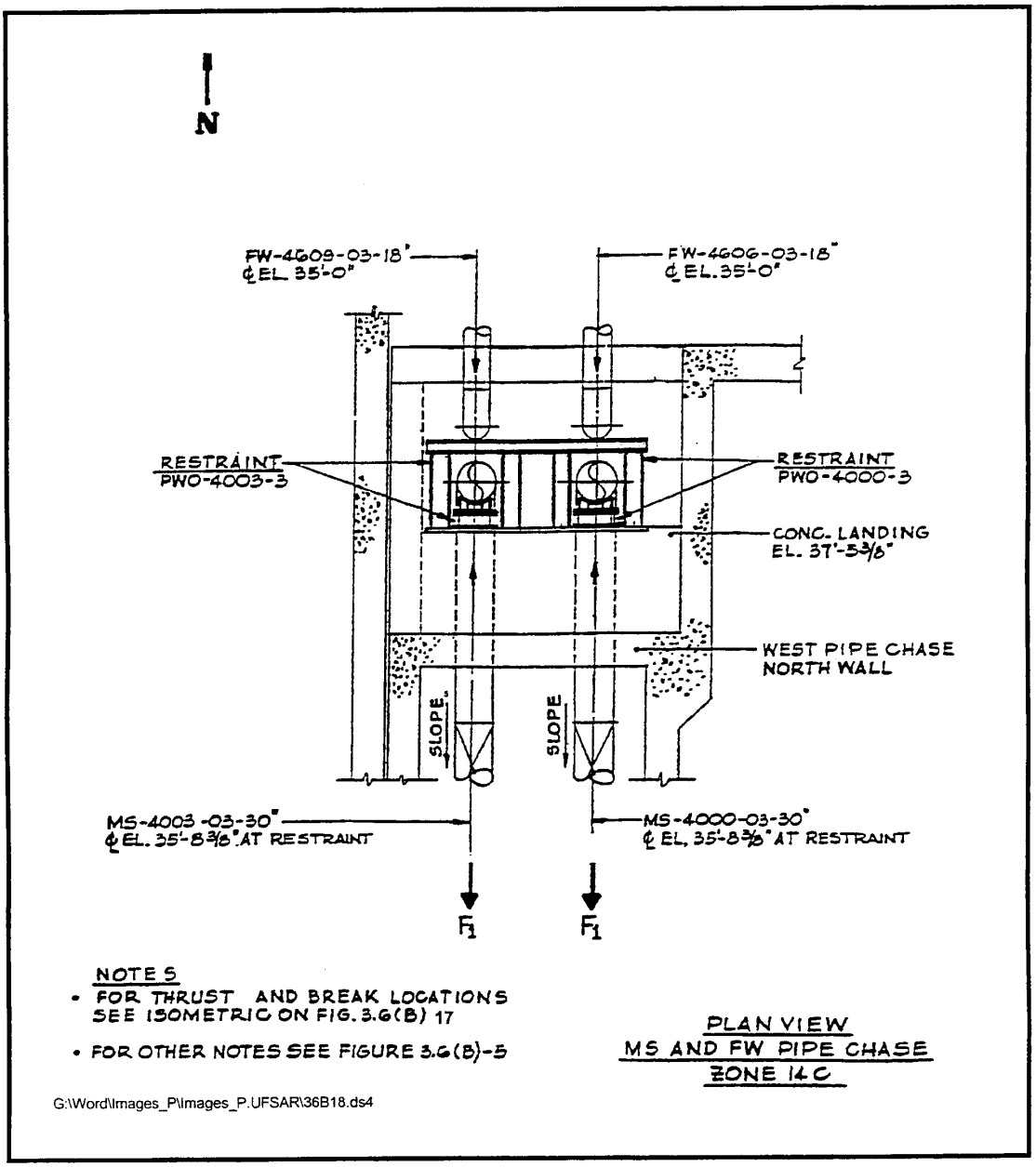

SEABROOK STATION UPDATED FINAL SAFETY ANALYSIS REPORT	Main Steam Line Axial Pipe Whip Restraints Protecting Containment Penetrations-MS and FW Pipe Chase Zone 16B	
		Figure 3.6(B)-18

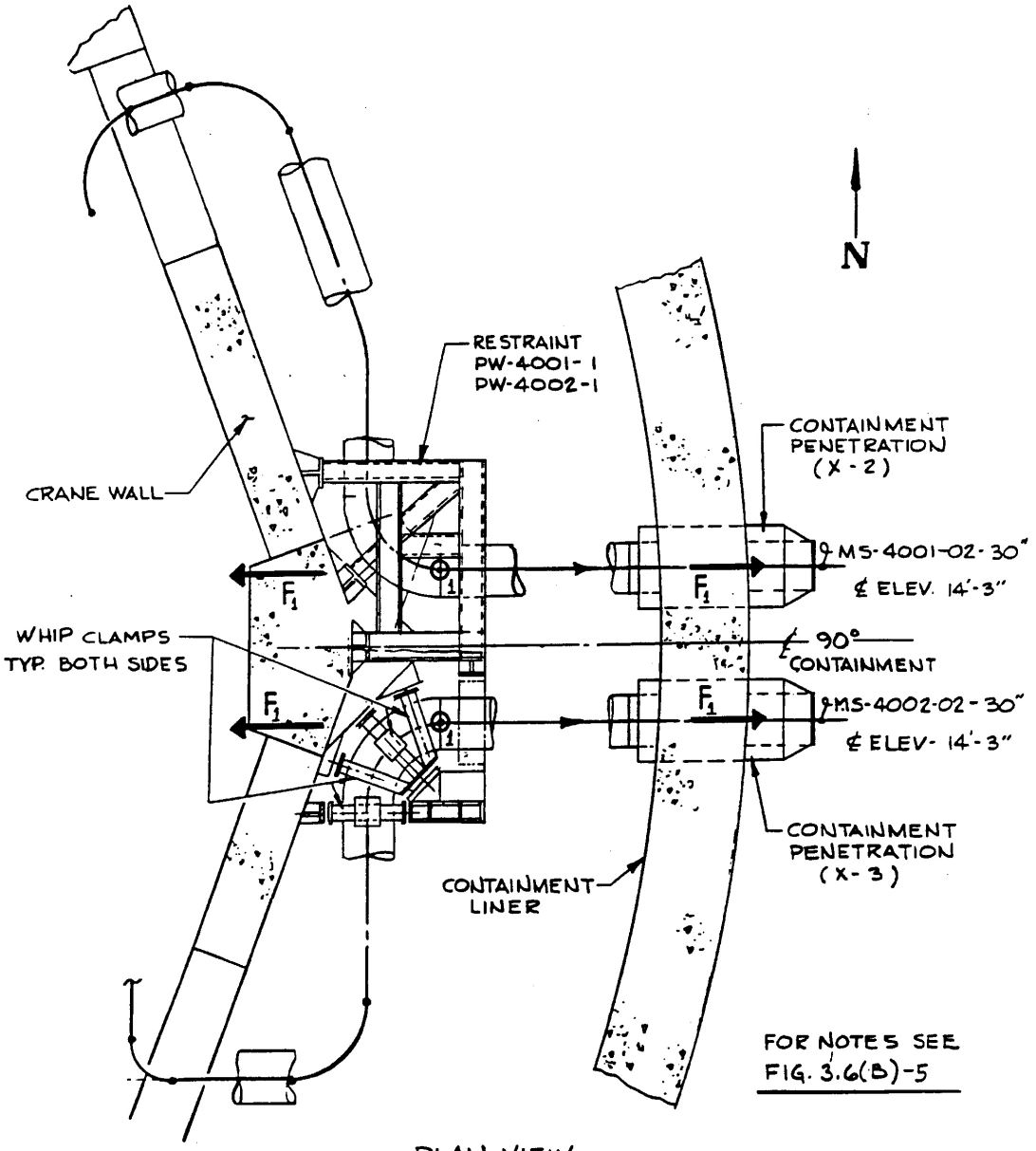

PLAN VIEW
CONTAINMENT ZONE 55D

SEABROOK STATION UPDATED FINAL SAFETY ANALYSIS REPORT	Main Steam Pipe Whip Restraint Protecting Containment Liner and Penetrations - Containment Zone 55D	
		Figure 3.6(B)-19

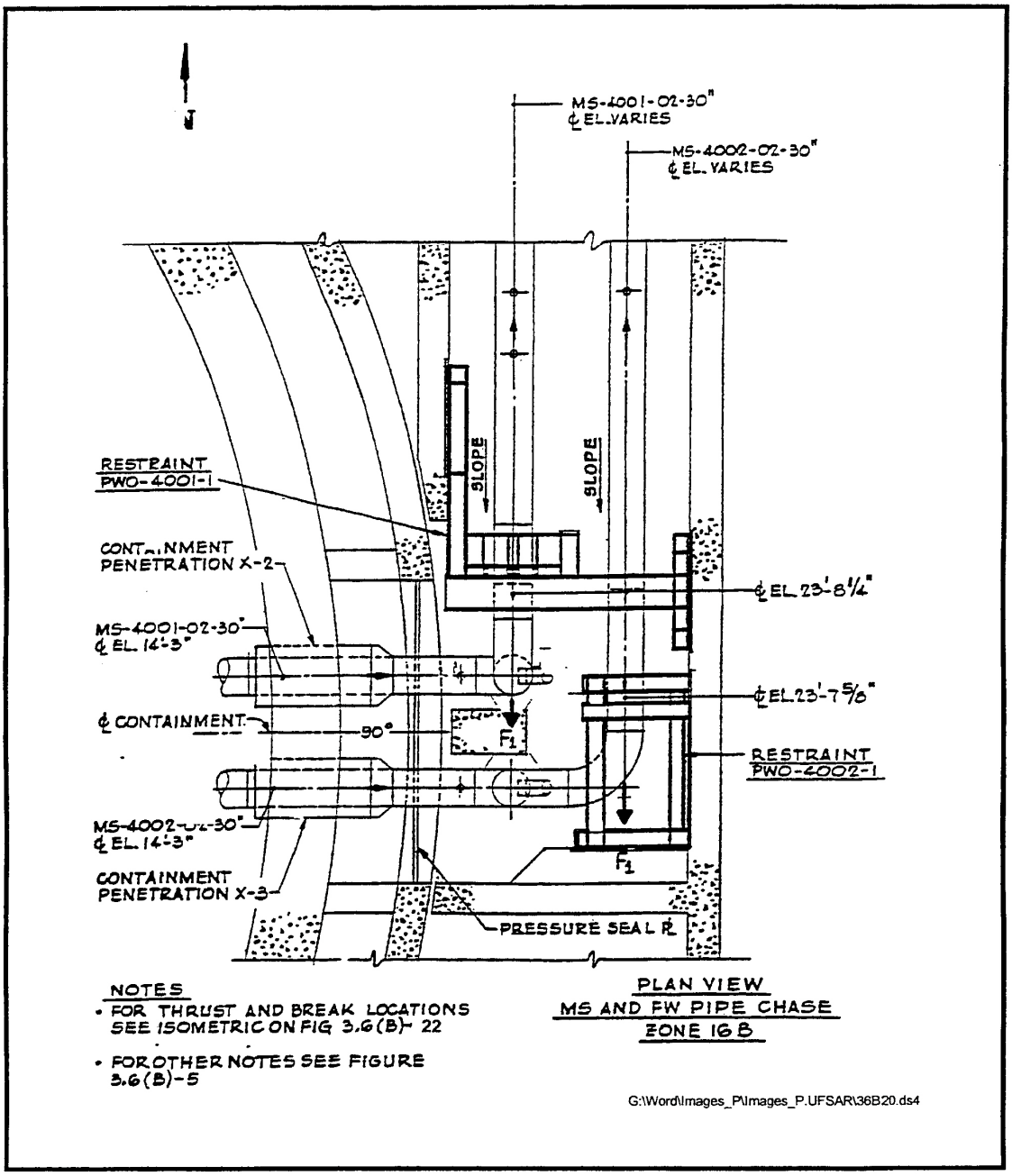

SEABROOK STATION UPDATED FINAL SAFETY ANALYSIS REPORT	Main Steam Line Axial Pipe Whip Restraints Protecting Containment Penetrations - MS and FW Pipe Chase Zone 16B	
		Figure 3.6(B)-20

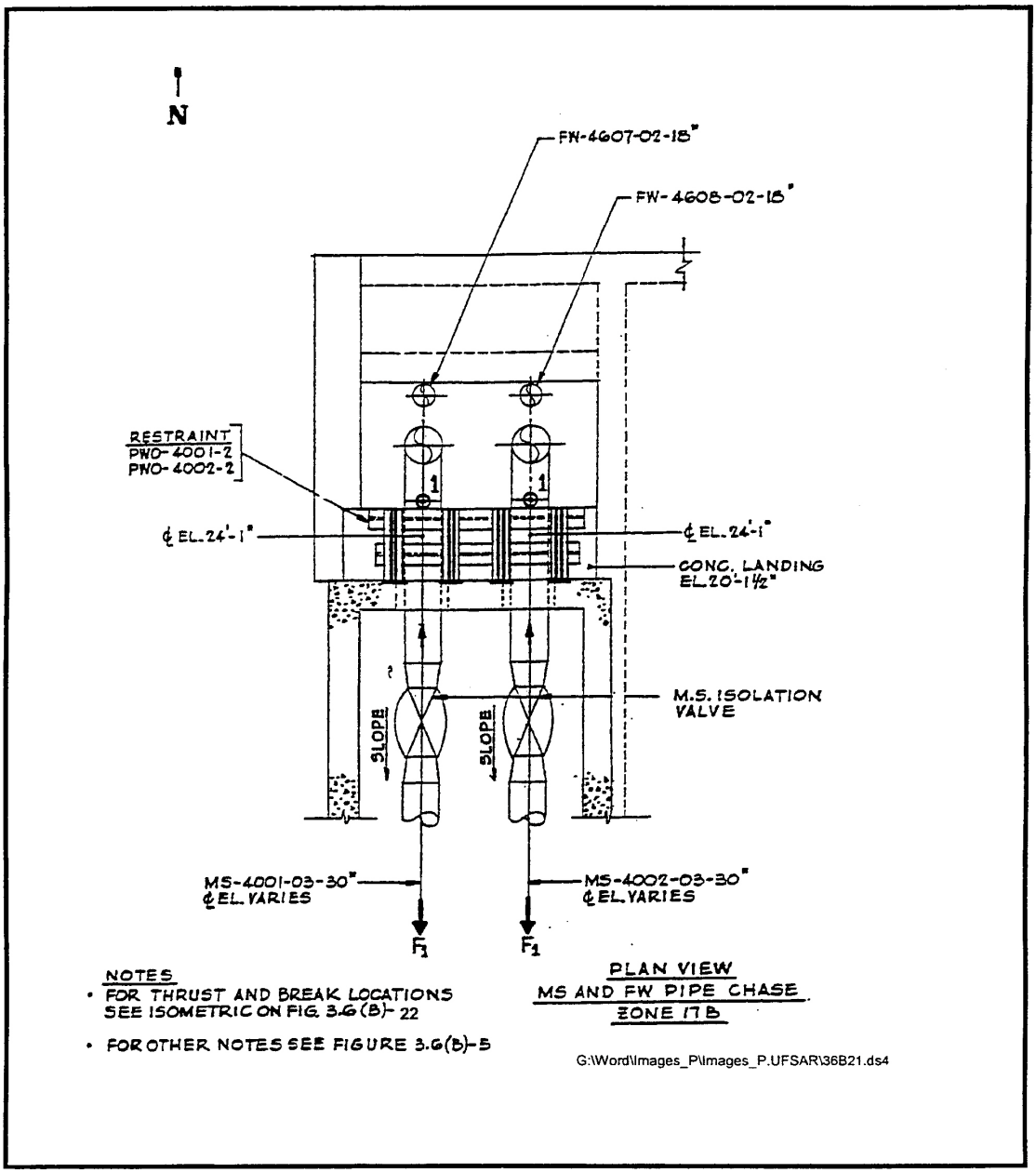

SEABROOK STATION UPDATED FINAL SAFETY ANALYSIS REPORT	Main Steam Pipe Whip Restraints Protecting the Main Steam Isolation Valves and Containment Penetrations - MS and FW Pipe Chase Zone 17B	
		Figure 3.6(B)-21

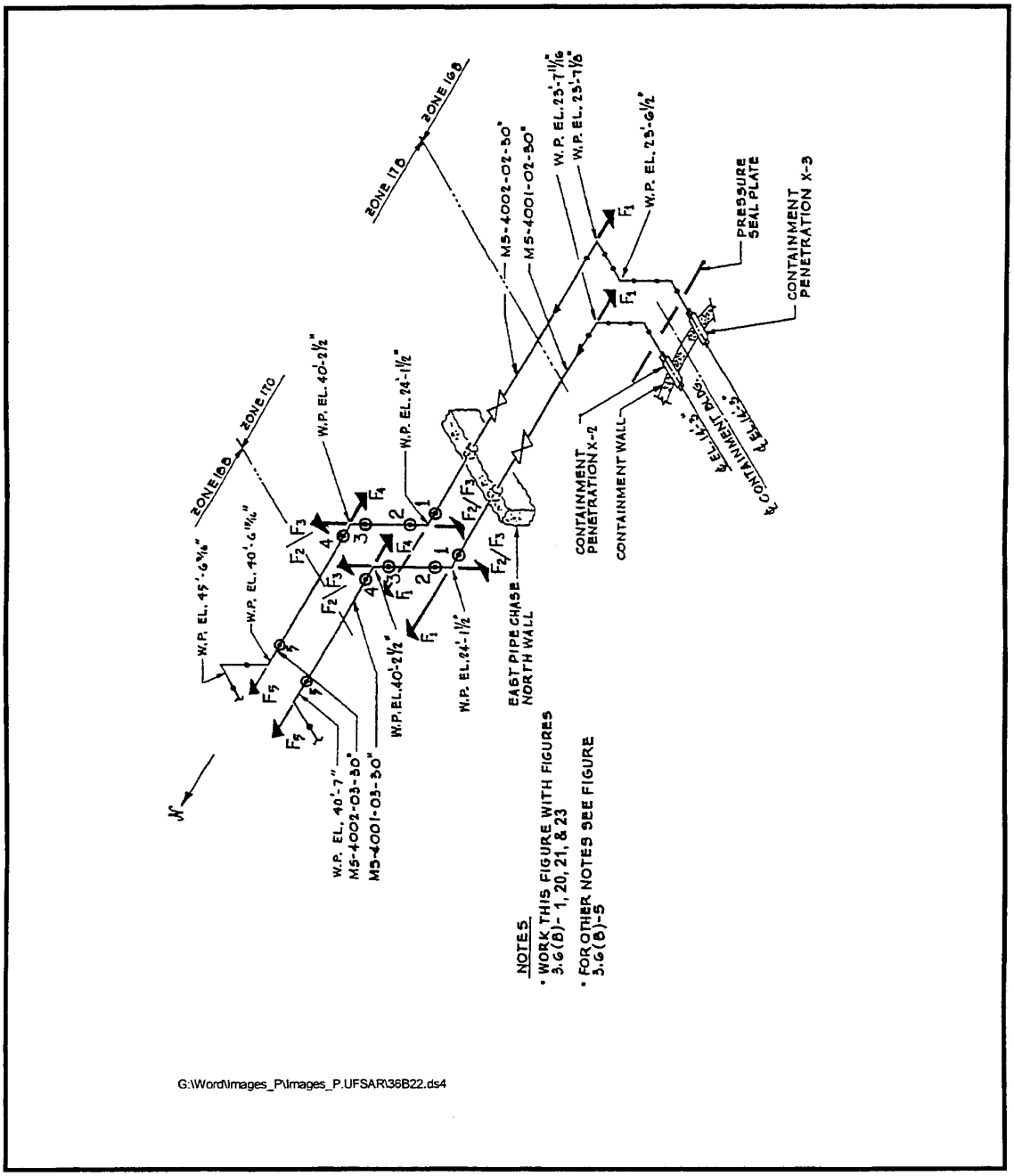

SEABROOK STATION UPDATED FINAL SAFETY ANALYSIS REPORT	Break and Thrust Locations Isometric for MS Pipes in East Pipe Chase	
		Figure 3.6(B)-22

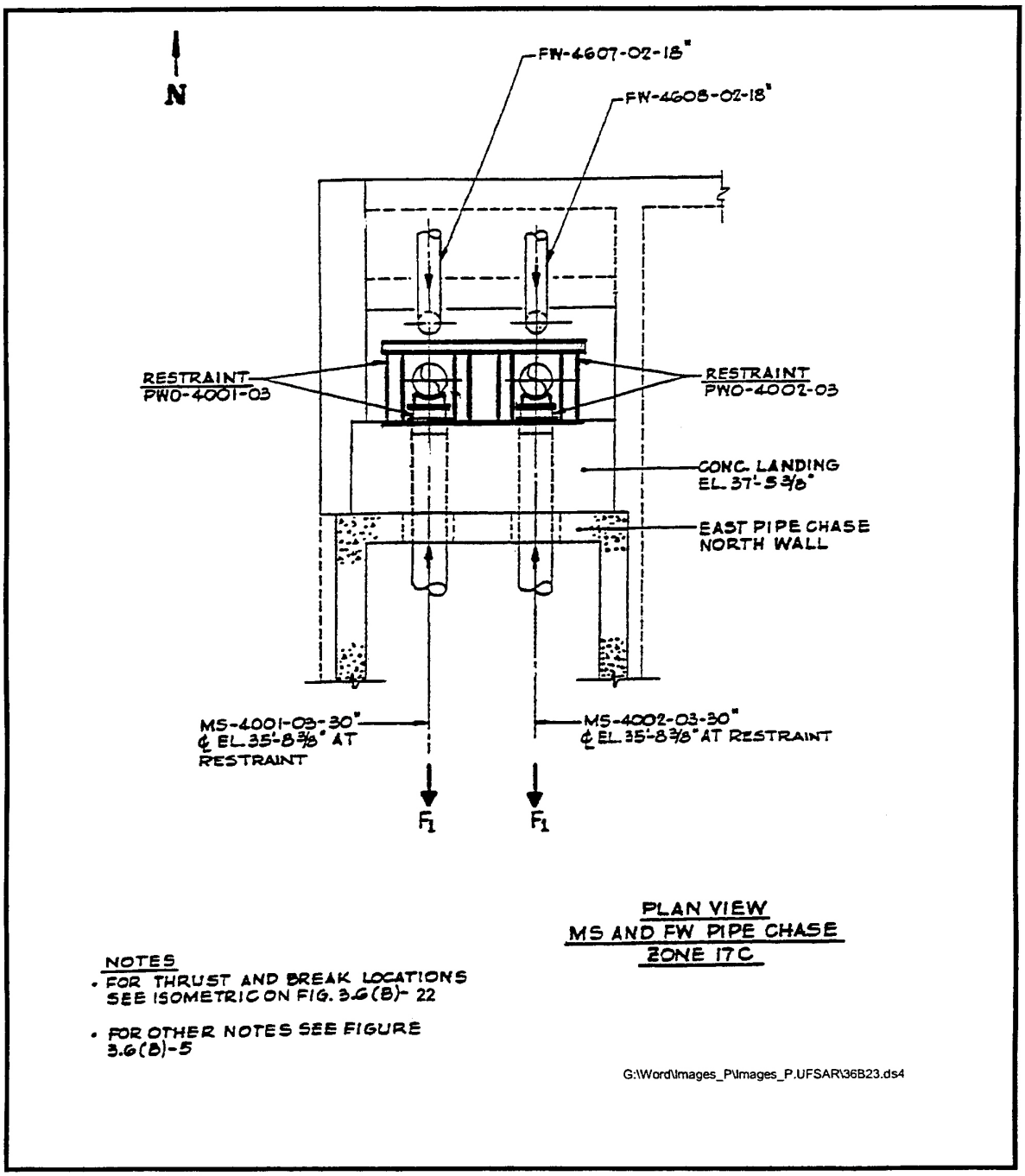

SEABROOK STATION UPDATED FINAL SAFETY ANALYSIS REPORT	Main Steam Pipe Whip Restraints Protecting West Pipe Chase North Wall - MS and FW Pipe Chase Zone 17C	
		Figure 3.6(B)-23

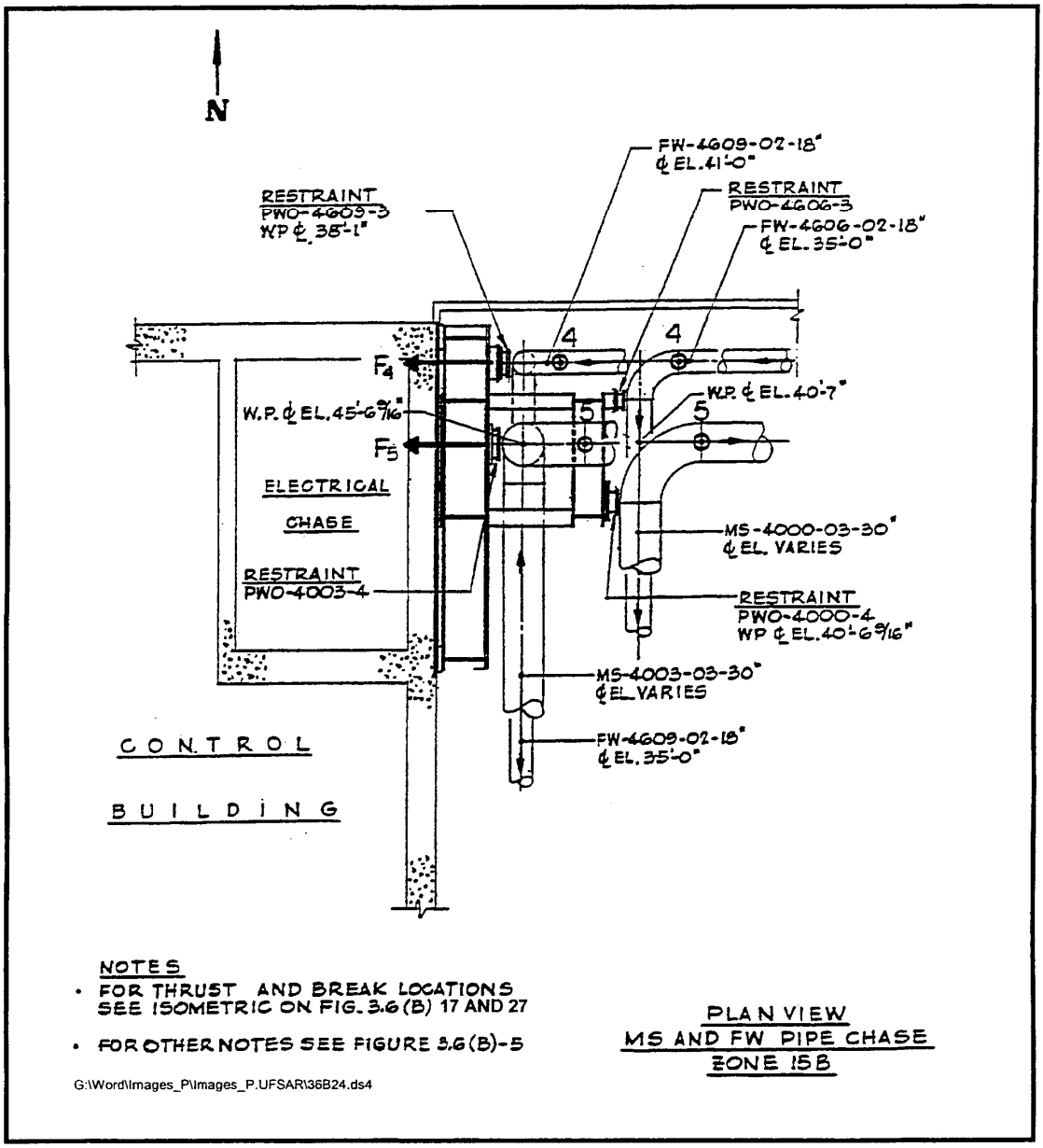

SEABROOK STATION UPDATED FINAL SAFETY ANALYSIS REPORT	Main Steam and Feedwater Pipe Whip Restraints Protecting East Wall of Control Building and Electrical Chase - MS and FW Pipe Chase Zone 15B	
		Figure 3.6(B)-24

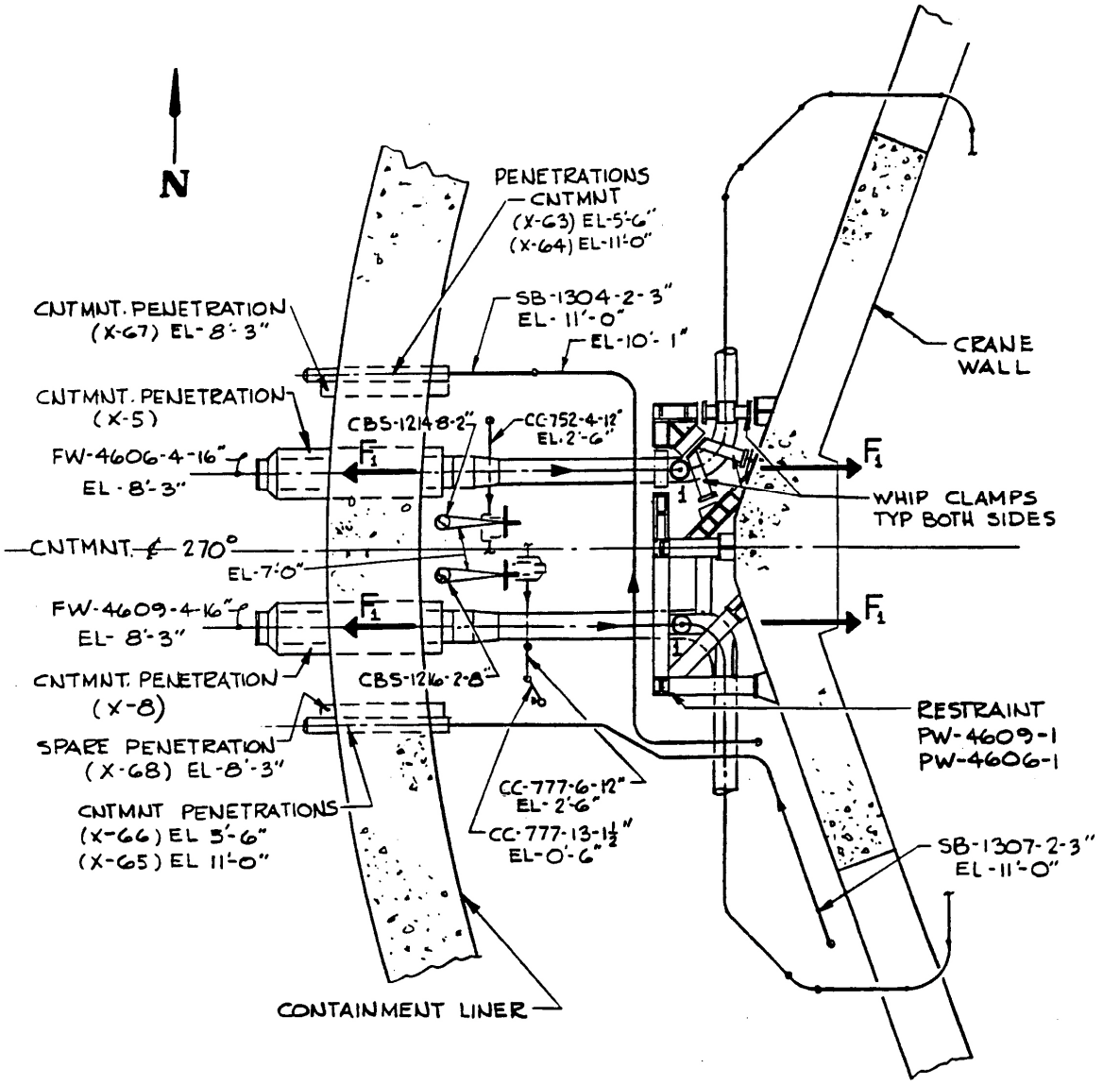

FOR NOTES SEE FIG. 3.6(B)-5

PLAN VIEW
CONTAINMENT ZONE 53C

SEABROOK STATION UPDATED FINAL SAFETY ANALYSIS REPORT	Feedwater Pipe Whip Restraint Protecting the Containment Liner and Penetrations and CC & SB Lines and Valves - Containment Zone 53C	
		Figure 3.6(B)-25

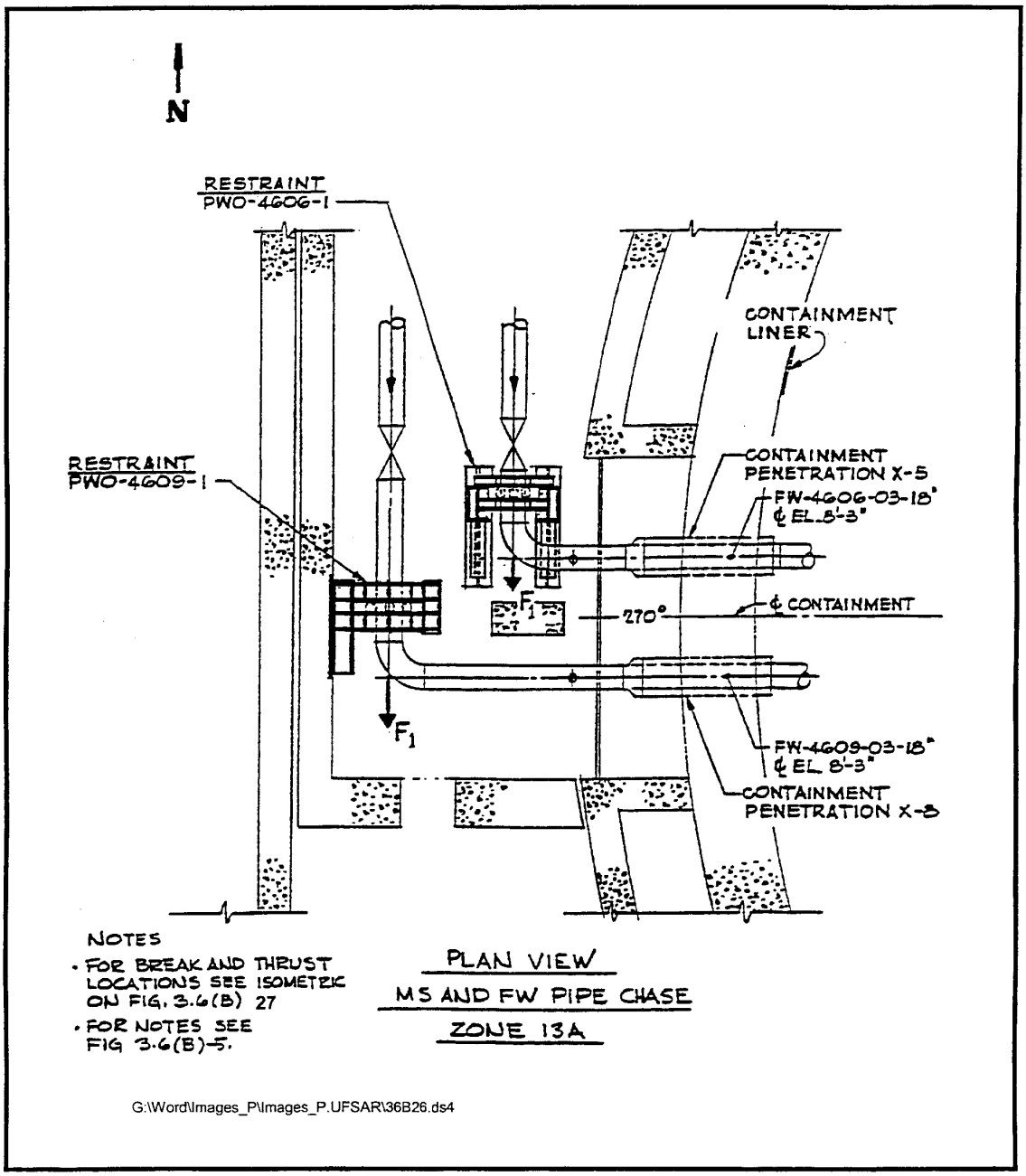

SEABROOK STATION UPDATED FINAL SAFETY ANALYSIS REPORT	Feedwater Pipe Whip Restraints Protecting Containment Liner and Penetrations - MS and FW Pipe Chase Zone 13A	
		Figure 3.6(B)-26

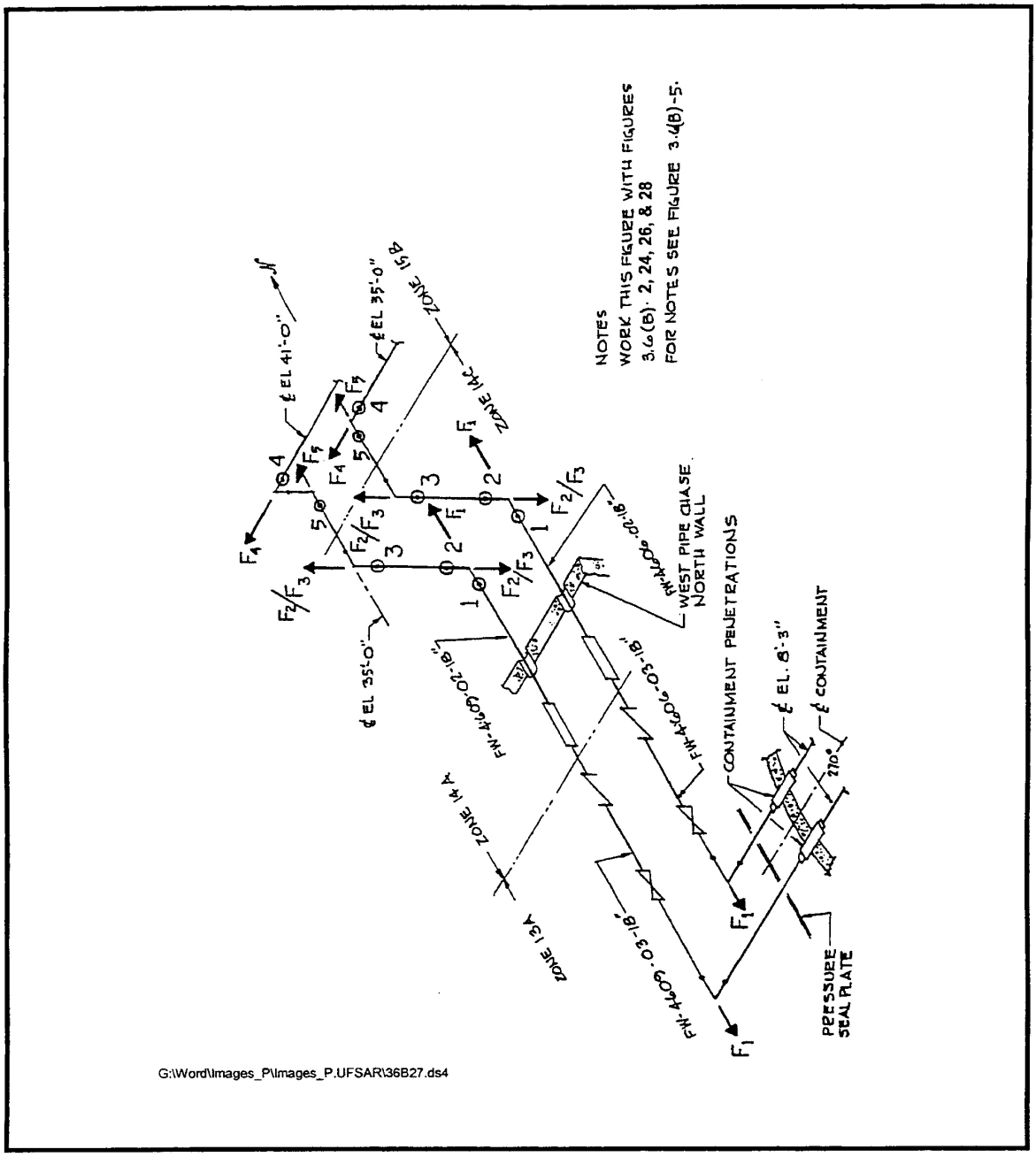

G:\Word\Images_P\Images_P.UFSAR\36B27.ds4

SEABROOK STATION UPDATED FINAL SAFETY ANALYSIS REPORT	Break and Thrust Locations Isometric for FW Pipes in West Pipe Chase	
		Figure 3.6(B)-27

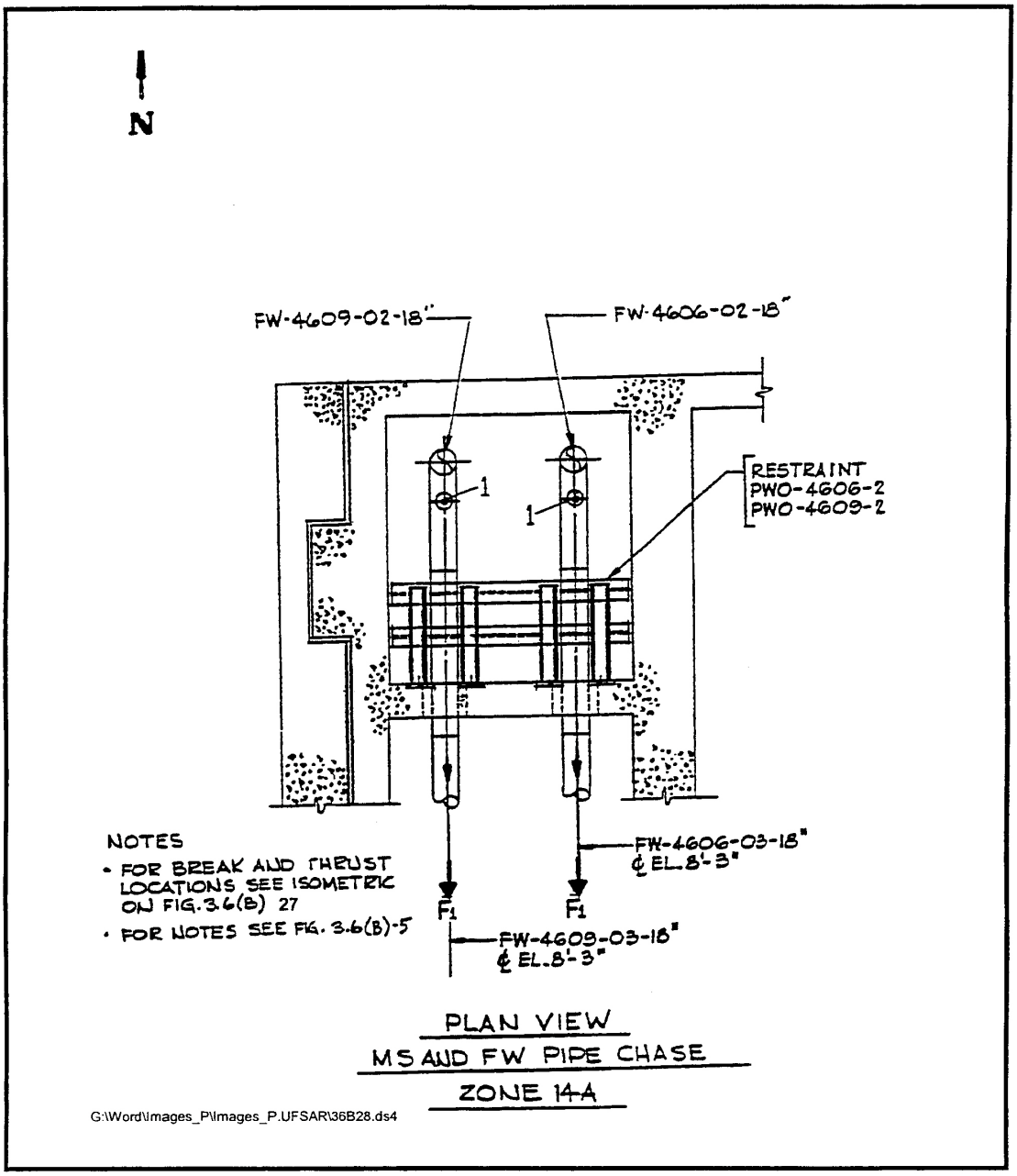

SEABROOK STATION UPDATED FINAL SAFETY ANALYSIS REPORT	Feedwater Pipe Whip Restraints Protecting Containment Liner and Penetrations - MS and FW Pipe Chase Zone 14A	
		Figure 3.6(B)-28

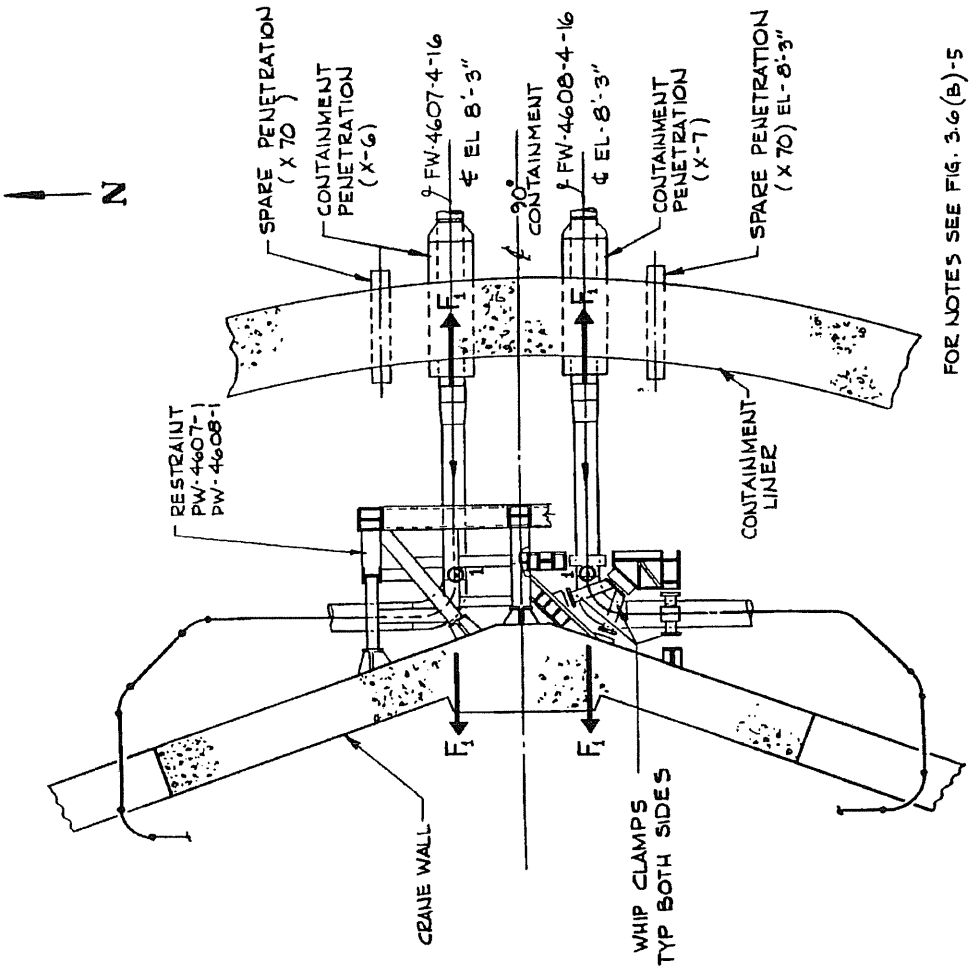

SEABROOK STATION UPDATED FINAL SAFETY ANALYSIS REPORT	Feedwater Pipe Whip Restraints Protecting Containment Liner and Penetrations - Containment Zone 55C	
		Figure 3.6(B)-29

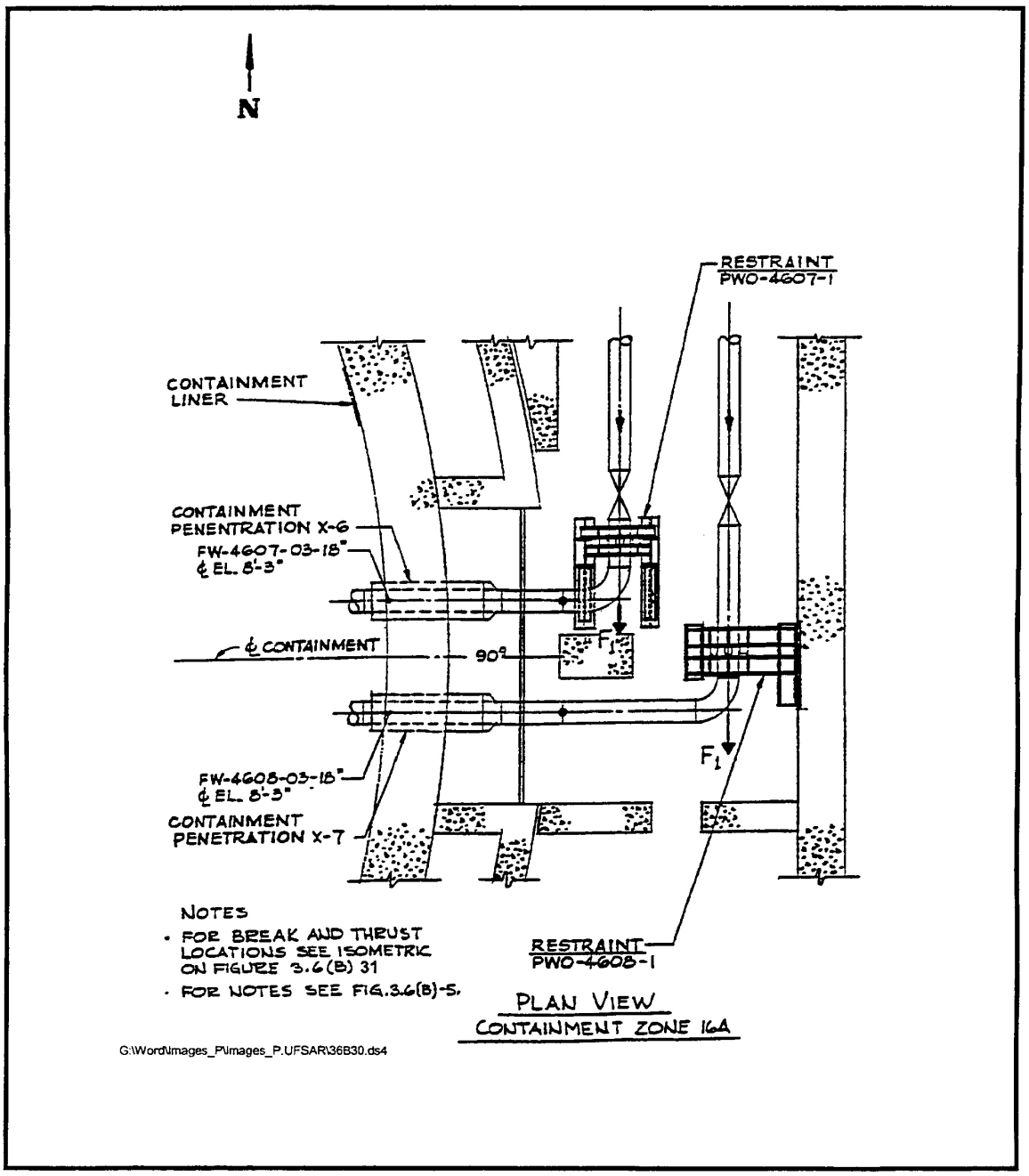

SEABROOK STATION UPDATED FINAL SAFETY ANALYSIS REPORT	Feedwater Pipe Whip Restraints Protecting Containment Liner and Penetrations - Containment Zone 16A	
		Figure 3.6(B)-30

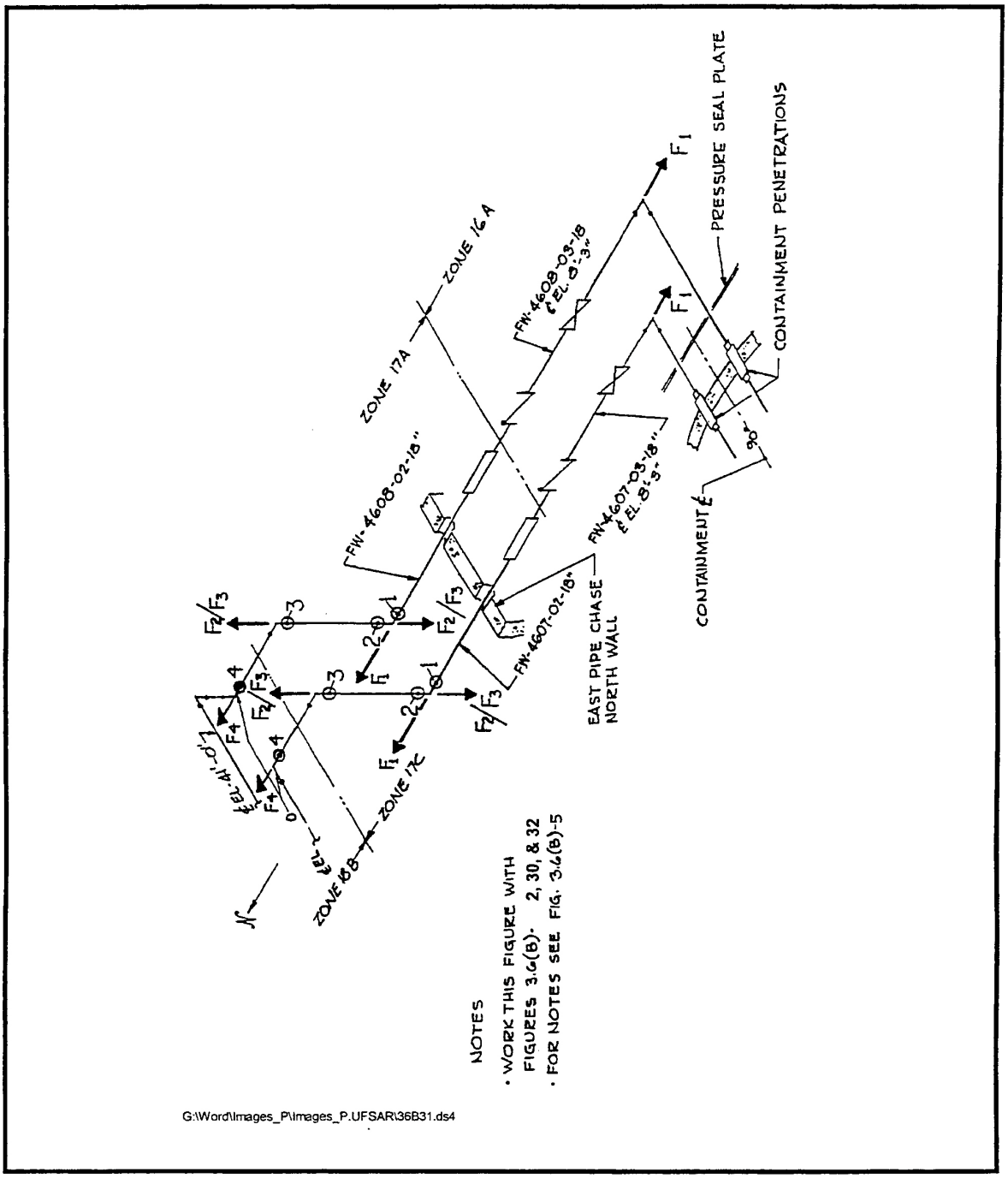

SEABROOK STATION UPDATED FINAL SAFETY ANALYSIS REPORT	Break and Thrust Locations Isometric for FW Pipes in East Chase	
		Figure 3.6(B)-31

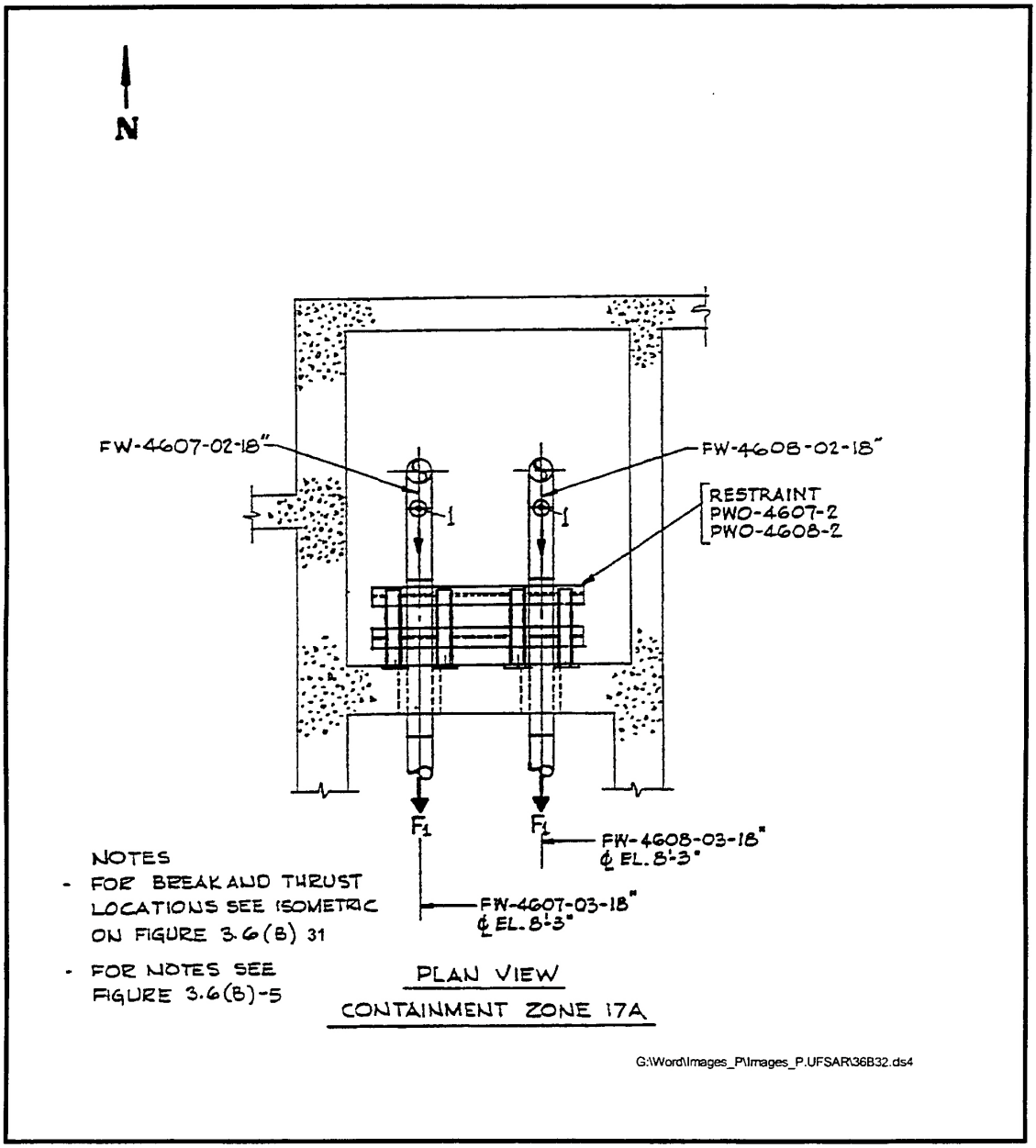

SEABROOK STATION UPDATED FINAL SAFETY ANALYSIS REPORT	Feedwater Pipe Whip Restraints Protecting Containment Liner and Penetrations - Containment Zone 17A	
		Figure 3.6(B)-32

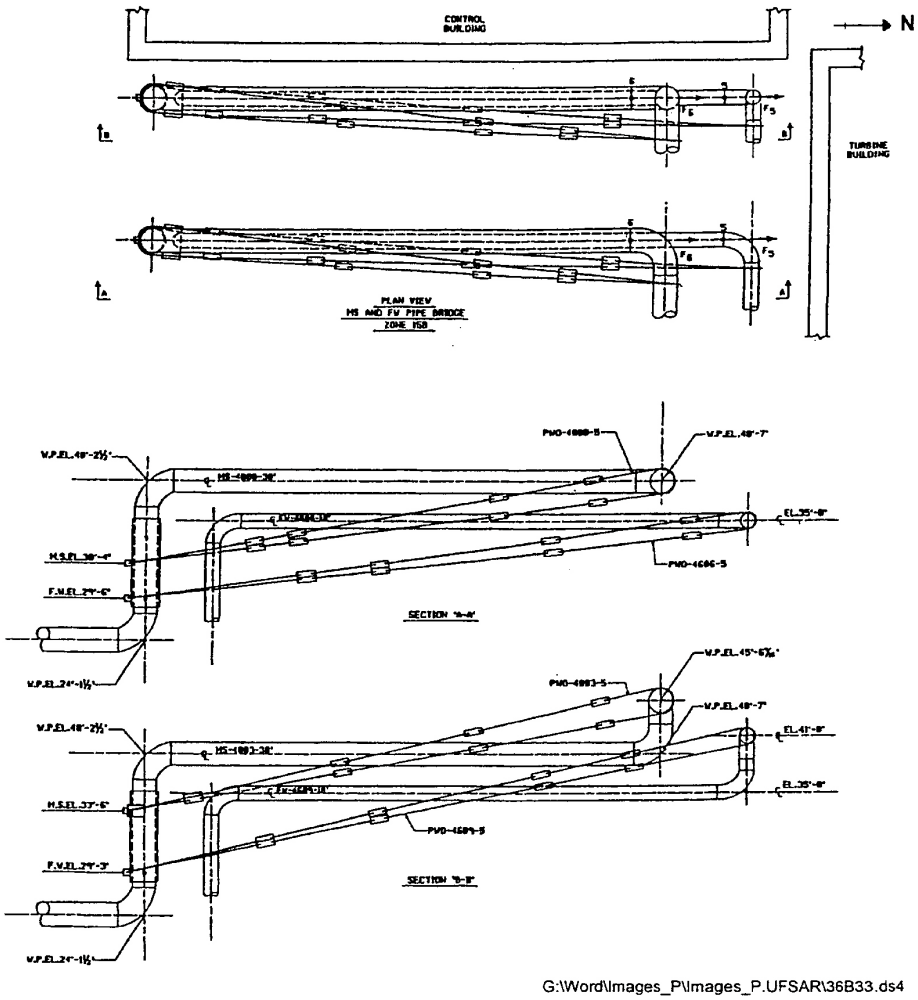

G:\Word\Images_P\Images_P.UFSAR\36B33.ds4

SEABROOK STATION UPDATED FINAL SAFETY ANALYSIS REPORT	Pipe Bridge West Main Steam and Feedwater Pipe Whip Restraints Protecting Turbine and Control Buildings	
		Figure 3.6(B)-33

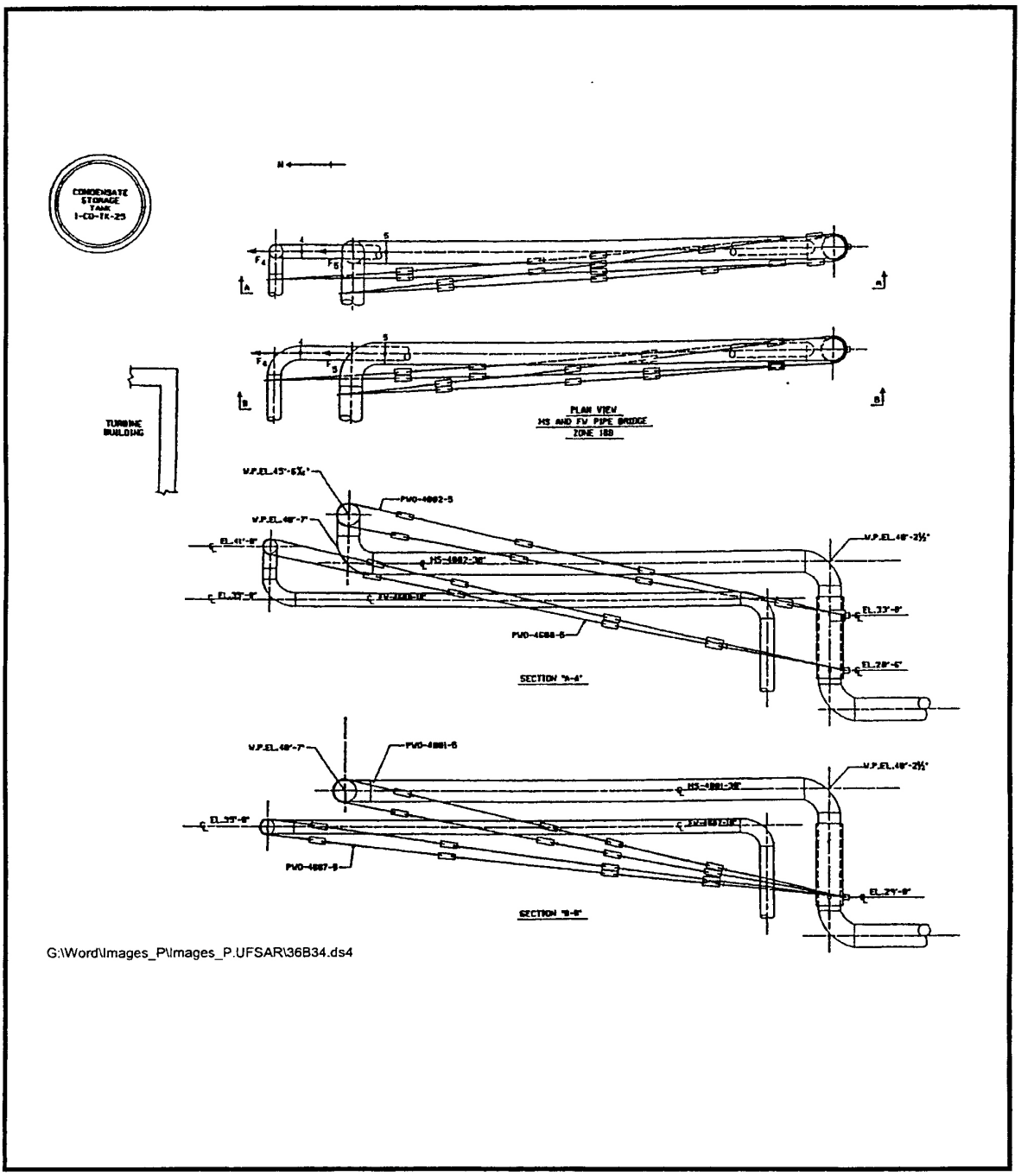

SEABROOK STATION UPDATED FINAL SAFETY ANALYSIS REPORT	Pipe Bridge East Main Steam and Feedwater Pipe Whip Restraints Protecting Turbine Building and Condensate Storage Tank	
		Figure 3.6(B)-34

CASE I

Outgoing Lines With Normally Closed Valve

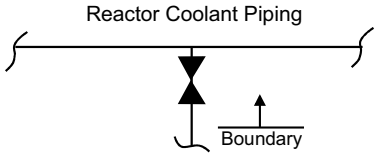

Note: Pressurizer Safety Valves Are Included Under This Case.

CASE II

Outgoing Lines With Normally Open Valve

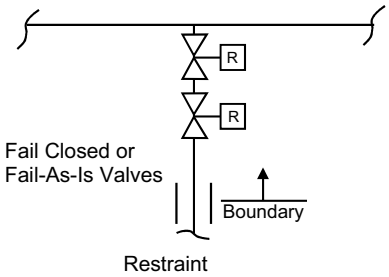

Note: The Reactor Coolant Pump No. 1 Seal Is Assumed To Be Equivalent To First Valve

CASE III

Incoming Lines Normally With Flow

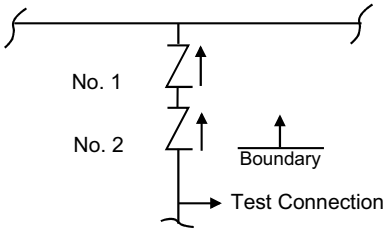

CASE IV

Incoming Lines Normally Without Flow

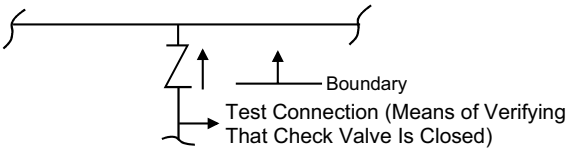

CASE V

All Instrumentation Tubing and Instruments Connected Directly to the Reacotor Coolant System is Considered as a Boundary. However, a Break Within this Boundary Results in a Relatively Small Flow Which Can Normally be Made Up With the Charging System.

G:\Word\Images_P\UFSAR\36N1.ds4

SEABROOK STATION UPDATED FINAL SAFETY ANALYSIS REPORT	Loss of Reactor Coolant Accident Boundary Limits	
		Figure 3.6(N)-1

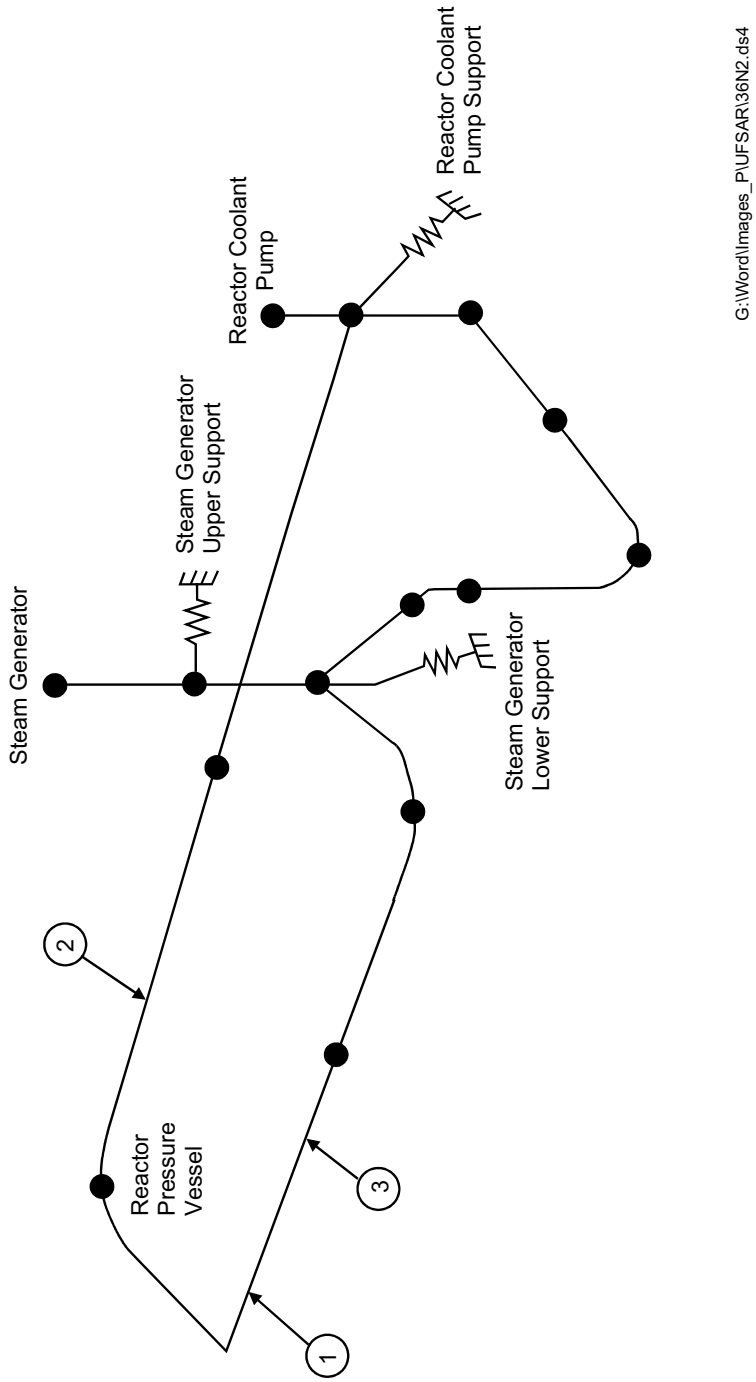

SEABROOK STATION UPDATED FINAL SAFETY ANALYSIS REPORT	Reactor Coolant System, Pipe Break and Whip Restraint Locations	
		Figure 3.6(N)-2

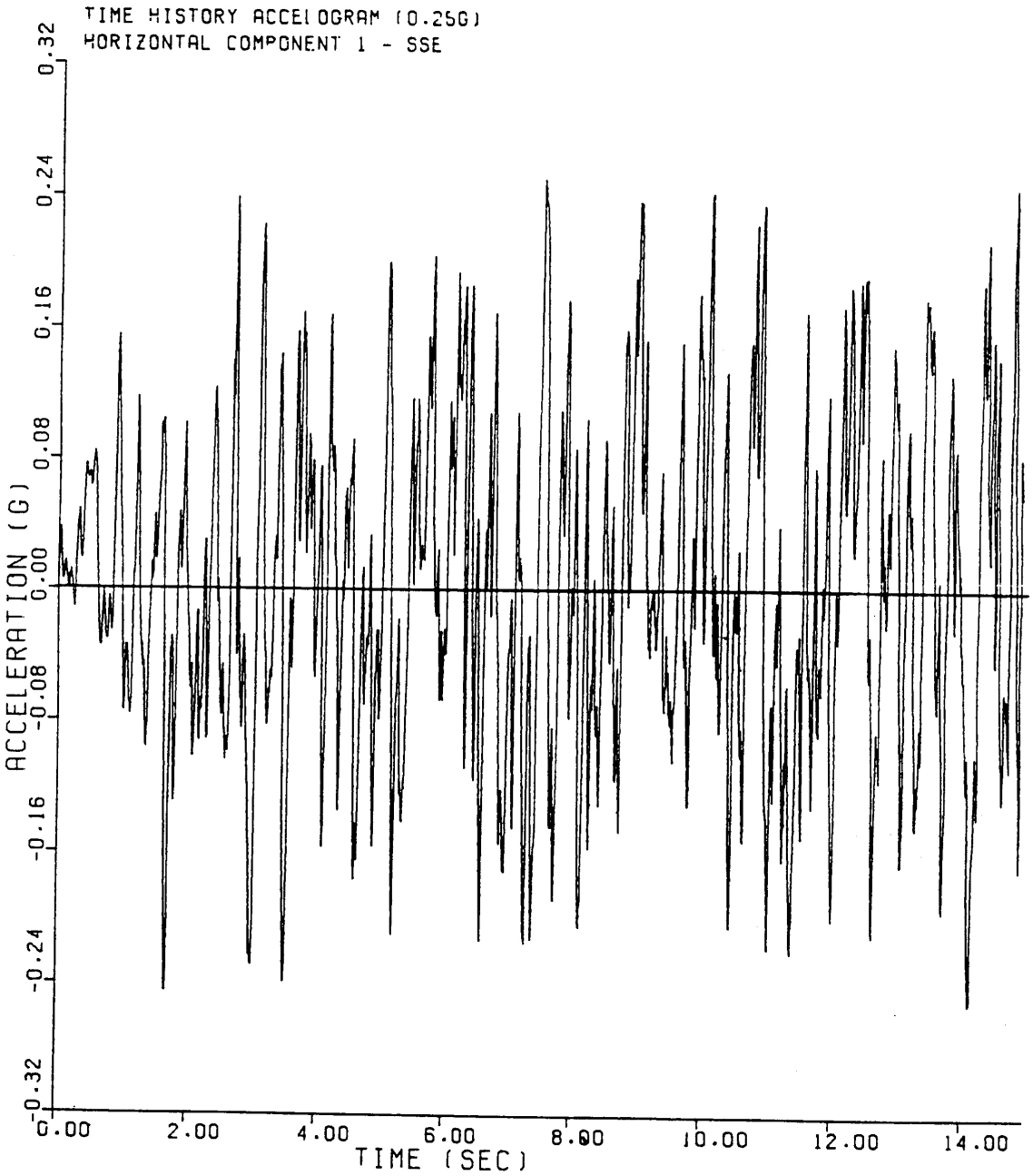

SEABROOK STATION UPDATED FINAL SAFETY ANALYSIS REPORT	Time History Accelogram (0.25g), Horizontal Component 1 - SSE	
		Figure 3.7(B)-1

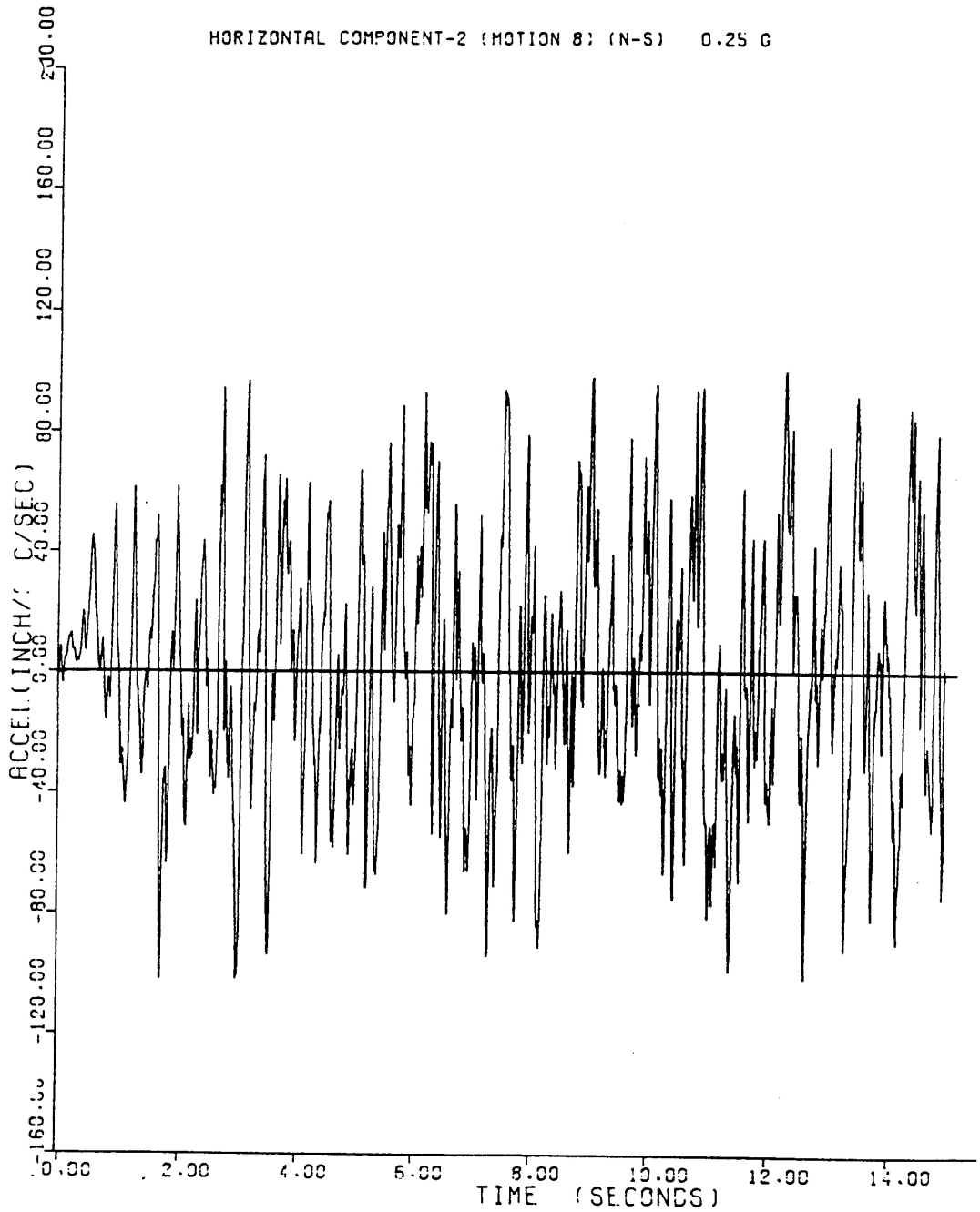

SEABROOK STATION UPDATED FINAL SAFETY ANALYSIS REPORT	Time History Accelogram (0.25g), Horizontal Component 2 - SSE	
		Figure 3.7(B)-2

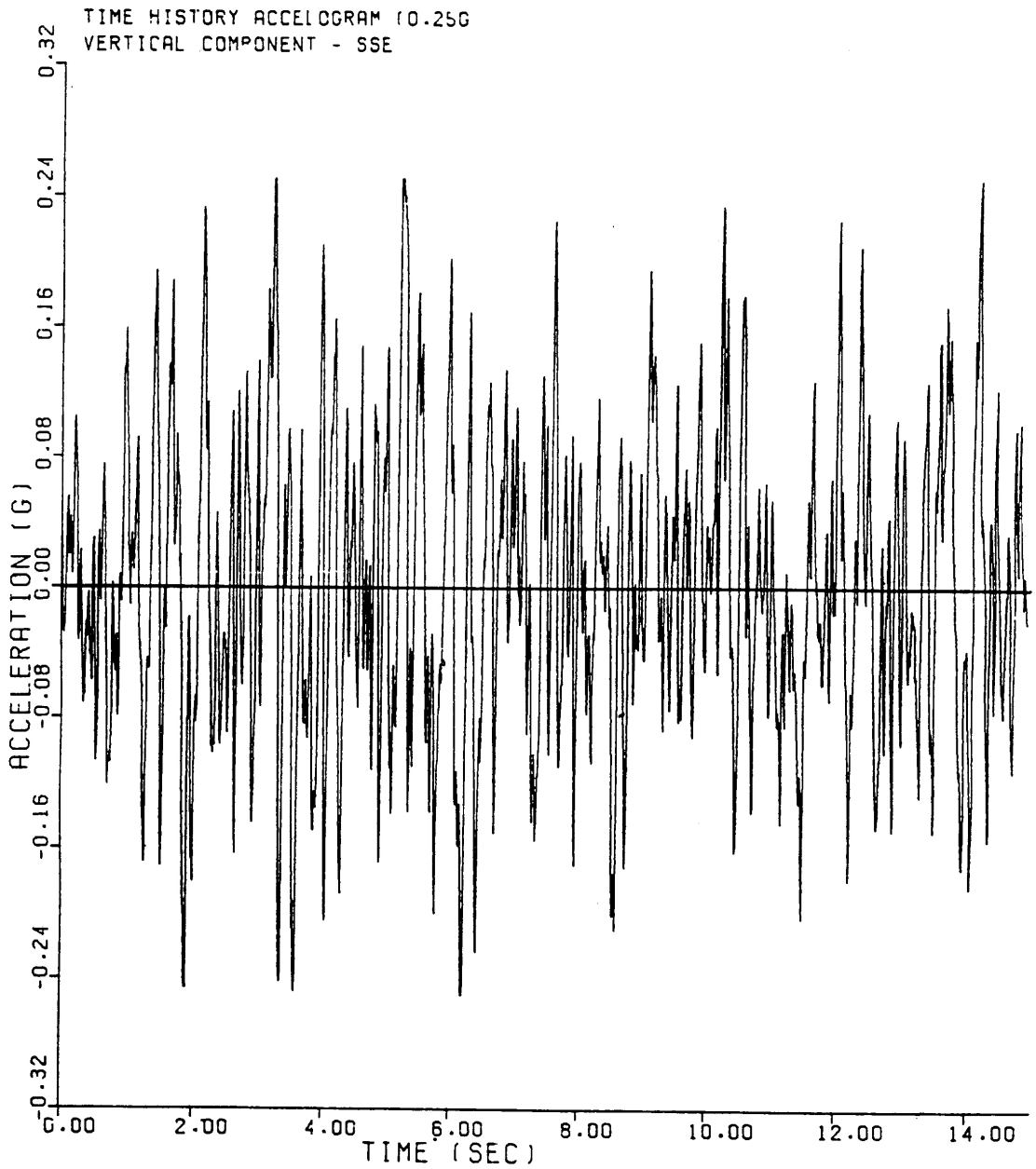

SEABROOK STATION UPDATED FINAL SAFETY ANALYSIS REPORT	Time History Accelogram (0.25g), Vertical Component - SSE	
		Figure 3.7(B)-3

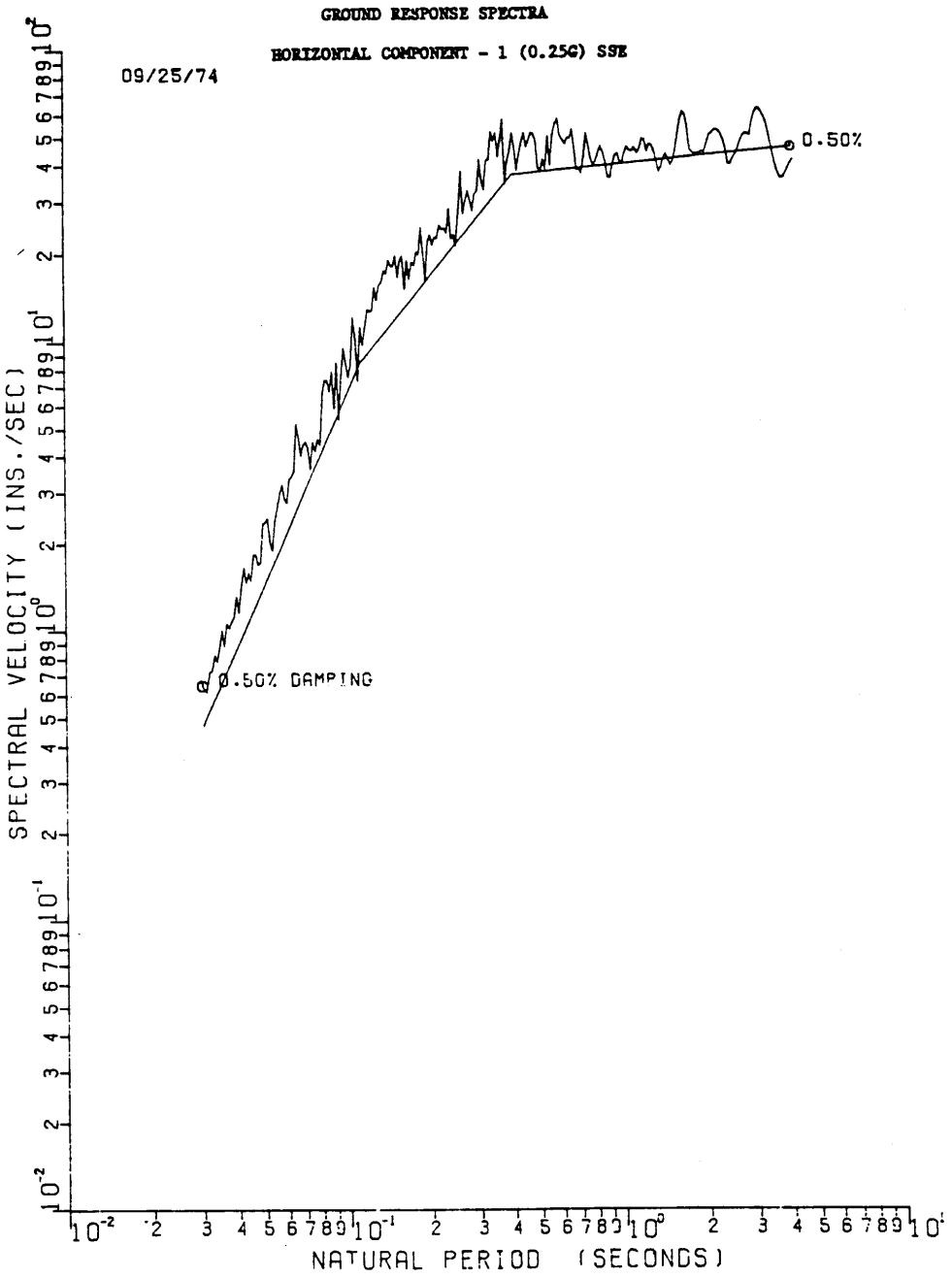

SEABROOK STATION UPDATED FINAL SAFETY ANALYSIS REPORT	0.50% Critical Damping Ground Response Spectrum, Horizontal Component 1 - SSE	
		Figure 3.7(B)-4

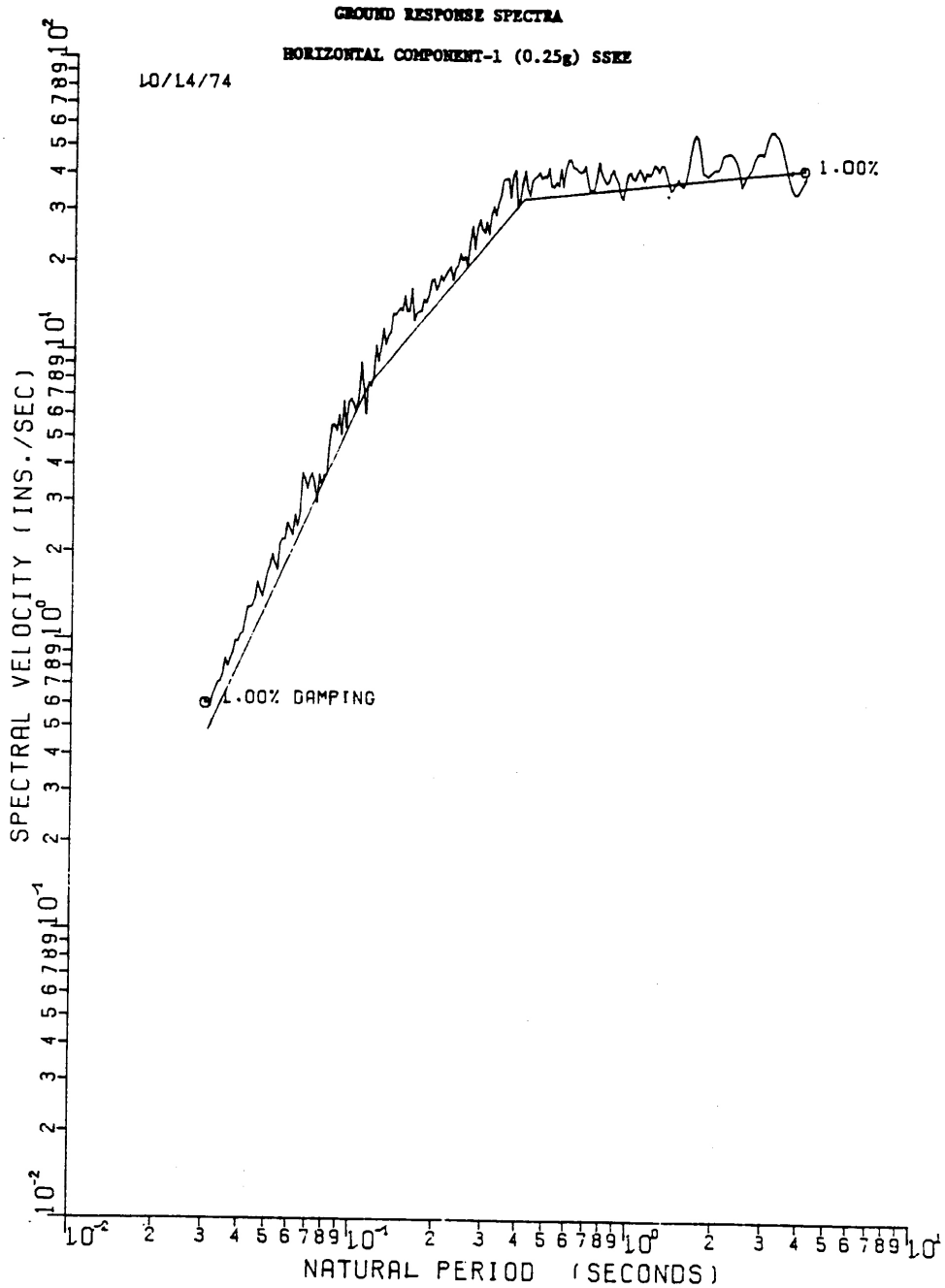

SEABROOK STATION UPDATED FINAL SAFETY ANALYSIS REPORT	1% Critical Damping Ground Response Spectrum, Horizontal Component 1 - SSE	
		Figure 3.7(B)-5

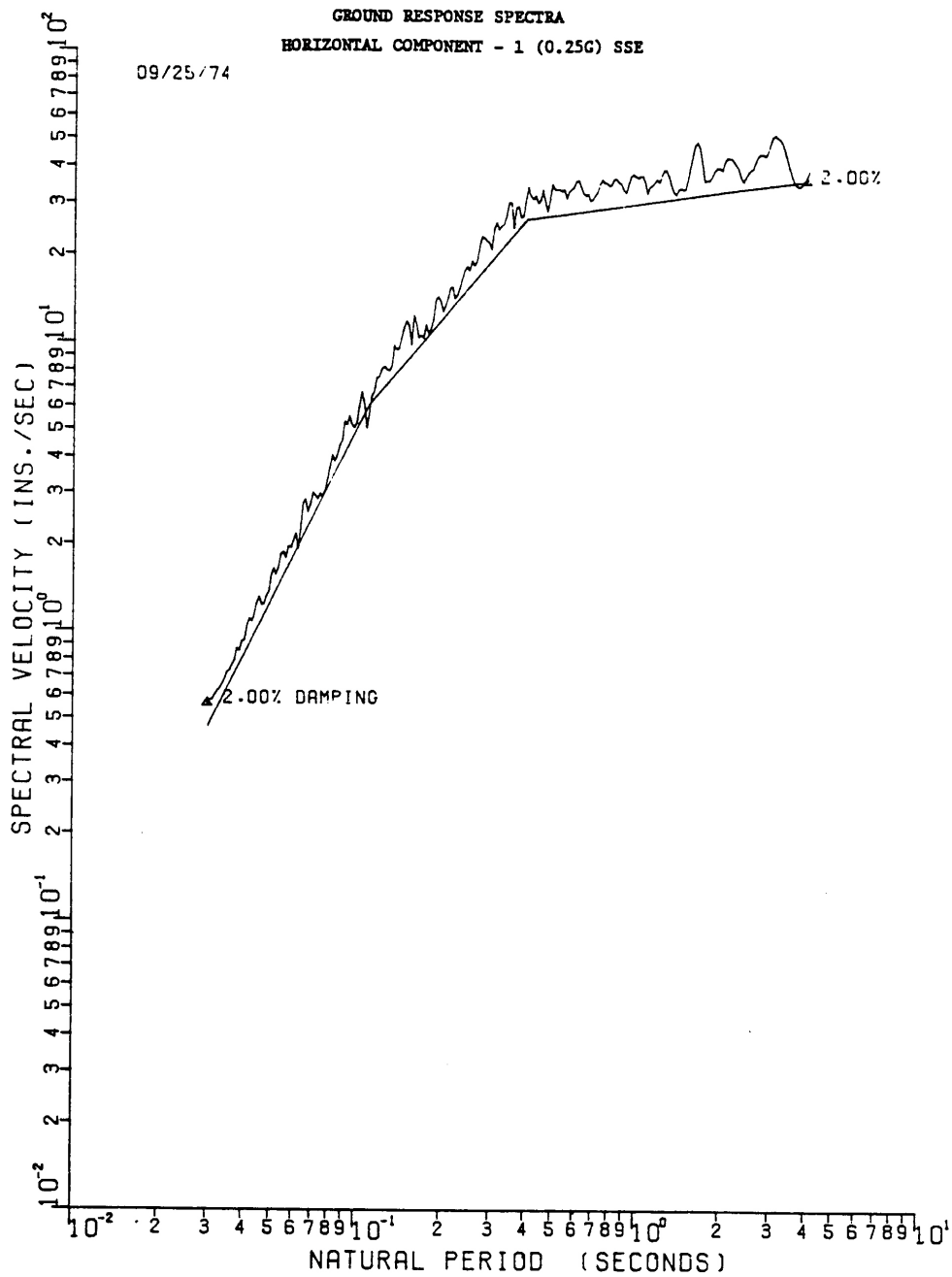

SEABROOK STATION UPDATED FINAL SAFETY ANALYSIS REPORT	2% Critical Damping Ground Response Spectrum, Horizontal Component 1 - SSE	
		Figure 3.7(B)-6

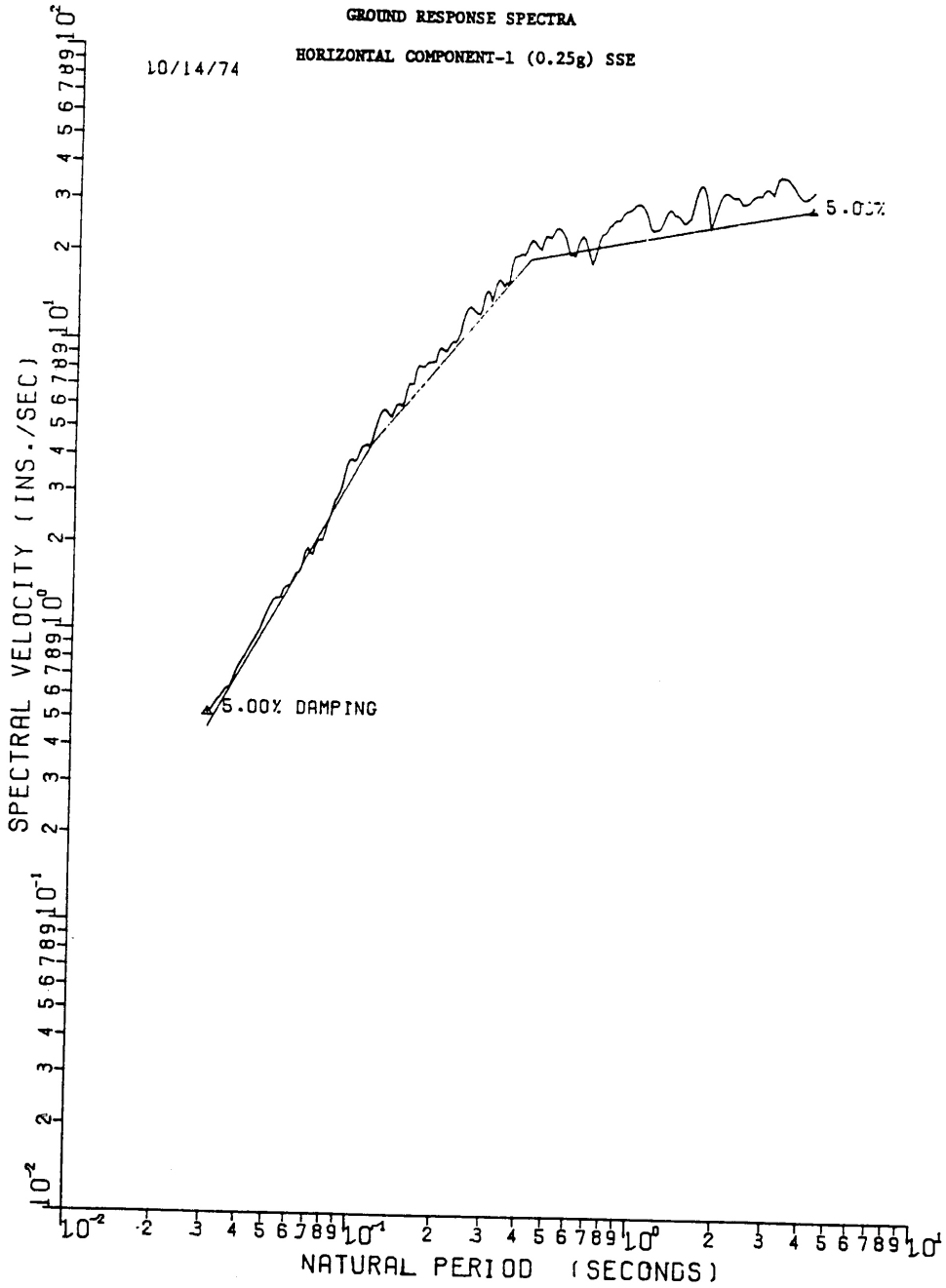

SEABROOK STATION UPDATED FINAL SAFETY ANALYSIS REPORT	5% Critical Damping Ground Response Spectrum, Horizontal Component 1 - SSE	
		Figure 3.7(B)-7

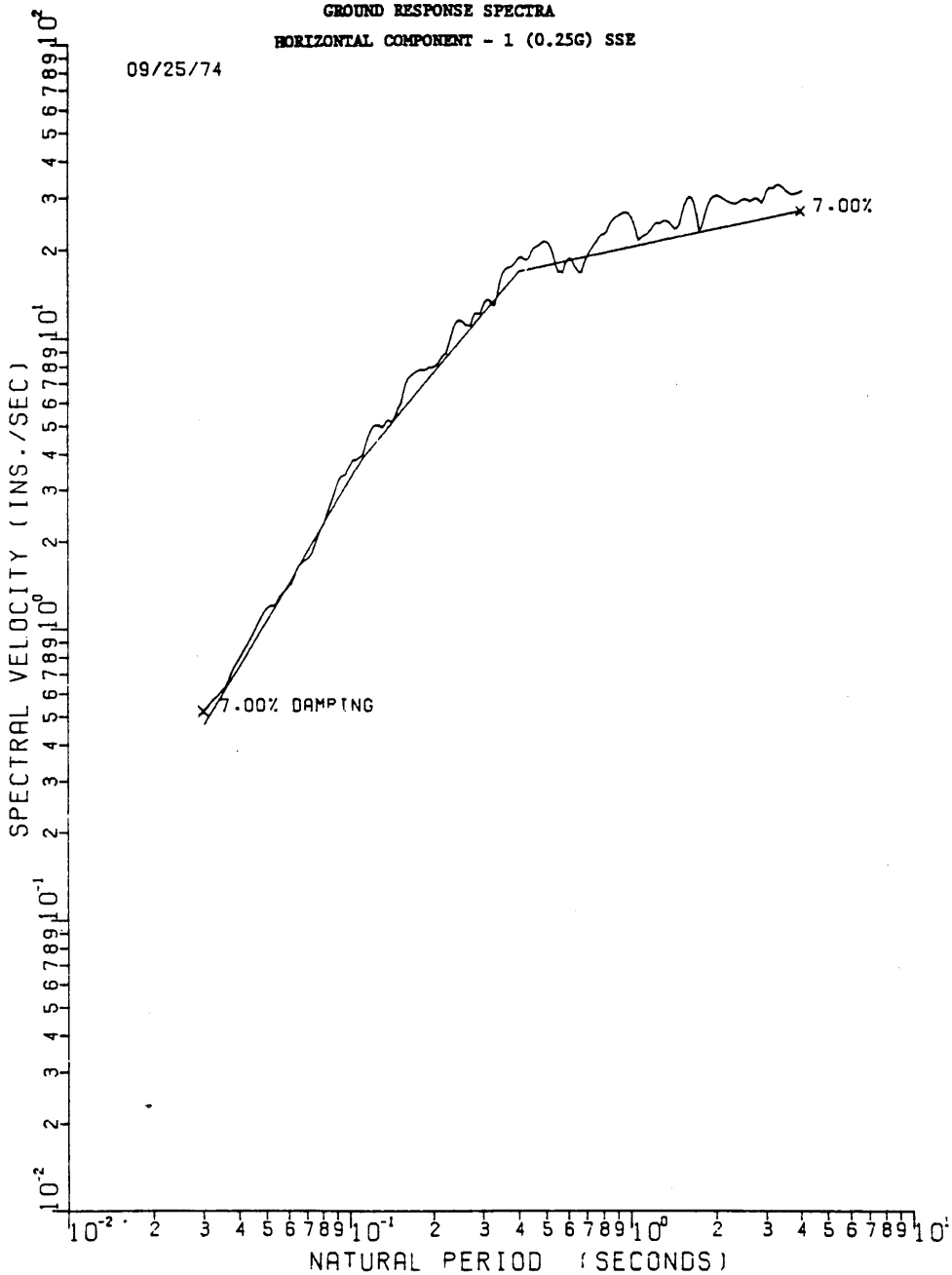

SEABROOK STATION UPDATED FINAL SAFETY ANALYSIS REPORT	7% Critical Damping Ground Response Spectrum, Horizontal Component 1 - SSE	
		Figure 3.7(B)-8

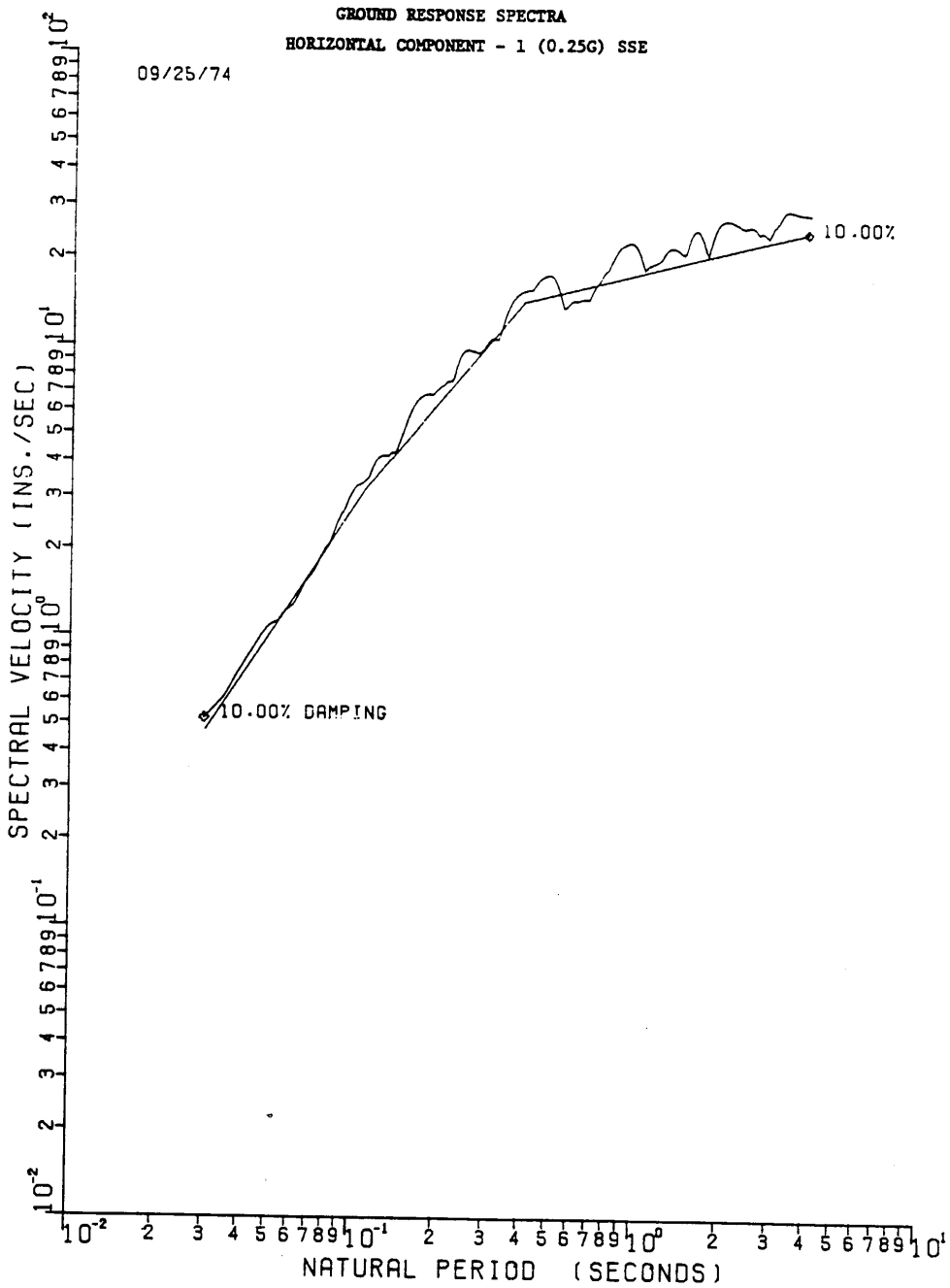

SEABROOK STATION UPDATED FINAL SAFETY ANALYSIS REPORT	10% Critical Damping Ground Response Spectrum, Horizontal Component 1 - SSE	
		Figure 3.7(B)-9

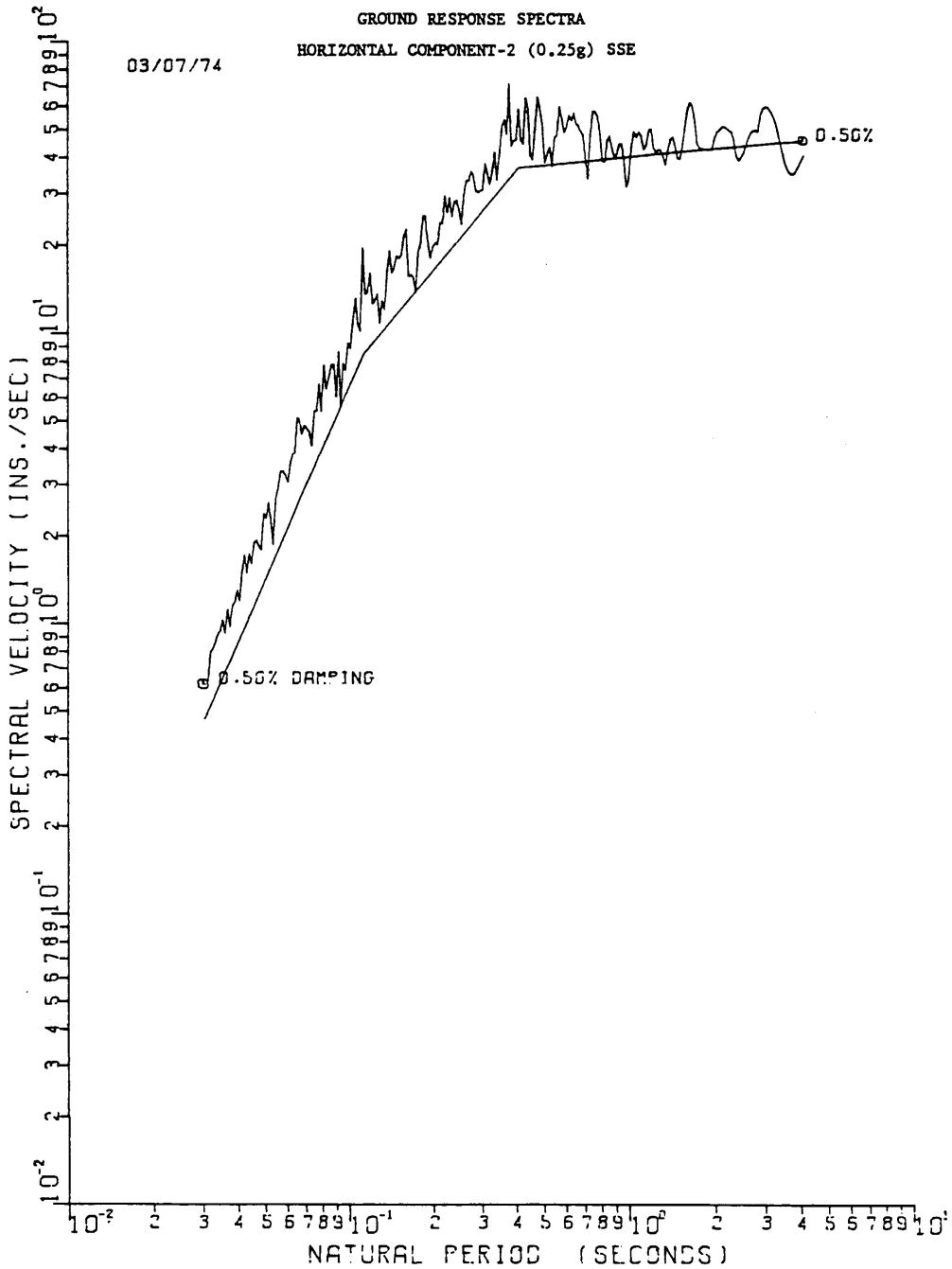

SEABROOK STATION UPDATED FINAL SAFETY ANALYSIS REPORT	0.5% Critical Damping Ground Response Spectrum, Horizontal Component 2 - SSE	
		Figure 3.7(B)-10

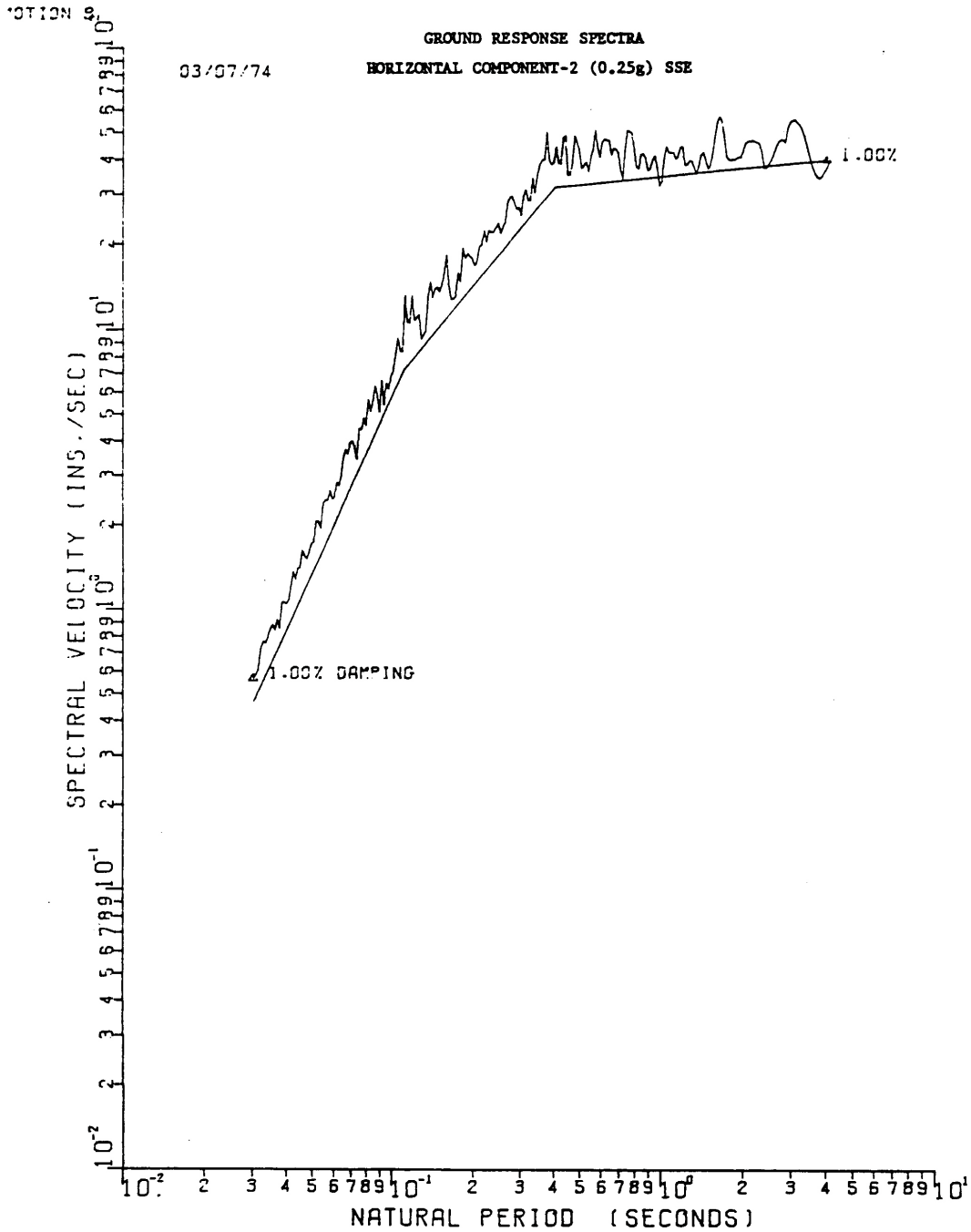

SEABROOK STATION UPDATED FINAL SAFETY ANALYSIS REPORT	1% Critical Damping Ground Response Spectrum, Horizontal Component 2 - SSE	
		Figure 3.7(B)-11

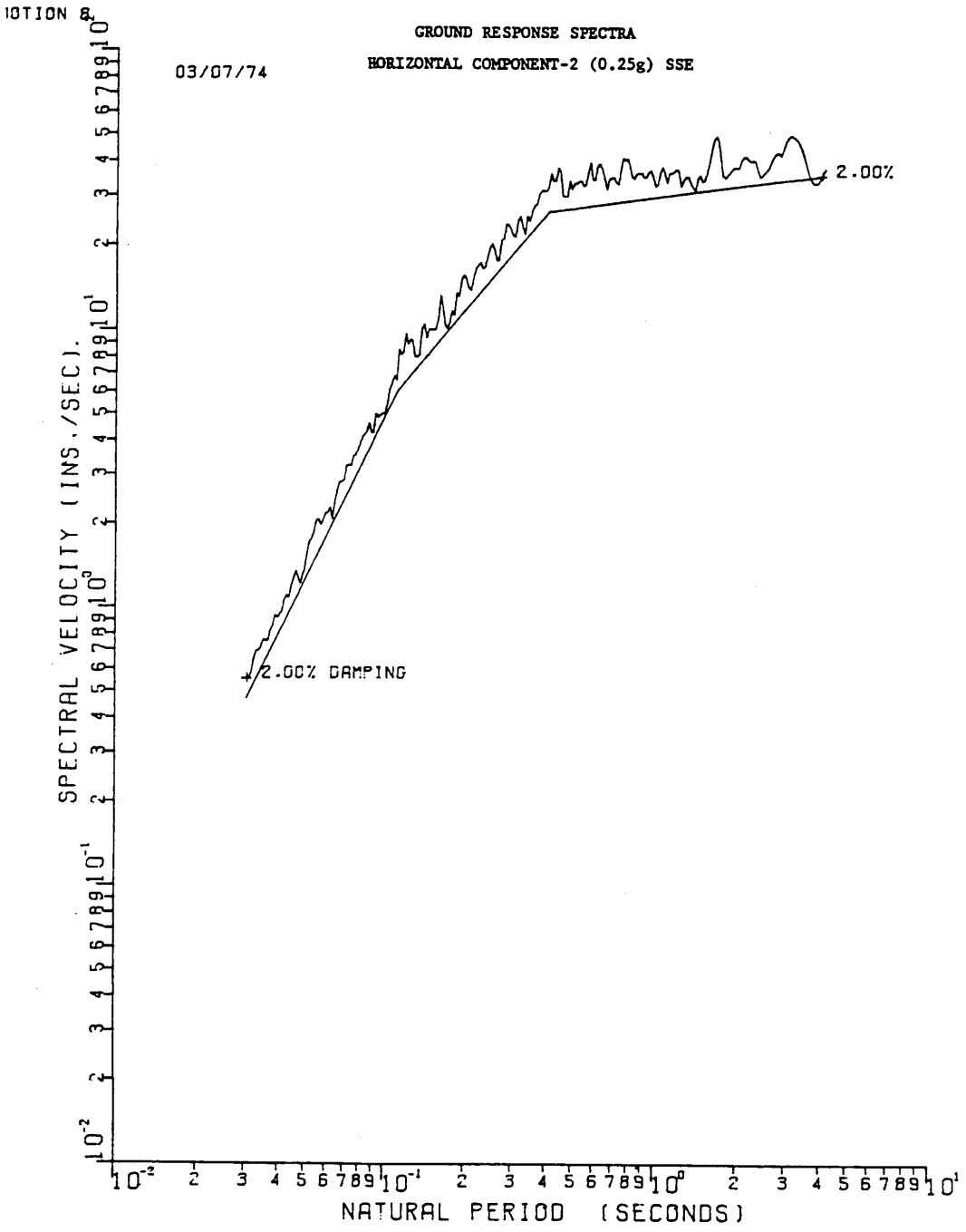

SEABROOK STATION UPDATED FINAL SAFETY ANALYSIS REPORT	2% Critical Damping Ground Response Spectrum, Horizontal Component 2 - SSE	
		Figure 3.7(B)-12

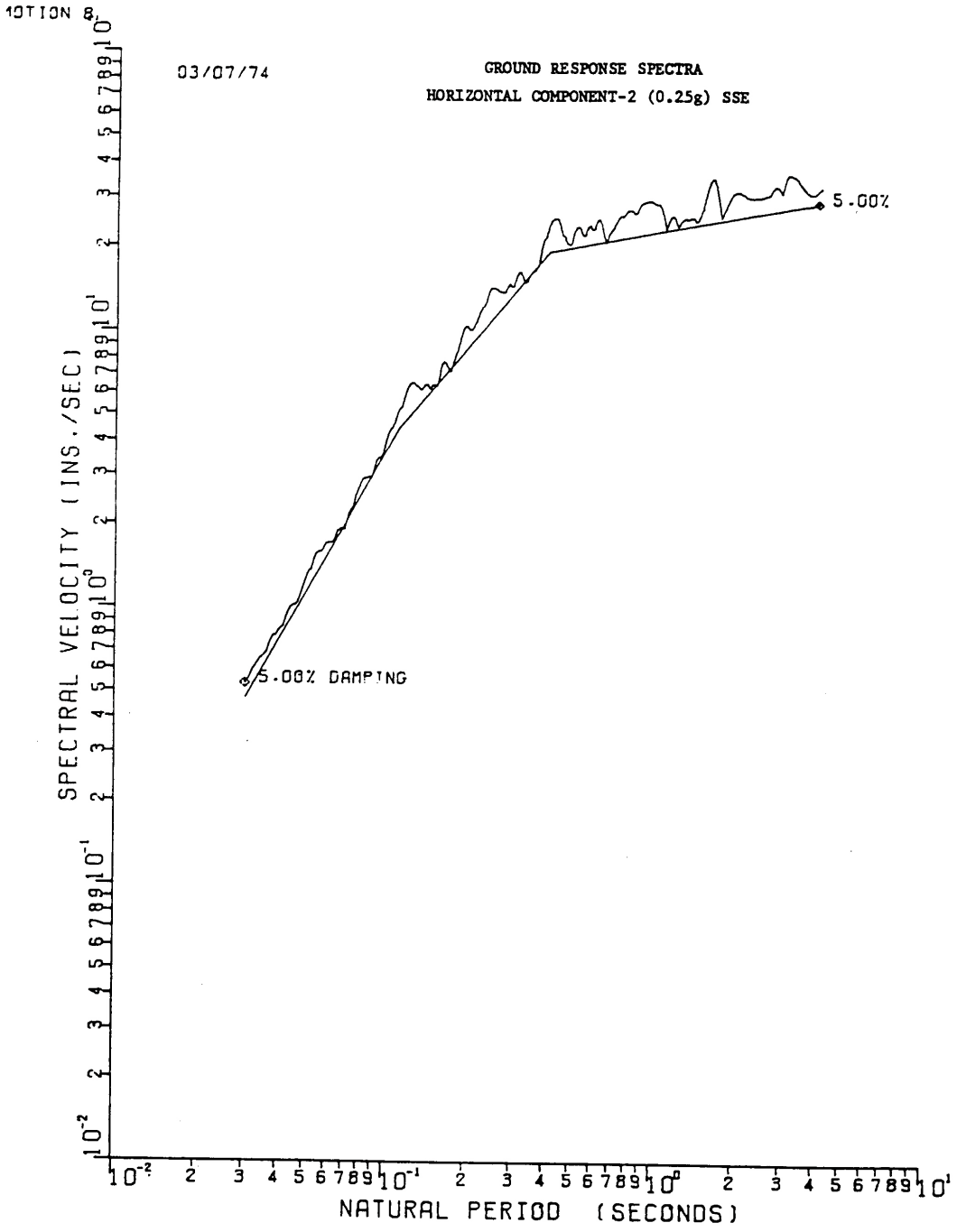

SEABROOK STATION UPDATED FINAL SAFETY ANALYSIS REPORT	5% Critical Damping Ground Response Spectrum, Horizontal Component 2 - SSE	
		Figure 3.7(B)-13

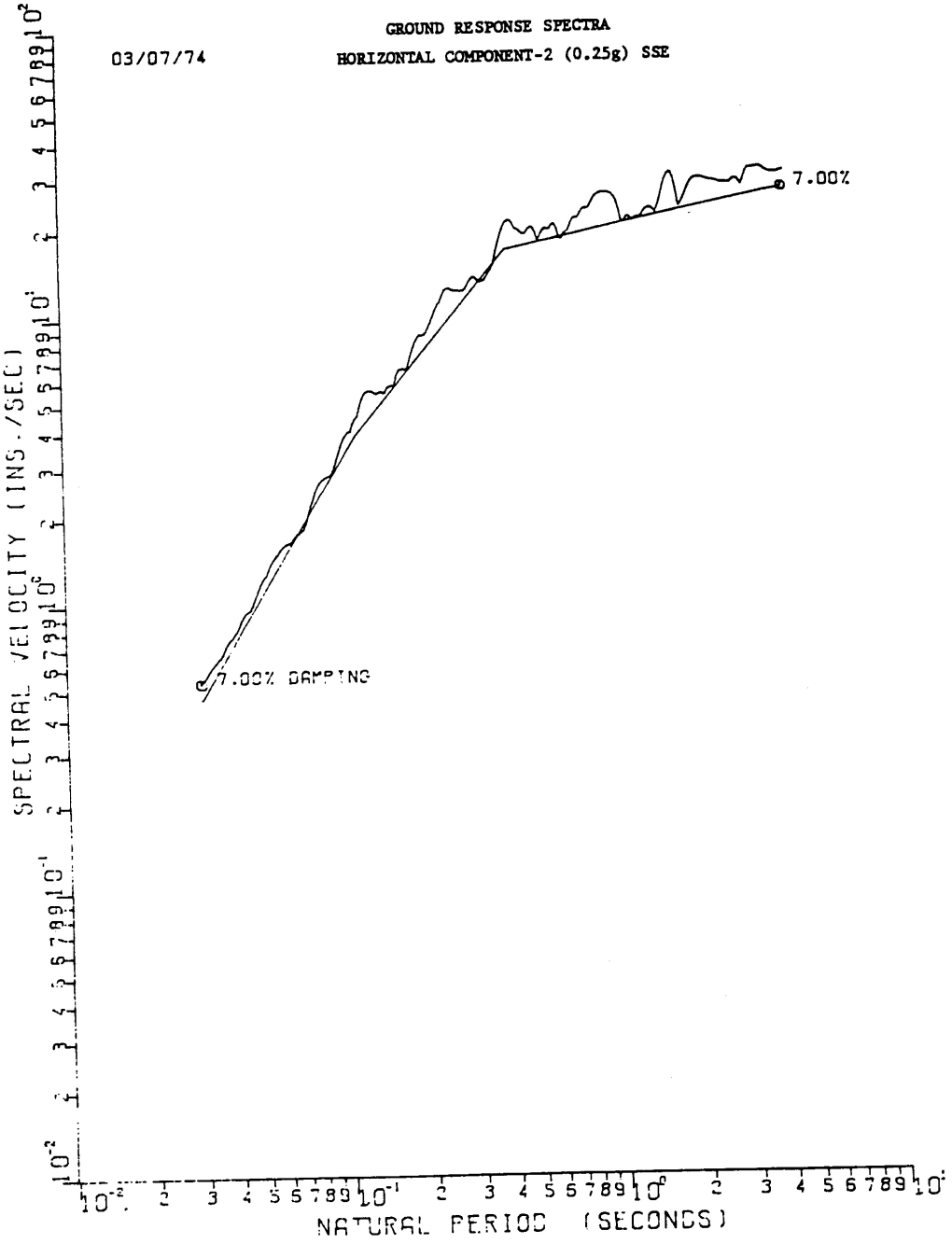

SEABROOK STATION UPDATED FINAL SAFETY ANALYSIS REPORT	7% Critical Damping Ground Response Spectrum, Horizontal Component 2 - SSE	
		Figure 3.7(B)-14

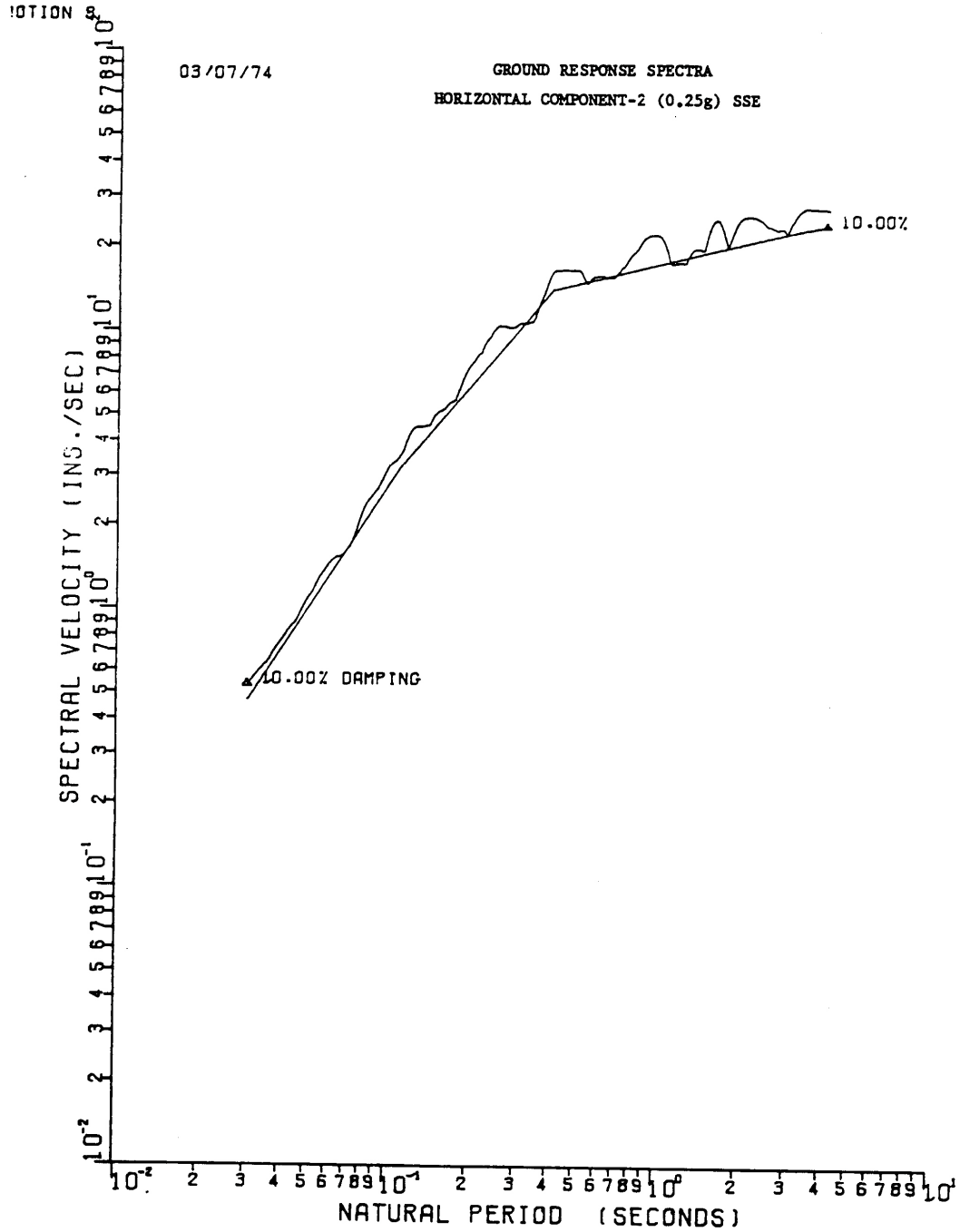

SEABROOK STATION UPDATED FINAL SAFETY ANALYSIS REPORT	10% Critical Damping Ground Response Spectrum, Horizontal Component 2 - SSE	
		Figure 3.7(B)-15

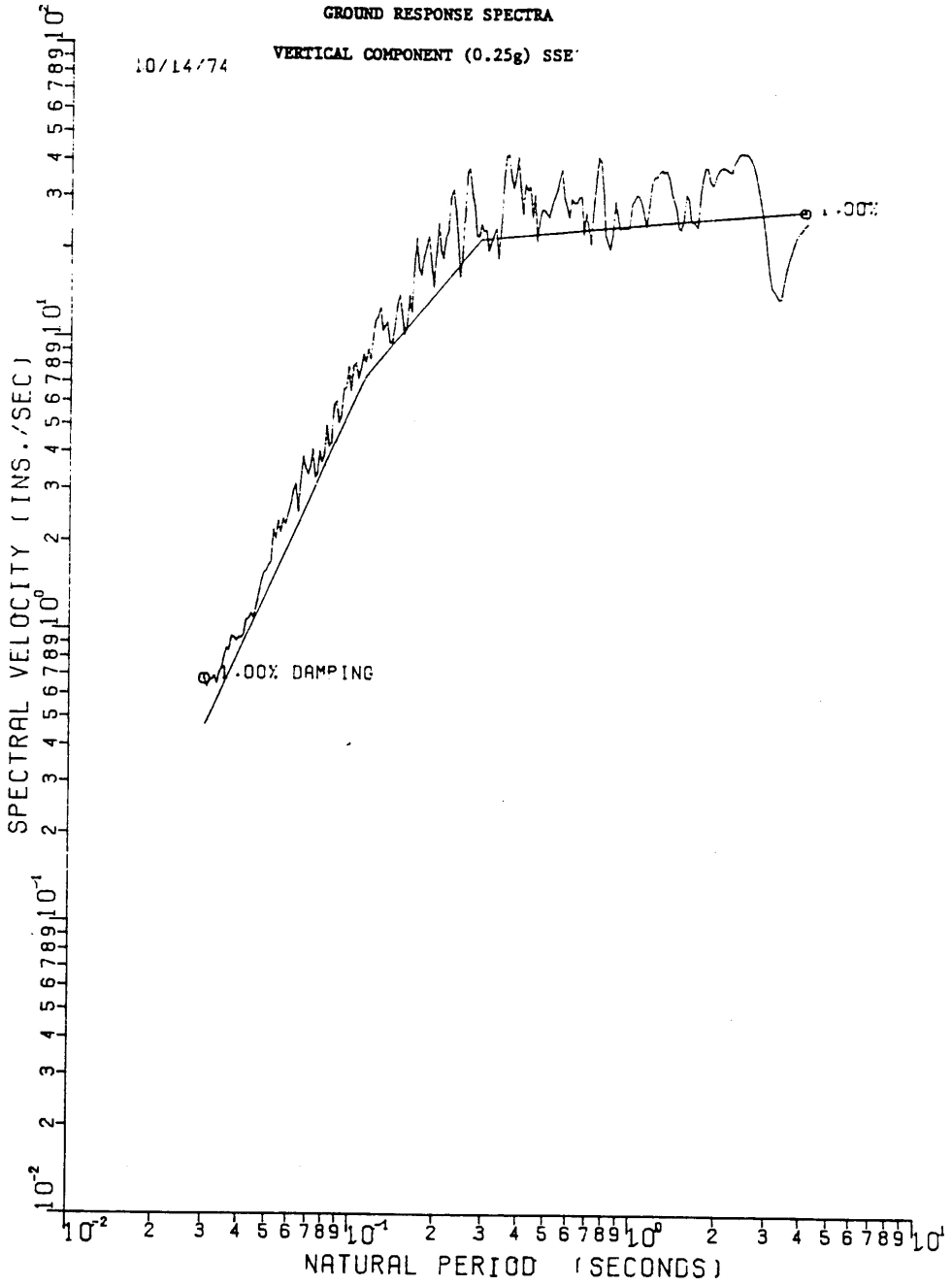

SEABROOK STATION UPDATED FINAL SAFETY ANALYSIS REPORT	1% Critical Damping Ground Response Spectrum, Vertical Component - SSE	
		Figure 3.7(B)-16

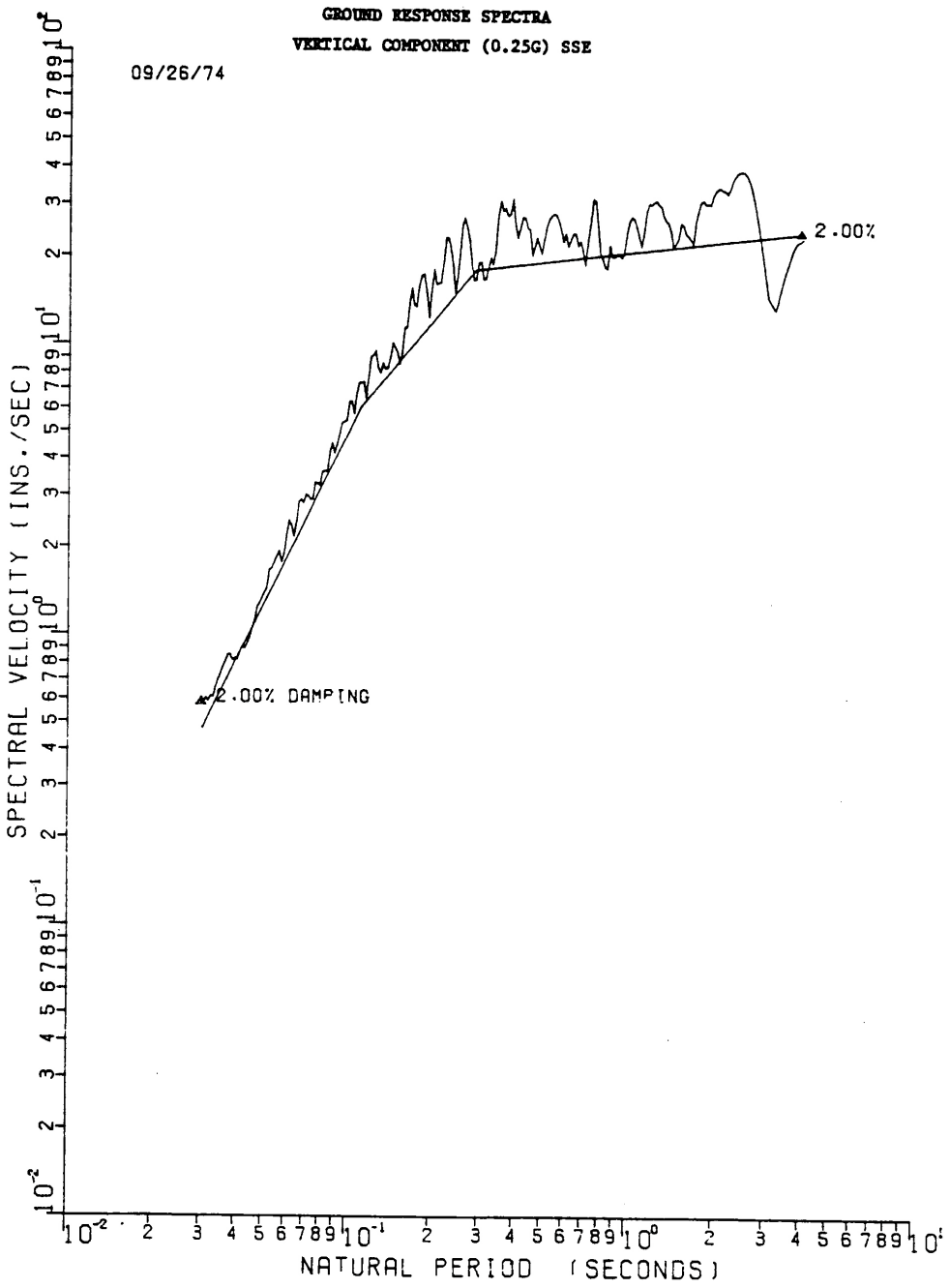

SEABROOK STATION UPDATED FINAL SAFETY ANALYSIS REPORT	2% Critical Damping Ground Response Spectrum, Vertical Component - SSE	
		Figure 3.7(B)-17

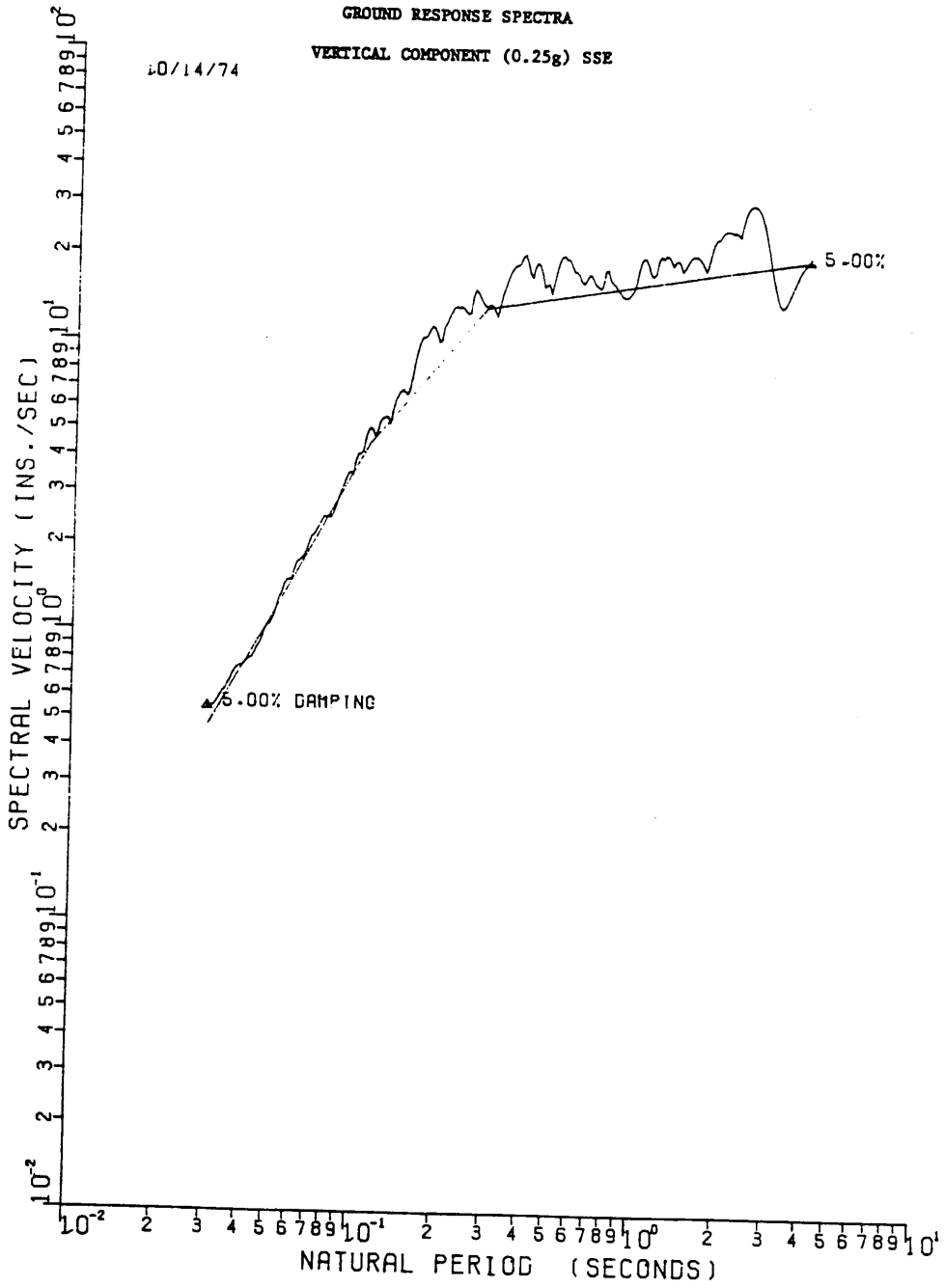

SEABROOK STATION UPDATED FINAL SAFETY ANALYSIS REPORT	5% Critical Damping Ground Response Spectrum, Vertical Component - SSE	
		Figure 3.7(B)-18

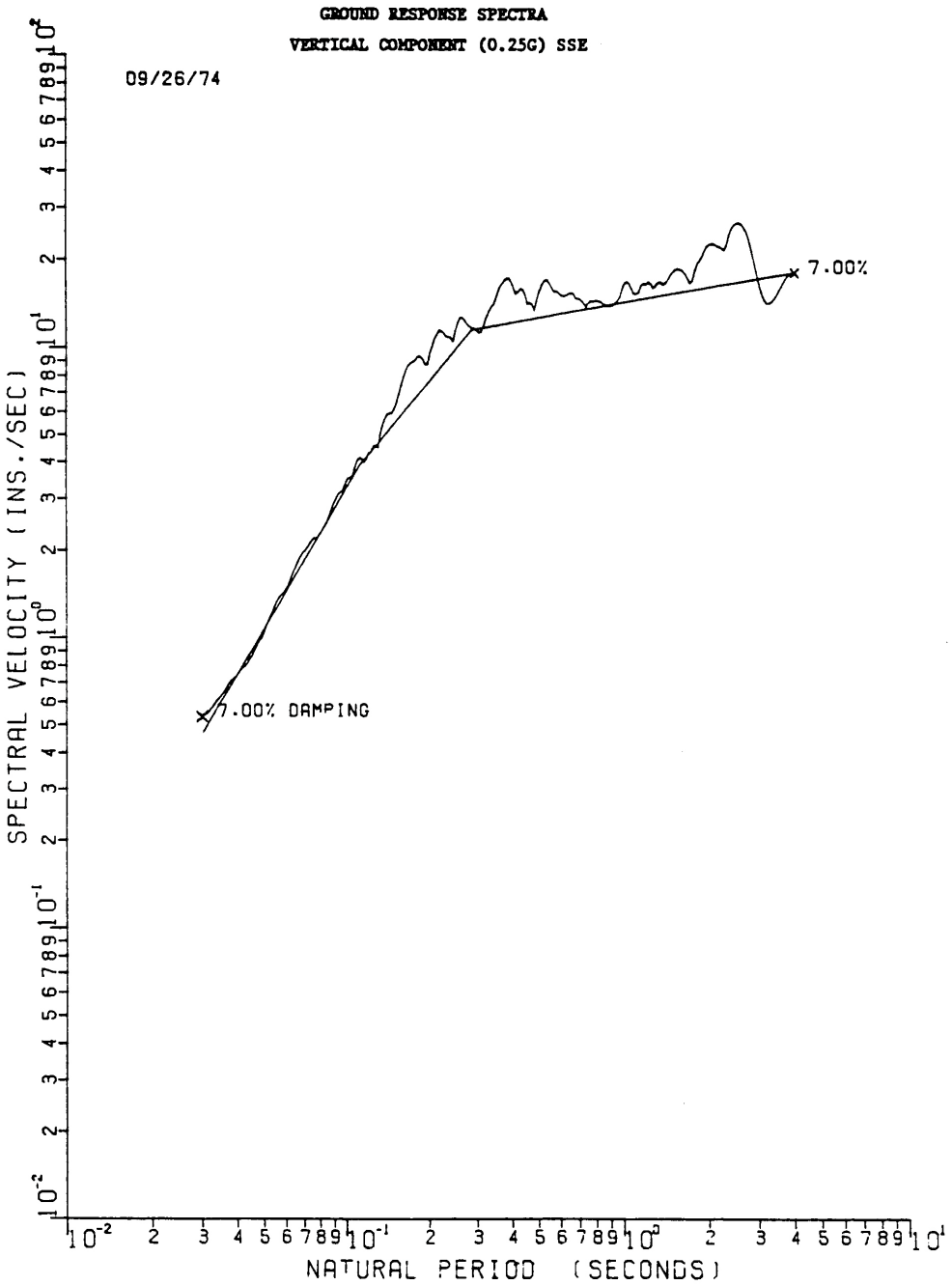

SEABROOK STATION UPDATED FINAL SAFETY ANALYSIS REPORT	7% Critical Damping Ground Response Spectrum, Vertical Component - SSE	
		Figure 3.7(B)-19

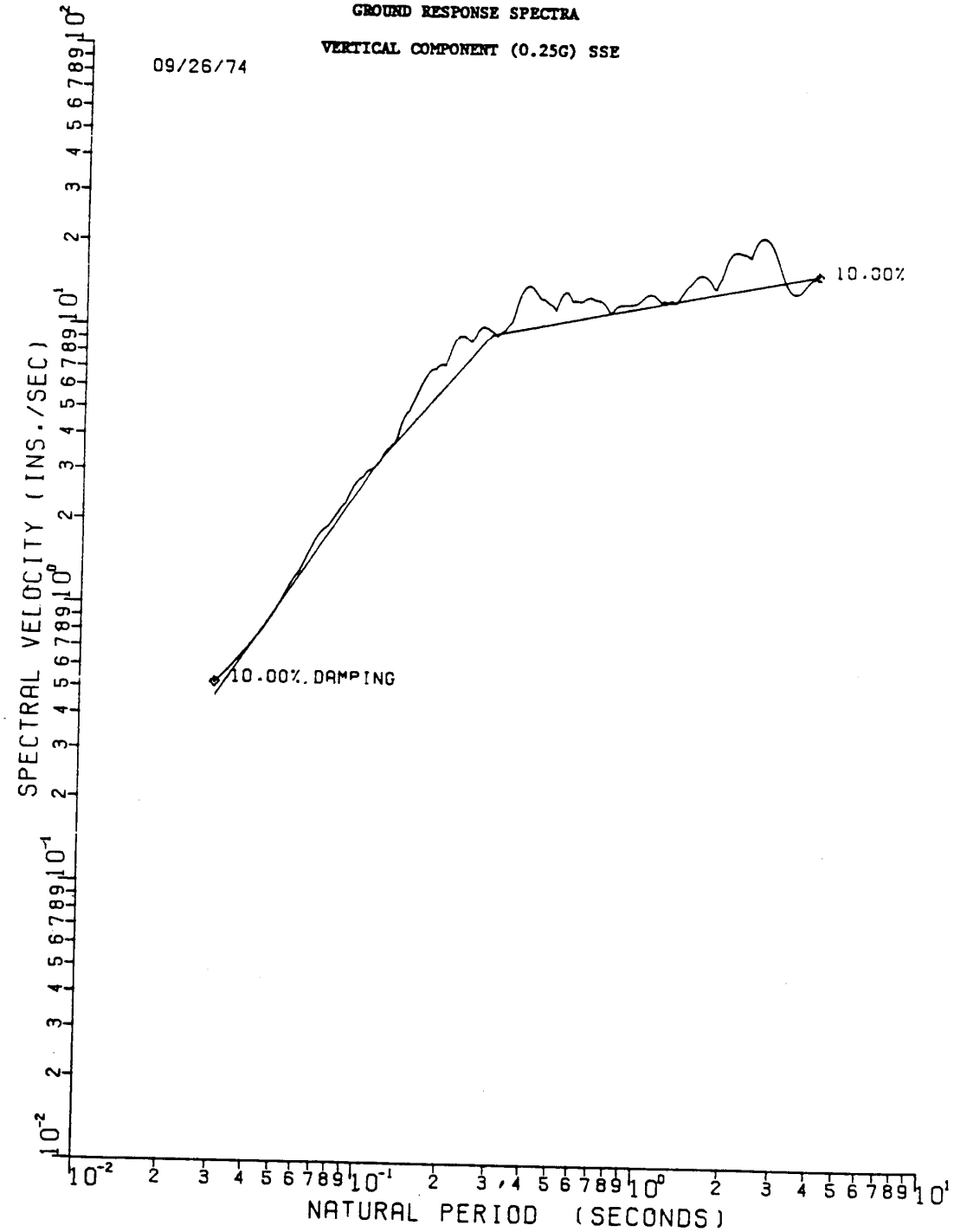

SEABROOK STATION UPDATED FINAL SAFETY ANALYSIS REPORT	10% Critical Damping Ground Response Spectrum, Vertical Component - SSE	
		Figure 3.7(B)-20

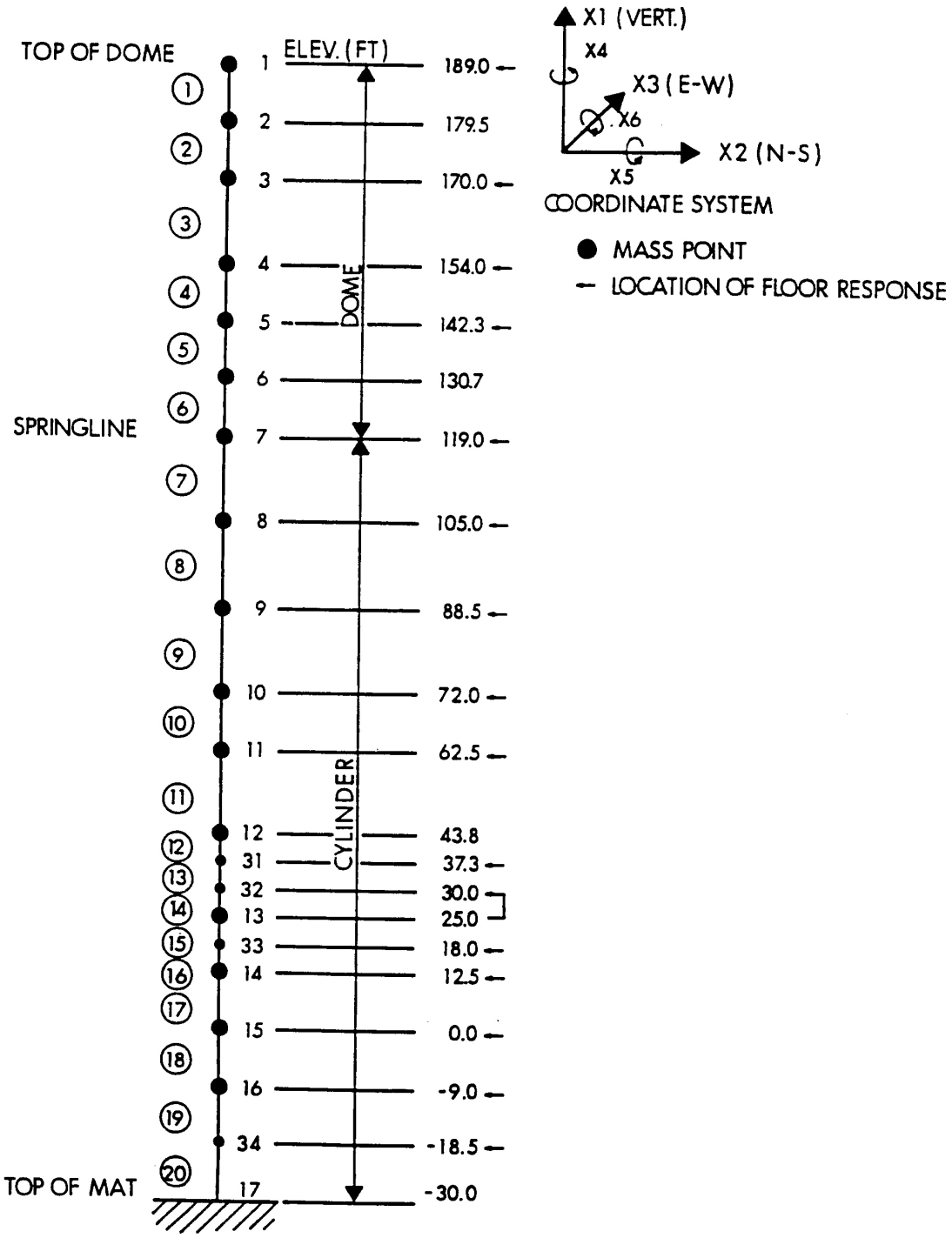

SEABROOK STATION UPDATED FINAL SAFETY ANALYSIS REPORT	Containment Shell - Seismic Model	
		Figure 3.7(B)-21

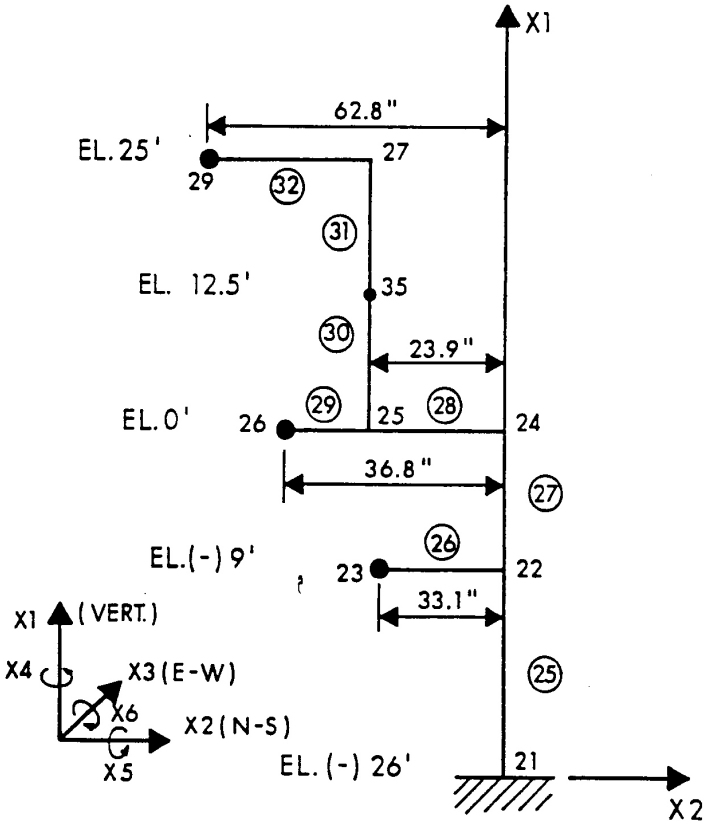

SEABROOK STATION UPDATED FINAL SAFETY ANALYSIS REPORT	Containment Internals - Mathematical Model	
		Figure 3.7(B)-22

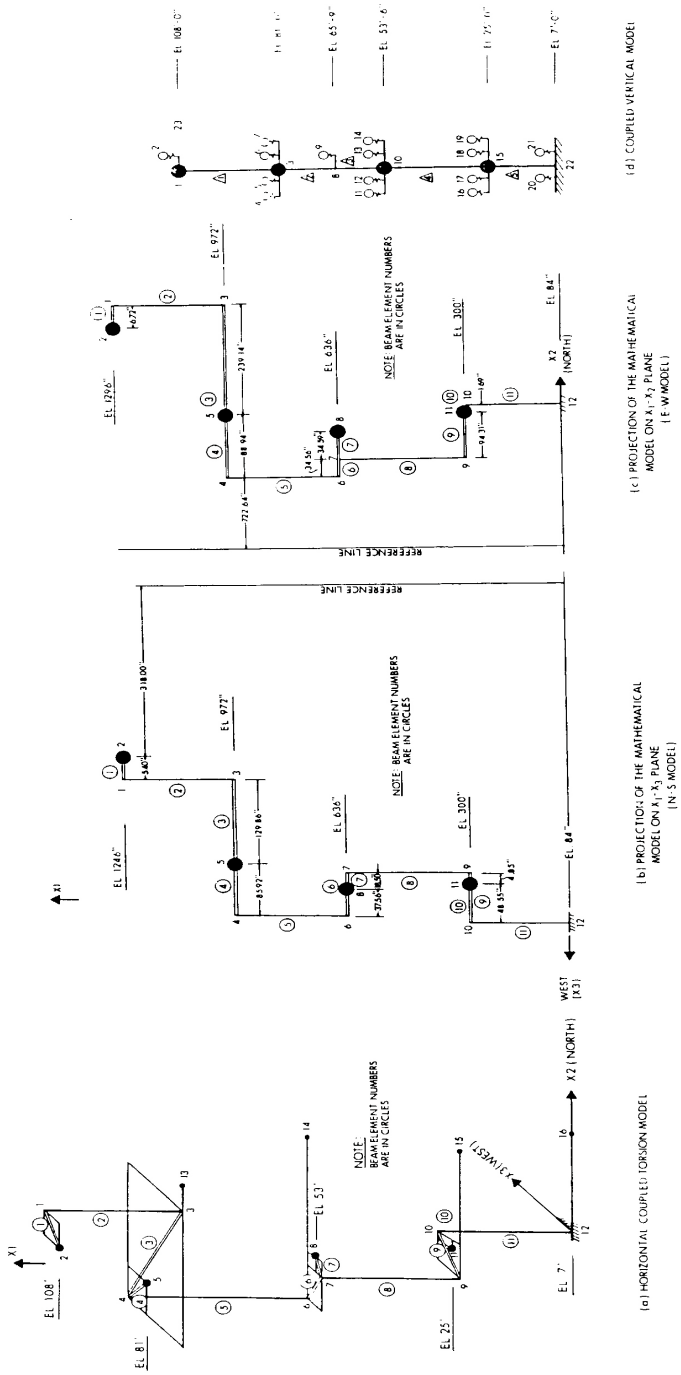

SEABROOK STATION UPDATED FINAL SAFETY ANALYSIS REPORT	Primary Auxiliary Building Seismic Analysis - Mathematical Model	
		Figure 3.7(B)-23

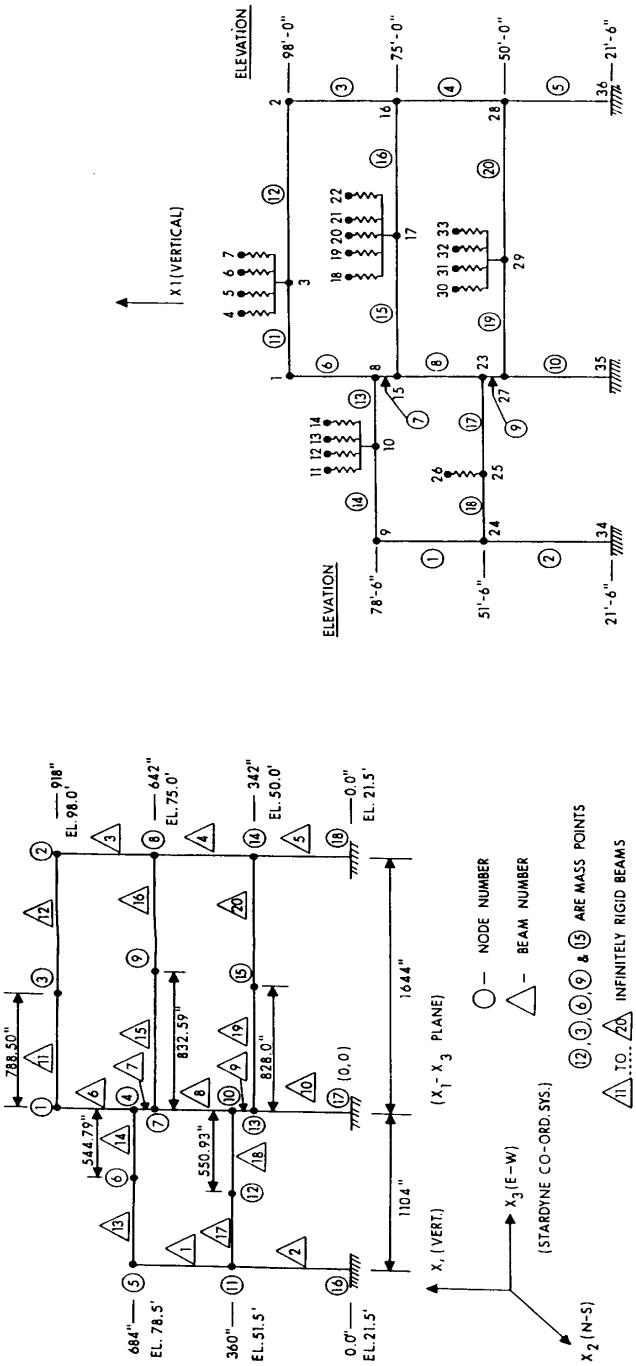

(a) PROJECTION OF THE MATHEMATICAL MODEL ON X_1 - X_3 PLANE.

(b) VERTICAL MODEL.

SEABROOK STATION UPDATED FINAL SAFETY ANALYSIS REPORT	Control/Diesel Generator Building Seismic Analysis - Mathematical Model	
		Figure 3.7(B)-24

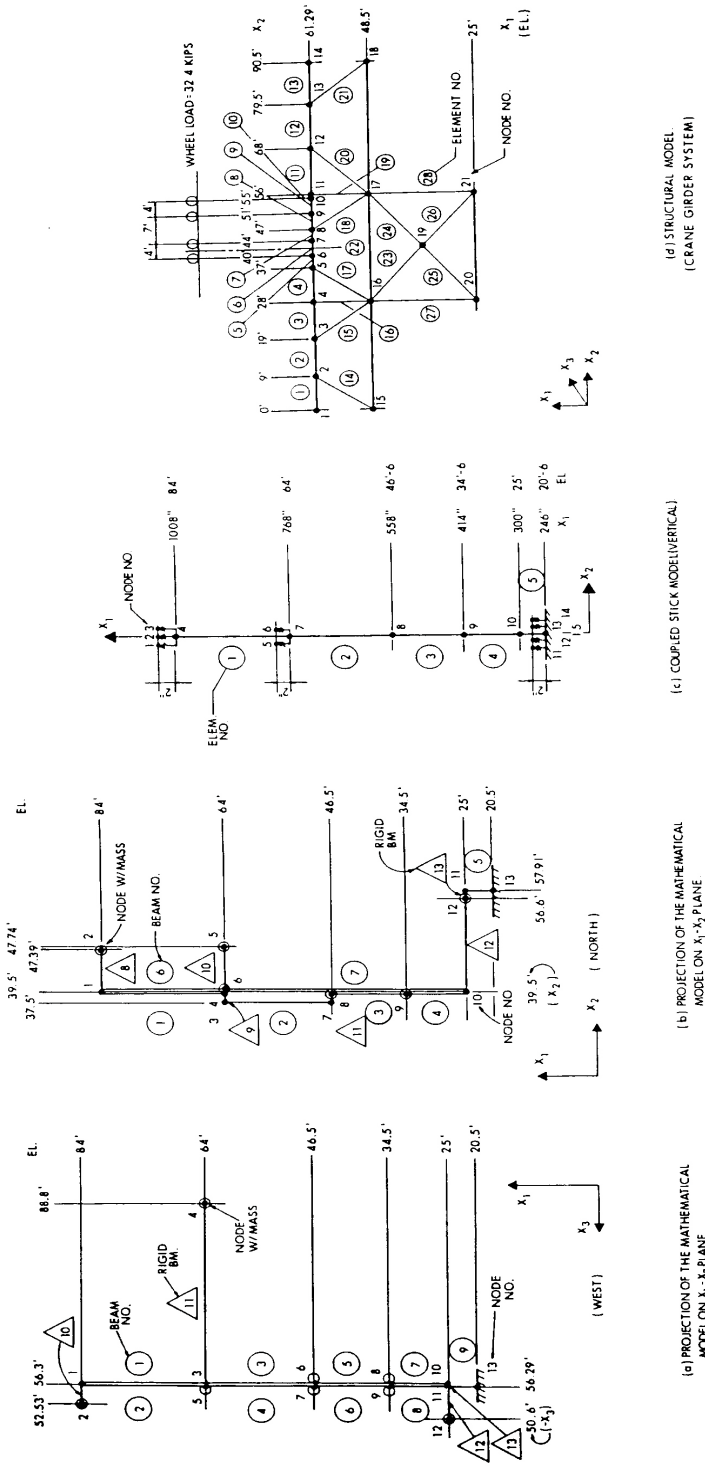

SEABROOK STATION UPDATED FINAL SAFETY ANALYSIS REPORT	Fuel Storage Building Seismic Analysis - Mathematical Model	
		Figure 3.7(B)-25

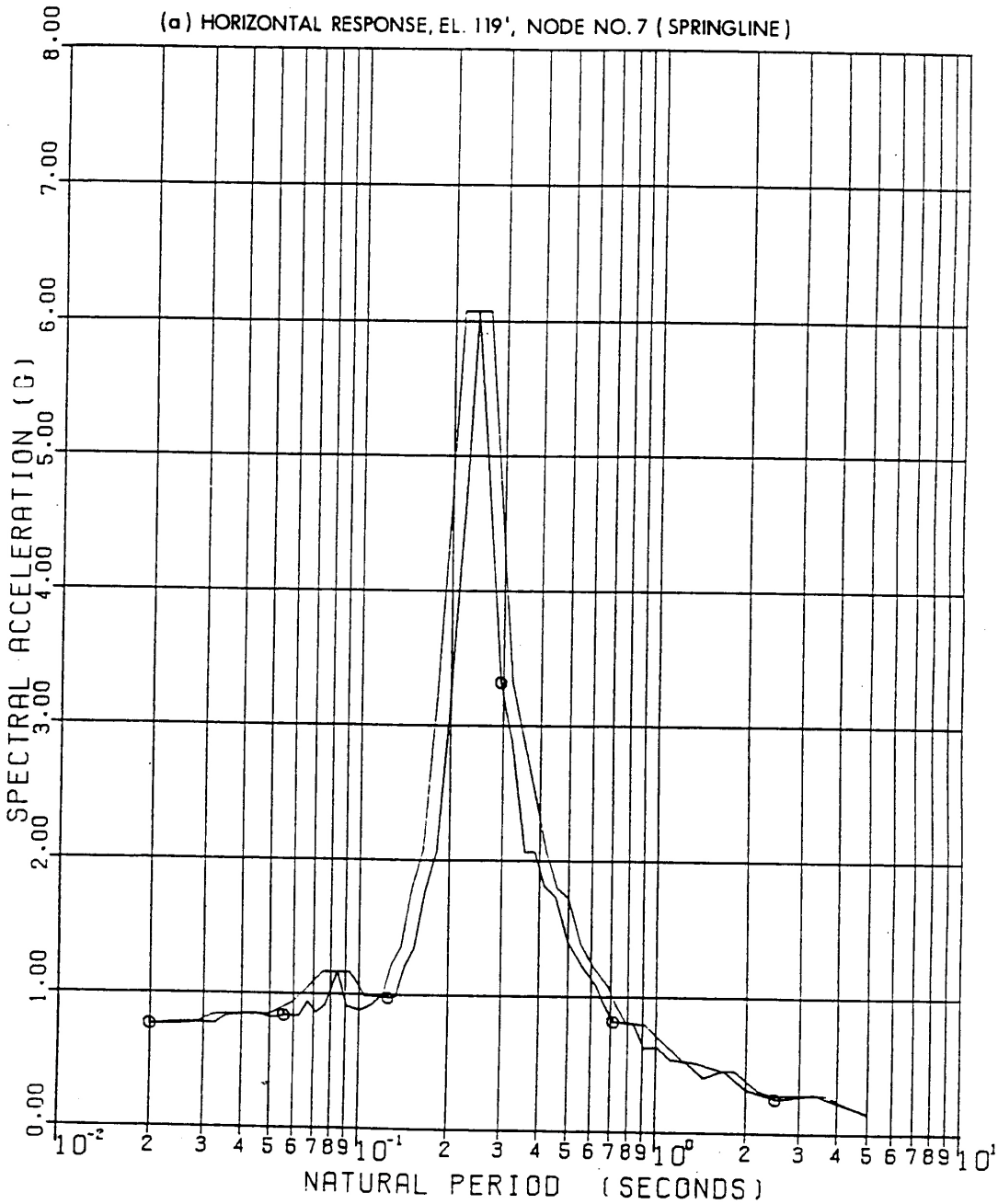

SEABROOK STATION UPDATED FINAL SAFETY ANALYSIS REPORT	Amplified Response Spectra - SSE - Containment Shell - 7% Structural Damping; 2% Equipment Damping [2 Sheets]	
		Figure 3.7(B)-26 Sh 1 of 2

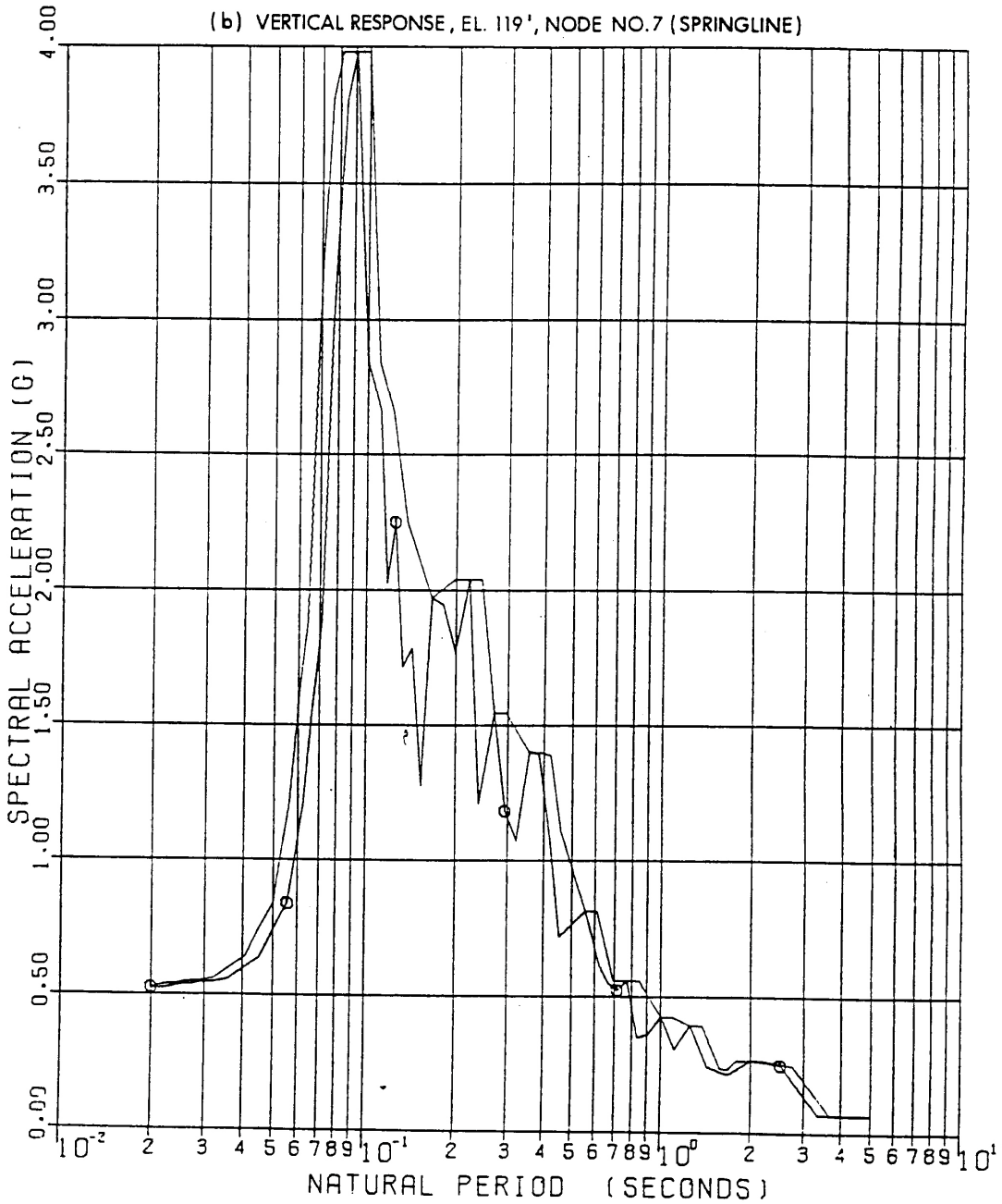

SEABROOK STATION UPDATED FINAL SAFETY ANALYSIS REPORT	Amplified Response Spectra - SSE - Containment Shell - 7% Structural Damping; 2% Equipment Damping [2 Sheets]	
		Figure 3.7(B)-26 Sh 2 of 2

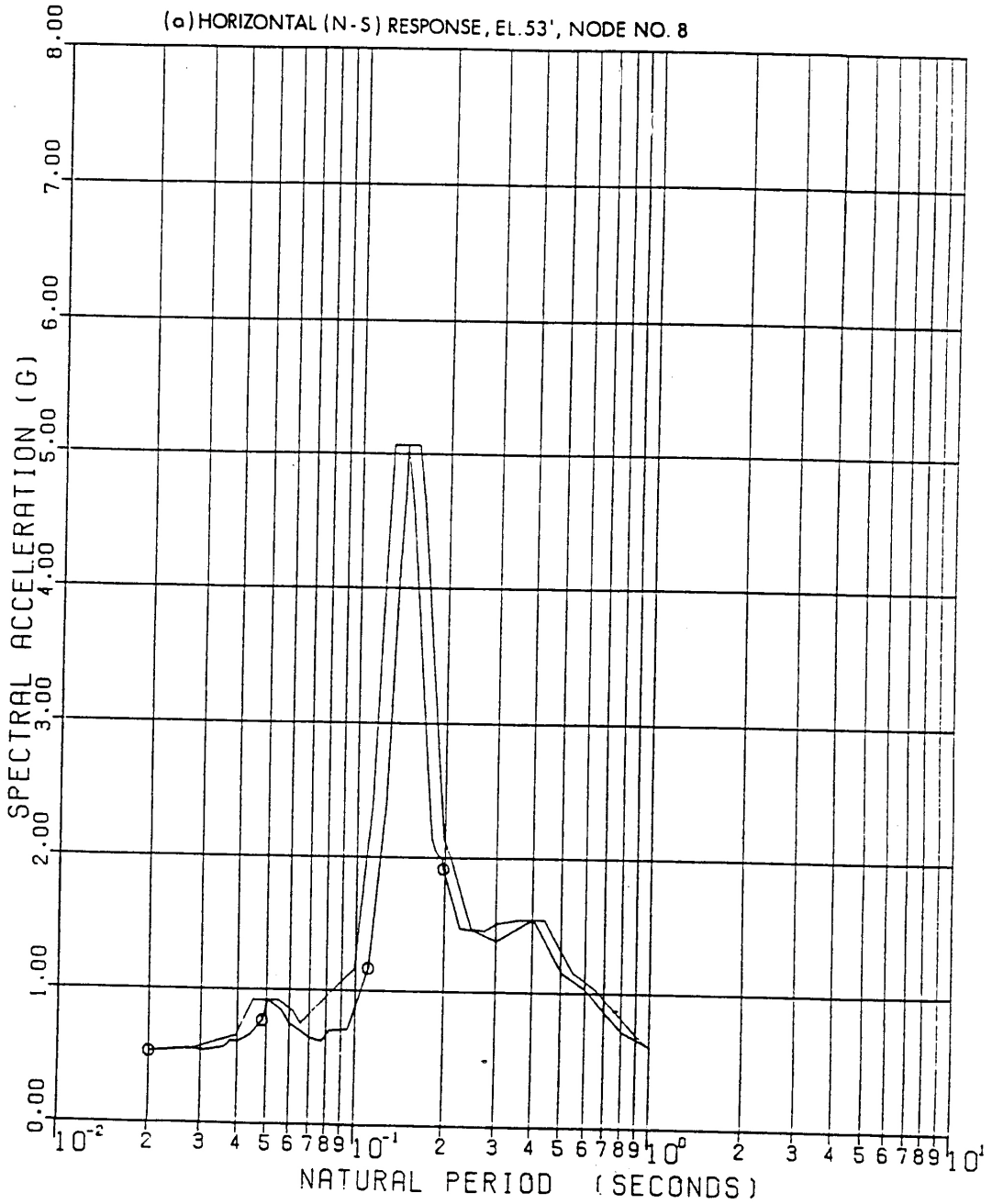

SEABROOK STATION UPDATED FINAL SAFETY ANALYSIS REPORT	Amplified Response Spectra - SSE - Primary Auxiliary Building -7% Structural Damping; 2% Equipment Damping [4 Sheets]	
		Figure 3.7(B)-27 Sh 1 of 4

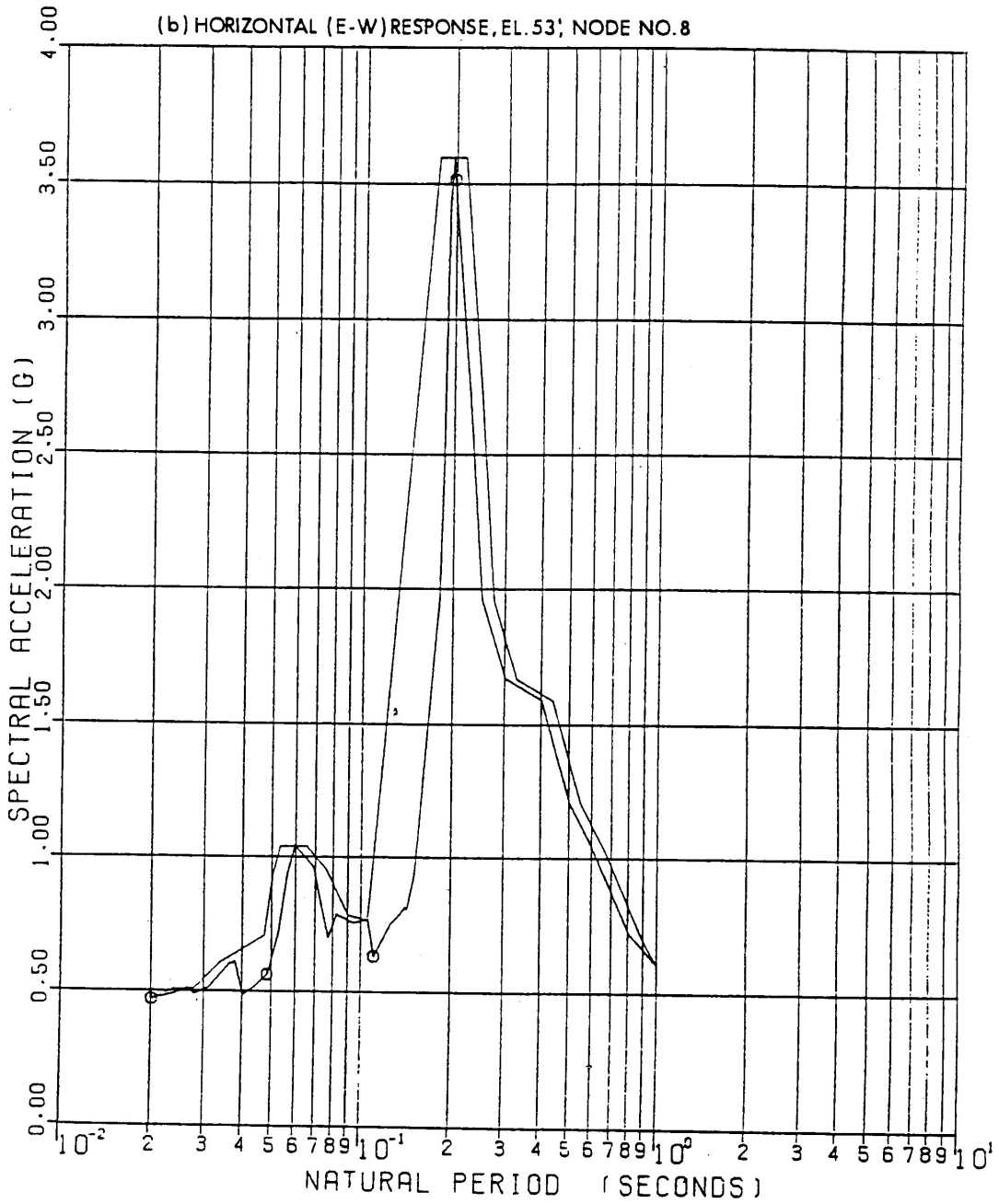

SEABROOK STATION UPDATED FINAL SAFETY ANALYSIS REPORT	Amplified Response Spectra - SSE - Primary Auxiliary Building -7% Structural Damping; 2% Equipment Damping [4 Sheets]	
		Figure 3.7(B)-27 Sh 2 of 4

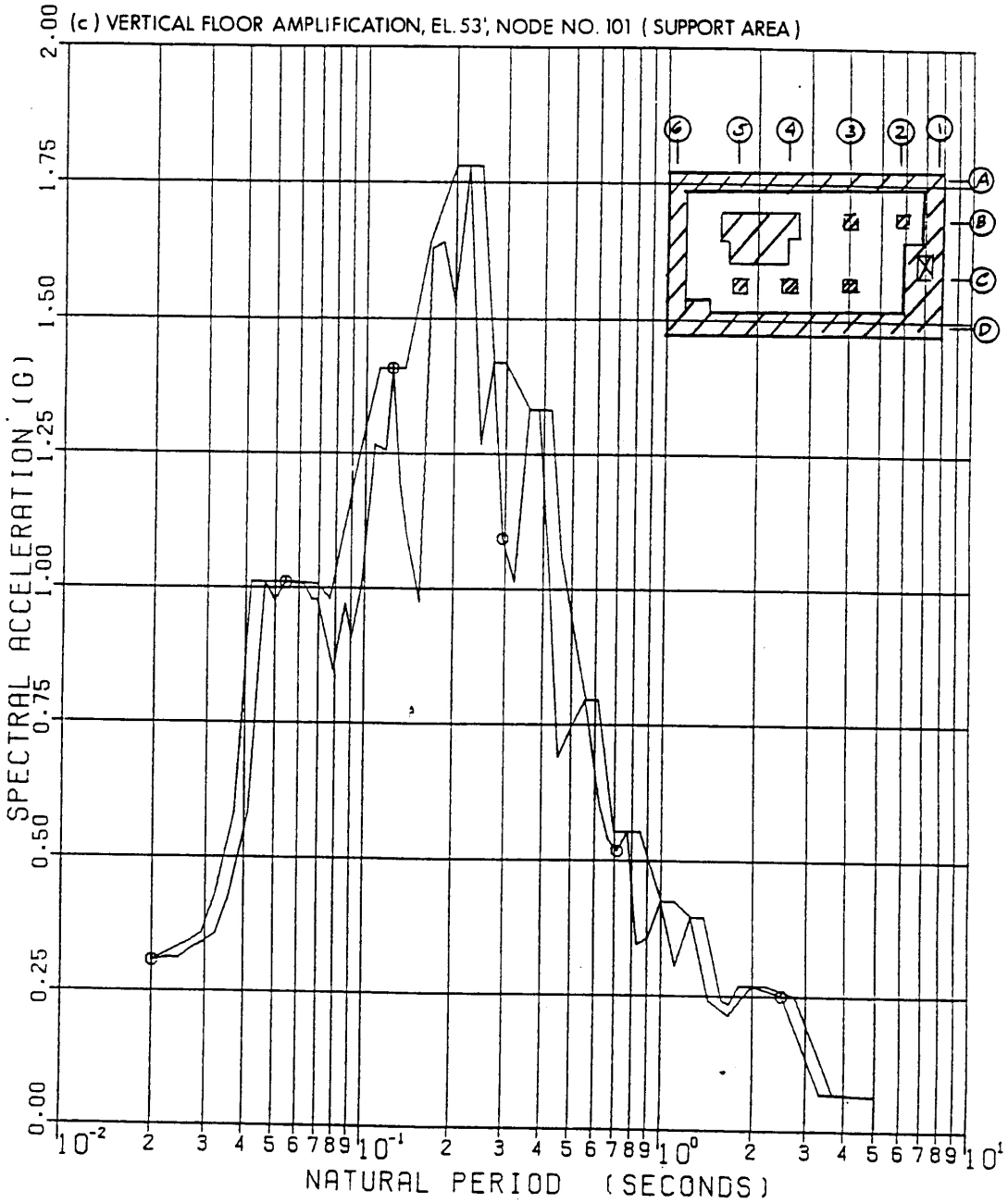

SEABROOK STATION UPDATED FINAL SAFETY ANALYSIS REPORT	Amplified Response Spectra - SSE - Primary Auxiliary Building -7% Structural Damping; 2% Equipment Damping [4 Sheets]	
		Figure 3.7(B)-27 Sh 3 of 4

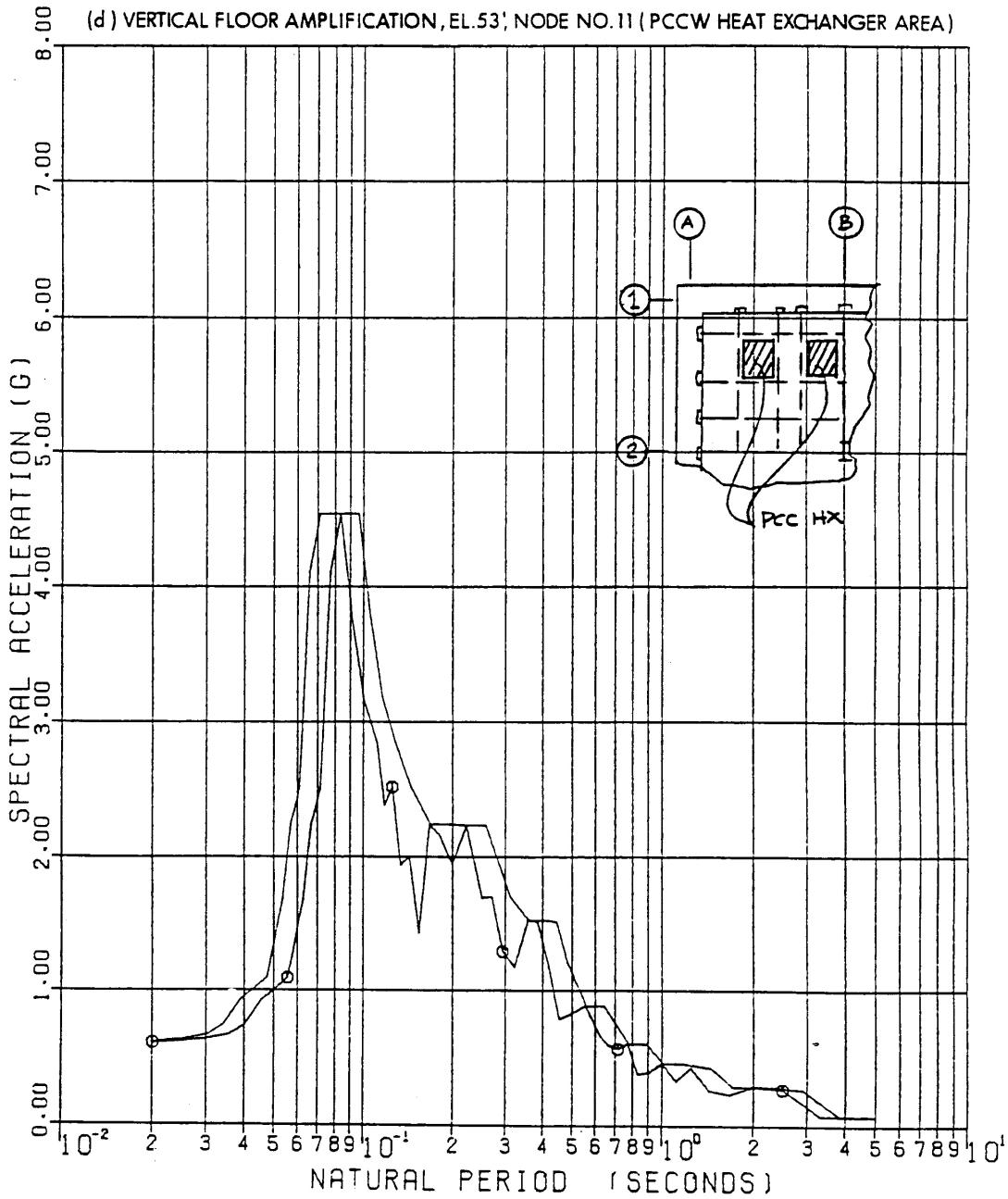

SEABROOK STATION UPDATED FINAL SAFETY ANALYSIS REPORT	Amplified Response Spectra - SSE - Primary Auxiliary Building -7% Structural Damping; 2% Equipment Damping [4 Sheets]	
		Figure 3.7(B)-27 Sh 4 of 4

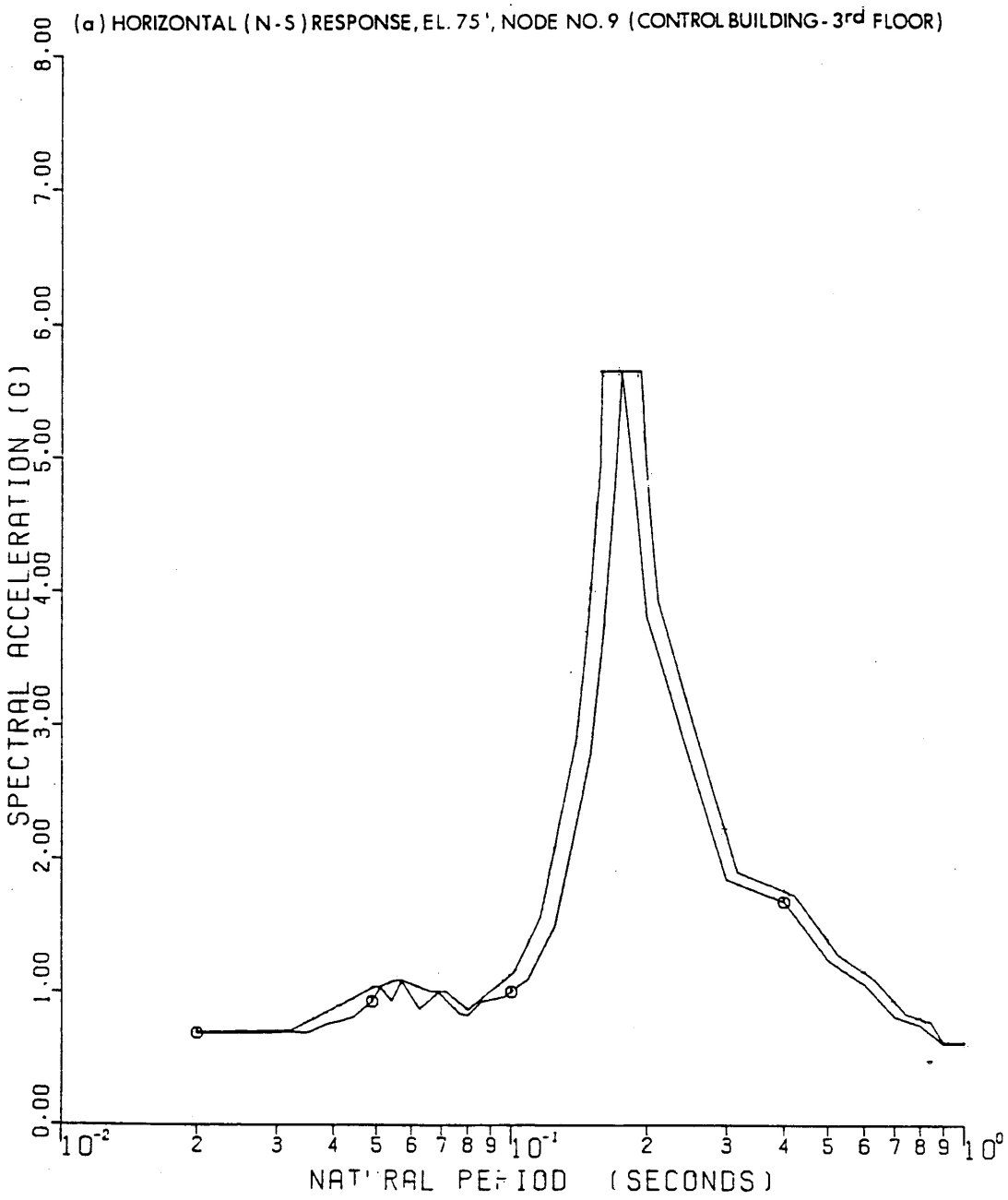

SEABROOK STATION UPDATED FINAL SAFETY ANALYSIS REPORT	Amplified Response Spectra - SSE - Control/Diesel Generator Building - 7% Structural Damping; 2% Equipment Damping [8 Sheets]	
		Figure 3.7(B)-28 Sh 1 of 8

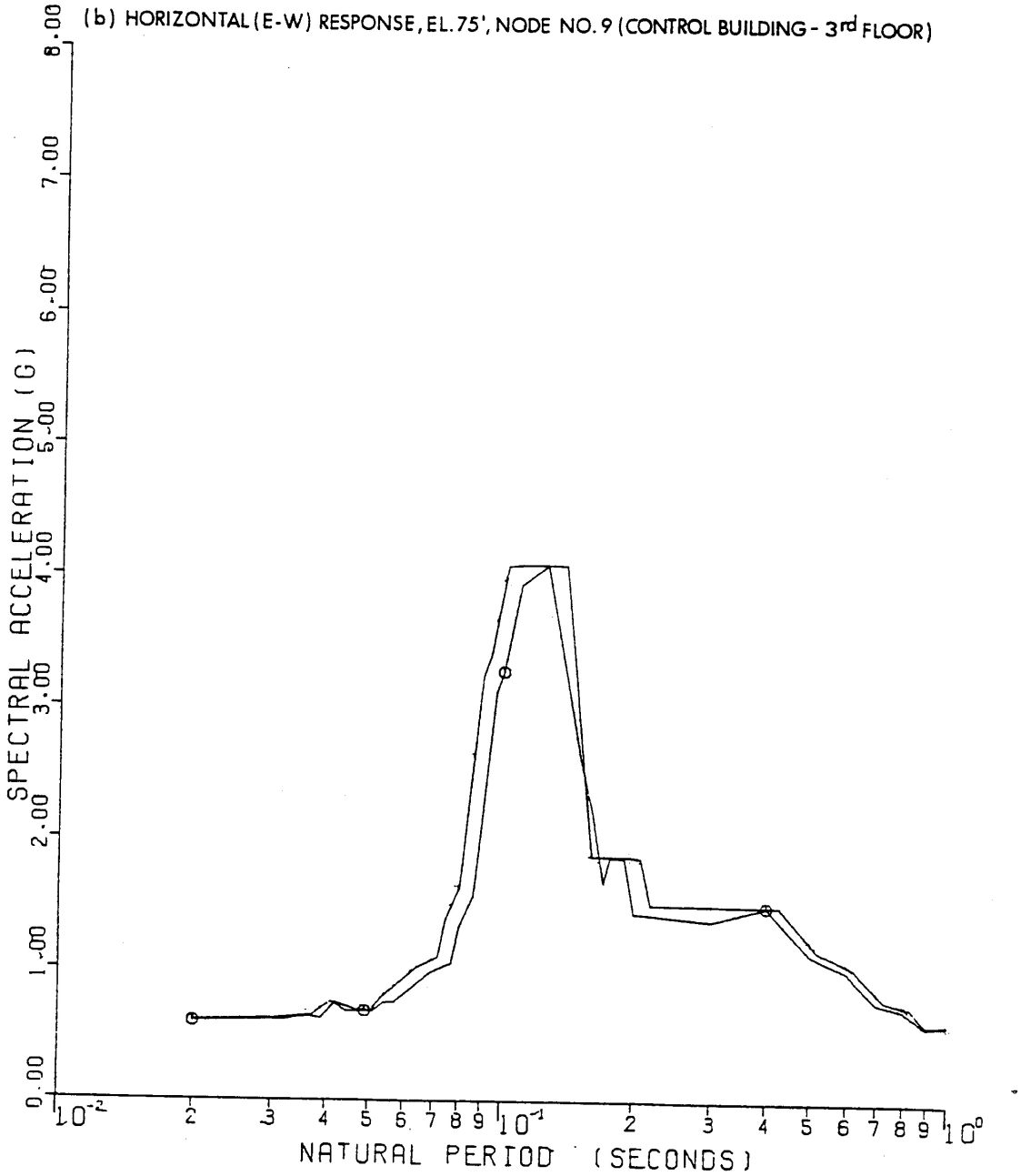

SEABROOK STATION UPDATED FINAL SAFETY ANALYSIS REPORT	Amplified Response Spectra - SSE - Control/Diesel Generator Building - 7% Structural Damping; 2% Equipment Damping [8 Sheets]	
		Figure 3.7(B)-28 Sh 2 of 8

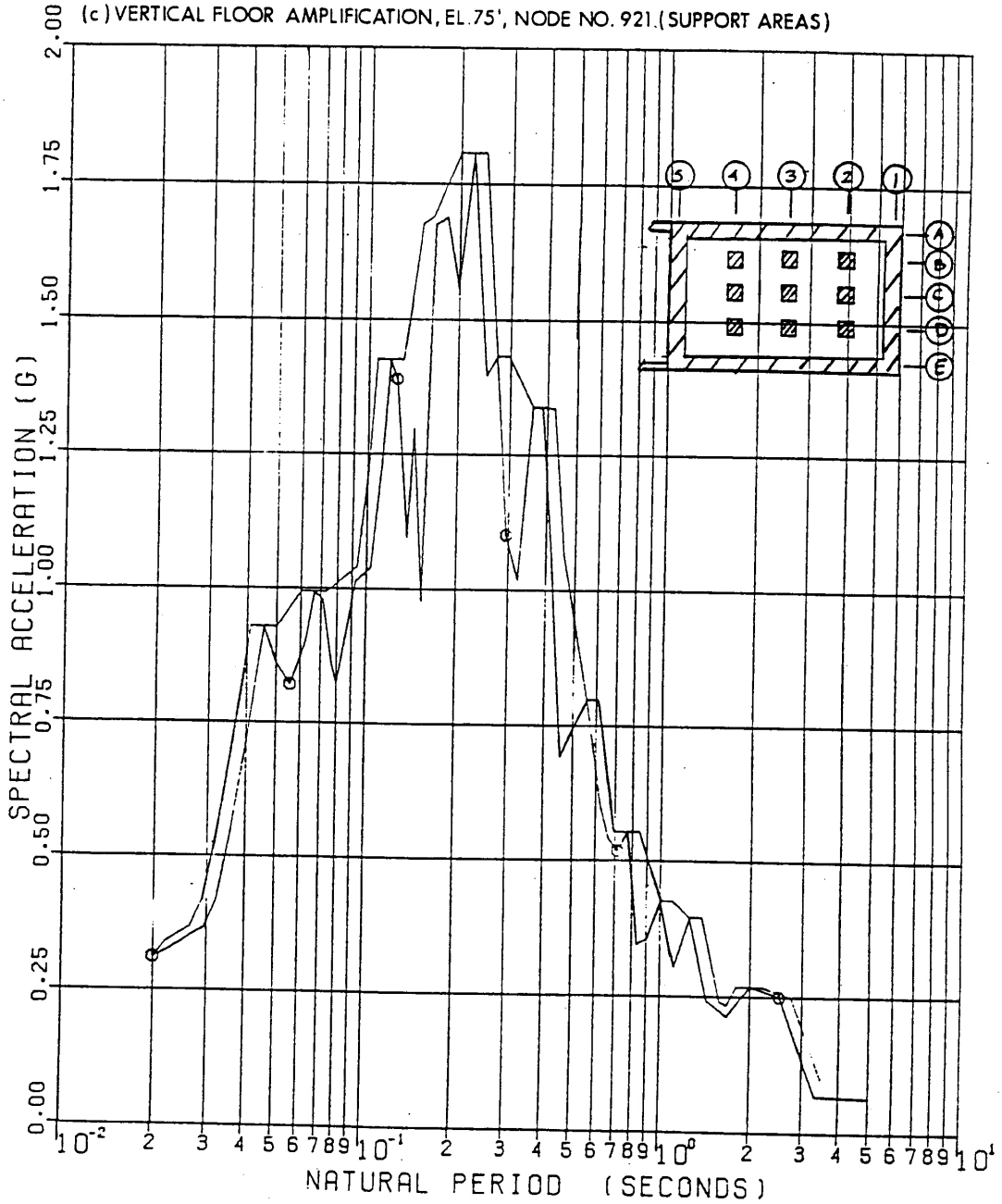

SEABROOK STATION UPDATED FINAL SAFETY ANALYSIS REPORT	Amplified Response Spectra - SSE - Control/Diesel Generator Building - 7% Structural Damping; 2% Equipment Damping [8 Sheets]	
		Figure 3.7(B)-28 Sh 3 of 8

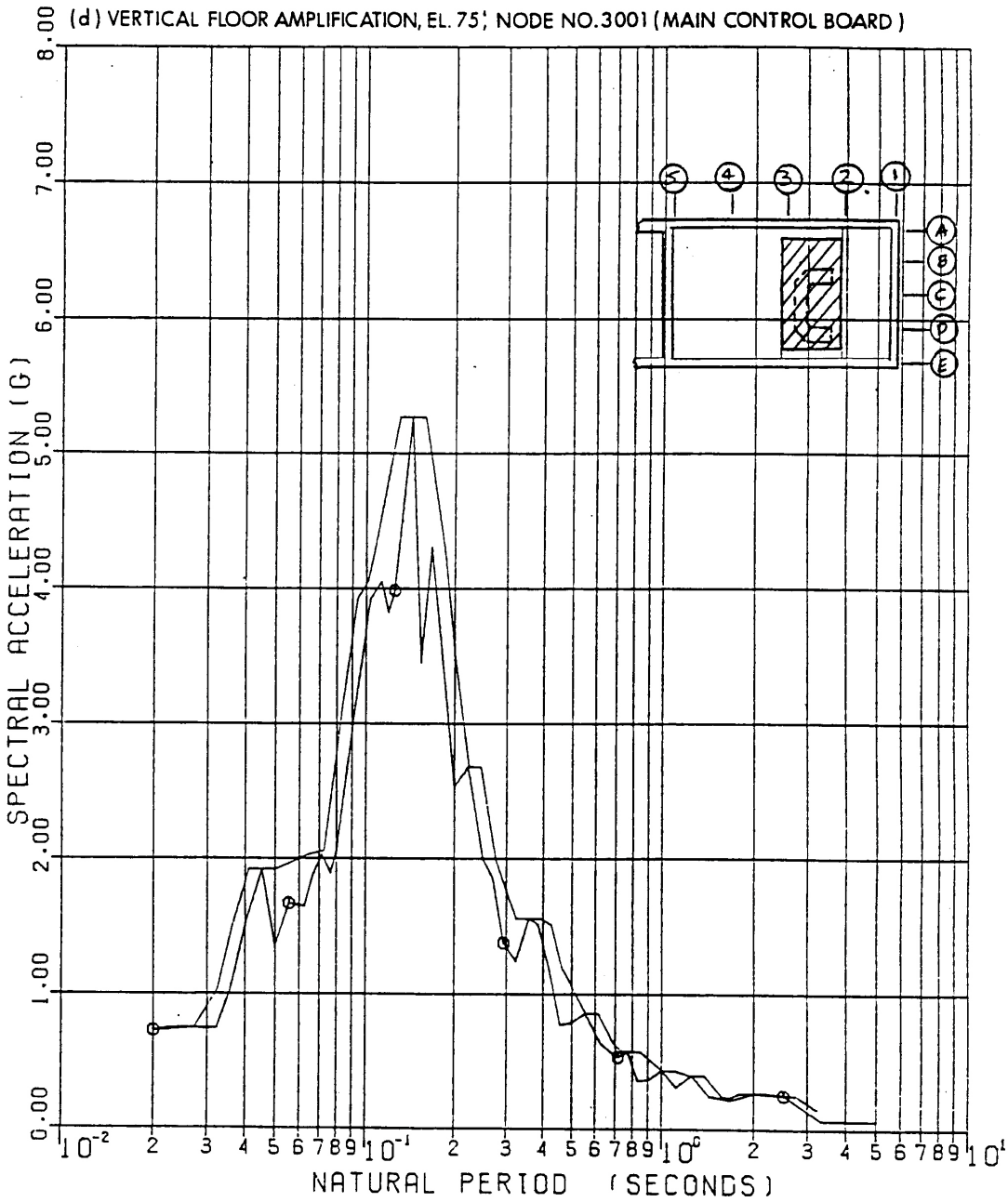

SEABROOK STATION UPDATED FINAL SAFETY ANALYSIS REPORT	Amplified Response Spectra - SSE - Control/Diesel Generator Building - 7% Structural Damping; 2% Equipment Damping [8 Sheets]	
		Figure 3.7(B)-28 Sh 4 of 8

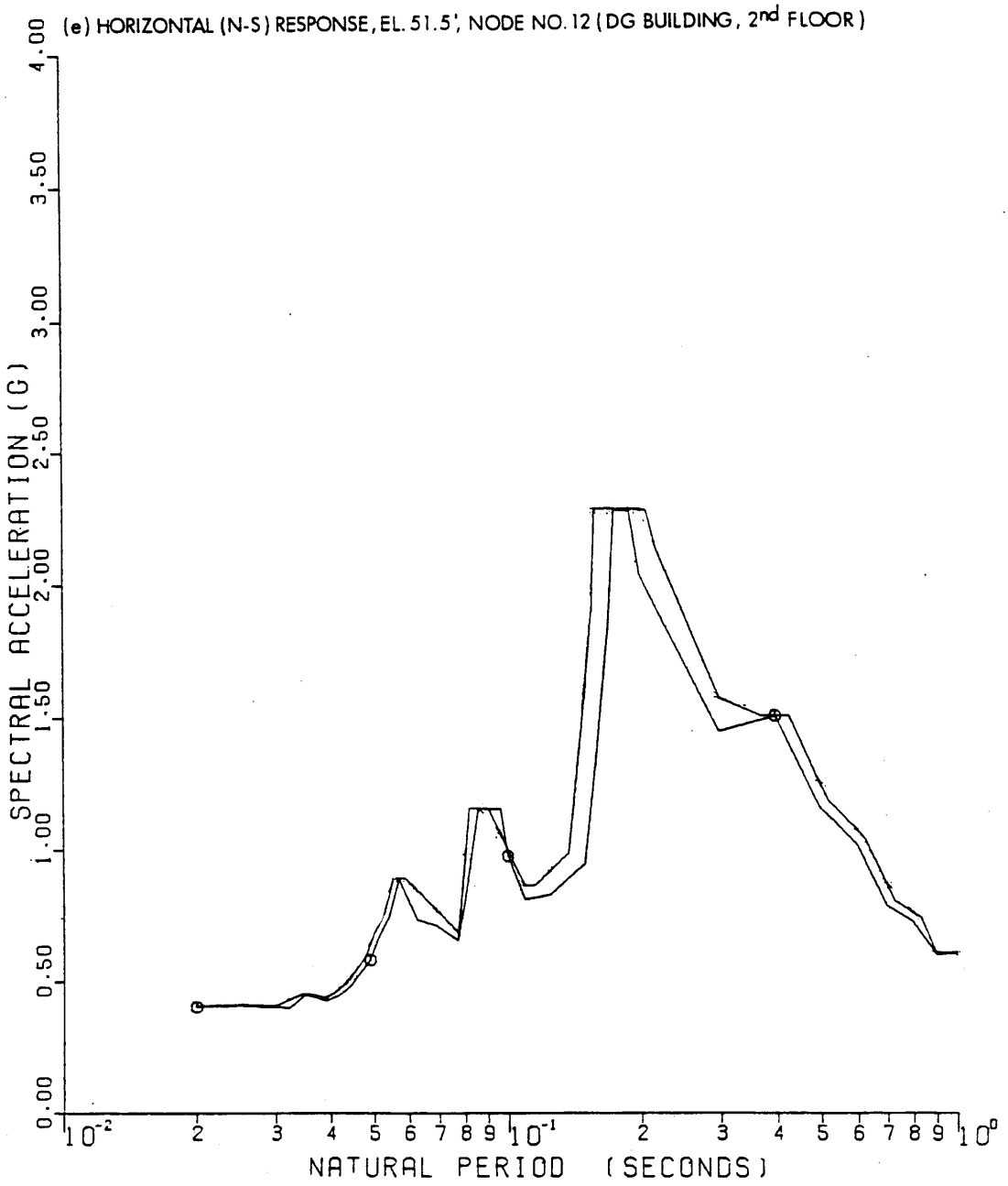

SEABROOK STATION UPDATED FINAL SAFETY ANALYSIS REPORT	Amplified Response Spectra - SSE - Control/Diesel Generator Building - 7% Structural Damping; 2% Equipment Damping [8 Sheets]	
		Figure 3.7(B)-28 Sh 5 of 8

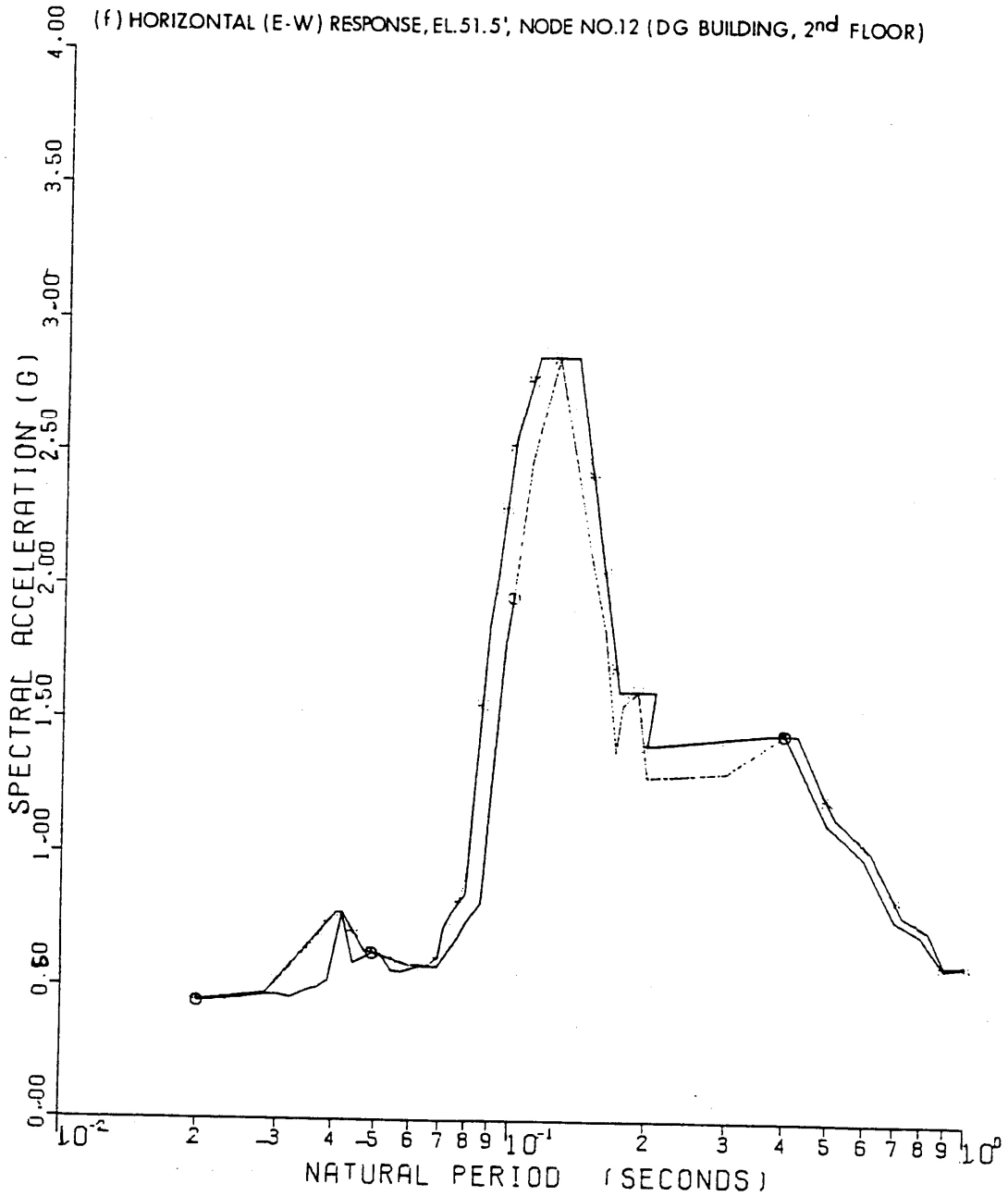

SEABROOK STATION UPDATED FINAL SAFETY ANALYSIS REPORT	Amplified Response Spectra - SSE - Control/Diesel Generator Building - 7% Structural Damping; 2% Equipment Damping [8 Sheets]	
		Figure 3.7(B)-28 Sh 6 of 8

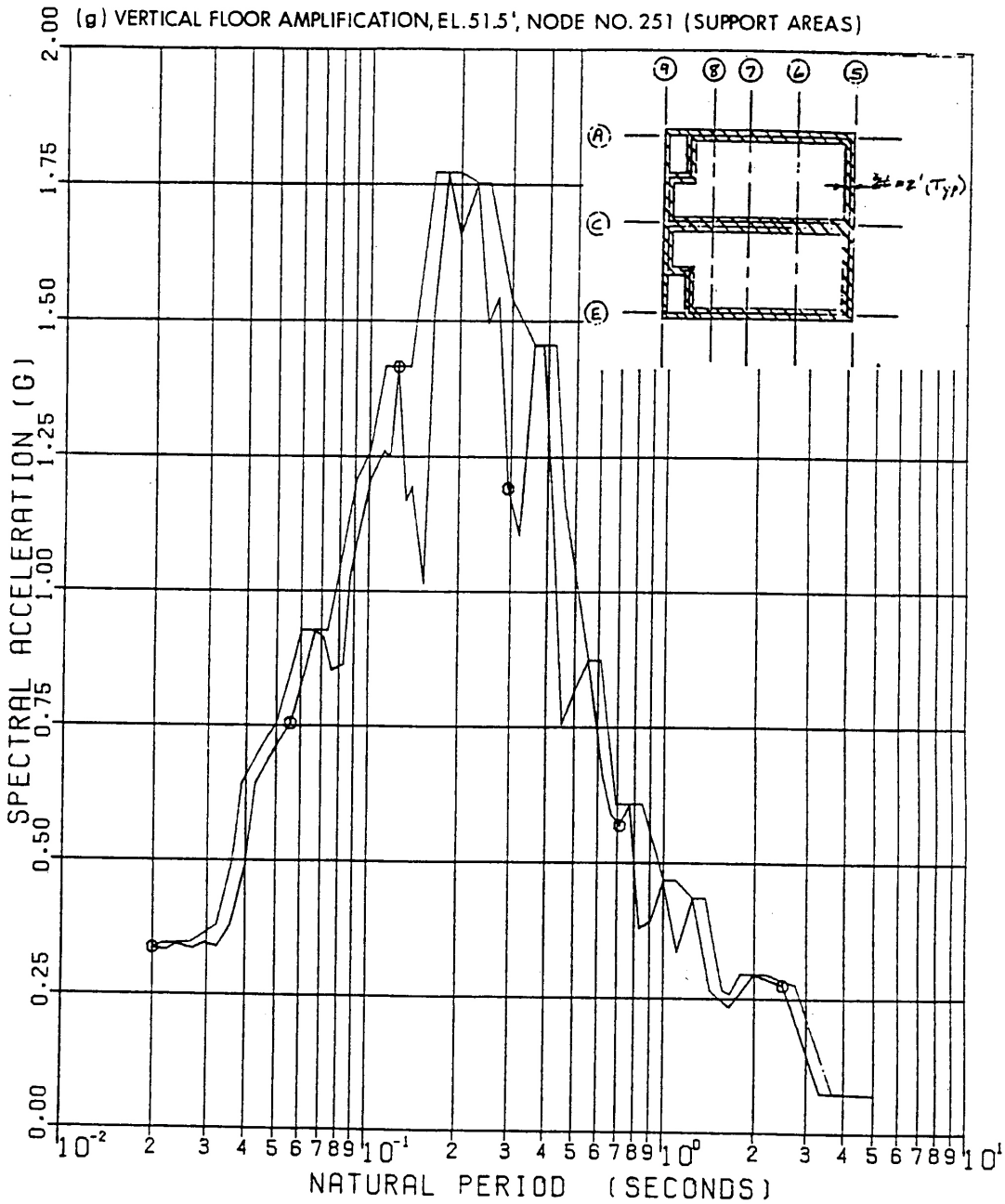

SEABROOK STATION UPDATED FINAL SAFETY ANALYSIS REPORT	Amplified Response Spectra - SSE - Control/Diesel Generator Building - 7% Structural Damping; 2% Equipment Damping [8 Sheets]	
		Figure 3.7(B)-28 Sh 7 of 8

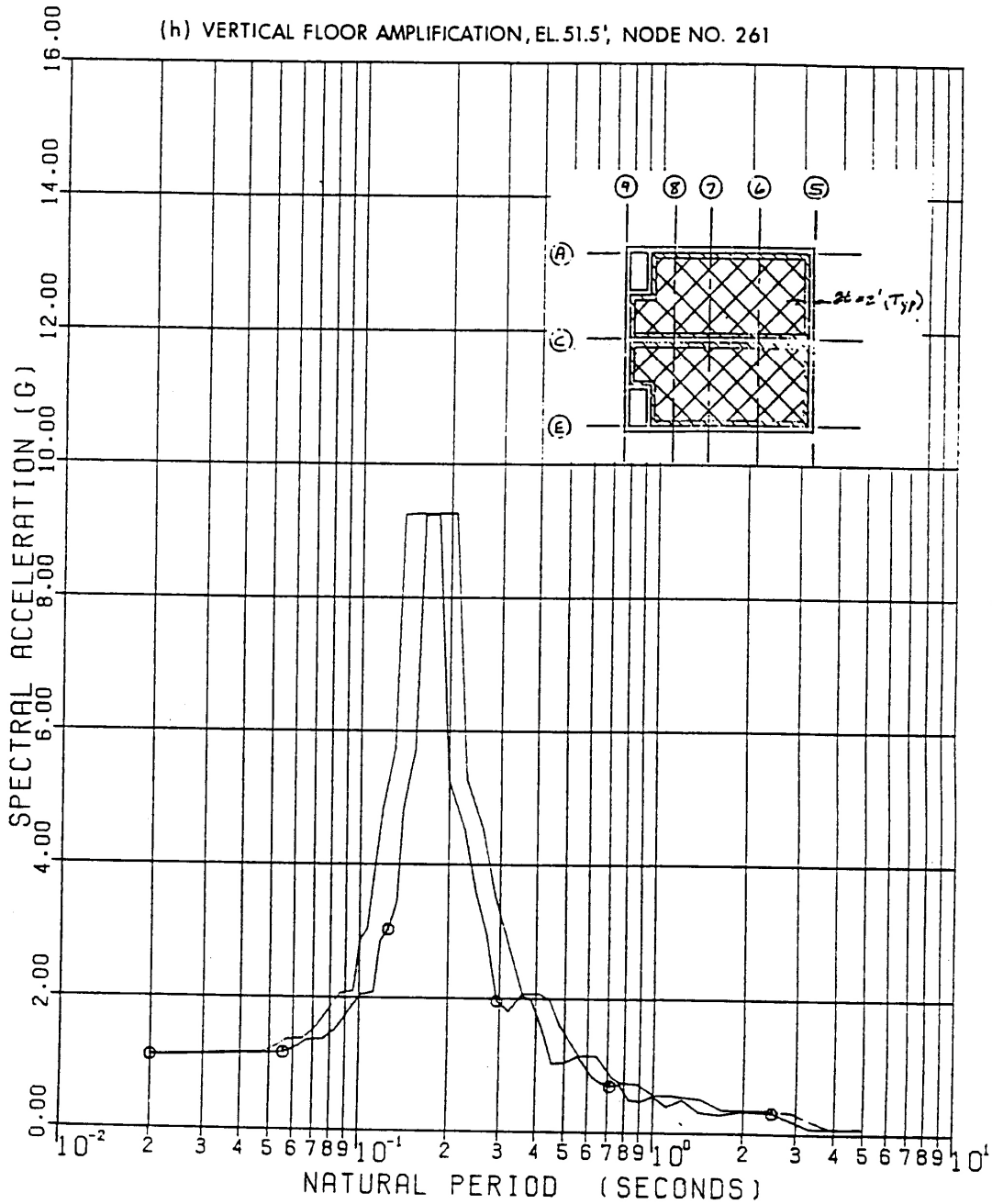

SEABROOK STATION UPDATED FINAL SAFETY ANALYSIS REPORT	Amplified Response Spectra - SSE - Control/Diesel Generator Building - 7% Structural Damping; 2% Equipment Damping [8 Sheets]	
		Figure 3.7(B)-28 Sh 8 of 8

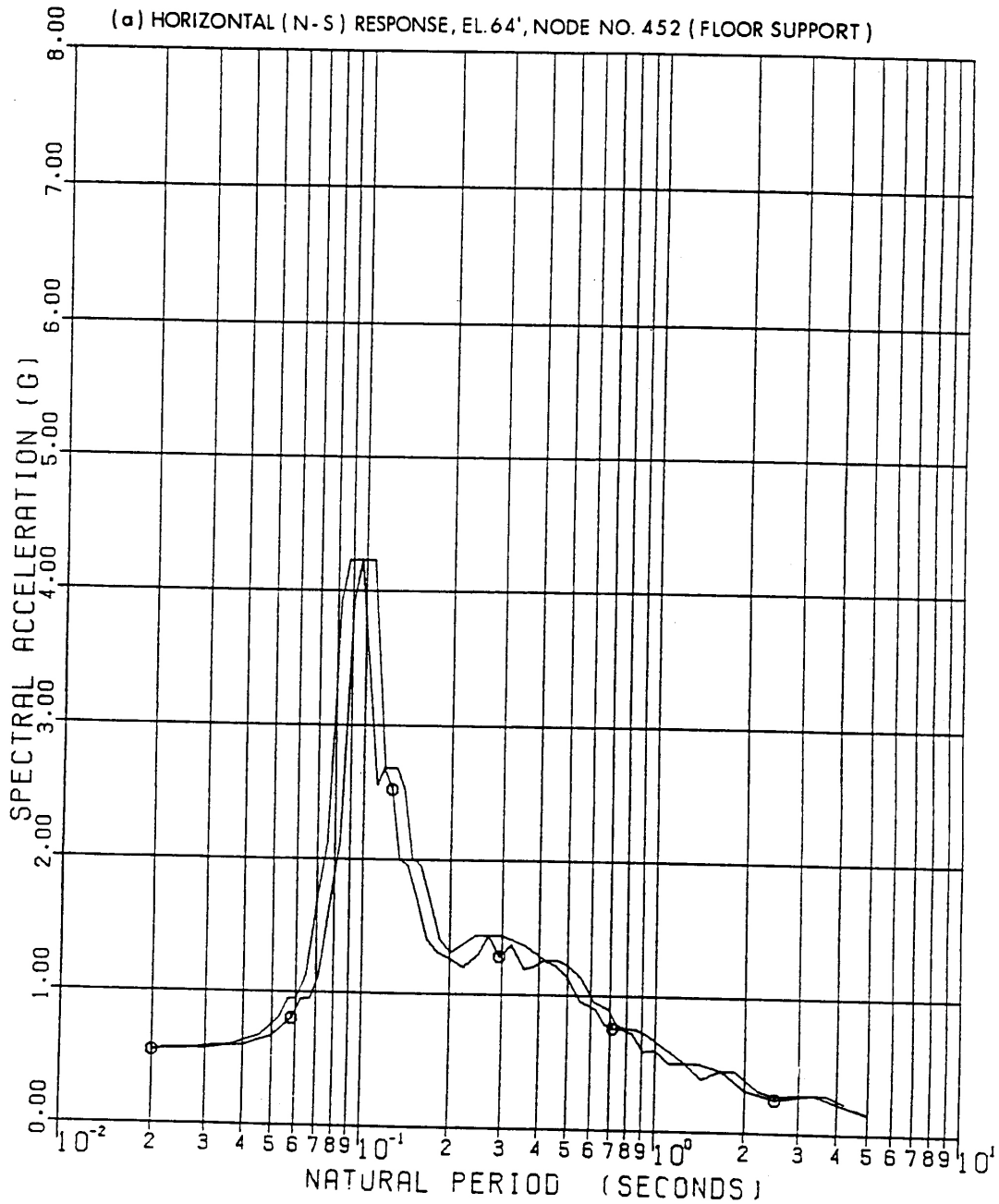

SEABROOK STATION UPDATED FINAL SAFETY ANALYSIS REPORT	Amplified Response Spectra - SSE - Fuel Storage Building - 7% Structural Damping; 2% Equipment Damping [4 Sheets]	
		Figure 3.7(B)-29 Sh 1 of 4

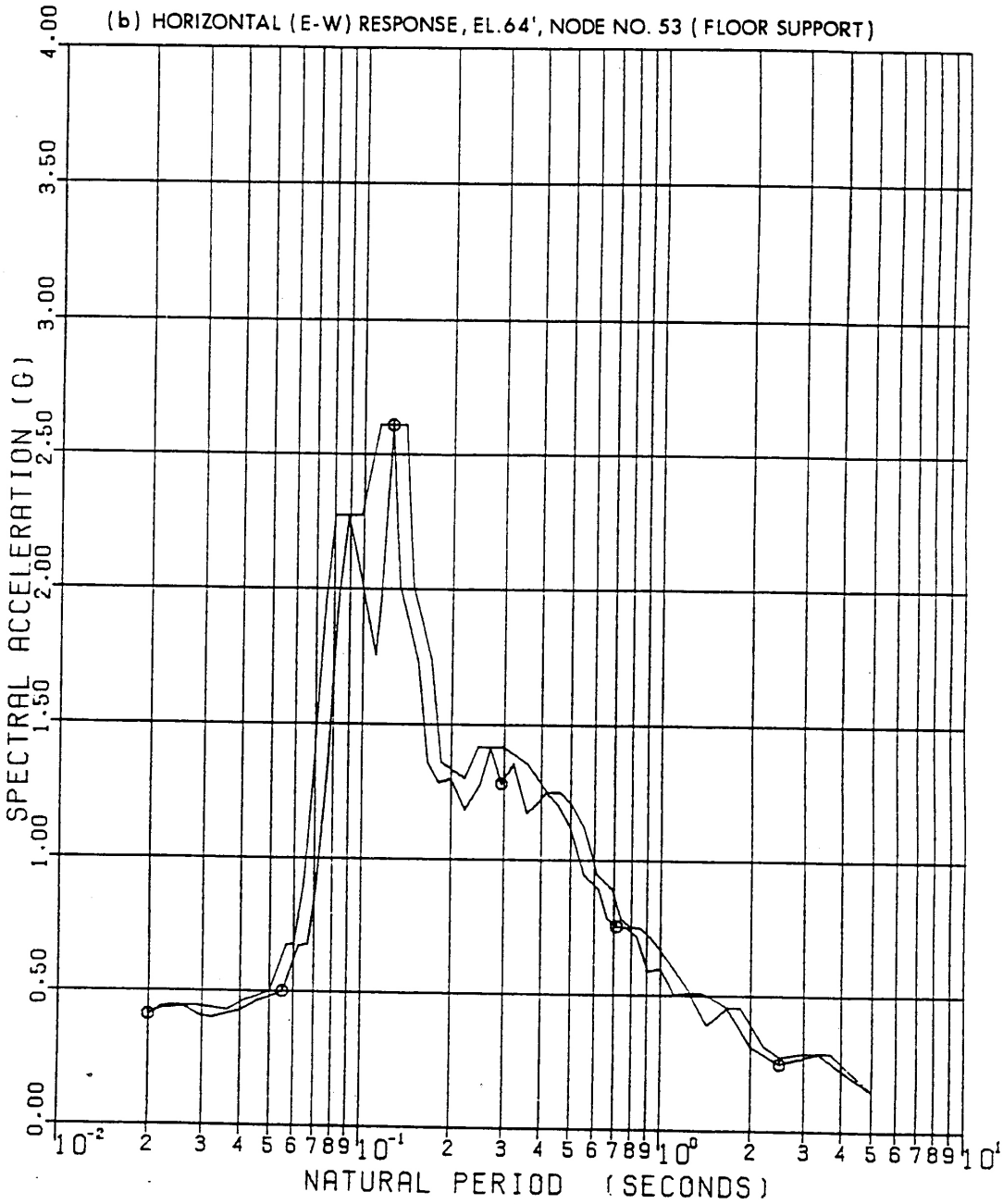

SEABROOK STATION UPDATED FINAL SAFETY ANALYSIS REPORT	Amplified Response Spectra - SSE - Fuel Storage Building - 7% Structural Damping; 2% Equipment Damping [4 Sheets]	
		Figure 3.7(B)-29 Sh 2 of 4

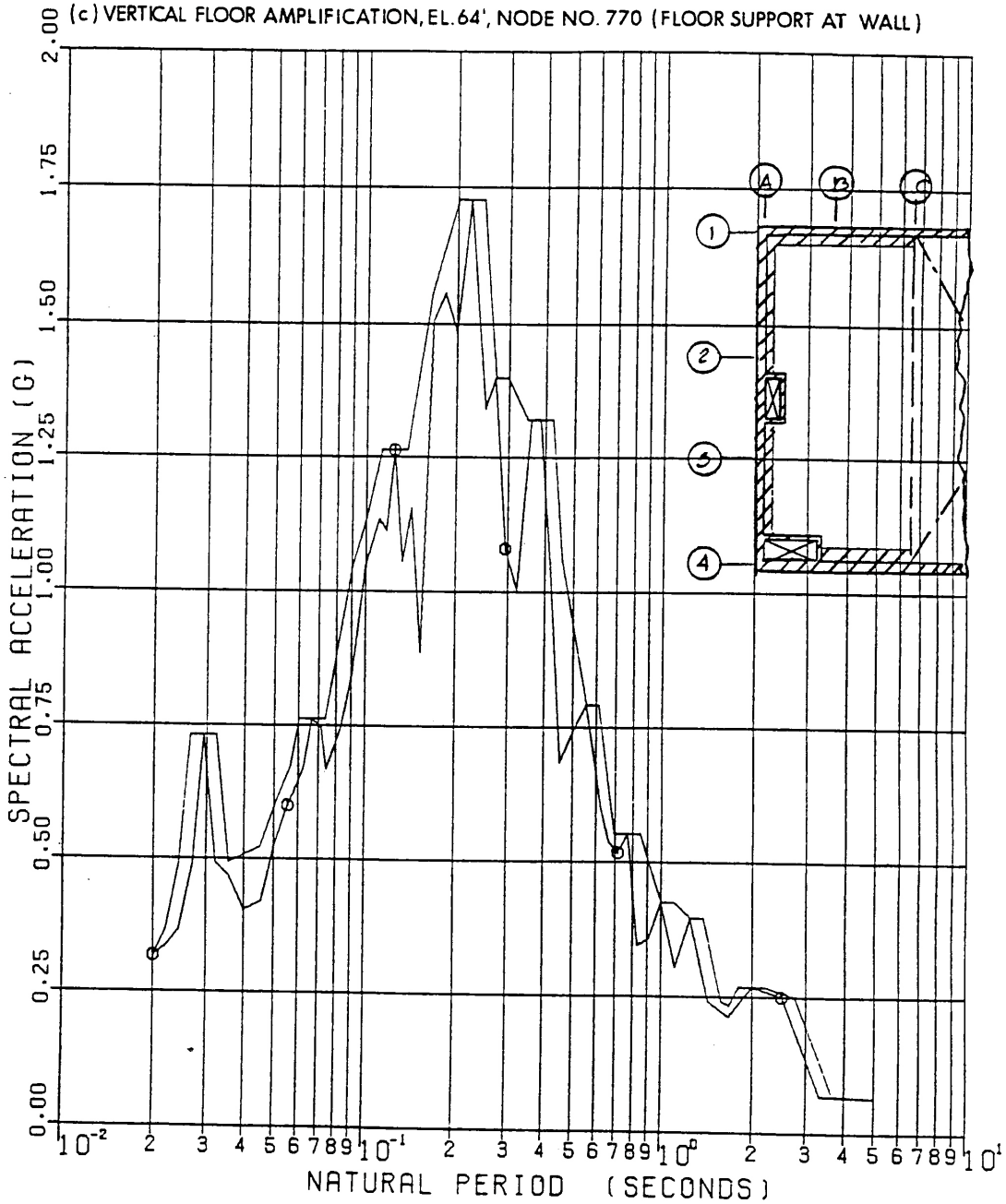

SEABROOK STATION UPDATED FINAL SAFETY ANALYSIS REPORT	Amplified Response Spectra - SSE - Fuel Storage Building - 7% Structural Damping; 2% Equipment Damping [4 Sheets]	
		Figure 3.7(B)-29 Sh 3 of 4

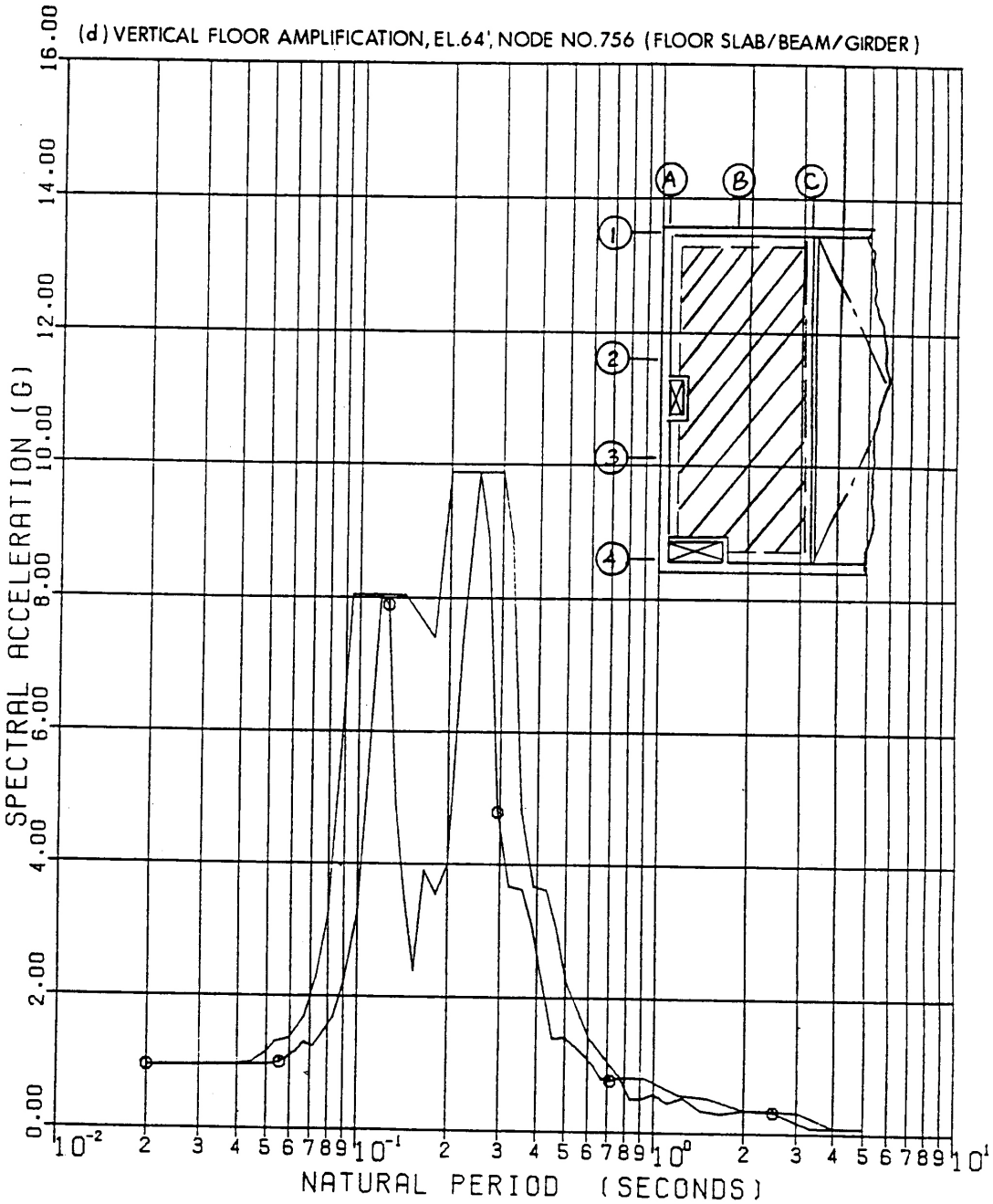

SEABROOK STATION UPDATED FINAL SAFETY ANALYSIS REPORT	Amplified Response Spectra - SSE - Fuel Storage Building - 7% Structural Damping; 2% Equipment Damping [4 Sheets]	
		Figure 3.7(B)-29 Sh 4 of 4

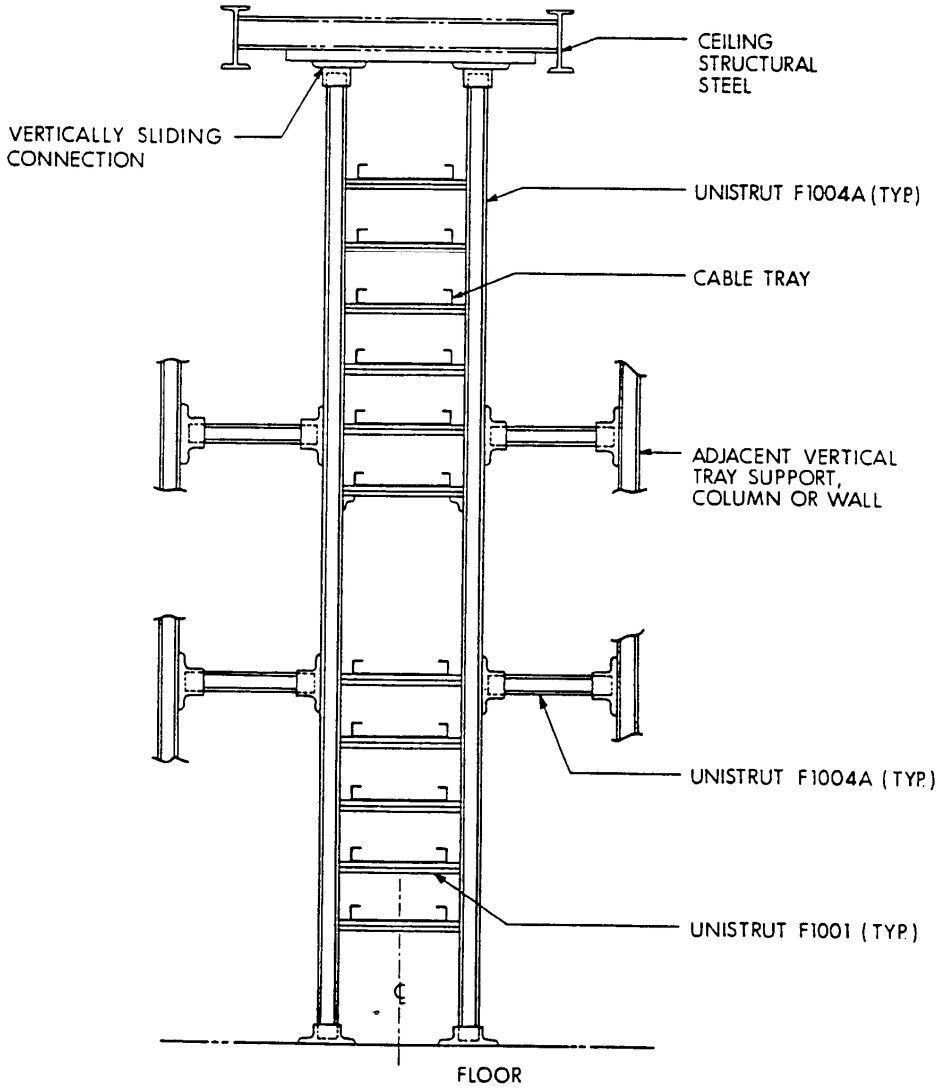

SEABROOK STATION UPDATED FINAL SAFETY ANALYSIS REPORT	Typical Ceiling-to-Floor Supported Cable Tray System	
		Figure 3.7(B)-30

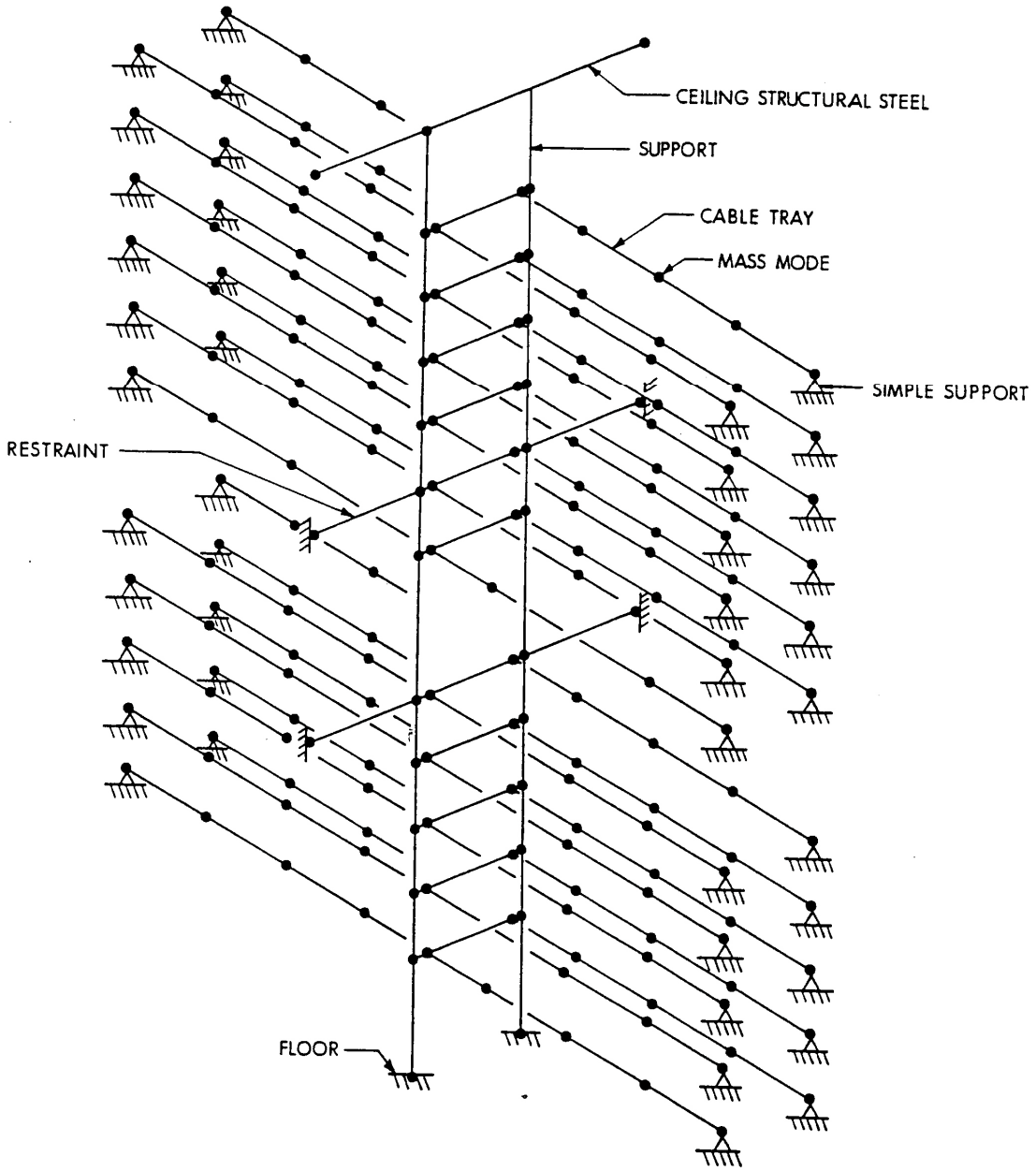

SEABROOK STATION UPDATED FINAL SAFETY ANALYSIS REPORT	Mathematical Model of Typical Ceiling-to-Floor Supported Cable Tray System	
		Figure 3.7(B)-31

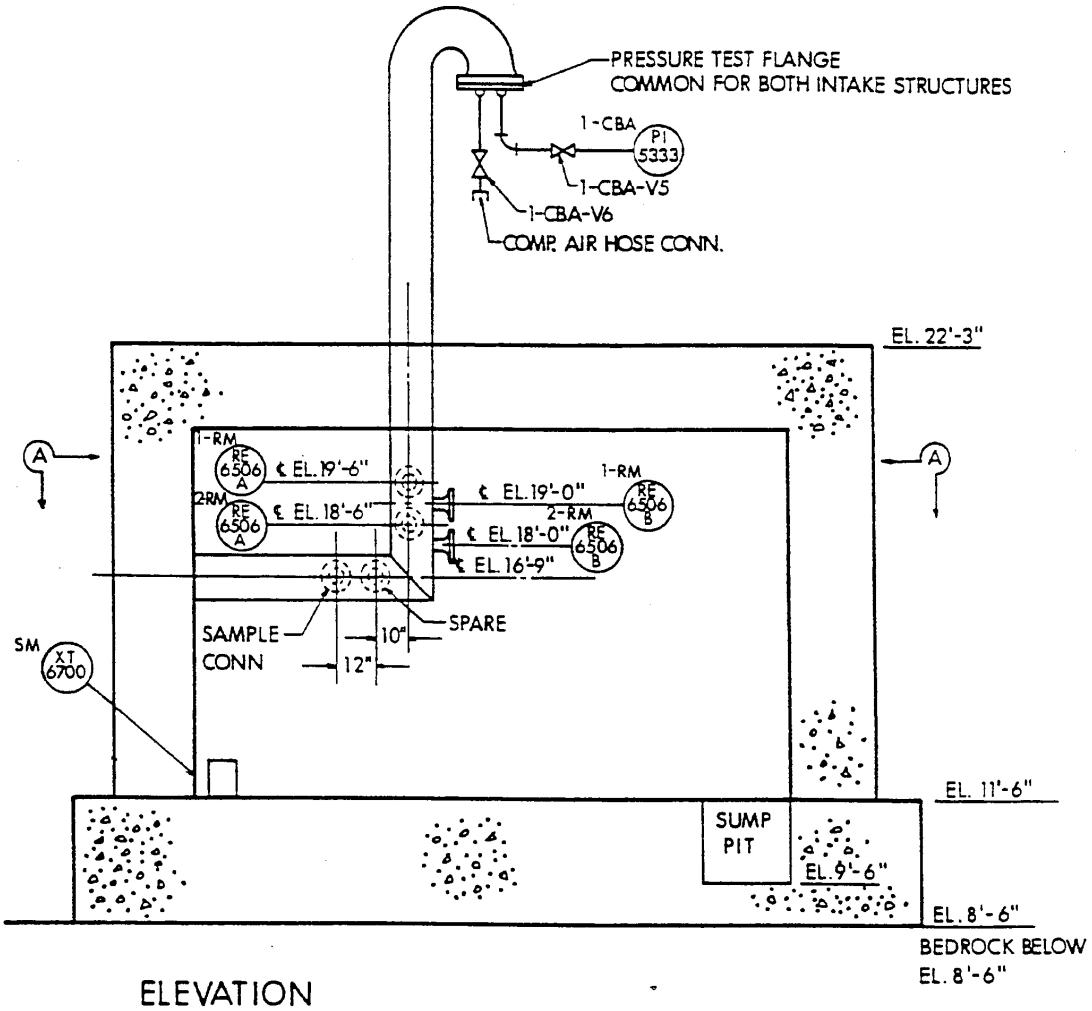

ELEVATION

SEABROOK STATION UPDATED FINAL SAFETY ANALYSIS REPORT	Mounting Detail of Triaxial Time History Accelerograph, XT-6700, in East Air Intake Structure	
		Figure 3.7(B)-32

NOTES

1. TORQUE THE INST. MOUNTING SCREW TO 40 ± 10 IN-LBS
2. TORQUE U-BOLTS TO 80 FT-LBS ± 20
3. LEVEL MOUNTING PLATE WITHIN 1/4° (1/64" IN 3/½").
4. EDGE OF MOUNTING PLATE TO BE PARALLEL WITH ℄ OF PIPE.
5. ALIGN LONG SIDE OF INSTRUMENT PARALLEL WITH THE EDGE OF MOUNTING PLATE WITHIN 3° (1/4" IN 5").

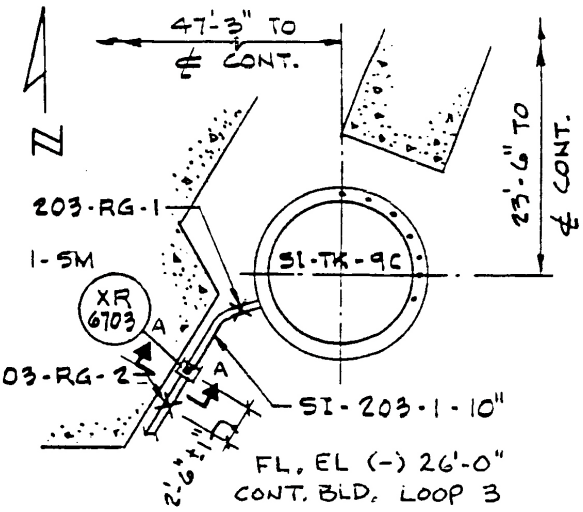

KEY PLAN
N.T.S.

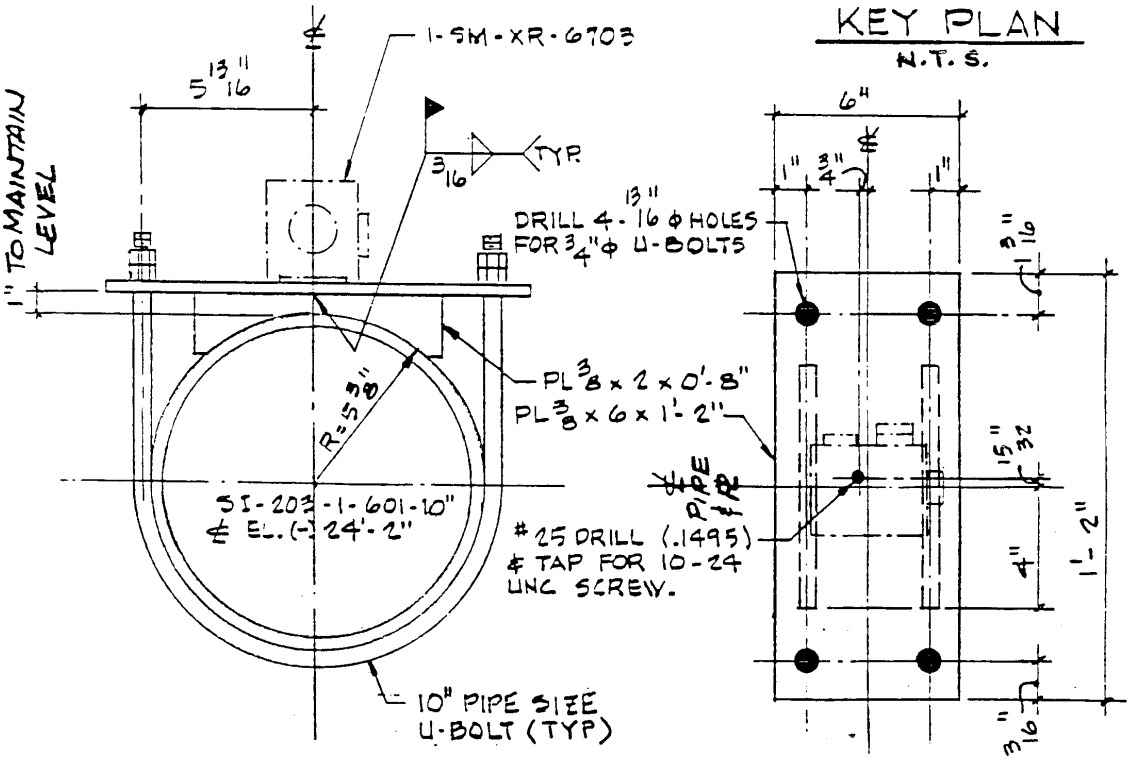

A-A

PARTIAL PLAN VIEW
N.T.S.

MOUNTING DETAIL

SEABROOK STATION UPDATED FINAL SAFETY ANALYSIS REPORT	Mounting Detail of Triaxial Peak Accelerograph, XR-6703, on Safety Injection Piping (Line 203)	
		Figure 3.7(B)-33

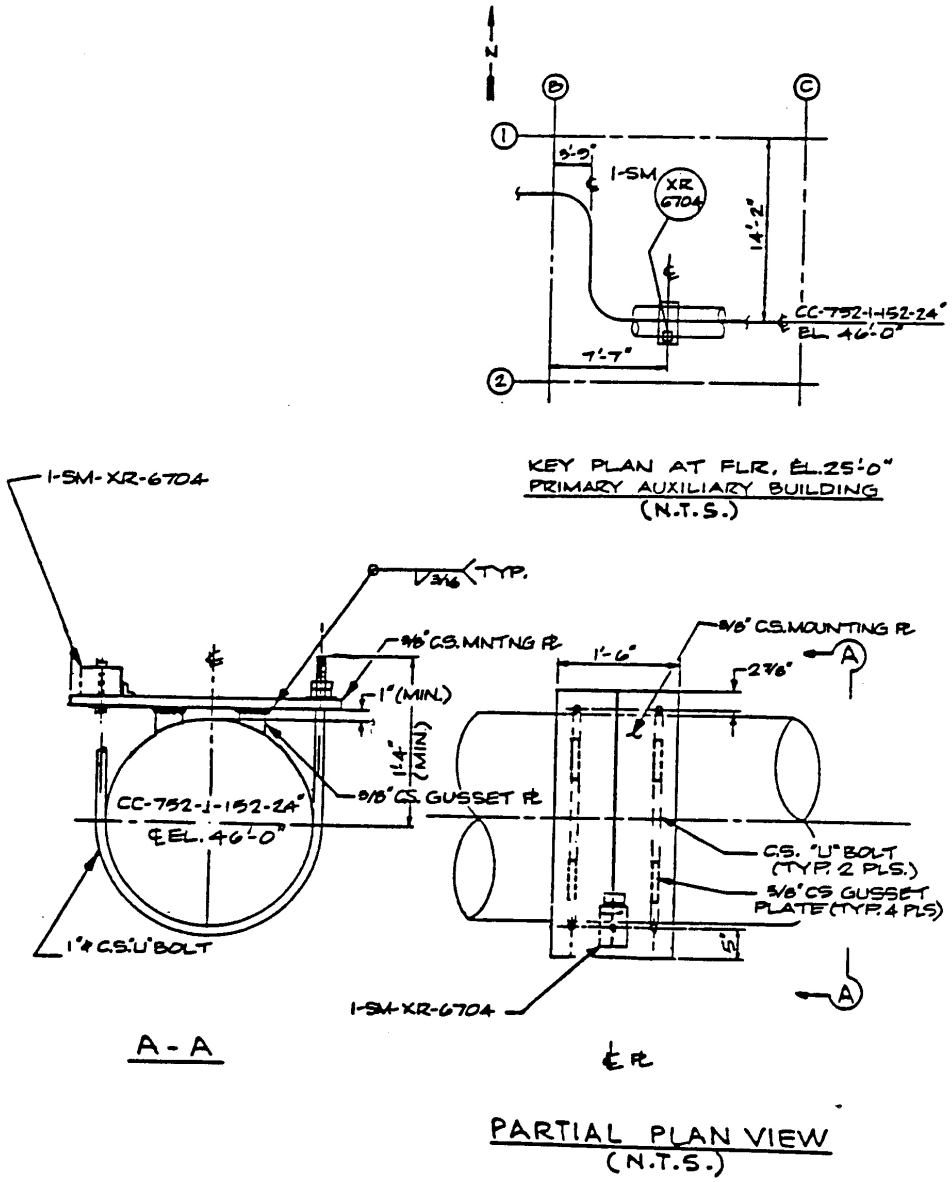

MOUNTING DETAIL

SEABROOK STATION UPDATED FINAL SAFETY ANALYSIS REPORT	Mounting Detail of Triaxial Peak Accelerograph, XR-6704, on PCCW Piping	
		Figure 3.7(B)-34

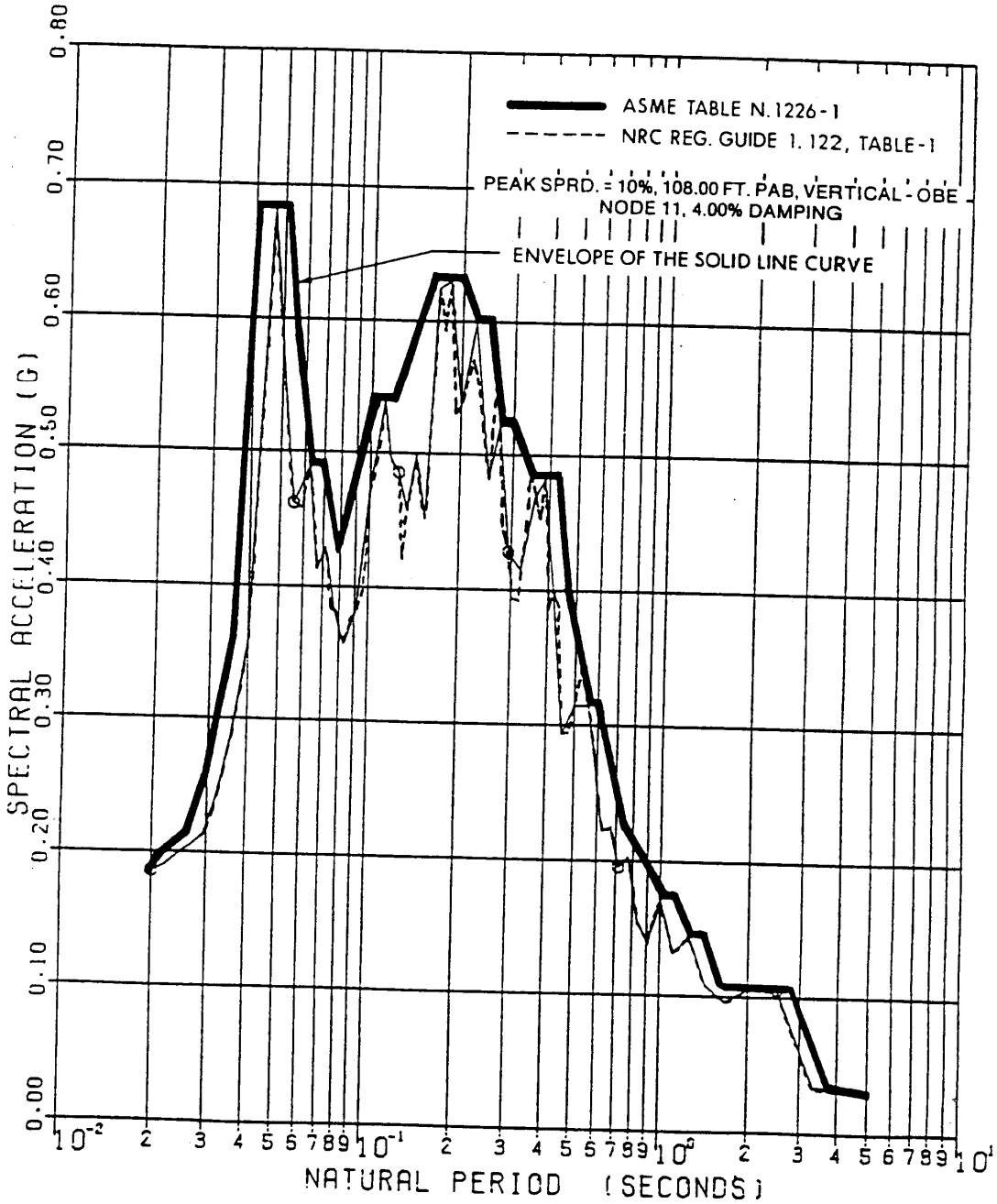

SEABROOK STATION UPDATED FINAL SAFETY ANALYSIS REPORT	Primary Auxiliary Building Amplified Response Spectra (Vertical) OBE, 4% Damping	
		Figure 3.7(B)-35

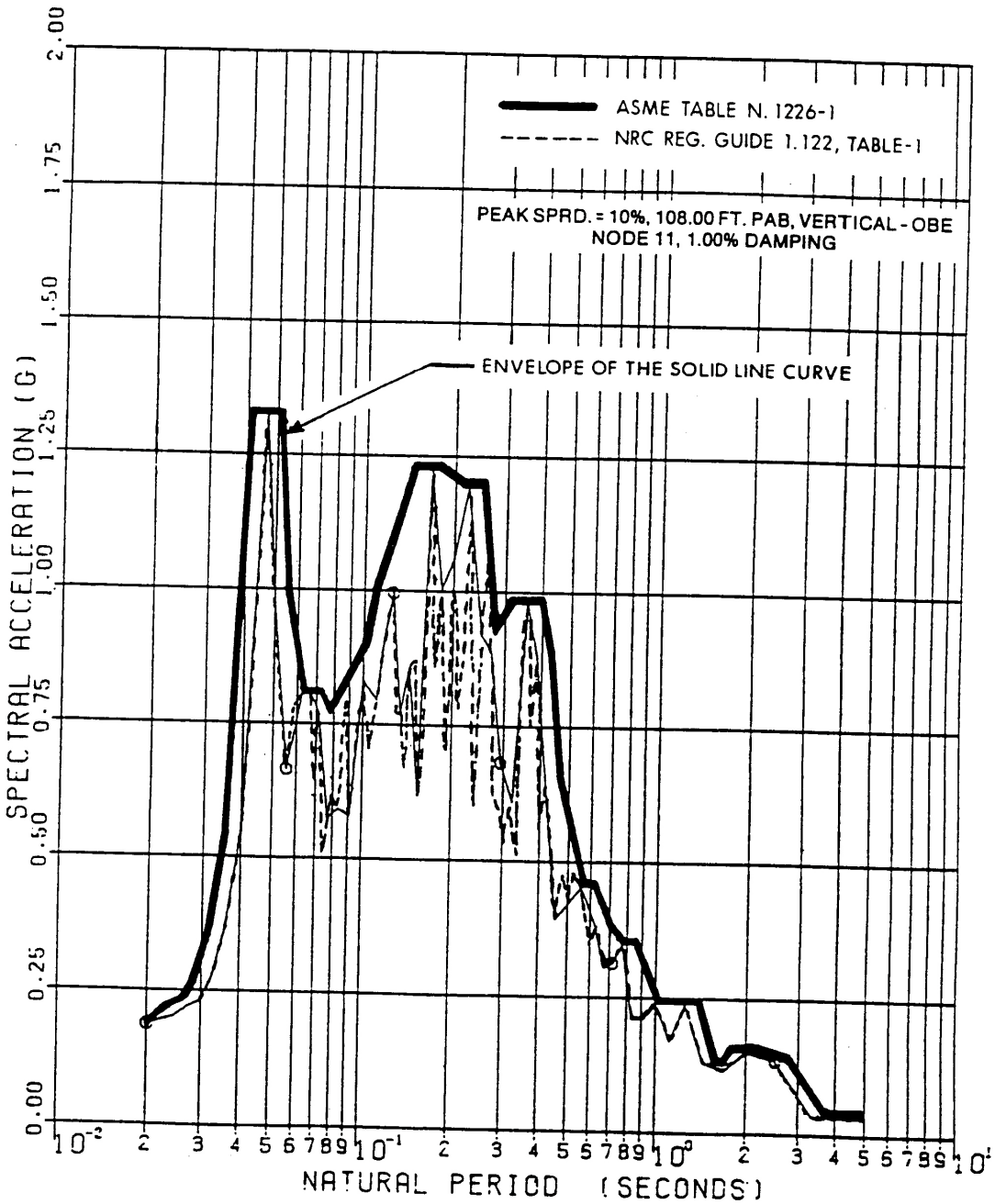

SEABROOK STATION UPDATED FINAL SAFETY ANALYSIS REPORT	Primary Auxiliary Building Amplified Response Spectra (Vertical) OBE, 1% Damping	
		Figure 3.7(B)-36

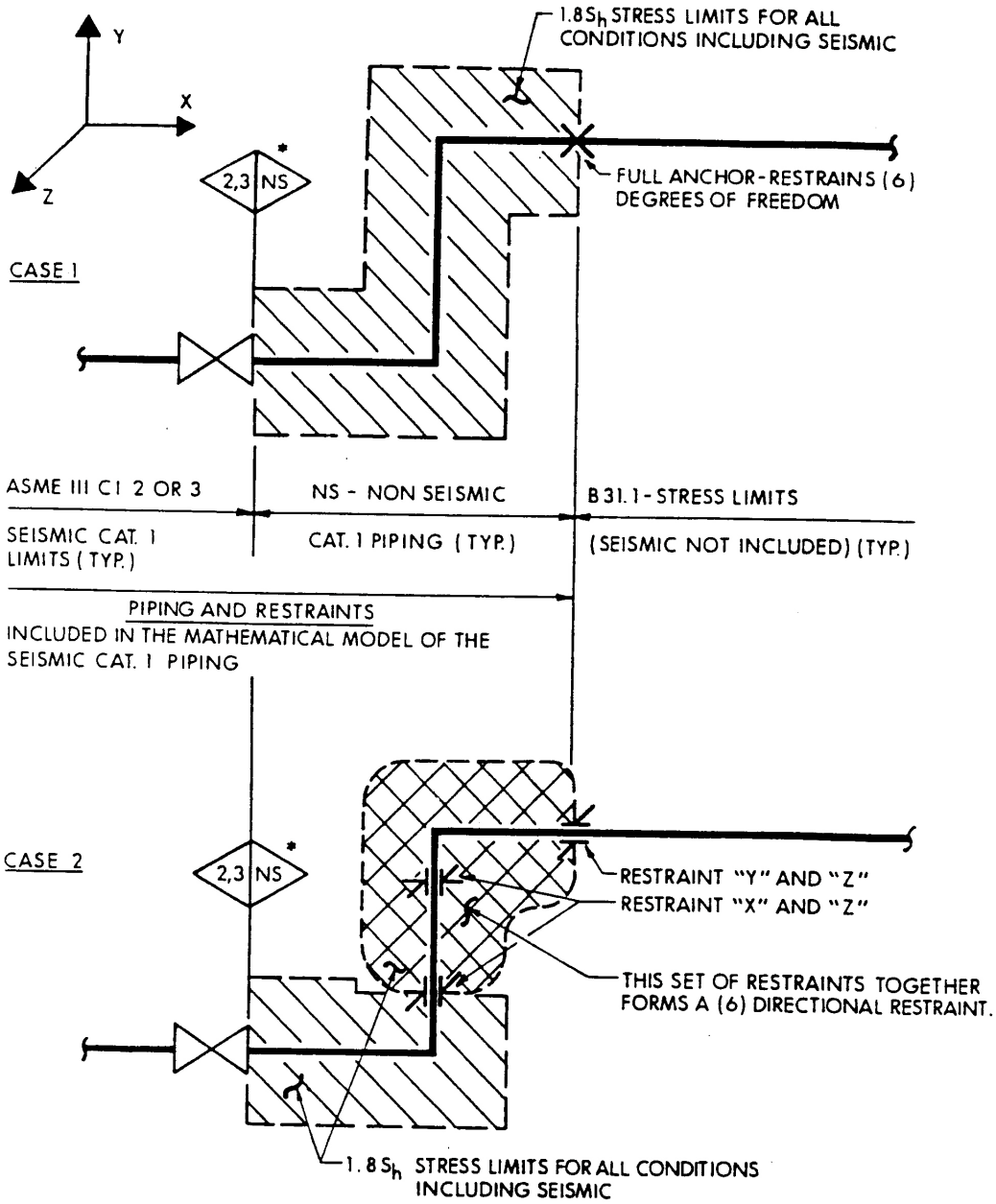

* SYMBOL INDICATES BOUNDARY BETWEEN ASME III CLASS 2 OR 3 AND NON-SEISMIC PIPING.

SEABROOK STATION UPDATED FINAL SAFETY ANALYSIS REPORT	Typical Pipe Support Systems	
		Figure 3.7(B)-37

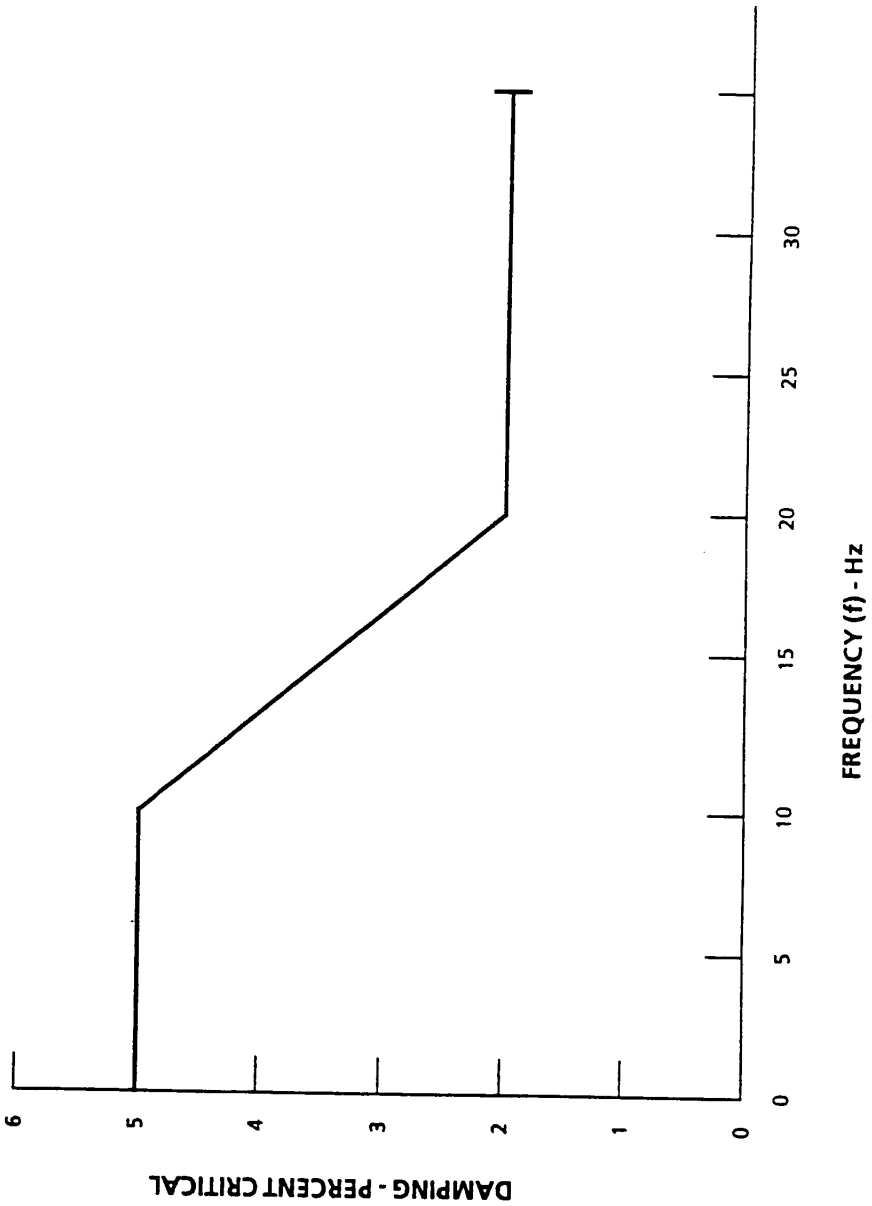

SEABROOK STATION UPDATED FINAL SAFETY ANALYSIS REPORT	Alternative to Regulatory Guide 1.61 Damping Values	
		Figure 3.7(B)-38

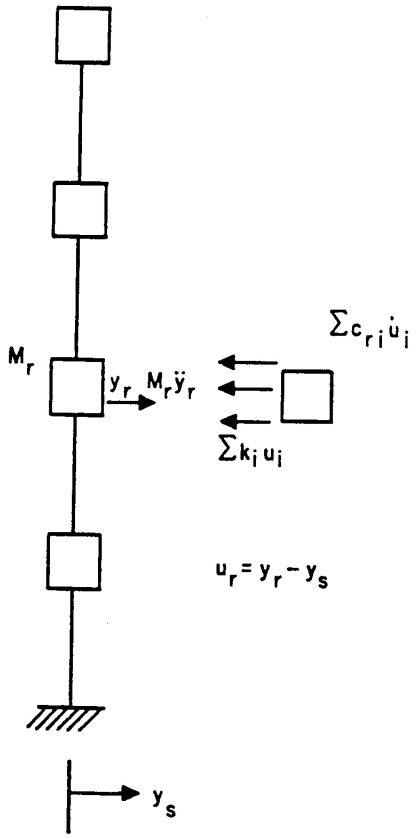

SEABROOK STATION UPDATED FINAL SAFETY ANALYSIS REPORT	Multi-Degree of Freedom System	
		Figure 3.7(N)-1

See 101401

SEABROOK STATION UPDATED FINAL SAFETY ANALYSIS REPORT	Containment Structure Mat Reinforcing [2 Sheets]	
		Figure 3.8-1 Sh. 1 of 2

See 101402

See 101435

SEABROOK STATION UPDATED FINAL SAFETY ANALYSIS REPORT	Containment Structure Typical Reinforcing	
		Figure 3.8-2

See 101441
See 101444

SEABROOK STATION UPDATED FINAL SAFETY ANALYSIS REPORT	Containment Structure Equipment Hatch Typical Reinforcing [2 Sheets]	
		Figure 3.8-3 Sh. 1 of 2

See 101440

See 101442

SEABROOK STATION UPDATED FINAL SAFETY ANALYSIS REPORT	Containment Structure Personnel Air Lock Typical Reinforcing [2 Sheets]	
		Figure 3.8-4 Sh. 1 of 2

See 101443

See 101461

See 101463

See 101438

See 101436

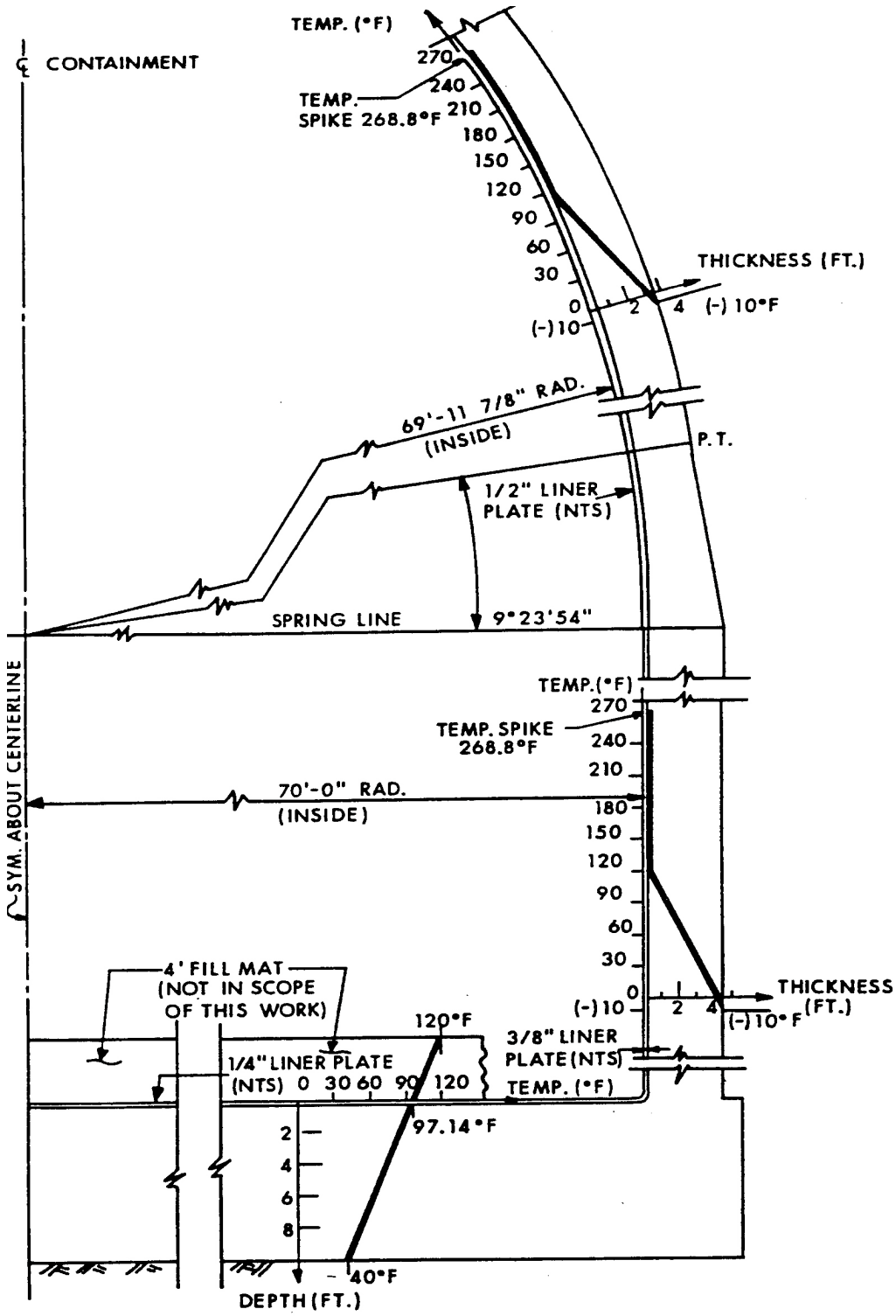

SEABROOK STATION UPDATED FINAL SAFETY ANALYSIS REPORT	Design Temperature Gradient through Containment Wall	
		Figure 3.8-8

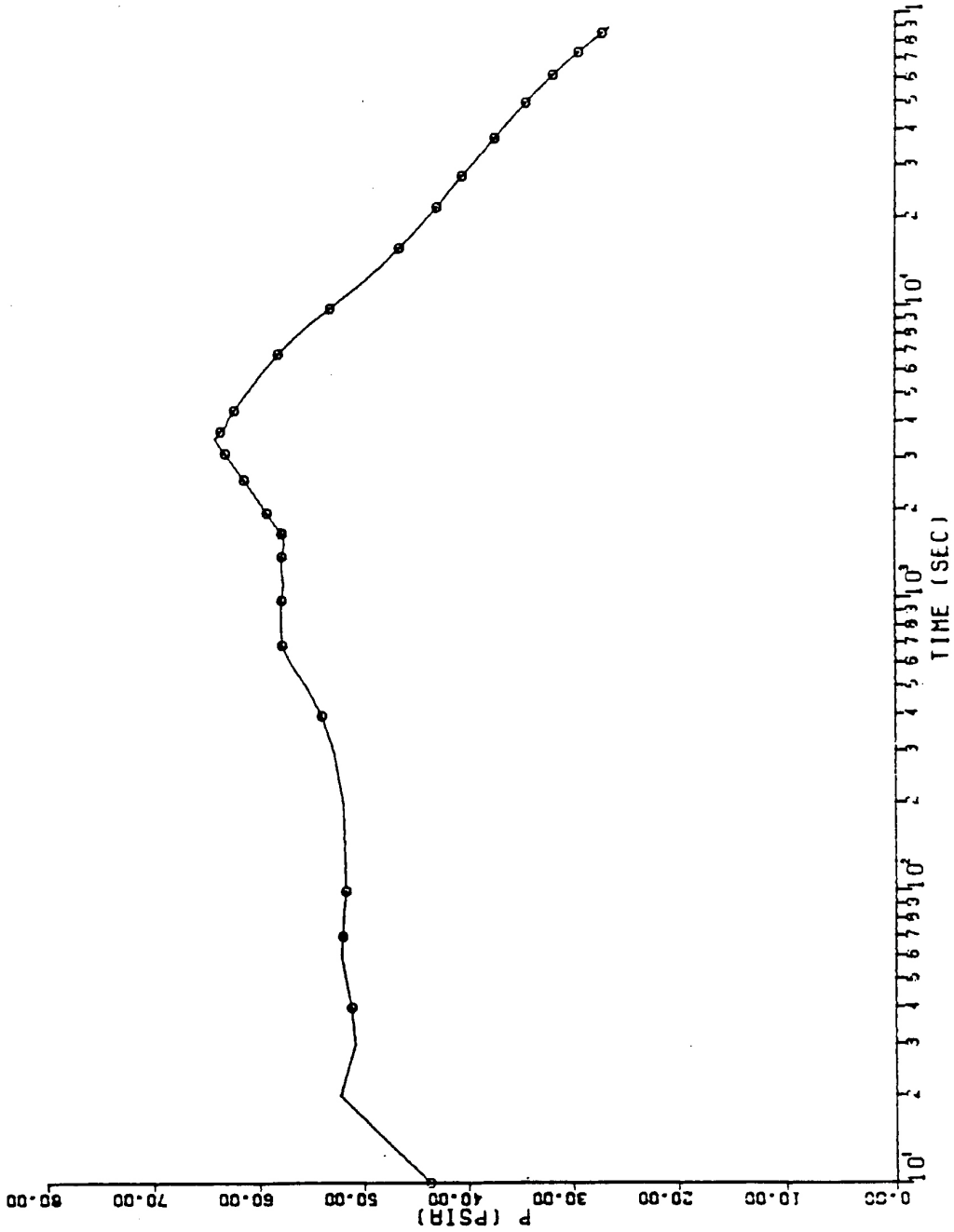

SEABROOK STATION UPDATED FINAL SAFETY ANALYSIS REPORT	Containment Pressure Transients Following a LOCA	
		Figure 3.8-9

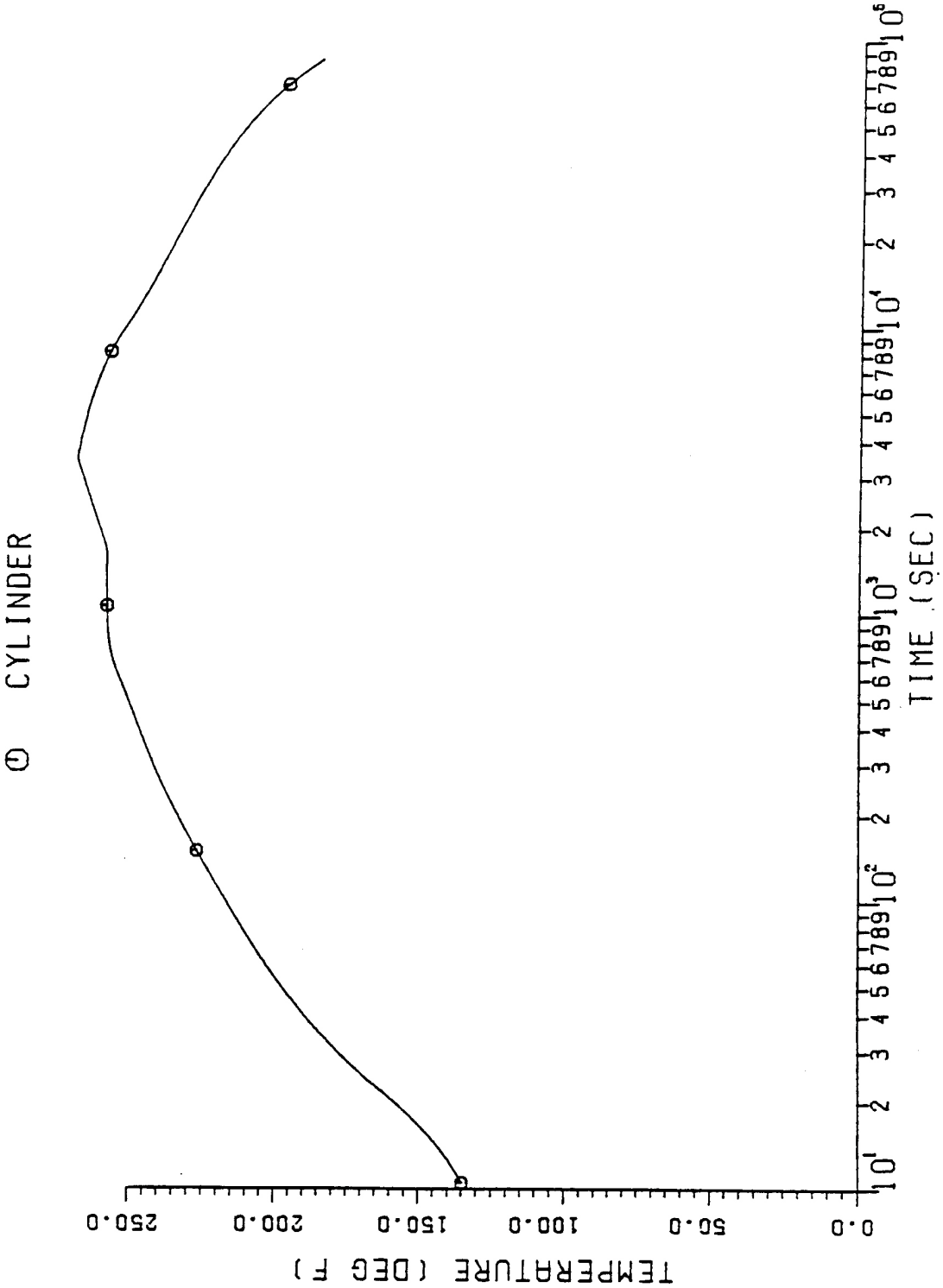

SEABROOK STATION UPDATED FINAL SAFETY ANALYSIS REPORT	Containment Cylinder Liner Temperature Transients Curve	
		Figure 3.8-10

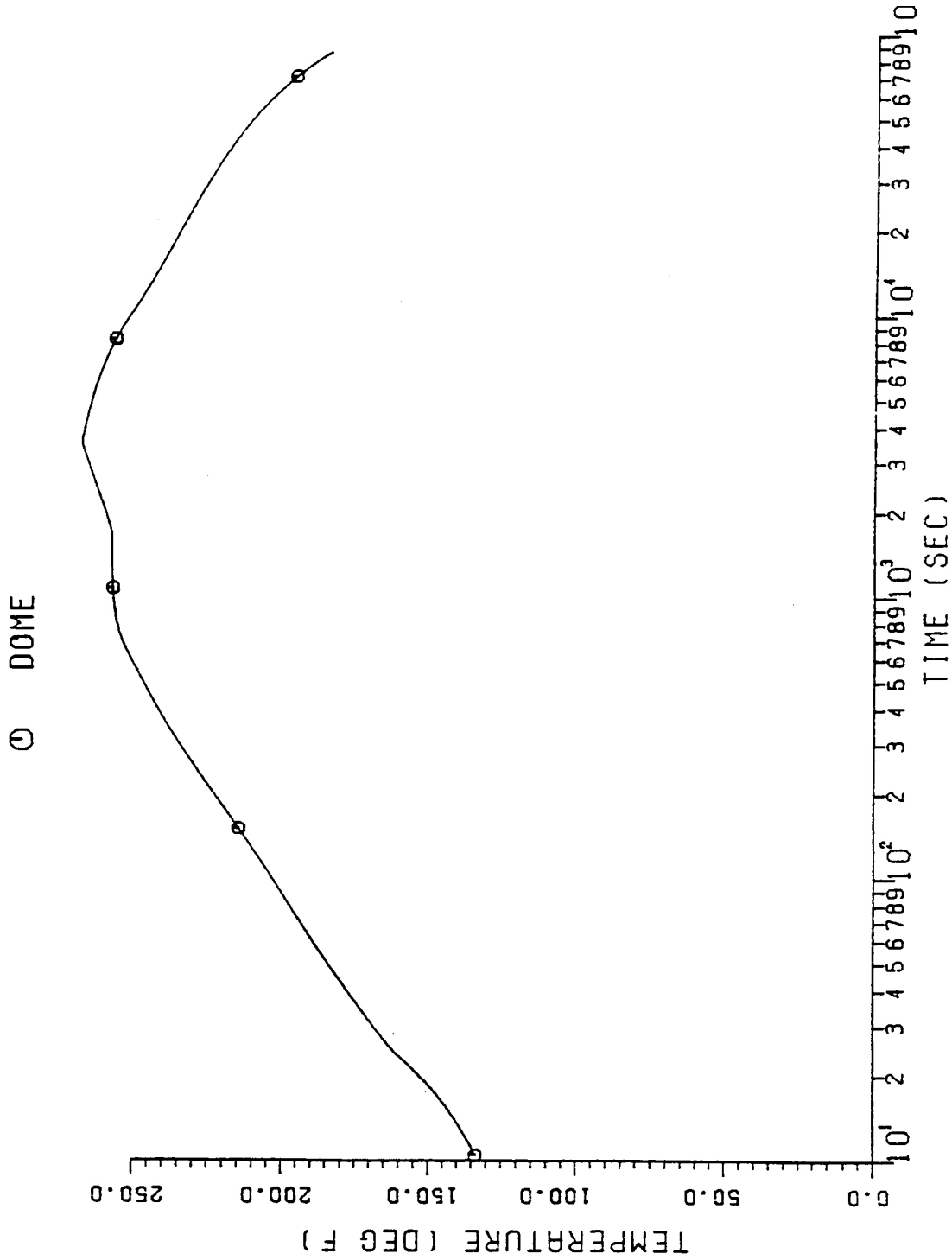

SEABROOK STATION UPDATED FINAL SAFETY ANALYSIS REPORT	Containment Dome Liner Temperature Transients Curve	
		Figure 3.8-11

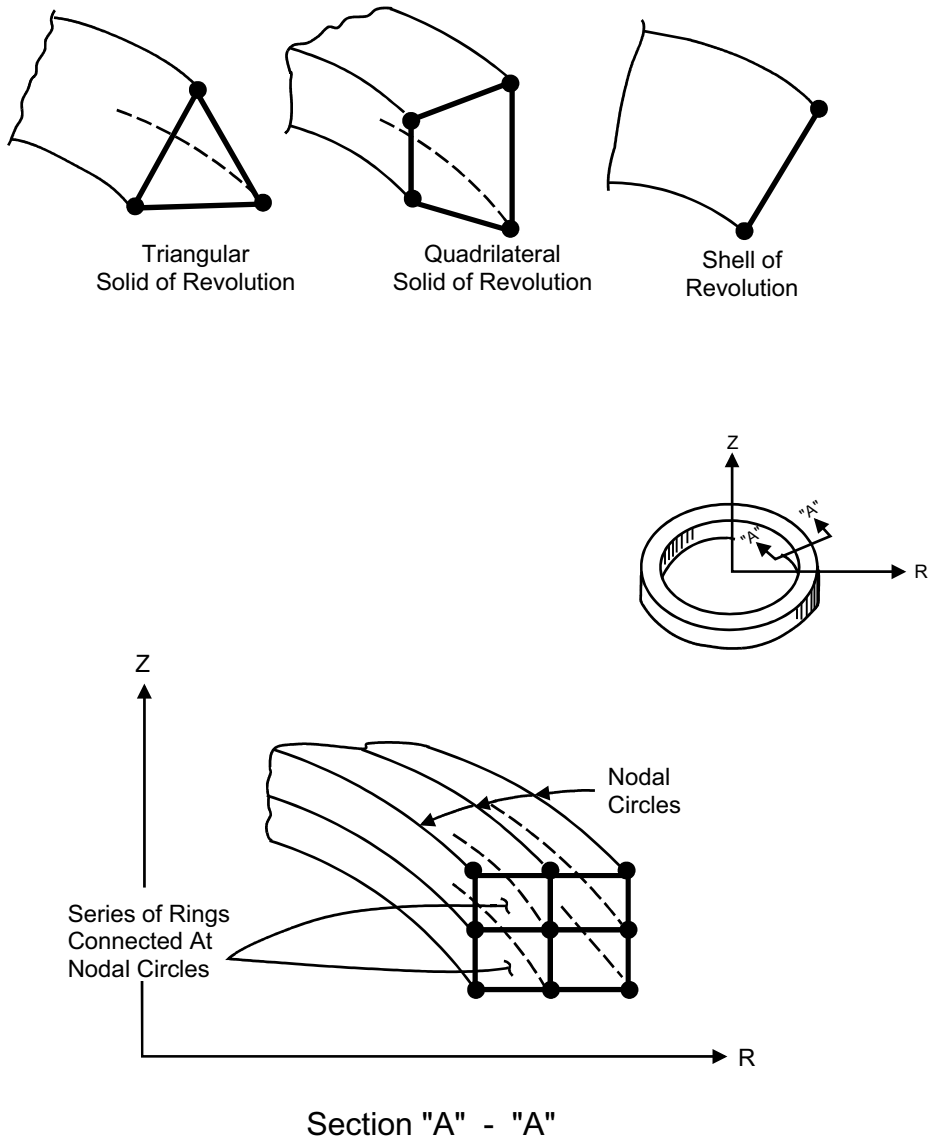

G:\Word\Images_P\UFSAR\3812.ds4

SEABROOK STATION UPDATED FINAL SAFETY ANALYSIS REPORT	Axisymetric Modeling Elements	
		Figure 3.8-12

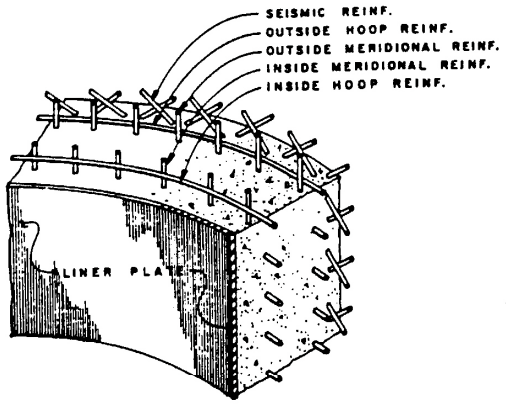

TYPICAL SECTION THROUGH REINFORCED CONCRETE WALL

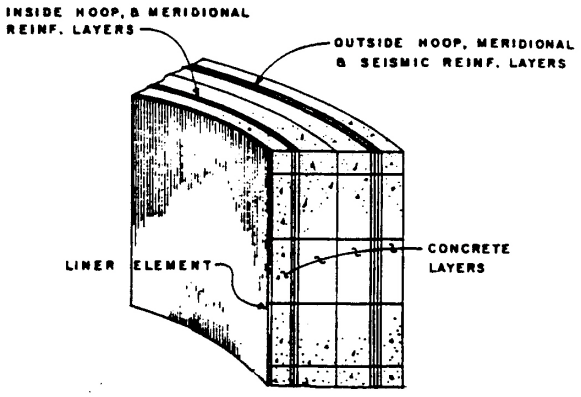

EQUIVALENT LAMINATED CONTAINMENT WALL

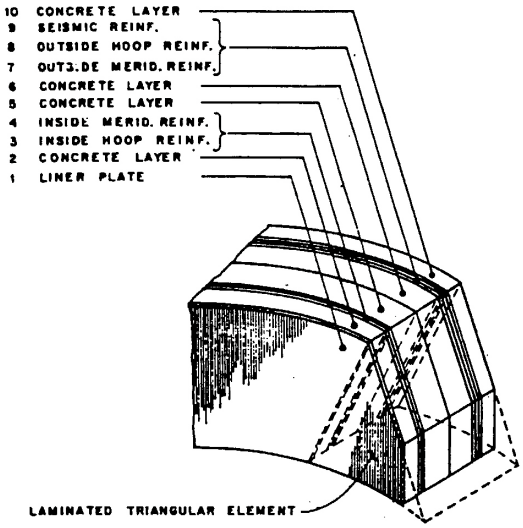

IDEALIZED MATERIAL MODEL

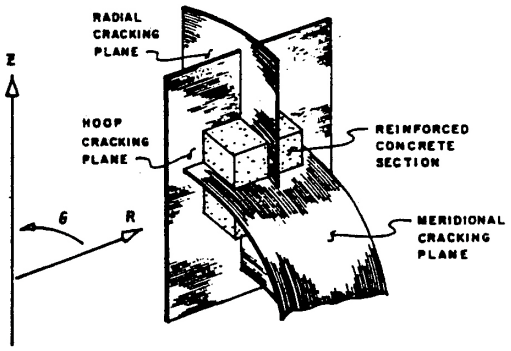

CONCRETE CRACKING PLANES AND ASSOCIATED COORDINATE DIRECTIONS

SEABROOK STATION UPDATED FINAL SAFETY ANALYSIS REPORT	Reinforced Concrete Idealization	
		Figure 3.8-13

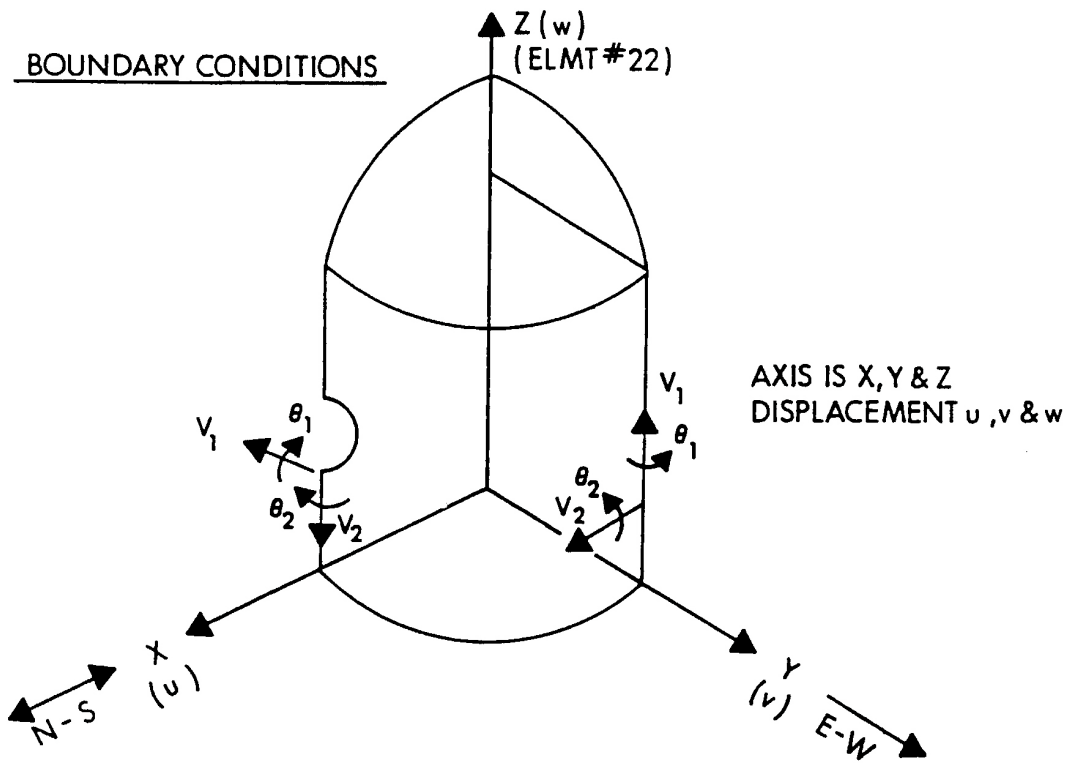

SEABROOK STATION UPDATED FINAL SAFETY ANALYSIS REPORT	Boundary Conditions for Equipment Hatch Analysis - Model Sketch	
		Figure 3.8-14

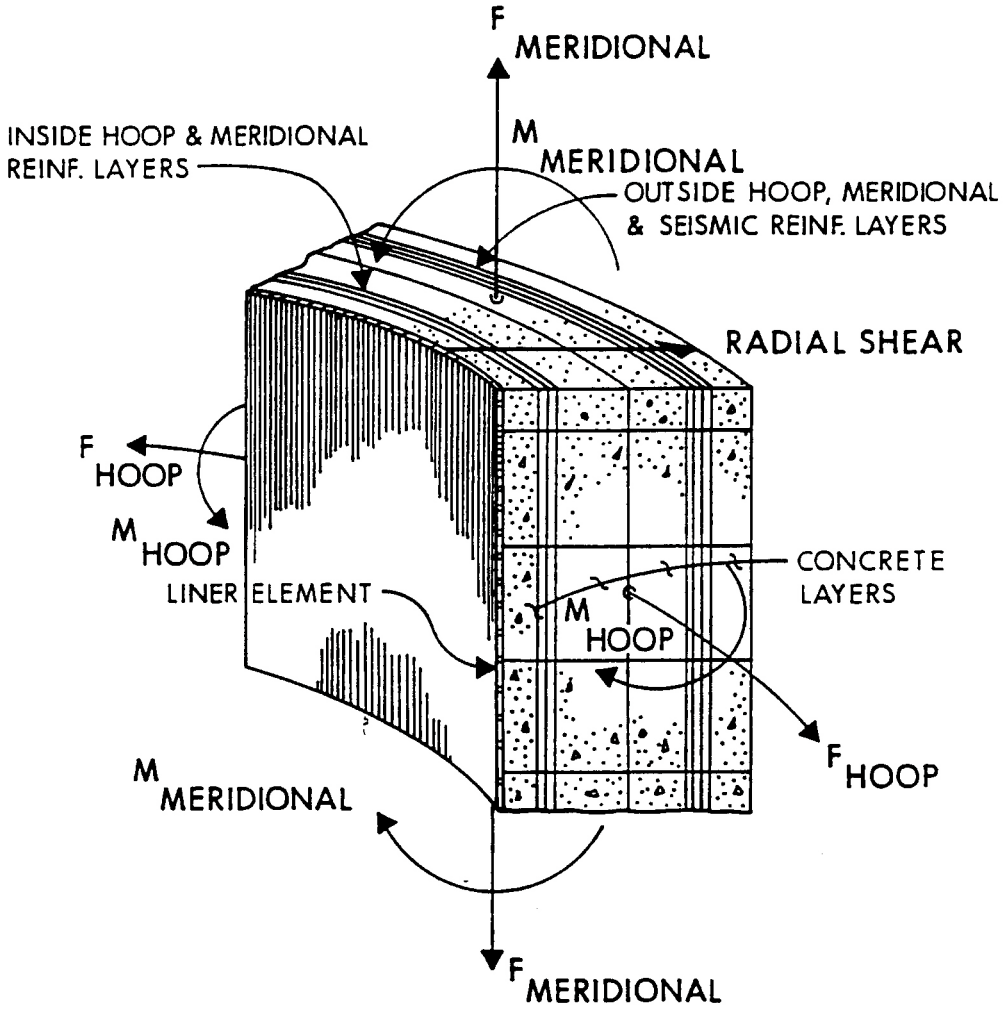

SEABROOK STATION UPDATED FINAL SAFETY ANALYSIS REPORT	Shell Section Illustrating Computed Force and Moment Resultants	
		Figure 3.8-15

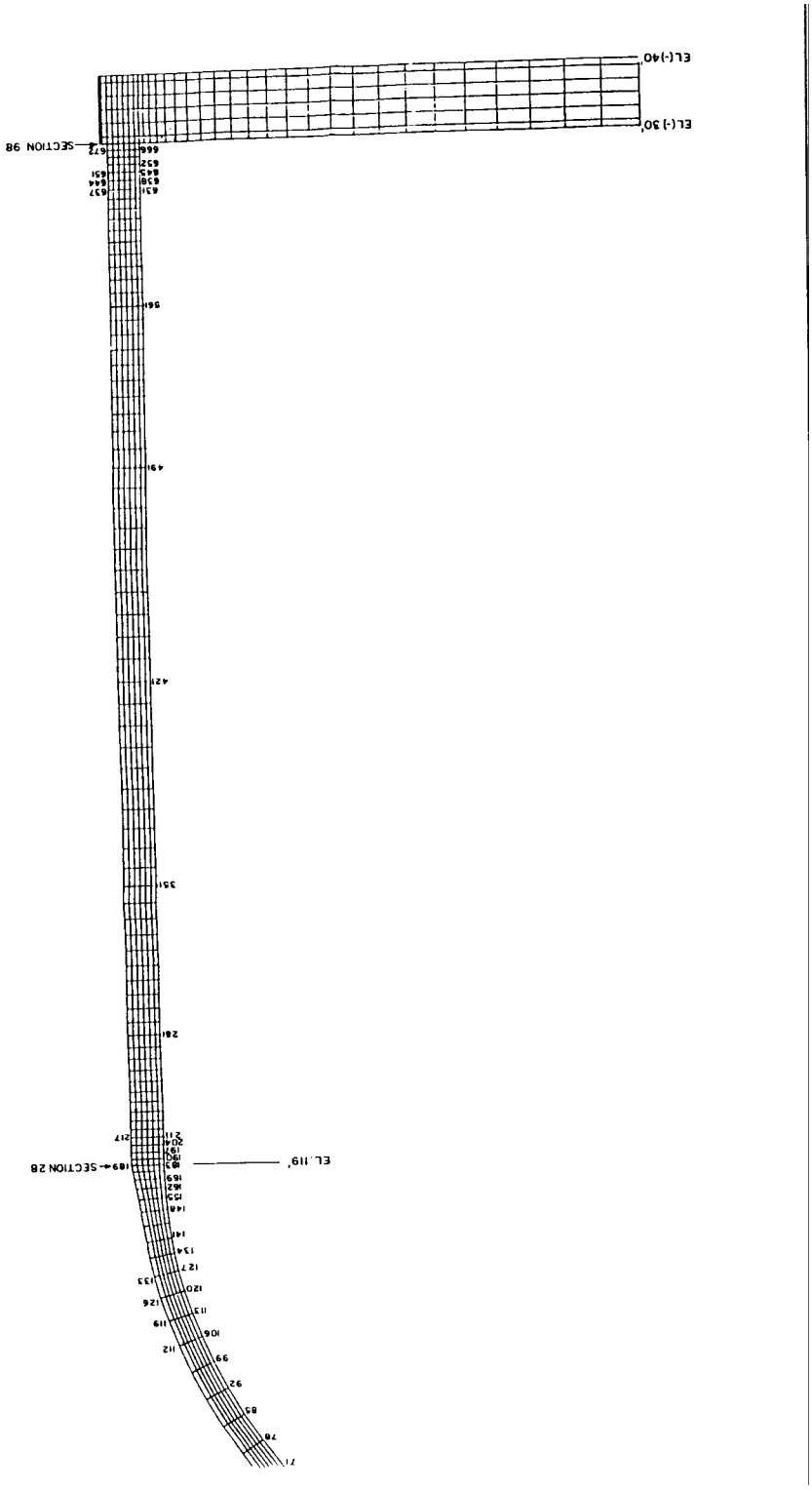

SEABROOK STATION UPDATED FINAL SAFETY ANALYSIS REPORT	Containment Axisymetric Model	
		Figure 3.8-16

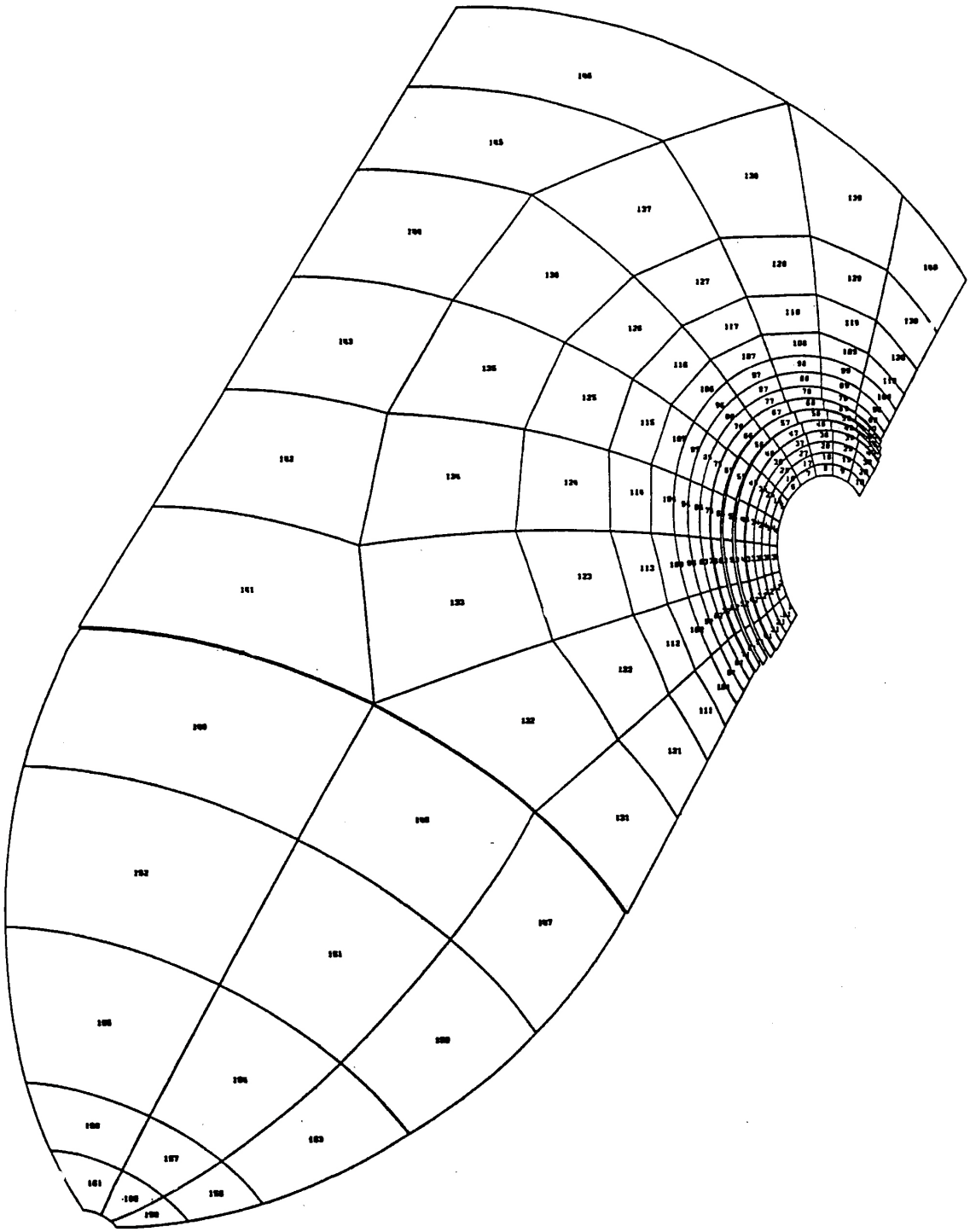

SEABROOK STATION UPDATED FINAL SAFETY ANALYSIS REPORT	Three-Dimensional Finite Element Model for Equipment Hatch Analysis	
		Figure 3.8-17

Rebar in Membrane Region From
El. 80' - 0" To El. 119" -0"

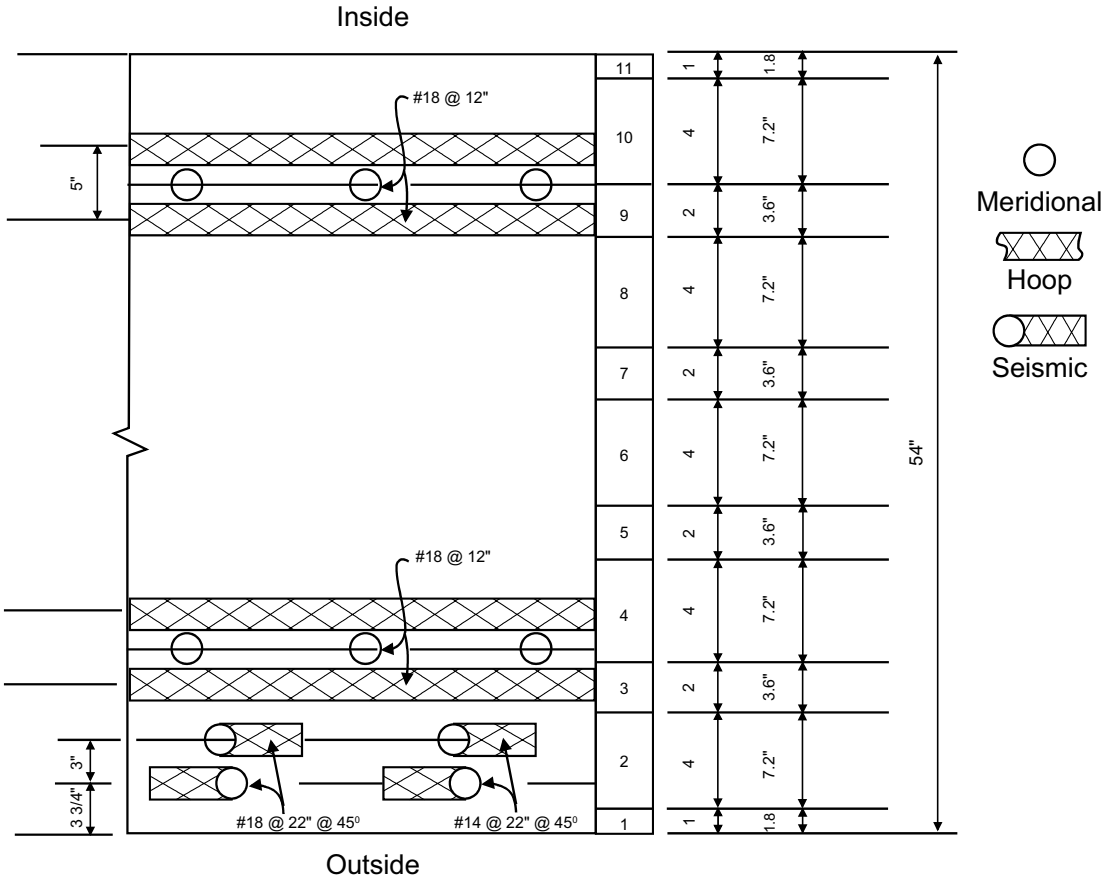

1/30 x 54" = 1.8"
2/30 x 54" = 3.6"
4/30 x 54" = 7.2"

Section C-C

1" -10"

G:\Word\Images_P\UFSAR\3818.ds4

SEABROOK STATION UPDATED FINAL SAFETY ANALYSIS REPORT	Layered Cross Section Model for MARC-CDC Element 22	
		Figure 3.8-18

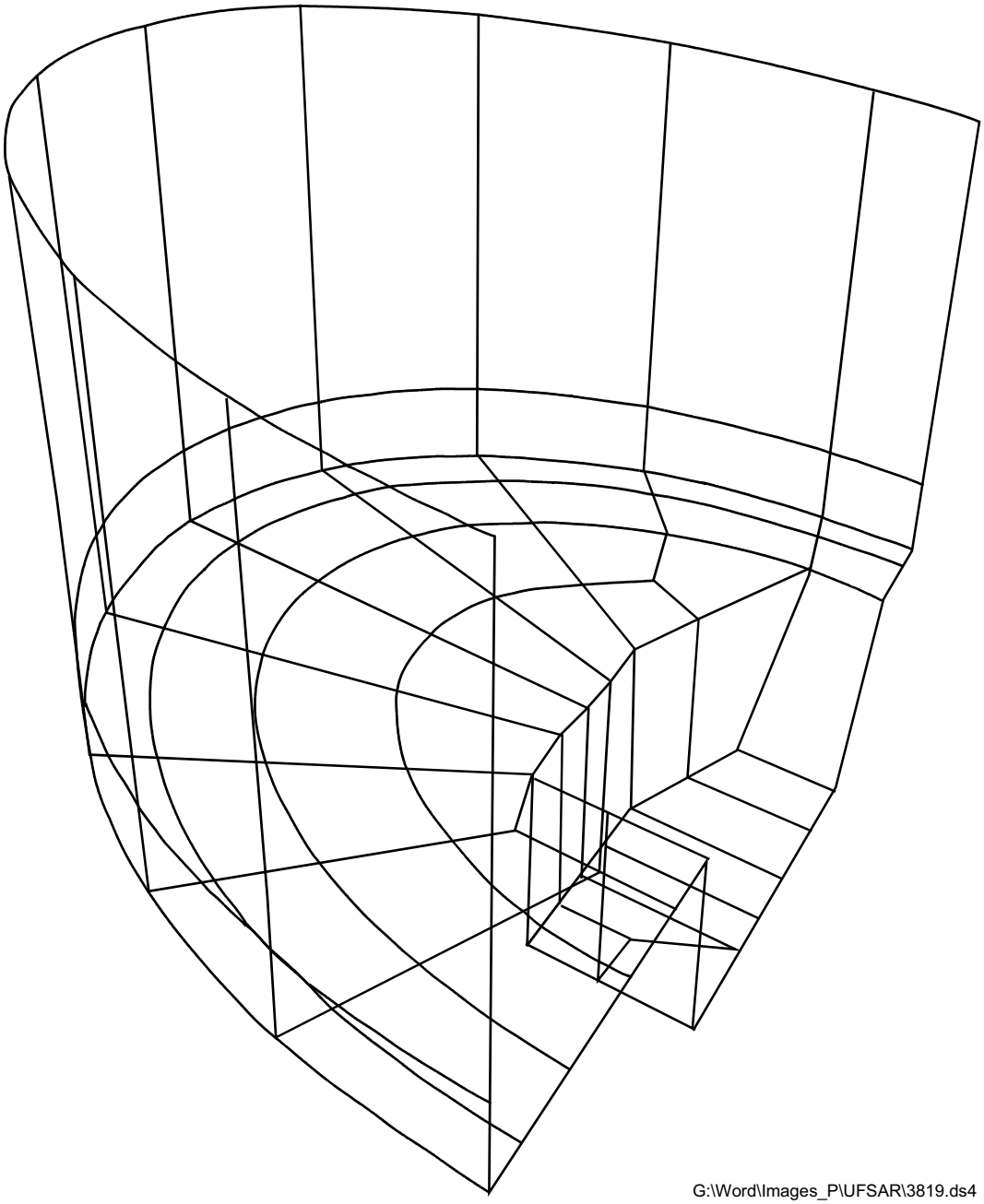

SEABROOK STATION UPDATED FINAL SAFETY ANALYSIS REPORT	Finite Element Model of Containment Mat	
		Figure 3.8-19

See 101496

SEABROOK STATION UPDATED FINAL SAFETY ANALYSIS REPORT	Containment Structure Personnel Airlock	
		Figure 3.8-20

See 101496

SEABROOK STATION UPDATED FINAL SAFETY ANALYSIS REPORT	Containment Structure Equipment Hatch with Personnel Airlock	
		Figure 3.8-21

See 805575

SEABROOK STATION UPDATED FINAL SAFETY ANALYSIS REPORT	Typical High Energy Piping Penetration	
		Figure 3.8-22

See 805575

SEABROOK STATION UPDATED FINAL SAFETY ANALYSIS REPORT	Typical Moderate Energy Piping Penetration	
		Figure 3.8-23

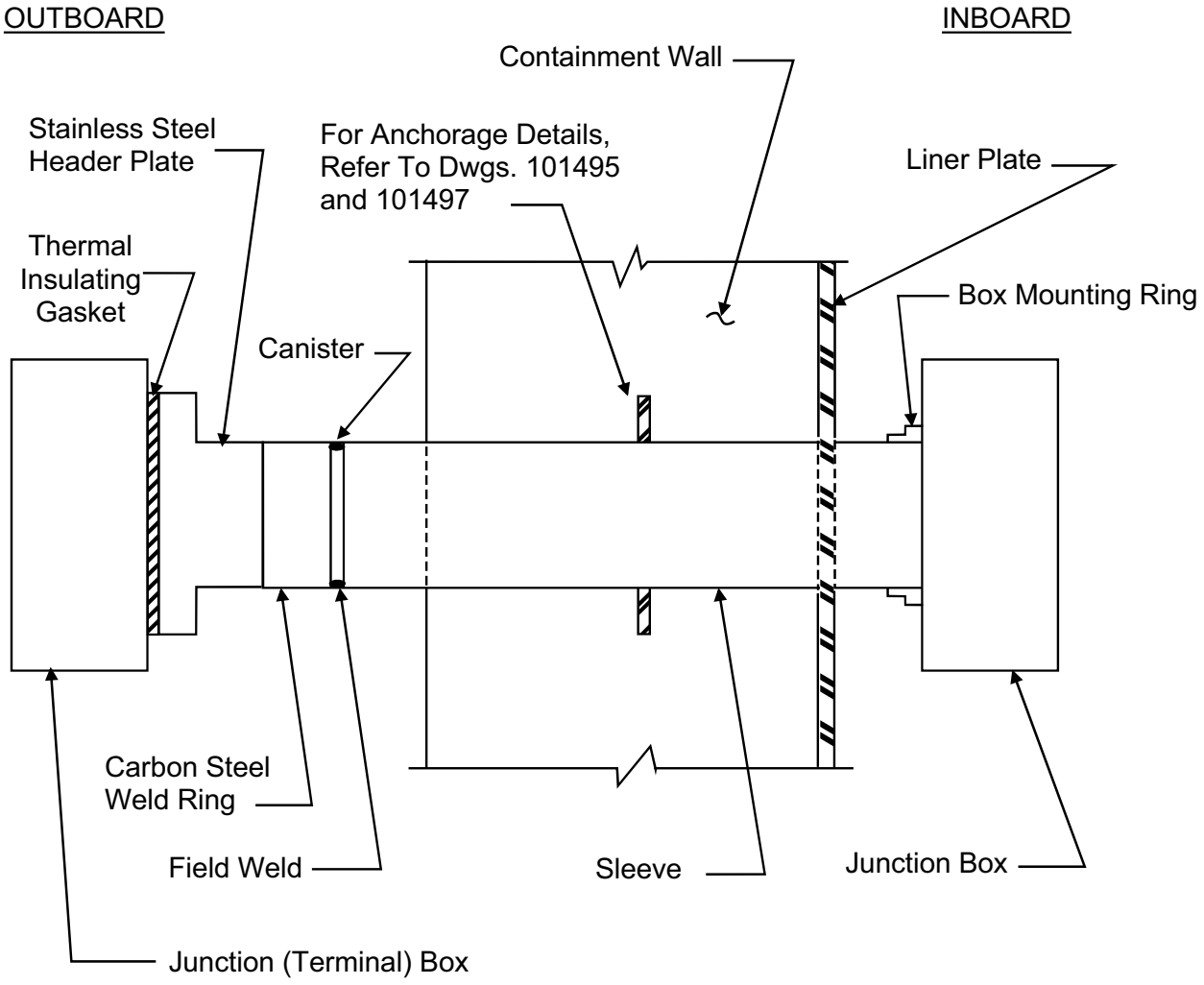

G:\Word\Images\UFSAR\3824.ds4

SEABROOK STATION UPDATED FINAL SAFETY ANALYSIS REPORT	Typical Electrical Penetration	
		Figure 3.8-24

See 805573

SEABROOK STATION UPDATED FINAL SAFETY ANALYSIS REPORT	Typical Ventilation Penetration	
		Figure 3.8-25

REV 03

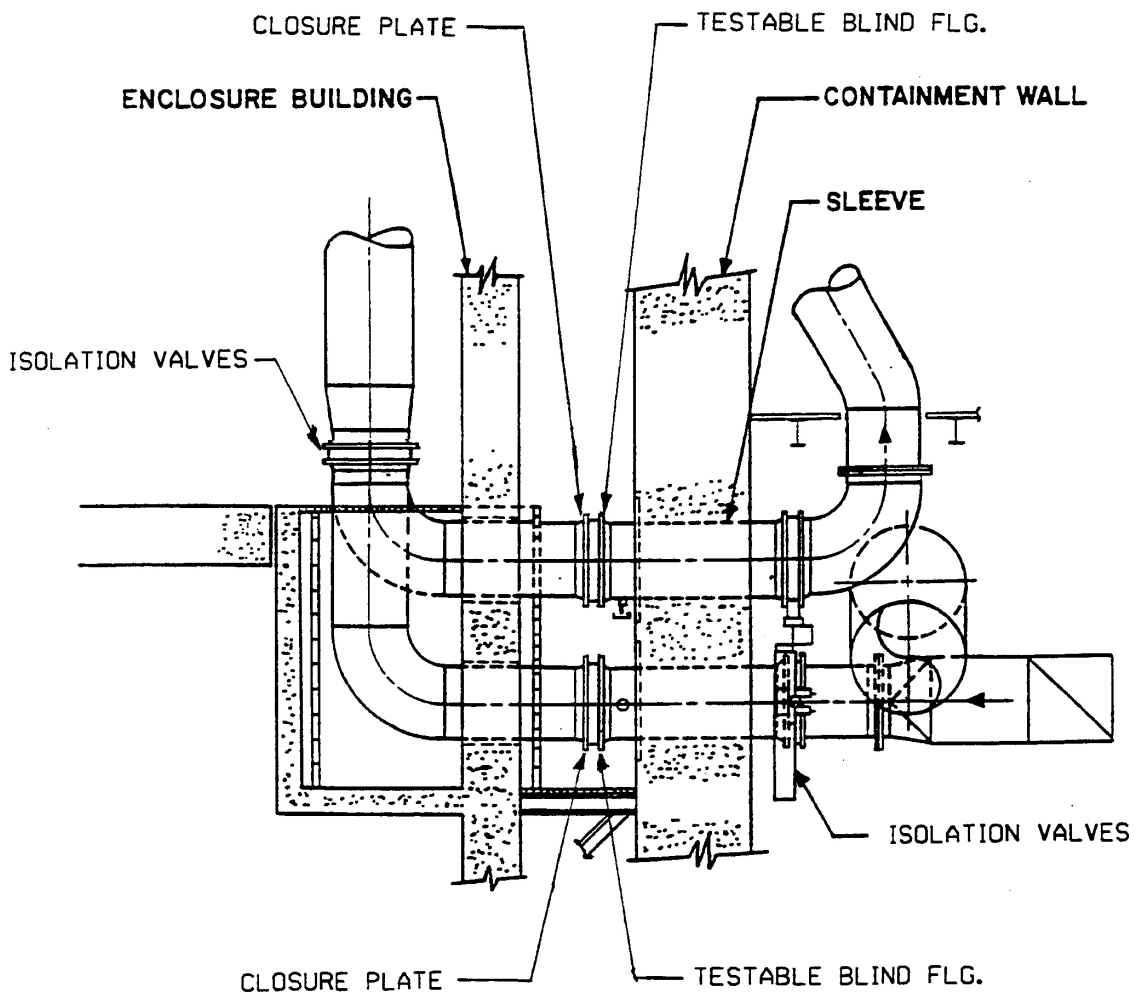

SEABROOK STATION UPDATED FINAL SAFETY ANALYSIS REPORT	Typical Ventilation Penetration	
		Figure 3.8-26

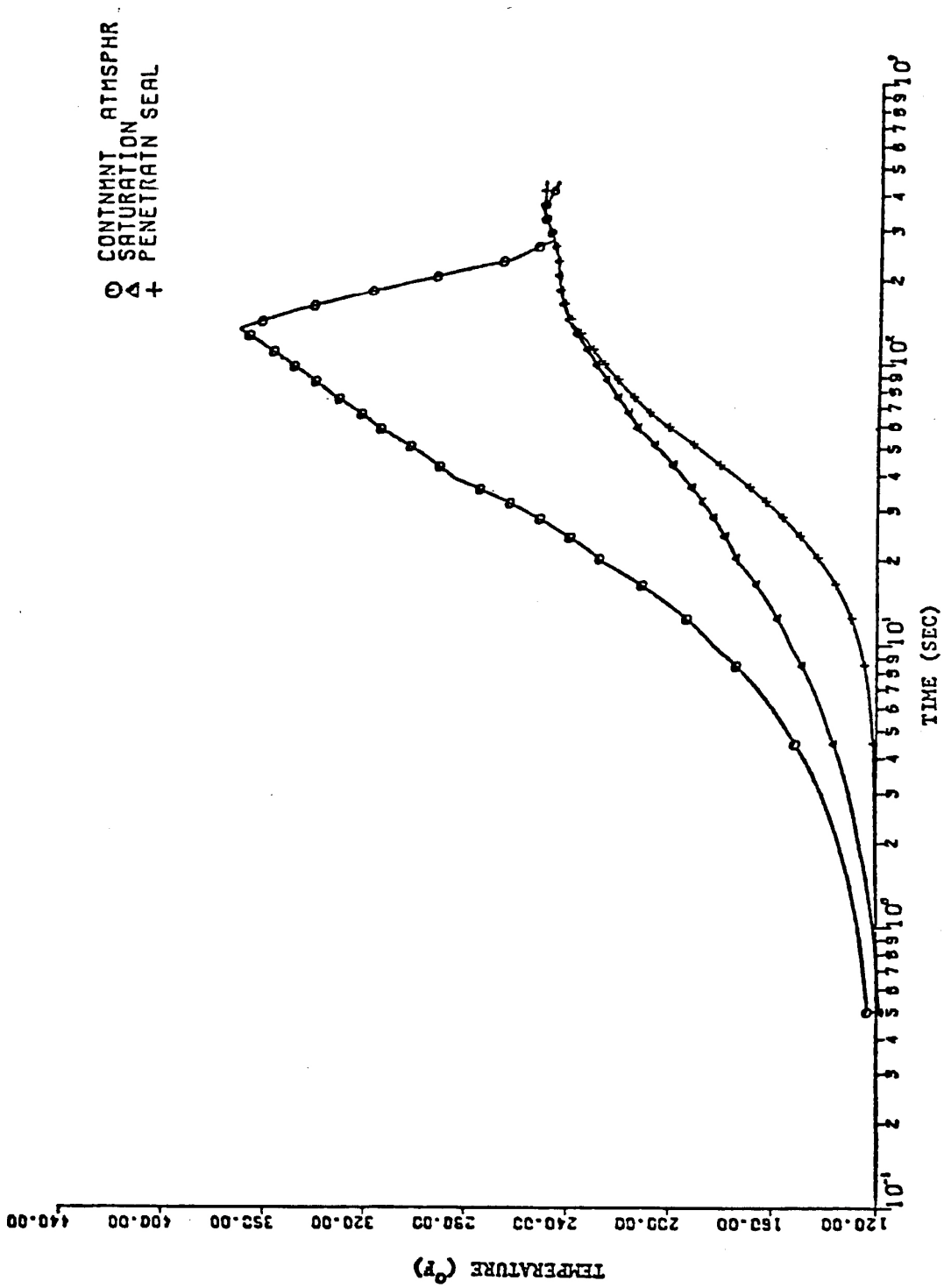

SEABROOK STATION UPDATED FINAL SAFETY ANALYSIS REPORT	Electrical Penetration Seal Temperature Response Following 0.84 ft^2 Split Rupture at 75% Power	
		Figure 3.8-27

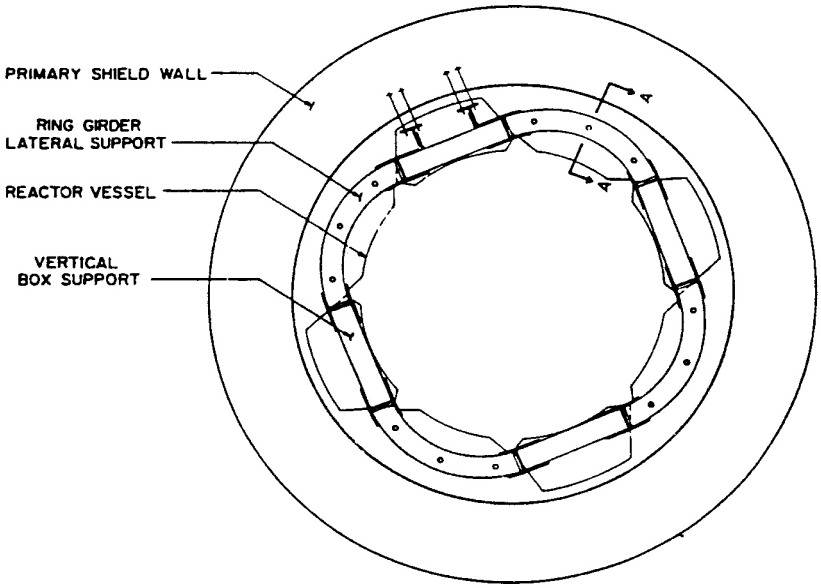

PLAN AT EL.(−)11'-0"

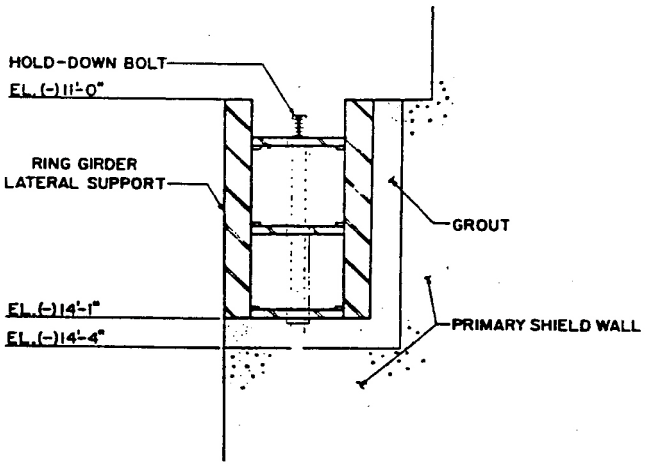

SECTION A-A

SEABROOK STATION UPDATED FINAL SAFETY ANALYSIS REPORT	Reactor Vessel Lateral Support	
		Figure 3.8-28

See 101425

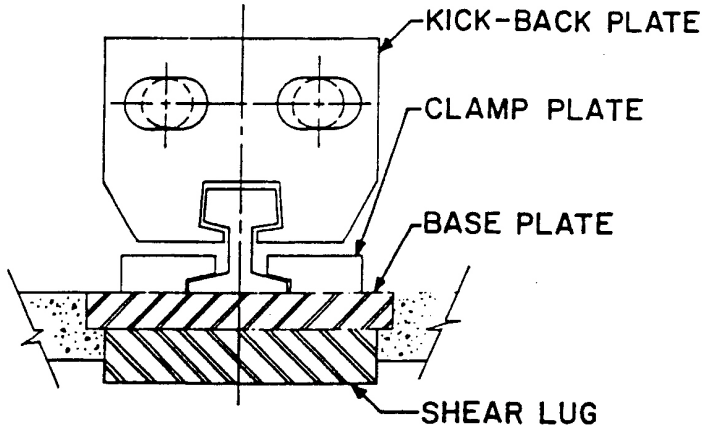

SECTION THROUGH CLAMP PLATES

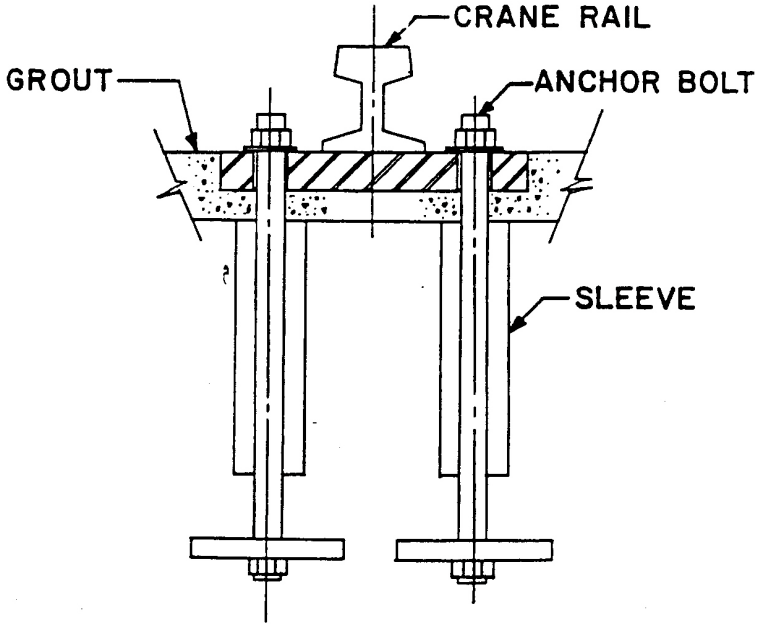

SECTION THROUGH ANCHOR BOLTS

NOTE: CLAMP PLATES AND KICK-BACK PLATES ARE ALTERNATELY SPACED 9" CENTER TO CENTER.

SEABROOK STATION UPDATED FINAL SAFETY ANALYSIS REPORT	Design of Kick-Back Plate, Clamp Plate, Base Plate and Anchor Bolts for Polar Crane	
		Figure 3.8-30

See 101334
See 101337

SEABROOK STATION UPDATED FINAL SAFETY ANALYSIS REPORT	Control Room Makeup Air Intake Structure East and West	
		Figure 3.8-31

See 101327

SEABROOK STATION UPDATED FINAL SAFETY ANALYSIS REPORT	Enclosure for Condensate Storage Tank	
		Figure 3.8-32

See 101635

SEABROOK STATION UPDATED FINAL SAFETY ANALYSIS REPORT	Pipe Tunnels (Typical)	
		Figure 3.8-33

See 101303

SEABROOK STATION UPDATED FINAL SAFETY ANALYSIS REPORT	Safety-Related Electrical Duct Banks - Typical Cross Section	
		Figure 3.8-34

See 101692

See 101528

SEABROOK STATION UPDATED FINAL SAFETY ANALYSIS REPORT	Typical Reinforcing Detail at Base Slab and Wall	
		Figure 3.8-36

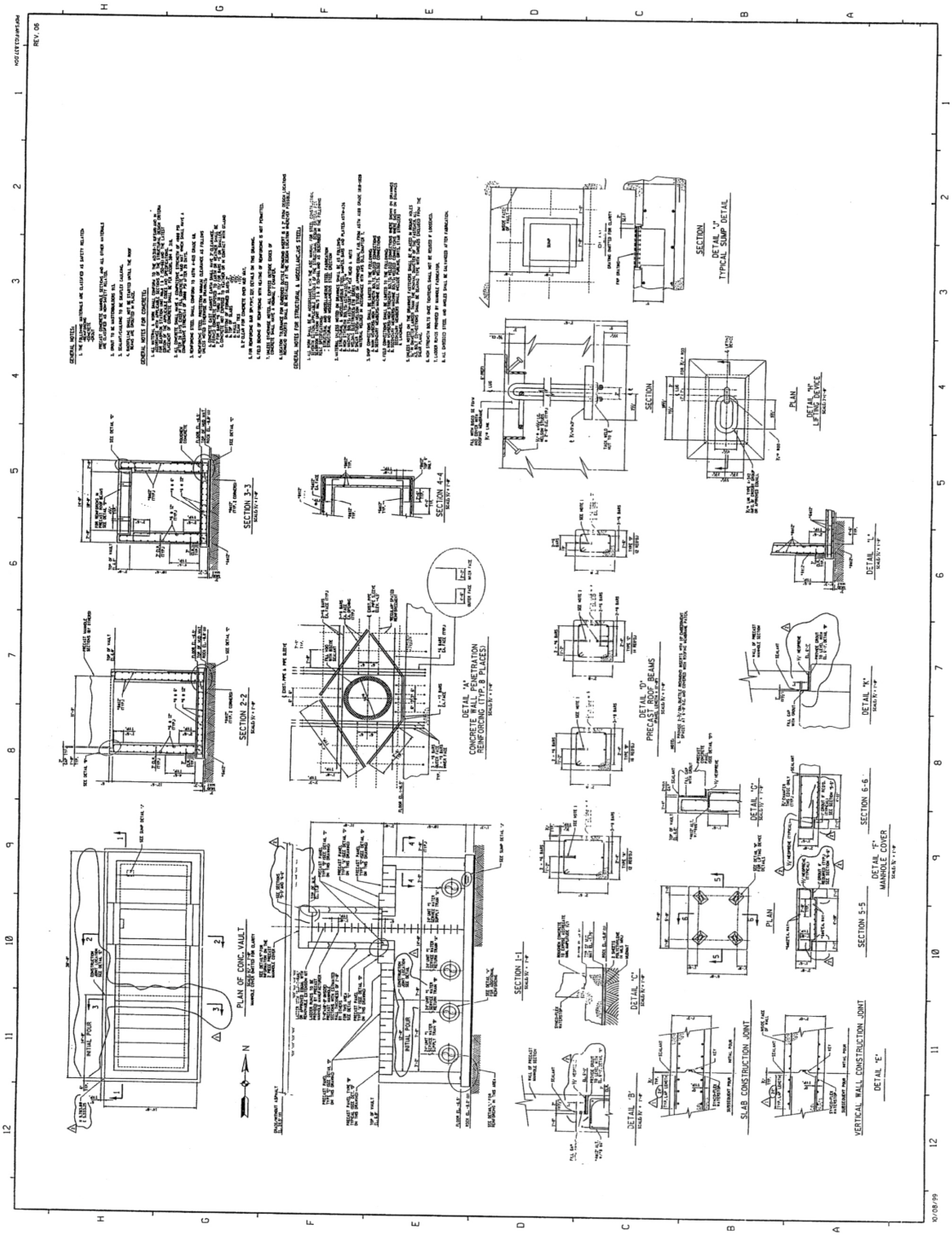

SEABROOK STATION UPDATED FINAL SAFETY ANALYSIS REPORT	Service Water Pipe Access Vault Concrete Plan & Sections Precast Roof Option	
		Figure 3.8-37

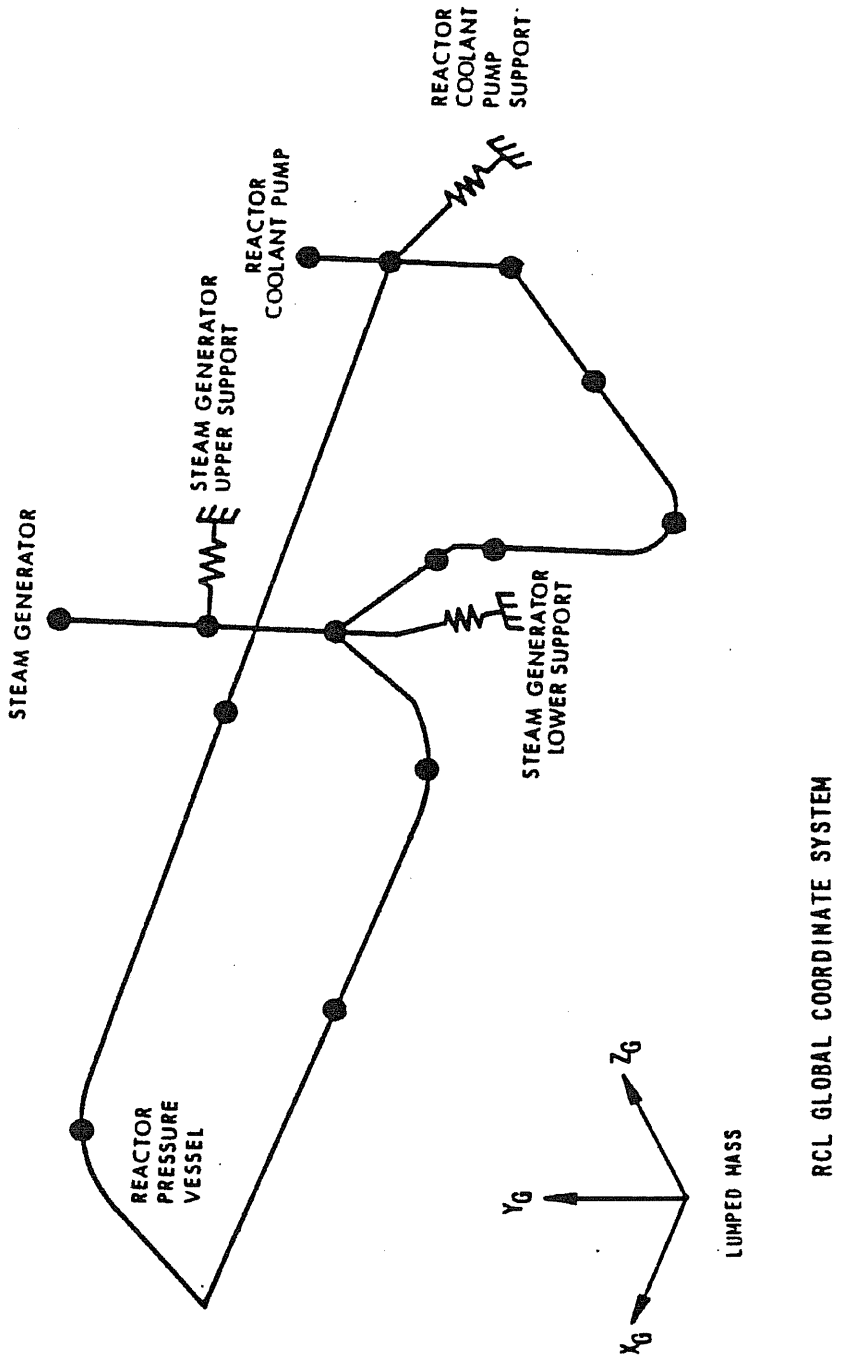

SEABROOK STATION UPDATED FINAL SAFETY ANALYSIS REPORT	Reactor Coolant Loop Support System, Dynamic Structural Model	
		Figure 3.9(N)-1

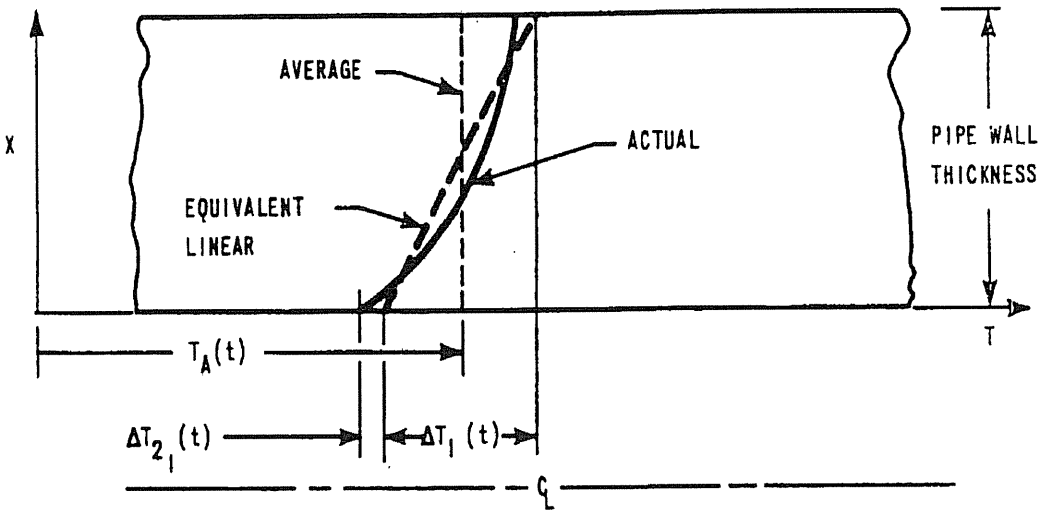

SEABROOK STATION UPDATED FINAL SAFETY ANALYSIS REPORT	Through-Wall Thermal Gradients	
		Figure 3.9(N)-2

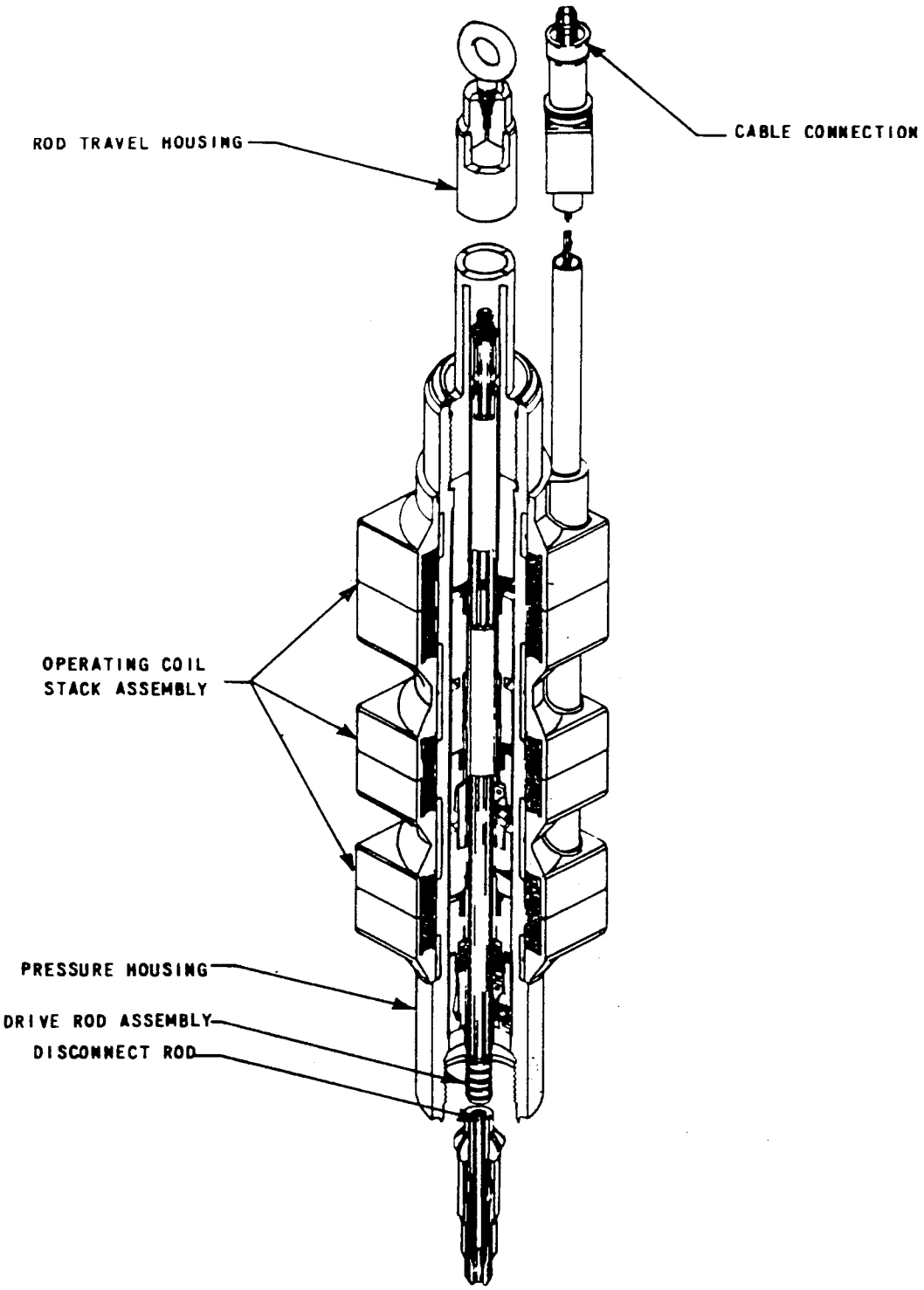

SEABROOK STATION UPDATED FINAL SAFETY ANALYSIS REPORT	Control Rod Drive Mechanism	
		Figure 3.9(N)-3

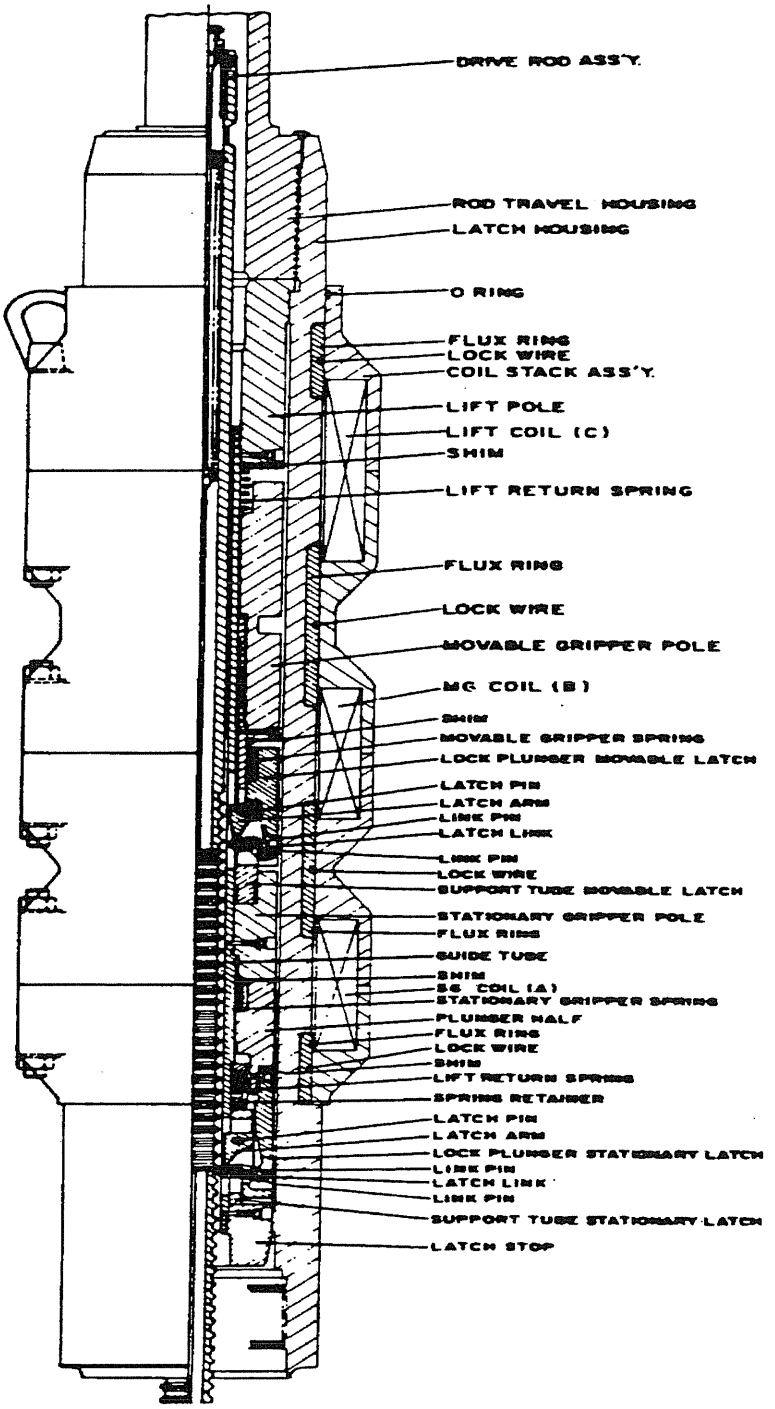

SEABROOK STATION UPDATED FINAL SAFETY ANALYSIS REPORT	Control Rod Drive Mechanism Schematic	
		Figure 3.9(N)-4

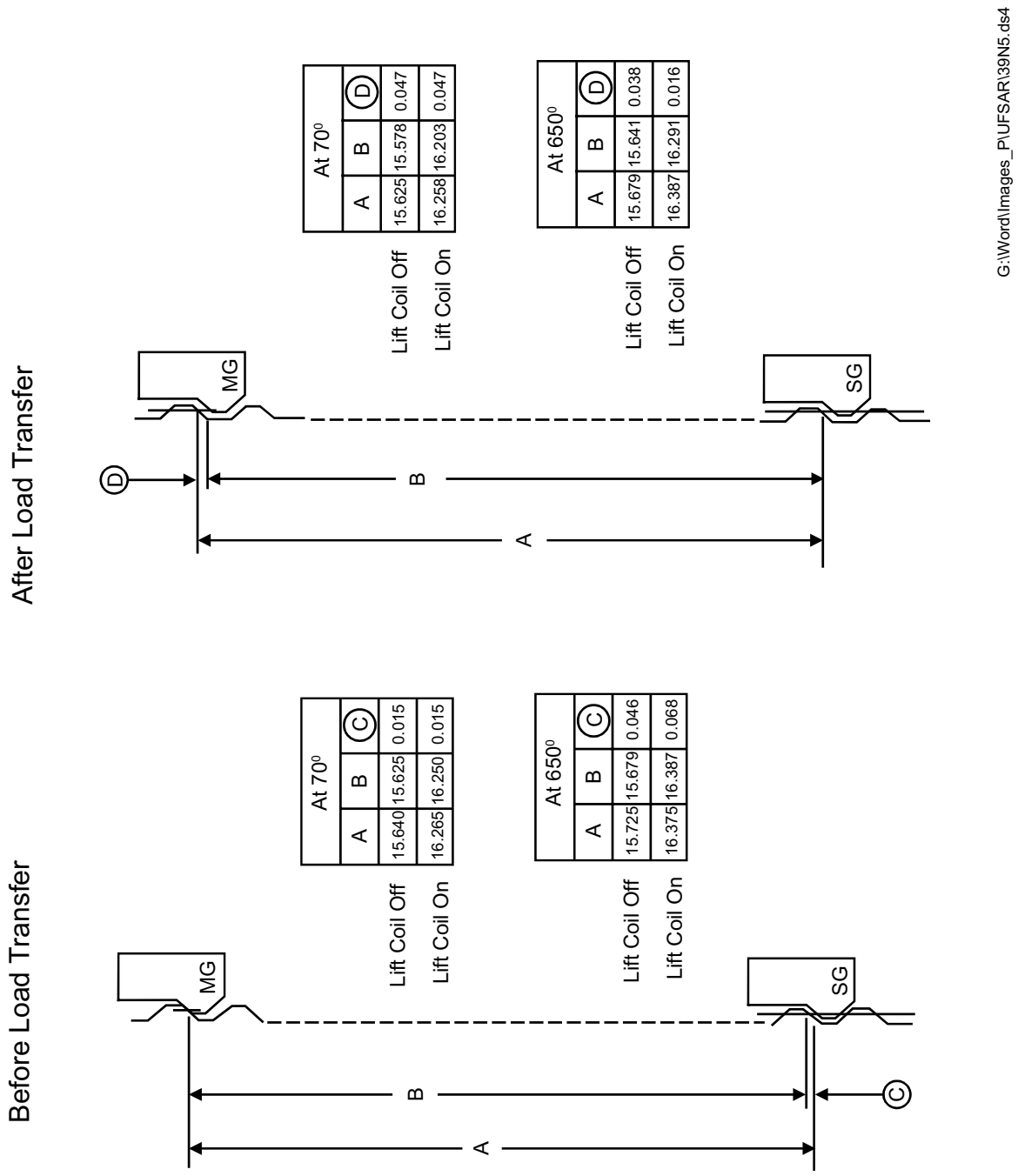

SEABROOK STATION UPDATED FINAL SAFETY ANALYSIS REPORT	Nominal Latch Clearance at Minimum and Maximum Temperature	
		Figure 3.9(N)-5

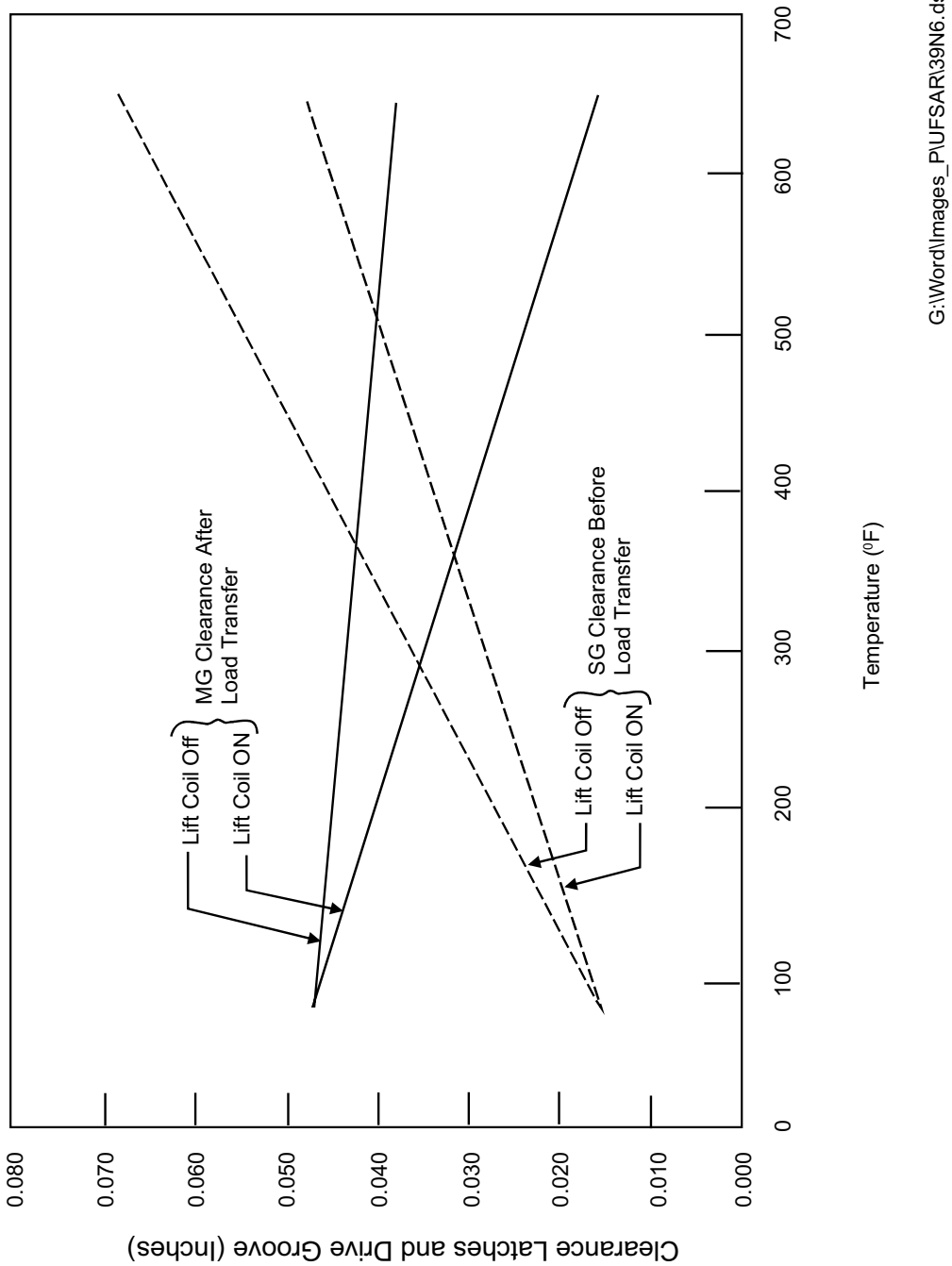

G:\Word\Images_P\UFSAR\39N6.ds4

SEABROOK STATION UPDATED FINAL SAFETY ANALYSIS REPORT	Control Rod Drive Mechanism Latch Clearance Thermal Effect	
		Figure 3.9(N)-6

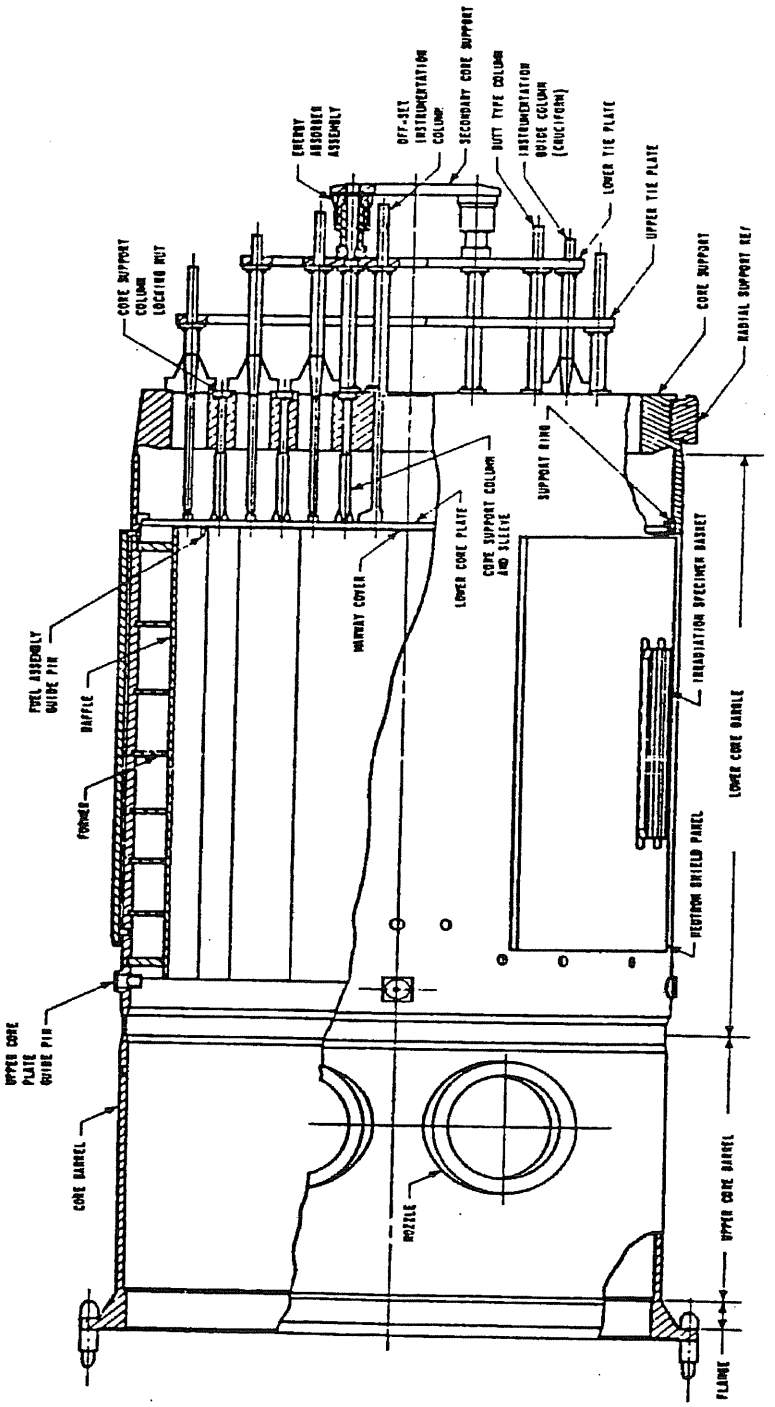

SEABROOK STATION UPDATED FINAL SAFETY ANALYSIS REPORT	Lower Core Support Assembly (Core Barrel Assembly)	
		Figure 3.9(N)-7

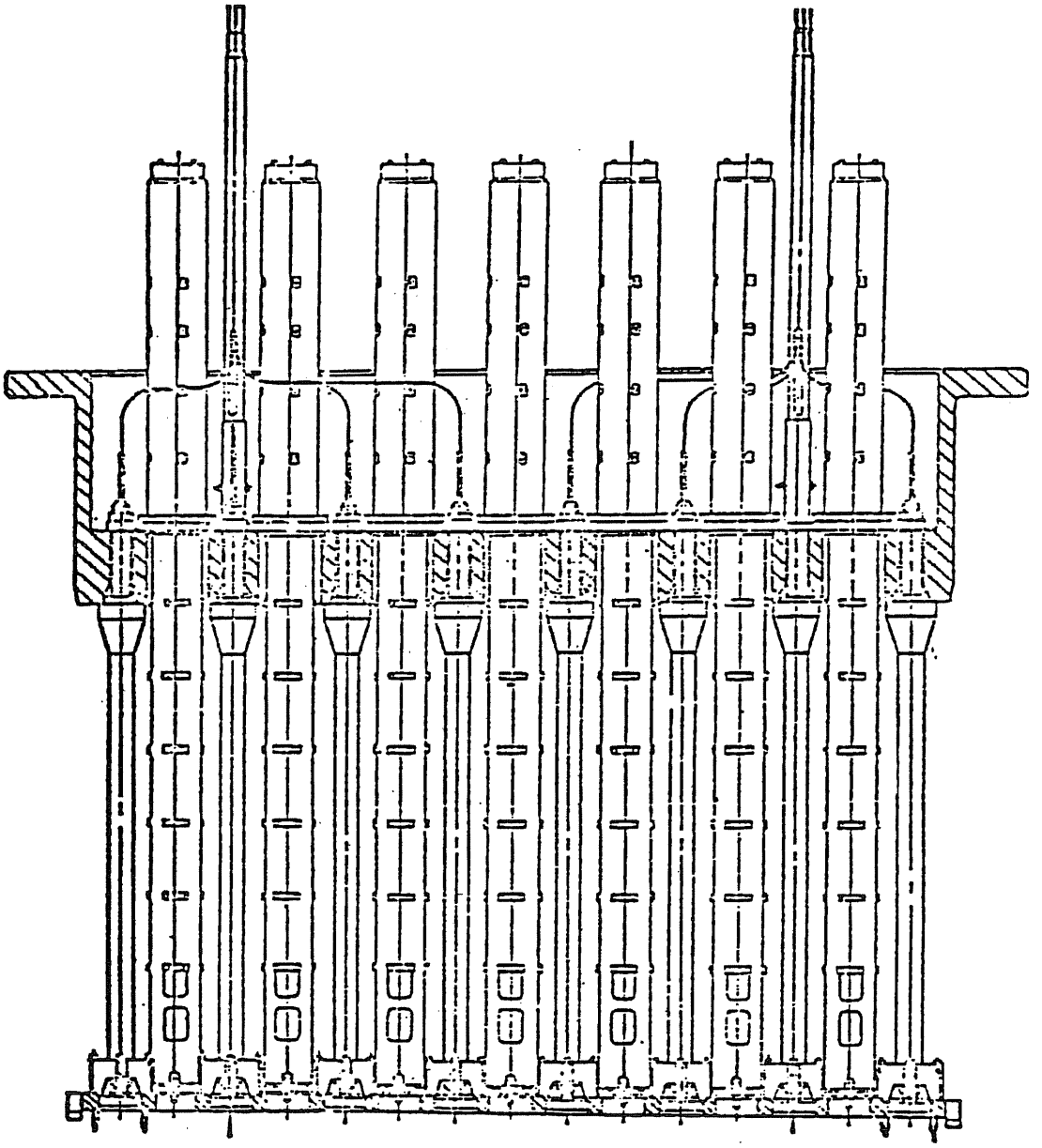

SEABROOK STATION UPDATED FINAL SAFETY ANALYSIS REPORT	Upper Core Support Structure	
		Figure 3.9(N)-8

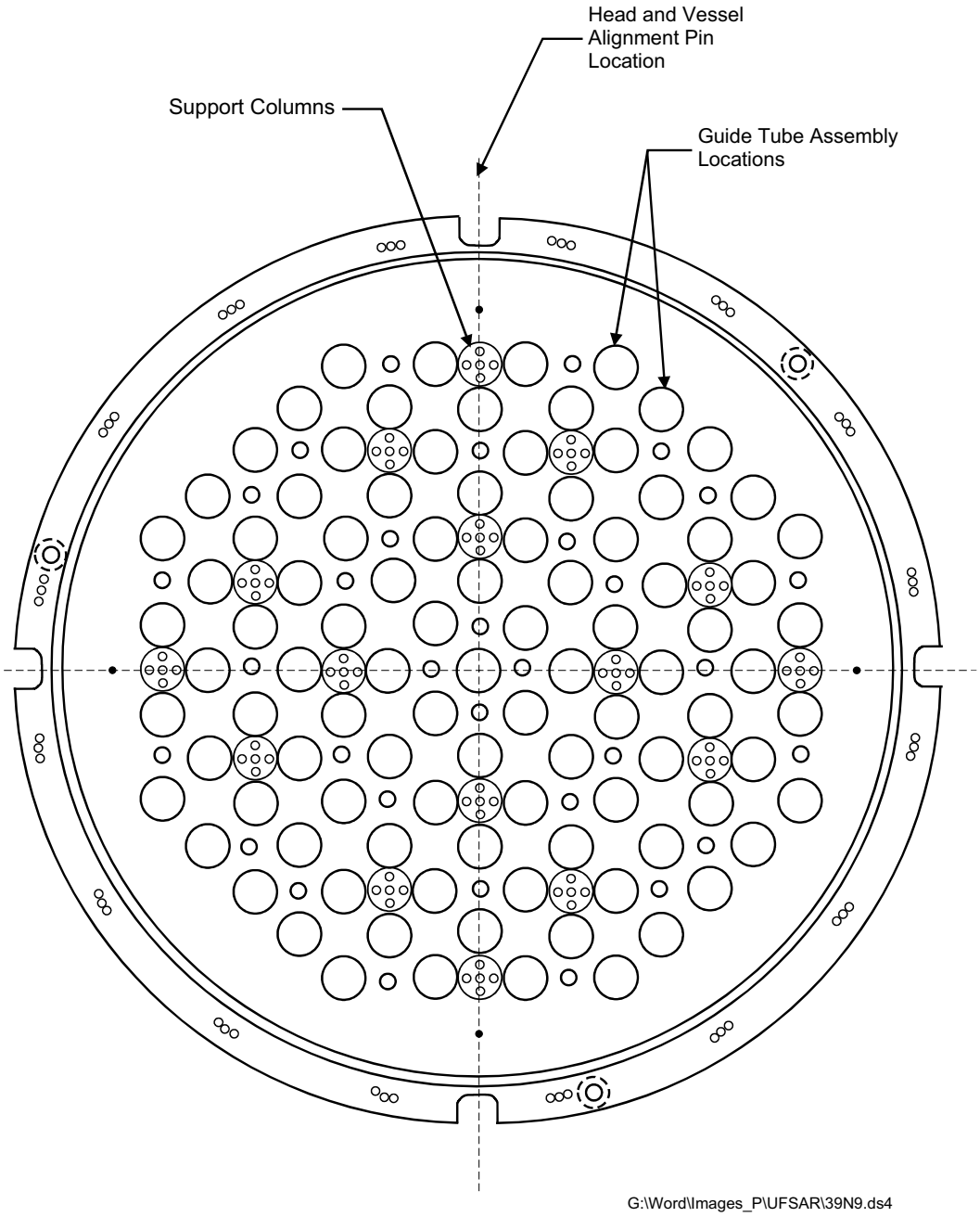

SEABROOK STATION UPDATED FINAL SAFETY ANALYSIS REPORT	Plan View of Upper Core Support Structure	
		Figure 3.9(N)-9

See 1-NHY-300219 sh 1 of 5

SEABROOK STATION UPDATED FINAL SAFETY ANALYSIS REPORT	Service Environment Chart [5 Sheets]	
		Figure 3.11-1 Sh. 1 of 5

See 1-NHY-300219 sh 2 of 5

See 1-NHY-300219 sh 3 of 5

See 1-NHY-300219 sh 4 of 5

See 1-NHY-300219 sh 5 of 5