DOCKET NO. 72-26

DIABLO CANYON

INDEPENDENT SPENT FUEL STORAGE INSTALLATION

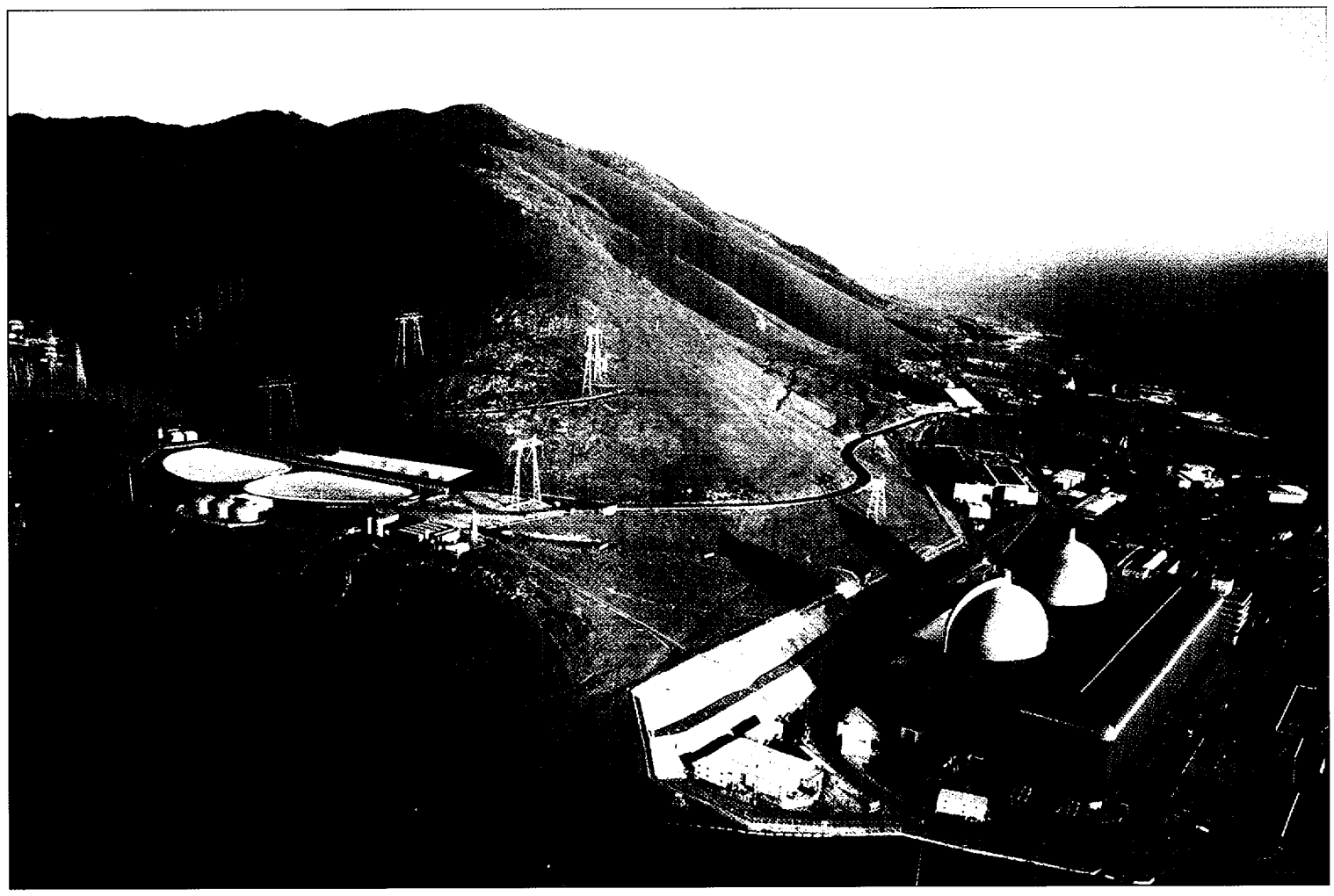

SAFETY ANALYSIS REPORT

PACIFIC GAS AND ELECTRIC COMPANY

CHAPTER 4

ISFSI DESIGN

CONTENTS

Section	Title	Page
4.1	LOCATION AND LAYOUT	4.1-1
4.1.1	References	4.1-2
4.2	STORAGE SYSTEM	4.2-1
4.2.1	Structures	4.2-1
4.2.2	Site Layout	4.2-6
4.2.3	Storage Cask Description	4.2-7
4.2.4	Instrumentation System Description	4.2-27
4.2.5	Compliance with General Design Criteria	4.2-27
4.2.6	References	4.2-27
4.3	TRANSPORT SYSTEM	4.3-1
4.3.1	Function	4.3-1
4.3.2	Components	4.3-1
4.3.3	Cask Transport Route	4.3-7
4.3.4	Design Bases and Safety Assurance	4.3-8
4.3.5	References	4.3-9
4.4	OPERATING SYSTEMS	4.4-1
4.4.1	Loading and Unloading System	4.4-1
4.4.2	Decontamination System	4.4-10
4.4.3	Storage Cask Repair and Maintenance	4.4-10
4.4.4	Utility Supplies and Systems	4.4-12
4.4.5	Cask Transfer Facility (CTF)	4.4-12
4.4.6	References	4.4-15
4.5	CLASSIFICATION OF STRUCTURES, SYSTEMS, AND COMPONENTS	4.5-1
4.5.1	Spent Fuel Storage Cask Components	4.5-2
4.5.2	Cask Storage Pads	4.5-3
4.5.3	Cask Transfer Facility	4.5-3
4.5.4	Cask Transport System	4.5-3
4.5.5	Ancillary Equipment	4.5-3
4.5.6	Design Criteria for SSCs Not Important to Safety	4.5-3
4.5.7	References	4.5-4

CHAPTER 4

ISFSI DESIGN

CONTENTS (Continued)

Section	Title	Page
4.6	DECOMMISSIONING PLAN	4.6-1
4.6.1	Preliminary Decommissioning Plan	4.6-1
4.6.2	Features That Facilitate Decontamination and Decommissioning	4.6-1
4.6.3	Cost of Decommissioning and Funding Method	4.6-1
4.6.4	Long-Term Land Use and Irreversible Commitment of Resources	4.6-2
4.6.5	Recordkeeping for Decommissioning	4.6-2
4.6.6	References	4.6-2

CHAPTER 4

ISFSI DESIGN

TABLES

Table	Title
4.2-1	Physical Characteristics of the HI-STORM MPC
4.2-2	Physical Characteristics of the HI-STORM 100SA Overpack
4.2-3	Physical Characteristics of the HI-TRAC 125D Transfer Cask
4.2-4	Summary of MPC-32 Cavity Pressures for Normal Conditions
4.2-5	Diablo Canyon ISFSI Compliance with General Design Criteria (10 CFR 72, Subpart F)
4.3-1	Important-to-Safety Components of the Cask Transportation System
4.5-1	Quality Assurance Classification of Major Structures, Systems, and Components

CHAPTER 4

ISFSI DESIGN

FIGURES

Figure	Title
4.1-1	Storage Layout
4.2-1	Typical Cask Storage Pad
4.2-2	Embedment Anchorage Structure
4.2-3	Typical Rock Anchor Detail
4.2-4	Cask Transfer Facility Support Structure (Schematic)
4.2-5	ISFSI Site Cross-Section View
4.2-6	Cask Anchor Stud and Sector Lug Arrangement
4.2-7	Generic HI-STORM 100SA System
4.2-8	HI-TRAC Transfer Cask
4.2-9	Transfer Cask Upper Bumper Attachment Modification
4.2-10	Transfer Cask Lower Bumper Attachment Modification
4.2-11	HI-STORM Mating Device
4.2-12	Cask Transport Frame
4.3-1	Cask Transporter With Transfer Cask in Horizontal Orientation
4.3-2	Conceptual Configuration of Cask Transporter With Transfer Cask in Vertical Orientation
4.3-3	Conceptual Configuration of Cask Transporter Carrying Generic HI-STORM 100SA Overpack with HI-STORM Lifting Brackets
4.3-4	Lift Links and Transport Frame with Transfer Cask Fully Downended

CHAPTER 4

ISFSI DESIGN

FIGURES (continued)

Figure	Title
4.3-5	Lift Links and Transport Frame with Transfer Cask Partially Upended
4.3-6	Lift Links and Transport Frame with Transfer Cask Fully Upended
4.4-1	Transfer Cask Impact Limiter
4.4-2	Cask Transport Frame Impact Limiter
4.4-3	Diablo Canyon HI-STORM Cask Transfer Facility
4.4-4	Loaded HI-TRACK Stacked on the HI-STORM in the Full Down Position in the CTF

CHAPTER 4

ISFSI DESIGN

This chapter provides descriptive design information for the ISFSI structures, systems, and components (SSCs). Emphasized are those design features that are important to safety, are covered by the quality assurance program, and are employed to withstand environmental and accident forces. The industrial codes used in the design of these SSCs are related to their design criteria and associated bases that are presented in Chapter 3.

4.1 LOCATION AND LAYOUT

The locations of the Diablo Canyon ISFSI storage site, cask transfer facility (CTF), and transport route from the DCPP fuel handling building/auxiliary building (FHB/AB) are shown in Figure 2.1-2. In addition, Figure 2.1-2 shows other facilities in the vicinity of the Diablo Canyon ISFSI storage site and the CTF, such as onsite roadways, buildings, water services, and transmission lines. None of these other facilities are related to the ISFSI. The Diablo Canyon ISFSI storage site, CTF, and the transport route are within the DCPP owner-controlled area. Travel distance from the FHB/AB via the transport route to the CTF and Diablo Canyon ISFSI storage site is approximately 1.2 miles. (See Section 4.3.3 for a discussion of the transport route.)

The storage casks are stored on concrete storage pads, which will be built as needed, within a protected area separate from that of DCPP. Each storage pad is designed to accommodate up to 20 storage casks in a 4-by-5 array as shown in Figure 4.1-1. Seven pads will be required to accommodate the fuel used during the duration of the plant's operating license period (up to 138 casks, plus 2 spare locations). Each loaded storage cask is approximately 11 ft in diameter, 20 ft high, and weighs about 360,000 lb. There is approximately 6 ft surface-to-surface distance between the casks. The seven storage pads will cover an area approximately 500 ft by 105 ft.

A security fence, with a locked gate, serves as the protected area boundary and circumscribes the storage pads. There is a minimum of 50 ft between the storage casks and the security fence on the north side of the storage pads, and a minimum of 40 ft between the storage casks and the security fence on the other three sides of the storage pads. There is a second fence around the protected area that is approximately 100 ft from the storage casks. This second fence forms the restricted area boundary and is located to ensure the dose rate at this boundary will be less than 10 CFR 20 requirements.

As shown in Figure 4.1-1, the CTF is located outside the restricted area fence at about 100 ft off the northwest corner of the storage pads. The CTF is a below-ground structure with a lift platform where a loaded multipurpose canister (MPC) is transferred between the HI-TRAC transfer cask and the HI-STORM 100SA overpack. In the full-up position, the overpack base

is approximately 40 inches below grade. At the full-down position, the overpack top surface is approximately 30 inches above grade.

The only utility associated with the Diablo Canyon ISFSI is electric power for the CTF lifting platform, lights and communications for both the CTF and storage area, and security equipment for the storage area. The source of this power is described in Section 4.4.4.

Loading and unloading of the MPCs takes place in the DCPP FHB/AB. These facilities are described in Chapter 9 of the DCPP Final Safety Analysis Report (FSAR) Update (Reference 1).

4.1.1 REFERENCES

1. Diablo Canyon Power Plant Units 1 & 2 Final Safety Analysis Report Update, Revision 14, November 2001.

4.2 STORAGE SYSTEM

Final construction design and analysis of the Diablo Canyon ISFSI storage pad and the CTF will be completed during the detailed design phase of the project. No significant changes are anticipated from the information presented.

4.2.1 STRUCTURES

Major important-to-safety ISFSI structures and their site locations are described in the following sections:

- Section 4.2.1.1 Cask Storage Pads
- Section 4.2.1.2 CTF
- Section 4.2.2 Site Layout
- Section 4.2.3 Storage Casks

See Figure 2.1-2 for the location of the Diablo Canyon ISFSI site in relation to the power block. See Figure 4.1-1 for the Diablo Canyon ISFSI site layout and the immediate surroundings.

4.2.1.1 Cask Storage Pads

The Diablo Canyon ISFSI storage site is designed to include seven cask storage pads in a row. Each pad will accommodate up to 20 HI-STORM 100SA storage casks. Figure 4.1-1 shows the layout of the pads with the surrounding security fence, restricted area fence, and approximate dimensions. Seven storage pads provide sufficient storage space for DCPP spent fuel through plant decommissioning. The seismic design criteria for the cask storage pads are described in Section 3.2.3 and 3.3.2. Pad embedment design criteria are integrated with the storage cask pad design criteria, which is the primary focus of discussion in Section 3.3.2. A further discussion of the design criteria, analyses, and resulting design of the cask storage pads is provided here.

4.2.1.1.1 Function

The function of the cask storage pads is to provide a level, competent structural surface for placement of the loaded overpacks for all design-basis conditions of storage. The storage casks (overpacks) are to be anchored to the pad by 16, 2-inch diameter, SA 193 Gr. B7 studs.

4.2.1.1.2 Design Specifications

The cask storage pad design is based on a maximum, loaded-overpack weight of 360,000 lb each. This maximum weight bounds the maximum loaded weight of the overpacks proposed for use at the Diablo Canyon ISFSI. Each HI-STORM 100SA overpack proposed for use at the Diablo Canyon ISFSI can contain one of the following pressurized water reactor (PWR) fuel canisters: MPC-24, MPC-24E, MPC-24EF, or MPC-32, with maximum weights given in Table 4.2-1 of this SAR and shown in Table 3.2-1 of the HI-STORM 100 System FSAR (Reference 1), as amended by Holtec LAR 1014-1 (Reference 2). See Section 3.3.2 for more details on the storage pad design criteria.

4.2.1.1.3 Plans and Sections

The site plan, which shows the locations of the concrete storage pads in relation to the power plant facility, is shown in Figure 2.1-2. A cross section of a typical concrete storage pad plan is shown in schematic Figure 4.2-1.

4.2.1.1.4 Components

- **Embedment Steel Assembly**: This assembly consists of structural steel plates and rods. The function of this assembly is to properly distribute the loads imposed on the surface (by the storage casks) to the entire structure (Figure 4.2-2).

- **Reinforced Concrete**: The steel-reinforced concrete is designed for a mix with a compressive strength of 5,000 psi at 90 days. The reinforcing steel bars will have minimum 60,000-psi yield strength.

4.2.1.1.5 Design Bases and Safety Assurance

The cask storage pads are classified as important to safety in order to provide the appropriate level of quality assurance in the design and construction. This classification is consistent with the recommendation made in Section 2.0.4 of the HI-STORM 100 System FSAR, as amended by Holtec LAR 1014-1, for deployment of the anchored HI-STORM 100SA overpack at a high-seismic site. This ensures that the cask storage pads will perform their intended functions.

4.2.1.1.6 Storage Pad Design

The cask storage pads (total of seven) are structural units constructed of steel-reinforced concrete. Each concrete pad is approximately 68 ft wide by 105 ft long and 7.5 ft thick with longitudinal and transverse horizontal reinforcing bars near the top and bottom of the pads. The concrete compressive strength will be 5,000 psi at 90 days. The reinforcement bars will have minimum yield strength of 60,000 psi. Each pad accommodates a center-to-center spacing of 17 ft for the overpacks. Each of the cask storage pads accommodates up to

20 loaded overpacks (4 rows of 5). The sides of each storage pad are designed with an additional apron to provide maneuvering room for the cask transporter before it is driven onto the pad. The pads are nearly flush with grade to allow direct access by the cask transporter. The casks will be installed on the pads in a prescribed loading sequence to assure pad stability for all design-basis accidents and to maintain design qualifications. The loading sequence will be proceduralized.

The cask storage pad is designed with an embedded steel structure having a steel plate ring (Figure 4.2-1) at the surface of the concrete that mates with the bottom of the cask. Each cask is compressed against the embedment plate using 16 studs. Each stud is preloaded to approximately 157,000 lbf. The preload is achieved by threading the SA193-B7 studs into a coupling steel block located on the underside of the embedment plate, buried in the concrete. The seismic tensile/bending loads imposed on the pad will then be resisted by the long A-36 steel rods connected to the bottom base plate (Figure 4.2-2). The base plates are designed to provide sufficient bearing area onto the concrete so as to be able to transfer loads by bearing. Shear loads from each cask will be carried through the embedment plate/coupling blocks into the concrete.

4.2.1.1.7 Storage Pad and Anchorage Analysis

The pad structural seismic analysis is performed by developing a finite-element model, using the ANSYS FEA Program (Reference 3) of a representative pad, which includes the casks and the supporting rock, to determine the potential for pad uplift and to calculate the stress fields in the concrete. The results of this static analysis are used in the design of the reinforcements to ensure that the bending moments are adequately carried by the pad, and that the stress limits of ACI 349-97 are satisfied. The specific pullout provisions of Appendix B are not applicable to anchorage and base plates of the proposed size. The anchorage is designed to meet the ductile-anchorage provisions of the October 1, 2000, Proposed Draft Appendix B to ACI 349-97. The methodology used assumes this loading imposed on the pad embedment structures is similar to an inverted column. Specifically, the design-strength capacity of the embedded base plate, concrete bearing, and diagonal tension-shear capacity computed in accordance with the design provisions of ACI 349-97 all exceed the required ductile design strength of the embedded anchor stud. Furthermore, the ultimate tensile strength of the reduced section at the thread root of the anchor bar is approximately 125 percent of the yield strength of the unreduced gross section of the anchor bar. Anchor bars are made of A36 steel, which has a well-defined yield plateau. Thus, if any overload occurs, the anchor bars will yield before any less ductile failure could occur. Lastly, the yield strength of the embedded anchor studs is more than 250 percent of the computed demand load on these bars to provide substantial margin against yielding.

The pad was evaluated for sliding. Section 8.2.1.2.3.2 describes the dynamic non-linear time history analysis that was performed to evaluate pad sliding. Overturning is not considered as a credible failure, considering the overall geometry of the structure.

4.2.1.1.7.1 Pad Static Analysis

A solid finite element model of the pad was developed (using the ANSYS FEA Program) to statically analyze the pad for loads imposed by the casks, as well as the pad-inertia loads, due to ZPA excitation from postulated bounding ground motions (Section 8.2.1.2.3.2). The static loading cases were performed for a range of ground/rock moduli of elasticity to account for variations in the rock properties. The earthquake loadings bound the other accidental loading conditions (for example, explosion and tower collapse) and natural phenomena accident conditions (for example, tornado and wind).

4.2.1.1.7.2 Cask Dynamic Analyses

The storage cask is analyzed by a nonlinear, time history analysis for bounding ground motions. The resulting anchorage loading at the concrete/embedment interface is used for the detailed analysis of the pad and the embedment steel (see Section 4.2.1.1.7.1 for a discussion of the pad static analysis). The cask dynamic analysis is explained further in Section 8.2.1.2.3.1.

4.2.1.1.8 Storage Pad Settlement

No pad settlement is anticipated as a result of the facility placement on the rock site (See Section 2.6.4.4 for more discussion).

4.2.1.1.9 Slope Stabilization Measures

The following sections discuss slope stabilization and rock fall mitigation measures being taken to ensure the storage casks are not adversely affected by debris flow and rock falls.

4.2.1.1.9.1 Cut Slope, Stabilization Design

As discussed in Sections 2.6.5.2.1 and 2.6.5.2.2, rock blocks exposed after cut-slope excavation have the potential to fall into the excavation under both static and seismic loading conditions. After excavation, cut-slope faces will be protected from weathering and minor raveling by a wire-mesh-reinforced shotcrete facing to stabilize the cut slope and prevent or minimize potential failures from occurring. To stabilize larger rock blocks, potentially prone to failure during seismic loading, rock anchors will be installed in approximately 2- to 3-inch diameter holes on approximately 5-ft centers and drilled subhorizontally approximately 30 ft deep from the cut-slope faces (Figure 4.2-3). Square concrete pads with steel top plates will be formed and cast over the holes to distribute anchor loads to the rock surface. High-strength, corrosion-protected bar anchors will be inserted into the holes, grouted and stressed. Each bar will be installed and proof-tested as recommended by the Prestressed Tensioning Institute (PTI). Additional holes, one approximately every fifth anchor, will be drilled between anchor holes and lined with PVC drainpipe to ensure the slope remains free for

draining. The actual pattern will be adjusted during construction, based on the conditions found.

4.2.1.1.9.2 Mitigation of Potential Displacements along Clay Beds

As discussed in Section 2.6.5.1.3, potential rock mass displacements along clay beds due to seismic ground motions are calculated to range from 1 to 3 ft on the clay beds located on the natural slope above the ISFSI site, and 1 ft to 2 ft on the clay beds inferred to daylight in the cut slope or pass just below the ISFSI site. The effects of these potential displacements will be mitigated, as described below.

Rocks dislodged by displacements along any of the several clay beds on the natural slope above the ISFSI site will be prevented from reaching the ISFSI site by a rockfall barrier constructed at the top of the ISFSI cut slope. This barrier will be designed to absorb and dissipate the kinetic energy of the rockfall and will be constructed of articulated steel posts, bundled wire ring steel nets, friction brake elements, anchoring and retaining ropes, and rock anchors.

Rocks offset by displacements along clay beds daylighting in the cut slope will be prevented from dislodging from the cut slope face by the wire-mesh-reinforced shotcrete facing and rock anchor system described in Section 4.2.1.1.9. The orientation of clay beds in the region of the cut slope is approximately parallel to the preferred rock anchor orientation, thereby minimizing the potential for damage to the anchors as a result of displacements along the clay beds. In the unlikely event that rock blocks are completely dislodged from the cut-slope face during a seismic event, the midslope bench width and offset distance from the slope base to the ISFSI pads are sufficient to accommodate the largest rock blocks as defined in Section 2.6.5.2.2.

In the event displacements occur along clay beds inferred to pass beneath the site, it is expected that any displacements propagating upward will do so through the weaker rock surrounding the massive, heavily reinforced concrete pads, and not impose significant additional loads or displacements on the pads themselves.

4.2.1.2 CTF Support Structure

The CTF concrete support structure is a cylindrical, steel-lined structure, embedded in the rock, underground; made-up of steel-reinforced slabs and walls (Figure 4.2-4). This concrete structure houses the CTF steel shell structure consisting of lift platform and associated mechanical equipment. The facility is designed with a sump for incidental water collection. An associated standpipe will accommodate a temporary, drop-in sump pump for water removal. When not in use, the facility will be enclosed with a cover for personnel safety and protection of the structure from the environment. The transporter tie down locations immediately adjacent to the CTF support structure is shown on Figure 4.2-4. The tie downs

will be supported by rock anchor installations into the ground. Holtec Drawing 3770, showing the CTF shell structure, is provided in Figure 4.4-3.

4.2.1.2.1 Function

The function of the CTF support structure is to provide a flat, concrete pad at the bottom of the facility to accommodate installation of the CTF steel shell and lift platform, and to provide a rigid, concrete pad on the surface for the cask transporter. The CTF lifting platform function is to raise and lower the overpack for MPC transfer operations.

4.2.1.2.2 Design Specifications

The structure will have provisions for a sump and sump pump to allow for removal of incidental rainwater. The CTF and its supporting structure will be qualified to withstand the design earthquake (DE), double-design earthquake (DDE), Hosgri earthquake (HE), and LTSP earthquakes without an uncontrolled lowering of the lifted load (Section 3.3.4). The earthquake loading bounds the other accidental loading conditions (for example, tower collapse) and natural phenomena accident conditions (for example, tornado and wind). See Section 3.3.4 for a discussion of the CTF design criteria.

4.2.1.2.3 Static Analysis

The reinforced concrete was designed and evaluated for a transporter on top of the facility and the overpack in the CTF during the MPC transfer operation. The structure is designed for appropriate vertical and lateral loads imposed during the DE, DDE, HE and LTSP earthquakes. The concrete and the reinforcing steel have been designed in accordance with the requirements set forth in ACI 349-97 (Reference 4). A static, seismic analysis was performed on the CTF shell and lifting platform (Section 8.2.1).

4.2.1.2.4 CTF Structure Layout

The structure is located on the ISFSI site approximately 100 ft from the concrete storage pads (Figure 4.1-1).

4.2.2 SITE LAYOUT

A plan view of the ISFSI storage site layout is shown in Figure 4.1-1. This figure shows the functional features of the storage site, including the locations of the CTF, the security and restricted area fences, and the access road that leads up from the DCPP. A section view of the ISFSI storage site is shown in Figure 4.2-5. This figure provides separation distances from the pad to nearby features, including the cut-slope hillside to the south and east of the pad.

As shown in Figures 4.1-1 and 4.2-5, a removable fence is located between the security fence and the raw water reservoirs. This fence provides protection against false security alarms due

to authorized personnel, who are working in the raw-water-reservoir area, inadvertently stepping into an alarmed zone. If work activities in the raw-water-reservoir area required the fence to be temporarily removed, it can be with the appropriate, accompanying security compensating measures.

4.2.3 STORAGE CASK DESCRIPTION

The HI-STORM 100 System is used to store spent fuel and associated nonfuel hardware in a dry configuration at the Diablo Canyon ISFSI storage site. At Diablo Canyon, a shortened and anchored version of the standard HI STORM 100 System overpack will be used. This system is referred to as the HI-STORM 100SA. The free-standing version of the HI-STORM 100 System has been certified by the NRC for general use at applicable onsite ISFSIs operated by a 10 CFR 50 license holder. An anchored version of the HI-STORM 100 System (HI-STORM 100A and SA) is proposed as part of Holtec LAR 1014-1. Holtec Drawing 3769, showing the HI-STORM 100SA overpack-to-ISFSI pad (anchor stud/sector lug) arrangement is provided in Figure 4.2-6.

4.2.3.1 Function

As discussed in Section 3.2, the HI-STORM 100 System is designed to store spent nuclear fuel and associated nonfuel hardware from DCPP under Diablo Canyon ISFSI site-specific normal, off-normal, and accident conditions of service, including the most severe design-basis natural phenomena in accordance with 10 CFR 72 (Reference 5). The HI-STORM 100 System design is summarized in Chapter 1 of this SAR and described in more detail in Chapters 1 and 2 of the HI-STORM 100 System FSAR, as amended by LAR 1014-1.

The HI-STORM 100 System is designed to permit testing, inspection, and maintenance of the systems. The acceptance test and maintenance programs of the HI-STORM 100 System are specified in Chapter 9 of the HI-STORM 100 System FSAR. Because of the passive nature of the HI-STORM 100 System, onsite inspection and maintenance requirements are minimal. Surveillance requirements associated with operational control and limits are described in Chapter 10. Inspection and testing of important-to-safety components are performed in accordance with the Holtec International or PG&E Quality Assurance Program, as applicable.

Each of the HI-STORM 100 System components is described in further detail in the following sections. Figures, or reference to figures, in the HI-STORM 100 System FSAR are provided to illustrate the components and their functions.

4.2.3.2 Description

In its final storage configuration, the HI-STORM 100 System consists of the following major components considered important to safety:

- Holtec multi-purpose canister

- Holtec damaged fuel container (DFC)
- HI-STORM 100SA overpack

Figure 4.2-7 (exploded isometric view) shows the components of the HI-STORM 100 System in its storage configuration with the HI-STORM 100SA overpack. The following sections provide a summary of the HI-STORM 100 System MPC, DFC, and overpack design bases and design relative to the storage requirements of the Diablo Canyon ISFSI. The Diablo Canyon onsite transporter is described in Section 4.3. Detailed operating guidance for MPC loading, onsite transport, and transfer of the MPC from the transfer cask to the HI-STORM overpack is provided in Sections 5.1 and 10.2 of this SAR. Design drawings for generic HI-STORM 100 System components, except the DFC, are contained in Section 1.5 of the HI-STORM 100 System FSAR, as amended by LAR 1014-1. A figure depicting the DFC is contained in Section 2.1 of the HI-STORM 100 System FSAR, as amended by Holtec LAR 1014-1.

The HI-TRAC 125 transfer cask is used to provide the necessary structural support, shielding, heat removal, and missile protection as well as the means to transfer the loaded MPC between the transfer cask and the HI-STORM 100SA overpack. The transfer cask is not used in the final storage configuration of the HI-STORM 100 System at the storage pads. Design drawings for a standard transfer cask are provided in Section 1.5 of the HI-STORM 100 System FSAR.

4.2.3.2.1 MPC

The MPC provides for confinement of radioactive materials, criticality control, and the means to dissipate decay heat from the stored fuel. It has the structural capability to withstand the loads created by all design basis accidents and natural phenomena. The MPC is a totally welded structure of cylindrical profile with flat ends. It consists of a honeycomb fuel basket, baseplate, MPC shell, MPC lid, vent and drain port cover plates, and closure ring. The MPCs, with different internal arrangements, can accommodate intact spent fuel, damaged fuel, fuel debris, and nonfuel core components, as discussed in Sections 3.1.1 and 10.2. The MPC lid provides top shielding and provisions for lifting the loaded MPC during transfer operations between the transfer cask and the overpack. The MPC fuel-basket assembly provides support for the fuel assemblies as well as the geometry and fixed neutron absorbers for criticality control. The MPC is constructed entirely from stainless steel, except for the neutron absorber (Boral, an aluminum alloy and boron carbide composite), and an aluminum washer in the vent and drain ports. A summary of the nominal physical characteristics of the MPC is provided in Table 4.2-1.

4.2.3.2.2 DFC

The DFC is used to contain fuel assemblies classified as damaged fuel or fuel debris in the as required by the Diablo Canyon ISFSI TS and SAR Section 10.2. Damaged fuel may be stored in both the MPC-24E and the MPC-24EF, however, storage of fuel debris is only allowed in the MPC-24EF. Storage of damaged fuel or fuel debris is not permitted in the MPC-24 or the MPC-32. The DFC is a long, square, stainless-steel container with screened openings at the top and bottom. Each DFC is inserted into a designated storage cell within the MPC. The function of each DFC is to retain the damaged fuel or fuel debris in its storage cell and provide the means for ready retrievability. The DFC permits gaseous and liquid media to escape into the interior of the MPC, but minimizes dispersal of gross particulates during all design basis conditions of storage, including accident conditions. The total quantity of fuel debris permitted in a single DFC is limited to the equivalent weight and special nuclear material quantity of one intact fuel assembly. Proposed HI-STORM 100 System FSAR Figure 2.1.2B in Holtec LAR 1014-1 shows the general arrangement of the MPC-24E/EF DFC.

The lifting device at the top of the DFC is designed to meet the requirements of ANSI N14.6 (Reference 6) in accordance with applicable guidelines of NUREG-0612 (Reference 7). As discussed in the Holtec LAR 1014-1, Appendix 3.AS, the DFC is designed to meet ASME Section III, Subsection NG (Reference 8) allowables for normal handling and ASME Section III, Appendix F allowables for loadings experienced during a postulated, cask-drop accident.

4.2.3.2.3 HI-STORM 100SA Overpack

The HI-STORM overpack is a rugged, heavy-walled, cylindrical, steel and concrete structure. The structure is made of inner and outer concentric carbon-steel shells, a baseplate, and a bolted lid (comprised of steel top plates and a concrete shield). The spacing of the carbon-steel inner and outer shells provides approximately 30 inches of annular space that is filled with unreinforced concrete for radiation shielding. The overpack is designed to permit natural circulation of air around and up the exterior shell of the MPC, via the chimney effect, to provide for the passive cooling of the spent fuel contained in the MPC. The cask has 4 air inlet ducts located at 90-degree spacing in the base of the cask and 4 air outlet ducts located in the top lid of the overpack. The cooling air enters the inlet ducts, absorbs heat from the MPC surface, and flows upward in the annulus between the MPC and exits at the outlet ducts.

A summary of the nominal physical characteristics of the overpack is provided in Table 4.2-2.

4.2.3.2.4 HI-TRAC 125 Transfer Cask

The transfer cask is used to facilitate transport of the loaded MPC from the FHB/AB to the CTF and transfer of the loaded MPC into the overpack for storage at the ISFSI storage pad. It provides the necessary structural, shielding, and heat removal design features to protect the spent fuel and personnel during fuel loading, MPC preparation, and MPC transfer operations. The transfer cask is a rugged, heavy-walled, cylindrical steel vessel comprised of inner and

outer concentric shells, a bolted pool lid, a top lid, and an outer circumferential water jacket. The annulus between the inner and outer steel shells is filled with lead. As needed, the water jacket is filled with water for shielding after the loaded transfer cask is removed from the spent fuel pool (SFP) and placed in the cask washdown area, but before the MPC interior is drained of borated water. The lead and the water in the jacket provide gamma and neutron shielding for personnel working on or near the loaded MPC to ensure occupational exposures are as low as is reasonably achievable (ALARA) during operations. The transfer cask is designed for transient use, to contain the MPC, and to be submerged in the SFP to support fuel loading. It includes lifting trunnions to allow the loaded transfer cask and MPC to be placed into and removed from the SFP for decontamination and preparation of the MPC for storage. The maximum design weight of the transfer cask is 125 tons, including a fully loaded MPC-32 with water in the MPC cavity and no water in the water jacket. Additional physical characteristics of the transfer cask are provided in Table 4.2-3. Figure 4.2-8 (isometric view) shows the HI-TRAC transfer cask and Figure 4.2-7 shows an isometric view of the HI-STORM 100 SA System. A more detailed description, design drawings, and a summary of the design criteria for the transfer cask are provided in Sections 1.2.1.2.2, 1.5, and 2.0.3, respectively, of the HI-STORM 100 System FSAR.

An optional design of the HI TRAC 125 transfer cask is being used at the Diablo Canyon ISFSI. This optional design, known as the HI-TRAC 125D, was developed by Holtec International and will be implemented under the provision of 10 CFR 72.48 for generic use with the HI-STORM 100 System after Amendment 1 to the HI-STORM CoC is approved. Holtec proprietary Drawing 3438 (see Section 1.1) is being provided to the NRC under separate cover (see Reference 9). A non-proprietary drawing will be included in Revision 1 to the HI-STORM 100 System FSAR The key differences between the generic HI-TRAC 125D and the generic HI-TRAC 125 design described above are as follows:

(1) The lower pocket trunnions have been removed as they are not needed to accommodate the Diablo Canyon ISFSI lifting and handling operations.

(2) Four attachment points with appropriate reinforcing steel have been added to the top of the transfer cask shell to allow for the use of temporary bumpers described below.

The generic HI-TRAC 125D design will be slightly modified for the site-specific use at the Diablo Canyon ISFSI. This modification adds attachment points at the top (Figure 4.2-9) and bottom (Figure 4.2-10) of the transfer cask for the attachment of temporary bumpers used while handling the transfer cask in the DCPP FHB/AB. These bumpers are not used outside the DCPP FHB/AB. See Chapter 5 for more detailed discussion of the bumpers and attachment points.

(3) The transfer lid has been replaced by a HI-STORM mating device (see Figure 4.2-11). This device eliminates replacing the pool lid with a transfer lid while in the FHB/AB, thus reducing personnel dose. This design allows for the removal of the pool lid to facilitate MPC transfer at the CTF. The shielding previously provided by the transfer

lid when the transfer cask is in the horizontal orientation is provided by a removable bottom shield that is integral to the cask transport frame (see Figure 4.2-12).

(4) The bottom baseplate diameter has been increased and an additional bolt circle added with 16 holes to accommodate the HI-TRAC bottom shield, the HI-STORM mating device, and an optional impact limiter. Gussets have been added to the baseplate to provide additional strength.

(5) The water jacket design has been changed from channel-and-plate design to a rib-and-shell design to better facilitate fabrication and reduce the number of welded joints.

(6) The pool lid and drain line have been slightly modified to improve the quality of the bolted joint and improve the operability of the drain.

4.2.3.3 Design Bases and Safety Assurance

The governing codes used for the design and construction of the HI-STORM 100 System steel components are listed in HI-STORM 100 System FSAR, Table 2.2.6, and are summarized below. Clarifications on the applicability of ACI 349-85 (Reference 10) to the unreinforced concrete used in the HI-STORM 100 overpack are provided in Appendix 1.D to the HI-STORM 100 System FSAR, as amended by LAR 1014-1.

- MPC

Pressure boundary	ASME Code Section III, Subsection NB and Code Case N-595-1
Fuel Basket	ASME Code Section III, Subsection NG

- DFC

Lifting Bolts	ANSI N14.6 per applicable guidelines of NUREG-0612, Section 5.1.6
Steel Structure	ASME Code Section III, Subsection NG

- Overpack

Steel	ASME Code Section III, Subsection NF with Holtec exceptions NF-3256 and NF-4441
Unreinforced Concrete	ACI-349-85

- Transfer Cask

Steel Structure	ASME Code Section III, Subsection NF
Lifting Trunnion Blocks	ASME Code Section III, Subsection NF and ANSI N14.6 per applicable guidelines of NUREG-0612, Section 5.1.6
Lifting Trunnions	ANSI N14.6 per applicable guidelines of NUREG-0612, Section 5.1.6

The safety classification of the components comprising the HI-STORM 100 System were determined using NUREG/CR-6407 (Reference 11) as a guide. Section 4.5 provides the safety classification of the HI-STORM 100 System components and additional detail on safety classification of components used at the Diablo Canyon ISFSI.

4.2.3.3.1 System Layout

In its storage configuration, the HI-STORM 100 System consists of a fully-welded MPC placed inside of a vertical concrete overpack. Each MPC holds either 24 or 32 PWR spent fuel assemblies in an internal basket, depending on the particular MPC model. The specifics of the material approved for storage in the HI-STORM 100 System at the Diablo Canyon ISFSI storage site are discussed in Sections 3.1.1 and 10.2 and the Diablo Canyon ISFSI TS.

The HI-STORM 100 System is illustrated in Figure 4.2-7. Cross-sections of the PWR MPC baskets and an outline of the DFC are shown in the figures contained in Sections 1.2 and 2.1, respectively, of the HI-STORM 100 System FSAR, as amended by LAR 1014-1.

The transfer cask is designed for repetitive, transient use to contain one MPC during fuel loading, MPC preparation for storage, and transfer of the sealed MPC to the CTF. The transfer cask provides necessary shielding, heat removal, and structural integrity during the short time it contains the loaded MPC. The transfer cask is shown in Figure 4.2-8.

4.2.3.3.2 Structural Design

The structural evaluation for the HI-STORM 100 System is contained in HI-STORM 100 System FSAR Chapter 3, as amended by LAR 1014-1, and in the accident analyses in Chapter 8 of this SAR. Structural evaluations and analyses of the HI-STORM 100 System components have been performed for all design basis normal, off-normal, and accident conditions and for design basis natural phenomena conditions in accordance with 10 CFR 72, Subpart L. The structural evaluations confirm that the structural integrity of the HI-STORM 100 System is maintained under all design-basis loads with a high level of assurance to support the conclusion that the confinement, criticality control, radiation shielding, and retrievability criteria are met.

The following discussion verifies that the Diablo Canyon ISFSI site-specific criteria are enveloped by the HI-STORM 100 System design.

4.2.3.3.2.1 Dead and Live Loads

Dead loads are addressed in the HI-STORM 100 System FSAR, Section 2.2.1.1. The dead load of the overpack includes the weight of the concrete and steel cask and the MPC loaded with spent fuel. As identified in HI-STORM 100 System FSAR Table 2.1.6, the dead load of the overpack with the loaded MPC is calculated assuming the heaviest PWR assembly (B&W 15-by-15 fuel assembly type, wt = 1,680 lb, including nonfuel hardware) that bounds the Diablo Canyon fuel dead load (1,621 lb). The stresses calculated for the dead loads of the MPC and the overpack are shown to be within applicable Code allowables and, therefore, meet the Diablo Canyon ISFSI design criteria in Section 3.2.5 for dead loads.

The overpack is designed for two live loads, both of which act on the top of the overpack: (a) snow loads, and (b) the mating-device and transfer cask weight (during transfer operations) containing a fully loaded MPC. The HI-STORM 100 System FSAR uses a conservative, worst-case ground snow load of 100 lb/ft^2 as shown in HI-STORM 100 System FSAR Table 2.2.8, which exceeds any anticipated Diablo Canyon ISFSI site snow load. The live load capacity of the overpack is shown in HI-STORM 100 System FSAR, Section 3.4.4.3.2.1, to exceed the live load imposed by the loaded transfer cask. Since the live loads used in the HI-STORM 100 System generic analysis meet or exceed those that would be expected at the Diablo Canyon ISFSI, the HI-STORM 100 System FSAR analysis bounds the Diablo Canyon ISFSI design criteria specified for live loads and dead loads in Section 3.2.

As described above, the transfer cask dead load includes the weight of the cask plus the heaviest loaded MPC. The stresses calculated for the dead loads of the MPC and the transfer cask are shown to be within applicable Code allowables and, therefore, meet the Diablo Canyon ISFSI design criteria in Section 3.2.5 for dead loads.

4.2.3.3.2.2 Internal and External Pressure

Internal and external pressure loads are addressed in the HI-STORM 100 System FSAR, Sections 3.4.4.3.1.2 and 3.4.4.3.1.7, respectively. The normal and off-normal condition design pressures for the MPC are 100 psig for internal pressure and 0 psig (ambient) for external pressure as shown in Table 2.2.1 of the HI-STORM 100 System FSAR, as amended by LAR 1014-1. For accident conditions, the design pressure for the MPC is 200 psig for internal pressure and 60 psig for external pressure. Table 4.2-4 provides the maximum calculated MPC pressures for two normal conditions; no fuel rods ruptured and 1 percent fuel rods ruptured. The resultant pressure for the 10 percent rods rupture off-normal condition is provided in Section 8.1.1 and is below the 100 psig design pressure. The calculations assumed design basis heat load and bounding maximum fuel rod off-gas and internal pressure for DCPP fuel, considering a site-specific bounding value for fuel rod internal pressure. The internal pressure calculations for the MPC-32 bound those for the MPC-24, MPC-24E, and MPC-24EF because there is less free volume and more fuel inside the MPC-32 cavity, which creates higher pressures for the scenarios analyzed.

The MPCs are backfilled with helium during fuel loading operations to a nominal pressure of 31.3 psig at a reference temperature of 70°F. The internal pressure rises in proportion to the rise in MPC cavity gas absolute temperature due to the decay heat emitted by the stored fuel and as temperatures equilibrate to those associated with the normal condition 80°F day/night annual average ambient temperatures evaluated in the thermal analysis. This normal condition ambient temperature is higher than, and is therefore bounding for, the average day/night ambient temperature at the Diablo Canyon ISFSI site (Reference 12, Section 1.2.1.3).

MPC internal pressures were also evaluated for postulated accident conditions, including 100 percent fuel rod cladding rupture, assuming all rod fill gas and a conservative fraction of fission product gases, are released from the failed rods into the MPC. The resultant pressure from the 100 percent fuel rod rupture is provided in Section 8.2.14 and is below the MPC accident design pressure of 200 psig.

The stresses resulting from the internal and external pressure loads were shown to be within Code allowables. The Diablo Canyon ISFSI TS and SAR Section 10.2 ensure that the characteristics of the DCPP fuel to be loaded in a HI-STORM 100 System are consistent with the bounding fuel limits for array/class 17x17A and 17x17B fuel assemblies in Appendix B to the HI-STORM 100 System CoC (Reference 13). The pressure evaluations have appropriately accounted for the gas volume produced by burnable poison rod assemblies and integral fuel burnable absorber (IFBA) rods.

4.2.3.3.2.3 Thermal Expansion

Thermal expansion-induced mechanical stresses due to nonuniform temperature distribution are identified in Section 3.4.4.2 of the HI-STORM 100 System FSAR, as amended by LAR 1014-1. There is adequate space (gap) between the MPC basket and shell, and between the MPC shell and overpack or transfer cask, to ensure there will be no interference during conditions of thermally induced expansion or contraction. Table 4.4.15 of the HI-STORM 100 System FSAR, as amended by LAR 1014-1, provides a summary of HI-STORM 100 System component temperature inputs for the structural evaluation, consisting of temperature differences in the basket periphery and MPC shell between the top and bottom portions of the HI-STORM PWR MPC (MPC-24, MPC-24E, MPC-24EF, and MPC-32). The temperature gradients were used to calculate resultant thermal stresses in the MPC that were included in the load combination analysis. The stresses resulting from the temperature gradients were shown to be within Code allowables. Section 3.4.4.2 of the HI-STORM 100 System FSAR provides a discussion of the analysis and results of the differential thermal expansion evaluation. The Diablo Canyon ISFSI TS and SAR Section 10.2 ensure that the characteristics of the DCPP fuel to be loaded in a HI-STORM 100 System meet the limits delineated in Section 3.1.1. These limits are consistent with the bounding fuel limits for array/class 17-by-17A and 17-by-17B fuel assemblies in Appendix B to the HI-STORM 100 System CoC. Therefore, the thermal expansion evaluation, discussed above, in the

HI-STORM 100 System FSAR, as amended by LAR 1014-1, will bound the conditions at the Diablo Canyon ISFSI.

4.2.3.3.2.4 Handling Loads

Handling loads for normal and off-normal conditions are addressed in the HI-STORM 100 System FSAR, Sections 2.2.1.2, 2.2.3.1, and 3.1.2.1.1.2. The normal handling loads that were applied included vertical lifting and transfer of the overpack with a loaded MPC through all movements. The MPC and overpack were designed to withstand loads resulting from off-normal handling assumed to be the result of a vertical drop. In the case of Diablo Canyon, however, the vertical drop during onsite transport, outside the FHB/AB, is precluded with the use of a cask transporter that is designed, fabricated, inspected, maintained, and tested in accordance with NUREG-0612. Likewise, drops are precluded while the cask is lifted at the CTF since the CTF is designed, fabricated, inspected, operated, maintained, and tested in accordance with NUREG-0612. This approach is consistent with the provisions in the HI-STORM 100 System CoC described in Section 4.2.3.3.2.5 below. The preclusion of drop events was chosen as a design strategy to accommodate the anchored HI-STORM 100SA overpack, which requires a robust pad to ensure that the anchor studs and embedment structure remain fixed during postulated earthquake and tornado events.

The transfer cask is designed to withstand the loads experienced during routine handling, including lifting, upending, downending, and transfer to the CTF with a loaded MPC. Loads were increased by 15 percent in the analyses to account for dynamic effects from lifting operations (hoist load factor). The lifting trunnions, trunnion blocks, and load-bearing connection points (that is, pool lid bolted connections) were analyzed for normal handling loads, as described in Section 3.4.3.7 of the HI-STORM 100 System FSAR, as amended by LAR 1014-1.

4.2.3.3.2.5 Overpack/Transfer Cask Tipover and Drop

Outside the FHB/AB, tipover of a loaded overpack is a noncredible accident since the HI-STORM 100SA used at the Diablo Canyon ISFSI storage site is anchored to the ISFSI pad. When not on the ISFSI pad, the overpack will be either in the CTF or attached to the cask transporter (as described in Chapter 5). Both the CTF and the cask transporter are designed to preclude cask drops. The anchored HI-STORM 100SA overpack has been designed to withstand the worst-case, design-basis, seismic ground motion without failure of the anchor studs or the embedment. In addition, the anchored overpack has been analyzed for site-specific: (a) explosions, and (b) tornado wind concurrent with the impulse force of a large, design-basis, tornado-borne missile to verify that the anchorage design can resist the resultant overturning moment. The design criteria for the concrete storage pad and cask anchors are described in Section 3.3.2. The design and analysis of the concrete storage pad and anchorage embedment are discussed in Section 4.2.1.1.7. The analysis of the cask/pad interface under seismic loadings is described in Section 8.2.1.

The CTF and cask transporter are designed, fabricated, inspected, operated, maintained, and tested in accordance with NUREG-0612. Thus, there is no need to establish lift height limits or to postulate cask-drop events during transport to the pad, including activities at the CTF.

The cask lifting assembly on the transporter is a horizontal beam that is supported by towers at each end with hydraulic lifting towers. During movement of the transporter with the cask in a fixed elevation, a redundant load support system is used. This is further described in Section 4.3 and in Chapter 5.

4.2.3.3.2.6 Tornado Winds and Missiles

Design criteria for tornado wind and missile impact are discussed in Section 3.2.1 of this SAR. The HI-STORM 100 System is designed to withstand pressures, wind loads, and missiles generated by a tornado, as described in Section 2.2.3.5 of the HI-STORM 100 System FSAR. In Section 8.2.2, the analysis of the Diablo Canyon ISFSI site design-basis tornado, including pressures, wind loads, and missiles is discussed. The MPC confinement boundary remains intact under all design-basis, tornado-wind, and missile-load combinations.

Tornado-wind and missile loads are evaluated for the overpack and the transfer cask. In the case of the transfer cask, the loaded transfer cask is always maintained in a restrained condition by the handling equipment while it is in a vertical position. Tipover or instability due to tornado-wind or missile impact is therefore a noncredible accident for the transfer cask (HI-STORM 100 System FSAR, Sections 2.2.3.1 and 3.4.8). However, missile penetration effects on the transfer cask and overpack have been evaluated.

4.2.3.3.2.7 Flood

Flooding is addressed in Sections 3.2.2 and 8.2.3 of this SAR and in Sections 3.1.2.1.1.3 and 3.4.6 of the HI-STORM 100 System FSAR. The MPC is designed to withstand hydrostatic pressure (full submergence) up to a depth of 125 ft and horizontal loads due to water velocity up to 15 fps without tipping or sliding. The Diablo Canyon ISFSI and CTF are above probable maximum flood conditions; therefore, the HI-STORM 100 System FSAR evaluation bounds conditions at the Diablo Canyon ISFSI storage and CTF sites. Thus, the requirements of 10 CFR 72.122(b) are met with regard to floods.

4.2.3.3.2.8 Earthquake

Design criteria for earthquake loads at the Diablo Canyon ISFSI are discussed in Section 3.2.3. The results of the seismic analyses are discussed in Section 8.2.1. Analyses were performed using the DE, DDE, HE, and LTSP ground motions to verify that the Diablo Canyon ISFSI SSCs (including components of the HI-STORM 100 system) meet their design requirements of 10 CFR 72.122(b) with regard to earthquakes. Although not considered a licensing basis, PG&E has evaluated the effects of these recent data (ILP ground motions, Section 2.6.2.4.2) to ensure appropriate design margins are maintained.

4.2.3.3.2.9 Explosion Overpressure

Explosion overpressure loads are addressed in Sections 3.3.1.6 and 8.2.6.2.1 of this SAR and in Sections 3.4.7.2 and 11.2.11 of the HI-STORM 100 System FSAR. The HI-STORM 100 System MPC is analyzed and designed for accident external pressures up to 60 psig. The transfer cask overpressure design limit is 384 psig. The overpack is designed for steady-state and transient external pressures of 5 psig and 10 psig, respectively. As shown in Section 8.2.6, the Diablo Canyon ISFSI is not subject to credible explosions (that is, transient external pressures) that are in excess of 10 psig. Since the Diablo Canyon ISFSI will not experience explosion pressures that exceed 10 psig, the HI-STORM 100 System bounds the expected overpressure due to explosions at the Diablo Canyon ISFSI, as required per 10 CFR 72.122(c).

4.2.3.3.2.10 Fire

Design criteria for fire loads are addressed in Section 3.3.1.6 and in the HI-STORM 100 System FSAR, Section 11.2.4. The HI-STORM 100 System was analyzed for a fire of 50 gallons of combustible fuel from the cask transporter encircling the cask, resulting in temperatures up to 1,475°F and lasting for a period of 3.6 minutes. The analysis also evaluated the post-fire temperatures of the system for the duration of 10 hours. The evaluation of this fire and its effect on both the loaded overpack and the loaded transfer cask is discussed in Section 11.2.4 of the HI-STORM 100 System FSAR. The results of the analysis show that the intense heat from the fire only partially penetrated the concrete-cask wall. This fire would cause less than 1 inch of concrete to exceed temperature limits, and would have a negligible effect on shielding or MPC and fuel temperatures.

For the Diablo Canyon ISFSI, the threat of fire was evaluated for a variety of potential sources in addition to the transporter fire, including a vehicle fuel tank, other local fuel tanks, other combustible materials, and a vegetation fire. The results of this evaluation are discussed in Section 8.2.5.

The HI-STORM 100 System design meets the Diablo Canyon ISFSI design criteria for accident-level thermal loads as required per 10 CFR 72.122(c).

4.2.3.3.2.11 Lightning

A lightning strike of the HI-STORM 100 System at the Diablo Canyon ISFSI is addressed in Sections 3.2.6 and 8.2.8. The lightning strike accident is also discussed in the HI-STORM 100 System FSAR, Sections 2.2.3.11 and 11.2.12. The analysis shows that the lightning will discharge through the steel shell of the overpack or the transfer cask to ground through a ground connector. The lightning current will discharge through the affected steel structure and will not affect the MPC, which provides the confinement boundary for the spent fuel.

Therefore, the HI-STORM 100 System design meets the Diablo Canyon ISFSI design criteria in Section 3.2.6 for lightning protection, as required in 10 CFR 72.122(b).

4.2.3.3.2.12 500-kV Line Drop

The Diablo Canyon ISFSI storage site is located underneath and adjacent to 500-kV transmission lines. The HI-STORM 100 System design criteria for a 500-kV transmission line dropping and striking the HI-STORM 100 overpack or transfer cask is similar to the lightning strike. Section 8.2.8 of this SAR discusses the analysis of this accident and demonstrates that the MPC remains protected. The HI-STORM 100 System, therefore, meets the requirements of 10 CFR 72.122(b) for the 500-kV line break.

4.2.3.3.3 Thermal Design

The environmental thermal design criteria for the Diablo Canyon ISFSI are discussed in Chapter 3.2.7. Thermal performance for the HI-STORM 100 System is addressed in Chapter 4 of the HI-STORM 100 System FSAR, as amended by LAR 1014-1. The HI-STORM 100 System is designed for long-term storage of spent fuel and safe thermal performance during onsite loading, unloading, and transfer operations. The HI-STORM 100 System is also designed to minimize internal stresses from thermal expansion caused by axial and radial temperature gradients.

The HI-STORM 100 System is designed to transfer decay heat from the spent fuel assemblies to the environment. The MPC design, which includes the all-welded honeycomb basket structure, provides for heat transfer by conduction, convection, and radiation away from the fuel assemblies, through the MPC basket structure and internal region, to the MPC shell. The internal MPC design incorporates top and bottom plenums, with interconnected downcomer paths, to accomplish convective heat transfer via the thermosiphon effect. The MPC is pressurized with helium, which assists in transferring heat from the fuel rods to the MPC shell by conduction and convection. Gaps exist between the basket and the MPC shell to permit unrestrained axial and radial thermal expansion of the basket without contacting the shell, thus minimizing internal stresses. The stainless steel basket conducts heat from the individual spaces for storing fuel assemblies out to the MPC shell.

The HI-STORM 100SA overpack design provides an annular space between the MPC shell and the inner steel liner of the overpack for airflow up the annulus. Relatively cool air enters the four inlet ducts at the bottom of the overpack, flows upward through the annulus removing heat from the MPC shell by convection, and exits the four outlet ducts at the top of the cask.

The thermal analysis, discussed in Chapter 4 of the HI-STORM 100 System FSAR, as amended by LAR 1014-1, was performed using the ANSYS and FLUENT (Reference 14) computer codes. The HI-STORM PWR MPCs (MPC-24, MPC-24E, MPC-24EF, and MPC-32) were evaluated to determine the temperature distribution under long-term, normal storage conditions, assuming the MPCs are loaded with design basis PWR

fuel assemblies. Maximum-assembly, decay-heat-generation rates for fuel to be loaded into these two MPC models are specified in SAR Section 10.2. The decay-heat-generation limits vary by cooling time.

The thermal analysis assumed that the HI-STORM overpacks are in an array, subjected to an 80°F-annual-average ambient temperature, with full insolation. The annual-average temperature takes into account day-and-night and summer-and-winter temperatures throughout the year. The annual-average temperature is the principal design parameter in the HI-STORM 100 System design analysis, because it establishes the basis for demonstration of long-term spent nuclear fuel integrity. The long-term integrity of the spent fuel cladding is a function of the average-ambient temperature over the entire storage period, which is assumed to be at the maximum annual-average temperature in every year of storage for conservatism. The results of this analysis are presented in Tables 4.4.9, 4.4.26 and 4.4.27 of the HI-STORM 100 System FSAR, as amended by Holtec LAR 1014-1, for MPC-24, MPC-24E, MPC-24EF, and MPC-32, respectively. The results, summarized in HI-STORM 100 System FSAR Table 4.2-3, indicate that temperatures of all components are within normal condition temperature limits. These results bound the Diablo Canyon ISFSI site since the average-annual temperature at the site is only 55°F (Section 2.3.2).

Section 11.1.2 of the HI-STORM 100 System FSAR discusses the temperatures of the HI-STORM 100 System for a maximum off-normal, daily-average ambient temperature of 100°F, which is an increase of 20°F from the normal conditions of storage discussed above. The maximum off-normal temperatures were calculated by adding 20°F to the maximum normal temperatures from the highest component temperature for the MPC-24, MPC-24E, MPC-24EF, and MPC-32. All of the maximum off-normal temperatures are below the short-term peak fuel cladding temperature limits (HI-STORM 100 System FSAR Table 2.2.3). Therefore, all components are within allowable temperatures for the 100°F-ambient-temperature condition. Since the highest hourly temperature recorded at the Diablo Canyon Site is 97°F (Section 2.3.2), the HI-STORM 100 System FSAR evaluation bounds the Diablo Canyon ISFSI site.

The thermal analysis in the HI-STORM 100 System FSAR discussed above includes the following global assumptions: (a) the concrete pad is assumed to be an insulated surface (that is, no heat transfer to or from the pad is assumed to occur), (b) adjacent casks are assumed to be sufficiently separated from each other (that is, cask pitch is sufficiently large) so that their ventilation actions are autonomous, and (c) the cask is assumed to be subject to full solar insolation on its top surface as well as view-factor-adjusted solar insolation on its lateral surface, based on 12-hour insolation levels recommended in 10 CFR 71 (800g-cal/cm^2 averaged over a 24-hour period as allowed in NUREG-1567). The evaluation of insolation is further discussed in Section 4.4.1.1.8 of the HI-STORM 100 System FSAR, as amended by Holtec LAR 1014-1.

Ambient-temperature and incident solar radiation (insolation) values applicable to the ISFSI site are summarized in Section 2.3.2. The highest-recorded-hourly temperature at the Diablo

Canyon site is 97°F and the lowest temperature was below freezing for a few hours. The annual-average temperature is approximately 55°F. The maximum insolation values for the ISFSI site are estimated to be 766 g-cal/cm^2 per day for a 24-hour period and 754 g-cal/cm^2 for a 12-hour period.

Second-order effects such as insolation heating of the concrete pad, heating of feed air traveling downward between casks and entering the inlet ducts of the reference cask, and radiative heat transfer from adjacent spent fuel casks were not explicitly modeled in the HI-STORM 100 System FSAR analysis.

Within a loaded transfer cask, heat generated in the MPC is transported from the contained fuel assemblies to the MPC shell. A small, diametrical air gap exists between the outer surface of the MPC and the inner surface of the transfer cask. Heat is transported across this gap by the parallel mechanisms of conduction, natural convection, and thermal radiation. Assuming that the MPC is centered and does not contact the transfer cask walls conservatively minimizes heat transport across this gap. Additionally, thermal expansion that would minimize the gap is conservatively neglected.

Heat is transported through the cylindrical wall of the transfer cask by conduction through successive layers of steel, lead, and steel. A water jacket, which provides neutron shielding for the transfer cask, surrounds the cylindrical steel wall. The water jacket is composed of a carbon steel shell attached to the outer shell of the transfer cask by radial fins. Conduction heat transfer occurs through both the water cavities and the fins. While the water jacket openings are sufficiently large for natural convection loops to form, this mechanism is conservatively neglected. Heat is passively rejected to ambient from the outer surface of the transfer cask by natural convection and thermal radiation.

In the vertical position, the bottom face of the transfer cask is in contact with a supporting surface. This face is conservatively modeled as an insulated surface. Because the transfer cask is not used for long-term storage in an array, radiative heat blocking does not need to be considered. The transfer cask top lid is modeled as a surface with convection, radiative heat exchange with air, and a constant, maximum-incident solar heat flux load. Insolation on cylindrical surfaces is conservatively based on 12-hour levels prescribed in 10 CFR 71 and averaged on a 24-hour basis. Concise descriptions of these models are described in Section 4.5 of the HI-STORM 100 System FSAR, as amended by LAR 1014-1.

The HI-STORM 100 System was analyzed for an extreme hot ambient temperature of 125°F averaged over a 72-hour time period. Section 8.2.10 of this SAR and Section 11.2.15 of the HI-STORM 100 System FSAR, as amended by LAR 1014-1, provide discussions of the analysis of this extreme temperature condition. The ambient temperature is applied coincident with full solar insolation. Resulting fuel cladding temperatures are well below their short-term temperature limit. The balance of the HI-STORM 100 System structure remains insignificantly affected. Since the extreme hot ambient temperature at the Diablo Canyon site

is 104°F, the extreme hot ambient temperature evaluation in the HI-STORM 100 System FSAR bounds the conditions at Diablo Canyon.

The HI-STORM 100 System was also evaluated for a -40°F, extreme-low ambient temperature condition, as discussed in Section 4.4.3 of the HI-STORM 100 System FSAR. Zero decay heat generation from spent fuel, and no solar insolation were conservatively assumed. All materials of construction for the MPC and overpack will perform their design function under this extreme cold condition. Since the minimum temperature at the Diablo Canyon site is greater than 24°F (Table 3.4-1), the extreme low ambient temperature evaluation in the HI-STORM 100 System FSAR bounds the conditions at Diablo Canyon.

The thermal performance of the MPC to limit fuel cladding temperature inside the transfer cask during welding, draining, drying, and helium backfill operations, and during transportation of the loaded transfer cask to the CTF is bounded by the thermal evaluation performed with the MPC under a hypothetical, complete-vacuum condition. The vacuum condition is bounding for the other transient operational conditions mentioned above, because there is no fluid medium to transfer heat from the fuel to the MPC shell. In the other conditions, there is some amount of either helium or water in the MPC cavity to enhance heat transfer. All internal MPC heat transfer in the vacuum condition is through conduction and radiation.

Sections 4.5.1.1.4 and 4.5.2.2 of the HI-STORM 100 System FSAR, as amended by LAR 1014-1, discuss the thermal evaluation of the MPC under vacuum conditions and the resultant MPC and fuel cladding temperatures with design-basis heat load. Fuel cladding temperatures are shown in HI-STORM 100 System FSAR Table 4.5.9, and are all less than 1,000°F, which is less than the short-term temperature limit of 1,058°F. The design-basis heat load used for this evaluation bounds the heat load for all combinations of DCPP fuel to be loaded into the HI-STORM 100 System. The characteristics of the operations to be performed at Diablo Canyon are the same as those described in the HI-STORM 100 System FSAR. Therefore, the evaluations described in Section 4.5 of the HI-STORM 100 System FSAR, as amended by Holtec LAR 1014-1, bound operations at DCPP.

The above discussion demonstrates that the HI-STORM 100 System as deployed at the Diablo Canyon ISFSI meets the requirements of 10 CFR 72.122(h), 72.128(a)(4), and 72.236(f) and (g) for thermal design.

4.2.3.3.3.1 HI-STORM Overpack at the CTF

The site-specific design of the Diablo Canyon CTF involves transferring a loaded MPC into the overpack with the overpack located below grade in a vault. The thermal implications of the difference between a loaded overpack located in a vault and one located at grade level have been evaluated.

Under normal conditions, the loaded overpack will remain in the vault only for the time it takes to remove the transfer cask from atop the overpack, retrieve and install the overpack lid, and raise the overpack out of the vault with the CTF lift system. This is expected to take less than 4 hours and has an insignificant effect on heat removal and fuel cladding temperatures.

Under off-normal conditions, such as a power failure affecting the CTF lift system, the condition could last several hours, depending upon the time it takes to complete corrective actions to restore power, or to provide an alternate power source. The effect of a loss of electrical power on the ability of the overpack to transfer the heat from the MPC to the environs is discussed in Section 8.1.6. The time frame computed before short-term peak fuel cladding temperature limits are reached is a sufficient amount of time to initiate corrective actions described in Section 8.1.6.

Accident conditions, such as a failure of one lift jack screw, may result in the loaded overpack being in the down position for an extended period of time, depending upon the severity of the failure. This accident and the corrective actions are discussed in more detail in Section 8.2.17 and the Diablo Canyon ISFSI TS.

4.2.3.3.4 Shielding Design

Shielding design and performance for the HI-STORM 100 System is addressed in Section 3.3.1.5.2 and Chapter 7 of this SAR specifically for the Diablo Canyon ISFSI, and in Chapter 5 of HI-STORM 100 System FSAR for the HI-STORM 100 System generically. The HI-STORM 100 System is designed to maintain radiation exposure ALARA in accordance with 10 CFR 72.126(a). The concrete overpack is designed to limit the average external contact dose rates (gamma and neutron) to 60 mrem/hr on the sides, 60 mrem/hr on top, and 60 mrem/hr at the air inlets and outlets based on HI-STORM design basis fuel.

The overpack is a massive structure designed to provide gamma and neutron shielding of the spent fuel assemblies stored within the MPC. Most of the side shielding is provided by the overpack, although the MPC structure is credited in the shielding model. The overpack steel inner shell, the concrete-filled annulus, and the steel outer shell provide radiation shielding for the side of the overpack. The steel MPC lid and the overpack lid provide axial shielding at the top. The MPC lid is approximately 10 inches thick and is stainless steel. The overpack lid consists of a 4-inch thick steel top plate and steel-encased concrete. The lid shield configurations differ between the HI-STORM 100 and the HI-STORM 100S designs as shown on the respective drawings in Section 1.5 of the HI-STORM 100 System FSAR, as amended by LAR 1014-1. In both designs, particular emphasis is placed on providing overpack lid shielding above the annulus between the MPC and the overpack inner shell, which is a streaming path.

The configuration of the inlet and outlet ducts in relation to the MPC prevents a direct radiation-streaming path from the MPC to outside the cask. The duct dose rates are further reduced by the installation of duct photon attenuators to minimize scatter (Figure 4.2-7).

The HI-STORM 100 System design allows for necessary personnel access during inspection and maintenance operations, while keeping dose rates ALARA. The HI-STORM 100 System FSAR, Section 5.1.1, as amended by LAR 1014-1, provides generic calculated dose rates around the sides and top of the HI-STORM 100S overpack. Predicted Diablo Canyon ISFSI dose rates and site-specific dose evaluations are presented in Chapter 7 for the HI-STORM 100 System, and meet the requirements of 10 CFR 72.104 and 72.106.

The transfer cask provides shielding to maintain occupational exposures ALARA in accordance with 10 CFR 20, while also maintaining the maximum load on the FHB crane hook to 125 tons or less. The plant specific dose rates for a transfer cask loaded with design basis fuel are used to perform the occupational exposure estimate for MPC loading, closure, and transfer operations, as described in Chapter 7 of this SAR. The actual dose rates from a loaded transfer cask during operations in support of loading fuel for the Diablo Canyon ISFSI will be lower because the actual MPCs to be loaded will not contain design-basis fuel in every fuel storage location. Occupational exposures during transfer cask operations will be monitored and maintained ALARA in accordance with the DCPP radiation protection program and the requirements of 10 CFR 20.

The above discussion demonstrates that the HI-STORM 100 System as used at the Diablo Canyon ISFSI meets the requirements of 10 CFR 72.104, 72.106, 72.128(a)(2), and 72.236(d) for shielding design.

4.2.3.3.5 Criticality Design

Criticality of the HI-STORM 100 System is addressed in Section 3.3.1.4 of this SAR and Chapter 6 of the HI-STORM 100 System FSAR, as amended by Holtec LAR 1014-1. The HI-STORM 100 System is designed to maintain the spent fuel subcritical in accordance with 10 CFR 72.124(a) and (b) with the MPC materials and geometry. The acceptance criterion for the prevention of criticality is that k_{eff} remain below 0.95 for all normal, off-normal, and accident conditions.

Criticality safety of the HI-STORM 100 System depends upon the following four principal design parameters:

- Administrative limits on the maximum fuel assembly enrichment and physical properties acceptable for storage in the MPC

- The inherent geometry of the fuel basket designs within the MPC, including the flux-traps in the MPC-24, MPC-24E, and MPC-24EF (water gaps for loading fuel into submerged MPCs)

- The incorporation of permanent, fixed, neutron-absorbing panels (Boral) in the fuel basket structure to assist in control of reactivity

- Administrative controls requiring minimum concentrations of soluble boron in the MPC water during fuel loading and unloading, depending upon MPC model and fuel enrichment

The criticality analysis performed for the HI-STORM 100 System assumes only fresh fuel with no credit for burnup as a conservative bounding condition. In addition, no credit is taken for fuel-related burnable neutron absorbers, and it is assumed that the Boron-10 content in the Boral is only 75 percent of the manufacturer's minimum specified content. Other assumptions made to ensure the results of the analysis are conservative are identified in Section 6.1 of the HI-STORM 100 System FSAR. In its storage configuration, the HI-STORM 100 System is dry (no moderator), and the reactivity is very low (k_{eff} less than 0.515). At the Diablo Canyon ISFSI, the fuel will always be in a dry, inert-gas environment. It is sealed within a welded MPC, and no credible accident will result in water entering the MPC.

The limiting reactivity condition occurs in the SFP during fuel loading, where assemblies are loaded into the MPC in close proximity to each other, with moderator between assemblies. All fuel loaded into the MPC-32, regardless of enrichment, requires a certain amount of soluble boron in the MPC during loading to preserve the assumptions of the criticality analyses. Higher enriched fuels loaded into the MPC-32, MPC-24, MPC-24E, or MPC-24EF also require soluble boron in the MPC during loading operations. The Diablo Canyon ISFSI TS ensure that soluble boron is appropriately maintained during fuel loading operations.

The results of the criticality analyses of different fuel types are shown in Chapter 6 of the HI-STORM 100 System FSAR, as amended by LAR 1014-1, for the MPC-24, MPC-24E, MPC-24EF, and MPC-32. The results confirm that the maximum reactivities of the MPCs are below the design criteria (k_{eff} less than 0.95) for fuels with specified maximum allowable enrichments, considering calculational uncertainties. The PWR fuel types for which these analyses were performed are shown in Table 2.1.3 of the HI-STORM 100 System FSAR. With the exception of DCPP fuel assemblies with annular fuel pellets and Zirlo clad fuel with burnup > 45,000 MWD/MTU, all DCPP fuel is bounded by array/classes 17x17A and 17x17B. No credit is taken for neutron poison in the form of gadolinium in the fuel pellets or in the IFBA rods, therefore, fuel assemblies containing these poisons are acceptable for loading.

Accident conditions have also been considered, and no credible accidents have been identified that would result in exceeding the regulatory limit on reactivity. In Section 6.1 of the HI-STORM 100 System FSAR, as amended by LAR 1014-1, Holtec determined that the physical separation between overpacks due to the large diameter and cask pitch, and the concrete and steel radiation shields, are each adequate to preclude any significant neutronic coupling between HI-STORM 100 Systems.

Section 6.4.4 of the HI-STORM 100 System FSAR, as amended by Holtec LAR 1014-1, discusses the results of criticality analyses on MPCs storing damaged fuel in a Holtec

damaged fuel container. Analyses were performed for three possible scenarios. The scenarios are:

- Lost or missing fuel rods, calculated for various numbers of missing rods in order to determine the maximum reactivity.
- Fuel assembly broken with the upper segments falling into the lower segment creating a close-packed array. For conservatism, the array was assumed to retain the same length as the original fuel assemblies.
- Fuel pellets lost from the assembly and forming powdered fuel dispersed through a volume equivalent to the height of the original fuel, with the flow channel and cladding material assumed to disappear.

Results of these analyses confirm that, in all cases, the maximum reactivity of the HI-STORM 100 System with design-basis failed fuel in the most adverse post-accident condition will remain well below the regulatory limit within the enrichment range analyzed.

The HI-STORM 100 System is designed such that the fixed neutron absorber (Boral) will remain effective for a storage period greater than 20 years, and there are no credible means to lose the Boral effectiveness. As discussed in Section 6.3.2 of the HI-STORM 100 System FSAR, the reduction in Boron-10 concentration due to neutron absorption from storage of design-basis fuel in a HI-STORM 100SA overpack over a 50-year period is expected to be negligible. Further, the analysis in Appendix 3.M.1 of the HI-STORM 100 System FSAR demonstrates that the sheathing, which affixes the Boral panel, remains in place during all credible accident conditions, and thus the Boral panel remains fixed for the life of the Diablo Canyon ISFSI. Therefore, verification of continued efficacy of the Boral neutron absorber is not required. This is consistent with the requirements of 10 CFR 72.124(b).

For MPCs filled with pure water, the reactivity of any PWR assembly with nonfuel hardware inserted into the guide tubes is bounded by (that is, lower than) the reactivity of the same assembly without the inserts. This is because the inserts reduce the amount of moderator, while the amount of fissile material remains unchanged. In the presence of soluble boron in the water, especially for higher-required soluble boron concentrations, it is possible that the nonfuel hardware in the PWR assembly results in an increase of reactivity. This is because the insert not only replaces water, but also replaces the neutron absorber in the water with a nonpoison material. To account for this effect, analyses with and without nonfuel hardware in the assemblies were performed for higher soluble boron concentrations in support of Holtec LAR 1014-1. The highest reactivities for either case are used as the basis of the criticality evaluation. Section 6.4.8 of the HI-STORM 100 System FSAR, as amended by LAR 1014-1, provides additional discussion of the criticality effect of nonfuel hardware stored with PWR spent fuel assemblies.

During cask loading and unloading activities in the FHB/AB, criticality monitoring requirements of 10 CFR 72.124(c) will be met using a combination of installed and portable monitoring radiation monitoring instrumentation, in accordance with GDC-63 (to detect conditions that may result in excessive radiation levels and to initiate appropriate safety actions). As discussed in PG&E letter DCL-97-058, dated April 3, 1997, the radiation monitoring instrumentation generally conforms to the guidance of Regulatory Guide 8.12, "Criticality Accident Alarm Systems," and ANSI/ANS 8.3-1979, "Criticality Accident Alarm System." As discussed in DCPP FSAR Update Section 9.1.2.2, spent fuel pool radiation monitors RM-58 and RM-59 provide personnel protection and general surveillance of the spent fuel pool area. As discussed in DCL-97-058, portable radiation monitors will be placed in the cask washdown area to provide personnel protection and general surveillance of this area. On November 12, 1997, the NRC granted PG&E an exemption from the requirements of 10 CFR 74 concerning criticality monitors. PG&E is requesting an exemption from the 10 CFR 72.174(c) criticality monitoring requirement by requesting an extension of the NRC's November 12, 1997, exemption for the FHB/AB to envelop the activities associated with the Diablo Canyon ISFSI SAR. Refer to the 10 CFR 50 LAR in support of ISFSI licensing. The Holtec design, associated procedural controls, the proposed Diablo Canyon ISFSI Technical Specifications, and SAR Section 10.2 preclude accidental criticality when the spent fuel has been properly placed in the storage ask confinement system and the confinement system has been adequately drained, dried, inerted, and sealed.

The analysis of a fuel assembly drop onto the racks, and the drop of a fuel cask in the SFP, will show criticality is prevented and is also addressed in the 10 CFR 50 LAR in support of ISFSI licensing.

The above discussion demonstrates that the HI-STORM 100 System as deployed at the Diablo Canyon ISFSI meets the requirements of 10 CFR 72.124 and 72.236(c) for criticality design.

4.2.3.3.6 Confinement Design

Confinement design for the HI-STORM 100 System is addressed in Chapter 7 of the HI-STORM 100 System FSAR, as amended by LAR 1014-1. The confinement vessel of the HI-STORM 100 System is the MPC, which provides confinement of all radionuclides under normal, off-normal, and accident conditions in accordance with 10 CFR 72.122(h). The MPC consists of the MPC shell, bottom base plate, MPC lid, vent and drain port cover plates, and the MPC closure ring, which form a totally welded vessel for the storage of spent fuel assemblies. The MPC requires no valves, gaskets, or mechanical seals for confinement. All components of the confinement system are classified as important to safety.

The MPC is a totally welded pressure vessel designed to meet the stress criteria of ASME Section III, Subsection NB. No bolts or fasteners are used for closure. All closure welds are examined using the liquid-penetrant method and helium leak tested to ensure their integrity. Two penetrations are provided in the MPC lid for draining, drying, and backfilling during loading operations. Following loading operations, vent and drain port cover plates are welded

to the MPC lid. A closure ring, which covers the penetration cover plates and welds, is welded to the MPC lid to provide redundant closure of the MPC vessel. The loading and welding operations are performed inside the DCPP FHB/AB. There are no confinement boundary penetrations required for MPC monitoring or maintenance during storage.

The confinement features of the HI-STORM 100 System meet the requirements of 10 CFR 72.122(h).

4.2.4 INSTRUMENTATION SYSTEM DESCRIPTION

Monitoring of the loaded casks on the storage pad is necessary to ensure that the passive, air-cooled, convective heat transfer system for the MPC and overpack remains operable. Rather than install an active temperature monitoring system, PG&E has chosen to visually monitor overpack inlet and outlet air duct screens, as required by the Diablo Canyon ISFSI Technical Specifications, to verify the screens are free of blockage and intact.

4.2.5 COMPLIANCE WITH GENERAL DESIGN CRITERIA

Table 4.2-5 provides a tabular presentation of the locations in this SAR and/or the HI-STORM 100 System FSAR where compliance with the General Design Criteria of 10 CFR 72, Subpart F, is shown to be met.

4.2.6 REFERENCES

1. Final Safety Analysis Report for the HI-STORM 100 System, Holtec International Report No. HI-2002444, Revision 0, July 2000.

2. License Amendment Request 1014-1, Holtec International, Revision 2, July 2001 including Supplements 1 through 4 dated August 17, 2001; October 5, 2001; October 12, 2001; and October 19, 2001; respectively.

3. ANSYS Finite Element Modeling, ANSYS Inc., Southpointe 275 Technology Drive; Canonsburg, PA.

4. ACI-349-97, Code Requirements for Nuclear Safety Related Concrete Structures, American Concrete Institute (with 10/01/00 Draft Appendix B).

5. 10 CFR 72, Licensing Requirements for the Independent Storage of Spent Nuclear Fuel and High-Level Radioactive Waste.

6. ANSI N14.6, Special Lifting Devices for Shipping Containers Weighing 10,000 Pounds (4,500 kg) or More, American National Standards Institute, 1993 Edition.

7. Control of Heavy Loads at Nuclear Power Plants, USNRC, NUREG- 0612, July 1980.

8. Boiler and Pressure Vessel Code, Section III, Division I, American Society of Mechanical Engineers, 1995 Edition including 1996 and 1997 addenda.

9. Submittal of Holtec Proprietary and Non-Proprietary Drawing Packages, PG&E Letter to the NRC, DIL-01-008, dated December 21, 2001.

10. ACI 349-85, Code Requirements for Nuclear Safety Related Concrete Structures, American Concrete Institute.

11. Classification of Transportation Packaging and Dry Spent Fuel Storage System Components According to Importance to Safety, USNRC, NUREG/CR-6407, February 1996.

12. Diablo Canyon Power Plant Units 1 & 2 Final Safety Analysis Report Update, Revision 14, November 2001.

13. 10 CFR 72 Certificate of Compliance No. 1014 for the HI-STORM 100 System, Holtec International, Revision 0, May 2000.

14. FLUENT Computational Fluid Dynamics Software, Fluent, Inc., Centerra Resource Park, 10 Cavendish Court, Lebanon, NH 03766.

4.3 TRANSPORT SYSTEM

The cask transporter is designed and used to safely lift, handle, and transport a HI-TRAC transfer cask or a HI-STORM 100SA overpack, loaded with spent fuel and associated nonfuel hardware, between the DCPP FHB/AB, the CTF, and the Diablo Canyon ISFSI storage pad site as described below. The movement is conducted exclusively on the DCPP site as shown in Figure 2.1-2. Due to its important-to-safety classification, the transporter is licensed under 10 CFR 72 (Reference 1). The cask transporter is designed to withstand all design-basis, natural-phenomena events while lifting, handling, and moving the loaded transfer cask or overpack without impairing its ability to safely hold the load.

4.3.1 FUNCTION

The functions of the cask transporter considered important to safety are:

- Transporting the loaded transfer cask, in the horizontal orientation, between the FHB/AB and the CTF.
- Upending and downending the loaded transfer cask between the horizontal and vertical orientations at the CTF.
- Lifting the loaded transfer cask and placing it atop the overpack at the CTF.
- Facilitating the transfer of the loaded MPC between the transfer cask and the overpack.
- Lifting the loaded overpack at the CTF.
- Transporting the loaded overpack between the CTF and its storage location on the Diablo Canyon ISFSI storage pad.

The cask transporter is capable of traveling over all of the road surfaces on the transport route. The road surfaces and underground facilities (see Section 4.3.3) will be evaluated to ensure the capability to support the weight of a cask transporter plus a loaded transfer cask or overpack.

4.3.2 COMPONENTS

This section describes the components used to lift, handle, and transport the loaded transfer cask and overpack to the CTF and Diablo Canyon ISFSI storage pad. Sections 3.3.3 and 3.4 provide discussion of the design criteria for the cask transportation system. Section 8.2.1 summarizes the results of the stress analyses under seismic loading, which bound the normal operation loads. Table 4.3-1 summarizes the functions of, and applicable design codes for, the transport system components that are considered important to safety and covered by an approved 10 CFR 72 quality assurance program.

4.3.2.1 Cask Transporter

4.3.2.1.1 Description

The cask transporter, shown in Figures 4.3-1 through 4.3-3, is a self-propelled, open-front, tracked vehicle used for handling and onsite transport of overpacks and the transfer cask with an MPC contained therein. It is nominally 25 ft long, 19 ft wide, and weighs approximately 85 tons, unloaded. It is designed with two steel tracks to spread out the load on the transport route surface as a distributed pressure load. These tracks provide the means to maneuver the cask transporter around the site. On top of the main structure is a lifting beam supported by two lifting towers that use hydraulic cylinders to provide the lifting force. The industrial-grade hydraulic cylinders are made of carbon steel to ensure high strength and ductility for all service conditions. The cask transporter is diesel-powered and is limited to a fuel volume of 50 gallons to comply with the Diablo Canyon ISFSI TS.

4.3.2.1.2 Design

The cask transporter is custom-designed for conditions at the Diablo Canyon ISFSI site, including the transport route with its maximum grade of approximately 8.5 percent. It will remain stable and will not overturn, experience structural failure, or leave the transport route should a design-basis seismic event occur while the loaded transfer cask is being moved to the CTF; while transferring an MPC at the CTF; or while moving a loaded overpack from the CTF to the storage pad. In addition, the cask transporter is designed to withstand DCPP design-basis tornado winds and tornado-generated missiles without overturning, dropping the load, or leaving the transport route. Other natural phenomena, such as lightning strikes, floods and fires have been evaluated and accounted for in the cask transporter design. All design criteria for natural phenomena used to design the cask transporter are specific to the Diablo Canyon ISFSI site (see Sections 3.2 and 3.4 for detailed information).

A lightning strike on the cask transporter would not structurally affect the transporter's ability to hold the load. Due to the massive amount of steel in the structure, the current would be transmitted to the ground without significantly damaging the transporter. However, the driver may be affected by a lightning strike. Therefore, the transporter design includes fail-safe features to automatically shutdown the vehicle if the operator is injured or incapacitated for any reason.

Flooding is not a concern on the transport route for reasons discussed in Section 3.2.2. Sources of fires and explosions have been identified in Sections 2.2 and 3.3.1.6 and in Table 3.4-1, and have been evaluated with respect to cask integrity in Sections 8.2.5 and 8.2.6. Fixed sources of fire and explosion are sufficiently far from the transport route to be of no concern. Mobile sources of fire and explosion, such as fuel tanker trucks, will be kept at a safe distance away from the transporter during loaded cask movement through the use of administrative controls.

The cask transporter is capable of forward and reverse movement as well as turning and stopping. It includes an on-board engine that is capable of supplying enough power to perform its design functions. The cask transporter includes fail-safe service brakes (that is, setting brakes that automatically engage in any loss of power) and an independent parking brake. The brake system is capable of stopping and holding a fully loaded cask transporter on the maximum design grade. The cask transporter is also equipped with an automatic drive brake system that applies the brakes if there is a loss of hydraulic pressure or the drive controls are released. Additionally, the fully loaded cask transporter is not capable of coasting on a 10 percent downward grade with the brakes disengaged, due to the resistance in the drive system.

The cask transporter is equipped with a control panel that is suitably positioned on the transporter frame to allow the operator easy access to the controls located on the control panel and, at the same time, allow an unobstructed view of the cask handling operations. The control panel provides for all-weather operation or will be enclosed in the cab. The control panel includes controls for all cask transporter operations including speed control, steering, braking, load raising and lowering, cask restraining, engine control and "dead-man" and emergency stop switches. Additional emergency stop switches are located at ground level both in the front and rear of the transporter.

Figures 4.3-1 through 4.3-3 show the cask transporter (and associated components) performing its required functions. The cask transporter works with certain other ancillary components to facilitate the lifting and movement of the transfer cask and the overpack. Each ancillary component is described in Sections 4.3.2.2 through 4.3.2.8. Lifting of the loaded transfer cask and cask transport frame is accomplished using the transfer cask horizontal lift rig and the transfer cask lift slings. Transfer cask vertical handling, using the cask transporter, is performed using the transfer cask lift links. Likewise, overpack handling is performed only with the overpack in the vertical orientation using the HI-STORM lifting brackets.

The cask transporter and associated lifting components are classified important to safety, purchased commercial grade, and qualified for MPC and overpack transfer operations at the CTF by testing prior to service. These lifting components are defined as those components in the load path of the supported load. Special lifting devices, defined as any suspended load-bearing component below the integral load links, are designed in accordance with ANSI N14.6 (Reference 2) per the applicable guidance of NUREG-0612 (Reference 3). Table 4.3-1 provides a summary of the design code(s) applicable to each of the lifting and handling components.

On top of the main structure of the transporter is a lifting beam supported by two lifting towers that use hydraulic cylinders to provide the lifting force. Mechanical design features and administrative controls provide a defense-in-depth approach to preventing load drops during lifting and handling. The primary load-retaining devices of the cask transporter are the hydraulic cylinders. In combination, the hydraulic system is designed to carry twice the rated load, including a 15 percent hoist load factor, or 2.3 times the rated load (828,000 lb).

Once the cask is raised to its travel height by the cylinders, a redundant load support system is used. This may take the form of either locking pins and/or wedge brakes. Wedge brakes, by their shape, limit tower movement to the lift (up) direction only. Any failure of the lifting hydraulics will not result in an uncontrolled lowering of the load. Locking pins are inserted into each gantry leg to independently support the load when no vertical movement is needed. The wedge brakes are operable at all times when a load is being lifted or lowered. To remove the pins or wedge locks, the cylinder must first be extended slightly to take the load off the pin or wedge. The load may then be lowered using the lifting cylinders. Requiring the cylinders to take the load ensures that they are operational before lowering the load. Any failure of the hydraulic system at this time will be mitigated by the cylinder safety systems as described below.

The cask transporter hydraulic system wedge brake design prevents uncontrolled lowering of the load upon a loss of hydraulic fluid. A minimum amount of hydraulic fluid system pressure is required to disengage the wedge brakes to allow movement of the load. A loss of hydraulic fluid would drop the pressure in the system and engage the wedge brakes, preventing further movement of the load until corrective actions can be implemented.

The cask transporter is used to lift and place the loaded transfer cask atop the overpack for MPC transfer. During the MPC transfer process, the transfer cask trunnion connections to the cask transporter (that is, lift links) must be disconnected to provide access for the MPC downloader. Prior to disconnecting the lift links, the transporter is restrained. The restraint limits movement of the cask transporter during the time the cask transporter is disengaged from the transfer cask trunnions. Section 5.1 of this SAR provides additional detail on storage system operations.

The design of the cask transporter includes a lateral cask restraining system to secure the load during transport operations. The restraint system is designed to prevent lateral and transverse swinging of the load.

4.3.2.1.3 Radiation Protection

The driver of the cask transporter is the only person in proximity to the transfer cask during onsite transfer operations who requires specific radiation protection consideration. Dose rate and accumulated dose estimates for the driver during cask transport operations are included in Section 7.4 using DCPP design-basis spent fuel source terms. All necessary radiation protection measures will be determined by DCPP radiation protection personnel at the time of fuel loading based on the actual dose rates in the immediate vicinity of the loaded transfer cask.

4.3.2.1.4 Functional Testing and Inspection

As part of normal storage system operations, the cask transporter is inspected for operating conditions prior to each ISFSI loading campaign typically consisting of several casks. During the operational testing of this equipment, procedures are followed that will affirm the correct performance of the cask transporter features that provide for safe fuel-handling operations.

4.3.2.2 Transfer Cask Horizontal Lift Rig

The transfer cask horizontal lift rig transmits the load of the lifted transfer cask from the transfer cask lift slings to the cask transporter lift points (Figure 4.3-1). The horizontal lift rig is a rectangular, structural-steel component that includes two attachment points at the top that connect to the cask transporter lift links and four attachment points at the bottom for the transfer cask lift slings. Because the transfer cask horizontal lift rig is designated as a special lifting device in the load path of the transfer cask during lifting and movement between the FHB/AB and the CTF, it is classified important to safety, and is designed in accordance with ANSI N14.6 per the guidance of NUREG-0612, Section 5.1.1.

4.3.2.3 Transfer Cask Lift Slings

The transfer cask lift slings are used to support the weight of the loaded transfer cask and cask transport frame during horizontal lifting by the cask transporter (Figure 4.3-1). Two lift slings are used to support the transfer cask near the top and bottom of the cask. The two ends of each sling are attached to the transfer cask horizontal lift rig. The lifting slings are made from high-strength synthetic material suitable for the load and service conditions. The lifting slings are important to safety and are designed in accordance with ASME B30.9 (Reference 4) per the guidance of NUREG-0612, Section 5.1.1.

4.3.2.4 Cask Transport Frame

The cask transport frame is an L-shaped steel cradle (Figure 4.2-12) used for rotating the transfer cask between the horizontal and vertical orientations (that is, upending and downending) in the receiving/shipping area of the FHB/AB and on the approach pad at the CTF (Figures 4.3-4 through 4.3-6). It is also attached to, but does not support, the transfer cask while the transfer cask is suspended from the transporter in the transfer cask horizontal lift rig during transport between the FHB/AB and the CTF (Figure 4.3-1). The use of the cask transport frame during cask transport operations is described in detail in Section 5.1.

Movement of the loaded transfer cask through the FHB/AB door is performed with the transfer cask and cask transport frame in the horizontal orientation using Hilman-type heavy-load rollers attached to the long side of the cask transport frame. The transfer cask and cask transport frame are rotated down directly onto a temporary length of track that runs from inside the FHB/AB to the access road located outside the FHB/AB roll-up door. The loaded cask transport frame exits the FHB/AB to the east and travels approximately 60 ft to the cask

transporter. The route is level and straight. The roller device travels on a temporary rail system that distributes the load to selected areas of the roadway. The rollers are industrial-grade items that are designed appropriately to support the cask load. Because the cask transport frame is never in the load path for the lifted load, it is classified as not important to safety and is designed in accordance with the AISC Manual of Steel Construction (Reference 5).

4.3.2.5 HI-TRAC Lift Links

The HI-TRAC lift links are load-bearing, structural steel components used to connect the cask transporter lift points to the lifting trunnions on the transfer cask. The HI-TRAC lift links transfer the force of the loaded HI-TRAC transfer cask from the lifting trunnions to the cask transporter lifting points through connector pins. The lift links are important to safety, and are designed in accordance with ANSI N14.6 per the guidance of NUREG-0612, Section 5.1.6.

4.3.2.6 MPC Downloader Slings

The MPC downloader slings are used to lower (or raise) the loaded MPC during MPC transfer operations between the transfer cask and the overpack. The MPC downloader slings transmit the force of the loaded MPC from the MPC lift cleats to the MPC downloader. The MPC downloader slings are important to safety, and are designed in accordance with ASME B30.9 per the guidance of NUREG-0612, Section 5.1.6.

4.3.2.7 MPC Lift Cleats

The MPC lift cleats are ancillary devices temporarily attached to the MPC lid and used during transfer of the loaded MPC between the transfer cask and the overpack. The MPC lift cleats transmit the weight of the loaded MPC to the MPC downloader slings. The MPC lift cleats are classified as important to safety. The MPC lift cleats are special lifting devices that are designed in accordance with ANSI N14.6 per the guidance of NUREG-0612, Section 5.1.6.

4.3.2.8 HI-STORM Lifting Brackets

The HI-STORM lifting brackets (Figure 4.3-3) are load-bearing, structural steel components used to connect the cask transporter lifting points to the lid studs on the overpack. The HI-STORM lifting brackets transfer the weight of the loaded overpack from the lid studs to the cask transporter lift points through connector pins. The HI-STORM lifting brackets are special lifting devices that classified as important to safety, and are designed in accordance with ANSI N14.6 per the guidance of NUREG-0612, Section 5.1.6.

4.3.2.9 HI-STORM Lift Links

The HI-STORM lift links are load-bearing structural steel components used to connect the cask transporter lift points to the HI-STORM lifting brackets. The HI-STORM lift links are used to

retrieve a loaded overpack from the CTF upon loss of the CTF lift system. The lift links are important to safety and are designed in accordance with ANSI N14.6 per the guidance of NUREG-0612, Section 5.1.6.

4.3.3 CASK TRANSPORT ROUTE

The cask transport route between the FHB/AB and the CTF and the Diablo Canyon ISFSI storage pads is shown in Figure 2.1-2. The route begins in the radiological control area (RCA) behind the FHB/AB, extends through the protected area past the Unit 2 cold machine shop (U2 CMS), along Plant View Road near Parking Lot 6, Shore Cliff Road (the main access road), and Patton Cove Bypass (Sections 2.6.1.2, 2.6.1.3.3, and 2.6.1.6.1) and then up along Reservoir Road. The route descends a maximum 8.5 percent grade (for approximately 200 ft) from the RCA to the U-2 CMS and then along Plant View Road, which is essentially flat. From the intersection of Plant View Road and Shore Cliff Road, there begins an approximate 6 percent uphill grade (for approximately 3,600 ft) that continues along Reservoir Road. The route ends with a right-hand turn to the CTF and ISFSI storage pad areas. This route consists of an asphalt roadway, with a 2 percent crown. The transport route is built to AASHTO H-20 and HS-20 pressure ratings, except for the turntables as discussed below. The roadway capacity to withstand the transporter weight has been verified. The underground utilities and structures will be evaluated and temporarily reinforced with steel plates, cribbing, and/or shoring as necessary to withstand the load from the loaded cask transporter. The transporter position on the road will be controlled to ensure an adequate standoff distance is maintained from potential hazards. The following is a discussion of underground utilities along the transport route.

Underground utilities and related valve boxes, pull boxes, catch basins, concrete pipeways, and the retaining wall east of the DCPP Unit 2 CMS are rated for H-20 traffic loads. Administrative controls will be established to preclude the transporter traversing the turntables that are located on the 115-ft Elevation. The turntables, used in the transfer of resin containers from the AB to the radwaste storage building, are only rated for 30 tons. Most pipes and conduits are buried 3 ft deep, except for utilities installed during the plant construction period and ground grid which are shallower, generally 1.5-ft deep. Pipes and conduits are generally nonmetallic, for example, asbestos-cement or polyvinyl chloride (PVC). Firewater line fittings are of ductile or cast iron. Valves are most commonly metallic.

None of the water lines or drains to be crossed are safety related for the 10 CFR 50 power plant. Firewater lines are 10 CFR 50 nonsafety-related, but they are subject to prescribed quality assurance requirements. Radwaste and makeup water lines in the RCA are encased in concrete. 10 CFR 50 safety-related, or nonsafety-related, circuitry passing beneath the route are contained in plastic conduits and are protected by a concrete cap or encasement.

Inside the RCA, the cask transporter will cross: makeup water; radwaste drainage; firewater; storm drains and pipeway drains; hydrogen and nitrogen gas lines in pipeways; electrical,

lighting, and security system conduits and grounding; related concrete pipeways, valve boxes and pullboxes; and embedded rails.

From the Elevation 115-ft bench to the protected area (PA) gate near the Unit 2 CMS, utilities that cross the path include: 12-kV conduits near the road to the main warehouse; a drainage pipeway near the access road to the warehouse; domestic water and sanitary sewer lines near the CMS; and electrical and security conduits near the PA fence.

Along Plant View Road, from the PA to Area 10, and along Shore Cliff Road to Warehouse B, utilities include: PVC domestic water lines and asbestos cement pipe (ACP) raw water lines that run along the edge of the road; shallow steel water lines that cross the road near the south end of Building 201; electrical and telephone lines that run along the other lane; culverts; firewater lines, electrical and telecommunications conduits run from the Area 10 intersection near Warehouse B.

Utilities on Reservoir Road include: an ACP raw water pipeline, a fiberglass seawater reverse osmosis permeate pipeline with combination air valves, and electrical and telecommunications conduits. Abandoned sanitary sewer lines cross the road near the leach field. Culverts cross the road at various locations.

As the transporter ascends the hill along Reservoir Road, it passes beneath the Unit 2 500-kV transmission lines, which are approximately 55 ft above the road surface. To ensure there remains an electrically safe working distance between the transporter and the transmission lines, the maximum height of the lifting beam on the transporter will be administratively controlled in accordance with plant procedures.

4.3.4 DESIGN BASES AND SAFETY ASSURANCE

The design criteria and associated design bases for the transporter are presented in Section 3.3.3. The components of the transportation system in the direct load support path while the load is suspended (lifting points) are considered important to safety. The design and construction of important-to-safety items are conducted under an approved 10 CFR 72 quality assurance program. The design approach to classify certain load path members as important to safety with enhanced safety factors is taken to render all hypothetical transfer cask and overpack drop events outside the FHB/AB not credible. Section 8.2.4 describes this approach in more detail. As a defense-in-depth measure, however, the transportation system design and administrative controls are such that the transfer cask and overpack will be lifted only to those heights necessary for cask handling operations. These transporter design bases and administrative controls are in compliance with 10 CFR 72.128 (a) with regard to ensuring adequate safety under normal and accident conditions.

4.3.5 REFERENCES

1. 10 CFR 72, Licensing Requirements for the Independent Storage of Spent Nuclear Fuel and High-Level Radioactive Waste.

2. ANSI N14.6, Special Lifting Devices for Shipping Containers Weighing 10,000 Pounds (4,500 kg) or More, American National Standards Institute, 1993 Edition.

3. Control of Heavy Loads at Nuclear Power Plants, USNRC NUREG-0612, July 1980.

4. ASME B30.9-1996 through B30.9C-2000 Addenda, Slings, American Society of Mechanical Engineers.

5. Manual of Steel Construction, American Institute of Steel Construction, 9th Edition.

4.4 OPERATING SYSTEMS

4.4.1 LOADING AND UNLOADING SYSTEM

The dry storage cask handling systems are provided to lift, move, handle, and otherwise prepare an MPC loaded with DCPP spent fuel for storage at the Diablo Canyon ISFSI. Equipment is also available to unload an MPC in the unlikely event this becomes necessary. This section provides an overview of the functions and design of the equipment used to deploy the HI-STORM 100 System at the Diablo Canyon ISFSI for normal, off-normal, and accident conditions. Regulatory Guide 3.62 uses the term "emergency conditions." This SAR uses the term "accident conditions" for consistency with more recent regulatory guidance (that is, NUREG-1567). Movement of spent fuel assemblies between the spent fuel racks and the MPC is conducted in accordance with existing plant equipment and procedures, which will be modified, as necessary, to meet handling requirements and commitments as described in the DCPP 10 CFR 50 LAR, and is not specifically addressed here. Chapter 5 provides a detailed operating guidance regarding use of the structures, systems, and components to perform the various cask-handling activities.

Personnel radiation exposures occurring as a result of dry storage operations will be planned and monitored in accordance with the DCPP radiation protection program (Section 7.1).

4.4.1.1 Function

The function of the loading system is to safely accomplish the following major objectives while maintaining occupational doses ALARA:

- Place the empty MPC and HI-TRAC transfer cask into the DCPP SFP using the FHB/AB crane.
- Load the MPC using 10 CFR 50 fuel handling equipment.
- After fuel loading, place the MPC lid and lid retention device on the MPC.
- Remove the loaded MPC and transfer cask from the SFP and place the assemblage down in the cask washdown area in the FHB/AB.
- Remove MPC lid retention device.
- Weld the MPC lid to the MPC shell.
- Helium leak test the MPC.
- Drain, dry, and backfill the MPC with helium.

- Weld the vent and drain port cover plates and closure ring to the MPC lid and shell.
- Install the transfer cask top lid.
- Lift and place the loaded transfer cask onto the cask transport frame.
- Downend the cask transport frame and loaded transfer cask from the vertical to the horizontal position.
- Move the loaded transfer cask out of the FHB/AB horizontally.
- Move the loaded transfer cask from just outside the FHB/AB to the CTF using the cask transporter.
- Pre-stage an empty HI-STORM 100SA overpack for MPC transfer at the CTF.
- Upend the loaded transfer cask to the vertical position and place it atop the empty overpack at the CTF using the cask transporter.
- Transfer the loaded MPC from the transfer cask to the overpack.
- Remove the empty transfer cask and place it in its designated storage area.
- Install the overpack lid.
- Move the loaded overpack to a storage pad using the cask transporter and place it in its designated position.

The same lifting and handling equipment is used in reverse order to return the loaded MPC to the cask washdown area in the FHB/AB in the unlikely event that an MPC needs to be unloaded. Loading and unloading operations are summarized below, including descriptions of the equipment used in performing these operations.

4.4.1.2 Major Components and Operating Characteristics

Detailed operational guidance is provided in Section 5.1. The following discussion provides an overview of the cask loading and unloading operations, including normal, off-normal, and accident conditions.

4.4.1.2.1 Component Arrival and Movement to the Preparation Area

The MPC is a cylindrical, stainless steel pressure vessel containing an internal honeycomb fuel basket that is designed to house the spent fuel assemblies chosen for storage at the Diablo

Canyon ISFSI. The nominal thicknesses of the MPC shell, lid, and baseplate are 1/2 inch, 9-1/2 inches, and 2-1/2 inches, respectively. See Section 4.2.3.2.1 for detailed description of the MPC.

The MPC is shipped to the DCPP site with the fuel basket having been installed at the fabrication facility. Upon arrival at the site, the MPC is removed from the delivery vehicle, receipt inspected, and cleaned, as necessary, prior to being declared ready for installation into the transfer cask. The MPC is upended and removed from its transport frame.

The transfer cask is used to lift and move the MPC located inside it. It is used both before and after the MPC has been loaded with spent fuel assemblies. The transfer cask is designed to provide radiation shielding while maintaining the total weight of the loaded MPC and transfer cask within the load rating of the FHB crane (125 tons). The 125-ton transfer cask design includes a nominal 3/4-inch thick inner shell and a 1-inch thick outer shell, both made of carbon steel. The approximately 4-1/2 inch wide annulus between the inner and outer shells is filled with lead for gamma shielding. A water jacket attached to the outer shell provides a radial dimension of approximately 5.4 inches of water for neutron shielding. The top lid is composed of 2 carbon steel plates with a combined thickness of approximately 1-1/2 inches. Between the plates are 3-1/4 inches of Holtite neutron shielding material. The bottom lid is composed of two carbon steel plates with a combined thickness of approximately 3 inches. Between these plates are 2-1/2 inches of lead. The bottom lid also includes a drain to remove water during preparation activities. The top lid is bolted to allow reuse and has a nominal 27-inch diameter hole in the center. This hole and the bolted connection of the bottom lid allow raising and lowering of the loaded MPC during transfer operations between the overpack and the transfer cask, as described below. The transfer cask is designed for repetitive, transient use to facilitate the movement of the MPC between the overpack and the SFP. All surfaces exposed to the SFP water are coated with coatings compatible with the SFP water chemistry and any uncoated items are compatible with the SFP water chemistry. The Holtec proprietary drawings for the HI-TRAC 125D transfer cask design to be used at the Diablo Canyon ISFSI have been provided to the NRC (Reference 1) and non-proprietary drawings will be included in Section 1.5 of Revision 1 to the HI-STORM 100 System FSAR (Reference 2). Section 4.2.3.4 describes the modified version of the HI-TRAC 125 transfer cask to be used for Diablo Canyon ISFSI operations.

Like the MPC, upon arrival onsite, the transfer cask is removed from the delivery vehicle, inspected, cleaned as necessary, and upended to the vertical position with a lifting device such as a mobile crane. The pool lid is bolted to the bottom flange and the transfer cask is declared ready for use. The transfer cask lid is removed and the empty MPC is lifted and placed inside the transfer cask using the four lift lugs welded to the inside of the shell. The combined empty MPC and transfer cask assemblage is then attached to the cask transport frame, downended to the horizontal orientation and moved into the FHB/AB through the roll-up door on the east side of the building. All of the outdoor lifts of nonfuel bearing components are performed with suitably designed, commercial-grade lifting and rigging equipment or the transporter.

As discussed in the 10 CFR 50 LAR, an auxiliary lift component, custom designed for compatibility with both the DCPP FHB/AB cranes, provide an attachment point for one end of the redundant tension links used during horizontal load movements. A lift yoke, custom designed for compatibility with both the DCPP FHB/AB crane, the transfer-cask lifting trunnions, the redundant tensions links and SFP water chemistry, is used to upright the transfer cask and MPC while in the cask transport frame.

4.4.1.2.2 Cask Preparation and Fuel Loading

Once in the FHB/AB, the transfer cask, with the empty MPC inside, is detached from the cask transport frame, and the transfer cask and MPC are moved to the cask washdown area. While in the FHB/AB, the transfer cask and cask transport frame are restrained to preclude an unanalyzed tip-over. While in the cask washdown area, an impact limiter is attached to the transfer cask using the bolt holes in the outermost bottom flange that were used to attach the bottom of the transfer cask to the cask transport frame (see Figure 4.4-1). The impact limiter is designed to limit cask deceleration to within the design-basis limit of 45 g under a postulated drop event. The cask is then placed on the floor, the lift yoke is disconnected, and the cask is prepared for movement to the SFP.

The annulus between the transfer cask and the MPC is filled with uncontaminated water (borated as necessary to match or exceed the MPC water concentration as described below) and an inflatable annulus seal is installed to prevent contamination of the outer MPC shell while it is submerged in the SFP. The MPC is then filled with water of the proper boron concentration, as required by the Diablo Canyon ISFSI TS. The lift yoke is reconnected and the transfer cask is lifted above the SFP wall, redundant tension links are installed between the crane auxiliary lift component and the yoke, and the lift component is raised slightly until the cask is suspended fully by the links. The cask is then traversed over the SFP wall into position over the cask recess area of the SFP and lowered using the lift component until the lower set of guides on the cask are engaged in corresponding guide channels of the permanent, in-pool, SFP frame structure. The SFP frame provides lateral support to the cask during its vertical load movement in the cask recess area of the spent fuel pool. The frame is a 10 CFR 50 structure described in the further detail in the DCPP 10 CFR 50 LAR supporting dry cask storage. The transfer cask water jacket remains empty to minimize the lifted weight of the cask.

The annulus overpressure system is attached; the cask is raised to remove the tension links and then lowered until resting on the bottom of the cask recess area of the SFP. The annulus overpressure system is a defense-in-depth measure to ensure that any breach of the annulus seal or bottom lid seal will force leakage of clean borated water into the SFP, and not contaminated SFP water into the annulus. The lift yoke is disconnected and the selected fuel assemblies are loaded into the MPC in accordance with plant procedures.

The drain line is attached to the MPC lid and, after fuel loading is complete, the MPC lid and lid restraint system are lowered into position on top of the MPC lift lugs. The lift yoke is

attached to the transfer cask, the cask is lifted out of the SFP, and the annulus overpressure system is disconnected. Before moving laterally beyond the edge of the SFP wall, tension links are reinstalled on the FHB/AB crane from the auxiliary lift component to the yoke, which prevent downward vertical movement of the load. The tension links provide redundant drop protection during lateral crane movement, precluding the need to postulate a drop event between the SFP and the cask washdown area. After arriving above the cask washdown area, the tension links are removed to allow downward vertical load movement.

4.4.1.2.3 MPC and HI-TRAC Preparation for Storage

The loaded transfer cask and MPC are lowered to the cask washdown area inside a seismic restraint structure and the cask is decontaminated. Water is added to the water jacket (this water may be unborated since it is contained within a separate pressure boundary and there is no potential for it to mix with the water in the MPC). The water jacket provides neutron shielding and replaces the shielding lost when the water in the MPC is drained.

The water level in the MPC is lowered slightly, and the MPC lid is welded to the MPC shell using the automated welding system (AWS) augmented by manual welding as necessary. Welding is expected to take three to four passes with liquid-penetrant examinations performed on the root and final passes and after approximately one-half of the total weld thickness is made. The examinations are performed in accordance with the commitments in the HI-STORM 100 System FSAR.

After MPC-lid welding, the water in the MPC is raised again and a hydrostatic test is performed. Upon successful hydrostatic test completion, the MPC is drained of a small amount of water and a helium blanket is applied between the top of the water and the MPC lid. Helium leak testing is performed in accordance with ANSI N14.5-97 (Reference 3) to meet the acceptance criterion defined in SAR Section 10.2 and controlled in the Diablo Canyon ISFSI TS programs. Performance of the helium leak testing at this time allows detection of any leakage through the lid-to-shell weld before the MPC is drained of water. This sequence of activities allows the neutron shielding provided by the water in the MPC to be retained as long as possible in the loading process.

After successful helium leakage testing, the MPC is completely drained of water using the MPC blowdown system. The last of the water is removed via evaporation through the use of a vacuum drying system (as the pressure in the MPC is reduced, the saturation temperature for the water is reduced, causing evaporation of residual water) or through the use of a forced helium dehydration (FHD) system (required for high burnup fuel). The design criteria for the FHD system are provided in Section 10.2. The Diablo Canyon ISFSI TS program controls and SAR Section 10.2 specify the dryness acceptance criteria for both methods of drying. After meeting the drying acceptance criteria, the MPC is backfilled with 99.995 percent pure helium to within a pressure range defined by SAR Section 10.2.

When the MPC has been satisfactorily drained, dried, backfilled with helium, and the lid-to-shell weld has been leak tested, the MPC vent and drain port cover plates are welded on, inspected, and leak tested in accordance with the commitments in the HI-STORM 100 System FSAR, including ANSI N14.5-97. Then, the MPC closure ring is welded in place and inspected in accordance with the commitments in the HI-STORM 100 System FSAR. The inner diameter of the closure ring is welded to the MPC lid and the outer diameter is welded to the top of the MPC shell. The MPC-to-transfer cask annulus may be drained at any time after the MPC has been successfully backfilled with helium.

The MPC lift cleats are attached to the MPC lid, and the MPC is now ready for transfer to storage. The transfer cask top lid is installed. The impact limiter is unbolted from the bottom of the transfer cask and the lift yoke is re-engaged with the transfer-cask-lifting trunnions. The bolts attaching the impact limiter are removed. The FHB crane is used to lift the loaded transfer cask to a height sufficient to detach the impact limiter from the transfer cask, and the crane tension links are installed (the transfer cask remains directly above the impact limiter until the tension links are operable). The seismic restraint system in the cask washdown area is then opened. The height to which the transfer cask is lifted is carefully controlled to be equal to the thickness of the cask transport frame plus a minimal clearance needed to move the cask onto the cask transport frame.

The transfer cask is then moved laterally to the cask transport frame, staged nearby in the upright position. The transfer cask is attached to the cask transport frame and the cask transport frame stabilizer is removed. After the crane tension links are removed, an impact limiter is positioned to protect the loaded transfer cask, and to protect the FHB/AB in case of a crane load-handling equipment failure (see Figure 4.4-2). As the loaded transfer cask and cask transport frame are lowered to just above the impact limiter, the impact limiter is removed from the downending path to allow completion of the downending operation onto the rail dolly for movement outside the FHB/AB. The cask transport frame is moved out of the FHB/AB on rails to a position just outside the FHB/AB door.

4.4.1.2.4 MPC Transfer and Overpack Storage at the ISFSI

Outside the FHB/AB, the loaded transfer cask and cask transport frame are rigged to the cask transporter and moved to the CTF in the horizontal position. These evolutions and the cask transport system design, including associated lifting components, are described in more detail in Sections 4.3 and 5.1. The design of the CTF is discussed in Section 4.4.5.

At the CTF, the empty overpack is prestaged in the subterranean vault with approximately the top 3 ft of the overpack extending above grade level. At this stage of the loading process, the platform is in its full-down position, supported by the CTF base pad supports and fitted with a cask-mating device. When the cask transporter arrives at the CTF, the loaded transfer cask and transport frame are placed on the ground horizontally. The horizontal lift rig is removed and the HI-TRAC lift links are installed on the transporter. The lift links are compatible with the HI-TRAC lifting trunnions and are used to upend the loaded transfer cask out of the

transport frame to the vertical position. Once in the vertical position, the transfer cask is removed from the cask transport frame and the cask transporter moves the transfer cask over to the overpack and places it atop the cask mating device on the overpack.

After the transfer cask is placed atop the overpack, the MPC downloader and MPC lift slings are used to lift the MPC by the lift cleats just enough to take the weight of the MPC off the transfer cask bottom lid. The MPC downloader system is integral to the cask transporter and is located on the bottom flange of the horizontal lift beam of the cask transporter. Once the weight of the loaded MPC is taken off the bottom lid, the bottom lid is unbolted and the cask-mating device is used to remove the lid, creating a clear path between the transfer cask and the overpack. The MPC is then lowered into the overpack using the MPC downloader slings and the slings are lowered onto the top of the MPC. The transfer cask is removed from the top of the overpack and placed out of the way, allowing the downloader slings and MPC lift cleats to be removed. The overpack lid is installed and the overpack is transported to the storage pad using the cask transporter.

4.4.1.2.5 Off-Normal and Accident Conditions

For off-normal and accident conditions, the necessary response is a function of the nature of the event. Chapter 8 of this SAR describes the off-normal and accident events for which the cask system is designed and provides suggested corrective actions. The HI-STORM 100 System is designed to maintain confinement integrity under all design-basis, off-normal, and accident conditions, including natural phenomena and drop events. For Diablo Canyon, the only credible drops are limited to the FHB/AB as described in Sections 4.4.1.3.1 and 4.4.1.3.2. Based on the circumstances of an actual event, plant personnel will take appropriate action ranging from inspections of the affected cask components to movement of the cask back into the SFP and unloading of the spent fuel assemblies.

4.4.1.2.6 Unloading Operations

To unload a HI-STORM 100 System, the loading operations are essentially performed in reverse order, using the same lifting and handling equipment. Once the transfer cask is returned to the cask washdown area in the FHB/AB, the MPC closure ring and vent and drain port cover plates are removed by cutting their attachment welds. Fuel cooldown is performed, if necessary, using the vent and drain and the helium cooldown system until the helium temperature is reduced to the maximum temperature specified in SAR Section 10.2. Helium cooldown is required prior to reflooding the MPC with water (borated as necessary) to prevent flashing of the water and the associated pressure excursions. Once the fuel is sufficiently cool, the MPC is flooded with borated water and the lid weld is removed using the weld removal system. Then, the lid retention system is installed, and the transfer cask and MPC are lowered into the SFP using the lift yoke and FHB crane. Finally, the lid retention system and MPC lid are removed, and the fuel assemblies are transferred from the MPC to the spent fuel racks.

4.4.1.3 Safety Considerations and Controls

The MPC shell is designed in accordance with ASME Section III (Reference 4), Subsection NB and Code Case N-595-1. The MPC fuel basket is designed in accordance with ASME Section III, Subsection NG. As discussed in Reference 4, the MPC is designed to retain its confinement boundary integrity under all normal, off-normal, and accident conditions. The MPC is a fully welded vessel that does not require the use of mechanical seals or leakage monitoring systems. The cask system is completely passive by design and does not require the operability of any supporting systems to safely store the spent nuclear fuel at the ISFSI storage pads. The design features that ensure safe handling of the fuel are described in Section 4.4.1.2 and the ISFSI operations are provided in Section 5.1.

The transfer cask and overpack steel structures are designed in accordance with ASME Section III, Subsection NF with some of the NRC-approved Code exceptions applicable to DCPP (Table 3.4-2). Both the transfer cask and the overpack are designed to withstand the design-basis normal, off-normal, and accident loadings (including natural phenomena) for the Diablo Canyon ISFSI site. The transfer cask design includes shielding design features that keep dose rates ALARA during fuel loading operation and transport of the loaded cask to the storage pads.

The transfer cask shielding is optimized to provide the maximum practicable protection from radiation while staying within the size and weight limits necessary for compatibility with the DCPP facility and the capacity of the FHB/AB crane. Additionally, the design of the transfer cask includes as few pockets and crevices as practicable in the design to minimize the amount of radioactive crud that could be retained in these areas. The paint on the transfer cask is suitable for ready decontamination and removal of loose particles through the use of a standard decontamination practices. The overpack provides the maximum shielding possible while keeping the cask at a reasonable size and weight, compatible with commercially available crawler vehicles. Details of the transfer cask and overpack shielding design features are provided in Chapter 5 of the HI-STORM 100 System FSAR and Section 7.3.1 of this SAR.

4.4.1.3.1 Considerations Inside the 10 CFR 50 Facility

NUREG-0612 provides guidelines to licensees to ensure the safe handling of heavy loads. The guidelines define acceptable alternatives for heavy load movements, which include using a single failure proof handling system or analyzing the effects of a load drop.

Inside the FHB/AB, the cask and any ancillary components are lifted, handled, and moved in accordance with DCPP procedures and the DCPP Control of Heavy Loads Program for lifting heavy loads, as applicable. The FHB/AB crane hoist and auxiliary lift component, as applicable, will be used with a lift yoke to perform all lifts of the cask inside the FHB/AB. The transfer-cask-lifting trunnions and the lift yoke are designed, fabricated, inspected, maintained, and tested in accordance with NUREG-0612 to ensure that structural failures of these items are not credible. PG&E's Control of Heavy Loads Program controls the design of

special lifting devices in accordance with ANSI N14.6 (Reference 5). This program is fully described in DCPP FSAR Update, Section 9.1.4.3.5. The existing FHB/AB crane was not designed and purchased as single-failure proof, as defined in NUREG-0612, Section 5.1.2 (Reference 6). The FHB/AB crane auxiliary lift component is a modification to the crane to provide a single failure proof lift capable of limited vertical travel to facilitate the transition of load support between the crane hoist and the auxiliary lift component. The FHB/AB crane auxiliary lift component is a 10 CFR 50 modification described in further detail in the DCPP 10 CFR 50 LAR to support dry cask storage.

Certain load drops during vertical crane movements have been postulated in the FHB/AB as required by NUREG-0612, Section 5.1.2. Two vertical drops have been analyzed to ensure the consequences of such drops are acceptable and do not cause forces on the cask in excess of its design basis of 45 g under 10 CFR 72. The generic design of the transfer cask has been modified to accommodate a removable (or temporary) impact limiter (see Figure 4.4-1) to meet this acceptance criterion. A temporary impact limiter (see Figure 4.4-2) is also used for the tipover event in the cask washdown area with the cask in the cask transport frame to ensure the consequences of the tipover are acceptable and do not cause deceleration values on the fuel in excess of its design-basis limit. These load drop and tipover analyses are summarized in the DCPP 10 CFR 50 LAR supporting the Diablo Canyon ISFSI project.

Loaded cask drops during the loading operation where only horizontal movement of the lifted load is required are precluded by the use of tension links on the FHB/AB crane auxiliary lift component. Tension links are required for certain horizontal movements to preclude any postulated drop that would cause deceleration forces on the loaded cask in excess of its design basis of 45 g under 10 CFR 72 or apply loads to the 10 CFR 50 structure in excess of their capacity. The tension links are engineered to provide redundant support for the case when large vertical movement of the load is not required. This redundancy provides the requisite temporary, single-failure proof protection during these operations.

4.4.1.3.2 Considerations Outside the 10 CFR 50 Facility

Cask drop events are precluded during transport of the loaded cask from the FHB/AB to the CTF, and from the CTF to the storage pad, through the design of the cask transport system, including the cask transporter (Section 4.3). Drop events are precluded by lift devices designed, fabricated, operated, inspected, maintained, and tested in accordance with NUREG-0612. The cask transport system is designed in accordance with these requirements and appropriate design codes and standards to preclude drop events on the transport route. The cask transporter is also designed to withstand applicable, site-design-basis natural phenomena, such as seismic events and tornadoes, without dropping the load or leaving the transport route. The load-path parts of the cask transporter are designed as specified in Section 4.3.2.1. The cask transporter is procured commercial grade and is qualified by functional testing prior to service for MPC and overpack transfer operations at the CTF. Uncontrolled movement of the cask transporter is prevented by setting the brakes, an emergency stop switch, and a dead-man switch, as discussed in Section 4.3.2.1.2; these

components also are procured commercial grade and are qualified by functional testing prior to service.

Similarly, the CTF is designed, fabricated, inspected, maintained, and tested in accordance with NUREG-0612 to make drop events non-credible.

4.4.2 DECONTAMINATION SYSTEM

Standard decontamination methods will be used to remove surface contamination, to the extent practicable, from the transfer cask and accessible portions of the MPC (that is, the lid) resulting from their submersion in the SFP. The cask and MPC lid will be rinsed with clean borated water while over the SFP. Final decontamination of the transfer cask and MPC lid will be performed in the cask washdown area in the FHB/AB. Decontamination will typically be performed manually. While the entire MPC is submerged in the SFP during fuel loading, the annulus seal and annulus overpressure system prevent contaminated water from coming in contact with the sides of the MPC, leaving the MPC lid as the only exterior surface of the HI-STORM 100 System at the ISFSI storage pad that has been exposed to SFP water.

4.4.3 STORAGE CASK REPAIR AND MAINTENANCE

Chapter 9 of the HI-STORM 100 System FSAR describes the required maintenance for the storage cask system. The HI-STORM 100 System is totally passive by design. There are no active components or monitoring systems required to ensure the performance of its safety functions in the final storage configuration. As a result, only minimal maintenance is required over its lifetime, and this maintenance primarily results from cask handling and weathering effects in storage. Typical of such maintenance is the reapplication of corrosion inhibiting materials on accessible external surfaces. Visual inspection of the overpack inlet and outlet air duct screens is required by the Diablo Canyon ISFSI TS to ensure that they are free from obstruction, including clearing of debris, if necessary.

Repairs and maintenance will be performed by maintenance personnel either in-situ or in another appropriate location, based on the nature of the work to be performed. Radiation protection personnel will provide input to and monitor as necessary these maintenance work activities through the work control process.

4.4.3.1 Structural and Pressure Parts

PG&E anticipates that it will use a cask loading campaign where multiple storage casks are loaded in an essentially continuous work effort. Prior to each transfer cask fuel loading, a visual examination is performed on the transfer-cask-lifting trunnions. The examination consists of inspections for indications of overstress such as cracking, deformation, or wear marks. Repair or replacement is required if unacceptable conditions are identified. The transfer-cask trunnions are maintained and inspected in accordance with ANSI 14.6.

As described in the HI-STORM 100 System FSAR, Chapters 7 and 11, there are no credible normal, off-normal, or accident events that can cause the structural failure of the MPC. Therefore, periodic structural or pressure tests on the MPCs, following the initial acceptance tests, are not required as part of the storage maintenance program.

4.4.3.2 Leakage Tests

There are no seals or gaskets used on the fully welded MPC confinement system. Therefore, confinement boundary leakage testing is not required as part of the storage system maintenance program.

4.4.3.3 Subsystem Maintenance

The HI-STORM 100 System does not include any subsystems that provide auxiliary cooling during loading operations or in its final storage configuration. Normal maintenance and calibration testing is required on the vacuum drying, helium backfill, recirculation and cooldown, and leakage testing systems. Rigging, remote welders, cranes, and lifting beams are inspected prior to each loading campaign to ensure this equipment is ready for service.

4.4.3.4 Pressure Relief Valves

The pressure relief valves used on the water jacket for the transfer cask require calibration on an annual basis (or prior to the next transfer cask use if the period the transfer cask is out of use exceeds 1 year) to ensure the pressure relief setting is within tolerance as controlled by PG&E's DCPP Maintenance Program.

4.4.3.5 Shielding

The gamma and neutron shielding materials in the overpack, transfer cask, and MPC degrade negligibly over time or as a result of usage. Radiation monitoring of the ISFSI provides ongoing evidence and confirmation of shielding integrity and performance. If the monitoring program indicates increased radiation doses, additional surveys of the overpacks will be performed to determine the cause of the increased dose rates.

The Boral panels installed in the MPC baskets are not expected to degrade. The use of Boral as the fixed neutron absorber is discussed in Section 4.2.3.3.5. Therefore, no periodic verification testing of neutron poison material is required on the HI-STORM 100 System.

4.4.3.6 Thermal Performance

In order to ensure that the HI-STORM 100 System continues to provide effective thermal performance during storage operations, surveillance of the passive heat removal system is performed in accordance with the Diablo Canyon ISFSI TS. This involves a periodic inspection to verify that the air duct screens are not blocked.

4.4.4 UTILITY SUPPLIES AND SYSTEMS

Electric power is provided for the CTF lifting platform, CTF and storage-pad-area lighting, and the storage-pad-area security system. As the HI-STORM 100 System is a passive system, no other utilities are required for ISFSI operation.

4.4.4.1 Electrical Systems

Electric power is not required to support functions of the Diablo Canyon ISFSI important-to-safety SSCs. Normal power is supplied from the nonsafety-related 12-kV distribution system for the CTF lifting platform, the CTF, and the storage-pad-area normal lighting. Power for the storage-pad-area security equipment is provided by the DCPP security power system. There are no motorized fans, dampers, louvers, valves, pumps, electronic monitoring systems, and no electrically operated cranes. In the event of a DCPP loss of offsite power, power will not be supplied to the ISFSI components, except for the security loads. A discussion of the normal and emergency power for security equipment is provided in the Physical Security Plan (Section 9.6). Section 8.1.6 describes recovery actions to mitigate this event.

4.4.4.1.1 Normal Power Supplies

The existing DCPP 12-kV distribution system is connected to the DCPP power distribution system in the existing DCPP 12-kV startup buses. Either DCPP Unit 1 or Unit 2 can supply the 12-kV system. The 12-kV underground distribution system is connected to the 12-kV startup bus by existing 3-way switches. The existing 12-kV underground distribution system is routed throughout the DCPP site, including near the location of the CTF and ISFSI storage pad area. A combination of new and existing switches and 12-kV/480-V transformers are used to connect the CTF and ISFSI storage-pad-area loads.

4.4.4.1.2 Grounding

The ISFSI storage pad area, perimeter fencing, lighting and poles, and security equipment will be located below the DCPP Unit 1 500-kV transmission lines. The existing DCPP station-to-switchyard ground grid below the ISFSI location will be maintained. The ISFSI area will be provided with a ground grid, and it will be connected to the station-to-switchyard ground grid. Each storage cask will be grounded to the ISFSI-area ground grid.

4.4.5 CASK TRANSFER FACILITY

The design criteria for the CTF is provided in Section 3.3.4. Holtec CTF drawing 3770 is provided in Figure 4.4-3. The site-specific structural details of the CTF design and analysis for the Diablo Canyon ISFSI are provided in Section 4.2.1.2. The mechanical design aspects are discussed below.

4.4.5.1 CTF Function

The function of the CTF is to facilitate transfer of a loaded MPC between the transfer cask and the overpack. These operations are discussed in Sections 4.4.1.2.4 and 5.1.1.3.

4.4.5.2 CTF Design

Design criteria for the CTF are provided in Section 3.3.4 of this SAR and Section 2.3.3.1 of the HI-STORM 100 System FSAR. The CTF is used in conjunction with the Diablo Canyon cask transporter to permit MPC transfers between the transfer cask and the overpack. The CTF is designed to position an overpack sufficiently below grade where the transfer cask can be mated to the overpack using a cask transporter and a suitably designed mating device. The CTF lifting platform acts as an elevator to raise and lower an overpack. In the full-up position, the overpack base is approximately 40 inches below grade. At the full-down position, the overpack top surface is approximately 30 inches above grade.

The main components of the CTF include the main shell, lifting jacks, drive and control system, and lift platform (Figure 4.4-3). A description of each of these components and the related design criteria are given in Section 3.3.4.

4.4.5.2.1 Lifting Jacks

The jacks are designed to safely raise and lower a fully loaded overpack (180 tons).
The load-bearing structural steel members are designed and fabricated in accordance with Reference 4.

4.4.5.2.2 Mechanical Design Criteria

The design for the cask-lifting platform is based on a dead load of 180 tons.

4.4.5.2.3 Functional/Technical Requirements

The CTF and its components are designed to operate in conjunction with the cask transporter. Together, the cask transporter and the CTF design ensures that there will be no uncontrolled lowering of the lifted load under all design-basis conditions of service, including environmental phenomena.

4.4.5.2.3.1 Main Shell

The CTF main shell supports the jack screws. The cask-lifting platform is raised inside the CTF main shell. As discussed in Sections 4.2.1.2 and 4.4.5.2.3.6, the main shell is equipped with a sump to collect water from the CTF cylinder.

4.4.5.2.3.2 Lifting Platform

The cask-lifting platform is a horizontal, steel-beam structure. Radial stability of the lifting platform is provided by the main shell. Vertical guides or runners are provided to prevent damage of the main shell or lifting platform at the interface locations. These are either wheeled or low friction pads. The guides (or runners) are capable of restraining the lifting platform when applied with the maximum horizontal load from the earthquake applied in two simultaneous orthogonal directions.

The lifting platform is lifted by three, ACME, thread-traveling, nut-type, inverted screw jacks located on the outside edge of the main shell. Raising and lowering of the lifting platform is performed by the simultaneous rotation of the lifting jackscrews. The platform is parked in the up position, with the jackscrews protected from corrosion and dirt by protective boots. The platform bottoms out at the full-down position against the base pad supports to prevent loading of the jacks with the combined weight of the loaded transfer cask and the overpack.

Provisions are provided for personnel access to inspect, maintain, and repair CTF components. Access to the underside of the platform may be via ladder through removable access ports. Access is not allowed if the platform is loaded.

4.4.5.2.3.3 Lifting Jacks

Even loading of the platform is ensured by the simultaneous operation of the lifting jacks. The range of travel of the lifting platform is a minimum of 160 inches. The upper range of travel positions the overpack with its baseplate approximately 30-40 inches below grade. Lift speed is between 6 and 12 inches/minute. The jacks are capable of performing the lift in one continuous motion. The jacks do not require an interim cooling period during the lift. The jacks are designed to preclude unwinding during a loss-of-power event.

4.4.5.2.3.4 Drive and Control System

The cask-lifting platform is operated from a fixed position control station or a pendant. The control station may be located above or below grade as long as reasonable access is provided. The cask-lifting platform drive system ensures coordination of the lifting jacks.

4.4.5.2.3.5 Facility Power

Power for the facility is electric. Power lines are sufficiently protected from interaction with the cask transporter and other operations. Section 8.1.6 describes recovery actions for loss of power to the CTF during operations.

4.4.5.2.3.6 Sump

During periods of nonusage, the CTF will have a cover installed to prevent water entry. To collect any accumulated water, the CTF is equipped with a sump. Any sump water will be collected, sampled for radioactivity, and processed in accordance with applicable administrative procedures.

4.4.5.3 CTF Analysis

The load path parts of the CTF are conservatively designed in accordance with the ASME Code, Section III, Subsection NF. NUREG-0612 was reviewed and the intent of applicable guidance was applied in the design criteria for the load path parts of the CTF. The CTF is purchased commercial grade and is qualified for MPC and overpack transfer operations by functional testing prior to service.

Analyses have been performed to verify that, during MPC transfer from the HI-TRAC to the HI-STORM overpack, the main shell of the CTF and its surrounding foundation are sufficient to maintain the overpack in the vertical position.

All load-bearing components have been evaluated to ensure that they have been sized in compliance with the intent of the applicable sections of ANSI 14.6, NUREG-0612, and ASME Subsection NF.

4.4.5.4 Functional Testing and Inspection

As part of normal storage system operations, the CTF is inspected for operating conditions prior to each ISFSI loading campaign typically consisting of several casks. During the operational testing of this equipment, procedures are followed that will affirm the correct performance of the CTF features that provide for safe fuel-handling operations.

4.4.6 REFERENCES

1. Submittal of Holtec Proprietary Design Drawing Packages, PG&E Letter to the NRC, DIL-01-008, December 21, 2001.

2. Final Safety Analysis Report for the HI-STORM 100 System, Holtec International Report No. HI-2002444, Revision 0, July 2000.

3. ANSI N14.5, Leakage Tests on Packages for Shipment, American National Standards Institute, 1997 Edition.

4. Boiler and Pressure Vessel Code, Section III, Division 1, Subsection NF, American Society of Mechanical Engineers, 1995 Edition including 1996 and 1997 addenda.

5. ANSI N14.6, Special Lifting Devices for Shipping Containers Weighing 10,000 Pounds (4,500 kg) or More, American National Standards Institute, 1993 Edition.

6. Control of Heavy Loads at Nuclear Power Plants, NUREG-0612, USNRC, July 1980.

4.5 CLASSIFICATION OF STRUCTURES, SYSTEMS, AND COMPONENTS

The structures, systems, and components (SSCs) comprising the Diablo Canyon ISFSI are classified as important to safety (ITS) or not important to safety (NITS). The criteria for selecting the classification for particular SSCs are based on the following definitions:

- Important to Safety

  A classification from 10 CFR 72.3 for any SSC whose function is to maintain the conditions required to safely store spent fuel, prevent damage to the spent fuel or spent fuel container during handling and storage, or provide reasonable assurance that spent fuel can be received, handled, packaged, stored, and retrieved without undue risk to the health and safety of the public.

- Not Important to Safety

  A classification for SSCs that do not meet the criteria for classification as ITS.

Major Diablo Canyon ISFSI SSCs are classified as ITS if at least one subcomponent comprising the major component is classified ITS. SSCs classified ITS are subject to the Quality Assurance (QA) Program described in Chapter 11. The importance to safety for each ITS SSC is further refined into three QA classification categories based on the guidance contained in NUREG/CR-6407 (Reference 1). The categories are intended to standardize the QA control applied to activities involving spent fuel storage systems. These classifications are defined as follows:

- Classification Category A – Critical to Safe Operation

  Category A items include SSCs whose failure or malfunction could directly result in a condition adversely affecting public health and safety. The failure of a single item could cause loss of containment leading to release of radioactive material, loss of shielding, or unsafe geometry compromising criticality control.

- Classification Category B – Major Impact on Safety

  Category B items include SSCs whose failure or malfunction could indirectly result in a condition adversely affecting public health and safety. The failure of a Category B item, in conjunction with the failure of an additional item, could result in an unsafe condition.

- Classification Category C – Minor Impact on Safety

  Category C items include SSCs whose failure or malfunction would not significantly reduce the cask system effectiveness and would not be likely to create a situation adversely affecting public health and safety.

The major SSCs that are classified ITS are discussed in the following sections. A safety classification for these SSCs establishes the requirements that satisfy the 10 CFR 72.122(a) general design criteria, which specify that SSCs that are classified ITS be designed, fabricated, erected, and tested to quality standards. The safety classification of the subcomponents and the determination of the ITS category of each item is administratively controlled by PG&E via design and procurement control procedures with input from the storage cask vendor.

Table 4.5-1 lists the safety classification and QA Category for the major SSCs.

4.5.1 SPENT FUEL STORAGE CASK COMPONENTS

The major ITS components comprising the HI-STORM 100 System are described below with a brief description as to why each is classified as ITS. Table 4.5-1 lists the major storage cask components by QA Category, based on the highest QA category of any subcomponent comprising the major component.

4.5.1.1 Multi-Purpose Canister and Fuel Basket

The multi-purpose canister (MPC) is classified ITS because it serves as the primary confinement structure for the fuel assemblies and is designed to remain intact under all normal, off-normal, and accident conditions. The fuel basket inside the MPC is classified ITS, because it ensures the correct geometry of the stored fuel assemblies and provides the fixed neutron absorber between fuel cells to prevent criticality.

4.5.1.2 Damaged Fuel Container

The damaged fuel container (DFC) is classified ITS because it maintains fuel classified as damaged fuel or fuel debris in a safe geometry and enables retrieval of the damaged fuel assembly or fuel debris. The DFC also prevents the gross dispersal of particulates, including loose fuel pellets.

4.5.1.3 Overpack

The overpack is classified ITS because it is designed to remain intact under all normal, off-normal, and accident conditions and serves as the primary component for protecting the MPC during storage. It provides structural protection to prevent damage to the spent fuel and ensures fuel retrievability. It also provides radiation shielding and allows for MPC heat rejection to the environment.

4.5.1.4 HI-TRAC Transfer Cask

The transfer cask is classified ITS because it is designed to support the MPC during transfer and lift operations and to provide structural integrity, missile protection, radiation shielding, and MPC heat rejection during the short time it contains the loaded MPC.

4.5.2 CASK STORAGE PADS

The cask storage pads are classified ITS because they provide the necessary embedment for the anchored overpack to prevent sliding and tipover during a design basis seismic event.

4.5.3 CASK TRANSFER FACILITY

The cask transfer facility (CTF) is classified ITS because the load-bearing components prevent damage to the spent fuel and spent fuel storage cask system components during lifting and MPC transfer operations under all normal, off-normal, and accident conditions. The CTF is designed to prevent an uncontrolled lowering of the load during these operations. The CTF is purchased commercial grade and qualified by functional testing prior to use.

4.5.4 CASK TRANSPORT SYSTEM

The cask transport system is classified ITS because the load-bearing components prevent damage to the spent fuel and spent fuel storage cask system components during transport, lifting, and MPC transfer operations under all normal, off-normal, and accident conditions. The cask transporter "dead-man" and emergency stop features and the setting brakes are classified as ITS. The transport system is designed to prevent uncontrolled lowering of the load. In addition, the cask transporter is designed to maintain stability on the transport route between the FHB/AB and the CTF, and between the CTF and the cask storage pads. The cask transporter is purchased commercial grade and qualified by functional testing prior to use.

4.5.5 ANCILLARY EQUIPMENT

Ancillary equipment is comprised of those SSCs, not described above, that are used to lift, handle, and move the cask and prepare the MPC for storage operations. Table 4.5-1 lists the major ancillary equipment. Any additional ancillary equipment not included on the list will be classified and categorized in accordance with the PG&E design and procurement control procedures with input from the storage cask vendor.

4.5.6 DESIGN CRITERIA FOR SSCs NOT IMPORTANT TO SAFETY

The design criteria for SSCs classified as NITS, but which have security or operational importance, are addressed in other sections of this SAR (for example, security systems, and portions of the cask transport system, CTF, and ancillary equipment systems). These SSCs

are designed in accordance with applicable commercial codes and standards to ensure, where interfaces exist, that there is compatibility with SSCs that are ITS.

The Diablo Canyon ISFSI security system is classified as NITS because it does not have a design function directly related to the protection of public health and safety due to operation of the Diablo Canyon ISFSI. The primary function of the security system is to prevent and detect unauthorized access to the Diablo Canyon ISFSI. The Diablo Canyon ISFSI security system design meets the requirements of 10 CFR 72, Subpart H.

The electrical power system is classified as NITS because it is not ultimately relied upon to support a function necessary for the safe operation of the dry cask storage system. The HI-STORM 100 System is completely passive in design and requires no electric power to ensure safe, long-term storage of the spent nuclear fuel.

Portions of the cask transporter, CTF, and ancillary equipment not having design functions directly related to protecting public health and safety, as defined by the ITS classification categories in Reference 1, are classified as NITS. Major NITS equipment of this type are provided in Table 4.5-1. New equipment and subcomponents of existing equipment not included in Table 4.5-1 will be classified in accordance with the PG&E administrative control process with input from the storage cask vendor.

4.5.7 REFERENCES

1. Classification of Transportation Packaging and Dry Spent Fuel Storage System Components According to Importance to Safety, USNRC, NUREG/CR-6407, February 1996.

4.6 DECOMMISSIONING PLAN

4.6.1 PRELIMINARY DECOMMISSIONING PLAN

Prior to the end of the Diablo Canyon ISFSI life, MPCs loaded with spent fuel will be transferred from storage overpacks into transportation casks and transported offsite. Since the MPCs are designed to meet DOE guidance applicable to MPCs for storage, transport, and disposal of spent fuel, the fuel assemblies will remain sealed in the MPCs such that decontamination of the MPCs is not required. Following shipment of the MPCs offsite, the ISFSI will be decommissioned by identification and removal of any residual radioactive material, and performance of a final radiological survey. Details on decommissioning are provided in the ISFSI License Application, Attachment F, "Preliminary Decommissioning Plan." A brief summary is provided herein.

4.6.2 FEATURES THAT FACILITATE DECONTAMINATION AND DECOMMISSIONING

The design features of the Diablo Canyon ISFSI provide for inherent ease and simplicity of decommissioning the ISFSI in conformance with 10 CFR 72.130. Details on these design features and measures, that will both minimize the potential for contamination and facilitate any required decontamination efforts, are provided in the ISFSI License Application, Attachment F, "Preliminary Decommissioning Plan."

4.6.3 COST OF DECOMMISSIONING AND FUNDING METHOD

10 CFR 72.30(b) requires that the proposed decommissioning plan include a decommissioning cost estimate, a funding plan, and a method of ensuring the availability of decommissioning funds.

The philosophy of operating the Diablo Canyon ISFSI is "start clean/stay clean." Thus, the intention is to maintain the facility free of radiological contamination at all times. During the operational phase of the facility, all radioactive contamination will be removed, if possible, immediately upon its discovery.

Nonetheless, a cost estimate for decommissioning has been done that assumes certain areas and components will require decontamination. As described in the Preliminary Decommissioning Plan, this cost estimate is part of the total estimate performed by TLG Services, Inc., for the DCPP Units 1 and 2. This detailed cost estimate is contained in the PG&E Decommissioning Funding Report to the NRC (Reference 1), as required by 10 CFR 50.75(f)(1). As shown therein, it is estimated that decommissioning the Diablo Canyon ISFSI will cost about $12.5 million when escalated to 2001 dollars – for the DECON alternative. The estimate of $12.5 million only covers the costs for decontamination and disposal of low-level waste; it does not cover the costs for demolition and disposal of noncontaminated material, which are estimated at $6.5 million in 2001 dollars.

In developing this estimate, TLG Services had to make some default assumptions regarding the spent fuel storage system and the size of the ISFSI due to PG&E having not yet selected the storage system vendor. TLG Services assumed "NUHOMS" storage casks would be used. The TLG Services' cost estimate will be updated to reflect the Holtec International HI-STORM 100 System. This update will be contained in the applicable biennial PG&E Decommissioning Funding Report to the NRC; thereafter, the Preliminary Decommissioning Plan and this SAR will be updated accordingly.

PG&E has established an external sinking trust fund account for decommissioning DCPP Units 1 and 2. As discussed in the Preliminary Decommissioning Plan and the Decommissioning Funding Report to the NRC (Reference 1), this account contains designated monies for decommissioning the Diablo Canyon ISFSI.

4.6.4 LONG-TERM LAND USE AND IRREVERSIBLE COMMITMENT OF RESOURCES

Following removal of all storage casks from the ISFSI and decontamination of the storage pads and the CTF, as necessary, these structures and associated areas can be released for unrestricted use.

The security-related structures and the CTF could be dismantled and removed. The concrete storage pads and the concrete floor of the CTF could be sectioned and removed, or alternatively left in place. In either case, the storage pads and CTF areas could be covered with top soil and replanted with native vegetation; thus, returning the land to its original condition.

The long-term plan will be addressed further in the final decommissioning plan that will be submitted prior to ISFSI license termination.

4.6.5 RECORDKEEPING FOR DECOMMISSIONING

Records important to decommissioning, as required by 10 CFR 72.30(d), will be maintained until the ISFSI is released for unrestricted use. See Section 3.0 of the ISFSI License Application, Attachment F, "Preliminary Decommissioning Plan," for the type of records that will be maintained. These records will be maintained at DCPP as part of the records management system.

4.6.6 REFERENCES

1. Decommissioning Funding Reports for Diablo Canyon Power Plant Units 1 and 2 and Humboldt Bay Power Plant, PG&E Letters DCL-01-026 and HBL-01-005 to the NRC, March 30, 2001.

TABLE 4.2-1

PHYSICAL CHARACTERISTICS OF THE HI-STORM MPC[a]

PARAMETER	NOMINAL VALUE
Outside Diameter	68 inches
Length	191 inches
Maximum Heat Load (Intact Fuel)	27.8 kW for MPC-24 28.2 kW for MPC-24E and MPC-24EF 28.7 kW for MPC-32
Maximum Heat Load (Damaged fuel or fuel debris)	26.8 kW for MPC-24E 26.8 kW for MPC-24EF
Material of Construction	Stainless Steel (except neutron absorber and aluminum washer in vent and drain ports)
Maximum Weight with Fuel	79,987 lb for MPC-24 82,389 lb for MPC-24E & MPC-24EF 88,135 lb for MPC-32
Internal Atmosphere	Helium

[a] Data taken from the HI-STORM 100 System design drawings and Chapter 2 of the HI-STORM 100 System FSAR, as amended by LAR 1014-1.

TABLE 4.2-2

PHYSICAL CHARACTERISTICS OF THE
HI-STORM 100SA OVERPACK[a]

PARAMETER	VALUE
Height	231-1/4 inches
Outside Diameter	146-1/2 inches (bottom baseplate)
Capacity	One loaded MPC
Material of Construction	Concrete (lid and side shielding) Carbon steel (lid and shell structure)
Maximum Weight[b]	334,410 lb with loaded MPC-24 336,812 lb with loaded MPC-24E and MPC-24EF 342,558 lb with loaded MPC-32
Design Life	40 years

[a] Data taken from the HI-STORM 100 System design drawings and Chapter 2 of the HI-STORM 100 System FSAR, as amended by LAR 1014-1.
[b] Maximum weights include an additional 2,000 lb for anchorage hardware.

TABLE 4.2-3

PHYSICAL CHARACTERISTICS OF THE
HI-TRAC 125D TRANSFER CASK[a]

PARAMETER	VALUE
Height	196 inches (including top lid)
Outside Diameter	94-5/8 inches
Capacity	One loaded MPC
Material of Construction	Steel (shells, baseplate, lids, water jacket, bolting hardware) Lead (between inner and outer shells) Holtite-A (inside top lid)
Maximum Weight	246,681 lb, including loaded MPC-32 and top lid
Design Life	40 years

[a] Data taken from the HI-TRAC 125 D drawing and Chapter 2 of the HI-STORM 100 System FSAR as amended by LAR 1014-1.

TABLE 4.2-4

SUMMARY OF MPC-32 MPC CAVITY PRESSURES[a]
FOR NORMAL CONDITIONS

Condition	Pressure (psig)
Initial Backfill (at 70°F)	31.3
Normal Condition with no rod rupture	65.6
Normal Condition with 1% rods ruptured (storage)	66.6
Normal Condition with 1% rods ruptured (transport)	77.2

[a] Per NUREG-1536, pressure analyses with ruptured fuel rods (including BPRAs) is performed with release of 100% of the ruptured fuel rod fill gas and 30% of the significant radioactive gaseous fission products.

TABLE 4.2-5

DIABLO CANYON ISFSI COMPLIANCE WITH
GENERAL DESIGN CRITERIA (10 CFR 72, SUBPART F)

10 CFR 72 REQUIREMENT	REQUIREMENT SUMMARY	SAR SECTION WHERE COMPLIANCE IS DEMONSTRATED
72.122 (a) Quality standards	Structures, systems, and components (SSCs) important to safety must be designed, fabricated, erected, and tested to quality standards commensurate with the importance to safety of the function.	• Section 4.5 provides the classification for SSCs important to safety. • Chapter 4 describes the ISFSI design features of SSCs that are important to safety. • HI-STORM 100 SYSTEM FSAR Tables 2.2.6 and 8.1.6 provide the safety classifications of cask and ancillary components, respectively. • Chapter 11 describes the Diablo Canyon ISFSI QA Program
72.122 (b) Protection against environmental conditions and natural phenomena	SSCs important to safety must be designed to accommodate the effects of and be compatible with site characteristics and environmental conditions and to withstand postulated accidents.	• Section 3.2 provides the design bases and criteria for environmental conditions and natural phenomena for the Diablo Canyon ISFSI. • Section 4.2 describes the design for the ISFSI pads, cask anchor studs, and cask structure for normal, off-normal and accident conditions, and environmental conditions and natural phenomena. • Section 3.3 describes the design criteria for the cask transporter ISFSI pad, cask transfer facility(CTF), and ISFSI pad. • Section 4.2 describes the design of the ISFSI concrete storage pad and CTF. • Section 4.3 describes the design for the cask transport system. • HI-STORM FSAR Chapters 3 and 11 describe the details of the cask design, including normal, off-normal, and accident conditions of storage.

TABLE 4.2-5

10 CFR 72 REQUIREMENT	REQUIREMENT SUMMARY	SAR SECTION WHERE COMPLIANCE IS DEMONSTRATED
72.122 (c) Protection against fires and explosions	SSCs important to safety must be designed and located so that they can continue to perform their safety functions under credible fire and explosion exposure conditions.	• Section 3.3.1.6 describes the fire and explosion protection design criteria. • Sections 4.2.3.3.2.9 and 4.2.3.3.2.10 discuss cask design features as they relate to the capability of the cask system to withstand explosions and fires. • Sections 8.2.5 and 8.2.6 describe the evaluations and analyses related to fires and explosions.
72.122 (d) Sharing of SSCs	SSCs important to safety must not be shared between the ISFSI and other facilities unless it is shown that such sharing will not impair the capability of either facility to perform its safety functions.	• Section 1.2 discusses the shared SSCs between the Diablo Canyon ISFSI and DCPP. No safety-related services are shared.
72.122 (e) Proximity of sites	An ISFSI located near other nuclear facilities must be designed and operated to ensure that the cumulative effects of their combined operations will not constitute an unreasonable risk to the health and safety of the public.	• Sections 2.1 and 4.1 discuss the location and layout of the Diablo Canyon ISFSI. • Chapter 7 discusses the combined radiation doses to the public from the concurrent operation of the ISFSI and DCPP.
72.122 (f) Testing and maintenance of systems and components	Systems and components that are important to safety must be designed to permit inspection, maintenance, and testing.	• Section 3.3.1.5.1 describes the expected need for access to the ISFSI to conduct maintenance and inspection activities. • Section 4.2 describes the design features of the ISFSI that accommodate inspection, maintenance, and testing. • Chapter 9 of the HI-STORM FSAR describes the limited amount of maintenance expected to be required for the cask system.
72.122 (g) Emergency capability	SSCs important to safety must be designed for emergencies. The design must provide accessibility to the equipment by onsite and available offsite emergency facilities and services.	• Section 1.2 describes how the Diablo Canyon ISFSI is designed for accessibility during emergencies. • Section 9.5 summarizes the Emergency Plan for the ISFSI.

TABLE 4.2-5

10 CFR 72 REQUIREMENT	REQUIREMENT SUMMARY	SAR SECTION WHERE COMPLIANCE IS DEMONSTRATED
72.122 (h) Confinement barriers and systems	The spent fuel cladding must be protected during storage against degradation that leads to gross ruptures or the fuel must be otherwise confined. Ventilation systems must be provided, where necessary, to ensure confinement of airborne particulates. Periodic monitoring is sufficient, consistent with cask design requirements.	• Section 3.3.1.2.1 describes the HI-STORM 100 System confinement barriers and systems. • Sections 3.3.1.5.3, 3.3.1.7.2, 7.3.3, and 7.7 discuss the absence of radioactive effluents from the HI-STORM 100 System, which eliminates the need for ventilation systems. • Section 4.2.3.3.6 describes how the design of the HI-STORM 100 System maintains confinement integrity under all normal, off-normal, and accident conditions of storage. • Chapter 3 of the HI-STORM 100 SYSTEM FSAR describes the structural evaluations performed to demonstrate confinement integrity under all conditions of storage. • The Diablo Canyon ISFSI Technical Specifications include a surveillance requirement to periodically monitor the passive heat removal system for operability.
72.122 (i) Instrumentation and control systems	Instrumentation and control systems must be provided in accordance with cask design requirements to monitor normal, off-normal, and accident conditions.	• Section 3.3.1.3.2 discusses the fact that the HI-STORM 100 System requires no instrumentation for normal or off-normal operation or for accidents.
72.122 (j) Control room or control area	A control room or control area, if appropriate, must be designed to permit occupancy and actions to be taken to monitor the ISFSI safely under normal conditions, and to provide safe control of the ISFSI under off-normal or accident conditions.	• Section 3.3.1.5.1 discusses why access to the ISFSI may periodically be required. • Section 5.2 discusses why a dedicated ISFSI control room/area is not required. • The ISFSI Physical Security Plan provides the details for ISFSI access control. Section 9.6 provides a brief non-safeguards summary.
72.122 (k) Utility or other services	Each utility service system must be designed to meet emergency conditions. The design of utility services and distribution systems that are important to safety must include redundant	• Section 1.2 discusses shared utility services between the ISFSI and DCPP. No safety-related services are shared. • Section 4.4.4 discusses utilities required for operation of the CTF. Power supplies for the CTF are provided from a non-safety related

TABLE 4.2-5

10 CFR 72 REQUIREMENT	REQUIREMENT SUMMARY	SAR SECTION WHERE COMPLIANCE IS DEMONSTRATED
	systems to maintain the ability to perform safety functions assuming a single failure. An ISFSI located on the site of another facility may share common utilities and services provided the sharing or physical connection does not significantly increase the probability or consequences of an accident or malfunctions of equipment important to safety; or reduce the margin of safety as defined in the technical specification bases for either facility.	power distribution system. • Section 8.1.6 discusses the evaluation of a loss of electrical power to the Diablo Canyon ISFSI.
72.122 (l) Retreivability	Storage systems must be designed to allow ready retrieval of spent fuel for further processing or disposal.	• Section 5.1 discusses unloading of the HI-STORM 100 System and ready fuel retrievability for return to the DCPP spent fuel pool.
72.124 (a) Design for criticality safety	Spent fuel handling, packaging, transfer, and storage systems must be designed to be maintained subcritical.	• Sections 3.3.1.4, 3.3.1.7, and 4.2.3.3.5 summarize the design features and administrative controls used to ensure subcriticality of the spent fuel is maintained during all phases of fuel loading, cask preparation, and storage. • Chapter 6 of the HI-STORM 100 System FSAR provides a detailed discussion of the criticality analyses for the system.
72.124 (b) Methods of criticality control	When practicable, the design of an ISFSI must be based on favorable geometry, permanently fixed neutron absorbing materials (poisons), or both. The continued efficacy of the neutron absorbing material may be confirmed by demonstration or analysis before use, showing significant degradation over the life of the facility cannot occur.	• Sections 3.3.1.4 and 4.2.3.3.5 discuss the combination of geometry and fixed neutron poisons as the means of subcriticality control. • Section 6.3.2 of the HI-STORM 100 System FSAR describes the Boral neutron absorber used in the Holtec MPCs and provides information showing that significant degradation over the life of the facility will not occur and verification of continued efficacy is not required.
72.124 (c)	A criticality monitoring system shall be	• Section 4.2.3.3.5 discusses a 10 CFR 50 LAR on criticality

TABLE 4.2-5

10 CFR 72 REQUIREMENT	REQUIREMENT SUMMARY	SAR SECTION WHERE COMPLIANCE IS DEMONSTRATED
Criticality monitoring	maintained in each area where special nuclear material (SNM) is handled, used, or stored which will energize clearly audible alarm signals if accidental criticality occurs. Monitoring of dry storage areas where SNM is packaged in its stored configuration under a 10 CFR 72 license is not required.	monitoring exemption based on compliance with GDC 63.
72.126 (a) Exposure control	Radiation protection systems must be provided for all areas and operations where onsite personnel may be exposed to radiation or airborne radioactive materials.	• Section 3.3.1.5 provides the radiological protection design criteria and the key cask system components relied upon for shielding. • Chapter 7 discusses the radiation protection program.
72.126 (b) Radiological alarm systems	Radiological alarm systems must be provided in accessible work areas as appropriate to warn operating personnel of radiation and airborne radioactive material concentrations above a given set point and of concentrations of radioactive material in effluents above control limits.	• Section 3.3.1.5.3 discusses the requirements for radiological alarm systems. • Section 7.3.4 describes the radiological monitoring program.
72.126 (c) Effluent and direct radiation monitoring	As appropriate for the handling and storage system, means to measure effluents must be provided for normal and accident conditions. Areas containing radioactive materials must be provided with systems for measuring the direct radiation levels in and around these areas.	• Solid, Section 3.3.1.5.3 describes how the HI-STORM 100 System emits no solid gaseous, or liquid effluents under normal or off-normal conditions of storage. • Section 4.2.3.3.6 describes how confinement integrity is maintained under normal, off-normal, and accident conditions. • Section 7.3.4 describes the radiological monitoring program.
72.126 (d) Effluent control	The ISFSI must be designed to provide means to limit to ALARA levels, the release of radioactive materials in effluents during normal	• Section 3.3.1.5.3 describes how the HI-STORM 100 System emits no gaseous or liquid effluents under normal or off-normal conditions of storage.

TABLE 4.2-5

10 CFR 72 REQUIREMENT	REQUIREMENT SUMMARY	SAR SECTION WHERE COMPLIANCE IS DEMONSTRATED
	operations and control the release of radioactive materials in effluents under normal conditions and to control the release of radioactive materials under accident conditions.	• Section 4.2.3.3.6 describes how confinement integrity is maintained under normal, off-normal, and accident conditions. • Section 7.5 provides discussion of the doses to the public from a hypothetical leak in the confinement boundary during normal, off-normal, and accident conditions. All doses are shown to be within regulatory limits.
72.128 (a) Spent fuel storage and handling systems	Spent fuel storage and other systems that might contain or handle radioactive materials associated with spent fuel must be designed to ensure adequate safety under normal and accident conditions.	• Section 4.2 describes the design of SSCs that contain or handle radioactive material for normal and accident conditions.
72.128 (b) Waste treatment	Radioactive waste treatment facilities must be provided.	• Sections 3.3.1.5.3, 3.3.1.7.2, 7.3.3, and 7.7 discuss how no radioactive waste is produced by the HI-STORM 100 System. • Sections 4.4.2 and 6.2 describes the decontamination process during loading operations and the treatment of and waste that is created.
72.130 Criteria for decommissioning	The ISFSI must be designed for decommissioning. Provisions must be made to facilitate decontamination of structures and equipment, minimize the quantity of radioactive wastes and contaminated equipment, and facilitate the removal of radioactive waste at the time of decommissioning.	• Section 4.6 summarizes the ISFSI preliminary decommissioning plan. • Section 2.4 of the HI-STORM 100 System FSAR describes the cask design features as they relate to decommissioning. • The Preliminary Decommissioning Plan (License Application, Attachment F) presents an overall description of the decommissioning requirements.

TABLE 4.3-1

IMPORTANT-TO-SAFETY COMPONENTS OF THE CASK TRANSPORTATION SYSTEM

Component	Function	Applicable Design Codes
Cask Transporter	Lift, handle, and transport a loaded HI-TRAC transfer cask or a HI-STORM 100SA overpack	Purchased commercial grade and tested prior to use in accordance with NUREG-0612
Transfer Cask Horizontal Lift Rig	Transmit the force of the lifted load to the cask transporter lift points from the transfer cask lift slings	ANSI N14.6 per NUREG-0612, Section 5.1.1
Transfer Cask Lift Slings	Transmit the force of the lifted transfer cask to the transfer cask horizontal lift rig devices during horizontal lifts.	ASME B30.9 Purchased commercial grade and tested prior to use in accordance with NUREG-0612
HI-TRAC Lift Links	Transmit the force of the lifted load from the transfer cask lifting trunnions to the cask transporter lift points during upending and vertical lifts	ANSI N14.6 per NUREG-0612, Section 5.1.6
MPC Downloader Slings	Transmit the force of the loaded MPC from the MPC lift cleats to the MPC downloader	ASME B30.9 Purchased commercial grade and tested prior to use in accordance with NUREG-0612
MPC Lift Cleats	Provide a lift point for raising and lowering the loaded MPC between the transfer cask and overpack	ANSI N14.6 per NUREG-0612, Section 5.1.6
HI-STORM Lifting Brackets	Transmit the force of the lifted load from the overpack lid studs to the cask transporter lift points during vertical lifts	ANSI N14.6 per NUREG-0612, Section 5.1.6
Connector Pins	Connect the transfer cask lift links or the overpack lifting brackets to the cask transporter lift links	ANSI N14.6 per NUREG-0612, Section 5.1.6
HI-STORM Lift Links	Transfer the force of the lifted load from the HI-STORM lifting brackets to the cask transporter lift points during vertical lifts under off-normal or accident conditions with a loaded overpack in the CTF.	ANSI N14.6 per NUREG-0612 Section 5.1.6

TABLE 4.5-1

QUALITY ASSURANCE CLASSIFICATION OF
MAJOR STRUCTURES, SYSTEMS, AND COMPONENTS

IMPORTANT TO SAFETY[a]	NOT IMPORTANT TO SAFETY
Classification Category A	
Multi-Purpose Canister	Security Systems
Fuel Basket	Fencing
Damaged Fuel Container	Lighting
Transfer Cask	Electrical Power
MPC Lift Cleats	Communications Systems
MPC Downloader Slings[b]	Automated Welding System (AWS)
Transfer Cask Impact Limiters	MPC Helium Backfill System
HI-STORM Lifting Brackets	MPC Forced Helium Dehydration System
HI-STORM Mating Device Bolts and Shielding Frame	MPC Vacuum Drying System
Cask Transporter[b]	
Lateral Restraints[b] (HI-TRAC and transporter at CTF)	
HI-STORM Lift Links	
Transfer Cask Lift Links	
Classification Category B	
HI-STORM Overpack	
ISFSI Storage Pads	
Overpack Anchorage Hardware	
CTF (except jacks)	
CTF Jacks[b]	
Transfer Cask Horizontal Lift Rig	
Transfer Cask Lift Slings[b]	
Upper and Lower Fuel Spacer Columns and End Plates	
Transporter Connector Pins	
Helium Fill Gas[b]	
Classification Category C	
HI-STORM Cask Mating Device (except bolts and shielding frame)	

(a) Major cask system components are listed according to the highest QA category of any subcomponent comprising the major component. The safety classification of the subcomponents and the determination of the ITS category of each item is administratively controlled by PG&E via design and procurement control procedures with input from the storage cask vendor.

(b) Purchased commercial grade and qualified by testing prior to use.

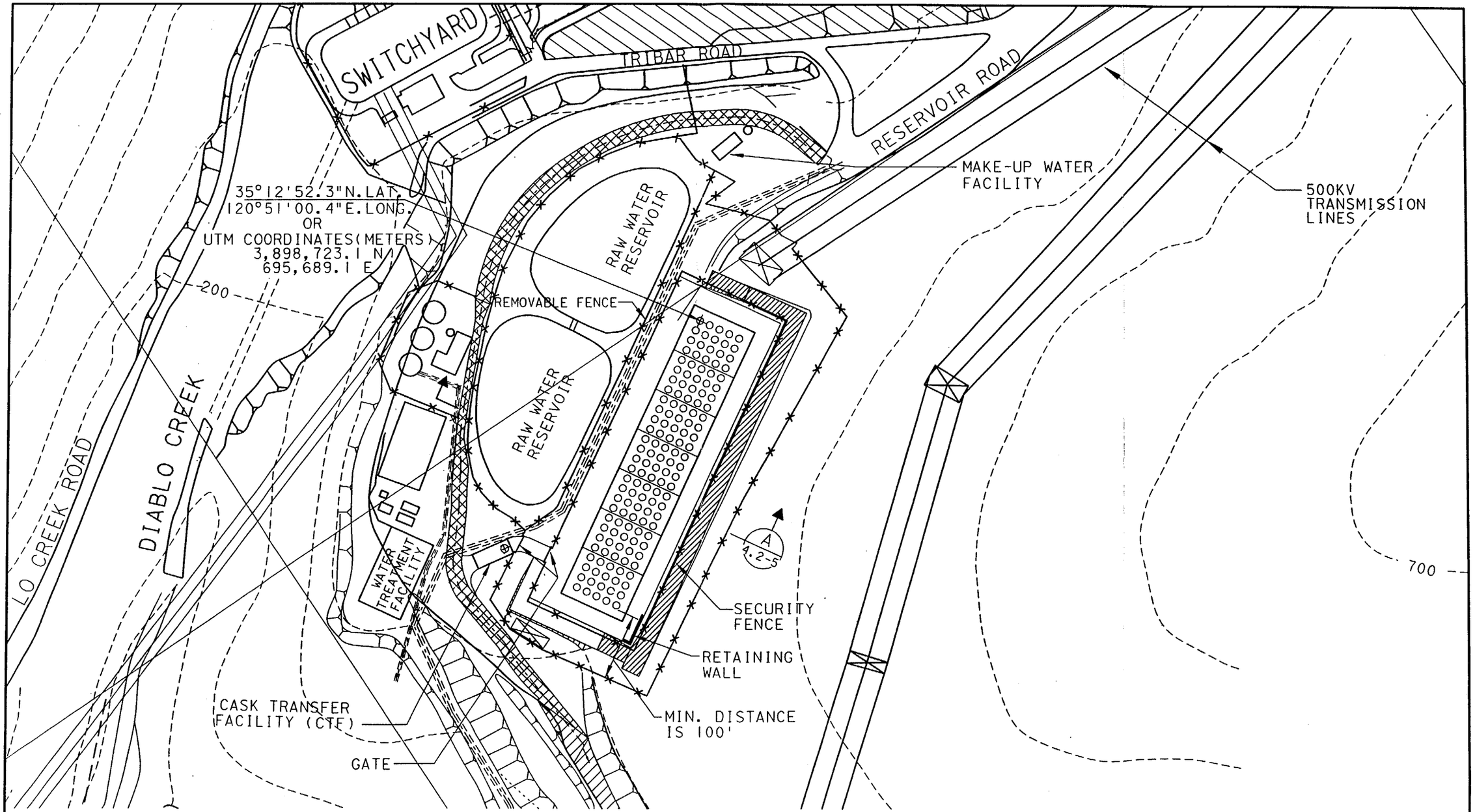

SAFETY ANALYSIS REPORT

DIABLO CANYON ISFSI

FIGURE 4.1-1
STORAGE LAYOUT

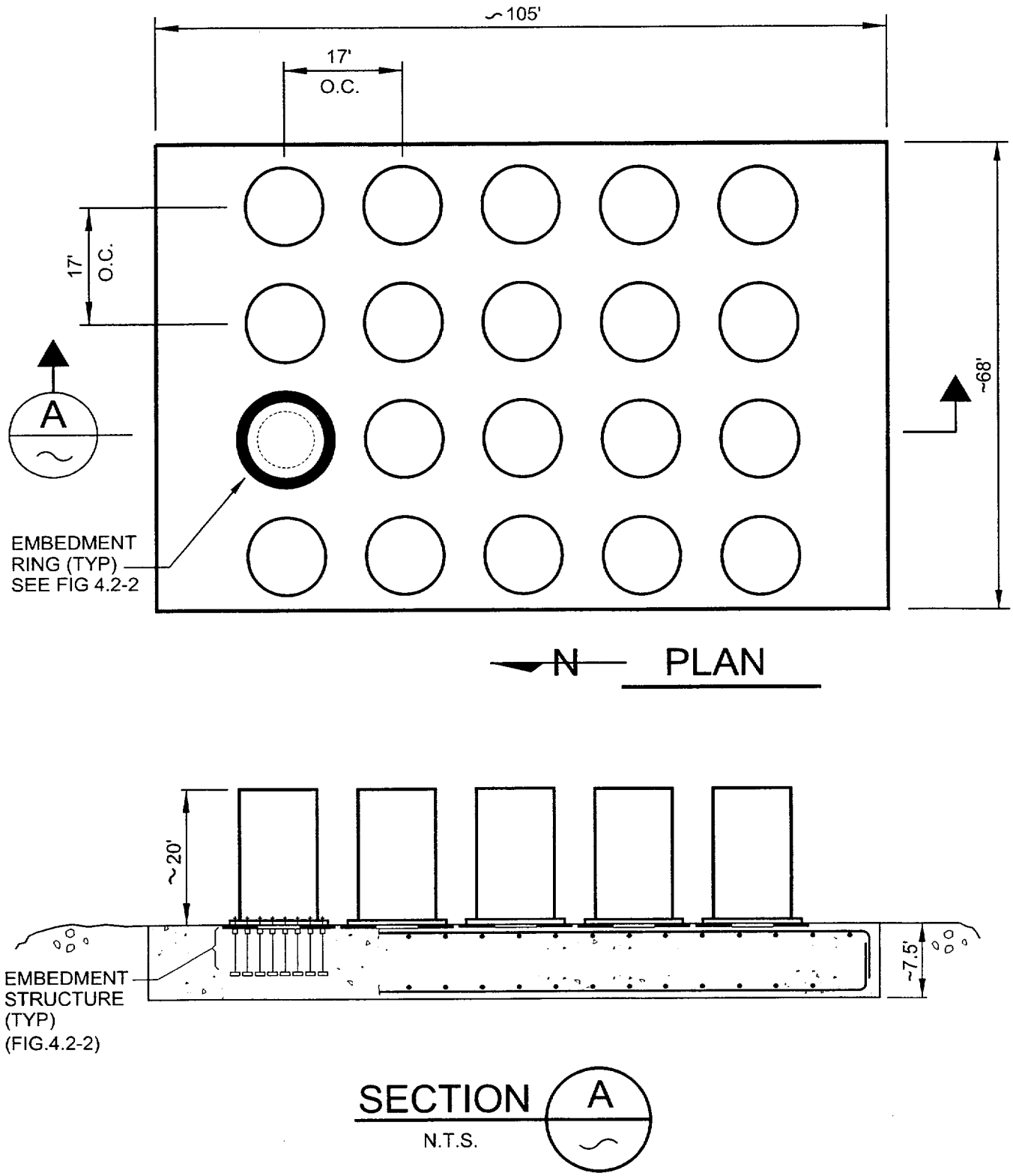

SAFETY ANALYSIS REPORT
DIABLO CANYON ISFSI
FIGURE 4.2-1 TYPICAL CASK STORAGE PAD (SCHEMATIC)

NOTE:
ALL DIMENSIONS SHOULD BE VIEWED AS APPROXIMATE NUMBERS.

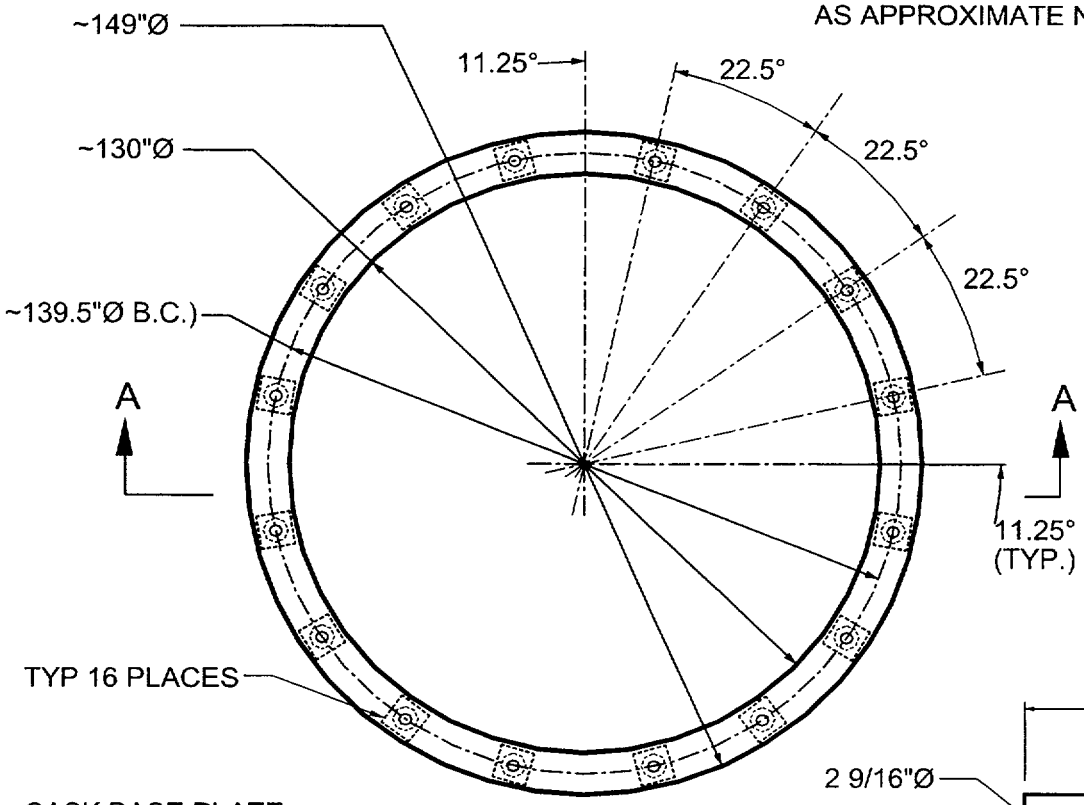

EMBEDMENT PLATE
PLAN VIEW

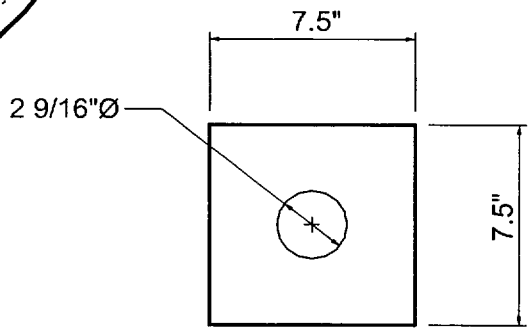

DETAIL D

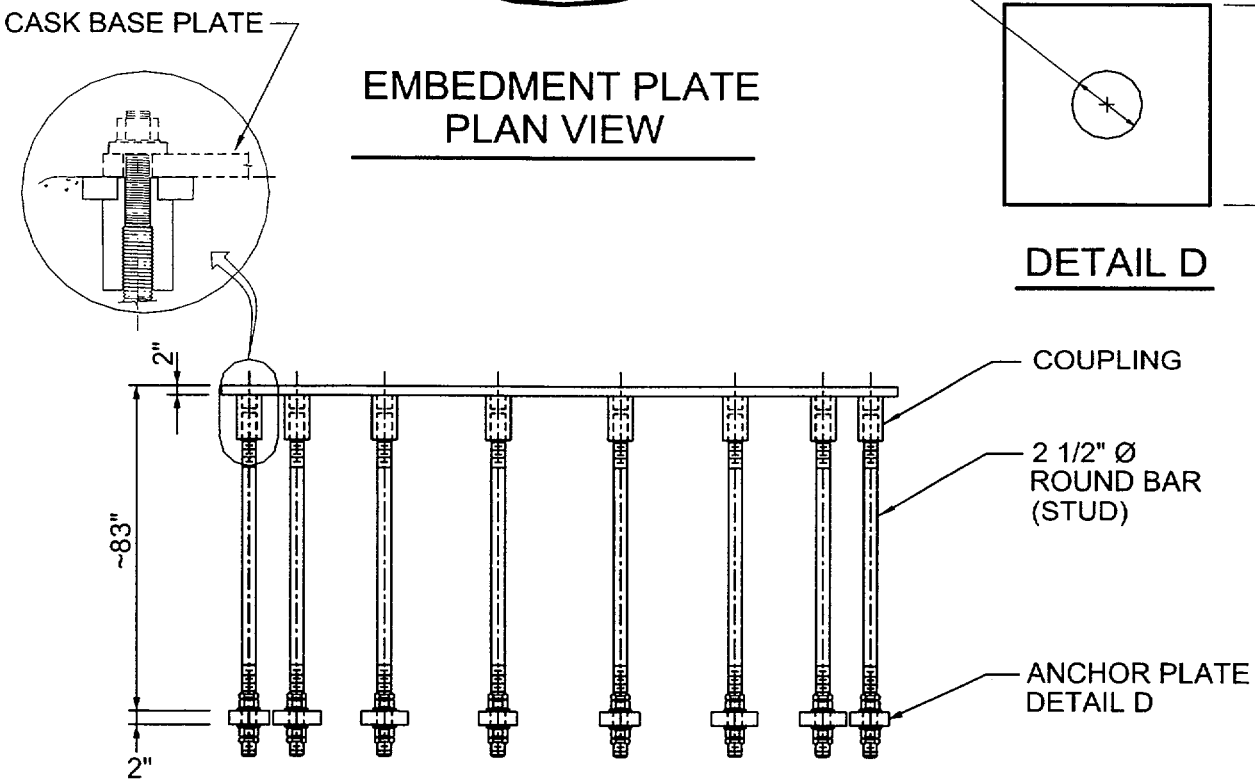

SECTION A-A

SAFETY ANALYSIS REPORT
DIABLO CANYON ISFSI
FIGURE 4.2-2 EMBEDMENT ANCHORAGE STRUCTURE

0NPG2ND

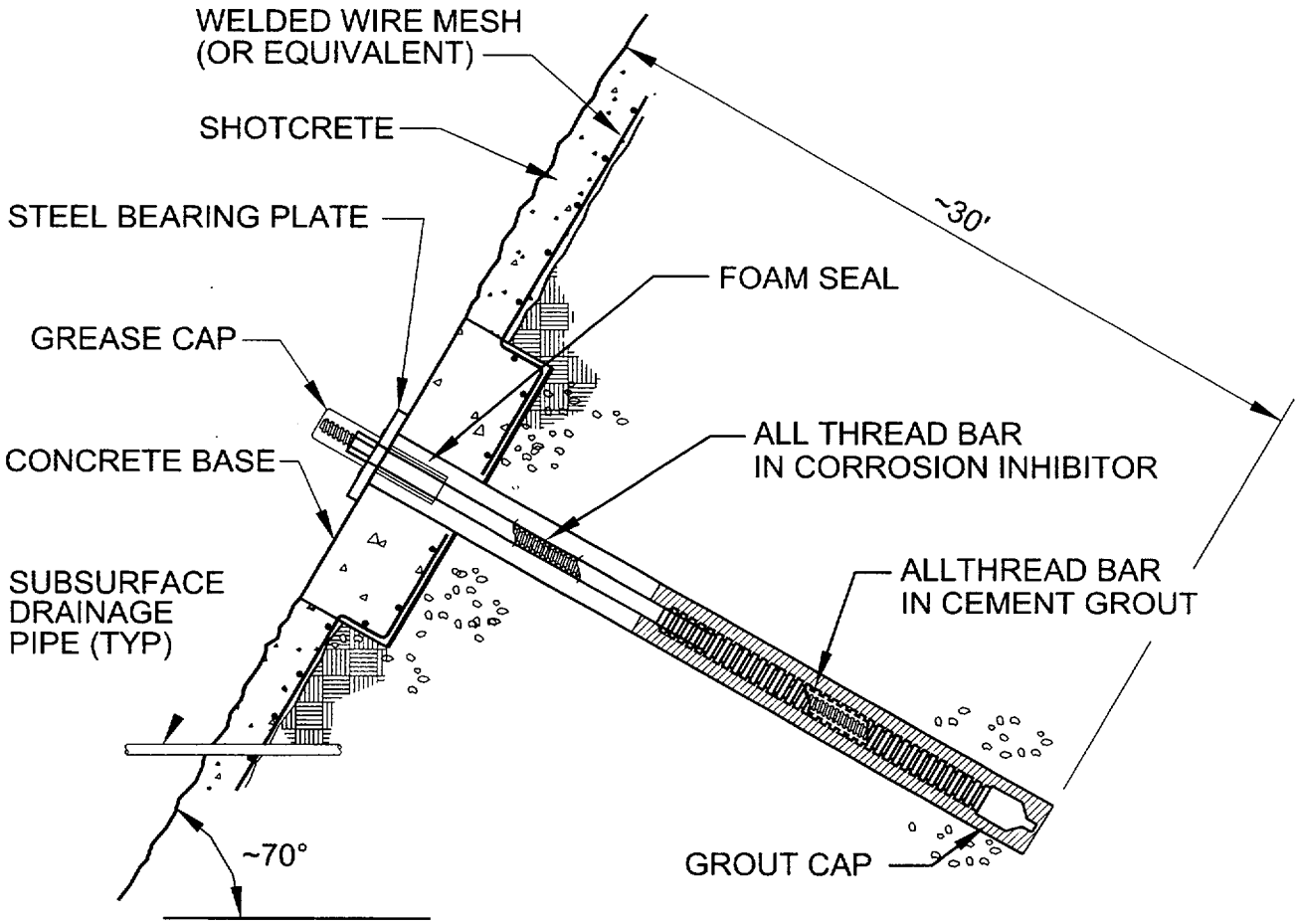

TYPICAL ROCK ANCHOR DETAIL

(FOR CUT SLOPE STABILITY)
(NOT TO SCALE)

SAFETY ANALYSIS REPORT
DIABLO CANYON ISFSI
FIGURE 4.2-3 TYPICAL ROCK ANCHOR DETAIL

0NPG2ND

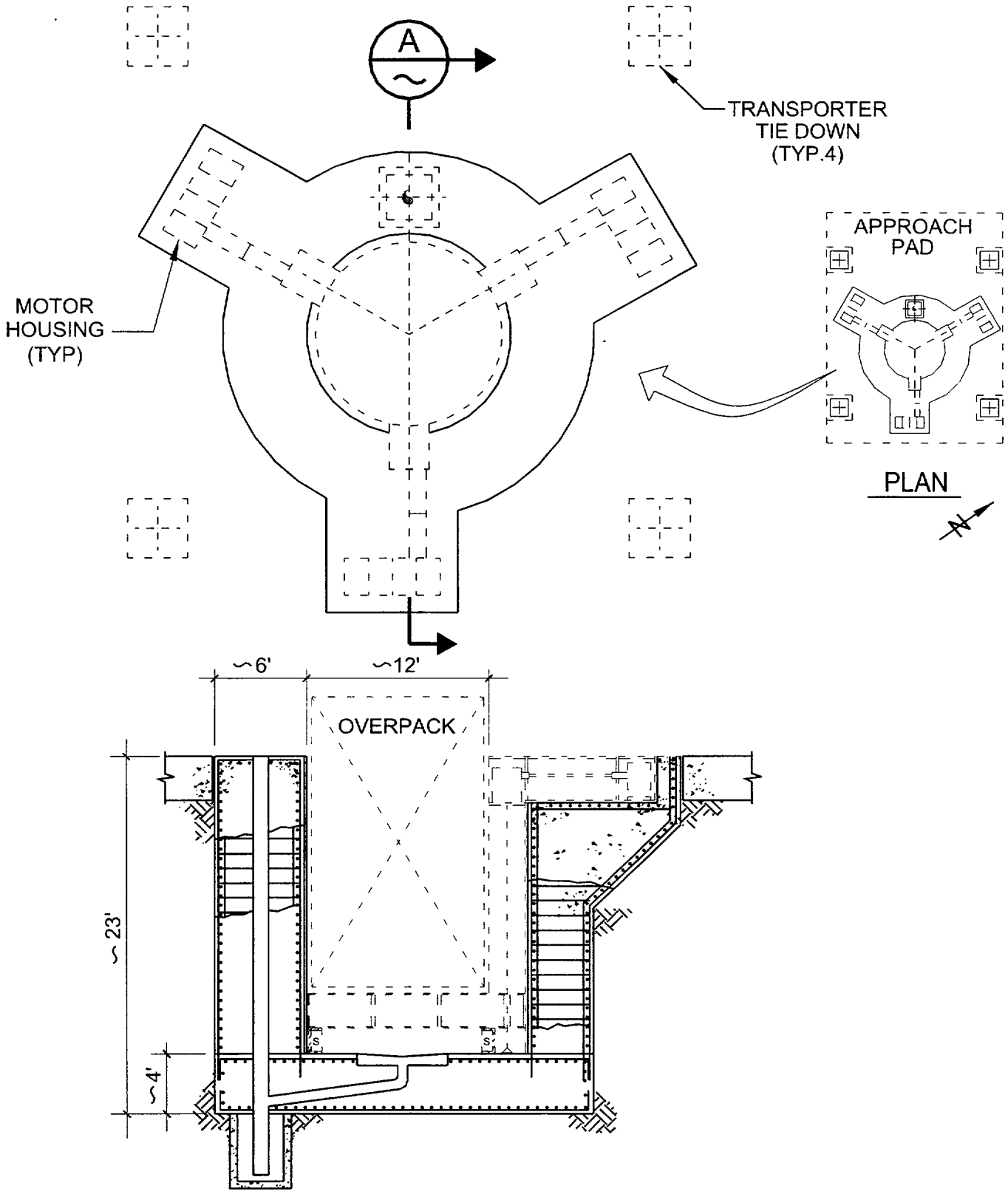

SECTION A
N.T.S.

CTF SUPPORT STRUCTURE

SAFETY ANALYSIS REPORT

DIABLO CANYON ISFSI

FIGURE 4.2-4
CASK TRANSFER FACILITY
SUPPORT STRUCTURE
(SCHEMATIC)

0NPG2ND

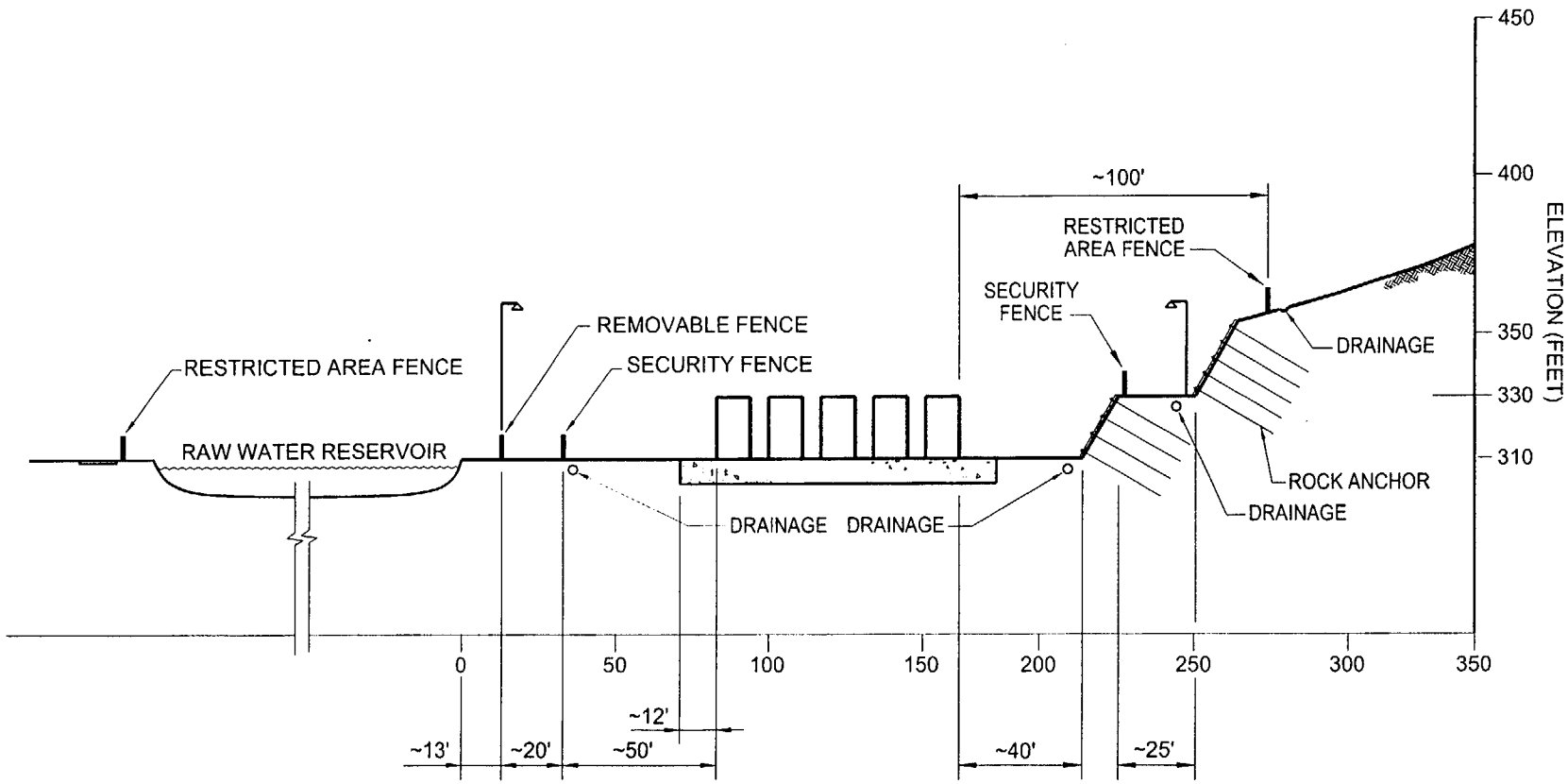

CROSS SECTION THROUGH ISFSI
LOOKING EAST

SECTION A
FIG.4.1-1

SAFETY ANALYSIS REPORT
DIABLO CANYON ISFSI
FIGURE 4.2-5
ISFSI SITE
X-SECTION VIEW

Figure Withheld Under 10 CFR 2.390

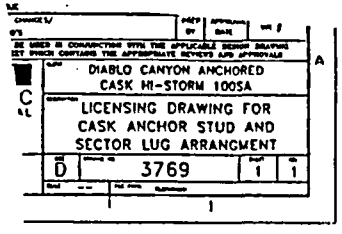

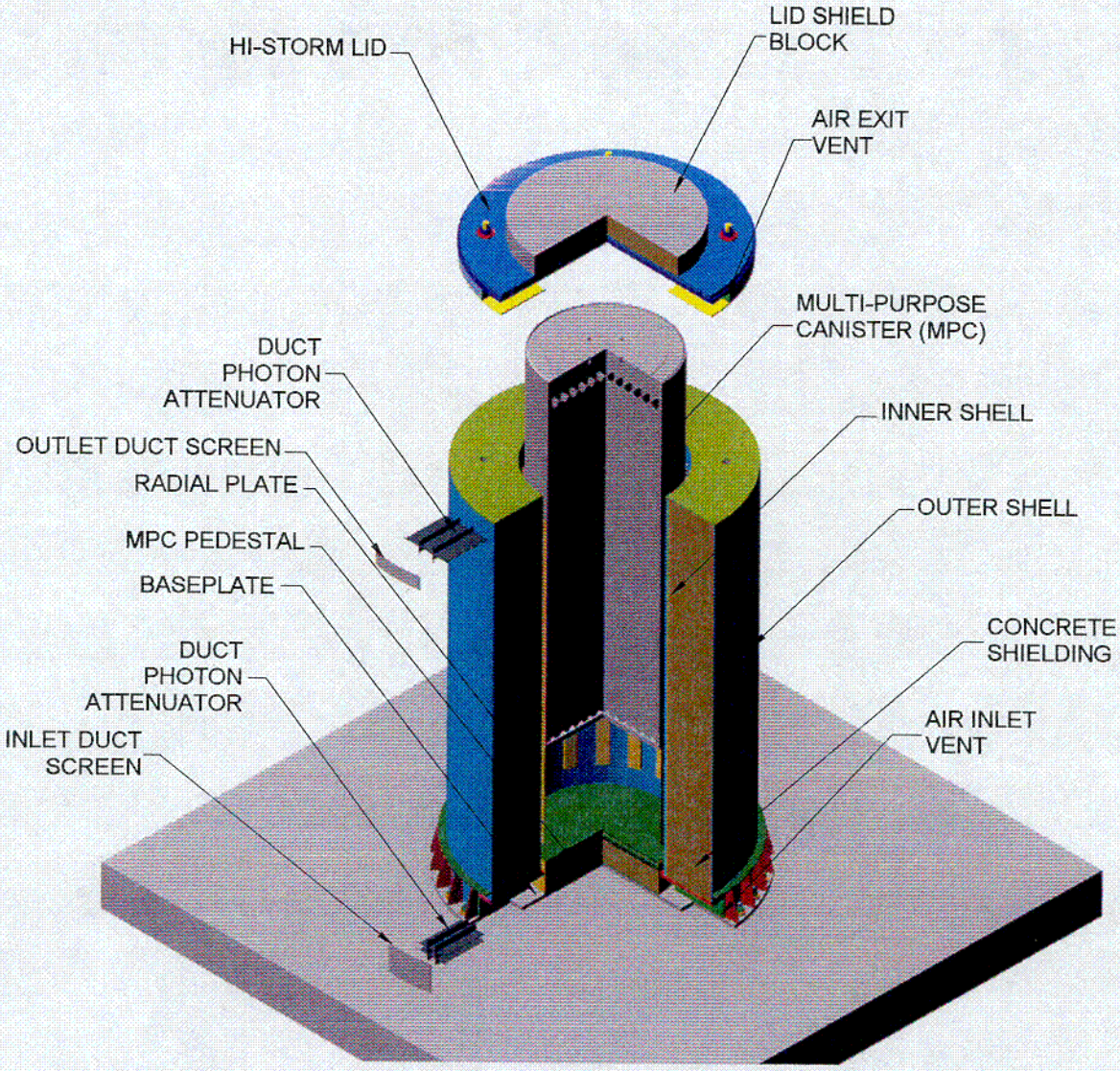

NOTE: For clarity, air exit vents are not shown rotated.

SAFETY ANALYSIS REPORT
DIABLO CANYON ISFSI
FIGURE 4.2-7 GENERIC HI-STORM 100SA SYSTEM

C01

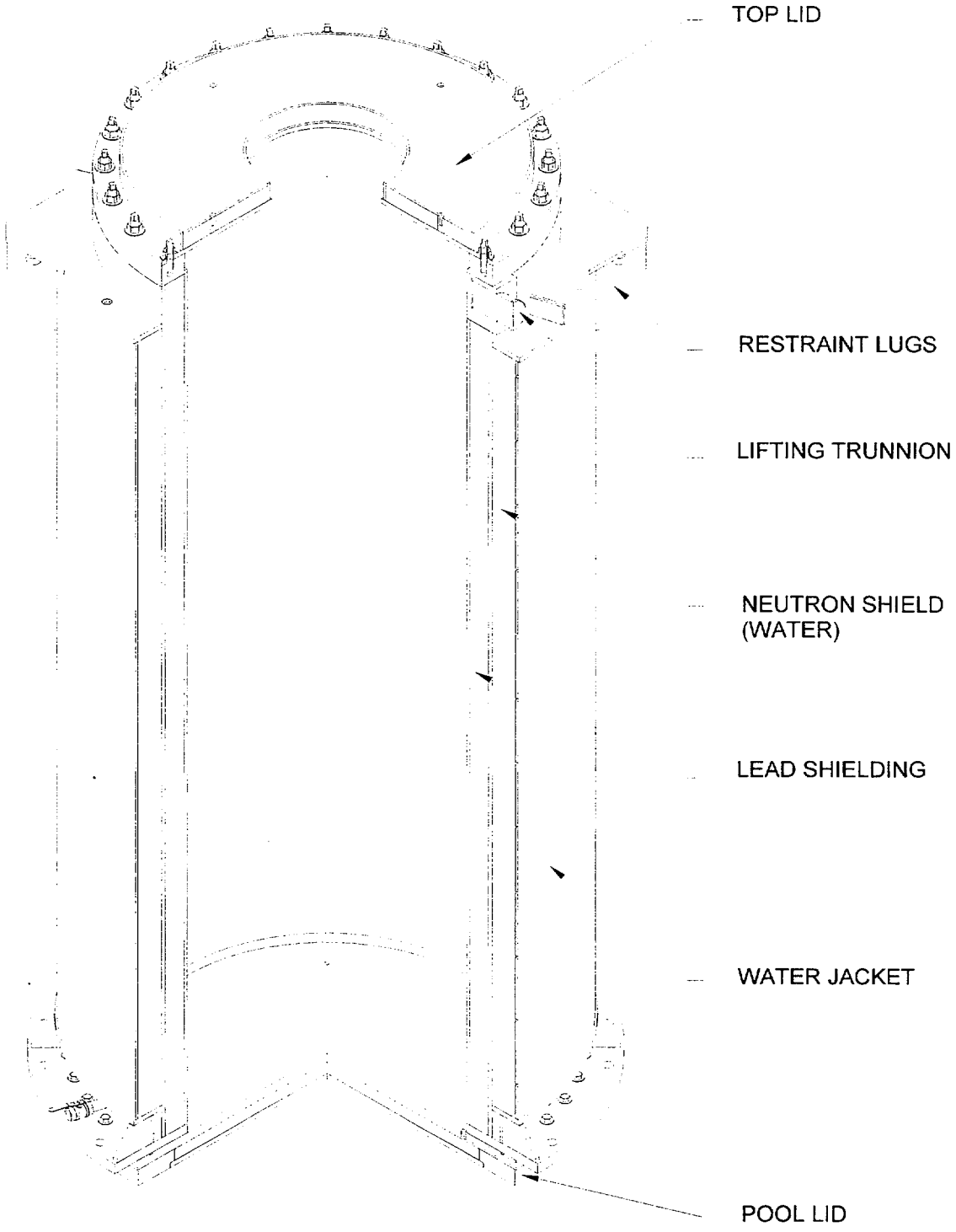

SAFETY ANALYSIS REPORT

DIABLO CANYON ISFSI

FIGURE 4.2-8
HI-TRAC TRANSFER CASK

Figure Withheld Under 10 CFR 2.390

SAFETY ANALYSIS REPORT
DIABLO CANYON ISFSI
FIGURE 4.2-9 TRANSFER CASK UPPER BUMPER ATTACHMENT MODIFICATION

Figure Withheld Under 10 CFR 2.390

SAFETY ANALYSIS REPORT
DIABLO CANYON ISFSI
FIGURE 4.2-10 TRANSFER CASK LOWER BUMPER ATTACHMENT MODIFICATION

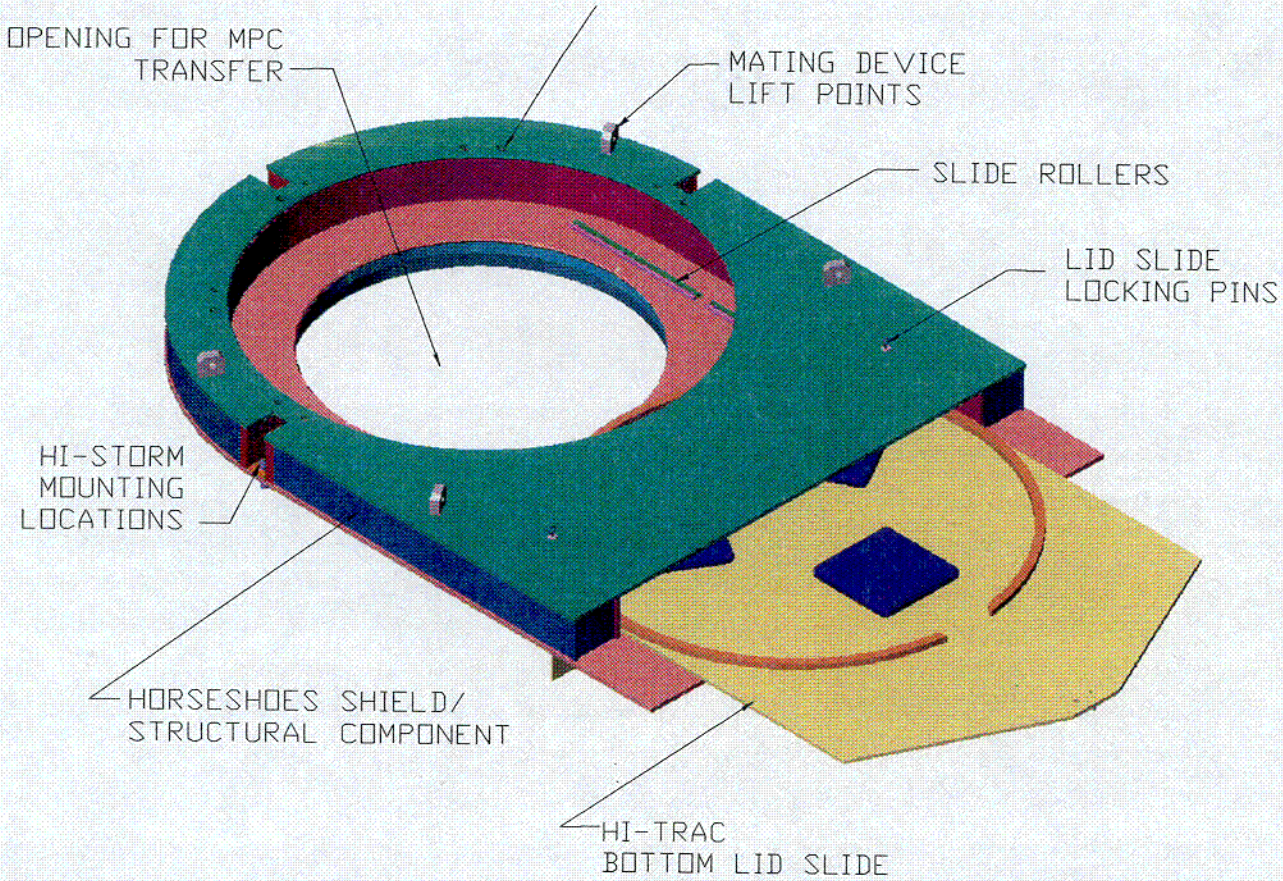

SAFETY ANALYSIS REPORT
DIABLO CANYON ISFSI
FIGURE 4.2-11 HI-STORM MATING DEVICE

C02

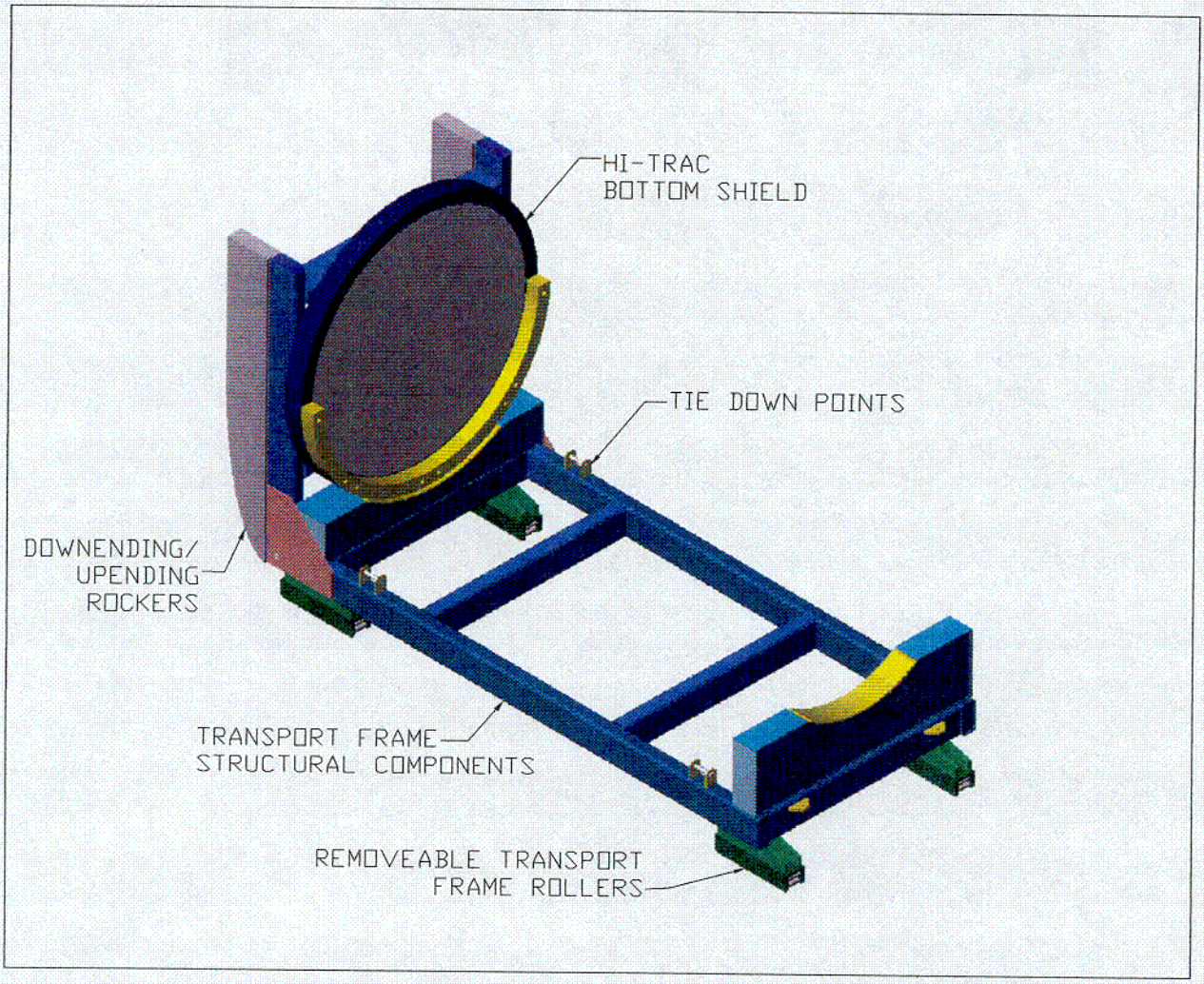

SAFETY ANALYSIS REPORT
DIABLO CANYON ISFSI
FIGURE 4.2-12 CASK TRANSPORT FRAME

C03

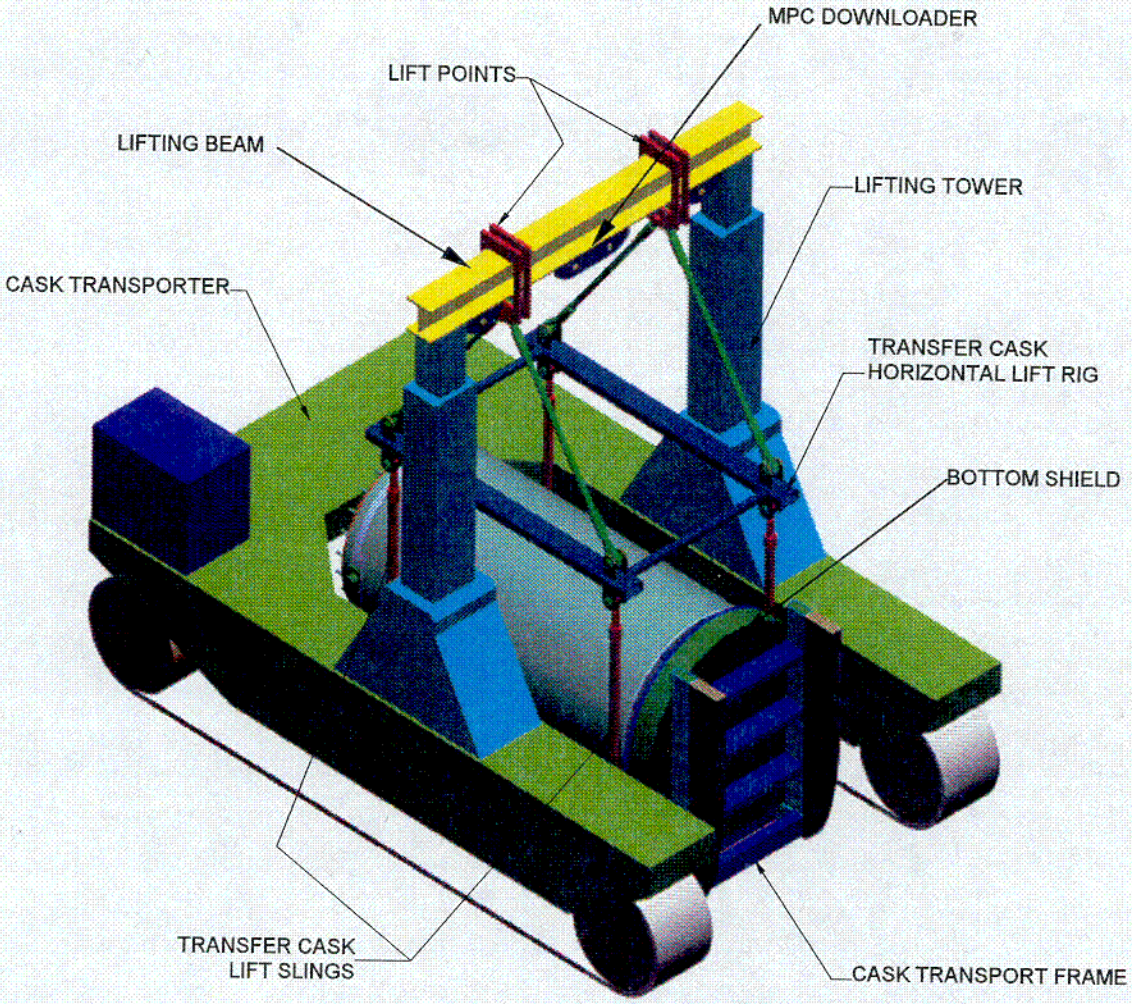

SAFETY ANALYSIS REPORT
DIABLO CANYON ISFSI
FIGURE 4.3-1 CASK TRANSPORTER WITH TRANSFER CASK IN HORIZONTAL ORIENTATION

C04

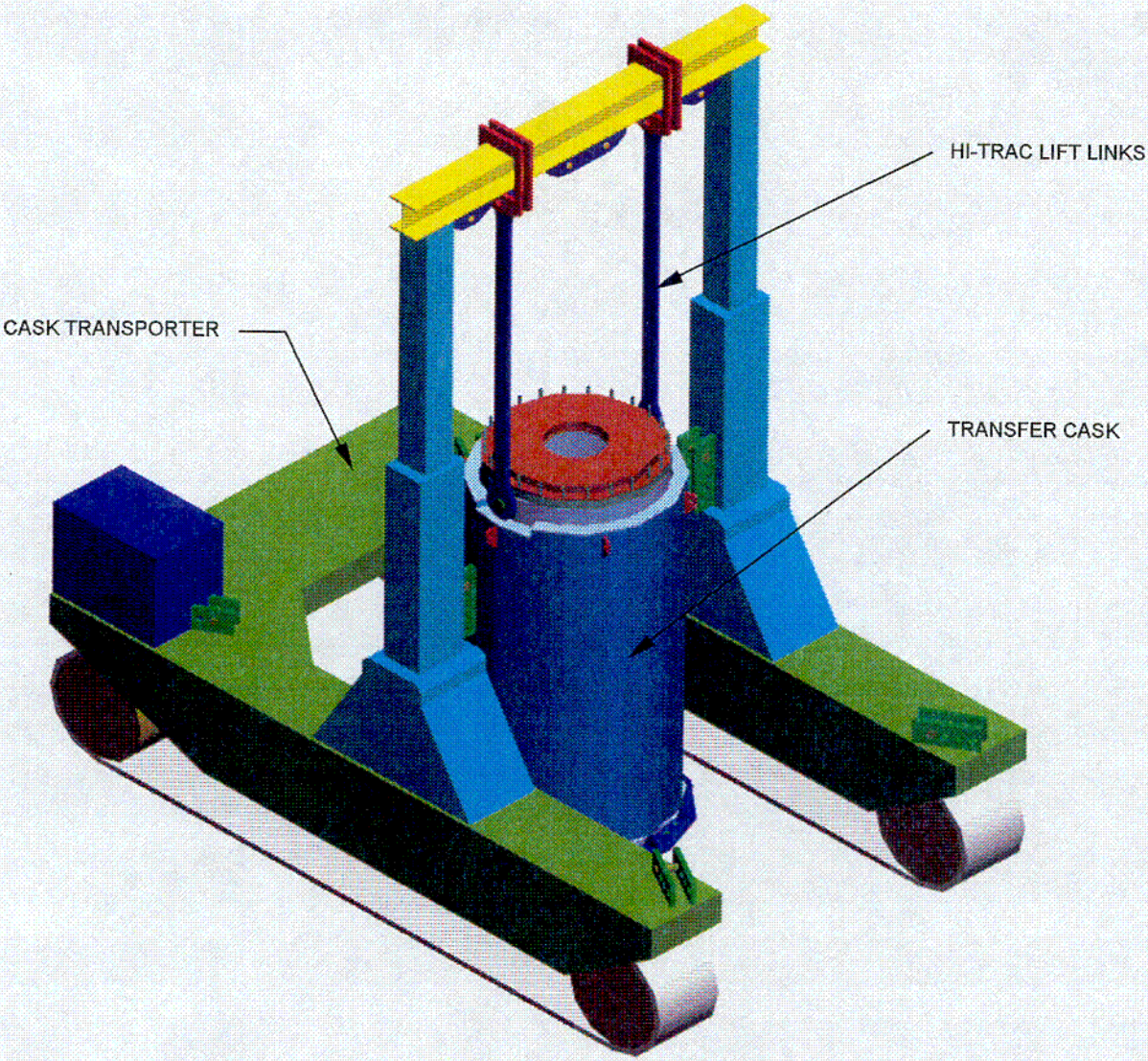

SAFETY ANALYSIS REPORT
DIABLO CANYON ISFSI
FIGURE 4.3-2 CONCEPTUAL CONFIGURATION OF CASK TRANSPORTER WITH TRANSFER CASK IN VERTICAL ORIENTATION

C05

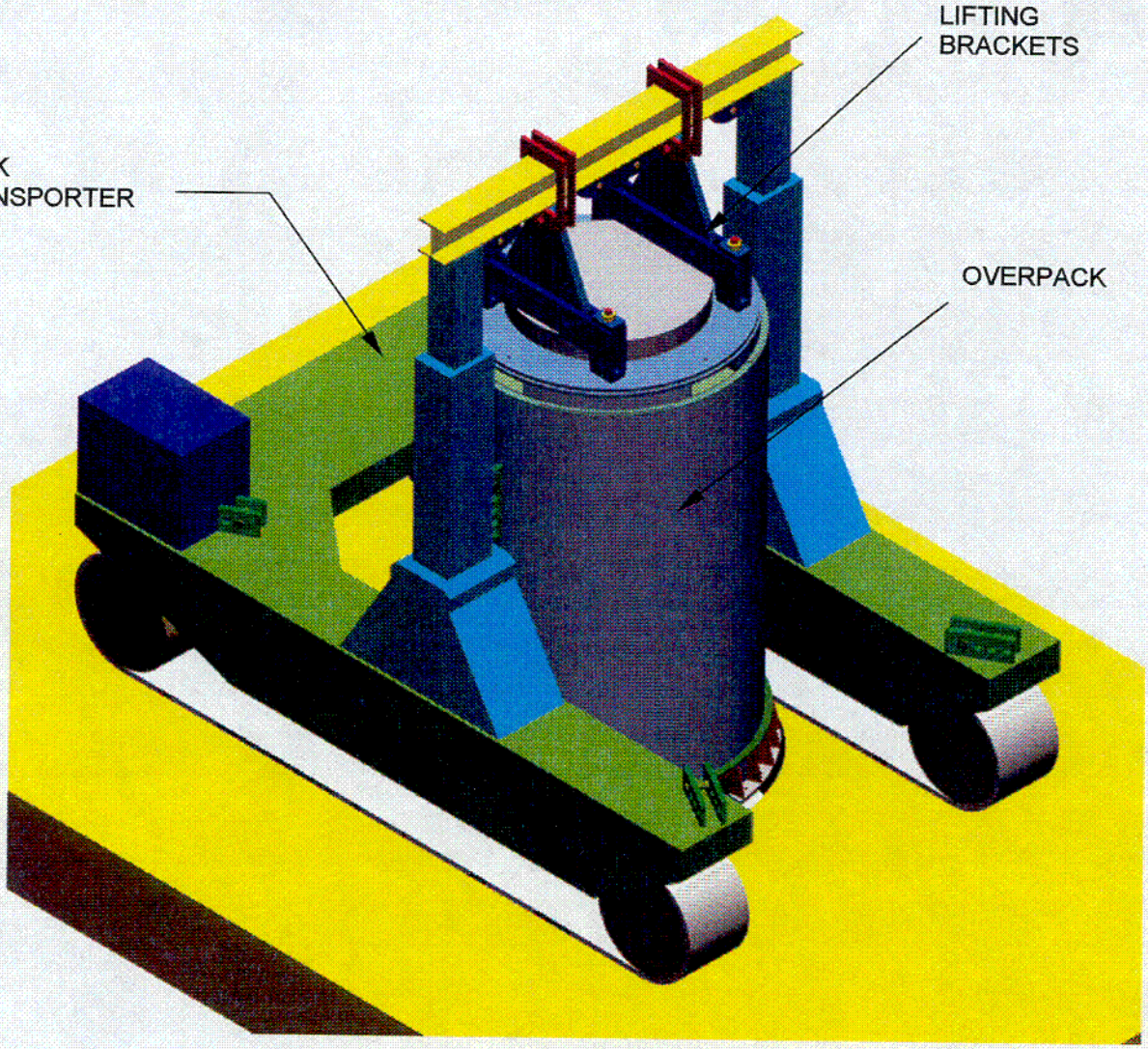

NOTE: For clarity, exit air vents are not shown rotated.

SAFETY ANALYSIS REPORT
DIABLO CANYON ISFSI
FIGURE 4.3-3 CONCEPTUAL CONFIGURATION OF CASK TRANSPORTER CARRYING GENERIC HI-STORM 100SA OVERPACK WITH HI-STORM LIFTING BRACKETS

C06

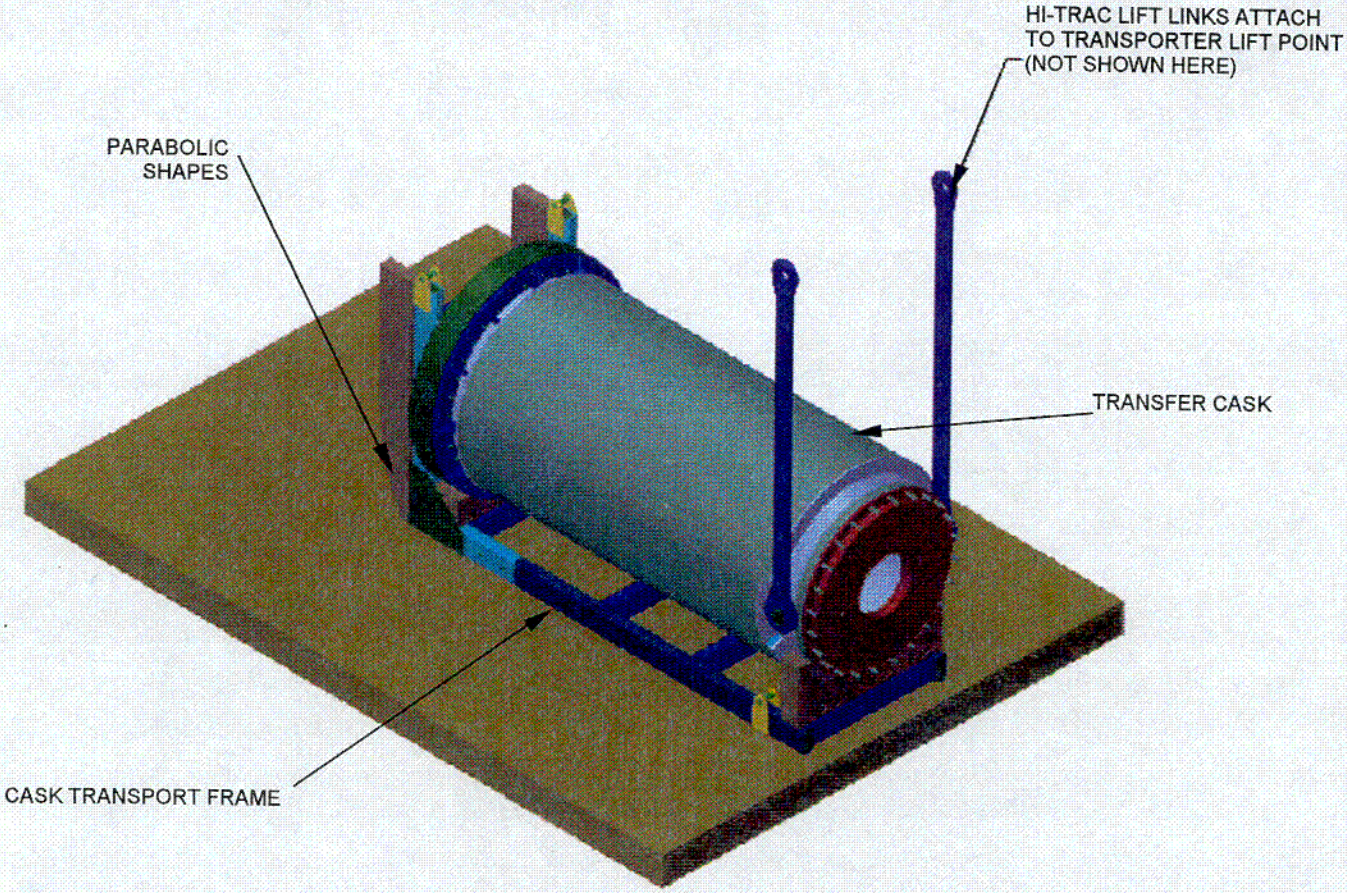

SAFETY ANALYSIS REPORT
DIABLO CANYON ISFSI
FIGURE 4.3-4 LIFT LINKS AND TRANSPORT FRAME WITH TRANSFER CASK FULLY DOWNENDED

C07

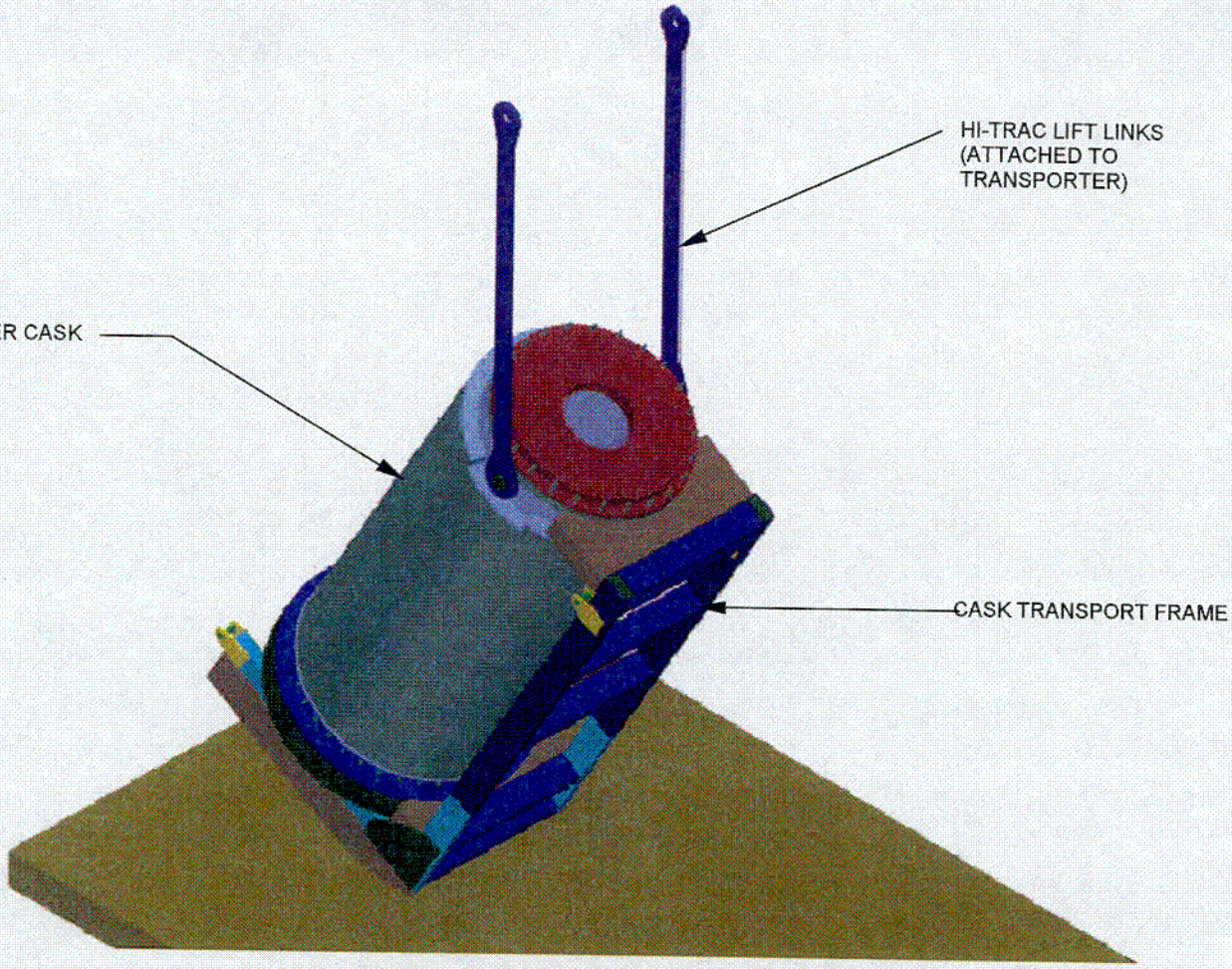

SAFETY ANALYSIS REPORT
DIABLO CANYON ISFSI
FIGURE 4.3-5 LIFT LINKS AND TRANSPORT FRAME WITH TRANSFER CASK PARTIALLY UPENDED

C08

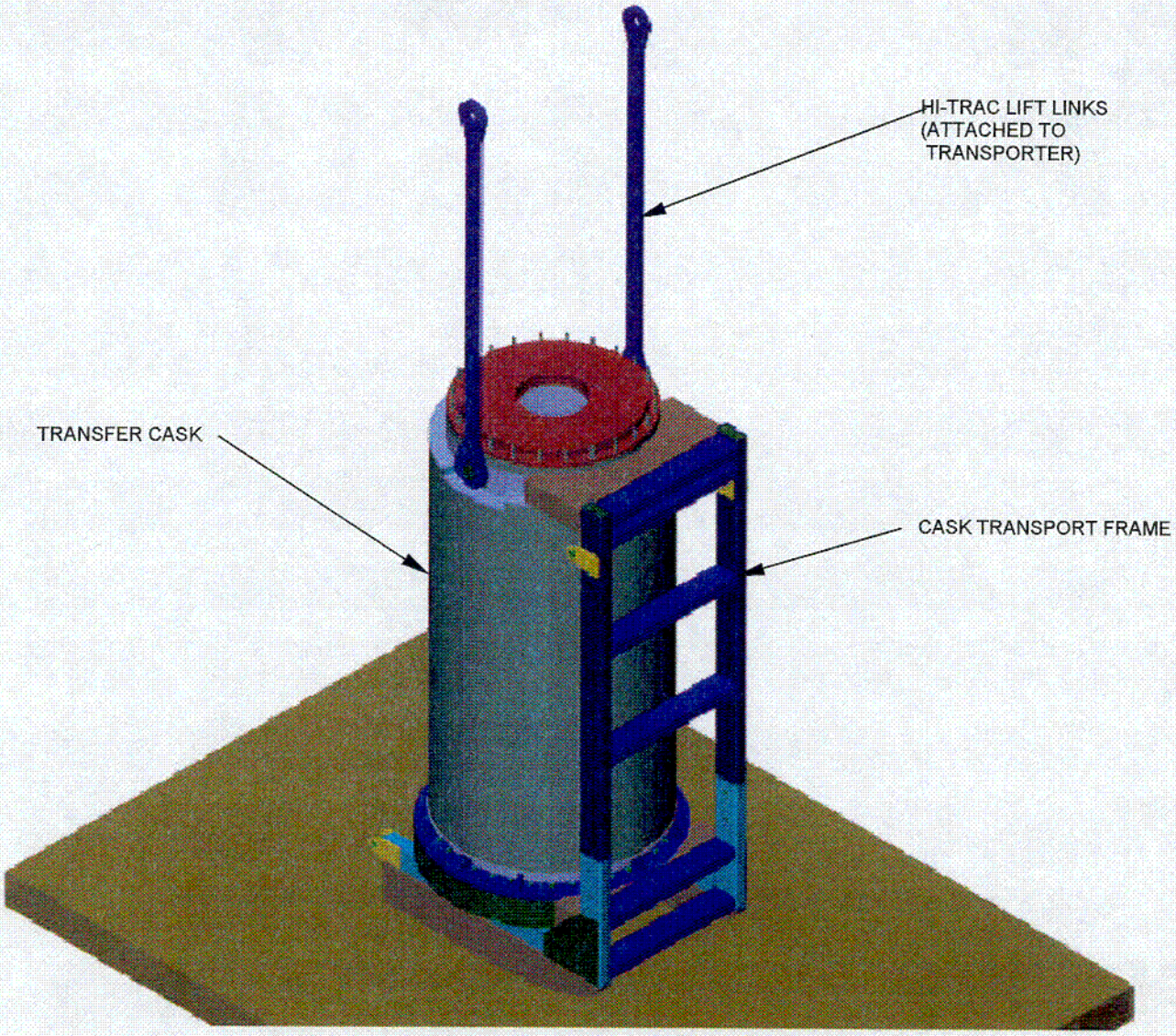

SAFETY ANALYSIS REPORT
DIABLO CANYON ISFSI
FIGURE 4.3-6 LIFT LINKS AND TRANSPORT FRAME WITH TRANSFER CASK FULLY UPENDED

C09

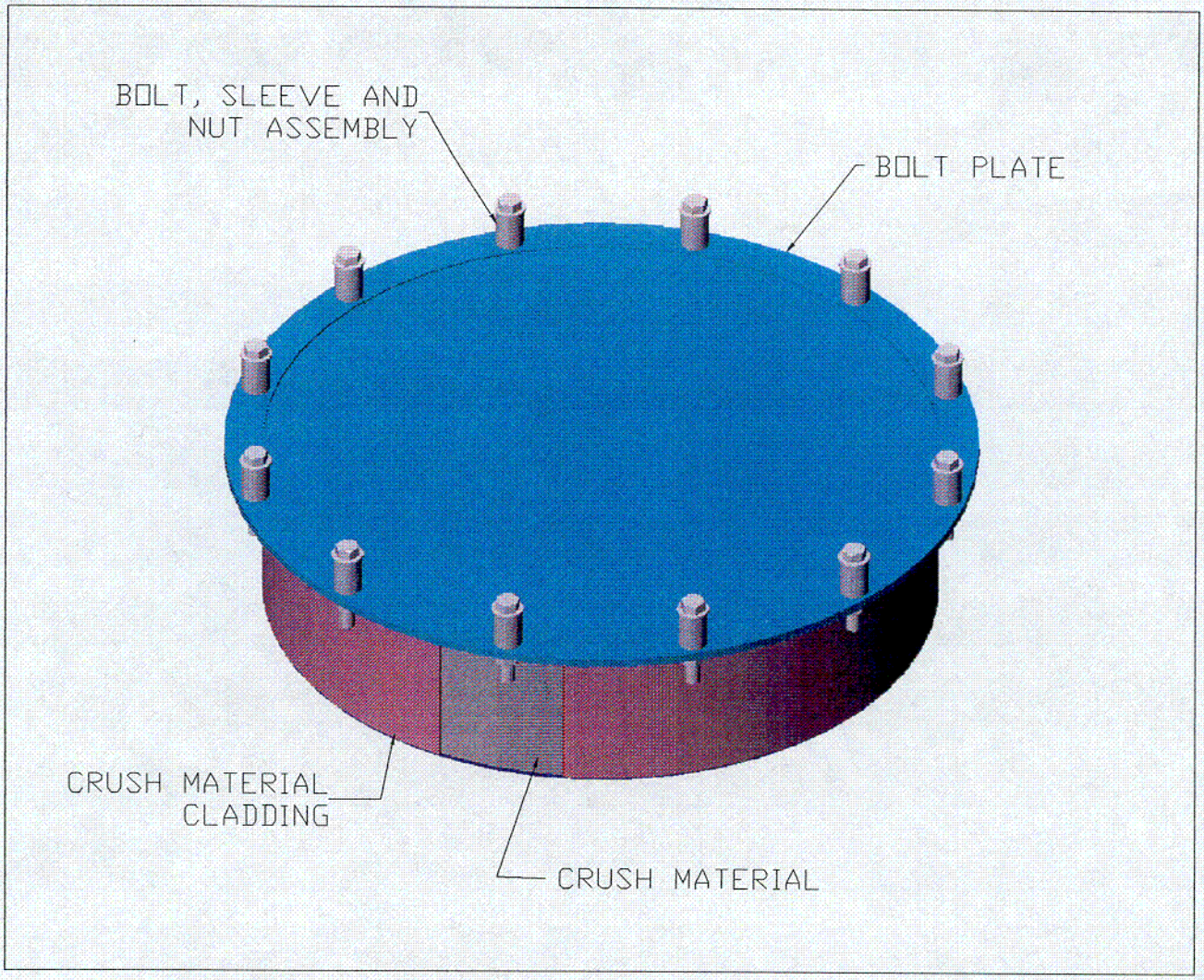

SAFETY ANALYSIS REPORT
DIABLO CANYON ISFSI
FIGURE 4.4-1 TRANSFER CASK IMPACT LIMITER

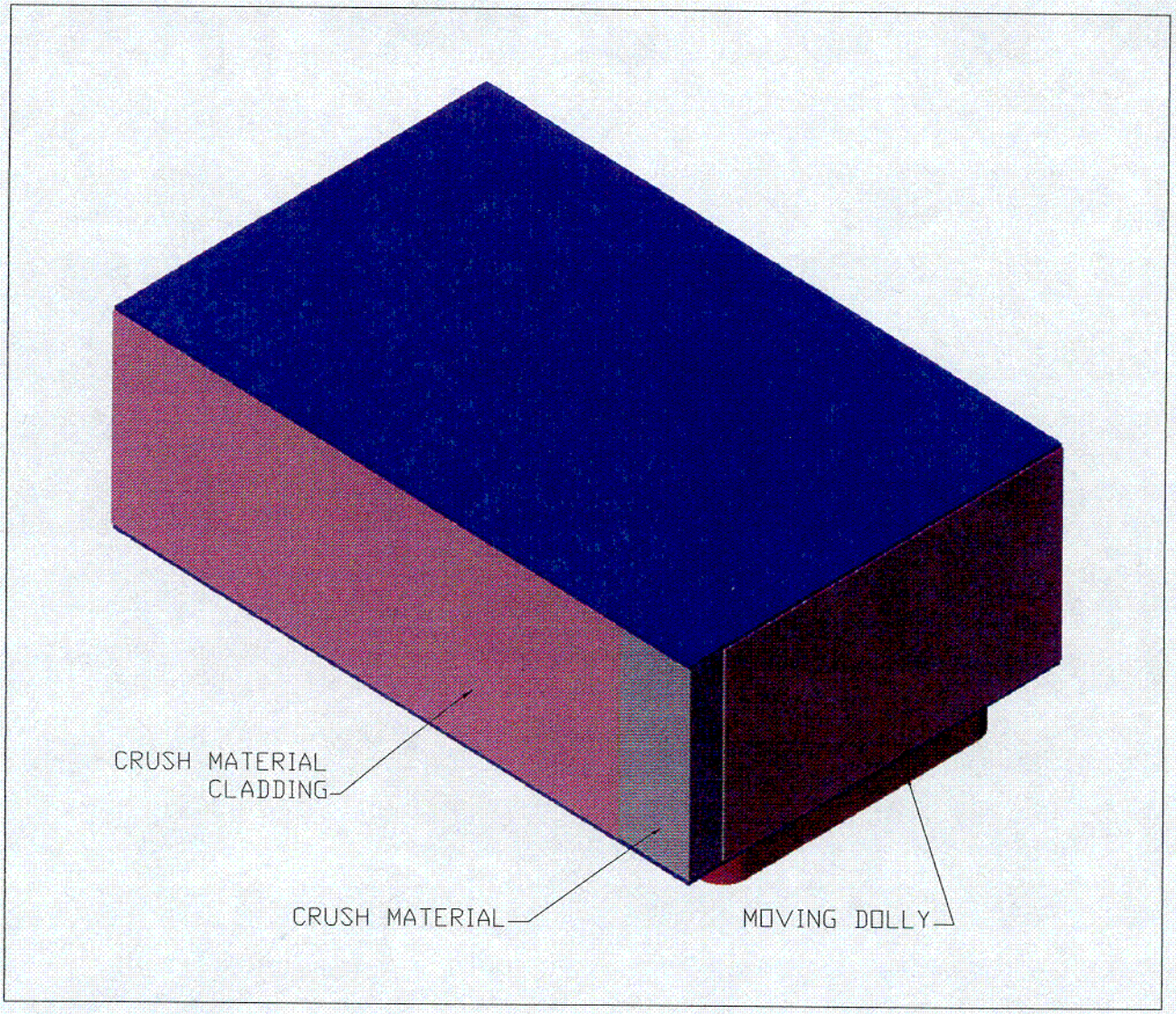

SAFETY ANALYSIS REPORT
DIABLO CANYON ISFSI
FIGURE 4.4-2 CASK TRANSPORT FRAME IMPACT LIMITER

C11

Figure Withheld Under 10 CFR 2.390

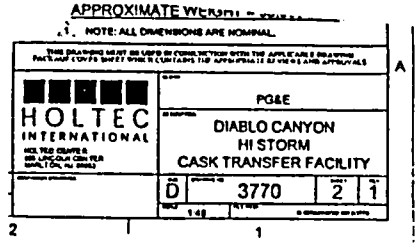

Figure Withheld Under 10 CFR 2.390

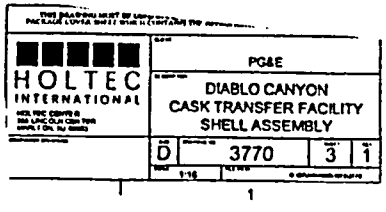

Figure Withheld Under 10 CFR 2.390

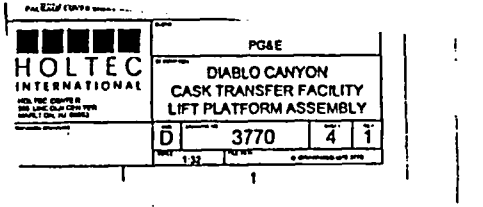

Figure Withheld Under 10 CFR 2.390

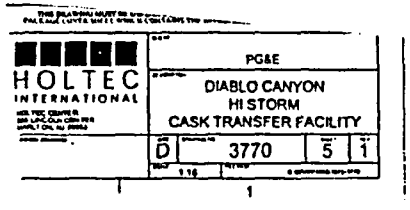

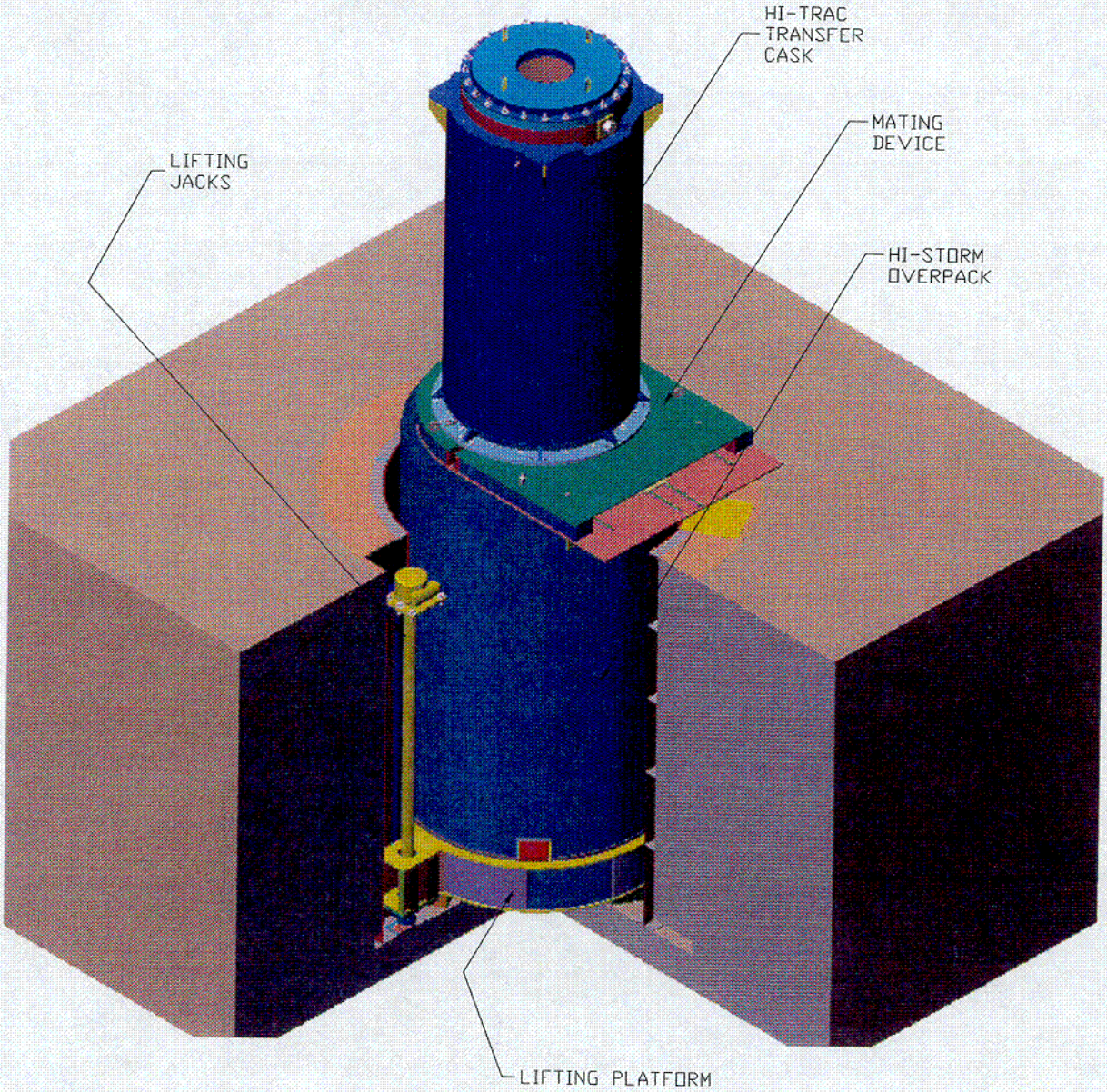

Note: Transporter and lateral restraints not shown.

SAFETY ANALYSIS REPORT
DIABLO CANYON ISFSI

FIGURE 4.4-4
LOADED HI-TRAC STACKED ON THE HI-STORM IN THE FULL-DOWN POSITION IN THE CTF