71-9225

NAC INTERNATIONAL

Atlanta Corporate Headquarters
3930 East Jones Bridge Road, Suite 200
Norcross, GA 30092
Phone 770-447-1144
Fax 770-447-1797
www.nacintl.com

May 1, 2007

U.S. Nuclear Regulatory Commission
11555 Rockville Pike
Rockville, MD 20852-2738

Attn: Document Control Desk

Subject: Submittal of a Request for an Amendment of Certificate of Compliance (CoC) No. 9225 for the NAC-LWT Cask to Incorporate Various Changes to the Authorized MTR Fuel Contents

Docket No. 71-9225

Reference:
1. Model No. NAC-LWT Package, CoC No. 9225, Revision 43, U.S. Nuclear Regulatory Commission (NRC), December 15, 2006
2. Safety Analysis Report (SAR) for the NAC Legal Weight Truck Cask, Revision 37, NAC International, June, 2005, Including Supplements Dated December 15, 2005; April 17, May 26, June 9 and 15, August 18 and 22, and October 12, 2006

NAC International (NAC) herewith submits a request for approval of an Amendment to Reference 1 to incorporate the following changes:

- Revise the LEU MTR fuel description to incorporate an increase in allowable ^{235}U content and a new maximum ^{235}U loading limit. A 100-g cadmium source wire was incorporated as a potential component of the MTR element structure.

In addition, six transport vehicle, shipping frame and ISO drawings have been removed from the Chapter 1 "List of Drawings" of the NAC-LWT SAR. The six drawings are not referenced in the CoC, do not depict licensed components and are not referenced in support of any SAR analyses. Also, minor editorial changes have been made to the affected SAR pages correcting typographical errors and/or improving clarity without changing technical content. These editorial changes have not been identified by revision bars except for Figure 5.3-55, "MCNP Input for 300 TPBARs at 30 Days Cool Time – Normal Conditions & Radial Biasing," in Chapter 5 in which the entire computer run was replaced to correct editorial errors.

This submittal includes eight copies of this transmittal letter and Revision LWT-07B changed pages for Reference 2 updated with the previously approved ANSTO and TPBAR amendment information. The changed pages incorporate the requested amendment. Attachment 1 to this letter contains a summary of all changes requested herein. Consistent with NAC administrative practice, this proposed revision is numbered to uniquely identify the applicable changed pages. Revision bars mark the SAR text changes (on Revision LWT-07B pages) that are proposed in this submittal. The included List of Effective Pages identifies the current revision level of all pages of the application.

NMSS01

ED20070023

Please note that a considerable number of LWT-07B pages with no changes (no revision bars) are included as a result of text flow. Upon final approval of this application, the LWT-07B changed pages and all ANSTO/TPBAR revision pages will be reformatted, assigned the next appropriate SAR revision number, and incorporated into the NAC-LWT SAR.

In this amendment request, the proposed changes to the authorized contents are described in Chapter 1. Containment, shielding and criticality evaluations documenting the adequacy of the NAC-LWT cask for the LEU MTR fuel characteristics changes are presented in SAR Chapters 4, 5 and 6, respectively. Chapter 7 has been revised to address operational and loading requirements for the high fissile mass LEU MTR elements in the operating procedures. The NAC-LWT will continue to meet all of the regulatory requirements of 10 CFR 71.

The requested changes have no impact on the structural and thermal evaluations contained in the NAC-LWT SAR, as the revised LEU MTR contents are enveloped by the current analyses for element mass and decay heat load. The acceptance tests and maintenance program for the NAC-LWT packages is unaffected by this amendment request.

The approval of the high fissile mass LEU MTR contents will permit the performance of the planned transport of U.S. Department of Energy (DOE)-owned fuel elements from the Joint Research Centre in Petten, The Netherlands. The transport is currently scheduled for early spring 2008, and is planned to be part of a multicask and multifacility spent fuel transport campaign in Europe as part of the DOE National Nuclear Security Administration's (NNSA) Foreign Research Reactor (FRR) Program. As such, a U.S. Department of Transportation Certificate of Competent Authority (CoCA) will be required to be requested and issued to support the shipping campaign. In addition to the CoCA, competent authority approval will be required from several countries impacted by the location of the reactor facilities and the transportation route.

To meet DOE's transport schedule, NAC requests an amendment approval date of September 15, 2007. NAC engineering and licensing staff and a DOE representative are scheduled to meet with the NRC project review team on May 14, 2007 at 1:00 PM to detail the requested changes, describe the revised analyses and conclusions, and to respond to any preliminary questions or issues raised by the staff. To support the requested CoC issue date, NAC will submit a proposed revised CoC for NRC staff review and use by July 16, 2007.

NAC INTERNATIONAL

If you have any comments or questions, please contact me on my direct line at 678-328-1274.

Sincerely,

Anthony L. Patko
Director, Licensing
Engineering

Attachment 1 – List of Changes in NAC-LWT SAR, Revision LWT-07B

Enclosures

Attachment 1

List of Changes in NAC-LWT SAR, Revision LWT-07B

Chapter 1

1. Chapter 1 List of Drawings – Deleted the following drawings:

315-40-13	Rev 1	NAC-LWT Cask Assembly and Trailer
315-40-14	Rev 2	NAC-LWT Cask Assembly in ISO Container and Trailer
315-40-15	Rev 4	NAC-LWT Support Installation – ISO Container LWT Cask
315-40-17	Rev 4	NAC-LWT Transport Cask Rear Support
315-40-18	Rev 5	NAC-LWT Transport Cask Front Support
315-40-20	Rev 1	NAC-LWT Transport Cask Support Spacers

   These drawings were deleted from the SAR as they represent non-Q transport vehicle related items and assemblies that are not currently listed as effective drawings in Certificate of Compliance (CoC) No. 9225, as these drawings do not present certified or analyzed components. In addition, their inclusion in the SAR required the submittal and NRC approval of revised non-Q component drawings prior to allowing modifications to the equipment to be implemented. The deletion of these drawings does not impact the analysis of the NAC-LWT package in accordance with 10 CFR 71.

2. Section 1.2.3 – Revised the referenced tables for Chapter 6 criticality results for various MTR fuel element content conditions.

3. Section 1.2.3.2 – Revised the LEU MTR fuel description to incorporate the increase in allowable ^{235}U content (i.e., >470 g/element or 22 g per plate, up to a maximum of 640 g/element or 32 g per plate) for MTR fuel elements and plates. The description also incorporated a new maximum loading condition limit for the >470 g elements of up to four per MTR basket module. The section also incorporates an allowance of up to 100-g cadmium source as part of the MTR element structure.

4. Table 1.2-4 – The table was revised to modify the allowable "Maximum Uranium, kg U" row for the LEU MTR elements and to add a footnote limiting the maximum number of >470 g per element to a limit of up to four per MTR basket module. The new limit will affect the maximum number of LEU MTR elements that can be accommodated in any of the three MTR basket assembly designs.

Chapter 4

1. Section 4.5.5 – Incorporated wording to address change (increase) in maximum LEU MTR fuel mass to 640 grams ^{235}U producing a larger radionuclide inventory. However, the effect of the increase is smaller on a per basket module basis as the higher mass contents are limited to four elements per module instead of the current four elements.

Attachment 1 (cont'd)

List of Changes in NAC-LWT SAR, Revision LWT-07B (cont'd)

Chapter 5

1. Section 5.1 and Table 5.1-1 – Revised to incorporate fuel characteristics for the high mass fuel contents (i.e., >470 g and a maximum of 640 g) for LEU MTR fuel elements.
2. Table 5.1-2 – Table revised to incorporate higher U weight for LEU MTR elements to 3.3684 kg.
3. Table 5.1-3 – Table revised to incorporate higher allowable U mass and Cadmium wire of up to 100 g and the effect of these changes on the source terms, and incorporate Notes 14 and 15.
4. Section 5.3.4 – Revised section and added Table 5.5-8b to address dose rate results addressing the increase in maximum LEU MTR element fuel mass to 640 grams ^{235}U.
5. Table 5.3-3 – Revised table to incorporate increase in fuel mass to >470 g ^{235}U up to a maximum of 640 g/element.
6. Figure 5.3-55 – Replaced TPBAR figure to correct editorial errors.

Chapter 6

1. Section 6.2.3 – Section revised to incorporate increase of fuel mass for the LEU MTR fuel elements up to a maximum of 736 g ^{235}U, which corresponds to 32 grams per plate in 23 plates.
2. Section 6.3.3.1 –Added discussion of high fissile payloads and possible requirement for partial basket loading into the criticality model description.
3. Added Figure 6.3.3-5 showing MTR basket module fuel loading pattern.
4. Section 6.4.3.14 – Revised to address increased fissile material mass in the MTR fuel element and the conclusions of the criticality results (i.e., limit the basket module to no more than four high fissile mass elements/module).
5. Added new Tables 6.4.3-26, 6.4.3-27 and 6.4.3-28 to present the results of the LEU MTR element high fissile mass criticality analysis.

Chapter 7

1. Section 7.1.5 – Added discussion of operational impact of limiting high fissile mass LEU MTR fuel elements to four per basket module. Added a new procedural step to the MTR fuel loading analyses prepared prior to each basket loading to identify "high fissile mass" per element as new selection/categorization criteria.

Attachment 1 (cont'd)

List of Changes in NAC-LWT SAR, Revision LWT-07B (cont'd)

Chapter 7 (cont'd)

2. Section 7.1.5.1 – Added discussion of the limits on high fissile mass LEU MTR element loading positions within the seven-element basket and limiting the number to no more than four elements. Clarified loading of MTR plate canister to define that the canister can be loaded into any basket module location
3. Section 7.1.5.2 – Added a cross reference for the loading of high fissile mass LEU MTR fuel elements in accordance with 7.1.5.1.
4. Figure 7.1-2 – Revised minimum cool time versus burnup table to add new 30 W uniform loading curve for 640 g ^{235}U LEU MTR fuel elements.

April 2007

Revision LWT-07B

NAC-LWT

Legal Weight Truck Cask System

SAFETY ANALYSIS REPORT

Docket No. 71-9225

NAC INTERNATIONAL

Atlanta Corporate Headquarters: 3930 East Jones Bridge Road, Norcross, Georgia 30092 USA
Phone 770-447-1144, Fax 770-447-1797, www.nacintl.com

List of Effective Pages

LIST OF EFFECTIVE PAGES

Chapter 1

Chapter 1 Appendices 1-A
through 1-G

74 drawings in the
Chapter 1 List of Drawings

Chapter 2

LIST OF EFFECTIVE PAGES (Continued)

LIST OF EFFECTIVE PAGES (Continued)

LIST OF EFFECTIVE PAGES (Continued)

LIST OF EFFECTIVE PAGES (Continued)

LIST OF EFFECTIVE PAGES (Continued)

LIST OF EFFECTIVE PAGES (Continued)

LIST OF EFFECTIVE PAGES (Continued)

LIST OF EFFECTIVE PAGES (Continued)

LIST OF EFFECTIVE PAGES (Continued)

LIST OF EFFECTIVE PAGES (Continued)

LIST OF EFFECTIVE PAGES (Continued)

LIST OF EFFECTIVE PAGES (Continued)

LIST OF EFFECTIVE PAGES (Continued)

LIST OF EFFECTIVE PAGES (Continued)

LIST OF EFFECTIVE PAGES (Continued)

LIST OF EFFECTIVE PAGES (Continued)

LIST OF EFFECTIVE PAGES (Continued)

Chapter 3

LIST OF EFFECTIVE PAGES (Continued)

LIST OF EFFECTIVE PAGES (Continued)

Chapter 4

LIST OF EFFECTIVE PAGES (Continued)

LIST OF EFFECTIVE PAGES (Continued)

Chapter 5

LIST OF EFFECTIVE PAGES (Continued)

LIST OF EFFECTIVE PAGES (Continued)

LIST OF EFFECTIVE PAGES (Continued)

LIST OF EFFECTIVE PAGES (Continued)

Chapter 6

LIST OF EFFECTIVE PAGES (Continued)

LIST OF EFFECTIVE PAGES (Continued)

LIST OF EFFECTIVE PAGES (Continued)

LIST OF EFFECTIVE PAGES (Continued)

LIST OF EFFECTIVE PAGES (Continued)

LIST OF EFFECTIVE PAGES (Continued)

LIST OF EFFECTIVE PAGES (Continued)

LIST OF EFFECTIVE PAGES (Continued)

LIST OF EFFECTIVE PAGES (Continued)

LIST OF EFFECTIVE PAGES (Continued)

LIST OF EFFECTIVE PAGES (Continued)

LIST OF EFFECTIVE PAGES (Continued)

LIST OF EFFECTIVE PAGES (Continued)

LIST OF EFFECTIVE PAGES (Continued)

LIST OF EFFECTIVE PAGES (Continued)

LIST OF EFFECTIVE PAGES (Continued)

LIST OF EFFECTIVE PAGES (Continued)

LIST OF EFFECTIVE PAGES (Continued)

Chapter 7

LIST OF EFFECTIVE PAGES (Continued)

Chapter 8

Chapter 9

THIS PAGE INTENTIONALLY LEFT BLANK

Master Table of Contents

MASTER TABLE OF CONTENTS

MASTER TABLE OF CONTENTS (continued)

MASTER TABLE OF CONTENTS (continued)

MASTER TABLE OF CONTENTS (continued)

MASTER TABLE OF CONTENTS (continued)

MASTER TABLE OF CONTENTS (continued)

MASTER TABLE OF CONTENTS (continued)

MASTER TABLE OF CONTENTS (continued)

Chapter 1

TABLE OF CONTENTS

LIST OF FIGURES

LIST OF TABLES

LIST OF DRAWINGS

315-40-01		Rev 6	Legal Weight Truck Transport Cask Assembly
315-40-02	Sheets 1 – 2	Rev 19	NAC-LWT Cask Body Assembly
315-40-03	Sheets 1 – 6	Rev 6	NAC-LWT Transport Cask Body
315-40-03	Sheets 1 – 7	Rev 22	NAC-LWT Transport Cask Body
315-40-04		Rev 10	NAC-LWT Transport Cask Lid Assembly
315-40-05		Rev 9	NAC-LWT Transport Cask Upper Impact Limiter
315-40-06		Rev 9	NAC-LWT Transport Cask Lower Impact Limiter
315-40-08	Sheets 1 – 5	Rev 16	NAC-LWT Transport Cask Parts Detail
315-40-09		Rev 2	NAC-LWT PWR Basket Spacer
315-40-10	Sheets 1 – 2	Rev 7	NAC-LWT Cask PWR Basket
315-40-11		Rev 2	NAC-LWT BWR Fuel Basket Assembly
315-40-12		Rev 3	NAC-LWT Metal Fuel Basket Assembly
315-40-045		Rev 4	Weldment, 7 Element Basket, 42 MTR Fuel Base Module
315-40-046		Rev 4	Weldment, 7 Element Basket, 42 MTR Fuel Intermediate Module
315-40-047		Rev 4	Weldment, 7 Element Basket, 42 MTR Fuel Top Module
315-40-048		Rev 2	Legal Weight Truck Transport Cask Assembly, 42 MTR Element
315-40-049		Rev 4	Weldment, 7 Element Basket, 28 MTR Fuel Base Module
315-40-050		Rev 4	Weldment, 7 Element Basket, 28 MTR Fuel Intermediate Module
315-40-051		Rev 4	Weldment, 7 Element Basket, 28 MTR Fuel Top Module
315-40-052		Rev 2	Legal Weight Truck Transport Cask Assembly, 28 MTR Element
315-40-070		Rev 3	Weldment, 7 Cell Basket, TRIGA Fuel Base Module
315-40-071		Rev 3	Weldment, 7 Cell Basket, TRIGA Fuel Intermediate Module
315-40-072		Rev 3	Weldment, 7 Cell Basket, TRIGA Fuel Top Module
315-40-074		Rev 2	Lid Assembly, Screened Failed Fuel Can, TRIGA Fuel
315-40-075		Rev 1	Assembly, Screened Failed Fuel Can, TRIGA Fuel
315-40-076		Rev 1	Body, Screened Failed Fuel Can, TRIGA Fuel
315-40-079		Rev 2	Legal Weight Truck Transport Cask Assy, TRIGA Fuel
315-040-080		Rev 2	Weldment, 7 Cell Poison Basket, TRIGA Fuel Base Module
315-040-081		Rev 2	Weldment, 7 Cell Poison Basket, TRIGA Fuel Intermediate Module
315-040-082		Rev 2	Weldment, 7 Cell Poison Basket, TRIGA Fuel Top Module
315-040-083		Rev 0	Spacer, LWT Cask Assembly, TRIGA Fuel
315-40-084		Rev 3	Legal Weight Truck Transport Cask Assy, 140 TRIGA Elements
315-40-086		Rev 1	Assembly, Sealed Failed Fuel Can, TRIGA Fuel
315-40-087		Rev 5	Canister Lid Assembly, Sealed Failed Fuel Can, TRIGA Fuel
315-40-088		Rev 2	Canister Body Assembly, Sealed Failed Fuel Can, TRIGA Fuel
315-40-090		Rev 2	Weldment, 7 Element Basket, 35 MTR Fuel Base Module
315-40-091		Rev 2	Weldment, 7 Element Basket, 35 MTR Fuel Intermediate Module
315-40-092		Rev 2	Weldment, 7 Element Basket, 35 MTR Fuel Top Module
315-40-094		Rev 3	Legal Weight Truck Transport Cask Assembly, 35 MTR Element
315-40-096		Rev 2	Fuel Rod Insert, TRIGA Fuel
315-40-098	Sheets 1 - 2	Rev 3	Can Assembly, LWT Pin Shipment
315-40-099	Sheets 1 - 3	Rev 3	Can Weldment, PWR/BWR Transport Canister

LIST OF DRAWINGS (continued)

315-40-100	Sheets 1 - 3	Rev 3	Lids, PWR/BWR Transport Canister
315-40-101		Rev 0	4 X 4 Insert, PWR/BWR Transport Canister
315-40-102		Rev 1	5 X 5 Insert, PWR/BWR Transport Canister
315-40-103		Rev 0	Pin Spacer, PWR/BWR Transport Canister
315-40-104	Sheets 1 - 2	Rev 2	Legal Weight Truck Transport Cask Assy, PWR Transport Canister
315-40-105	Sheets 1 - 2	Rev 3	PWR Insert PWR/BWR Transport Canister
315-40-106	Sheets 1 - 3	Rev 1	MTR Plate Canister, LWT Cask
315-40-108	Sheets 1 - 3	Rev 1	Weldment, 7 Cell Basket, Top Module, DIDO Fuel
315-40-109	Sheets 1 - 3	Rev 1	Weldment, 7 Cell Basket, Intermediate Module, DIDO Fuel
315-40-110	Sheets 1 - 3	Rev 1	Weldment, 7 Cell Basket, Base Module, DIDO Fuel
315-40-111		Rev 1	Legal Weight Truck, Transport Cask Assy, DIDO Fuel
315-40-113		Rev 0	Spacers, Top Module, DIDO Fuel
315-40-120	Sheets 1 - 3	Rev 2	Top Module, General Atomics IFM, LWT Cask
315-40-123	Sheets 1 - 2	Rev 1	Spacer, General Atomics IFM, LWT Cask
315-40-124		Rev 1	Transport Cask Assembly, General Atomics IFM, LWT Cask
315-40-125	Sheets 1 - 3	Rev 3	Transport Cask Assembly, Framatome/EPRI, LWT Cask
315-40-126	Sheets 1 - 2	Rev 2	Weldments, Framatome/EPRI, LWT Cask
315-40-127	Sheets 1 - 2	Rev 2	Spacer Assembly, TPBAR Shipment, LWT Cask
315-40-128	Sheets 1 - 2	Rev 2	Legal Weight Truck, Transport Cask Assy, TPBAR Shipment
032230		Rev A	RERTR Secondary Enclosure, General Atomics
032231		Rev A	HTGR Secondary Enclosure, General Atomics
032236		Rev B	RERTR Primary Enclosure, General Atomics
032237		Rev B	HTGR Primary Enclosure, General Atomics
315-40-129		Rev 1	Canister Body Assembly, Failed Fuel Can, PULSTAR
315-40-130		Rev 1	Assembly, Failed Fuel Can, PULSTAR
315-40-133	Sheets 1 - 2	Rev 1	Transport Cask Assembly, PULSTAR Shipment, LWT Cask
315-40-134		Rev 1	Body Weldment, Screened Fuel Can, PULSTAR Fuel
315-40-135		Rev 1	Assembly, Screened Fuel Can, PULSTAR Fuel
315-40-139		Rev 0	Legal Weight Truck Transport Cask Assy, ANSTO Fuel
315-40-140	Sheets 1 - 2	Rev 0	Weldment, 7 Cell Basket, Top Module, ANSTO Fuel
315-40-141	Sheets 1 - 2	Rev 0	Weldment, 7 Cell Basket, Intermediate Module, ANSTO Fuel
315-40-142	Sheets 1 - 2	Rev 0	Weldment, 7 Cell Basket, Base Module, ANSTO Fuel

The closure lid and the valve port covers (standard, alternate, and Alternate B designs) are one-piece fixtures designed for ease of handling and to maintain personnel dose rates as low as reasonably achievable (ALARA). The closure lid has built-in alignment grooves (i.e., key ways) to facilitate installation. The standard, alternate, and Alternate B port cover designs provide clearance for valves underneath the port cover. The inner O-rings on the vent and drain valve port covers are components of the cask containment boundary. For the transport of TPBAR contents, the cask is required to be configured with Alternate B drain and vent port covers incorporating metallic seals. The transport arrangements for TPBAR contents are presented in a drawing in Section 1.4.

An alternative drain tube, including a drain tube alignment ring, is required to be installed and utilized when loading and transporting modular fuel baskets (i.e., not full length) and canisters. The impact limiters and the personnel barrier are designed to be removed and installed without the aid of supplemental lifting gear or fixtures. All approved contents may be transported in an International Shipping Organization (ISO) container, except for PWR and BWR fuel assemblies. All operational features are readily apparent from the drawings provided in Section 1.4. Operational procedures are delineated in Chapter 7.

1.2.3 Contents of Packaging

The NAC-LWT cask is analyzed as presented in this SAR for the transport of the following contents:

- 1 PWR assembly;
- up to 2 BWR assemblies;
- up to 15 sound metallic fuel rods;
- up to 42 MTR fuel elements;
- up to 42 DIDO fuel assemblies;
- up to 25 PWR fuel rods (including up to 14 rods classified as damaged);
- up to 25 BWR fuel rods (including up to 14 rods classified as damaged);
- up to 9 failed metallic fuel rods;
- up to 3 severely failed metallic fuel rods in filters;
- up to 140 TRIGA fuel elements;
- up to 560 TRIGA fuel cluster rods;
- 2 GA IFM packages;
- up to 300 TPBARs (of which two can be prefailed);
- up to 55 TPBARs segmented during PIE, including segmentation debris;
- up to 700 PULSTAR fuel elements (intact or damaged);
- up to 42 spiral fuel assemblies;
- up to 42 MOATA plate bundles; or

- any combination of individual ANSTO basket modules containing either spiral fuel assemblies or MOATA plate bundles up to a total of 42 assemblies/bundles.

Shipments in the NAC-LWT package shall not exceed the following limits:

1. The maximum contents weight shall not exceed 4,000 pounds.
2. The limits specified in Tables 1.2-1 through 1.2-12 for the fuel and contents shall not be exceeded.
3. Any number of casks may be shipped at one time, one cask per tractor/trailer vehicle.
4. The maximum decay heat shall not exceed the following: 2.5 kW for a PWR fuel assembly; 2.2 kW for 2 BWR fuel assemblies; 2.3 kW for 25 PWR fuel rods, 2.1 kW for 25 BWR fuel rods; 1.26 kW for MTR fuel; 1.05 kW for DIDO fuel assemblies; 1.05 kW for TRIGA fuel elements or fuel cluster rods; 13.05 W for GA IFM packages; 0.693 kW for 300 TPBARs; 0.127 kW for TPBAR segments; 0.756 kW for spiral fuel assemblies (0.126 kW per basket); 0.126 kW for MOATA plate bundles (21 W per basket); and 0.84 kW for the PULSTAR fuel contents.
5. Radiation levels shall meet the requirements delineated in 10 CFR 71.47 or 49 CFR 173.441. The neutron shield tank may be drained for shipment of metallic fuel rods.
6. Surface contamination levels shall meet the requirements of 10 CFR 71.87(i) or 49 CFR 173.443.
7. TRIGA failed fuel and fuel debris will be shipped in sealed failed fuel cans.
8. MTR fuel elements may consist of any combination of intact or failed highly enriched uranium (HEU), medium enriched uranium (MEU) or low enriched uranium (LEU) fuel elements that are enveloped by the parameters listed in Table 1.2-4, as supported by information presented in Table 5.1-2 and Tables 6.4.3-21, 6.4.3-22, 6.4.3-25 and 6.4.3-28.
9. PWR fuel rods will be shipped in either a sealed, free flow or screened can.
10. BWR fuel rods will be shipped in either a sealed, free flow or screened can.
11. Up to 25 PWR or BWR fuel rods will be placed in a fuel assembly lattice or rod holder. Up to 14 of the fuel rods in a rod holder may be classified as damaged. Damaged fuel rods or rod sections may be placed into a fuel rod capsule prior to placing them in the fuel rod holder. Typical failed fuel rod capsule configuration is shown in Figure 1.2-11.
12. Production TPBARs will be shipped in an open consolidation canister as shown in Figure 1.2-10 and assembled in the cask as shown in Figure 1.2-12.
13. Intact PULSTAR fuel elements may be loaded into a fuel rod insert or the PULSTAR screened or failed fuel can.

sealed failed fuel can may be loaded into either a base or a top module (the can length precludes it from being loaded into an intermediate module) of the TRIGA fuel basket assembly. The sealed failed fuel can is a 3.25-inch outside diameter tube with a 0.065-inch thick wall. The bottom of the sealed failed fuel can includes a check valve and drain plug to facilitate draining of the can. The top of the sealed failed fuel can is closed by a bolted lid that is sealed with a metallic O-ring and includes a diaphragm valve to facilitate draining, drying, and helium backfilling of the can. The sealed failed fuel can is constructed of austenitic stainless steels as shown on Drawings 315-40-086, -087, -088.

1.2.3.2 MTR and DIDO Fuel and Basket Description

The MTR fuel elements to be shipped are 33 to 57 inches long, including the upper and lower nonfuel-bearing hardware, which may be removed from the element prior to transport. The fuel plates consist of a U-Al, U_3O_8-Al, or U_3Si_2-Al fuel meat clad with aluminum. The fuel plates are held in a parallel arrangement with two thick aluminum slotted pieces to form a fuel element. The active fuel region is typically 22.75 inches in height, and the fuel meat is typically 0.023-inch thick. MTR elements/plates may contain cadmium wires. A maximum 100-gram cadmium source is addressed in the shielding evaluations documented in Chapter 5.

A maximum of 42 MTR fuel elements has been analyzed for transport in the NAC-LWT cask. This configuration consists of up to seven fuel elements placed radially in each of the six axial fuel basket modules. Two alternate configurations of MTR fuel element loading provide for loads of 35 elements in five basket modules or 28 elements in four basket modules. For the shipment of MTR fuel elements (or an equivalent number of plates in a plate canister) having ^{235}U greater than 470 g per element, or greater than 22 g per plate (up to a maximum of 640 g per element or 32 g per plate), the maximum quantity of elements per basket is limited to four. Therefore, for the transport of elements of greater than 470 g ^{235}U, if one element exceeds the 470 g (22 g per plate) limit, only four elements shall be loaded into the seven-element basket module.

Loose MTR fuel plates may be shipped in an MTR plate canister to facilitate handling. The contents of the canister are limited to the number of plates in the original intact fuel assembly, and the fuel plate dimensions and fuel masses must be bounded by the MTR fuel element limits in Table 1.2-4.

A maximum of 42 DIDO fuel assemblies has been analyzed for transport in the NAC-LWT cask. Again, up to seven fuel assemblies may be placed radially in each of six axial fuel basket modules.

DIDO fuel assemblies are similar to MTR fuel elements in that the fuel bearing hardware consists of plates of fuel meat sandwiched by cladding. However, in DIDO fuel, the plates have been formed into tubular elements that are arranged in a concentric configuration. Typical DIDO assemblies contain four of the concentric tubes.

MTR and DIDO fuel characteristics are presented in Table 1.2-4.

1.2.3.3 General Atomics Irradiated Fuel Material (GA IFM) and Basket Description

The GA IFM is made up of two separate types of fuel material—the High-Temperature Gas-Cooled Reactor (HTGR) type fuel and the Reduced-Enrichment Research and Test Reactor (RERTR) type fuel. Each type of IFM is packaged in its own unique Fuel Handling Unit (FHU). Figures 1.2-7 and 1.2-8 illustrate the HTGR and RERTR FHUs. Detailed drawings for the GA and IFM FHUs are in Section 1.4.

The HTGR IFM is comprised of fuel in four forms: fuel particles (kernels), fuel particles (coatings), fuel compacts (rods), and fuel pebbles. Fuel kernels are solid, spheridized, high-temperature sintered fully-densified, ceramic kernel substrate, composed of: UC_2, UCO, UO_2, $(Th,U)C_2$, or $(Th,U)O_2$. The as-manufactured enrichment of the HTGR fuel varies from ~10.0 to 93.15 wt % ^{235}U. Fuel coatings are solid, spheridized, isotropic, discrete multi-layered fuel particle coatings with chemical composition including pyrolitic-carbon (PyC) and silicon carbide (SiC). Fuel compacts are multi-coated ceramic fuel particles, bound in solid, cylindrical, injection-molded, high-temperature heat-treated compacts. The fuel compact matrix is composed of carbonized graphite shim, coke, and graphite powder. Fuel pebbles are multi-coated fuel particles, bound in solid, spherical injection-molded, high-temperature heat-treated pebbles. The fully-cured binding matrix is composed of carbonized graphite shim, coke , and graphite powder.

The RERTR IFM is comprised of 20 irradiated TRIGA fuel elements; 13 of the elements are intact and the remaining seven have been previously sectioned for examination purposes. Parameters characterizing the RERTR/TRIGA fuel elements are shown in Table 6.2.9-1. Three distinct mass loadings of uranium were used in the 20 TRIGA elements: 20, 30, and 45 wt % U; the average mass of the fueled portion of these elements is 551g with an enrichment of 19.7 wt % ^{235}U. The RERTR IFM consists of U-ZrH metal alloy fuel material and as a solid meets the requirement of 10 CFR 71.63.

Two GA IFM Fuel Handling Units (FHU) are intended for a single shipment in the NAC-LWT. The first IFM FHU contains HTGR type fuel and the second contains RERTR type fuel. Each IFM FHU consists of stainless steel weld-encapsulated primary and secondary enclosures. The FHUs are filled and sealed with air at atmospheric pressure. The two IFM FHUs are placed in

the top of the NAC-LWT cavity with a bottom spacer to facilitate unloading of the IFM packages.

The GA IFM fuel characteristics are presented in Table 1.2-7.

1.2.3.4 PWR Fuel

The NAC-LWT cask is analyzed for the PWR fuel assemblies listed in Table 1.2-5. This table provides the dimensional and enrichment constraints for the PWR fuel. The burnup and decay heat limits are specified in Table 1.2-4.

1.2.3.5 BWR Fuel

The NAC-LWT cask is analyzed for the BWR fuel assemblies listed in Table 1.2-6. This table provides the dimensional constraints for the BWR fuel. The enrichment, burnup and decay heat limits are specified in Table 1.2-4.

1.2.3.6 TPBARs

The NAC-LWT cask is analyzed for the transport of two separate Tritium Producing Burnable Absorber Rod (TPBAR) content configurations. For the transport of production TPBARs from the reactor facility to the DOE processing facility, an open (i.e., unsealed) stainless steel consolidation canister is utilized to contain up to 300 TPBARs, two of which can be prefailed. The characteristics of the production TPBARs are listed in Table 1.2-8. The consolidation canister assembly is shown in Figure 1.2-10.

The second transport configuration is for the shipment of segmented TPBARs, following post-irradiation examination (PIE), contained in a welded stainless steel waste container containing segments and debris from up to 55 TPBARs. The characteristics of the TPBAR PIE segments are provided in Table 1.2-12. The waste container and extension weldment assembly is shown in Figure 1.2-16.

TPBARs are similar in size and nuclear characteristics to standard, commercial PWR, stainless steel-clad burnable absorber rods. The exterior of a typical TPBAR is a stainless steel clad tube. The internal components of the TPBAR are designed and selected to produce and retain tritium. Internal configurations differ for various TPBAR designs (see DOE reports provided in the Chapter 1 Appendices). The internal components of a typical TPBAR include a plenum spacer tube (getter tube), a spring clip or a plenum (compression) spring, pellet stack assemblies (pencils), and a bottom spacer tube. A pencil consists of a zirconium alloy liner around which lithium aluminate absorber pellets are stacked and then confined in a getter tube as shown in Figure 1.2-9. The unclassified design details of the various TPBAR designs are provided in the unclassified DOE documents and drawings provided in the Chapter 1 Appendices.

The transport assembly arrangements for both TPBAR content configurations are identical and include a closure lid spacer assembly, a TPBAR basket and Alternate B port covers with bolting installed. The detailed requirements for the NAC-LWT assembly are provided in license drawing 315-40-128 in Section 1.4. The overall payload arrangement for the NAC-LWT with the consolidation canister and waste container are shown in Figure 1.2-12 and Figure 1.2-17, respectively. For the transport of fewer than 300 TPBARs in the consolidation canister, stainless steel dunnage may be used to align and protect the contents. The weight and volume of the dunnage and the reduced TPBAR contents of the consolidation canister must be less than, or equal to, the weight and volume of 300 TPBARs.

The TPBAR content conditions are analyzed and evaluated for compliance with structural, thermal, containment and shielding conditions of the NAC-LWT in the appropriate SAR chapters. TPBARs do not contain fissile material and, therefore, criticality evaluations have not been performed. The operating procedures for the wet and dry loading and dry unloading of the TPBAR contents are provided in Chapter 7. The special leakage and pressure testing requirements for NAC-LWT casks intended for the transport of TPBAR contents are provided in Chapter 8.

1.2.3.7 Cladding for PWR/BWR Fuel

The PWR and BWR fuel rod cladding is of Zirconium alloy type (Zircaloy-2, Zircaloy-4, Zirlo, M-5, etc.). Minor variations of alloy composition have no impact on performance of cladding material.

1.2.3.8 PULSTAR Fuel Element and Transport Configuration Description

PULSTAR fuel elements are transported in the NAC-LWT in the 28 MTR fuel basket assembly, which contains four modules with seven cells per module. The basket assembly is composed of a top module, a base module, and two intermediate modules (Dwgs 315-40-051, -049, and -050, respectively).

PULSTAR fuel elements may be loaded into the module cells in one of four configurations: a) intact PULSTAR fuel assemblies b) intact PULSTAR fuel elements loaded into the 4×4 TRIGA fuel rod insert (Dwg. 315-40-096); c) intact or damaged PULSTAR fuel elements, fuel debris and nonfuel-bearing components of PULSTAR fuel assemblies in the PULSTAR screened can (Dwg. 315-40-135); or d) intact or damaged PULSTAR fuel elements, fuel debris and nonfuel-bearing components of PULSTAR fuel assemblies in the PULSTAR sealed can (Dwg. 315-40-130). The contents of either can type are restricted to a quantity of fissile material and a total volume of material equivalent to 25 PULSTAR fuel elements. The sealed cask contents are restricted to the displaced volume of 25 intact PULSTAR fuel elements. The total cask payload shall not exceed 700 PULSTAR fuel elements. Loading of modules with mixed PULSTAR

payload configurations is allowed, but PULSTAR cans, either screened or sealed, are restricted to loading in the base and top modules.

PULSTAR fuel elements are low enriched (< 7 wt%) uranium oxide rods, with zirconium alloy cladding. During reactor operation, 25 PULSTAR fuel elements are arranged in a rectangular 5×5 lattice, surrounded by a zirconium alloy box, and capped by top- and bottom-end fittings to form a PULSTAR fuel assembly. The nonfuel components of a PULSTAR fuel assembly are primarily aluminum and zirconium alloy and do not contain a significant activation source. A sketch of a PULSTAR fuel assembly is provided in Figure 1.2-13. Key physical, radiation protection and thermal characteristics of the PULSTAR fuel assembly/elements are listed in Table 1.2-9.

The sealed and screened PULSTAR cans are stainless steel containers that: a) minimize the dispersal of gross fuel particles that may escape from damaged fuel element cladding and/or fuel debris; b) facilitate retrieval of the contents from the transportation cask; and c) confine damaged fuel and/or debris within a known volume to facilitate criticality control, maintain dose limits, and control thermal loads within the cask. PULSTAR fuel pellets, pieces, and debris may be placed in an encapsulating rod for handling purposes prior to placement into either a sealed or screened can. The encapsulating rod is not required and has no safety significance. In addition to fuel elements, the cans may contain fuel assembly hardware up to the total content weight limit specified in Table 1.2-9. For operational/retrievability purposes, stainless steel rod inserts may be used to position the PULSTAR fuel elements within the fuel rod insert. Total content weight shall not exceed the total weight limit specified in Table 1.2-9. The fuel rod insert is composed of a 4×4 grid of 0.75-inch OD × 0.065-inch wall stainless steel tubes. The tubes provide structural support for individual intact PULSTAR fuel elements during transport in the NAC-LWT.

Spacers may be used to axially position PULSTAR fuel contents near the top of the module for ease of loading and unloading operations. The spacers are provided for ease of operations and do not provide a safety function.

1.2.3.9 ANSTO Basket and Payload Description

Two basic fuel types are to be transported in the ANSTO baskets within the NAC-LWT cask: spiral fuel assemblies and MOATA plate bundles. Spiral fuel assemblies are composed of cylindrical aluminum inner and outer shells connected by curved metallic fuel plates. Further detail on the spiral fuel assemblies is provided in Section 1.2.3.9.1. MOATA plate bundles are comprised of up to 14 MTR fuel plates. Further detail on the plate bundles is provided in Section 1.2.3.9.2. Spiral fuel assemblies and MOATA plate bundles shall be intact. Note that spiral

assemblies may be cropped by removing nonfuel-bearing hardware to fit within the basket tubes. Cropped spiral fuel assemblies are classified as intact fuel.

Up to 42 spiral fuel assemblies or 42 MOATA plate bundles may be loaded. A full cask load contains 6 baskets of up to 7 fuel assemblies or plate bundles per basket. The mixed loading of ANSTO basket modules containing either spiral fuel assemblies or MOATA plate bundles is authorized.

1.2.3.9.1 Spiral Fuel Assemblies

The design basis characteristics of spiral fuel assemblies are presented in Table 1.2-10. The fuel material in spiral fuel assembly plates is a solid, homogeneous mixture of uranium-aluminum alloy, i.e., a metal alloy fuel. The fuel meat of each plate is clad in aluminum. A set of 10 curved fuel plates is located between an inner and outer cylindrical aluminum shell. Fuel elements are cropped to fit axially within the basket envelope. Fuel material is not cut during the cropping operation. The fuel plates are located in a spiral pattern, maintaining a constant pitch between fuel plate centers. A sketch of the assembly cross-section is provided in Figure 1.2-14.

1.2.3.9.2 MOATA Plate Bundles

The design basis characteristics of MOATA plate bundles are presented in Table 1.2-11. The fuel material in the plate bundle is a solid, homogeneous mixture of uranium-aluminum alloy, i.e., a metal alloy fuel. Each plate is clad in aluminum. A plate bundle is comprised of up to 14 fuel plates. Two thick (0.635 cm) aluminum nonfuel side plates support the fuel plate stack from two sides, making a possible total of 16 plates per bundle. At each axial end, the plates in the stack are connected by a pin. Spacing between plates is maintained by disk spacers placed onto the top and bottom pins between each fuel plate and the aluminum side plates. A sketch of a typical MOATA plate bundle is provided in Figure 1.2-15.

Figure 1.2-1 Aluminum Clad TRIGA Fuel Element

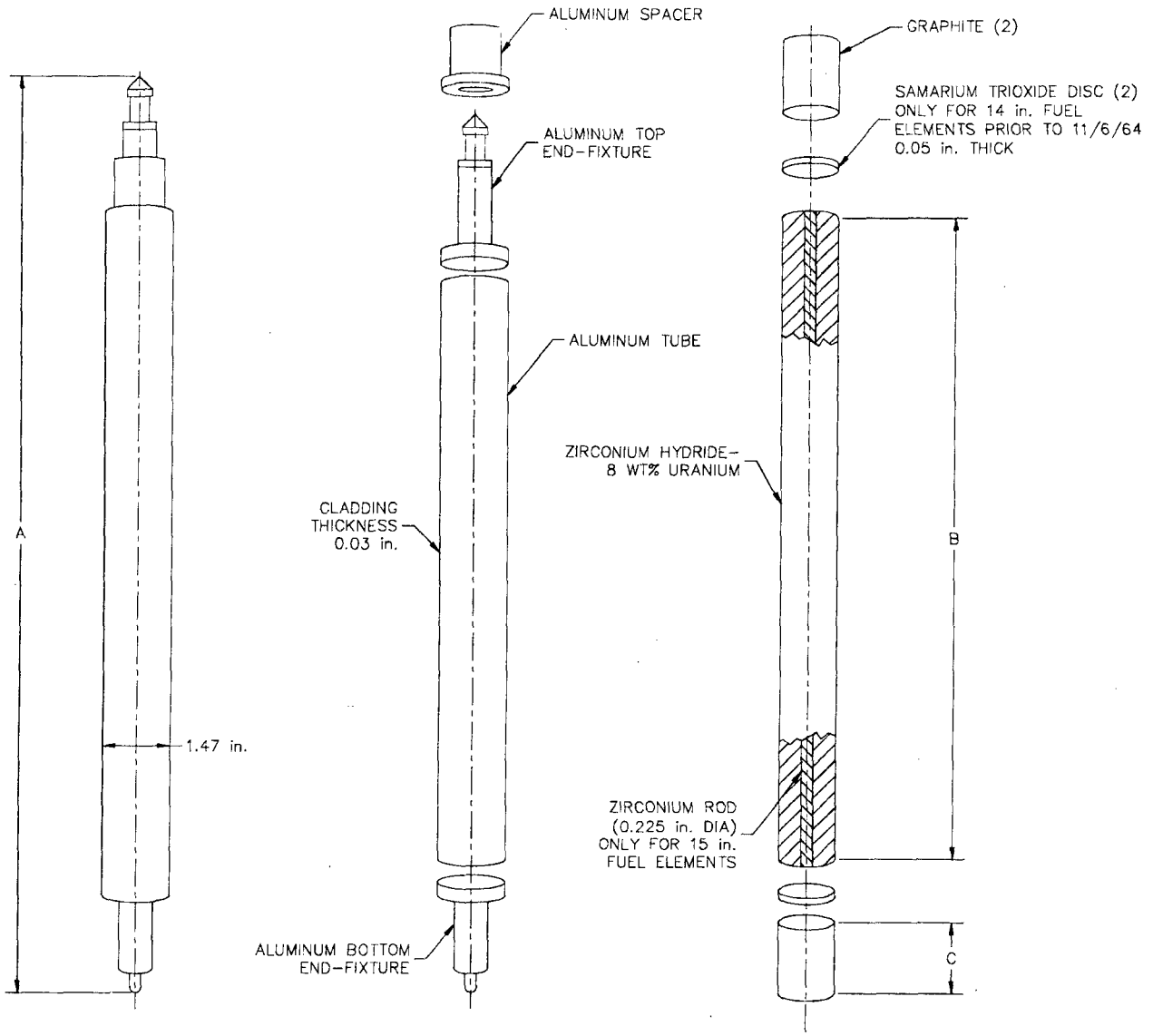

Figure 1.2-2 Aluminum Clad Instrumented Fuel Element

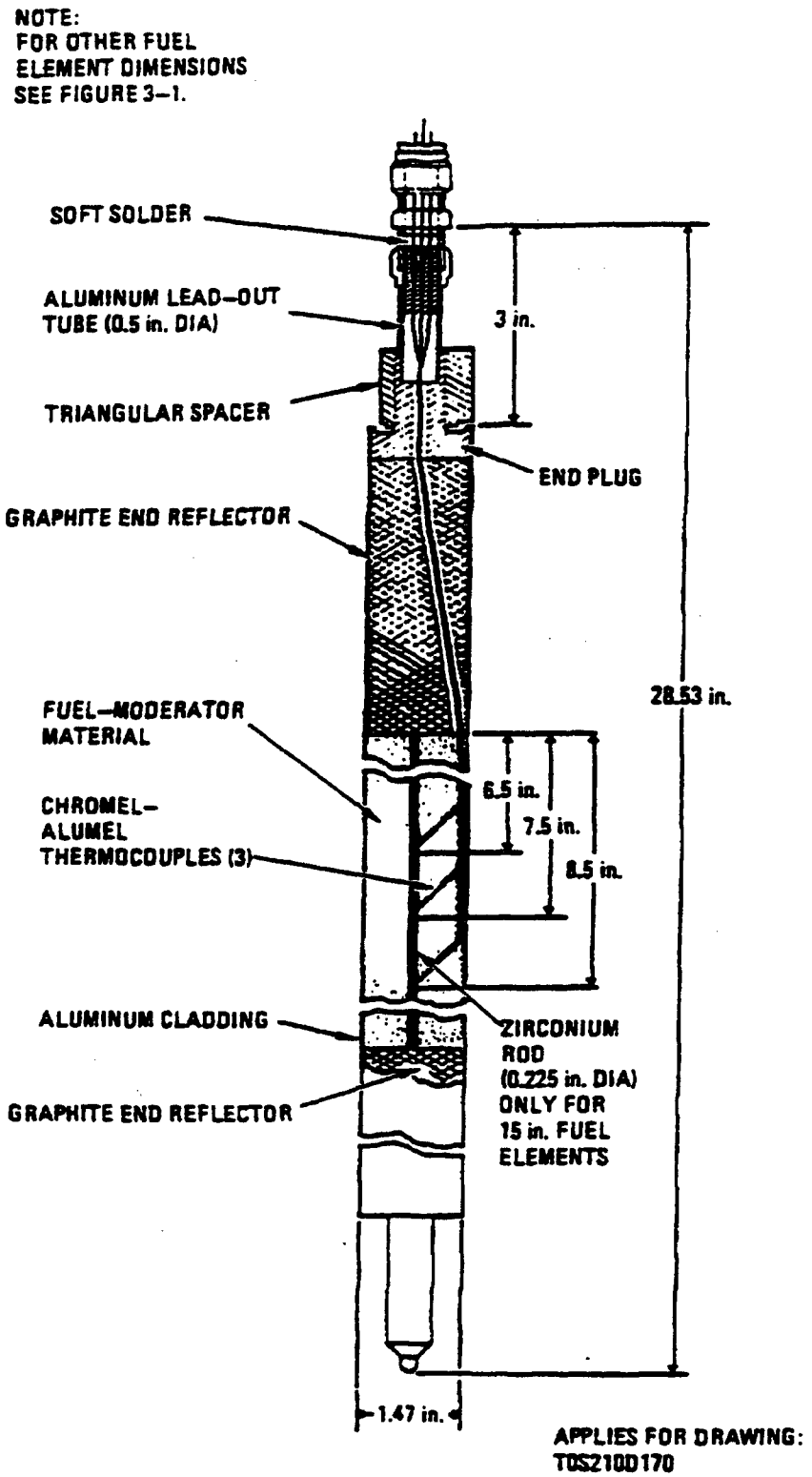

Figure 1.2-3 Stainless Steel Clad TRIGA Fuel Element

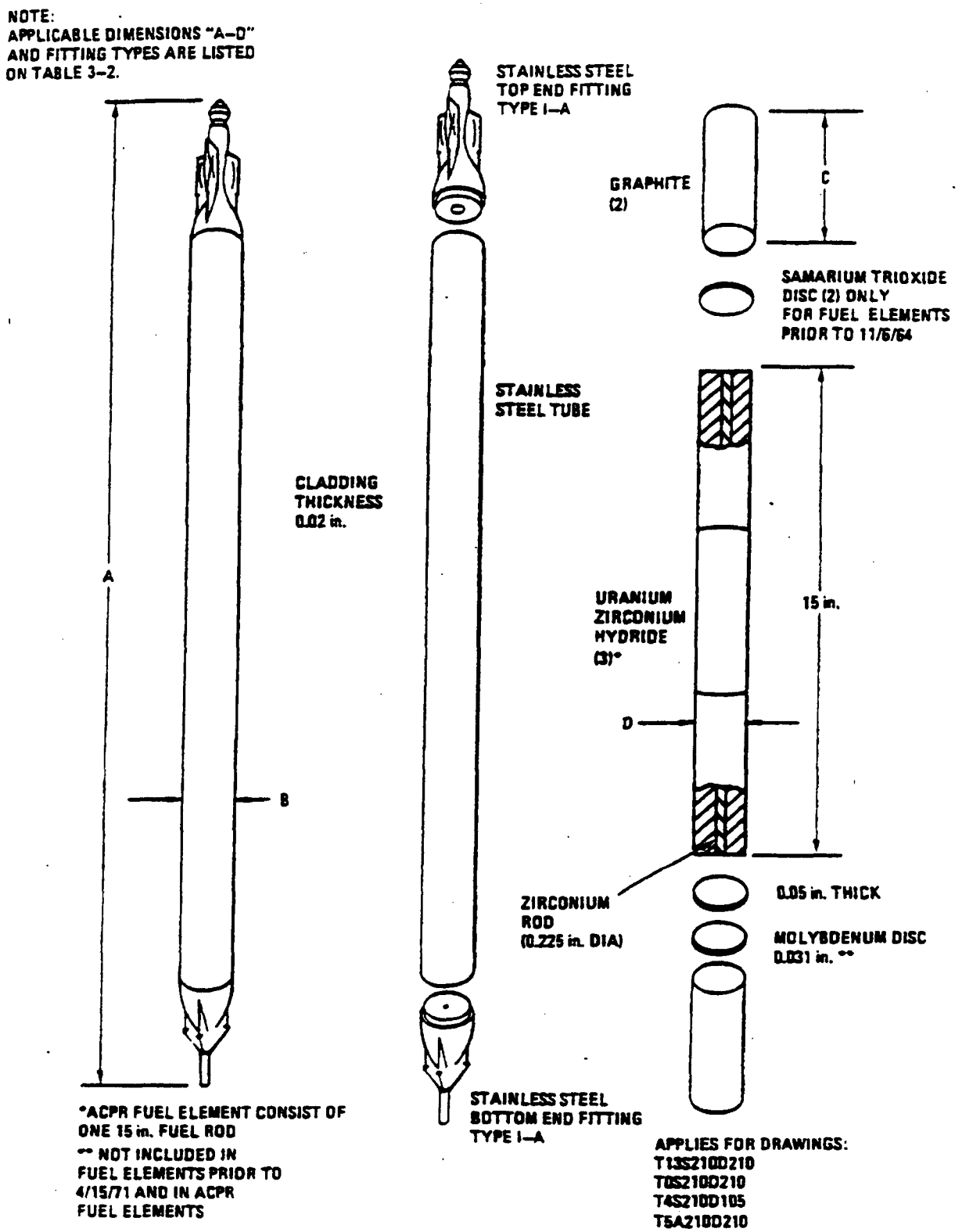

Figure 1.2-4 Stainless Steel Clad Instrumented Fuel Element

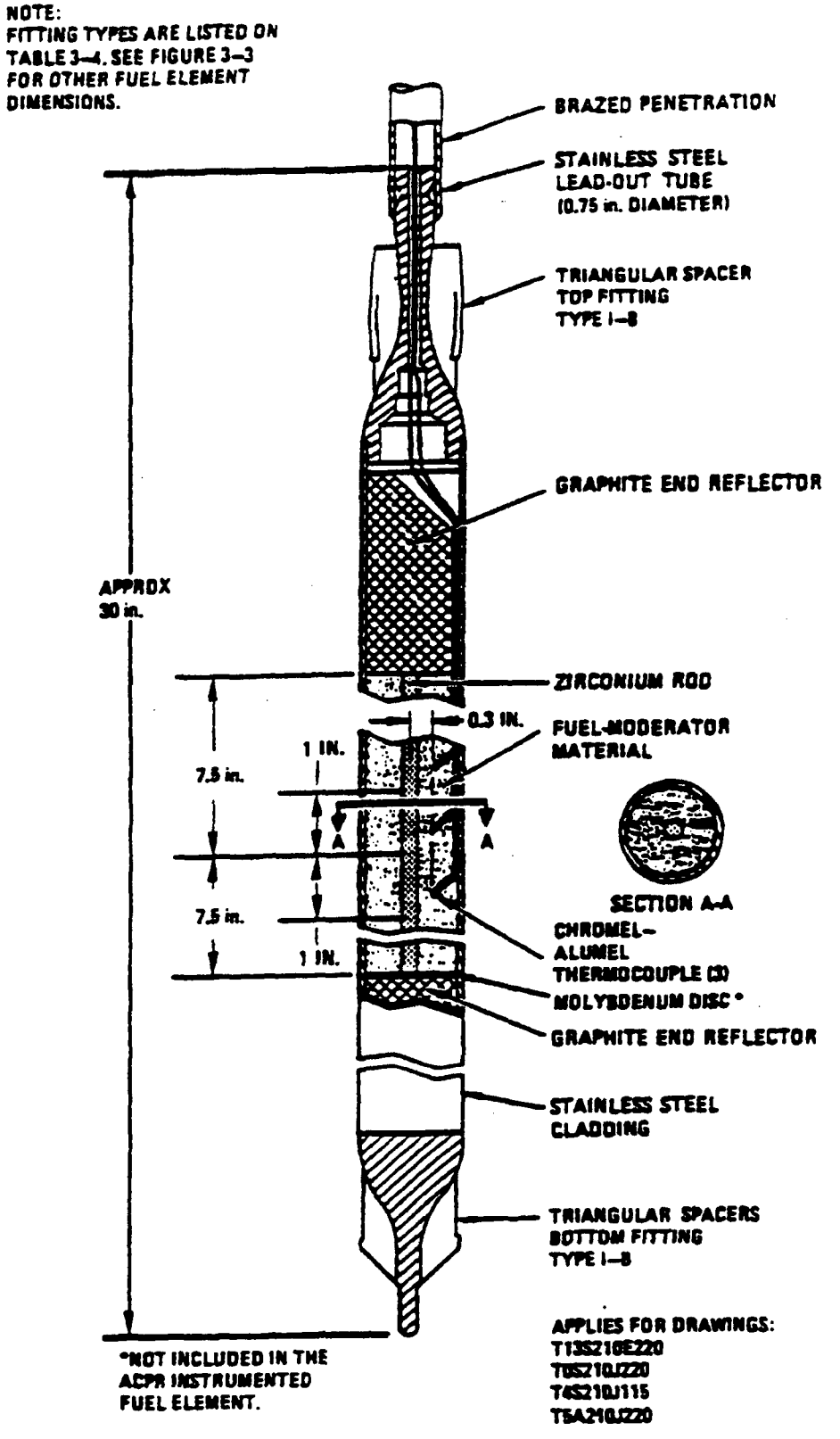

Figure 1.2-5 Standard Fuel Follower Control Rod Element

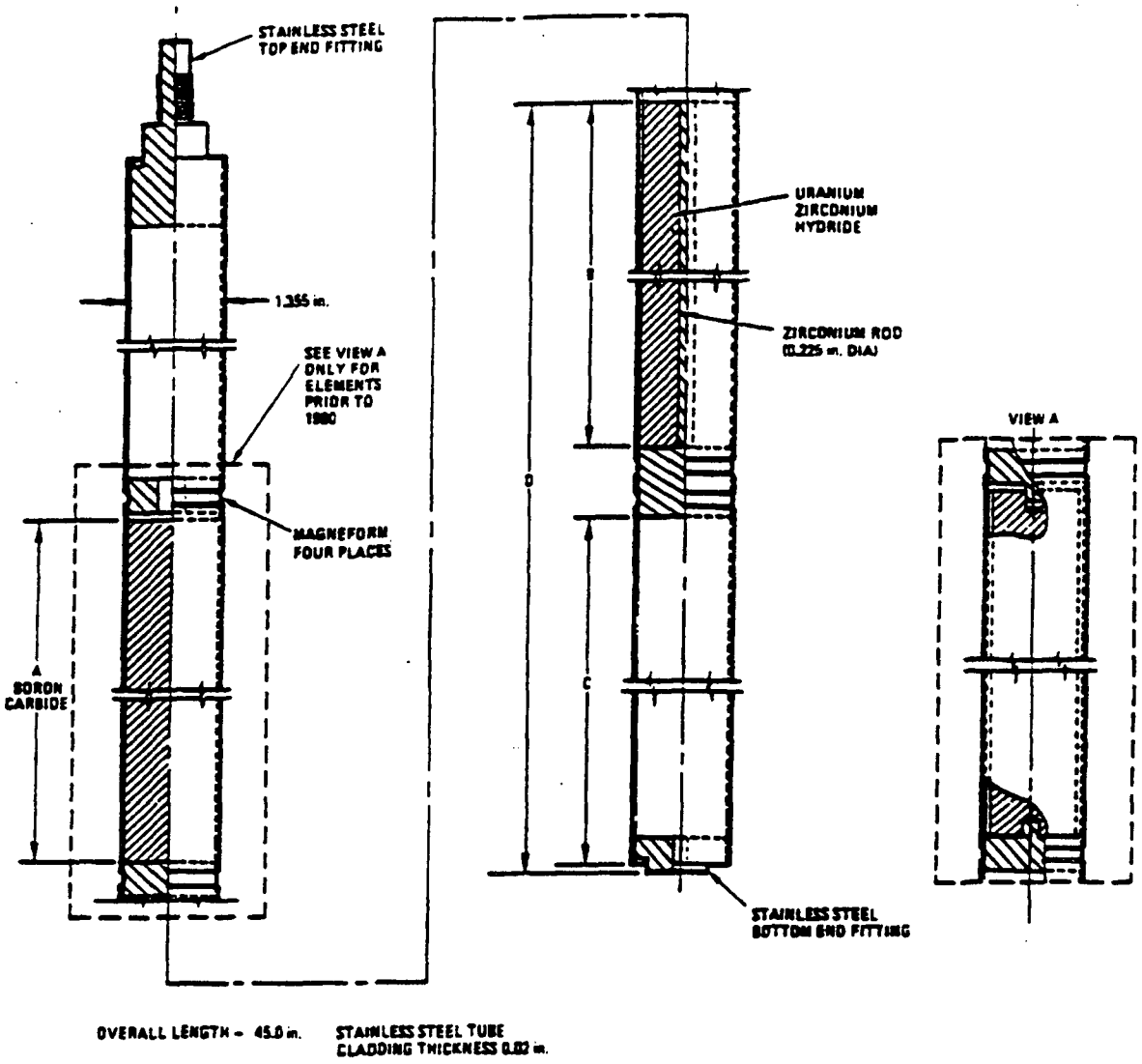

Figure 1.2-6 TRIGA Fuel Cluster and Rod Details

TRIGA *FUEL CLUSTER*

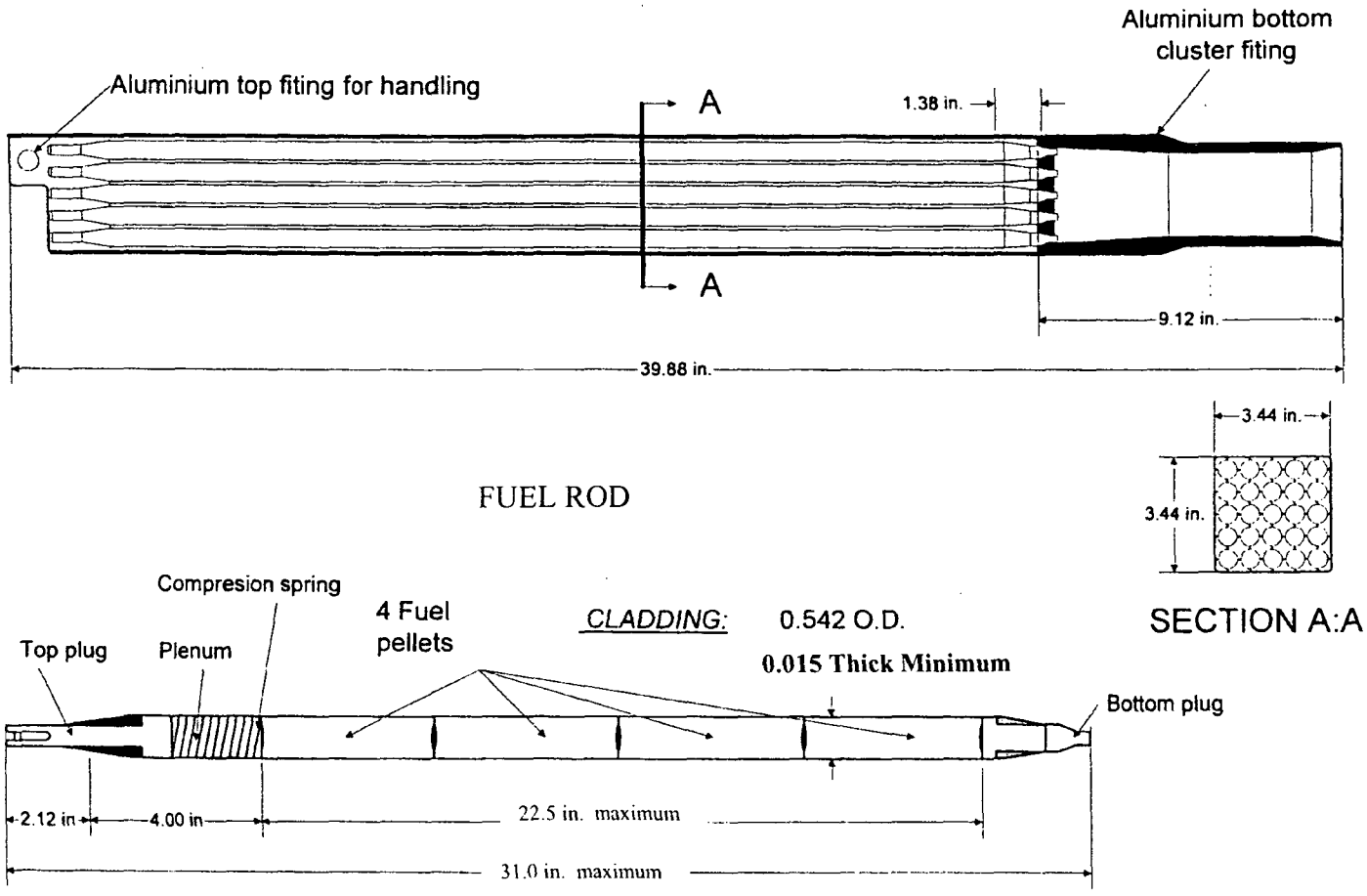

Fuel bundle and fuel element

Figure 1.2-7 HTGR Fuel Handling Unit

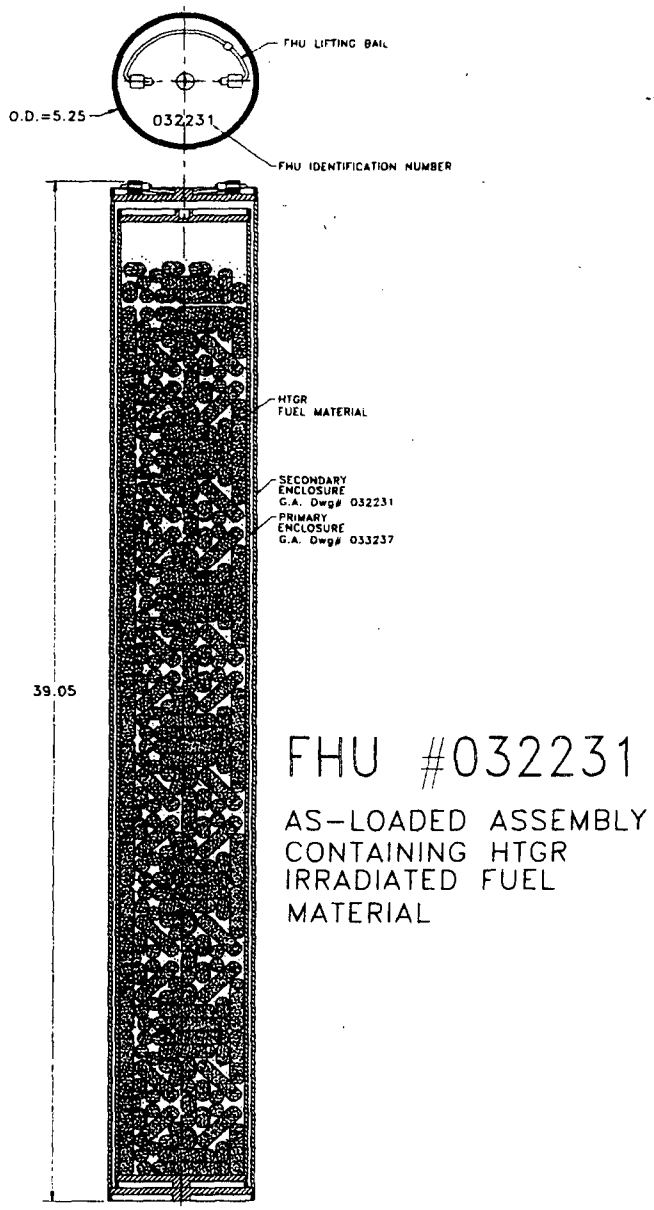

Figure 1.2-8 RERTR Fuel Handling Unit

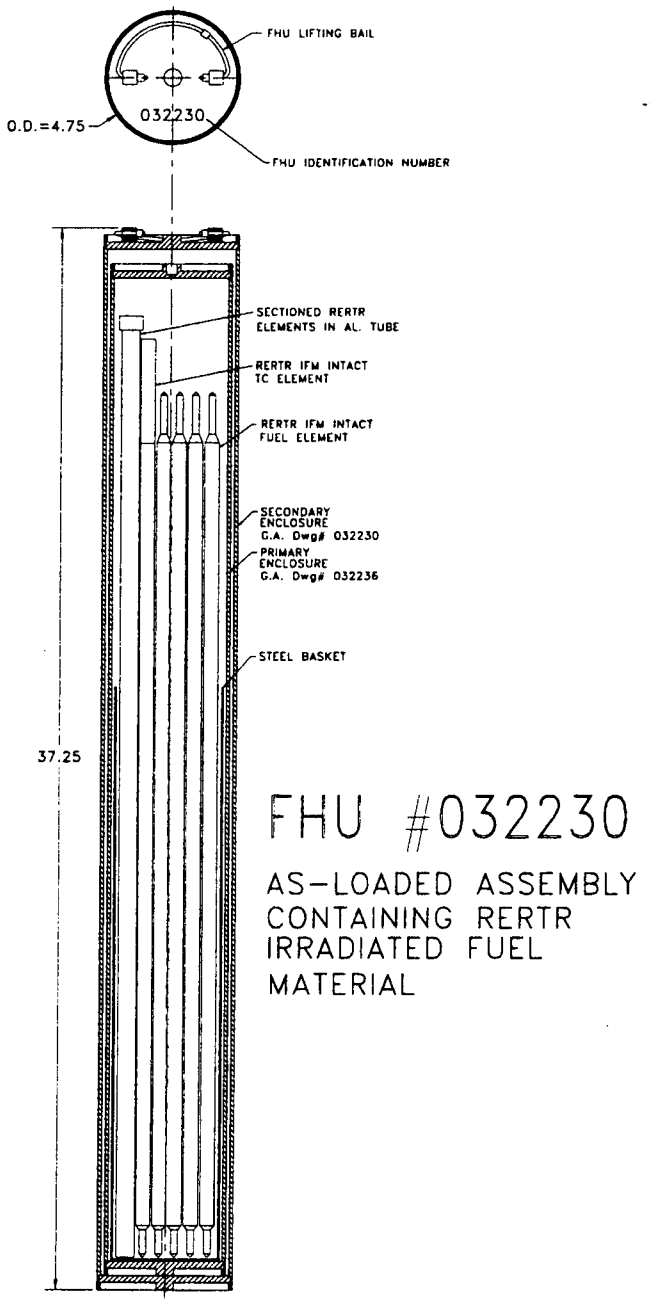

Figure 1.2-9 Typical TPBAR Assembly

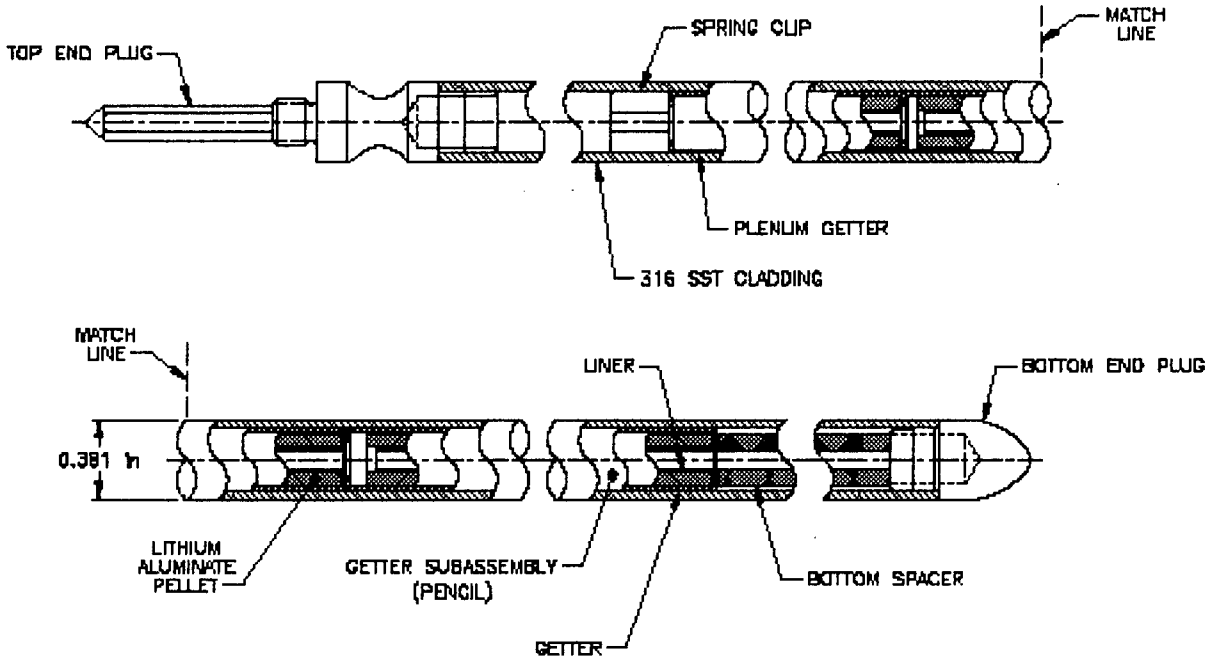

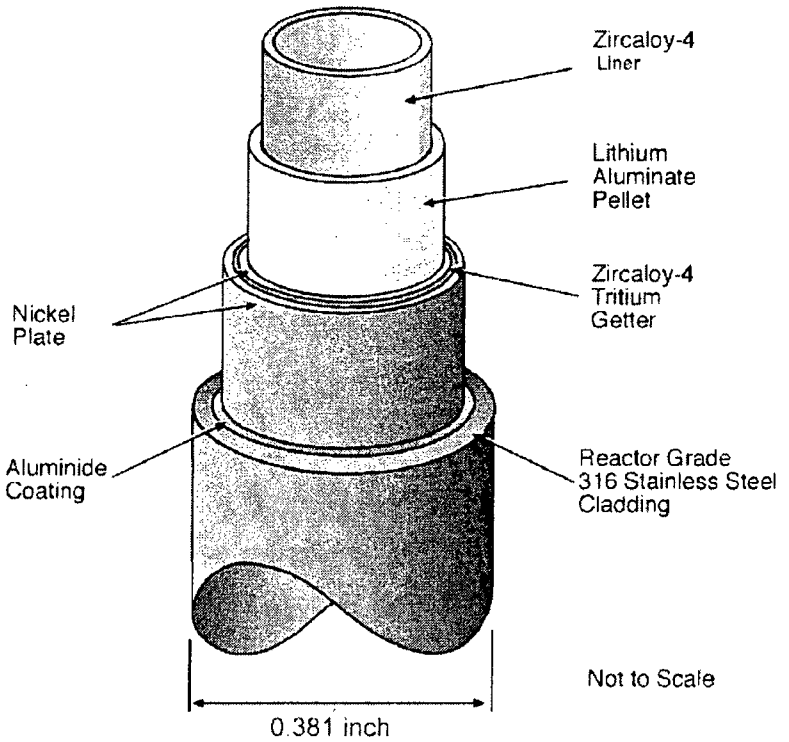

Figure 1.2-10 TPBAR Consolidation Canister Sketch

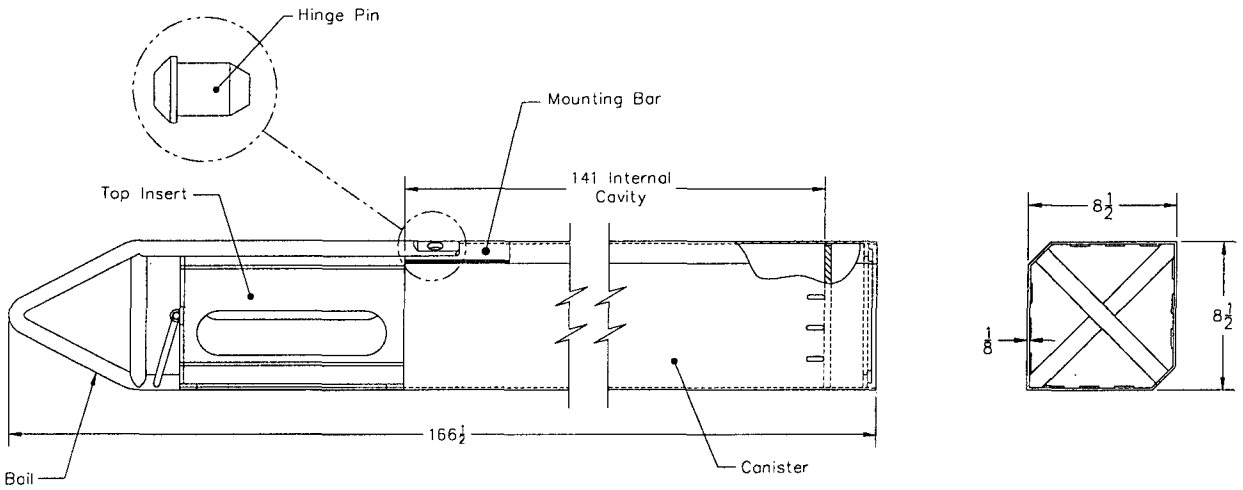

Conceptual Layout with Approximate Dimensions

Note: Material of construction is stainless steel.

Figure 1.2-11 Failed PWR/BWR Fuel Rod Capsule

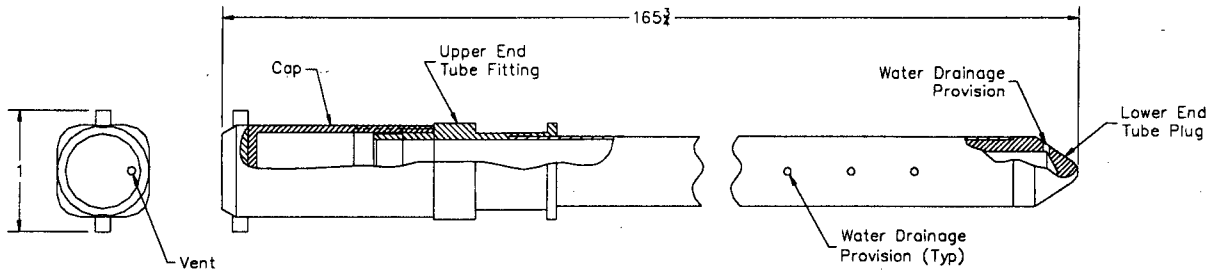

Failed Fuel Rod Capsule Conceptual Layout

All Dimensions Approximate

Note: Material of construction is stainless steel.

Figure 1.2-12 NAC-LWT with TPBAR Consolidation Canister Payload

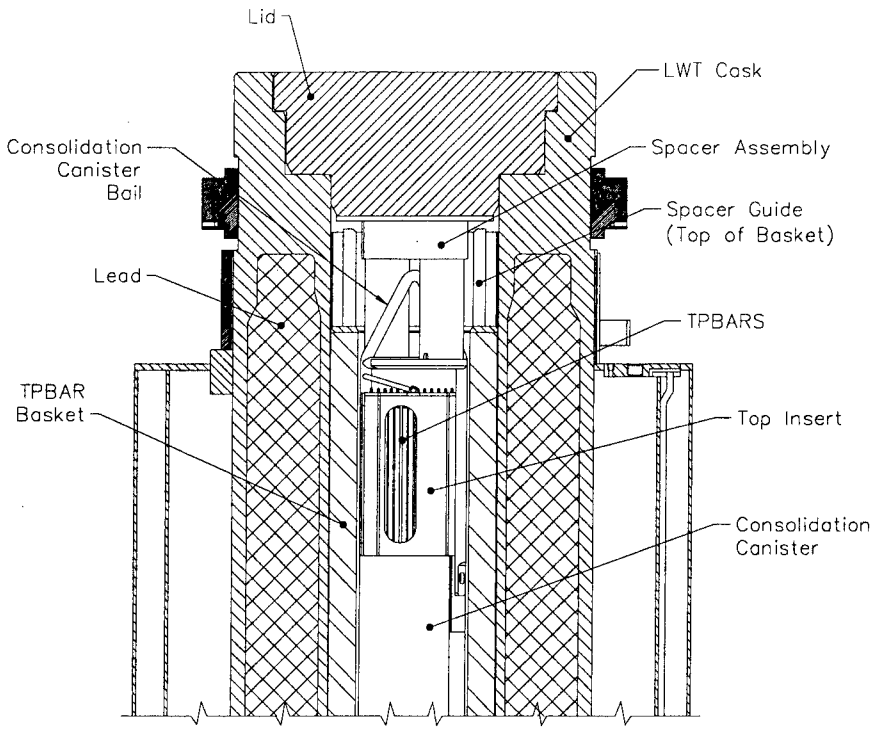

Figure 1.2-13 PULSTAR Fuel Assembly

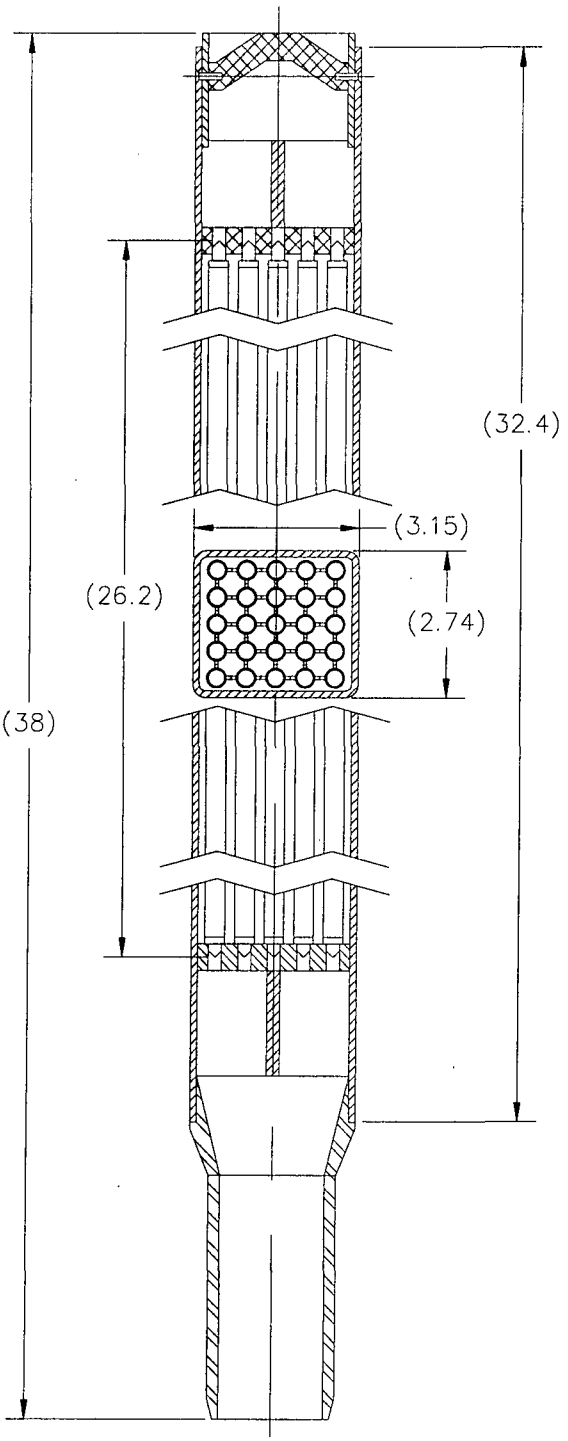

Figure 1.2-14 Spiral Fuel Assembly Cross-Section Sketch

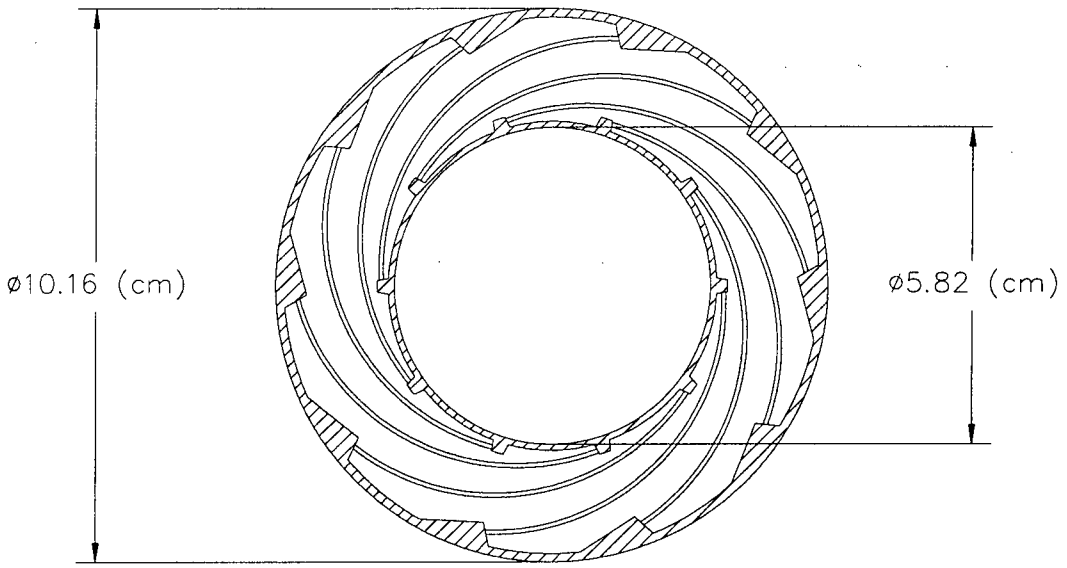

Note: Nominal dimensions

Figure 1.2-15 MOATA Plate Bundle Sketches

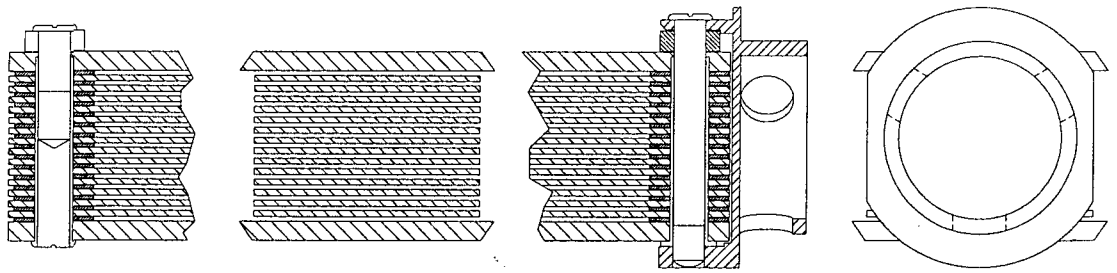

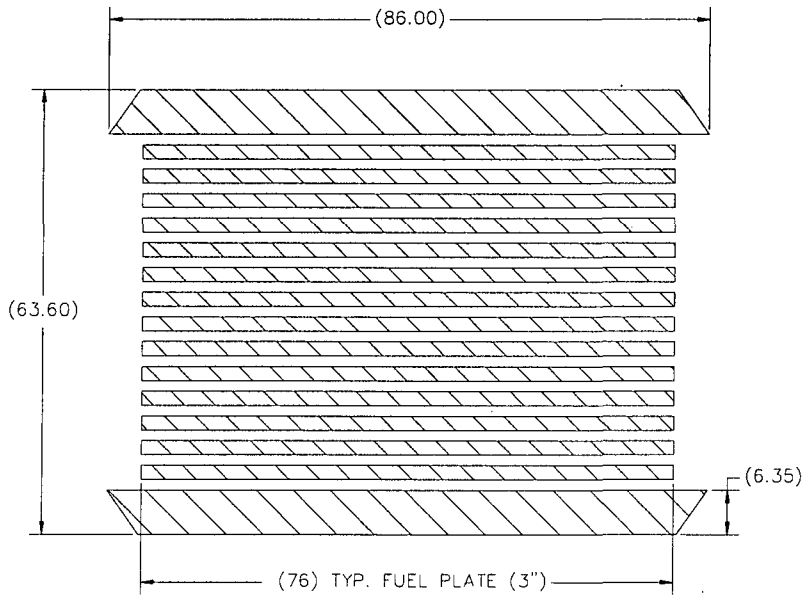

Note: 14-plate bundle configuration. Dimensions are reference values. Bundles with a reduced number of plates retain the plate pitch and compensate by wider side plates and outside spacers to retain overall bundle dimensions.

Figure 1.2-16 TPBAR Waste Container and Extension Weldment Sketch

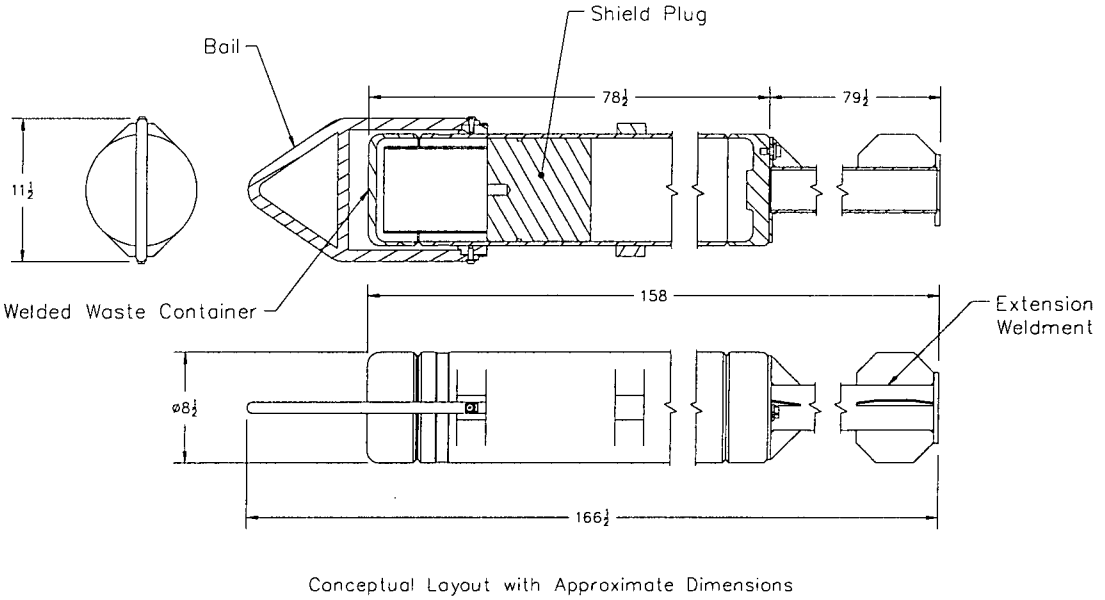

Note: Material of construction is stainless steel.

Figure 1.2-17 NAC-LWT with TPBAR Waste Container Payload

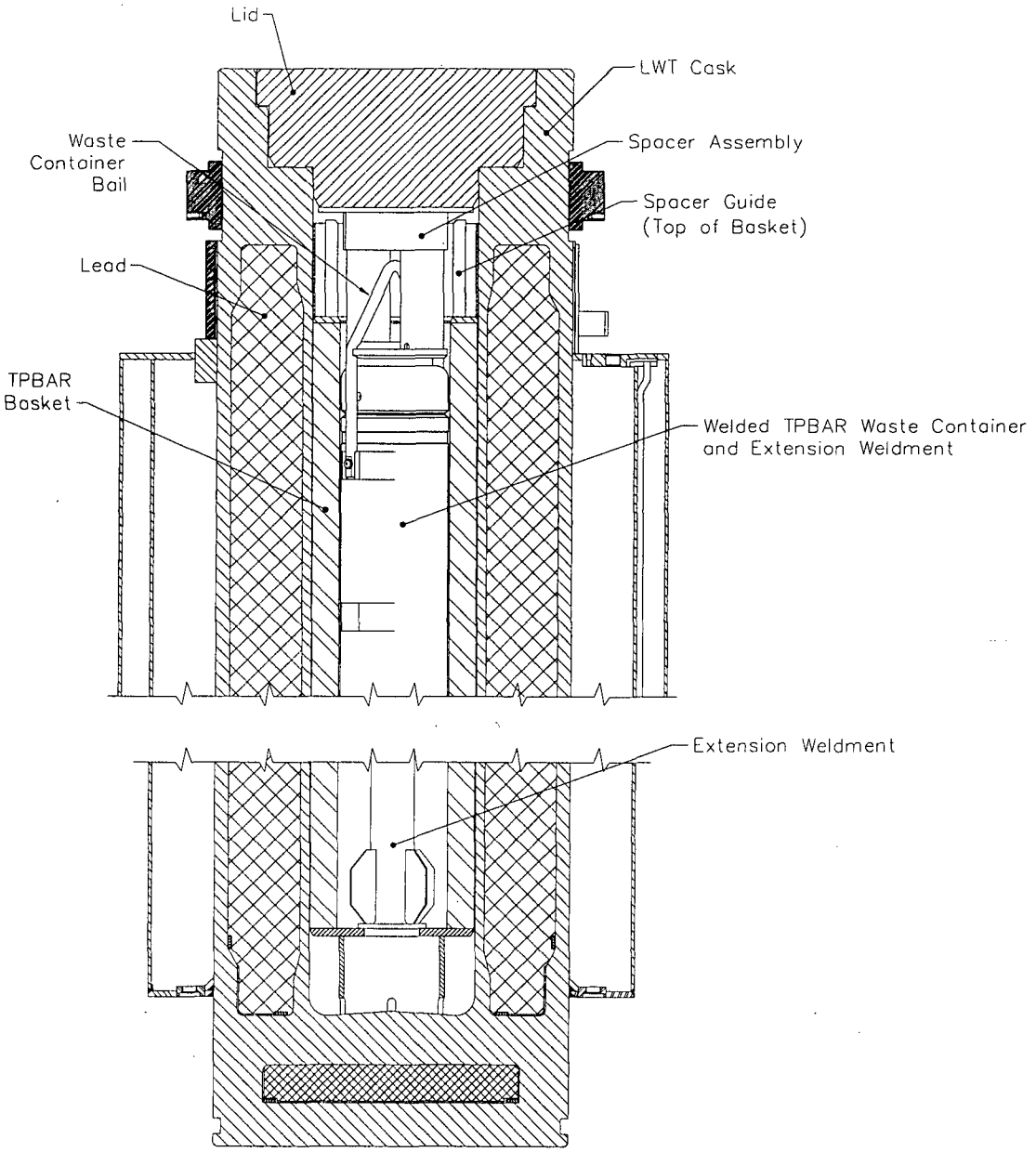

Table 1.2-1 Characteristics of Design Basis TRIGA Fuel Elements

Element Type	Al Clad	ACPR[1]	Steel Clad	Fuel Follower Standard Control Rod[2]
Element Diameter (in.)	1.47	1.478	1.478	1.355
Element Length(in.)	28.4[3] 28.3[4]	28.89	29.7[5] 28.9[6]	45
Active Length (in.)	14[3] 15[4]	15	15	15
Graphite Reflector (in.)	3.53	3.45	2.56, 3.72[5] 3.42[6]	-
Clad Material	Al	SS304	SS304	SS304
Clad Thickness (in.)	0.03	0.02	0.02	0.02
Fuel Material	U-ZrH	U-ZrH	U-ZrH	U-ZrH
Pellet Diameter (in.)	1.41	1.40	1.435	1.311[7]
Maximum Weight (kg)	2.9	4.0	3.4	6.0

[1] Annular Pulse Core Reactor.
[2] Fuel follower control rod has an uppermost 6.5-inch air void section, a 15-inch boron carbide upper section, a 15-inch U-ZrH fuel section, and 5.88-inch lower void section.
[3] Al clad fuel with 14-inch active fuel has no central hole with Zircaloy rod.
[4] Al clad fuel 15-inch active fuel has a central hole with Zircaloy rod.
[5] Steel clad standard streamline fuel has 2.56 and 3.72-inch upper and lower graphite reflectors.
[6] Steel clad standard plain fuel has 3.42-inch upper and lower graphite reflectors.
[7] Fuel meat diameter.

Table 1.2-2 Characteristics of Design Basis TRIGA Fuel Elements – Fuel Compositions

Element Type	Al Clad	Steel Clad					Fuel Follower Control Rod		
		ACPR	Stand.	FLIP[1]	FLIP LEU-I	FLIP LEU-II	Stand.	FLIP LEU-I	ACPR
U in U-ZrH (max. wt %)	8.5	12.5	12	8.5	20	31	8.5	8.5	12.5
^{238}U- Mass (g)	164	224	164	59	403	676	150	387	224
^{235}U in U (wt %)	20	20	20	70	20	20	20	20	20
^{235}U-Mass (g)	41	56	41	137	101	169	38	97	56
H to Zr Ratio	1	1.7	1 - 1.7	1.6	1.6	1.6	1.6	1.6	1.7
Max. Zr Mass (g)	2300	1962	2300	2060	1988	1886	2004	1908	1962

Table 1.2-3 Characteristics of Design Basis TRIGA Fuel Cluster Rods

Element Type	TRIGA Fuel Cluster Rod
Rod Diameter (in.)	0.542
Max. Rod Length (in.)	31.0
Max. Active Length (in.)	22.5
Clad Material	Incoloy 800
Min. Clad Thickness (in.)	0.015
Fuel Material	U-ZrH
Max. Pellet Diameter (in.)	0.53
Maximum Rod Weight (kg)	0.65
U in U-ZrH (wt %)	10.2
^{235}U in U (wt %)	93.3
^{235}U Mass (g)	45.4
H to Zr Ratio	1.6
Zr Mass (g)	421

[1] FLIP - Fuel Life Improvement Program.

Table 1.2-4 Fuel Characteristics

Parameter	PWR Fuel Assembly	BWR Fuel Assemblies	PWR Rods	High Burnup PWR Rods	High Burnup BWR Rods 7 × 7	High Burnup BWR Rods[1] 8 × 8[2]
Maximum Number of Assemblies, Elements or Rods	[1]	[2]	25 rods	25 rods	25 rods	25 rods
Maximum Overall Weight, lbs	1650	750	N/A	N/A	N/A	N/A
Maximum Overall Length, in	178.25	176.1	162	162	176.1	176.1
Maximum Active Fuel Length, in	150	150	150	150	150	150
Fuel Rod Cladding	Zirc	Zirc	Zirc	Zirc	Zirc	Zirc
Maximum Uranium, kg U	475	198	58.2	65.6	198	198
Maximum Initial ^{235}U, wt %	*See below*[3]	4.0	5.0	5.0	5.0	5.0
Maximum Burnup, MWD/MTU	35,000	30,000	60,000[4]	80,000	60,000 - 80,000	80,000
Maximum Unit Decay Heat, kW	2.5	1.1	0.564	0.92	0.84	0.84
Maximum Cask Decay Heat, kW	2.5	2.2	1.41	2.3	2.1	2.1
Minimum Cool Time, yr	2	2	150 days	150 days	210 - 270 days[5]	150 days

[1] High burnup rods are loaded in a fuel assembly lattice or rod holder. Up to 14 rods, loaded in a rod holder, may be classified as damaged. The lattice may be irradiated.
[2] Includes rods from all larger BWR assembly arrays (e.g., 9 × 9, 10 × 10).
[3] See Table 1.2-5 for maximum PWR fuel enrichment by fuel type.
[4] Up to 2 of the 25 PWR rods may have a maximum burnup of 65,000 MWD/MTU.
[5] Minimum cool time for high burnup BWR 7 x 7 rods is determined by extent of burnup. See Section 5.3.8 and Table 5.3-56.

Table 1.2-4 Fuel Characteristics (Continued)

Parameter	Metallic Fuel	Metallic Fuel	Metallic Fuel	MTR HEU	MTR MEU	MTR LEU	TRIGA LEU Element	TRIGA HEU Element	TRIGA Cluster Rod
Maximum Number of Assemblies, Elements or Rods	15 rods (sound)	9 rods (failed)	3 rods (severely failed in filters)	42 [1]	42	42[7]	140	140	560
Maximum Overall Weight, lbs	1805	1805	1805	30 (max)	30 (max)	30 (max)	13.2 (max)	8.82 (nom.) 13.2 (max)	1.5
Maximum Overall Length, in	120.5	120.5	120.5	25.4[2]	26.1[2]	26.1[2]	45	45	31.0
Maximum Active Fuel Length, in	120.0	120.0	120.0	24.8	25.6	25.6	15	15	22.5
Fuel Rod Cladding	Al	Al	Al	Al	Al	Al	Al or SS	Al or SS	Incoloy 800
Maximum Uranium, kg U	54.5	54.5	54.5	0.422 0.511	0.950	2.474 3.368[7]	0.824	0.196	0.0486
Maximum Initial ^{235}U, wt %	Natural	Natural	Natural	94	94[3]	25	20	70	93.3
Maximum Burnup, MWD/MTU	1,600	1,600	1,600	Variable up to 660,000[4]	Variable up to 293,300	Variable up to 139,300	151,100 (80% ^{235}U)	460,000 (80% ^{235}U)	600,000 (80% ^{235}U)
Maximum Unit Decay Heat, kW	0.036	0.036	0.036	Variable[5]	0.030[5]	0.030[5]	0.0075	0.0075	0.001875
Maximum Cask Decay Heat, kW	0.54	0.54	0.54	1.26	1.26	1.26	1.05	1.05	1.05
Minimum Cool Time, yr	1	1	1	Variable[5]	Variable[5]	Variable[5]	Variable[6]	Variable[6]	Variable[6]

1 For NISTR fuel, 42 elements may be cut in half, producing 84 fuel-bearing pieces. Each fuel-bearing piece may contain up to 0.211 kgU.
2 For MTR fuel elements, which are cut to remove nonfuel-bearing hardware prior to transport, a nominal 0.28 inch of nonfuel hardware will remain above and below the active fuel region to allow for fuel handling operations. The HFBR element, with an element length of 57.24 inches, must be cut prior to shipment.
3 Typical MEU enrichment is 45 wt% ^{235}U. Criticality analysis supports up to 94 wt% under the MEU fuel definition.
4 Maximum burnup is 660,000 MWD/MTU for 380g ^{235}U and 577,500 MWD/MTU for 460g ^{235}U.
5 Minimum cool times for MTR fuel, down to 90 days, shall be determined using the procedure presented in Section 7.1.5.
6 Minimum cool times for TRIGA fuel elements and fuel cluster rods, down to 90 days, are determined so that the maximum decay heat of any element to be shipped is 7.5 watts and any fuel cluster rod is 1.875 watts.
7 MTR fuel elements having ^{235}U content >470 g (>22 g per plate) are limited to a total of 4 elements in a 7-element basket. Therefore, depending on the number of such 4-element baskets, the maximum number of elements per cask will be reduced accordingly.

Table 1.2-4 Fuel Characteristics (Continued)

Parameter	DIDO HEU	DIDO MEU	DIDO LEU
Number of Fuel Cylinders per Assembly	4	4	4
Maximum Overall Weight (lb)	15	15	15
Minimum Plate Thickness, in	0.051	0.051	0.051
Minimum Clad Thickness (Al), in	0.00984	0.00984	0.00984
Maximum ^{235}U per Element, g	190	190	190
Maximum Initial ^{235}U, wt %	94	94	94
Minimum Initial ^{235}U, wt %	90	40	19
Maximum Uranium, kg U	0.2111	0.4750	1.0000
Minimum Active Fuel Height, in	23.13	23.13	23.13
Minimum Element Height[1], in	24.21	24.21	24.21
Maximum Burnup, MWD/MTU	577,460	256,650	121,910
Maximum Unit Decay Heat[2], kW	0.025	0.025	0.025
Maximum Cask Decay Heat, kW	1.05	1.05	1.05
Minimum Cool Time[3], yr	Variable	Variable	Variable

1 Element height provides for spacing of fissile material. An optional spacer may be used to maintain spacing if the element is cut shorter than 24.21 inches.
2 Maximum unit decay heat of 0.025 kW allowed only in conjunction with spacers for top basket (see Section 7.1.4), otherwise the limit is 0.018 kW.
3 Minimum cool times for DIDO fuel assemblies, down to 180 days, shall be determined using the procedure presented in Section 7.1.4.

Table 1.2-5 PWR Fuel Characteristics

Fuel Type	No. of Fuel Rods	Max. Assembly Length (in.)	Max. Assembly Weight (lb)	Max. Enrich. (w/o)	Max. MTU	Pitch (in.)	Rod Dia. (in.)	Clad Thick. (in.)	Pellet Dia.(in.)	Max. Active Length (in.)
B&W 15 × 15	208	165.63	1515	3.5	0.4750	0.5680	0.430	0.0265	0.3686	144.0
B&W 17 × 17	264	165.72	1505	3.5	0.4658	0.5020	0.379	0.0240	0.3232	143.0
CE 14 × 14	176	157.00	1270	3.7	0.4037	0.5800	0.440	0.0280	0.3765	137.0
CE 16 × 16	236	178.25	1430	3.7	0.4417	0.5060	0.382	0.0250	0.3250	150.0
WE 14 × 14 Std	179	159.71	1302	3.7	0.4144	0.5560	0.422	0.0225	0.3674	145.2
WE 14 × 14 OFA	179	159.71	1177	3.7	0.3612	0.5560	0.400	0.0243	0.3444	144.0
WE 15 × 15	204	159.71	1472	3.5	0.4646	0.5630	0.422	0.0242	0.3659	144.0
WE 17 × 17 Std	264	159.77	1482	3.5	0.4671	0.4960	0.374	0.0225	0.3225	144.0
WE 17 × 17 OFA	264	160.10	1373	3.5	0.4282	0.4960	0.360	0.0225	0.3088	144.0
Ex/ANF 14 × 14 WE	179	160.13	1271	3.7	0.3741	0.5560	0.424	0.0300	0.3505	144.0
Ex/ANF 14 × 14 CE	176	157.24	1292	3.7	0.3814	0.5800	0.440	0.0310	0.3700	134.0
Ex/ANF 15 × 15 WE	204	159.70	1433	3.7	0.4410	0.5630	0.424	0.0300	0.3565	144.0
Ex/ANF 17 × 17 WE	264	159.71	1348	3.5	0.4123	0.4960	0.360	0.0250	0.3030	144.0

Table 1.2-6 BWR Fuel Characteristics

Fuel Type	No. of Fuel Rods	No. of Water Rods	Max. Assembly Length (in.)	Max. Assembly Weight (lb)	Max. MTU	Pitch (in.)	Rod Dia. (in.)	Clad Thick. (in.)	Pellet Dia. (in.)	Max. Active Length (in.)
GE 7 × 7	49	0	175.9	678.9	0.1923	0.738	0.563	0.037	0.477	146
GE 8 × 8-1	63	1	175.9	681.0	0.1880	0.640	0.493	0.034	0.416	146
GE 8 × 8-2	62	2	175.9	681.0	0.1847	0.640	0.483	0.032	0.410	150[1]
GE 8 × 8-4	60	4	176.1	665.0	0.1787	0.640	0.484	0.032	0.410	150[1,2]
GE 9 × 9	74	2[3]	176.1	646.0	0.1854	0.566	0.441	0.028	0.376	150[1,4]
	79	2	176.1	646.0	0.1979	0.566	0.441	0.028	0.376	150[1,4]
Ex/ANF 7 × 7	49	0	171.3	619.1	0.1960	0.738	0.570	0.036	0.490	144
Ex/ANF 8 × 8-1	63	1	171.3	562.3	0.1764	0.641	0.484	0.036	0.4045	145.2
Ex/ANF 8 × 8-2	62	2	176.1	587.8	0.1793	0.641	0.484	0.036	0.4045	150
Ex/ANF 9 × 9	79	2	176.1	575.3	0.1779	0.572	0.424	0.03	0.3565	150
	74	2[3]	176.1	575.3	0.1666	0.572	0.424	0.03	0.3565	150

[1] 6" natural uranium blankets on top and bottom.
[2] May have 1 large water hole - 3.2 cm ID, 0.1 cm thickness.
[3] 2 large water holes occupying 7 fuel rod locations - 2.5 cm ID, 0.07 cm thickness.
[4] Shortened active fuel length in some rods.

Table 1.2-7 Characteristics of General Atomics Irradiated Fuel Material (GA IFM)

Parameter	RERTR	HTGR
Maximum Number of Assemblies, Elements or Rods	13 intact; 7 sectioned	N/A
Maximum Loaded Enclosure Weight, lbs	76.0	71.5
Maximum Fuel Weight, lbs	23.73	23.52
Maximum Overall Length, in	29.92	N/A
Maximum Active Fuel Length, in	22.05	N/A
Fuel Material	U-ZrH	UC_2, UCO, UO_2, $(Th,U)C_2$, $(Th,U)O_2$
Fuel Rod Cladding	Incoloy 800	N/A
Maximum Uranium, kg U	3.86	0.21
Maximum Initial ^{235}U, wt %	19.7	93.15
Maximum Burnup, MWD/MTU	N/A	N/A
Maximum Unit Decay Heat, W	11.0	2.05
Maximum Cask Decay Heat, W	13.05	13.05
Earliest Shipment Date	1/1/96	1/1/96
Maximum Activity, Ci	2920	483

Table 1.2-8 Typical Production TPBAR Characteristics[1]

Parameter Description	Value
Maximum Number of TPBARs per Consolidation Canister	300
Number of Consolidation Canisters per Cask	1
TPBAR Clad Material	316 L Stainless Steel
Rod Length[2], in	153.04
Rod Diameter[29], in	0.381
Maximum Rod Heat Load, W	2.31
Maximum Cask Heat Load, kW	0.693
Maximum Tritium Content per Rod, gram	1.2
Maximum Activity per Cask[3], Ci	3.84×10^6
Loaded TPBAR Consolidation Canister Maximum Weight, pounds[4]	1,000
Maximum Event Failed Tritium Release (Ci/rod)	<55
Minimum Cooling Time, days	30

[1] Refer to Section 1.5, Chapter 1 Appendices, Unclassified DOE Reference Documents and Drawings.
[2] Beginning of life, nominal, unirradiated dimensions.
[3] Primary dose contribution: 1.1×10^4 Ci ^{60}Co/cask
[4] The bounding weight employed in the structural analysis.

Table 1.2-9 PULSTAR Fuel Characteristics

Description	Value
Maximum Pellet Diameter (inch)	0.423
Minimum Element (Rod) Cladding Thickness (inch)	0.0185
Minimum Element (Rod) Diameter (inch)	0.470
Maximum Active Fuel Height (inch)	24.1
Element (Rod) Length (inch)	26.2
Rod Pitch (inch)	0.525 × 0.607
Assembly Length (inch)	38
Box Outside Width (inch)	2.745 × 3.155
Box Thickness (inch)	0.06
Maximum Assembly or Loaded Can Weight (lb) [1]	80
Maximum PULSTAR Can Content Weight (lb)[2]	39.6
Maximum Enrichment (wt % ^{235}U)	6.5
Maximum ^{235}U Content per Element (g)	33
No. of Elements (Rods) per Assembly	25
No. of Elements (Rods) per Can[33]	25
Maximum Depletion (%^{235}U)	45
Minimum Cool Time (yrs)	1.5
Maximum Heat Load per Assembly (W)	30
Maximum Heat Load per Element (W)	1.2

[1] Listed weight is the maximum weight evaluated for the structural calculation to bound all payload configurations, including loaded cans, and spacers. Nominal PULSTAR assembly weight is 45 pounds.

[2] The contents of a PULSTAR can are restricted to the equivalent of the fuel material in 25 PULSTAR fuel elements and of the displaced volume of 25 intact PULSTAR fuel elements. Fuel material may be in damaged form including fuel debris. The listed weight represents the can content limit established by the structural analyses.

Table 1.2-10 Spiral Fuel Assembly Characteristics

Parameter	Value
Number of elements per assembly	10
Fuel element type	Curved plate
Nominal dimensions of element (cm)	0.147 × 7.33 × 63.5 (individual plate)
Chemical form of fuel meat	U-Al_x-alloy
Cladding material	Aluminum
Nominal over-all dimensions (cm)	63.818 (height) × 10.16 diameter[5]
Max total weight of ^{235}U (g)	160 (total per assembly)
Maximum enrichment (wt % ^{235}U)	85
Side plate material	Aluminum (inner and outer tubes)
Nominal side plate – dimensions (cm)	Inner 6.045 OD, 5.82 ID × 63.818 Outer 10.16 OD, 9.85 ID × 63.818[1]
Max. assembly weight (lb)	18[2]
Assembly maximum heat load (W)	15.7[3]
Burnup/cool time limit	Variable[4]

1 Criticality evaluations reduced inner and outer shell thickness to 0.01 cm to provide additional moderator within the assembly.

2 Typical assembly weight is 7.9 pounds. Bounding structural analysis weight is listed.

3 Thermal and shielding evaluation employed 18 W per element. Based on cool time constraint, 15.7 W represents maximum heat load.

4 Spiral fuel is constrained to DIDO MEU cool time limits as a function of burnup. Minimum cool times for the spiral assembly, down to 270 days, shall be determined using the procedure presented in Section 7.1.4 for 18 W DIDO MEU fuel.

5 Cropped to fit within ANSTO fuel basket module nominal height of 28.3 inches.

Table 1.2-11 MOATA Plate Bundle Characteristics

Parameter	Value
Maximum number of elements per assembly	14
Nominal dimensions of element (cm)	66 cm long, 7.6 cm wide and 0.203 cm thick
Nominal dimensions of fuel meat (cm)	58.4 cm long, 6.99 cm wide and 0.1016 cm thick (bounding active fuel width evaluated to a maximum of 7.32 cm)
Chemical form of fuel meat	U-Al_x-alloy
Cladding material	Aluminum
Nominal clad thickness (cm)	0.05 cm (evaluated to 0.01 cm minimum)
Plate spacer thickness (cm)	0.147 min, 0.152 max (evaluated to 0.18 maximum)
Maximum weight of ^{235}U (g) per plate	22.3
Maximum enrichment (wt % ^{235}U)	92
Nominal side plate thickness (cm)	0.635 (bounding evaluation replaced by cavity moderator)
Max. assembly weight (lb)	18[1]
Maximum heat load per assembly (W)[2]	3 (total for 14 fuel plates)
Maximum burnup	30,000 MWd/MTU or 4.1 % depletion ^{235}U
Minimum cool time (years)	10

[1] Typical assembly weight is 13.6 pounds. Bounding structural analysis weight is listed.
[2] Actual heat load at limiting burnup and cool time < 1 Watt. Thermal evaluations at 3 Watt per bundle.

Table 1.2-12 Typical TPBAR Segment Characteristics in Waste Container

Parameter/Description	Value
Maximum Number of TPBAR Segments and Debris per Waste Container, equivalent number of TPBARs	55
Number of Waste Containers per Cask	1
Waste Container Material	316L Stainless Steel
Maximum Tritium Content per TPBAR equivalent, gram	1.2
Maximum Activity per Cask, Ci	$6.66 \times 10^{+5}$
Maximum Heat Load per Waste Container, watts	127
Maximum Loaded Waste Container Weight, pounds	700[1]
Minimum Cooling Time, years	90

[1] Design basis weight of a loaded waste container is 700 pounds. Applying a maximum payload of 55 TPBARs, with storage canister, yields a maximum weight of 662 pounds. Use of shrouds to contain segments and/or TPBAR debris reduces overall waste container weight due to a reduction in TPBAR payload capacity resulting from the reduced container free volume.

Chapter 4

4.5.5 Containment Analysis of MTR Fuel Elements

To support the shipment of MTR fuel elements that have localized aluminum cladding corrosion, or mechanical damage, DOE has prepared a set of reports titled "Bases for Containment Analysis for Transportation of Aluminum-Based Spent Nuclear Fuel" (WSRC-TR-98-00317) and "Impact of Degraded RA-3 Fuel Condition on Transportation to and Storage in SRS Basins" (WSRC-TR-2000-00152). Report WSRC-TR-98-00317 has been presented by DOE to the NRC, and subsequently requested by DOE to be used to justify the radionuclide activity concentrations for MTR fuel in the NAC-LWT cask. Report WSRC-TR-2000-00152 demonstrates that mechanical damage may be treated similarly to cladding corrosion, and that the controlling variable in the calculation is the surface area of fuel meat exposed. The information that follows relies heavily on the methodology and terminology presented in the WSRC reports.

MTR fuel elements are divided into three broad categories based on their initial enrichment. These categories are highly enriched (HEU), medium enriched (MEU), and low enriched (LEU). Each category was individually evaluated in Chapter 5 to determine minimum cool time as a function of burnup. Containment evaluations were performed for each of the fuel types at 30 watts at or above the maximum permissible burnup. The 30-watt pattern reflects full basket loads (seven elements per basket) and bounds the higher heat load HEU patterns. While higher fuel mass LEU elements (640 grams ^{235}U) produce larger radionuclide inventories on a per element basis than those employed in the following calculations, the high LEU mass basket is limited to four elements (refer to Chapter 6) and is, therefore, bounded by the evaluations shown.

The activities and A_2 values together with the maximum allowable normal condition leak rate for each of the three fuel types are:

	MTR LEU	MTR MEU	MTR HEU
Fission Gas Ci	8.84E+01	9.43E+01	8.64E+01
Fission Gas A_2	2.78E+02	2.78E+02	2.78E+02
Volatiles Ci	2.79E+03	2.79E+03	2.76E+03
Volatiles A_2	1.05E+01	1.09E+01	1.21E+01
Fines Ci	5.36E+03	5.05E+03	3.41E+03
Fines A_2	9.56E-01	9.72E-01	4.56E-01
Allowable Leakage Rate (cm^3/sec)	1.83E-05	1.94E-05	1.42E-05

The detailed evaluation of the bounding HEU MTR fuel element is shown in the following sections.

4.5.5.1 Definition of Variables

The following variables are utilized to determine the releasable quantity of radionuclides and the corresponding allowable leakage rate from the cask. These variables are defined either within the WSRC reports or are specific to the MTR fuel loading proposed for the NAC-LWT cask.

Fraction of Breached Fuel	f_b	0.10 (normal)	1.0 (accident)
Fission Gas Release Fraction	f_G	0.30 (normal)	1.0 (accident)
Volatile Release Fraction	f_V	1×10^{-6} (normal & accident)	
Fuel Meat Spallation Fraction	T_F	0.15 (normal)	1.0 (accident)
Crud Spallation Fraction	f_C	0.15 (normal)	1.0 (accident)
Depth of Corrosion Attack	P	5×10^{-4} cm	
Cask Free Volume	V_c	2.293×10^5 cm^3 (Table 4.2-3)[1]	
Number of MTR Assemblies	Assy	42 (maximum)	
Gas A_2 Value	$A_{2\ gas}$	277.74 Ci (Table 4.5-10)	
Volatile A_2 Value	$A_{2\ vol}$	12.06 Ci (Table 4.5-11)	
Fines A_2 Value	$A_{2\ fines}$	0.46 Ci (Table 4.5-12)	
Crud A_2 Value	$A_{2\ crud}$	0.27 Ci (WSRC Report, Section 5.4)	
Corrosion Fraction	0.5	(maximum design basis)	

[1] Free volume associated with 42 element basket with intact MTR fuel elements. Cask free volume would not be significantly reduced for the configuration of loose plates in an MTR plate canister, as the additional material of the can is offset by the lack of MTR fuel assembly hardware materials.

Chapter 5

TABLE OF CONTENTS

LIST OF FIGURES

LIST OF TABLES

5.1 Discussion and Results

The NAC-LWT cask is designed for the safe transport of spent nuclear fuel from various commercial nuclear installations and research reactors.

The following contents constitute the design basis for transport in the NAC-LWT cask:

- one Westinghouse 15 × 15 Pressurized Water Reactor (PWR) assembly
- up to 25 PWR rods
- up to two General Electric 7 × 7 Boiling Water Reactor (BWR) assemblies
- fifteen intact metallic fuel rods or six failed metallic fuel rods
- up to 42 Materials Test Reactor (MTR) research reactor fuel elements
- up to 140 TRIGA fuel elements or up to 560 TRIGA fuel cluster rods
- up to 25 PWR or BWR high burnup (up to 80,000 MWd/MTU) fuel rods
- up to 42 DIDO research reactor fuel assemblies
- two General Atomics (GA) Irradiated Fuel Material (IFM) Fuel Handling Units
- up to 300 TPBARs (of which two can be prefailed)
- up to 55 TPBARs segmented during PIE and associated segmentation debris
- up to 700 PULSTAR fuel elements (intact or damaged)
- up to 42 spiral fuel assemblies
- up to 42 MOATA plate bundles

The high burnup PWR and BWR rods may be transported in three configurations: 1) a maximum of 25 intact fuel rods loaded in the rod holder; 2) a maximum of 25 fuel rods with up to 14 damaged fuel rods or rod fragments loaded in the rod holder; and 3) a maximum of 25 intact fuel rods housed in a fuel assembly lattice within the NAC-LWT PWR basket. The fuel assembly lattice may be irradiated up to an equivalent burnup of 80,000 MWd/MTU.

The metallic fuel consists of a single rod of uranium metal clad with aluminum. The intact metallic fuel rods are placed into a transport canister that will hold five intact rods. The cask can hold three transport canisters for a total of 15 intact metallic fuel rods. In the event the metallic fuel has failed or is suspected of having failed, each fuel rod is sealed in its own container. The failed metallic fuel is loaded into either one of the three holes in the metallic fuel basket or into one of the six openings in the failed metallic fuel basket.

MTR research reactor fuel elements are typically 33 to 57 inches long, including lower nozzle and upper handle. The fuel plates typically consist of U-Al, U_3O_8-Al, or USi-Al clad with aluminum. The fuel plates are held in a parallel arrangement with two thick aluminum slotted pieces to form a fuel element. Standard fuel elements have between 10 and 23 fuel plates. The active fuel region is typically 22.75 inches in height, and the fuel meat is typically 0.023-inch thick. The highly enriched uranium (HEU) fuel has been analyzed conservatively with an enrichment of 90 wt % ^{235}U and fuel loading per element up to 380 g ^{235}U, with a separate analysis performed to accommodate up to 460 g ^{235}U. The design basis fuel parameters are provided in Table 5.1-1. The fuel characteristics are presented in Table 5.1-2. The dose rates produced from the design basis 470 g ^{235}U and 640 g ^{235}U LEU and 380 g ^{235}U MEU MTR fuel are bounded by the HEU MTR design basis fuel. Therefore, a mixed loading of LEU, MEU and HEU MTR fuel elements are also bounded by a full HEU MTR fuel element loading.

The source term characteristics of the design basis PWR fuel assembly, BWR fuel assembly, metallic rods, 25 PWR rods and MTR fuels are given in Table 5.1-3. The design basis PWR and BWR fuels require two years of cooling after discharge to meet the neutron and gamma source, and decay heat limits of the cask. The 25 design basis PWR rods burned to 60,000 MWD/MTU require 150 days of cooling. The design basis metallic fuel requires one year cooling. The design basis MTR fuel requires a variable number of years cooling, after discharge, to meet the decay heat limits of the cask. Loading configurations must conform to the limits stated in Section 7.1.5.

DIDO research reactor fuel elements typically consist of U-Al, U_3O_8-Al, or U_3Si_2-Al that is aluminum clad. The fuel elements are held in a concentric arrangement inside an outer aluminum cylinder to form a fuel assembly. Fuel assemblies have 4 fuel elements. The active fuel region is typically 23.6 inches in height, and the fuel meat is typically 0.026 inch thick. The highly enriched uranium (HEU) fuel has been analyzed with a minimum enrichment of 90 wt % ^{235}U and fuel loading per assembly up to 190 g ^{235}U. Low enriched (LEU) and medium enriched (MEU) assemblies are evaluated at 190 g ^{235}U with minimum enrichments of 19 and 40 wt % ^{235}U, respectively. The design basis fuel parameters are provided in Table 5.1-1. The fuel characteristics are presented in Table 5.1-2. As discussed in Section 5.0, the dose rates produced from the design basis LEU and MEU DIDO fuel are bounded by the HEU DIDO design basis fuel. Therefore, a mixed loading of LEU, MEU and HEU DIDO fuel assemblies is also bounded by a full HEU DIDO fuel assembly loading.

Table 5.1-1 Type, Form, Quantity and Potential Sources of Design Basis Fuel

Fuel Type	-	PWR, Westinghouse 15 × 15
	-	3.7 w/o ^{235}U maximum initial enrichment
	-	35,000 MWd/MTU maximum burnup
	-	2.5 kW per assembly maximum decay heat
	-	2 years (or more) decay time after reactor discharge
Fuel Form	-	Intact assemblies
Quantity	-	1 design basis fuel assembly
Source of Fuel	-	Commercial PWR nuclear power reactors
Transport Index	-	35
Fuel Type	-	BWR, General Electric 7 × 7
	-	4.0 w/o ^{235}U maximum initial enrichment
	-	30,000 MWd/MTU maximum burnup
	-	1.1 kW per assembly maximum decay heat, 2.2 kW per cask for 2 assemblies
	-	2 years (or more) decay time after reactor discharge
Fuel Form	-	Intact assemblies
Quantity	-	2 design basis fuel assemblies
Source of Fuel	-	Commercial BWR nuclear power reactors
Transport Index	-	35
Fuel Type	-	PWR rods
	-	5.0 w/o ^{235}U maximum initial enrichment
	-	60,000 MWd/MTU maximum average burnup (up to 2 rods may have maximum average burnup of up to 65,000 MWd/MTU)
	-	1.41 kW maximum decay heat
	-	150 day minimum cool time
Fuel Form	-	Intact rods
Quantity	-	up to 25
Source of Fuel	-	Commercial PWR nuclear power reactor
Transport Index	-	60
Fuel Type	-	High Burnup PWR or BWR rods
	-	5.0 wt. % maximum ^{235}U initial enrichment
	-	80,000 MWd/MTU maximum average burnup
	-	2.3 kW /cask maximum decay heat
	-	Minimum cool time dependent on burnup (See Table 5.3-62)
Fuel Form	-	Intact rods in a fuel assembly lattice or rod holder and intact rods with up to 14 fuel rods classified as damaged in a rod holder
Quantity	-	Up to 25
Source of Fuel	-	Commercial PWR or BWR nuclear power reactor
Transport Index	-	36 (intact rods) 28 (intact rods in a fuel assembly lattice) 37 (intact rods with 14 rods classified as damaged)

Table 5.1-1 Type, Form, Quantity and Potential Sources of Design Basis Fuel (Continued)

Fuel Type	-	Uranium metal fuel rods
	-	Natural w/o ^{235}U
	-	1,600 MWd/MTU maximum burnup
	-	0.0357 kW per sound rod maximum decay heat, 0.54 kW per cask for 15 sound fuel rods
	-	1 year (or more) decay time after reactor discharge
Fuel Form	-	Intact or encapsulated failed fuel rods
Quantity	-	15 design basis fuel rods, or 6 design basis failed fuel rods
Source of Fuel	-	Research reactors
Transport Index	-	25
Fuel Type	-	Material Test Reactor (MTR) Fuel Elements
	-	HEU: 90 wt % ^{235}U, Maximum burnup variable up to 660,000 MWd/MTU for 380 g ^{235}U and 577,500 MWd/MTU for 460 g ^{235}U
	-	MEU: 40 wt % ^{235}U, Maximum burnup variable up to 293,300 MWd/MTU for 380 g ^{235}U
	-	LEU: 19 wt % ^{235}U, Maximum burnup variable up to 139,300 MWd/MTU for 470 g ^{235}U and 640 g ^{235}U
	-	210 W per basket decay heat
	-	Variable cool time down to 90 days using the procedure in Section 7.1.5
Fuel Form	-	Intact aluminum clad parallel plates
Quantity	-	Up to 42 fuel elements
Source of Fuel	-	Research and Material Test Reactors
Transport Index	-	45
Fuel Type	-	TRIGA Fuel Element
	-	20 to 70 wt % ^{235}U
	-	80% ^{235}U depletion (approximately 151 GWd/MTU for LEU fuel and 460 GWd/MTU HEU fuel)
	-	7.5 watts per element decay heat
	-	Variable cool time down to 90 days
Fuel Form	-	Aluminum or stainless steel (304) clad rods, intact, failed or as debris
Quantity	-	Up to 140 fuel elements
Source of Fuel	-	Test, Research and Isotope Reactors
Transport Index	-	25
Fuel Type	-	TRIGA Fuel Cluster Rods
	-	93 wt % ^{235}U
	-	80% ^{235}U depletion (approximately 600 GWd/MTU)
	-	1.875 watts per rod decay heat
	-	Variable cool time down to 90 days
Fuel Form	-	Incoloy 800 clad rods, intact, failed or as debris
Quantity	-	Up to 560 fuel rods
Source of Fuel	-	Test, Research and Isotope Reactors
Transport Index	-	25

Table 5.1-2 Design Basis Fuel for Shielding Evaluation

Parameter	PWR	BWR	Metallic	MTR (HEU)	MTR (MEU)	MTR (LEU)	DIDO
Assembly Array	15 × 15	7 × 7	N/A	Parallel Plates	Parallel Plates	Parallel Plates	Fuel Tubes
Assembly or Element Weight (lbs)	1650	750	1805 (15 rods)	13.0 (max)	13.0 (max)	13.0 (max)	15.0 (max)
Assembly/Element/Rod Length (in)	162	176	120.5	25.23[5]	26.14[5]	26.14[5]	24.6
Active Fuel Length (in.)	144	144	120.0	24.80	25.59	25.59	23.6
No. Rods per Assembly	204	49	N/A	N/A	N/A	N/A	N/A
No. of Plates per Element	N/A	N/A	N/A	23	23	23	4
Fuel Rod Diameter/Plate Thickness (in.)	0.422	0.563	1.36	0.050	0.050	0.050	0.059
Clad Material	Zr-4	Zr-4	Al	Al	Al	Al	Al
Clad Thickness (in)	0.0243	0.032	0.080	0.0150	0.0150	0.0150	0.0167
Pellet Diameter/Meat Thickness (in)	0.3659	0.487	1.36	0.020	0.020	0.020	0.026
Fuel Material	UO_2	UO_2	U metal	U_3O_8-Al; U-Al; or U_3Si_2-Al	U_3O_8-Al; U-Al; or U_3Si_2-Al	U_3O_8-Al; U-Al; oor U_3Si_2-Al	U_3O_8-Al; U-Al; or U_3Si_2-Al
Percent Theoretical Density	95	95	100	N/A	N/A	N/A	N/A
Enrichment (wt %^{235}U)	3.7	4.0	Natural	90[8]	40[8]	19[8]	90 (HEU) 400 (MEU) 199 (LEU)
Maximum Average Burnup (MWd/MTU)	35,000	30,000	1,600	Variable up to 660,000[2,9]	Variable up to 293,300[2]	Variable up to 139,300[2]	Variable up to 577,460 (HEU) 256,650 (MEU) 121,910 (LEU)
Minimum Cool Time	2 Years	2 Years	1 Year	Variable down to 90 days[2]	Variable down to 90 days[2]	Variable down to 90 days[2]	Variable down to 180 days[10]
U Weight (kg/assembly)	475	198	N/A	N/A	N/A	N/A	N/A
U Weight (kg/element)	N/A	N/A	54.5	0.422 0.511	0.950	2.4737 3.3684	0.2111 (HEU) 0.4750 (MEU) 1.0000 (LEU)
UO_2 Weight (kg/assembly)	538.9	224.3	N/A	N/A	N/A	N/A	N/A

Notes:

1. Up to 2 of the PWR rods may have a maximum average burnup of 65,000 MWd/MTU.
2. Variable cool time down to 90 days using the procedure in Section 7.1.4.
3. Design Basis normal condition source term is for ACPR fuel with 86,100 MWd/MTU (50% ^{235}U depletion) and accident condition source term is for FLIP-LEU-II with 151,100 MWd/MTU (80% ^{235}U depletion).
4. Detailed fuel data is presented in Tables 1.2-1 and 6.2.5-1. The values presented here are the physical values for the bounding source terms of the ACPR and FLIP-LEU-II fuel types..
5. For MTR fuel assemblies, which are cut to remove non-fuel bearing hardware prior to transport, a nominal 0.28 inch of non-fuel hardware will remain above and below the active fuel region to allow for fuel handling operations
6. Minimum cool time varies with burnup such that maximum decay heat is 1.875 watts/rod.
7. Varies with burnup – see Table 5.3-62.
8. For the shielding evaluation, lower values are conservatively assumed.
9. Maximum burnup of 660,000 MWd/MTU for 380 g ^{235}U and 577,500 MWd/MTU for 460 g ^{235}U.
10. Variable cool time down to 180 days using the procedure in Section 7.1.4.

Table 5.1-2 Design Basis Fuel for Shielding Evaluation (continued)

Parameter	PWR Rods	High B/U PWR Rods	High B/U BWR Rods	TRIGA[4]	TRIGA Fuel Cluster Rods	TPBARs
Assembly Array	N/A	N/A	N/A	N/A	N/A	N/A
Assembly or Element Weight (lbs)	N/A	N/A	N/A	8.82 (nominal) 13.2 (max)		2.655
Assembly/Element/Rod Length (in)	162	162	176.1	45	31.0	153.035 (pre-irradiation)
Active Fuel Length (in.)	144	150	150	15	22.5	N/A
No. Rods per Assembly per Shipment	25	25	25	1	1	300 Production or 55 Segmented
No. of Plates per Element	N/A	N/A	N/A	N/A	N/A	N/A
Fuel Rod Diameter/Plate Thickness (in)	0.422	0.440	0.570 (7×7) 0.4961 (other)	1.478	0.542	0.381
Clad Material	Zr-4	Zr-4	Zr-2	304SS	Incoloy 800	316 SS
Clad Thickness (in)	0.242	0.026	0.036 (7×7) 0.0343 (other)	0.02	0.016	0.0225
Pellet Diameter/Meat Thickness (in)	0.3659	0.3805	0.4900 (7×7) 0.4213 (other)	1.435 (max)	0.510	N/A
Fuel Material	UO_2	UO_2	UO_2	U-ZrH	U-ZrH	N/A
Percent Theoretical Density	97	95	95	95	95	N/A
Enrichment (wt %^{235}U)	5.0	5.0	5.0	20	93.3	N/A
Maximum Average Burnup (MWd/MTU)	60,000[1]	80,000	60,000 – 80,000	ACPR 86,100 (50% ^{235}U)[3] FLIP-LEU-II 151,100 (80% ^{235}U)[3]	Variable up to 600,000	N/A
Minimum Cool Time	150 (days)	150 days	Varies with burnup[7]	ACPR 231 days FLIP-LEU-II 908 days	Varies with burnup[6]	30 days for production TPBAR; 90 days for PIE TPBAR
U Weight (kg/assembly)	58.2	65.6	108.8 (7×7) 91.3 (other)	N/A	N/A	N/A
U Weight (kg/element)	N/A	N/A	N/A	ACPR 0.280 FLIP-LEU-II 0.824	0.0452	N/A
UO_2 Weight (kg/assembly)	66.0	66.0	74.5	N/A	N/A	N/A

Notes:
1. Up to 2 of the PWR rods may have a maximum average burnup of 65,000 MWd/MTU.
2. Variable cool time down to 90 days using the procedure in Section 7.1.4.
3. Design Basis normal condition source term is for ACPR fuel with 86,100 MWd/MTU (50% ^{235}U depletion) and accident condition source term is for FLIP-LEU-II with 151,100 MWd/MTU (80% ^{235}U depletion).
4. Detailed fuel data is presented in Tables 1.2-1 and 6.2.5-1. The values presented here are the physical values for the bounding source terms of the ACPR and FLIP-LEU-II fuel types..
5. For MTR fuel assemblies, which are cut to remove non-fuel bearing hardware prior to transport, a nominal 0.28 inch of non-fuel hardware will remain above and below the active fuel region to allow for fuel handling operations
6. Minimum cool time varies with burnup such that maximum decay heat is 1.875 watts/rod.
7. Varies with burnup – see Table 5.3-62.
8. For the shielding evaluation, lower values are conservatively assumed.
9. Maximum burnup of 660,000 MWd/MTU for 380 g ^{235}U and 577,500 MWd/MTU for 460 g ^{235}U.
10. Variable cool time down to 180 days using the procedure in Section 7.1.4.

Table 5.1-2 Design Basis Fuel for Shielding Evaluation (continued)

Parameter	GA IFM RERTR	GA IFM HTGR	PULSTAR Fuel	Spiral Fuel Assembly	MOATA Plate Bundle
Assembly Array	N/A	N/A	5×5	Spiral Plates	Parallel Plates
Assembly or Element Weight (lbs)	23.73	23.52	45 (assembly); 1.3 (element)	7.9	13.6[11]
Assembly/Element/Rod Length (in)	29.92	N/A	38 (assembly) 26.2 (element)	63.5 cm	58.4 cm[12]
Active Fuel Length (in)	22.05	N/A	24.1	60.325 cm	58.4 cm
No. Rods per Assembly	13 intact; 7 sectioned	N/A	25	N/A	N/A
No. of Plates per Element	N/A	N/A	N/A	10	maximum 14
Fuel Rod Diameter/Plate Thickness (in)	0.543	N/A	0.47	0.147 cm	0.203 cm
Clad Material	Incoloy	N/A	Zirconium alloy	Al	Al
Clad Thickness (in)	0.031	N/A	0.0185	0.043 cm	N/A
Pellet Diameter/Meat Thickness (in)	0.512	N/A	0.423	0.061 cm	0.1016 cm
Fuel Material	U-ZrH	UC_2; UCO; UO_2; $(Th,U)C_2$; or $(Th,U)O_2$	UO_2	U-Al	U-Al
Percent Theoretical Density	N/A	N/A	94.9% (nominal); 99.5% (analyzed)	N/A	N/A
Enrichment (wt % ^{235}U)	19.7	93.15 (maximum)	6	75	80
Maximum Average Burnup (MWd/MTU)	N/A	N/A	45	70% ^{235}U depletion	30,000 MWd/MTU 4.1% ^{235}U depletion
Minimum Cool Time	None	None	1.0 Year	see MEU DIDO	10 yr
U Weight (kg/assembly)	8.49	0.45	13.33	0.213[13]	0.4375[14]
U Weight (kg/element)	0.42	N/A	0.53	0.0213[15]	0.03125[16]
UO_2 Weight (kg/assembly)	N/A	N/A	15.13	N/A	N/A

Notes: (cont'd)

11. For 14-fuel plate bundle.
12. Not available for in-core configuration. Analysis input restricted to active fuel length.
13. Based on a 160 g ^{235}U fissile material load and listed enrichment.
14. Based on fuel mass per plate multiplied by 14 plates.
15. Based on 10 plates per assembly.
16. Based on 25 g ^{235}U and listed enrichment.

Table 5.1-3 Nuclear and Thermal Source Parameters

Payload	Decay Heat (kW)	Gamma Source (MeV/sec) (g/sec)	Neutron Source (n/sec)	Top End-Fitting (g/sec)	Bottom End-Fitting (g/sec)
1 PWR Assembly	2.5	7.78E+15 1.27E+16	2.21E+08	1.49E+13	1.25E+13
2 BWR Assemblies	2.2	6.35E+15 1.04E+16	1.34E+08	1.16E+12	2.78E+12
15 Sound Metallic Fuel Rods[2]	0.532	8.81E+14 4.37E+15	1.61E+05	N/A	N/A
6 Failed Metallic Fuel Rods[1]	0.03	3.53E+14 1.75E+15	6.44E+04	N/A	N/A
42 HEU MTR Elements[3,8]	1.26	- - 7.42E+15	1.40E+08	N/A[15]	N/A[15]
42 MEU MTR Elements[3,8]	1.26	- - 7.86E+15	2.88E+07	N/A[15]	N/A[15]
42 LEU MTR Elements[3,8,14]	1.26	- - 7.51E+15	3.96E+07	N/A[15]	N/A[15]
42 DIDO Assemblies[10]	1.05	- - 6.07E+15	9.73E+04	N/A	N/A
25 PWR Rods[2]	1.41	3.47E+15 8.39E+15	1.40E+08	N/A	N/A
TRIGA (140 Elements)[7] Normal Condition	1.05	2.15E+15[4] 6.52E+15[4]	1.57E+06	Note 6	Note 6
TRIGA (140 Elements)[7] Accident Condition	1.05	2.60E+15[5] 5.97E+15[5]	1.06E+08	Note 6	Note 6
General Atomics Irradiated Fuel Material	0.013	- - 3.429E+13	1.279E+04	Note 11	Note 11
300 Production TPBARs	1.005	5.030E+15 6.681E+15	N/A	N/A	N/A
55 PIE TPBARs	1,005	3.63E+13 5.6E_13	N/A	N/A	N/A
PULSTAR Fuel	1.05[12]	6.206E+15	2.115E+07	N/A	N/A
Spiral Fuel Assembly[13]	0.756	--- 1.07E +14	4.54E+3	N/A	N/A
MOATA Plate Bundle	0.042	--- 2.2E +12	< 1E+3	N/A	N/A

Notes:

1. Gamma and neutron source terms conservatively calculated based on design basis sound metallic fuel rods.
2. 23 rods with 60,000 MWd/MTU burnup and two rods with 65,000 MWd/MTU burnup. Source terms as a function of cool time for the 80,000 MWd/MTU burnup PWR and BWR rods are presented in Section 5.3.8.
3. Bounding values of the gamma and neutron source terms presented for 30W uniform loading for 80% burnup.
4. Based on TRIGA ACPR fuel (86,100 MWd/MTU, 231 days cooling, 50% ^{235}U depletion).
5. Based on TRIGA FLIP-LEU-II fuel (151,100 MWd/MTU, 908 days cooling, 80% ^{235}U depletion).
6. Total hardware gamma is 7.64E+14 gamma/second for ACPR fuel (86,100 MWd/MTU, 231 days cooling, 50% ^{235}U depletion).
7. TRIGA Fuel Elements are the bounding values used in dose determination for TRIGA cluster rods fuel type.
8. Moderator used is light water, H_20.
9. Moderator used is heavy water, D_20.
10. Bounding values of the gamma and neutron source terms presented for 25W uniform loading for 70% burnup HEU fuel.
11. Hardware activation, including end-fitting sources, for the TRIGA elements included in the total gamma source for GA IFM.
12. Cool time required to meet 30 watt per cell heat load limit is 1.5 years.
13. Based on 18 W per assembly heat load.
14. Fuel source represents maximum magnitude gamma source obtained from the 470 g ^{235}U analysis, and the maximum neutron source obtained from the 640 g ^{235}U analysis.
15. Activated cadmium wires may be included as part of the MTR fuel element or plate construction. A 100 g Cd light element source was evaluated. The Cd inclusion resulted in a maximum source magnitude at any energy line of less than 0.1% of the corresponding fuel source line. The source is, therefore, not significant for further shielding analysis consideration.

Table 5.3-2 Shield Material Densities and Compositions

Material	Element	QAD-CG (g/cc)	XSDRNPM (atom/barn-cm)
Aluminum	AL	2.7	6.026E-2
Stainless Steel	Fe	5.618	6.026E-2
	Cr	1.445	1.67E-2
	Ni	0.963	9.88E-3
Lead	Pb	11.35	3.29E-2
Neutron Shield	H	0.1046	5.73E-2
	O	0.8373	3.15E-2
	B	0.00184	1.108E-4

5.3.4 MTR Fuel Configuration

A maximum of 42 MTR fuel assemblies have been analyzed for transport in the LWT cask. This configuration consists of up to seven fuel assemblies placed radially in each of the six axial fuel basket modules. Two alternate configurations of MTR fuel assembly loading provide for loads of 35 assemblies in five basket modules or 28 assemblies in four basket modules.

LEU and MEU fuel is evaluated for a uniform loading of 30 W per fuel position, resulting in a basket module maximum of 210 W (or 1.26 kW per cask). To allow flexibility in loading either high burnup or short cooled HEU fuel, three possible fuel loading configurations are evaluated. The configurations are based on limiting the total heat load (and corresponding gamma/neutron source) in each basket module to a maximum of 210 W (1.26 kW per cask). Configuration 1 is the loading of three assemblies, having thermal outputs of 120, 70 and 20 watts, in close proximity, with the 120 W assembly occupying the center cell. Configuration 2 is the uniform loading of 7 MTR assemblies, each having a decay heat of 30 W. Configuration 3 has three assemblies in line across the center of the basket, as required by the loading procedure, with a maximum of 70 watts per assembly. These configurations are shown in Figure 5.3-7.

The shielding analysis evaluated all three MTR fuel types for variable burnup considering uniform basket loading for LEU and MEU fuel and the configurations above for HEU fuel. HEU fuel provides the limiting dose rates and, therefore, only the HEU results are discussed in detail. A comparison of dose rates at 2 meters from the transport vehicle is shown in Figure 5.3-8b for various LEU, MEU and HEU payloads. This figure demonstrates that HEU fuel bounds the LEU and MEU payloads. As discussed below, the HEU loading patterns produce significantly higher dose rates than those documented in Figure 5.3-8b for the uniform 30 W loading.

In order to present the limiting MTR dose rates, NAC performed a parametric study in which each of these configurations were examined using the SCALE 4.3 (ORNL,1995) SAS4 (Tang, 1995) computer code for shielding analysis and SAS2H (Herman, 1995) for source terms. The SAS4 sequence incorporates a FORTRAN coding modification that permits the determination of dose rate profiles along the axial and radial surfaces. This study established Configuration 1 as the bounding configuration, with respect to axial and radial dose rates. In the case of the radial evaluation, Configuration 1 is clearly limiting based on the concentrated source term. The axial evaluation concluded that Configurations 1 and 3 are statistically similar and bound Configuration 2. Configuration 1 is selected as the limiting MTR preferential loading configuration and is the load bases for the shielding analysis.

The MTR fuel assembly consists of plates held in a parallel arrangement by thick aluminum slotted side plates. The number of fuel plates range from 17 to 23 per assembly, and the analysis assumed the maximum 23 plate value for each of the three MTR fuel types.

The design basis MTR fuel assemblies were constructed using typical MTR parameters. The physical characteristics of the analyzed LEU, MEU and HEU fuel assemblies are shown in Table 5.3-3. The fueled section of the assembly consists of 23 plates of 0.050-inch thickness and two side plates 0.187-inch thick, which do not contain fuel. The fuel core of each fuel plate is a cermet of aluminum and U-Al, which is 0.020-inch thick. The 6061 aluminum cladding has a minimum thickness of 0.015-inch. The HEU fresh fuel load analyzed consists of either 380 grams or 460 grams of ^{235}U per assembly 90% enriched. The initial enrichment is used to encompass other HEU MTR fuel types.

The SAS2H sequence was used to determine the gamma and neutron source terms and decay heat loads for the evaluated MTR fuel assembly loading configurations. The SAS2H sequence includes the ORIGEN-S code and a 1D XSDRNPM model of the fuel assembly. ORIGEN-S performs fuel assembly depletion at specified operating conditions and calculates heat generation, gamma and neutron spectra for a given discharge isotopic composition as a function of out of reactor time (cooling time). The 1D model of the fuel assembly is used to collapse the 27 group neutron cross section library (27GROUPNDF4) into three broad energy groups for the depletion calculation. The 1D model is based on an equivalent area representation of the fuel/moderator cell and surrounding structural regions. Average power is based on reactor maximum power divided by the number of assemblies in the core.

For the HEU fuel, separate analyses were performed for ^{235}U loadings of 380 grams and 460 grams. For the 380 gram ^{235}U loading, the maximum allowable burnup was 660,000 MWd/MTU. For the 460 gram ^{235}U loading, dose rates exceeding 10 CFR 71 limits were calculated at 660,000 MWd/MTU, so the burnup was limited to 577,500 MWd/MTU. Calculated dose rates are higher for the 380 gram ^{235}U loading at 660,000 MWd/MTU.

For the bounding HEU fuel with 380 grams ^{235}U, a series of eight cases were run in which burnup was varied from a minimum of 82,500 MWd/MTU to a maximum of 660,000 MWd/MTU. Cooling times were considered from 90 days to 6.0 years. Because the cask is loaded based on the decay heat limits, no single design basis fuel assembly or loading configuration exists. Design basis photon and neutron source terms for MTR assemblies with decay heats loads of 20, 30, 70 and 120 watts are determined for the 660,000 MWd/MTU burnup

case, which was bounding. The SAS2H results from these cases are used for the design basis photon and neutron source terms and are summarized in Table 5.3-4 and Table 5.3-5 for 380 grams ^{235}U and Table 5.3-6 and Table 5.3-7 for 460 grams ^{235}U. The material densities used in the analysis are summarized in Table 5.3-8.

Based on the MTR source term calculation, the (alpha, n) reactions in ^{27}Al and ^{28}Si are included in the MTR neutron source term. The (alpha, n) reactions in ^{27}Al and ^{28}Si increase the neutron source term by a factor of ~2.9. Consequently, a factor of 2.9 is applied to the MTR neutron source terms.

The SAS4 (Tang) sequence is used to calculate the dose rates at all points of interest. In this sequence, a 1D adjoint XSDRNPM model generates biasing parameters for a 3D MORSE Monte Carlo model of the NAC-LWT cask with the MTR fuel. SAS4 requires model symmetry about the active fuel midplane (midplane of the six basket modules in this case). A 3D Monte Carlo model is developed for the upper half of the cask. This model bounds the results for a lower half model as the cask has more shielding in the axial direction at the bottom end. The upper half model is shown in Figure 5.3-8a. The model assumes that the fuel is at the highest point in the basket module, that the fuel is loaded in the same way axially in all of the modules, and it ignores the presence of the impact limiters. Detectors are placed at three radial locations of interest. These locations are: 1) cask surface; 2) one meter from the cask surface; and 3) at two meters from the edge of the cask conveyance.

5.3.4.1 Shielding Evaluation for MTR Fuel

This section presents the shielding analyses for normal conditions of transport, illustrates compliance with 10 CFR Part 71. In normal transport, the dose rate limits are:

- The dose rate on the surface of the package is less than 200 mrem/hr, except that localized dose rates up to 1000 mrem/hr are allowed if it is shown that the dose rate on the surface of the ISO enclosure is less than 200 mrem/hr.
- At 2 meters from the edge of the transport vehicle the dose rate is limited to 10 mrem/hr.
- The truck cab (defined as a point 5 meters from the NAC-LWT lid) dose rate is limited to 2 mrem/hr.

The dose rates for the bounding loading configuration (Configuration 1) are shown in Table 5.3-9, Table 5.3-10 and Table 5.3-11 for the cask surface, plane of conveyance, and at 2 meters from the edge of the conveyance, respectively. These dose rates are well below the regulatory limits. The

dose rates at 1 meter from the cask surface are presented in Table 5.3-12, where the maximum dose rate defines the Transport Index (TI) for the cask.

The axial surface and the 5 meter (back of tractor cab) dose rates are shown in Table 5.3-13 and Table 5.3-14. Shielding provided by the impact limiter is conservatively neglected. The axial dose rates at the bottom of the cask are conservatively assumed to be equal to the dose rates reported at the top.

This evaluation shows that the NAC-LWT cask, with up to 42 MTR fuel assemblies, meets the shielding requirements of 10 CFR 71, 49 CFR 173, and IAEA Transportation Safety Standards (TS-R-1).

5.3.4.2 Accident Conditions of Transport

This section presents the accident condition shielding analyses. Under accident conditions, the NRC limits the package dose rate to 1000 mrem/hr at 1 meter off the package surface. The only accident condition examined in this section is the loss of the LWT liquid neutron shield.

This analysis examines Configuration 1 consistent with the limiting configuration analysis for normal conditions of transport presented in Section 5.3.4. The accident condition source terms are identical to the normal condition source terms. The accident condition results are presented in Table 5.3-15.

Figure 5.3-7 MTR Fuel Evaluated Configurations

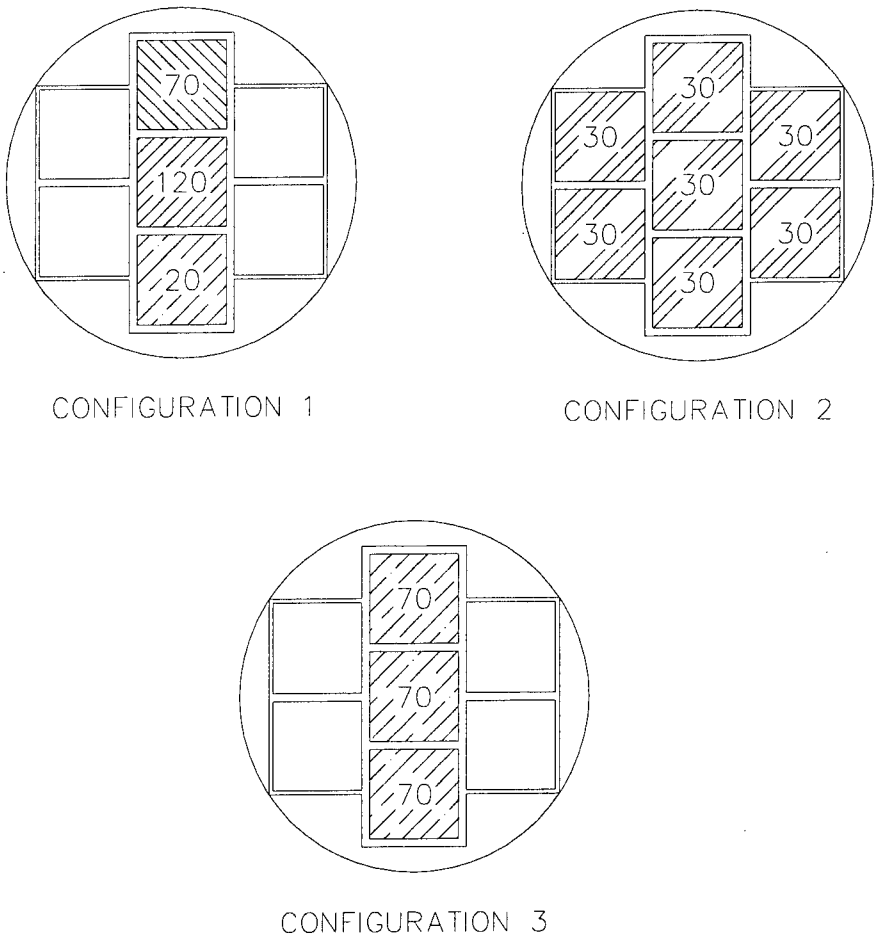

Figure 5.3-8a SAS4 Shielding Model for the MTR Fuel Basket in the NAC-LWT (Upper Half)

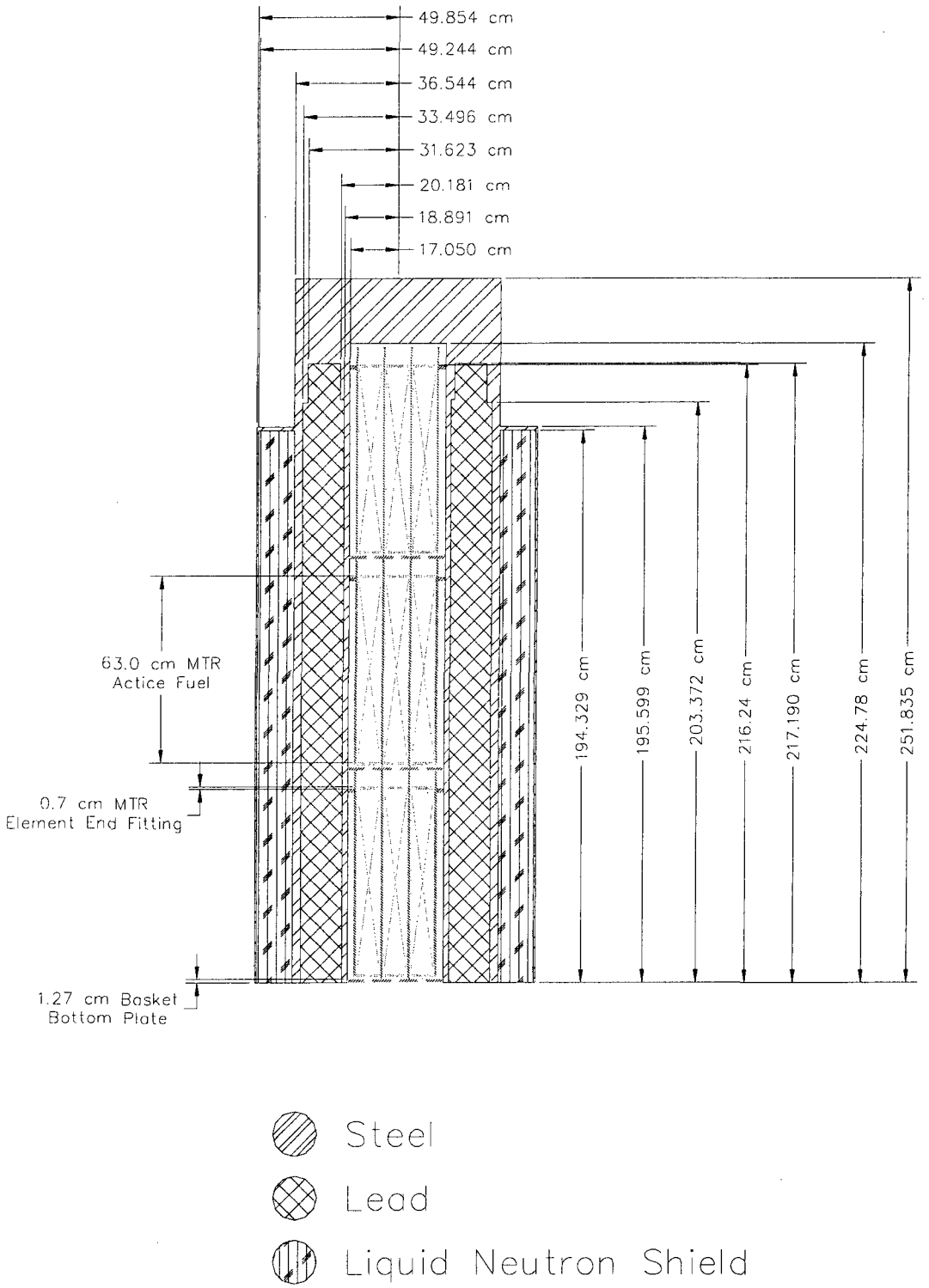

Figure 5.3-8b Dose Rates 2 Meters from Transport Vehicle (30 W Uniform Loading)

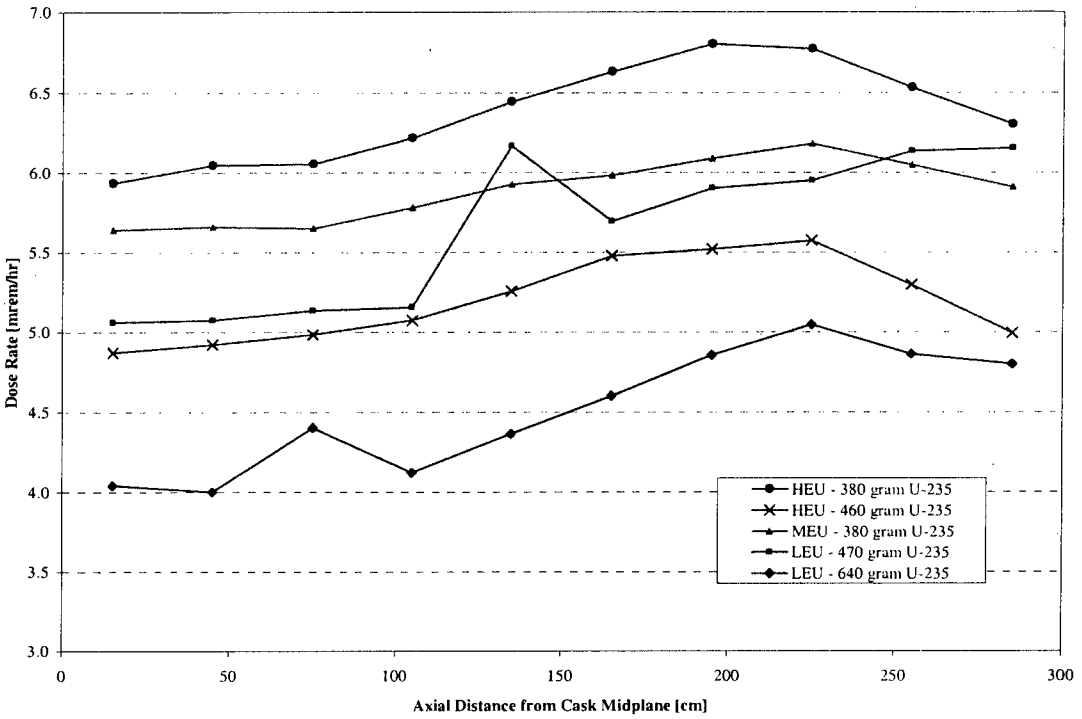

Table 5.3-3 Design Basis MTR Fuel Element Characteristics

Fuel Parameters	Units	HEU	MEU	LEU
Element Width	[cm]	7.6	7.6	7.6
Element Depth	[cm]	8.0	8.0	8.0
Side Plate Thickness	[cm]	0.475	0.475	0.475
Side Plate Depth	[cm]	7.5	7.5	7.5
Number of Plates		23	23	23
Plate Thickness	[cm]	0.127	0.127	0.127
Active Fuel Length	[cm]	63	65	65
Active Fuel Width	[cm]	6.35	6.35	6.35
Active Fuel Thickness	[cm]	0.051	0.051	0.051
Cut End Length	[cm]	0.7	0.7	0.7
Fuel Composition		U-Al	U-Al	U-Al
Wt % ^{235}U		90	40	19
Maximum ^{235}U per Fuel Element	[g]	380[1]	380	470[2]
Wt % U in Fuel Composition		30	50	75

Table 5.3-4 MTR Fuel Element Gamma SourceTerms by Thermal Output – 380 grams ^{235}U

Burnup 660,000 MWd/MTU			MTR Element Thermal Output			
			20 Watts	30 Watts	70 Watts	120 Watts
Group	E_{hi} (Mev)	E_{low} (Mev)	2162 Days (g/sec)	1413 Days (g/sec)	581 Days (g/sec)	330 Days (g/sec)
1	10.00	8.00	1.63E+03	1.81E+03	2.08E+03	2.21E+03
2	8.00	6.50	7.69E+03	8.52E+03	9.79E+03	1.04E+04
3	6.50	5.00	3.92E+04	4.35E+04	4.99E+04	5.30E+04
4	5.00	4.00	9.77E+04	1.08E+05	1.24E+05	1.32E+05
5	4.00	3.00	3.30E+07	1.32E+08	6.24E+08	9.96E+08
6	3.00	2.50	2.81E+08	1.17E+09	5.84E+09	9.56E+09
7	2.50	2.00	2.45E+10	1.47E+11	1.09E+12	2.00E+12
8	2.00	1.66	6.34E+09	2.33E+10	1.32E+11	2.34E+11
9	1.66	1.33	5.93E+11	1.19E+12	3.01E+12	4.20E+12
10	1.33	1.00	1.87E+12	2.75E+12	5.21E+12	6.81E+12
11	1.00	0.80	8.36E+12	1.61E+13	3.47E+13	4.42E+13
12	0.80	0.60	4.21E+13	6.14E+13	1.14E+14	2.15E+14
13	0.60	0.40	1.70E+13	3.41E+13	7.83E+13	1.04E+14
14	0.40	0.30	9.18E+11	1.71E+12	7.11E+12	1.23E+13
15	0.30	0.20	1.42E+12	2.47E+12	9.38E+12	1.62E+13
16	0.20	0.10	5.22E+12	9.84E+12	4.12E+13	7.19E+13
17	0.10	0.05	6.33E+12	1.09E+13	4.07E+13	7.00E+13
18	0.05	0.01	2.19E+13	3.60E+13	1.26E+14	2.15E+14
Total	--	--	1.06E+14	1.77E+14	4.60E+14	7.61E+14

[1] HEU fuel was also analyzed at 460 grams of ^{235}U per fuel element.

[2] LEU fuel was also analyzed at 640 grams of ^{235}U per fuel element.

Table 5.3-5 MTR Fuel Element Neutron Source Terms by Thermal Output – 380 grams ^{235}U

Burnup 660,000 MWd/MTU			MTR Element Thermal Output			
			20 Watts	30 Watts	70 Watts	120 Watts
Group	E_{hi} (Mev)	E_{low} (Mev)	2162 Days (n/sec)	1413 Days (n/sec)	581 Days (n/sec)	330Days (n/sec)
1	2.00E+01	6.43E+00	5.42E+04	6.06E+04	7.06E+04	7.52E+04
2	6.43E+00	3.00E+00	6.26E+05	6.98E+05	8.12E+05	8.67E+05
3	3.00E+00	1.85E+00	7.11E+05	7.90E+05	9.14E+05	9.74E+05
4	1.85E+00	1.40E+00	3.92E+05	4.37E+05	5.07E+05	5.39E+05
5	1.40E+00	9.00E-01	5.25E+05	5.86E+05	6.81E+05	7.24E+05
6	9.00E-01	4.00E-01	5.69E+05	6.36E+05	7.40E+05	7.87E+05
7	4.00E-01	1.00E-01	1.11E+05	1.24E+05	1.45E+05	1.54E+05
8	1.00E-01	1.70E-02	0.00E+00	0.00E+00	0.00E+00	0.00E+00
9	1.70E-02	3.00E-03	0.00E+00	0.00E+00	0.00E+00	0.00E+00
10	3.00E-03	5.50E-04	0.00E+00	0.00E+00	0.00E+00	0.00E+00
11	5.50E-04	1.00E-04	0.00E+00	0.00E+00	0.00E+00	0.00E+00
12	1.00E-04	3.00E-05	0.00E+00	0.00E+00	0.00E+00	0.00E+00
13	3.00E-05	1.00E-05	0.00E+00	0.00E+00	0.00E+00	0.00E+00
14	1.00E-05	3.05E-06	0.00E+00	0.00E+00	0.00E+00	0.00E+00
15	3.05E-06	1.77E-06	0.00E+00	0.00E+00	0.00E+00	0.00E+00
16	1.77E-06	1.30E-06	0.00E+00	0.00E+00	0.00E+00	0.00E+00
17	1.30E-06	1.13E-06	0.00E+00	0.00E+00	0.00E+00	0.00E+00
18	1.13E-06	1.00E-06	0.00E+00	0.00E+00	0.00E+00	0.00E+00
19	1.00E-06	8.00E-07	0.00E+00	0.00E+00	0.00E+00	0.00E+00
20	8.00E-07	4.00E-07	0.00E+00	0.00E+00	0.00E+00	0.00E+00
21	4.00E-07	3.25E-07	0.00E+00	0.00E+00	0.00E+00	0.00E+00
22	3.25E-07	2.25E-07	0.00E+00	0.00E+00	0.00E+00	0.00E+00
23	2.25E-07	1.00E-07	0.00E+00	0.00E+00	0.00E+00	0.00E+00
24	1.00E-07	5.00E-08	0.00E+00	0.00E+00	0.00E+00	0.00E+00
25	5.00E-08	3.00E-08	0.00E+00	0.00E+00	0.00E+00	0.00E+00
26	3.00E-08	1.00E-08	0.00E+00	0.00E+00	0.00E+00	0.00E+00
27	1.00E-08	0.00E+00	0.00E+00	0.00E+00	0.00E+00	0.00E+00
Total	--	--	2.99E+06	3.33E+06	3.87E+06	4.12E+06

Figure 5.3-55 MCNP Input for 300 TPBARs at 30 Days Cool Time – Normal Conditions & Radial Biasing

```
NAC-LWT Cask - Tpbar_030d - Normal Transport Conditions
C Radial Biasing - Fuel Gamma Source
C Cells - TPBARs in Consolidation Canister & Basket - v1.4
1  1  -2.1515  -1          u=2  $ TPBARS
2  0    -2  +1        u=2  $ Can void
3  6  -7.9200  -3  +2        u=2  $ Consol. Can
4  0    -4  +3  +1      u=2  $ Basket void
5  4  -2.7000  -5  +4  -6      u=2  $ Basket shell
6  0    -6  +5        u=2  $ Void
7  0    +6          u=2  $ Outside
C Cells - LWT Cask Normal Conditions v1.4
8  5  -11.3440  -10          u=1  $ BotPb
9  0    -9  fill=2        u=1  $ Cavity
10  6  -7.9200  -8  +10        u=1  $ Bottom
11  6  -7.9200  -7  +8  +12  +15  +9  u=1  $ OuterShell
12  6  -7.9200  -11  +14  +9      u=1  $ InnerShellTaper
13  6  -7.9200  -13  +9        u=1  $ InnerShell
14  5  -11.3440  -14  +13        u=1  $ Lead
15  5  -11.3440  -12  +11  +14      u=1  $ LeadTaper
16  0    -15  +14        u=1  $ LeadGap
17  3  -0.9669  -17  +7        u=1  $ NeutronShield
18  6  -7.9200  -16  +7  +17      u=1  $ NSShell
19  7  -0.4997  -18  +7        u=1  $ UpperLimiter
20  7  -0.4997  -19  +7        u=1  $ LowerLimiter
21  0    -20  +7  +16  +18  +19  u=1  $ Container
22  0    +20          u=1  $ Outside
C Detector Cells - Radial Biasing
100  0  -100  fill=1  $ Surface
200  0  -200  +100  $ 1ft
300  0  -300  +200  $ 1m
400  0  -400  +300  $ 2m
500  0  -500  +400  $ 2m+Convey
600  0  +500  $ Exterior

C Surfaces - TPBARs in Consolidation Canister & Basket - v1.4
1  RPP  -10.3505  10.3505  -10.3505  10.3505  30.1498  421.3098    $ TPBARS
2  RPP  -10.3505  10.3505  -10.3505  10.3505  17.7800  383.5400    $ Consol. can inner
3  RPP  -10.6934  10.6934  -10.6934  10.6934  17.7800  383.5400    $ Consol. can outer
4  RPP  -11.2713  11.2713  -11.2713  11.2713  17.7800  427.9900    $ Basket void
5  RPP  -12.5413  12.5413  -12.5413  12.5413  17.7800  427.9900    $ Basket shell
6  CZ  16.8275              $ Basket OD
C Surfaces - LWT Cask Normal Conditions v1.4
7  RCC  0.0000  0.0000  -26.6700  0.0000  0.0000  507.3650  36.5189  $ Lwt
8  RCC  0.0000  0.0000  -26.6700  0.0000  0.0000  26.6700  36.5189  $ Bottom
9  RCC  0.0000  0.0000  0.0000  0.0000  0.0000  452.1200  16.9863  $ Cavity
10  RCC  0.0000  0.0000  -17.7800  0.0000  0.0000  7.6200  26.3525  $ Bottom gamma shield
11  RCC  0.0000  0.0000  0.0000  0.0000  0.0000  444.5000  20.1740  $ Lead id - taper
12  RCC  0.0000  0.0000  0.0000  0.0000  0.0000  444.5000  31.5976  $ Lead od - taper
13  RCC  0.0000  0.0000  13.8176  0.0000  0.0000  416.8648  18.9103  $ Lead id
14  RCC  0.0000  0.0000  13.8176  0.0000  0.0000  416.8648  33.3271  $ Lead od
15  RCC  0.0000  0.0000  13.8176  0.0000  0.0000  416.8648  33.4645  $ Lead gap
16  RCC  0.0000  0.0000  3.8100  0.0000  0.0000  419.1000  49.8183  $ Neutron shield shell
17  RCC  0.0000  0.0000  5.0800  0.0000  0.0000  416.5600  49.2189  $ Neutron shield
18  RCC  0.0000  0.0000  450.2150  0.0000  0.0000  70.5612  49.8183  $ Upper limiter
19  RCC  0.0000  0.0000  -68.0212  0.0000  0.0000  71.8312  49.8183  $ Lower limiter
20  RCC  0.0000  0.0000  -68.0212  0.0000  0.0000  588.7974  49.8183  $ Container
C Radial Detector DRA (Surface)
100  RCC  0.0000  0.0000  -68.1212  0.0000  0.0000  588.9974  49.9183
101  PZ  -38.6713
102  PZ  -9.2215
103  PZ  20.2284
104  PZ  49.6783
105  PZ  79.1282
106  PZ  108.5780
107  PZ  138.0279
108  PZ  167.4778
109  PZ  196.9276
110  PZ  226.3775
111  PZ  255.8274
112  PZ  285.2772
113  PZ  314.7271
114  PZ  344.1770
115  PZ  373.6269
116  PZ  403.0767
117  PZ  432.5266
118  PZ  461.9765
119  PZ  491.4263
C Radial Detector DRB (1ft)
200  RCC  0.0000  0.0000  -98.6012  0.0000  0.0000  649.9574  80.2983
201  PZ  -66.1033
202  PZ  -33.6055
203  PZ  -1.1076
204  PZ  31.3903
205  PZ  63.8882
206  PZ  96.3860
207  PZ  128.8839
208  PZ  161.3818
209  PZ  193.8796
210  PZ  226.3775
211  PZ  258.8754
212  PZ  291.3732
213  PZ  323.8711
214  PZ  356.3690
215  PZ  388.8669
```

Figure 5.3-55 MCNP Input for 300 TPBARs at 30 Days Cool Time – Normal Conditions & Radial Biasing

```
215  PZ  388.8669
216  PZ  421.3647
217  PZ  453.8626
218  PZ  486.3605
219  PZ  518.8583
C Radial Detector DRC (1m)
300  RCC  0.0000  0.0000  -168.1212  0.0000  0.0000  788.9974  149.8183
301  PZ  -135.2463
302  PZ  -102.3714
303  PZ  -69.4965
304  PZ  -36.6216
305  PZ  -3.7467
306  PZ  29.1282
307  PZ  62.0030
308  PZ  94.8779
309  PZ  127.7528
310  PZ  160.6277
311  PZ  193.5026
312  PZ  226.3775
313  PZ  259.2524
314  PZ  292.1273
315  PZ  325.0022
316  PZ  357.8771
317  PZ  390.7520
318  PZ  423.6269
319  PZ  456.5017
320  PZ  489.3766
321  PZ  522.2515
322  PZ  555.1264
323  PZ  588.0013
C Radial Detector DRD (2m)
400  RCC  0.0000  0.0000  -268.1212  0.0000  0.0000  988.9974  249.8183
401  PZ  -226.9130
402  PZ  -185.7048
403  PZ  -144.4965
404  PZ  -103.2883
405  PZ  -62.0801
406  PZ  -20.8719
407  PZ  20.3364
408  PZ  61.5446
409  PZ  102.7528
410  PZ  143.9611
411  PZ  185.1693
412  PZ  226.3775
413  PZ  267.5857
414  PZ  308.7940
415  PZ  350.0022
416  PZ  391.2104
417  PZ  432.4186
418  PZ  473.6269
419  PZ  514.8351
420  PZ  556.0433
421  PZ  597.2515
422  PZ  638.4598
423  PZ  679.6680
C Radial Detector DRE (2m+Convey)
500  RCC  0.0000  0.0000  -269.1212  0.0000  0.0000  990.9974  321.9200
501  PZ  -227.8296
502  PZ  -186.5381
503  PZ  -145.2465
504  PZ  -103.9550
505  PZ  -62.6634
506  PZ  -21.3719
507  PZ  19.9197
508  PZ  61.2113
509  PZ  102.5028
510  PZ  143.7944
511  PZ  185.0859
512  PZ  226.3775
513  PZ  267.6691
514  PZ  308.9606
515  PZ  350.2522
516  PZ  391.5437
517  PZ  432.8353
518  PZ  474.1269
519  PZ  515.4184
520  PZ  556.7100
521  PZ  598.0015
522  PZ  639.2931
523  PZ  680.5846

C
C Materials List - Common Materials - v1.4
C
C Homogenized TPBARs
m1       3000  -2.138E+01  $ Li
        26000  -3.500E+02  $ Fe
        24000  -1.020E+02  $ Cr
        28000  -3.350E+02  $ Ni
         8000  -1.020E+02  $ O
        13000  -8.660E+01  $ Al
        33000  -2.750E-01  $ As
         5000  -1.140E-02  $ B
        56000  -1.680E-01  $ Ba
```

Figure 5.3-55 MCNP Input for 300 TPBARs at 30 Days Cool Time – Normal Conditions & Radial Biasing

```
         6000  -7.120E-01  $ C
        20000  -8.400E-01  $ Ca
        48000  -1.080E-04  $ Cd
        27000  -2.870E-01  $ Co
        29000  -2.370E-01  $ Cu
         1000  -5.380E-03  $ H
        72000  -2.150E-02  $ Hf
        19000  -1.050E+00  $ K
        12000  -4.240E-01  $ Mg
        25000  -1.130E+01  $ Mn
        42000  -1.700E+01  $ Mo
         7000  -7.370E-02  $ N
        11000  -1.050E+00  $ Na
        41000  -2.830E-01  $ Nb
        15000  -2.260E-01  $ P
        82000  -8.400E-02  $ Pb
        16000  -5.650E-02  $ S
        34000  -7.350E-02  $ Se
        14000  -6.360E+00  $ Si
        50000  -3.660E+00  $ Sn
        73000  -1.130E-01  $ Ta
        22000  -1.080E-02  $ Ti
        23000  -2.830E-01  $ V
        74000  -2.150E-02  $ W
        40000  -2.100E+02  $ Zr
        92000  -7.530E-04  $ U
C Water
m2       1001  6.6667E-01  $ H
         8016  3.3333E-01  $ O
mt2  lwtr.01
C Water/Glycol
m3       1001  -1.03651E-01
         8016  -6.75619E-01
         6000  -2.20730E-01
C Aluminum
m4      13027  -1.0
C Lead
m5      82000  -1.0
C Stainless Steel 304
m6      26000  -0.695
        24000  -0.190
        28000  -0.095
        25000  -0.020
C Aluminum Honeycomb Impact Limiter
m7  13027  -1.0
nonu  $ No subcritical multiplication
C
C Cell Importances
C
imp:p 1 26r 0
C
C Source Definition - Fuel Gamma - Tpbar_030d
C
sdef  x=d1  y=d2  z=d3  erg=d4
si1  -10.3505  10.3505
sp1  0  1
si2  -10.3505  10.3505
sp2  0  1
si3  30.1498  421.3098
sp3  0  1
si4  1.000E-02  2.000E-02  5.000E-02  1.000E-01  2.000E-01  3.000E-01
     4.000E-01  6.000E-01  8.000E-01  1.000E+00  1.220E+00  1.440E+00
     1.660E+00  2.000E+00  2.500E+00  3.000E+00  4.000E+00  5.000E+00
     6.500E+00  8.000E+00  1.000E+01  1.200E+01  1.400E+01
sp4  0.0000E+00  3.0175E+11  4.7611E+11  4.4009E+11  2.9577E+11  1.0398E+11
     1.8282E+12  2.5002E+12  4.6571E+12  8.5647E+12  1.6438E+12  1.4198E+12
     1.5788E+08  3.8151E+10  2.2794E+08  4.3234E+04  1.8781E+00  4.8373E-08
     0.0000E+00  0.0000E+00  0.0000E+00  0.0000E+00  0.0000E+00
mode p
nps  40000000
C
C ANSI/ANS-6.1.1-1977 - Gamma Flux-to-Dose Conversion Factors
C (mrem/hr)/(photons/cm2-sec)
C
de0  0.01  0.03  0.05  0.07  0.1  0.15  0.2
     0.25  0.3  0.35  0.4  0.45  0.5  0.55
     0.6  0.65  0.7  0.8  1  1.4  1.8
     2.2  2.6  2.8  3.25  3.75  4.25  4.75
     5  5.25  5.75  6.25  6.75  7.5  9
     11  13  15
df0  3.96E-03  5.82E-04  2.90E-04  2.58E-04  2.83E-04  3.79E-04  5.01E-04
     6.31E-04  7.59E-04  8.78E-04  9.85E-04  1.08E-03  1.17E-03  1.27E-03
     1.36E-03  1.44E-03  1.52E-03  1.68E-03  1.98E-03  2.51E-03  2.99E-03
     3.42E-03  3.82E-03  4.01E-03  4.41E-03  4.83E-03  5.23E-03  5.60E-03
     5.80E-03  6.01E-03  6.37E-03  6.74E-03  7.11E-03  7.66E-03  8.77E-03
     1.03E-02  1.18E-02  1.33E-02
C
C Weight Window Generation - Radial
C
wwg  2 0 0 0 0
wwp:p  5 3 5 0 -1 0
mesh  geom=cyl ref=0 0 226 origin=0.1 0.1 -568
      imesh  15.1 17.0 18.9 33.3 36.5 49.2 49.8 549.8
      iints  5 1 1 5 1 1 1 1
```

Figure 5.3-55 MCNP Input for 300 TPBARs at 30 Days Cool Time – Normal Conditions & Radial Biasing

```
      jmesh  500 541 550 558 568 598 989 1020 1049 1089 1589
      jints  1 1 1 1 1 1 1 1 1 1 1
      kmesh  0.5 1
      kints  1 1
wwge:p  1e-3 1 20
fc2 Radial Surface Tally
f2:p 100.1
fm2 7.6832E+15
fs2  -101  -102  -103  -104  -105  -106
     -107  -108  -109  -110  -111  -112
     -113  -114  -115  -116  -117  -118
     -119  T
tf2
fc12 Radial 1ft Tally
f12:p 200.1
fm12 7.6832E+15
fs12  -201  -202  -203  -204  -205  -206
     -207  -208  -209  -210  -211  -212
     -213  -214  -215  -216  -217  -218
     -219  T
tf12
fc22 Radial 1m Tally
f22:p 300.1
fm22 7.6832E+15
fs22 -301  -302  -303  -304  -305  -306
     -307  -308  -309  -310  -311  -312
     -313  -314  -315  -316  -317  -318
     -319  -320  -321  -322  -323  T
tf22
fc32 Radial 2m Tally
f32:p 400.1
fm32 7.6832E+15
fs32 -401  -402  -403  -404  -405  -406
     -407  -408  -409  -410  -411  -412
     -413  -414  -415  -416  -417  -418
     -419  -420  -421  -422  -423  T
tf32
fc42 Radial 2m+Convey Tally
f42:p 500.1
fm42 7.6832E+15
fs42 -501  -502  -503  -504  -505  -506
     -507  -508  -509  -510  -511  -512
     -513  -514  -515  -516  -517  -518
     -519  -520  -521  -522  -523  T
tf42
C
C
C Print Control
C
prdmp  -30 -60 1 2
print
```

Chapter 6

TABLE OF CONTENTS

TABLE OF CONTENTS (continued)

LIST OF FIGURES

LIST OF FIGURES (continued)

LIST OF FIGURES (continued)

LIST OF FIGURES (continued)

LIST OF TABLES

LIST OF TABLES (continued)

LIST OF TABLES (continued)

LIST OF TABLES (continued)

LIST OF TABLES (continued)

LIST OF TABLES (continued)

LIST OF TABLES (continued)

LIST OF TABLES (continued)

6.2.3 MTR Fuel Elements

The NAC-LWT MTR basket designs can transport up to 42 MTR research reactor fuel elements. This configuration consists of seven fuel elements placed radially in each of four, five or six axial fuel basket segments. The analysis provided herein is bounding for all MTR element loading configurations.

An MTR fuel element comprises fuel plates held in a parallel arrangement by thick aluminum slotted side plates. The number of fuel plates range from 10 to 23 per element. The fuel plates have a fuel meat composed of either U_3O_8-Al, U-Al or USi-Al. The listed fuel enrichment ranges up to slightly greater than 93 wt% ^{235}U. Thus, initial criticality analysis is performed at a nominal 93 wt% ^{235}U with a reactivity penalty of ±1 wt% ^{235}U applied to allow for enrichment variation up to 94 wt% and with a reactivity penalty of ±5 grams per element to allow for loading variation up to 355 grams per element. Figure 6.2.3-1 shows a cross-sectional view of the design basis MTR fuel element. The various design basis HEU, LEU and MEU MTR fuel characteristics are shown in Table 6.2.3-1, Table 6.2.3-2 and Table 6.2.3-3, respectively. The High Flux Beam Reactor (HFBR) is modeled in the criticality analysis as the design basis MTR fuel element design, and is shown in Figure 6.2.3-1. The listed fuel dimensions are extended to arrive at bounding fuel configurations in Section 6.4.3.

The bounding fuel dimensions provide for loading MTR fuel elements containing up to a maximum ^{235}U content of 460 grams (20 grams per plate in 23 plates), and LEU specific loads up to 736 grams ^{235}U (32 grams per plate in 23 plates).

MTR fuel plates can also be transported. The loose plates are placed inside an MTR plate canister prior to placement into the NAC-LWT MTR basket. The number of fuel plates in each canister is restricted to that of an equivalent MTR fuel element.

Figure 6.2.3-1 Design Basis HFBR MTR Fuel Element

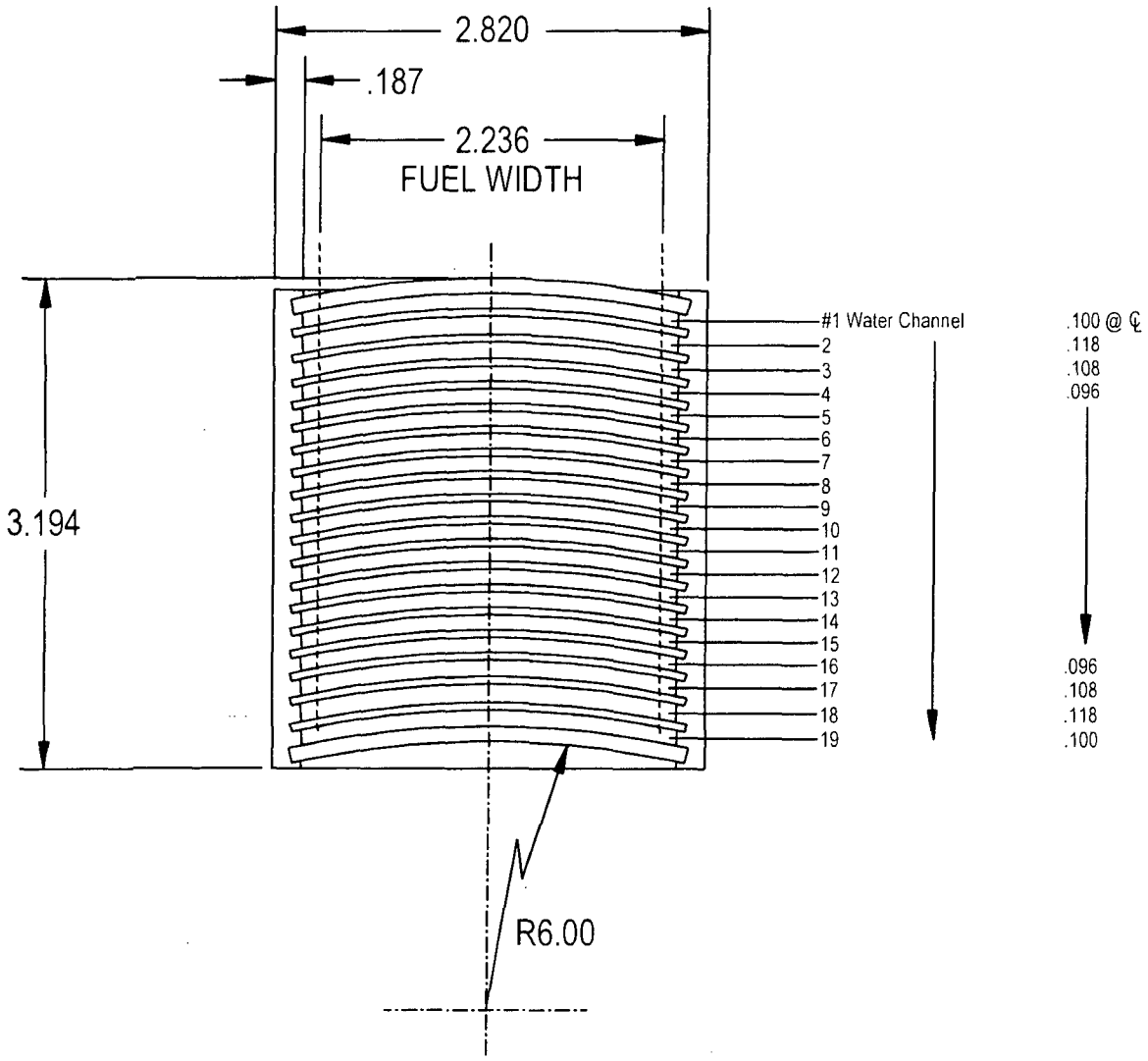

(18) INNER FUEL PLATES, 23 3/4" LONG, .050" THICK
FUEL ALLOY CORE 22 3/4 LONG, .021 THICK
CLADDING .0145" THICK. TOTAL U^{235} CONTENT - 351 g
OUTER ALUMINUM PLATES .100" THICK

6.3.3 MTR Fuel Elements

6.3.3.1 Description of Calculational Models

Since it is planned to transport many types of MTR fuel elements in the NAC-LWT, a determination of the most limiting, i.e., higher k_{eff}, element must be made for criticality purposes. Primary candidates for the most limiting element from the MTR elements in Table 6.2.3-1 through Table 6.2.3-3 are selected for analysis. Limiting elements are primarily selected based on fissile material content. After establishing trends in reactivity versus the elements' physical characteristics, bounding element characteristics are defined.

Evaluations are performed with three distinct fuel element models. First stage evaluations compare reactivities between intact fuel element types in an infinite array of basket unit cells. The second phase of the evaluations employs a basket model representing a cross section of the cask at infinite height and is used to establish maximum reactivity basket configurations and moderator densities. Finally, the limiting fuel element parameters are defined by a three-dimensional cask model containing six baskets.

In the KENO-Va fuel/basket unit cell analysis, a unit cell of the fuel element and the basket is modeled. This includes the fuel element in a 3.44" x 3.44" (8.738 cm x 8.738 cm) opening surrounded by a 5/16" (0.7938 cm) web. Water at 1 gm/cc is modeled between the fuel plates and in the basket hole surrounding the fuel element as shown in Figure 6.3.3-1. Reflecting boundary conditions are imposed on the sides, top and bottom simulating an infinite array with no axial leakage. This produces the k_{eff} of an infinite array of fuel elements and basket cells without modeling the entire basket and cask.

The KENO-Va model of the NAC-LWT cask with the design basis MTR fuel is derived from a radial slice of the NAC-LWT at the active fuel region as shown in Figure 6.3.3-2. As described in Section 6.4.3.1, the HFBR fuel element is selected as the most limiting assembly for the seven element basket design. The KENO-Va model has an axial extent of ± 10 cm, but with reflecting boundary conditions imposed on top and bottom, the model is effectively infinite in axial extent. The fuel elements, steel basket and cask with radial shield regions are explicitly represented. There are no homogenizations of fuel, moderator or basket. A CUBOID surrounds the casks with reflecting boundary conditions imposed on the sides, top and bottom simulating an infinite array of infinite axial extent. Moderator (H_2O) is allowed to vary in the cavity and outside the cask under normal conditions and, also, is allowed to vary inside the neutron shield tank under accident conditions. Cask center-to-center spacing is varied by adjusting the X-Y spacing of the CUBOID surrounding the cask. The k_{eff} results of this infinite array model are always below 0.95, including all biases and uncertainties.

Because the integrity of MTR fuel is not assured, the fuel plates of an element may assume a more optimum configuration during accident conditions. Therefore, KENO-Va models of the NAC-LWT cask with MTR element plates optimally spaced within the limits of the basket opening are analyzed to verify that the HFBR element is the most limiting MTR element.

The full cask models are identical in cross section to the axially infinite cask models, but rather than axially reflecting an active fuel elevation section of a basket module, six basket modules are stacked into an array. The module chosen for stacking is the intermediate basket module. While axial extents differ from the bottom and top modules, the basket horizontal cross section is identical in all modules. Axial variations are associated with the stacking of the units, with all units containing the 0.5-inch thick base plate. Figure 6.3.3-3 displays a side view of the intermediate module, with Figure 6.3.3-4 showing this basket module stacked six high inside the NAC-LWT. The cask bottom weldment and lid enclose the basket module array with its associated radial shielding. Reflecting boundary conditions on all sides simulate an infinite array of casks. This model neglects the impact limiters that would provide additional spacing between casks, and models the cask under accident conditions with the neutron shield voided.

As discussed in Section 6.4.3.10, the accident, optimum plate pitch configuration bounds the configuration of loose plates in the MTR plate canister. Therefore, no separate models are constructed for the loose plate evaluation.

For high fissile material payloads, the MTR basket may require partial loading. Figure 6.3.3-5 contains a basket layout with each potential loading position numbered to correlate the analysis in Section 6.4.3 to allowed loading locations. The model construction for partially loaded baskets is identical to that of the fully loaded basket with the exception of cask interior moderator material being assigned to the basket opening rather than an array of fuel plates and the side plates. For baskets containing multiple fuel types, the SCALE material information processor input DAN and RES variables are provided for the fuel material not included in the LATTICECELL description. The Dancoff factors are extracted from LATTICECELL calculations of the single fuel type runs.

6.3.3.2 Package Regional Densities

The composition densities (gm/cc) and nuclide number densities (atm/b-cm) calculated by the SCALE material information processor for a range of elements evaluated in subsequent criticality analyses are shown in Table 6.3.3-1. Additional material densities may be obtained from the sample input/output files provided in Section 6.6.

Figure 6.3.3-5 MTR Fuel Basket Module Loading Pattern

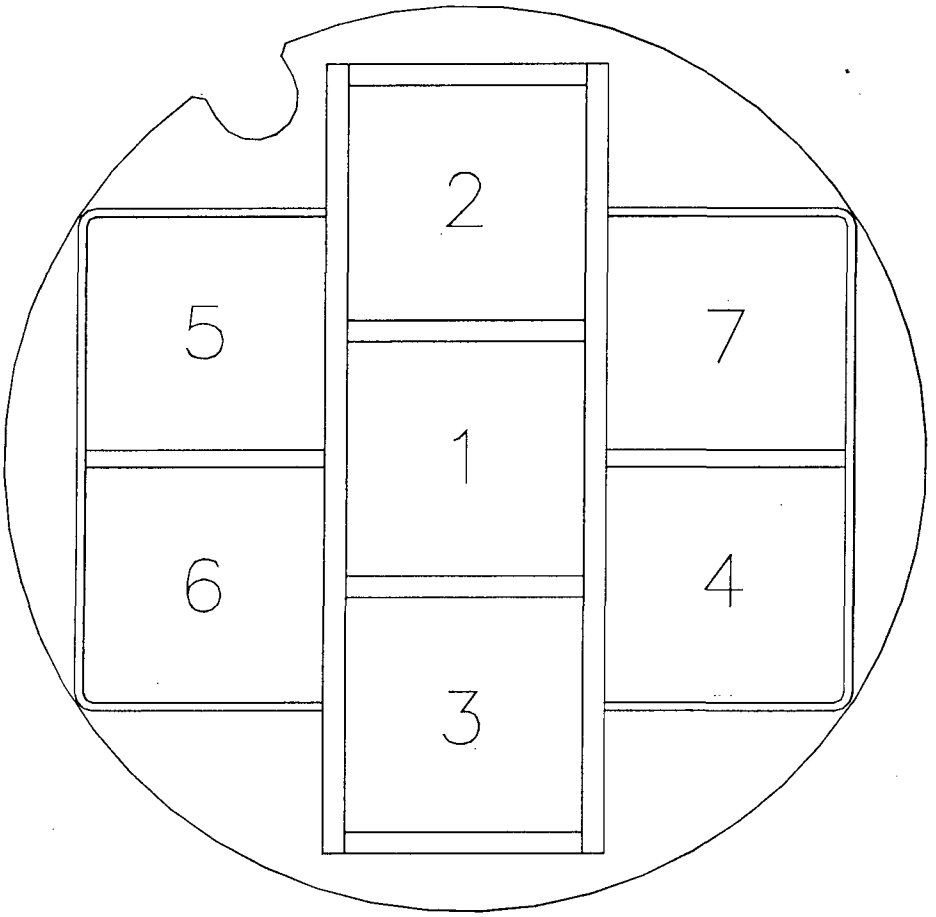

Table 6.3.3-1 Composition Densities Used in Criticality Analysis of MTR Fuel

Material	HFBR U_3O_8-Al	ORR U_3O_8-Al	GRR U-Al	IEA-R1 U-Al	THOR HEU UAl	THOR LEU U-Al	RSG-GAS U_3O_8-Al	BSR U_3Si_2	ZPRL U-Al
Density, gm/cc	3.99	3.32	2.90	4.10	2.90	4.10	4.80	5.01	4.10
Nuclide	atm/b-cm								
Uranium 235	2.852-3	1.978-3	1.382-3	8.493E-4	5.683E-4	8.542E-4	1.366E-3	2.358E-3	8.542E-4
Uranium 238	2.120-4	1.470-4	1.027-4	3.354E-3	4.12E-5	3.373E-3	5.480E-3	9.460E-3	3.373E-3
Silicon								7.505E-3	
Aluminum	5.630-2	5.222-2	5.178-2	5.502E-2	5.950E-2	5.499E-2	3.713E-2		5.499E-2
Oxygen	8.142-3	5.662-3					1.826E-2		

Material	RSG-GAS Clad	Al Clad	H_2O	304 Stainless Steel	Pb	ASTRA[1] UAl_x-A	MEUG UAl_x-A 35 wt%	CNEA U-Al	PRR U-Al
Density, gm/cc	2.7	2.699	0.998	7.920	11.350	1.57	2.08	2.76	3.03
Nuclide	atm/b-cm								
Uranium 235						1.786E-3	1.862E-3	1.320E-3	9.113E-4
Uranium 238						2.205E-3	3.415E-3	1.289E-4	5.743E-5
Magnesium	9.916E-4								
Aluminum	5.892E-2	6.024E-2				5.303E-2	5.303E-2	4.900E-2	5.911E-2
Oxygen			6.675E-2						
Hydrogen			3.338E-2						
Iron				5.936E-2					
Chromium				1.743E-2					
Nickel				7.721E-3					
Manganese				1.736E-3					
Lead					3.299E-2				

1. Based on 0.053 cm fuel meat width.

6.3.4 PWR and BWR Rods in a Rod Holder or Fuel Assembly Lattice

The NAC-LWT cask may transport up to 25 intact PWR or BWR fuel rods that are in a fuel rod holder or fuel assembly lattice. Up to 14 of 25 PWR or BWR fuel rods in a fuel rod holder may be classified as damaged.

6.3.4.1 Intact PWR or BWR Rods in a Rod Holder or Fuel Assembly Lattice

This section describes the methodology and the models used in the criticality analysis of the NAC-LWT with 25 design basis PWR or BWR rods in a rod holder or fuel assembly lattice. The methodology uses the CSAS25 criticality sequence from the SCALE 4.3 computer code package with the 27-group END/B-IV cross-section set. CSAS25 is the control sequence for the Material Information Processor (MIP), BONAMI, NITAWL-II and KENO-Va computer codes. The Material Information Processor generates number densities and prepares the geometry data for the resonance self shielding calculation. BONAMI and NITAWL-II calculate the resonance corrected cross sections in AMPX working format. KENO-Va uses the Monte Carlo technique to calculate the k_{eff} of a system. In these analyses, approximately 300 batches of 1000 neutrons per batch are tracked through the system.

Description of Calculational Models

The KENO-Va model of the NAC-LWT with 25 intact PWR or BWR fuel rods includes a triangular lattice formation of design basis rods centered in the cask cavity. No credit is taken for geometry control provided by either the rod holder or the fuel assembly lattice. The fuel rods, cask cavity and radial shields are explicitly modeled as shown in Figure 6.3.4-2. The KENO-Va model has two UNITs. UNIT 1 represents a PWR or BWR rod cell. It uses concentric CYLINDERs to model the fuel pellet, clad gap, and the cladding of the fuel rod. UNIT 2 is the GLOBAL UNIT containing CYLINDERs that model the cask, cavity, steel liners, and shields. There are 25 HOLEs placed in the cask cavity with X, Y, and Z coordinates that place rods in a triangular lattice position. The cask outer CYLINDER is surrounded by a CUBOID, and reflecting boundary conditions are imposed on the sides, top and bottom which simulates an infinite array of casks of infinite length. Adjusting the X-Y spacing of the CUBOID surrounding the cask varies cask center-to-center spacing. The material properties used in the model are shown in Table 6.3.4-1.

To determine the optimum configuration, cask k_{eff} is studied as a function of fuel rod pitch within the cask cavity. This is done by changing the coordinates of the rod HOLEs. Twenty different pitch values that range from the most compact configuration to the most dispersed configuration are evaluated. Figure 6.3.4-1 shows a simplified view of the cask with three different configurations. The analysis is performed for accident conditions with water at 1 gm/cc modeled between the fuel rods, in the cask cavity surrounding the rods. In addition, the neutron shield and

cask exterior contain no water. The analysis is performed with these conditions with a dry and a wet clad gap.

An infinite array KENO-Va model of the NAC-LWT cask with 25 PWR or BWR fuel rods at the optimum pitch is used to evaluate the reactivity of the cask. The water moderator is allowed to vary in the cavity and outside the cask under normal conditions and is allowed to vary inside the neutron shield tank under accident conditions. Cask center-to-center spacing is varied by adjusting the dimensions of the CUBOID surrounding the cask. The k_{eff} results of this infinite array model are always below 0.95 including all biases and uncertainties.

Package Regional Densities

The composition densities (gm/cc) and nuclide number densities (atm/b-cm) calculated by the material information processor and used in the subsequent criticality analyses are shown in Table 6.3.4-1.

6.3.4.2 Damaged PWR and BWR Rods in a Rod Holder

This section describes the methodology and the models used in the criticality analysis of the NAC-LWT with 25 PWR or BWR rods, up to 14 of which may be damaged. Although the NAC-LWT payload is limited to 14 damaged fuel rods in a 25-rod shipment, the analysis conservatively considers all 25 rods as failing during transport.

The methodology uses the CSAS25 criticality sequence from the SCALE 4.3 computer code package with the 27-group ENDF/B-IV cross-section set. CSAS25 is the control sequence for the Material Information Processor, BONAMI, NITAWL-II and KENO-Va computer codes. The Material Information Processor generates number densities and prepares the geometry data for the resonance self-shielding calculation. BONAMI and NITAWL-II calculate the resonance corrected cross-sections in AMPX working format. KENO-Va uses the Monte Carlo technique to calculate the k_{eff} of a system. In these analyses, approximately 300 batches of 1,000 neutrons per batch are tracked through the system.

Description of Calculational Models

Two calculational models were employed to evaluate the NAC-LWT system reactivity with damaged fuel rods.

The first model explicitly models unclad UO_2 rods in a triangular pitch. System reactivity is maximized by increasing the number of fuel rods while decreasing the rod diameter to conserve fuel area in the infinite height model (i.e., reflective boundary conditions are placed on the active fuel region). Fuel rod arrays of 25, 37 and 61 rods are considered. The latter two arrays are hexagonal with no lattice vacancies. For each of the three postulated rod arrays, the maximum

reactivity pitch is determined for both PWR and BWR rods. System reactivity is determined using an axially infinite cask model in an infinite cask array. In establishing the trend of increasing reactivity with larger rod arrays, k_{eff} values for the explicit rod cases are calculated with full density water in the cask interior, exterior, and neutron shield. Void exterior and void neutron shield (accident) conditions are considered for the 61 rod array in addition to preferential flooding of the cask cavity. The maximum reactivity configuration for 61 rods (with an active fuel cross-sectional area equivalent to 25 intact rods) is shown in Figure 6.3.4-3. Fuel rod arrays with greater than 61 rods are not considered. As demonstrated in Section 6.4.4.2, increasing the number of fuel rods modeled increases the cross-sectional area of the most reactive lattice. The cross-sectional area required for the 61-rod array exceeds the area available in the interior of the rod holder and, therefore, represents a bounding, conservative configuration.

The second model considers a homogenized mixture of UO_2 and water with a square cross-section and finite axial height within the NAC-LWT fuel rod holder. The square cross-sectional area of the rod holder is conservatively based on the exterior width of the rod holder, 13.97 cm. Based on the maximum BWR pellet diameter and fuel length of 150 inches, the finite axial height of the fuel mixture is calculated based on various UO_2 volume fractions. The UO_2 volume fraction is varied until the maximum reactivity is determined. System reactivity is determined using an infinite cask array with a periodic reflection axial boundary condition. Given the limiting UO_2/water fuel material description, water moderation variations are considered in the cask cavity (outside the rod holder), the cask exterior, and the cask neutron shield. The neutron shield material definition is tied to the exterior moderator definition; a void exterior includes a void neutron shield. Thus, the accident condition of loss of neutron shielding is explicitly modeled when the exterior moderator is set to void. Figures 6.3.4-4 and 6.3.4-5 give dimensions of the maximum reactivity homogenized mixture configuration of finite extent.

Package Regional Densities

The composition densities (gm/cc) and nuclide number densities (atm/b-cm) calculated by the material information processor and used in the subsequent criticality analyses are identical to those shown for intact fuel evaluations, Table 6.3.4-1. Additional material densities may be obtained from the sample input/output file provided in Section 6.6.10.

Figure 6.3.4-1 Triangular Pitch Lattice Formation of 25 PWR Rods

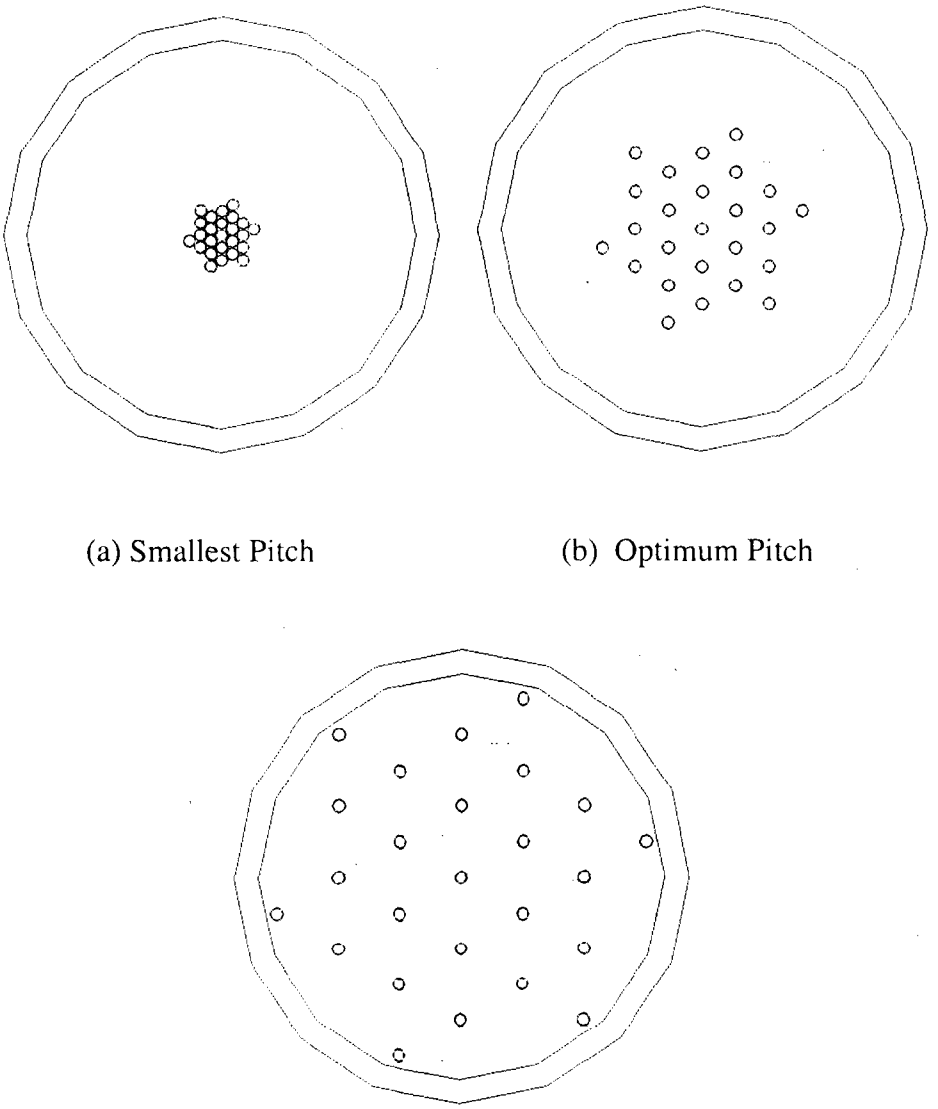

(a) Smallest Pitch

(b) Optimum Pitch

(c) Maximum Pitch

6.4.3.12 has demonstrated that the HEU fuel is more reactive than LEU and MEU fuel. Therefore, only the HEU fuel is evaluated in this section. Additional evaluations are provided with the limiting characteristics of an HEU MTR element containing up to 21g ^{235}U per plate.

The models employed are similar to those of Section 6.4.3.12 with any differences originating in the modified minimum plate thickness and the amount of axial non-active fuel region material (or spacer material) in the basket. Section 6.4.3.12 relied on a minimum plate thickness of 0.115 cm and a minimum 0.7 cm offset of the active fuel region to the end of the fuel element. The offset of 0.7 cm assured an active fuel region separation of 2.67 cm (2 x 0.7 cm plus the 1.27 cm base plate). Section 6.4.3.12 analyses have shown that increasing the axial separation distance between the fissile material or increasing plate thickness will decrease system reactivity. Both of these effects are taken credit for in the evaluation of the high fissile material loaded MTR element. The minimum plate thickness and element axial end region hardware length are adjusted until k_s is below 0.95.

Evaluations for various amounts of axial hardware material reveal that with only this change, a minimum 4 cm offset, 8 cm total hardware (spacer material) must be provided for the system reactivity to remain below 0.95 (Table 6.4.3-23). Similarly, Table 6.4.3-23 shows that increasing the fuel plate thickness to 0.123 cm (1.23 mm) is insufficient by itself to reduce reactivity below 0.95. A combination of 2 cm of hardware at the top and bottom of the element, for a total of 4 cm fuel element hardware, in combination with the 0.123 cm minimum plate thickness produces the required result. While the model employed a symmetric 2 cm fuel plate extension on each end of the active fuel region, any combination of top or bottom hardware or basket spacer material resulting in a 4 cm total is sufficient to assure criticality safety. Based on this evaluation, it is permissible to load a 460 g ^{235}U element, provided that the fuel plates are at minimum 0.123 cm in thickness and that cropping of the fuel element or basket spacer material assures 4 cm axial element material separating the active fuel region. Note that 4 cm of fuel element or spacer material plus the 1.27 cm basket base plate result in a total 5.27 cm of axial separation for the limiting configuration. An enhanced fuel characteristic set is generated and shown in Table 6.4.3-22 to reflect the requirements for loading of the increased fissile material element.

At 21g ^{235}U per plate, additional loading constraint must be applied. The evaluations of the 21g ^{235}U per plate HEU elements are based on the 0.7 cm minimum offset of the active fuel region and decrease the number of plates per element and/or increase the plate minimum thickness. The

results of this evaluation are added to Table 6.4.3-23 with a bounding set of fuel characteristics added to Table 6.4.3-22.

6.4.3.14 LEU MTR Fuel Elements with Increased Active Fuel Width and/or Increased Fissile Material Mass

Increased Active Fuel Width

This section determines the requirements for loading LEU fuel elements with an active fuel width larger than 6.6 cm. Section 6.4.3.12 has demonstrated an active fuel width of 7.3 cm yields a k_s of greater than 0.95. This section extends the licensing envelope to a maximum active fuel width of 7.0, 7.1 or 7.15 cm for LEU fuel.

The models employed are similar to those of Section 6.4.3.12 with differences originating in the modifications made in active fuel width, plate thickness, ^{235}U loading per plate, active fuel height, and number of fuel plates.

The 7.0 cm active fuel width evaluation shows that plate thickness, ^{235}U loading per plate, and active fuel height adjustments were sufficient to reduce system reactivity below 0.95. Evaluations of the 7.1 cm active fuel width envelope relied on changes in the number of fuel plates and plate thickness. Extending the active fuel width to 7.15 cm required an increased plate minimum thickness (0.119 cm) in conjunction with a decreased number of fuel plates, increased minimum active fuel height, or decreased fissile material load per plate. Evaluation results are shown in Table 6.4.3-24. A summary of the allowable LEU fuel characteristics is shown in Table 6.4.3-25.

Increased Fissile Material Mass

LEU fuel elements may contain a ^{235}U content of up to 32 grams per plate. Based on the analysis trends observed in the previous sections, a full cask load of elements containing fissile material significantly above 22 grams per plate will exceed safety limits. Additional analyses are, therefore, performed limiting the contents of the basket module with 32 gram ^{235}U plates to four elements per basket. The center row of elements (locations 1, 2 and 3 in Figure 6.3.3-5) are not loaded. The LEU plate characteristics applied are a maximum 7.3 cm active fuel width, a minimum 56 cm fuel height, and a minimum 0.115 cm plate thickness. Twenty-three plate elements are modeled.

Table 6.4.3-27 contains the results of the criticality evaluations with the revised model. Each of the bounding MTR configurations (summarized in Table 6.4.3-26) is evaluated at full load and with a partial load in the top and bottom baskets. A single fuel type is included in this analysis

set. As shown in the Table 6.4.3-26, the system reactivity of the 32 gram ^{235}U per plate element (Case 25%-J) is above safety limits for both full and partially loaded top and bottom baskets (k_s must be less than 0.95). Partially loading the top and bottom baskets reduces system reactivity by approximately 0.01 Δk across all fuel types. Loading the high fissile mass (high reactivity) 32 g ^{235}U per plate LEU elements in a partially loaded basket, and locating the partially loaded baskets at the top and bottom of the basket stack have no significant effect on system reactivities — i.e., system reactivity is controlled by the adjacent (cask center) baskets containing higher reactivity, fully loaded baskets.

An evaluation of six baskets with four elements per basket of the 32 gram ^{235}U per plate LEU fuel element results in a k_{eff} of approximately 0.7. This clearly demonstrates that removing three elements from the basket reduces the basket reactivity significantly, and that replacing any fully loaded basket by the partially loaded high fissile material content element basket is bounded by the evaluations of a fully loaded (42 element) cask configuration.

Loading of the high fissile material elements is, therefore, allowed provided that the elements meet the characteristics of Table 6.4.3-28, including the limitation that any basket containing LEU MTR plates above 22 gram ^{235}U must be limited to four elements (or an equivalent number of fuel plates in a plate canister) with no fuel material in basket openings 1, 2 and 3 per Figure 6.3.3-5.

Table 6.4.3-1 Fuel/Basket Unit Cell k_{eff} versus MTR Fuel Element Type

MTR Type	Plate Pitch (cm)	^{235}U Loading (grams)	$k_{eff} \pm \sigma$
HEU ORR	0.422	285	1.2475 ± 0.0025
LEU BSR	0.422	340	1.2486 ± 0.0022
HEU HFBR	0.371[1]	351	1.2396 ± 0.0022
HEU NISTR	0.422[2]	362	1.1808 ± 0.0027
LEU RSG-GAS	0.369	271	1.1502 ± 0.0033
HEU PRR	0.432	247	1.1594 ± 0.0027
LEU THOR	0.761	210	1.0600 ± 0.0032
LEU ZPRL	0.776	210	1.0596 ± 0.0030
LEU IEA-R1	0.431	180	1.0219 ± 0.0039
HEU THOR	0.761	140	0.9479 ± 0.0039
GRR	0.442	187.2	1.0982 ± 0.0037

1. Variable outer plate spacing.
2. Two half-sections stacked together in the basket cell. Section cuts are a minimum of 1 inch from active fuel on each end.

Table 6.4.3-2 Cask k_{eff} versus Fuel Plate Spacing

Fuel Type	# of Fuel Plates	Pitch (cm)	k_{eff}	σ	$k_{eff} + 2\sigma$
HFBR	13	0.6330*	0.7901	0.0034	0.7969
	14	0.5878*	0.8120	0.0036	0.8192
	15	0.5486*	0.8161	0.0040	0.8241
	16	0.5142*	0.8341	0.0034	0.8409
	17	0.4840*	0.8398	0.0030	0.8458
	18	0.4572*	0.8471	0.0033	0.8537
	18	0.3708	0.7918	0.0043	0.8004
	18	0.2921	0.7131	0.0040	0.7211
	18	0.2250	0.6462	0.0039	0.6540
	18	0.1270	0.5166	0.0035	0.5236
BSR	19	0.4782	0.8375	0.0027	0.8429
	19	0.3878	0.7967	0.0029	0.8027

* Maximum possible spacing of fuel and end plates of HFBR fuel element within basket opening.

Table 6.4.3-3 MTR Basket Geometric Tolerances

Component	Dimension / Tolerance
Basket Opening	3.44 inch + 0.04 / - 0.06 inch
5/16 inch Plate Thickness	0.3125 nom. / 0.28 inch min.
1/4 inch Plate Thickness	0.25 nom. / 0.24 inch min.
11 Gauge Sheet	0.12 inch min.

Table 6.4.3-4 MTR Basket/Intact Fuel Element Geometric Tolerances and Mechanical Perturbations Results

Configuration	k_{eff}	σ	$k_{eff} + 2\sigma$
Elements Moved in Close	0.8023	0.0021	0.8065
Min. Basket Plate Thickness	0.8014	0.0032	0.8078
Elements Moved in Closest	0.7969	0.0021	0.8011
Nominal Configuration	0.7943	0.0031	0.8005
Elements Resting on Basket	0.7928	0.0020	0.7968
Max. Basket Opening	0.7898	0.0035	0.7960
Min. Basket Opening	0.7931	0.0032	0.7995
Elements Moved Out	0.7759	0.0019	0.7797
Elements Moved Out Furthest	0.7667	0.0020	0.7707

Table 6.4.3-5 MTR Basket/Optimally Spaced Fuel Plates Geometric Tolerances and Mechanical Perturbations Results

Configuration	k_{eff}	σ	$k_{eff} + 2\sigma$
Min. Basket Plate Thickness	0.8585	0.0035	0.8655
Plates Moved In	0.8577	0.0020	0.8617
Nominal Configuration	0.8471	0.0033	0.8537
Max. Basket Opening	0.8485	0.0037	0.8559
Min. Basket Opening	0.8406	0.0031	0.8468
Plates Moved Out	0.8290	0.0019	0.8328

Table 6.4.3-6 Reactivity with MTR Fuel vs. Basket Moderator Density, Normal Conditions, Dry Exterior, Infinite Array of Casks

Moderator Density	Casks Touching	2 Foot Surf.-to-Surf.	ISO Container 242.84 cm Pitch	Touching, Center Position Empty
Dry Exterior, Vary Internal Density				
0.0000	0.0705 ± 0.0004	0.0700 ± 0.0004	0.0716 ± 0.0004	N/A
0.0010	0.0728 ± 0.0004	0.0725 ± 0.0004	0.0722 ± 0.0004	N/A
0.0100	0.0912 ± 0.0006	0.0910 ± 0.0005	0.0912 ± 0.0005	0.0793 ± 0.0010
0.0250	0.1227 ± 0.0007	0.1231 ± 0.0007	0.1246 ± 0.0008	N/A
0.0500	0.1789 ± 0.0009	0.1795 ± 0.0009	0.1779 ± 0.0009	0.1612 ± 0.0018
0.0750	0.2285 ± 0.0011	0.2294 ± 0.0011	0.2292 ± 0.0011	N/A
0.1000	0.2741 ± 0.0012	0.2772 ± 0.0013	0.2771 ± 0.0012	0.2513 ± 0.0025
0.2000	0.4207 ± 0.0016	0.4211 ± 0.0016	0.4178 ± 0.0017	0.3886 ± 0.0032
0.4000	0.5868 ± 0.0019	0.5861 ± 0.0018	0.5864 ± 0.0019	0.5170 ± 0.0037
0.6000	0.6831 ± 0.0021	0.6792 ± 0.0020	0.6817 ± 0.0019	0.5829 ± 0.0037
0.8000	0.7511 ± 0.0020	0.7515 ± 0.0020	0.7539 ± 0.0020	0.6289 ± 0.0041
0.9000	0.7830 ± 0.0019	0.7773 ± 0.0021	0.7827 ± 0.0020	N/A
1.0000	0.8072 ± 0.0019	0.8105 ± 0.0020	0.8102 ± 0.0019	0.6639 ± 0.0041
Wet Interior, Vary External Density				
0.0000	0.8139 ± 0.0021	0.8067 ± 0.0020	0.8080 ± 0.0022	N/A
0.0010	0.8116 ± 0.0020	0.8128 ± 0.0020	0.8136 ± 0.0023	N/A
0.0100	0.8108 ± 0.0021	0.8061 ± 0.0019	0.8085 ± 0.0022	N/A
0.0250	0.8078 ± 0.0019	0.8107 ± 0.0021	0.8074 ± 0.0021	N/A
0.0500	0.8066 ± 0.0022	0.8082 ± 0.0020	0.8072 ± 0.0020	N/A
0.0750	0.8113 ± 0.0020	0.8054 ± 0.0022	0.8082 ± 0.0022	N/A
0.1000	0.8097 ± 0.0020	0.8075 ± 0.0019	0.8081 ± 0.0019	N/A
0.2000	0.8133 ± 0.0020	0.8075 ± 0.0023	0.8087 ± 0.0020	N/A
0.4000	0.8096 ± 0.0018	0.8113 ± 0.0020	0.8087 ± 0.0018	N/A
0.6000	0.8110 ± 0.0018	0.8098 ± 0.0020	0.8103 ± 0.0020	N/A
0.8000	0.8072 ± 0.0023	0.8108 ± 0.0019	0.8096 ± 0.0018	N/A
0.9000	0.8133 ± 0.0021	0.8080 ± 0.0021	0.8069 ± 0.0020	N/A
1.0000	0.8107 ± 0.0024	0.8096 ± 0.0022	0.8103 ± 0.0021	N/A
Vary Interior and Exterior Density Simultaneously				
0.0000	0.0705 ± 0.0004	0.0700 ± 0.0004	0.0716 ± 0.0004	N/A
0.0010	0.0736 ± 0.0004	0.0724 ± 0.0005	0.0733 ± 0.0004	N/A
0.0100	0.0906 ± 0.0005	0.0909 ± 0.0005	0.0895 ± 0.0005	N/A
0.0250	0.1239 ± 0.0007	0.1244 ± 0.0007	0.1245 ± 0.0007	N/A
0.0500	0.1774 ± 0.0008	0.1774 ± 0.0009	0.1778 ± 0.0009	N/A
0.0750	0.2291 ± 0.0011	0.2272 ± 0.0010	0.2307 ± 0.0010	N/A
0.1000	0.2750 ± 0.0011	0.2741 ± 0.0012	0.2753 ± 0.0013	N/A
0.2000	0.4204 ± 0.0016	0.4215 ± 0.0016	0.4187 ± 0.0015	N/A
0.4000	0.5809 ± 0.0018	0.5829 ± 0.0018	0.5825 ± 0.0019	N/A
0.6000	0.6833 ± 0.0020	0.6811 ± 0.0021	0.6802 ± 0.0020	N/A
0.8000	0.7547 ± 0.0020	0.7521 ± 0.0019	0.7495 ± 0.0022	N/A
0.9000	0.7821 ± 0.0021	0.7822 ± 0.0018	0.7828 ± 0.0021	N/A
1.0000	0.8107 ± 0.0024	0.8096 ± 0.0022	0.8103 ± 0.0021	N/A

Table 6.4.3-7 Reactivity with MTR Fuel vs. Basket Moderator Density, Accident Conditions, Dry Exterior, Infinite Array of Casks

Moderator Specific Gravity	Casks Touching	2 Foot Surface-to-Surface	ISO 242.84 cm Pitch
Dry Exterior, Vary Internal Density			
0.0000	0.3126 ± 0.0009	0.1031 ± 0.0005	0.1000 ± 0.0005
0.0010	0.3169 ± 0.0009	0.1071 ± 0.0005	0.1024 ± 0.0005
0.0100	0.3493 ± 0.0010	0.1316 ± 0.0006	0.1266 ± 0.0006
0.0250	0.3980 ± 0.0010	0.1720 ± 0.0008	0.1686 ± 0.0007
0.0500	0.4629 ± 0.0011	0.2343 ± 0.0010	0.2336 ± 0.0010
0.0750	0.5152 ± 0.0013	0.2910 ± 0.0010	0.2845 ± 0.0012
0.1000	0.5592 ± 0.0015	0.3425 ± 0.0012	0.3335 ± 0.0013
0.2000	0.6643 ± 0.0018	0.4836 ± 0.0014	0.4830 ± 0.0016
0.4000	0.7625 ± 0.0019	0.6440 ± 0.0018	0.6424 ± 0.0019
0.6000	0.8138 ± 0.0021	0.7390 ± 0.0019	0.7367 ± 0.0020
0.8000	0.8598 ± 0.0021	0.8138 ± 0.0021	0.8061 ± 0.0021
0.9000	0.8777 ± 0.0022	0.8428 ± 0.0021	0.8411 ± 0.0019
1.0000	0.9005 ± 0.0021	0.8717 ± 0.0021	0.8690 ± 0.0019
Wet Interior, Vary External Density			
0.0000	0.9005 ± 0.0021	0.8694 ± 0.0021	0.8739 ± 0.0020
0.0010	0.8975 ± 0.0020	0.8686 ± 0.0023	0.8680 ± 0.0022
0.0100	0.8851 ± 0.0022	0.8673 ± 0.0020	0.8683 ± 0.0021
0.0250	0.8737 ± 0.0022	0.8648 ± 0.0022	0.8671 ± 0.0020
0.0500	0.8709 ± 0.0020	0.8656 ± 0.0021	0.8648 ± 0.0022
0.0750	0.8681 ± 0.0020	0.8648 ± 0.0020	0.8658 ± 0.0020
0.1000	0.8645 ± 0.0019	0.8614 ± 0.0020	0.8618 ± 0.0020
0.2000	0.8625 ± 0.0020	0.8632 ± 0.0021	0.8616 ± 0.0021
0.4000	0.8625 ± 0.0020	0.8601 ± 0.0022	0.8594 ± 0.0019
0.6000	0.8592 ± 0.0021	0.8589 ± 0.0020	0.8591 ± 0.0021
0.8000	0.8600 ± 0.0020	0.8611 ± 0.0020	0.8589 ± 0.0021
0.9000	0.8629 ± 0.0020	0.8599 ± 0.0022	0.8584 ± 0.0021
1.0000	0.8606 ± 0.0023	0.8591 ± 0.0022	0.8602 ± 0.0020
Vary Interior and Exterior Density Simultaneously			
0.0000	0.3126 ± 0.0009	0.1031 ± 0.0005	0.1000 ± 0.0005
0.0010	0.2985 ± 0.0008	0.1054 ± 0.0005	0.1025 ± 0.0005
0.0100	0.2306 ± 0.0008	0.1270 ± 0.0006	0.1245 ± 0.0007
0.0250	0.2097 ± 0.0009	0.1579 ± 0.0008	0.1594 ± 0.0008
0.0500	0.2286 ± 0.0010	0.2072 ± 0.0010	0.2092 ± 0.0009
0.0750	0.2640 ± 0.0011	0.2534 ± 0.0011	0.2533 ± 0.0012
0.1000	0.2996 ± 0.0011	0.2963 ± 0.0012	0.2972 ± 0.0012
0.2000	0.4348 ± 0.0015	0.4337 ± 0.0015	0.4332 ± 0.0017
0.4000	0.6048 ± 0.0017	0.6066 ± 0.0020	0.6037 ± 0.0018
0.6000	0.7126 ± 0.0021	0.7144 ± 0.0020	0.7134 ± 0.0019
0.8000	0.7960 ± 0.0019	0.7892 ± 0.0022	0.7984 ± 0.0022
0.9000	0.8295 ± 0.0020	0.8303 ± 0.0021	0.8289 ± 0.0021
1.0000	0.8606 ± 0.0023	0.8591 ± 0.0022	0.8602 ± 0.0020

Table 6.4.3-8 MTR Fuel Element Rotation Perturbation Study

Case	k_{eff}	σ	$k_{eff} + 2\sigma$
All Horizontal Plates	0.6011	0.0027	0.6065
Corners-Only Horizontal	0.6033	0.0025	0.6083
Corners-Only Vertical	0.6045	0.0027	0.6099
All Vertical Plates	0.6053	0.0027	0.6107

Table 6.4.3-9 MTR Basket/Center Fuel Element Perturbation Study

Fuel Type	Center Element Configuration	k_{eff}	σ	$k_{eff} + 2\sigma$
Intact Elements	Centered	0.8107	0.0020	0.8147
Intact Elements	Corner	0.8066	0.0021	0.8108
Intact Elements	Right	0.8122	0.0021	0.8164
Intact Elements	Up	0.8133	0.0021	0.8175
Expanded Plates	Centered	0.8606	0.0023	0.8652
Expanded Plates	Right	0.8547	0.0019	0.8585

Table 6.4.3-10 Mixed HEU/LEU MTR Fuel Perturbation Study

Case	k_{eff}	σ	$k_{eff} + 2\sigma$
9 HEU	0.6011	0.0027	0.6065
8 HEU 1 LEU centered	0.6033	0.0030	0.6093
6 HEU 3 LEU center row	0.5976	0.0030	0.6036
4 HEU 5 LEU + pattern	0.5894	0.0026	0.5946
8 LEU 1 HEU centered	0.5789	0.0027	0.5843
9 LEU	0.5685	0.0025	0.5735

Table 6.4.3-11 MTR Single Package 10 CFR 71.55(b)(3) Evaluation k_{eff} Summary

Description	$k_{eff} \pm \sigma$	$k_{eff} + 2\sigma$
Single Cask / Inner Shell Reflected with H_2O	0.7682 ± 0.0021	0.7724
Single Cask / Inner Shell and Lead Reflected with H_2O	0.8043 ± 0.0021	0.8085
Single Cask / Inner Shell, Lead & Outer Shell Reflected with H_2O	0.8047 ± 0.0022	0.8091
Single Intact Cask Reflected with H_2O	0.8094 ± 0.0021	0.8136

Table 6.4.3-12 MTR Fuel Uranium Weight Percentage Perturbations

Fuel Type	U wt%(1)	Effective Al Density (g/cm³)	% of Theoretical Al Density	k_{eff}	Δk_{eff}
HEU HFBR	30%(2)	2.58	96%	1.2396 ± 0.0022	n/a
	45%	1.25	46%	1.2426 ± 0.0027	0.0030
HEU PRR	12.5%(2)	2.65	98%	1.1594 ± 0.0027	n/a
	18.75%	1.64	61%	1.1679 ± 0.0025	0.0085
	33%	0.77	28%	1.1763 ± 0.0024	0.0169
HEU THOR	8.0%(2)	2.67	99%	0.9479 ± 0.0039	n/a
	12%	1.75	65%	0.9530 ± 0.0035	0.0051
	20%	0.95	35%	0.9647 ± 0.0035	0.0168
LEU THOR	40%(2)	2.46	91%	1.0600 ± 0.0032	n/a
	50%	1.64	61%	1.0628 ± 0.0035	0.0028
	60%	1.09	41%	1.0718 ± 0.0036	0.0118
LEU IEA	40%(2)	2.47	91%	1.0219 ± 0.0039	n/a
	50%	1.64	61%	1.0266 ± 0.0036	0.0047
	60%	1.09	40%	1.0272 ± 0.0042	0.0053

Notes:

(1) Uranium in Fuel Composition (wt %)
(2) nominal value
n/a – not applicable

Table 6.4.3-13 MEU MTR Unit Cell k_{eff} Comparison (Enrichment Variation)

Description	k_{eff}	σ
13.91 g ^{235}U - 44.44 wt% ^{235}U – Al Clad	1.2476	0.0008
13.91 g ^{235}U - 44.44 wt% ^{235}U – AlMg Clad	1.2475	0.0008
14.5 g ^{235}U – 35 wt% ^{235}U – Al Clad	1.2501	0.0008
14.5 g ^{235}U – 50 wt% ^{235}U – Al Clad	1.2642	0.0008
14.5 g ^{235}U – 80 wt% ^{235}U – Al Clad	1.2844	0.0008

Table 6.4.3-14 MEU MTR Basket k_{eff} Comparison (Plate Location)

Number of Plates	Configuration[1]	k_{eff}	σ
23	A	0.8242	0.0011
22	A	0.8230	0.0010
21	A	0.8176	0.0010
23	B	0.8312	0.0010
22	B	0.8265	0.0010
21	B	0.8206	0.0010

Notes:

1 Configuration A places the outer fuel plates separated from the basket plates by a space equal to one-half the spacing between the interior plates. Configuration B places the plates directly against the basket plates.

Table 6.4.3-15 Physical Characteristics of McMaster MTR Fuels

Fuel Parameters	10 Plate	18 Plate
Element Width (cm)	7.61	7.61
Element Depth (cm)	8.03	8.23
Side Plate Thickness (cm)	0.48 (0.19 inch)	0.48
No. of Plates	10	18
Plate Thickness (cm)	0.153 ± 0.005	0.127 ± 0.005
Active Fuel Length (cm)	61.0	59.1 to 60.0
Active Fuel Width (cm)	7.3	5.92 to 6.54
Active Fuel Thickness (cm)	0.051	0.0508
Clad Thickness (cm)	0.05 ± 0.008	0.038 ± 0.008
Plate Pitch	0.319 ± 0.004 inch	0.442 ± 0.004 cm
Fuel Composition	U-Al	U-Al
Wt% ^{235}U (nominal)	93.1 ± 0.1	93.1 ± 0.1
^{235}U per Fuel Element (g)	161.4 ± 0.1	212.1 ± 6
^{235}U per Plate (g)	16.0 ± 0.48	12.25 ± 0.37
Alloy per Plate (Al) (g)	58.9	50.4

Table 6.4.3-16 Reactivity of Various Parameter Variations for 10-Plate McMaster Element

k_{eff}	σ	$k_{eff}+2\sigma$	Δk_{eff}	$\Delta k_{eff}/\sigma$	Description
1.11679	0.00083	1.11845	-	-	nominal fuel (0.153 cm plate, 0.051 cm meat, 0.8103 cm pitch)
1.11451	0.00077	1.11605	-0.00240	-3.1	decreased pitch -0.010 cm
1.11975	0.00078	1.12131	0.00286	3.7	increased pitch +0.010 cm
1.12042	0.00079	1.12200	0.00069	0.9	max pitch and decreased plate thickness - 0.008
1.12020	0.00080	1.12180	0.00049	0.6	max pitch and increased plate thickness +0.008
1.11680	0.00080	1.11840	-0.00291	-3.6	max pitch/min plate thickness and decreased fuel meat thick. (0.029 cm)
1.12154	0.00080	1.12314	0.00183	2.3	max pitch/min plate thickness and increased fuel meat thick. (0.061 cm)
1.12346	0.00081	1.12508	0.00377	4.7	max pitch/min plate thickness and increased fuel meat thick. (0.077 cm)
1.13520	0.00080	1.13680	0.01549	19.4	max pitch/min plate thickness and increased fuel meat thick. (0.145 cm)

Table 6.4.3-17 Reactivity of Various Parameter Variations for 18-Plate McMaster Element

k_{eff}	σ	$k_{eff}+2\sigma$	Δk_{eff}	$\Delta k_{eff}/\sigma$	Description
1.17730	0.00111	1.17952	-	-	nominal fuel (0.127 cm plate, 0.051 cm meat, 0.8103 cm pitch)
1.17068	0.00117	1.17302	-0.00650	-5.6	decreased pitch -0.010 cm
1.17810	0.00112	1.18034	0.00082	0.7	increased pitch +0.010 cm
1.17956	0.00119	1.18194	0.00160	1.3	max pitch and decreased plate thickness -0.008
1.17753	0.00117	1.17987	-0.00047	-0.4	max pitch and increased plate thickness +0.008
1.17646	0.00114	1.17874	-0.00160	-1.4	max pitch/min plate thickness and decreased fuel meat thick. (0.029 cm)
1.18002	0.00117	1.18236	0.00202	1.7	max pitch/min plate thickness and increased fuel meat thick. (0.061 cm)
1.19393	0.00116	1.19625	0.01591	13.7	max pitch/min plate thickness and increased fuel meat thick. (0.119 cm)
1.15124	0.00122	1.15368	-0.02584	-21.2	nominal case at minimum active fuel width (5.92 cm)

Table 6.4.3-18 MTR Limiting Fuel Configurations

Parameter	HEU/MEU	LEU
Min. side plate thickness (cm)	0.45	0.475
Min. side plate length (cm)	7.6	7.62
Min. plate thickness (cm)	0.122	0.127
Min. clad thickness (cm)	0.024	0.033
Maximum number of fuel plates	23	21
U^{235} content per plate (g)	19.5	21
Enrichment (wt % ^{235}U)	94	20
Max. Active Width (cm)	6.54(1)	6.0
Max. Active Fuel Height (cm)	62.5	60.0
Max. Uranium Wt %	50(2)	74

Notes:
1. A 7.3 cm active fuel width is modeled for reduced fissile material mass (^{235}U) and/or a reduced number of fuel plates.
2. Based on MEU fuel.

Table 6.4.3-19 Initial Fuel Configurations for MTR Bounding Evaluations

Variable	Value
Min. side plate thickness (cm)	0.40
Min. side plate length (cm)	7.5
Min. plate thickness (cm)	0.115
Min. clad thickness (cm)	0.020
Maximum number of fuel plates	23
U^{235} content per plate (g)	21
Enrichment (wt % ^{235}U)	94
Max. Active Width (cm)	6.6
Max. Active Fuel Height (cm)	65
Max. Uranium Wt %	50
Element/Plate Material Above/Below Active Fuel (cm)	0.7

Table 6.4.3-20 Reactivity Impact of Parameter Variations in the Finite Cask Model

Set	Number of Plates	^{235}U per Plate (g)	U wt%	^{235}U wt%	Fuel Width (cm)	Fuel Height (cm)	Additional Description of File Parameters	k_{eff}	σ	$k_{eff}+2\sigma$	k_s	Δk	$\Delta k_{eff}/\sigma$
A	23	20	50%	94%	6.6	65.0	Plates at bottom	0.91822	0.00093	0.92008	0.93818	-0.01358	-14.6
	23	20	50%	94%	6.6	65.0	Axial shift to cask center	0.92549	0.00094	0.92737	0.94547	-0.00631	-6.7
	23	20	50%	94%	6.6	65.0	Axial shift alternating	0.93180	0.00091	0.93362	0.95172	--	--
B	23	20	50%	94%	6.6	56.0	Alternating shift (a.s.)	0.94724	0.00091	0.94906	0.96716	0.01544	17.0
	23	20	50%	94%	6.6	60.0	Alternating shift	0.94157	0.00092	0.94341	0.96151	0.00977	10.6
	23	20	50%	94%	6.6	71.752	Alternating shift	0.93015	0.00092	0.93199	0.95009	-0.00165	-1.8
C	23	30	50%	94%	6.6	56.0	Alternating shift	1.01772	0.00097	1.01966	1.03776	0.09128	94.1
	23	19	50%	94%	6.6	56.0	Alternating shift	0.93739	0.00091	0.93921	0.95731	0.01095	12.0
	23	18	50%	94%	6.6	56.0	Alternating shift	0.92644	0.00093	0.92830	0.94640	--	--
	23	17	50%	94%	6.6	56.0	Alternating shift	0.91468	0.00099	0.91666	0.93476	-0.01176	-11.9
	23	18	50%	50%	6.6	56.0	a.s.; MEU Core	0.90732	0.00092	0.90916	0.92726	-0.01912	-20.8
D	21	18	50%	94%	6.6	56.0	Alternating shift	0.91806	0.00092	0.91990	0.93800	-0.00838	-9.1
	19	18	50%	94%	6.6	56.0	Alternating shift	0.90657	0.00097	0.90851	0.92661	-0.01987	-20.5
E	23	18	75%	94%	6.6	56.0	Alternating shift	0.92567	0.00091	0.92749	0.94559	-0.00077	-0.8
	23	18	30%	94%	6.6	56.0	Alternating shift	0.92753	0.00097	0.92947	0.94757	0.00109	1.1
	23	18	50%	94%	6.6	56.0	a.s.; pitch -0.02 cm	0.91104	0.00096	0.91296	0.93106	-0.01540	-16.0
	23	18	50%	94%	6.6	56.0	a.s.; pitch -0.04 cm	0.89691	0.00095	0.89881	0.91691	-0.02953	-31.1
	23	18	50%	94%	6.6	56.0	a.s.; side plate lateral shift	0.92711	0.00094	0.92899	0.94709	0.00067	0.7
	23	18	50%	94%	6.6	56.0	a.s.; side plates 0.5 cm	0.92357	0.00093	0.92543	0.94353	-0.00287	-3.1
	23	18	50%	94%	6.6	56.0	a.s.; side plates 0.3 cm	0.92975	0.00093	0.93161	0.94971	0.00331	3.6
	23	18	50%	94%	6.6	56.0	a.s.; canister plates added	0.89768	0.00193	0.90154	0.91964	-0.02876	-14.9
	23	18	50%	94%	6.6	56.0	a.s.; clad width +1cm	0.92573	0.00097	0.92767	0.94577	-0.00071	-0.7
	23	18	50%	94%	6.6	56.0	a.s.; clad length +4cm	0.91304	0.00094	0.91492	0.93302	-0.01340	-14.3
	23	18	50%	94%	6.6	56.0	a.s.; plate 0.125, clad 0.025	0.91525	0.00094	0.91713	0.93523	-0.01119	-11.9
	23	18	50%	94%	6.6	56.0	a.s.; plate 0.115, clad 0.020	0.91405	0.00094	0.91593	0.93403	-0.01239	-13.2
F	19	20	50%	94%	6.6	56.0	Alternating shift	0.92822	0.00096	0.93014	0.94824	--	--
G	23	18	50%	94%	7.3	56.0	Alternating shift	0.94448	0.00090	0.94628	0.96438	--	--
	23	17	50%	94%	7.3	56.0	Alternating shift	0.93237	0.00092	0.93421	0.95231	--	--
	23	16.5	50%	94%	7.3	56.0	Alternating shift	0.92550	0.00094	0.92738	0.94548	--	--
H	23	22	75%	25%	7.3	56.0	Alternating shift; LEU Core	0.94090	0.00091	0.94272	0.96082	--	--
	23	22	75%	25%	6.6	56.0	Alternating shift; LEU Core	0.91993	0.00092	0.92177	0.93987	--	--
I	34	11	50%	94%	6.6	26.0	Alternating shift	0.87068	0.00094	0.87256	0.89066	--	--
	34	11	50%	94%	6.6	30.0	Alternating shift	0.87146	0.00095	0.87336	0.89146	--	--
	17	22	50%	94%	6.6	26.0	Fuel split by 2 cm spacer	0.92616	0.00091	0.92798	0.94608	--	--

Table 6.4.3-21 Baseline MTR Bounding Configurations

Parameter[1]	Generic	NISTR[2]
Plate thickness	≥ 0.115 cm	≥ 0.115 cm
Clad thickness	≥ 0.02 cm	≥ 0.02 cm
Number of fuel plates	≤ 23[3]	≤ 17
^{235}U content per plate	≤ 18 g[3,4,5]	≤ 22 g
Enrichment wt % ^{235}U	≤ 94[4]	≤ 94
Active width	≤ 6.6 cm[5]	≤ 6.6 cm
Active fuel height	≥ 56 cm	≥ 54 cm
Maximum reactivity (k_s)	0.9482	0.9461

Notes:
1. Loose fuel plates meeting the requirements in this table must be loaded into a MTR plate canister.
2. Fuel plates may be cut in half with each half limited to 11g ^{235}U and an active fuel length between 27 and 30 cm.
3. At a 19 fuel plate maximum, the plates are limited to 20g ^{235}U per plate.
4. LEU fuel plate with up to 22g ^{235}U may be loaded at a maximum enrichment of 25 wt % ^{235}U.
5. At a maximum active fuel width of 7.3 cm, the plates are limited to 16.5g ^{235}U.

Table 6.4.3-22 High Fissile Mass MTR Fuel – Bounding Parameter Analysis

Parameter	Variation From Baseline (Generic) MTR		
	Increased Plate Thickness and Fissile Mass [1]	Increased Plate Thickness and Fissile Mass and Decreased Number of Plates	Increased Fissile Mass and Decreased Number of Plates
Plate thickness [cm]	≥ 0.123	≥ 0.200	≥ 0.115
Clad thickness [cm]	≥ 0.02	≥ 0.02	≥ 0.02
Number of fuel plates	≤ 23	≤ 19	≤ 17
^{235}U content per plate [g]	≤ 20	≤ 21	≤ 21
Enrichment [wt % ^{235}U]	≤ 94	≤ 94	≤ 94
Active Width [cm]	≤ 6.6	≤ 6.6	≤ 6.6
Active Fuel Height [cm]	≥ 56	≥ 56	≥ 56
Maximum reactivity (k_s)	0.9488	0.8753	0.9451

1.) Requires a minimum 4 cm of fuel element hardware (or spacer material) separating the fuel segments axially.

Table 6.4.3-23 MTR High Fissile Content Loading Evaluation (460 g ^{235}U)

Number of Plates	^{235}U per Plate (g)	Fuel Width (cm)	Fuel Height (cm)	Plate Thickness (cm)	Offset (cm)	k_{eff}	σ	$k_{eff}+2\sigma$	k_s	Δk
23	20.0	6.6	56.0	0.115	0.7	0.94724	0.00091	0.94906	0.96716	--
23	20.0	6.6	56.0	0.115	1.7	0.94161	0.00093	0.94347	0.96157	-0.00563
23	20.0	6.6	56.0	0.115	2.0	0.93810	0.00094	0.93998	0.95808	-0.00914
23	20.0	6.6	56.0	0.115	3.0	0.93339	0.00112	0.93563	0.95373	-0.01385
23	20.0	6.6	56.0	0.115	4.0	0.92770	0.00107	0.92984	0.94794	-0.01954
23	20.0	6.6	56.0	0.123	0.7	0.93729	0.00095	0.93919	0.95729	-0.00995
23	20.0	6.6	56.0	0.123	1.7	0.93036	0.00093	0.93222	0.95032	-0.01688
23	20.0	6.6	56.0	0.123	2.0	0.92883	0.00093	0.93069	0.94879	-0.01841
19	21.0	6.6	56.0	0.200	0.7	0.85540	0.0093	0.85726	0.87526	--
17	21.0	6.6	56.0	0.115	0.7	0.92509	0.0095	0.92699	0.94509	--

Table 6.4.3-24 LEU MTR Active Fuel Width Increase Evaluation

Number of Plates	^{235}U per Plate (g)	U wt%	^{235}U wt%	Fuel Width (cm)	Fuel Height (cm)	Plate Thickness (cm)	k_{eff}	σ	$k_{eff}+2\sigma$	k_s
23	22.0	75%	25%	6.6	56.0	0.115	0.91993	0.00092	0.92177	0.93987
23	22.0	75%	25%	7.0	56.0	0.115	0.93387	0.00093	0.93573	0.95383
23	22.0	75%	25%	7.0	56.0	0.119	0.92717	0.00090	0.92897	0.94707
23	21.5	75%	25%	7.0	56.0	0.115	0.92915	0.00087	0.93089	0.94899
23	22.0	75%	25%	7.0	63.0	0.115	0.92154	0.00087	0.92328	0.94138
17	22.0	75%	25%	7.1	56.0	0.115	0.90885	0.00093	0.91071	0.92881
23	22.0	75%	25%	7.1	56.0	0.200	0.81898	0.00089	0.82076	0.83886
23	22.0	75%	25%	7.15	56.0	0.119	0.93169	0.00086	0.93341	0.95151
22	22.0	75%	25%	7.15	56.0	0.119	0.92981	0.00092	0.93165	0.94975
23	21.5	75%	25%	7.15	56.0	0.119	0.92662	0.00090	0.92842	0.94652
23	22.0	75%	25%	7.15	61.0	0.119	0.92512	0.00091	0.92694	0.94504

Table 6.4.3-25 Summary of LEU MTR Bounding Configurations

Parameter	LEU Baseline	7.0 cm Active Width			7.1 cm Active Width		7.15 cm Active Width		
		Plate Thickness	^{235}U Content	Active Length	Plate Thickness	Number of Plates	Number of Plates	^{235}U Content	Active Length
Plate thickness [cm]	≥ 0.115	≥ 0.119	≥ 0.115	≥ 0.115	≥ 0.200	≥ 0.115	≥ 0.119	≥ 0.119	≥ 0.119
Clad thickness [cm]	≥ 0.02	≥ 0.02	≥ 0.02	≥ 0.02	≥ 0.02	≥ 0.02	≥ 0.02	≥ 0.02	≥ 0.02
Number of fuel plates	≤ 23	≤ 23	≤ 23	≤ 23	≤ 23	≤ 17	≤ 22	≤ 23	≤ 23
^{235}U content per plate [g]	≤ 22	≤ 22	≤ 21.5	≤ 22	≤ 22	≤ 22	≤ 22	≤ 21.5	≤ 22
Enrichment [wt % ^{235}U]	≤ 25	≤ 25	≤ 25	≤ 25	≤ 25	≤ 25	≤ 25	≤ 25	≤ 25
Active Width [cm]	≤ 6.6	≤ 7.0	≤ 7.0	≤ 7.0	≤ 7.1	≤ 7.1	≤ 7.15	≤ 7.15	≤ 7.15
Active Fuel Height [cm]	≥ 56	≥ 56	≥ 56	≥ 63	≥ 56	≥ 56	≥ 56	≥ 56	≥ 61
Maximum reactivity (k_s)	0.93987	0.94707	0.94899	0.94138	0.83886	0.92881	0.94975	0.94652	0.94504

Table 6.4.3-26 Summary of Previous Bounding Configurations for Use in High Mass LEU Calculations

Fuel ID	Plate thickness [cm]	Clad thickness [cm]	Number of fuel plates	^{235}U per plate [g]	Enrichment [wt % ^{235}U]	Active Width [cm]	Active Height [cm]	Fuel Offset [cm]
25%-A	0.115	0.02	23	22	25	6.6	56	0.7
25%-B	0.119	0.02	23	22	25	7	56	0.7
25%-C	0.115	0.02	23	21.5	25	7	56	0.7
25%-D	0.115	0.02	23	22	25	7	63	0.7
25%-E	0.2	0.02	23	22	25	7.1	56	0.7
25%-F	0.115	0.02	17	22	25	7.1	56	0.7
25%-G	0.119	0.02	22	22	25	7.15	56	0.7
25%-H	0.119	0.02	23	21.5	25	7.15	56	0.7
25%-I	0.119	0.02	23	22	25	7.15	61	0.7
25%-J[1]	0.115	0.02	23	32	25	7.3	56	0.7
94%-A	0.115	0.02	23	18	94	6.6	56	0.7
94%-B	0.115	0.02	19	20	94	6.6	56	0.7
94%-C	0.115	0.02	23	16.5	94	7.3	56	0.7
94%-D	0.123	0.02	23	20	94	6.6	56	2.0
94%-E	0.2	0.02	19	21	94	6.6	56	0.7
94%-F	0.115	0.02	17	21	94	6.6	56	0.7

Note: All configurations previously evaluated as bounding are included with the exception of NISTR fuel plates. The split plate design adds an additional model complexity not required in the evaluations. The LEU high fissile mass analysis scope is designed to demonstrate that the addition of a partially loaded basket to the previous payloads is bounded by the maximum reactivities already documented. Conclusions drawn from the remaining payloads are applicable to the NISTR fuel.

[1] Content added in Section 6.4.3.14.

Table 6.4.3-27 High Fissile Mass LEU (32 gram ^{235}U per Plate) Analysis Results

Fuel ID[1]	Same Fuel All Baskets				32g ^{235}U PBL[2] - 7.3 cm Width		
	Full Load		Partial Top/Bottom			Full Load	Partial Load
	k_{eff}	Dancoff Factor	k_{eff}	Δk	k_{eff}	Δk	Δk
25%-A	0.92134	0.50241715	0.91073	-0.011	0.91254	-0.009	0.002
25%-B	0.92813	0.50706971	0.91656	-0.012	0.91521	-0.013	-0.001
25%-C	0.92913	0.50241715	0.91915	-0.010	0.91769	-0.011	-0.001
25%-D	0.92391	0.50241715	0.91091	-0.013	0.91053	-0.013	0.000
25%-E	0.81720	0.61588436	0.80189	-0.015	0.80451	-0.013	0.003
25%-F	0.91075	0.36430386	0.89951	-0.011	0.89608	-0.015	-0.003
25%-G	0.92995	0.48636374	0.91938	-0.011	0.91798	-0.012	-0.001
25%-H	0.92940	0.50706971	0.91356	-0.016	0.91640	-0.013	0.003
25%-I	0.92533	0.50706971	0.90939	-0.016	0.91298	-0.012	0.004
25%-J[3]	0.99842	0.50241715	0.98432	-0.014	--	--	--
94%-A	0.92885	0.50241715	0.91645	-0.012	0.91873	-0.010	0.002
94%-B	0.92823	0.41448367	0.91949	-0.009	0.91825	-0.010	-0.001
94%-C	0.92533	0.50241715	0.91439	-0.011	0.91572	-0.010	0.001
94%-D	0.93162	0.51188898	0.91978	-0.012	0.92071	-0.011	0.001
94%-E	0.85605	0.50536168	0.84241	-0.014	0.84414	-0.012	0.002
94%-F	0.92381	0.36430386	0.91394	-0.010	0.91466	-0.009	0.001

Notes:

(1) Fuel ID is the identifier for the fuel material contained in all baskets for the cases containing one fuel type, and for the fuel material in the middle baskets for cases containing two fuel types.

(2) Partial basket loading (PBL) in the top and bottom baskets. Partially loaded baskets contain four 32 g ^{235}U per plate LEU elements per basket loaded in locations 4, 5, 6 and 7 per Figure 6.3.3-5.

(3) LEU fuel material of 32 g ^{235}U per plate, up to 23 plates.

Table 6.4.3-28 LEU High Fissile Mass Bounding Configuration

Parameter	Value
Number of Elements per Basket	4
Plate thickness [cm]	≥ 0.115
Clad thickness [cm]	≥ 0.02
Number of fuel plates	≤ 23
^{235}U content per plate [g]	≤ 32
Enrichment [wt % ^{235}U]	≤ 25
Active Width [cm]	≤ 7.3
Active Fuel Height [cm]	≥ 56

6.4.4 PWR and BWR Rods in a Rod Holder or Fuel Assembly Lattice

The NAC-LWT cask may transport up to 25 intact PWR or BWR fuel rods that are in a fuel rod holder or fuel assembly lattice. Up to 14 of 25 PWR or BWR fuel rods in a fuel rod holder may be classified as damaged.

6.4.4.1 Intact PWR and BWR Rods in a Rod Holder or Fuel Assembly Lattice

This section presents the criticality analysis for the NAC-LWT with up to 25 PWR or 25 BWR fuel rods of up to 5.0 w/o ^{235}U initial enrichment. No credit is taken for geometry control that is provided by the rod holder and no rod positions are specified for the rods in the lattice. Since various fuel rod arrangements may be shipped, the criticality of the PWR and BWR rods in the NAC-LWT cask cavity is studied to determine the optimum pitch and, therefore, the maximum k_{eff} for the cask. Both PWR and BWR studies evaluate rods unrestrained in the cavity. No credit is taken for any basket structure.

Cask k_{eff} versus rod fuel rod pitch is shown in Table 6.4.4-1 for the PWR analysis and Table 6.4.4-5 for the BWR study. The rod pitch, which corresponds to center-to-center spacing in a triangular and most reactive lattice formation, is varied from 1.128 cm to 5.997 cm. The limits 1.1278 cm and 5.997 cm correspond to the most compact and the most dispersed PWR rod formations in a triangular pitch, respectively. Due to the larger rod diameter, the BWR range is from 1.640 cm to 5.228 cm. These evaluations are based on an infinite array of casks with water at 1 gm/cc between the fuel rods and in the basket cavity. The neutron shield and cask exterior do not contain water and the results are reported for wet and dry clad gap configurations. Table 6.4.4-1 and Table 6.4.4-5 show that a broad peak in k_{eff} occurs in the rod pitch range from 2.5 to 3.5 cm for the PWR rods and 3.0 to 4.0 for the BWR rods, and that there is no statistically significant difference between wet gap and dry gap reactivities. Therefore, the most reactive configuration is chosen for the PWR rod system with a wet gap and a pitch of 2.922 cm and $k_{eff} = 0.6082 \pm 0.0035$. The BWR rod most reactive configuration occurs at a pitch of 3.691 cm and a dry gap $k_{eff} = 0.7045 \pm 0.0033$. These pitches will be used in the subsequent moderator studies.

25 PWR or BWR Rods Moderator Density Criticality Evaluations for Normal Conditions

With the fuel rods at optimum pitch (2.922 cm, PWR, or 3.691 cm, BWR), Table 6.4.4-2 and Table 6.4.4-6 present the cask k_{eff} as a function of moderator density inside and outside the cask.

An infinite array of casks on a square pitch is modeled at three cask pitches: touching (99.7 cm), 2-foot surface-to-surface (160.7 cm), and ISO-container spacing (242.84 cm). The water moderator density is varied from 1.0 gm/cc to 0.0 gm/cc, and for normal conditions it is assumed that the clad gap is dry and the neutron shield is filled with water. The results show an increase in reactivity with increasing internal moderator density. This indicates that moderator density changes due to increasing temperature have a negative reactivity effect. Low density moderation inside or outside of the cask does not produce abrupt increases in reactivity in comparison to other density values. There is no optimum at low density as expected from an undermoderated system. The calculations show that cask pitch has no significant impact on the reactivity of the cask array under normal conditions and that k_{eff} does not vary significantly when varying external moderator with constant full density internal moderator. For the PWR cases, the external moderator does not affect reactivity within statistical limits, and the most reactive case is chosen with both internal and external moderator density at 1.0 gm/cc. The k_{eff} in this case is 0.6070 ± 0.0033. Similarly, the most reactive BWR case is for a fully moderated interior, but a dry exterior, resulting in a k_{eff} of 0.7045 ± 0.0038. The external moderator does not affect reactivity since the fully moderated exterior case produces a slightly lower k_{eff} that is within statistics. For both the PWR and BWR analysis, the k_{eff} for the normal condition cask array with a dry cavity is very subcritical, i.e. ~ <0.1 and is insensitive to external moderator density variations.

Thus, up to 25 PWR or BWR rods with 5.0 w/o ^{235}U initial enrichment are acceptable in the NAC-LWT cask. An infinite array of casks with optimum interspersed moderation has been analyzed and the NAC-LWT cask with up to 25 PWR or BWR fuel rod of up to 5.0 w/o ^{235}U remains subcritical in all of the normal transport and accident conditions.

25 PWR or BWR Rods Moderator Density Criticality Evaluations for Accident Conditions

With the fuel rods at optimum pitch, Table 6.4.4-3 (PWR) and Table 6.4.4-7 (BWR) show the cask k_{eff} for the most reactive accident condition configuration as a function of moderator density variation in the cavity, neutron shield tank and outside the cask. Again, three cask spacings are presented: touching (99.7 cm), 2-foot surface-to-surface (160.7 cm), and the ISO-container spacing (242.84 cm). Moderator density is varied from 1.0 gm/cc to 0.0 gm/cc. For accident conditions it is assumed that the clad gap contains full density water and that the neutron shield tank is punctured and the moderator density in the tank is the same as the exterior moderator density. Again, the results show an increase in reactivity with increasing internal moderator density. Low density moderation inside or outside of the cask does not produce abrupt increases in reactivity in comparison to other density values. For both the PWR and BWR analyses, the calculations show that cask pitch does affect reactivity and that the k_{eff} for the accident condition cask array with a dry cavity, neutron shield and exterior is very subcritical, i.e. is less than 0.20. Reactivity is dominated by full density internal moderator. All other variations do not affect

reactivity significantly. Therefore, the most reactive PWR case is chosen with casks touching and the moderator density at 1.0 gm/cc in the cavity and at 0.0 gm/cc in the neutron shield tank as well as exterior. The k_{eff} in this case is 0.6077 ± 0.0030. Likewise, the most reactive BWR case is chosen with casks that are 242.82 cm apart (ISO case) and the moderator density at 1.0 gm/cc in the cavity and at 0.0 gm/cc in the neutron shield tank as well as exterior. The k_{eff} in this case is 0.7135 ± 0.0033.

Single Package Criticality Evaluation

To satisfy 10 CFR 71.55(b)(3), an analysis of the reflection of the containment system (inner shell) by water is performed on a single wet cask. Successive replacement of the cask radial shields with water reflection is also evaluated. The reactivity of the PWR system does not vary with statistical significance as each radial shield of the cask is replaced by water, from a k_{eff} = 0.6008 ± 0.0034 (k_s = 0.6215) for the full cask surrounded by water, to a k_{eff} = 0.6001 ± 0.0030 (k_s = 0.6200) for the inner shell surrounded by water. BWR results are k_{eff}s of 0.6932 and 0.6943 for a full cask reflected and the inner shell water reflected, respectively. The results from this evaluation can be seen in Table 6.4.4-4 (PWR) and Table 6.4.4-8 (BWR).

Conclusion

A calculation of k_s under normal and accident conditions can now be made based on the previous results and based on the KENO-Va validation statistics presented in Section 6.5.1 for low enriched uranium fuel. The value k_s is calculated based on the KENO-Va Monte Carlo average plus any biases and uncertainties associated with the methods and the modeling, i.e.:

$$k_s = k_{eff} + 2\sigma_{mc} + \Delta k_{Bias} + \Delta k_{BU}$$

In the validation presented in Section 6.5.1, a bias of 0.0052 (allowance for under prediction of k_{eff}) and a 95/95 method uncertainty of ± 0.0087 was determined. With this bias and uncertainty, the equation for k_s becomes:

$$k_s = k_{eff} + 2\sigma_{mc} + 0.0052 + 0.0087$$

Thus, k_s = 0.6275 under normal conditions for an infinite array of NAC-LWT casks loaded with 25 PWR design basis fuel rods and a flooded basket cavity and exterior. This is below the 0.95 regulatory limit. Under accident conditions, k_s = 0.6276 for an infinite array of NAC-LWT casks loaded with 25 PWR design basis fuel rods and with a flooded basket cavity and dry neutron shield and exterior.

Under normal conditions, k_s = 0.7251 for an infinite array of NAC-LWT casks loaded with 25 BWR design basis fuel rods and a flooded basket cavity and a dry exterior. This is below the 0.95 regulatory limit. Under accident conditions, k_s = 0.7340 for an infinite array of NAC-LWT casks loaded with 25 BWR design basis fuel rods and with a flooded basket cavity and dry neutron shield and exterior.

For both normal and accident conditions, the calculated k_{eff} values, after correction for biases and uncertainties, are below the 0.95 limit. The analyses demonstrate that, including all calculational and mechanical uncertainties, an infinite array of NAC-LWT casks with 25 PWR or BWR fuel rods remains subcritical under normal and accident conditions.

For both normal and accident conditions, the calculated k_{eff} values, after correction for biases and uncertainties, are below the 0.95 limit. The analyses demonstrate that, including all calculational and mechanical uncertainties, an infinite array of NAC-LWT casks with 25 PWR fuel remains subcritical under normal and accident conditions.

6.4.4.2 Damaged PWR and BWR Rods in a Rod Holder

This section presents the criticality analysis for the NAC-LWT with 25 PWR or BWR fuel rods of up to 5.0 w/o ^{235}U initial enrichment classified as damaged. Although the contents is limited to 14 damaged fuel rods in a 25-rod shipment, the analysis conservatively considers all 25 rods as failing during transport. No credit is taken for any parasitic absorption in the basket, fuel can or rod holder structure. Credit is taken for the rod holder weldment to contain the fissile material during water-fuel mixture studies. Criticality analyses are performed to satisfy the criticality safety requirements of 10 CFR Parts 71.55 and 71.59, as well as IAEA Transportation Safety Standards (TS-R-1). A single cask evaluation is also performed to comply with 10CFR71.55(b)(3). The analyses demonstrate that, including all calculational and mechanical uncertainties, the NAC-LWT is subcritical during normal and accident conditions with up to 25 damaged PWR or BWR rods.

Damaged Fuel Rod Evaluation – Heterogeneous (Rod) Configurations

Damaged fuel rods are evaluated in heterogeneous configurations by analyzing unclad fuel rods in a triangular pitch. Removing the cladding conservatively removes any potential parasitic absorbers while increasing the available volume for water moderator. Three rod arrays are considered: 25 rods, 37 rods, and 61 rods. The latter two arrays are complete hexagonal arrays. The limiting pitch is determined for each PWR and BWR array. The fuel region cross-sectional area is conserved in each of the configurations. The fuel rod radii for the various arrays are summarized in Table 6.4.4-19.

Water Exterior Evaluations

As shown in Tables 6.4.4-9 through 6.4.4-14 and Figures 6.4.4-1 and 6.4.4-2, the system reactivity increases as the number of rods is increased. As the number of rods increases, so does the cross-sectional area occupied by the rod array. Since the canister provides a limited cross-sectional area for the rod array, evaluations for arrays larger than 61 rods are not required.

Based on the can outer width of 5.5 inches (13.97 cm), the can cross-sectional area is 195.16 cm^2. Using the rod radius, rod pitch, and number of rods, the area of an enclosing hexagon is calculated for each of the three PWR and BWR arrays, shown in Table 6.4.4-19. This area is compared to the can area. For both BWR and PWR fuel, the 37-rod array results in an enclosing area that is larger than the can. A further increase in the cross-sectional lattice area, required for maximum reactivity, is seen in the 61-rod array. Therefore, the use of a 61-rod array is bounding for the NAC-LWT with no larger arrays requiring analysis.

Void Exterior/Preferential Flooding Evaluations

To increase the coupling of adjacent casks in the infinite array, system reactivity is evaluated for two additional scenarios: void exterior with fully flooded cask cavity and void exterior with preferentially flooded cask cavity. Preferential flooding removes the cask interior moderator outside the fuel rod lattice providing for increased neutronic interaction between casks in the infinite array. The 61-rod hexagonal array is employed.

As shown in Tables 6.4.4-15 and 6.4.4-16, the void exterior, completely flooded cask cavity, scenario produced slightly higher reactivities than the scenario containing a water cask exterior. This is the result of increased neutronic interaction between casks and indicates the need for preferential flooding evaluations.

The preferential flooding model encloses the 61-rod array in a fully flooded cylinder with the remaining cask cavity filled with the exterior moderator material. This allows the array to

remain flooded while voiding from the remaining cask cavity space, the neutron shield and cask exterior. A range of rod pitches is evaluated for both BWR and PWR fuel to determine the maximum reactivity pitch in this configuration. Given the increased neutronic interaction between casks, the most reactive rod pitch of the previously evaluated isolated cask changes. A check is also made to determine whether the modeled array remains conservative with respect to the envelope of the rod holder.

As shown in Tables 6.4.4-17 and 6.4.4-18, system reactivity is much higher given the preferential flooding scenario. As shown in Table 6.4.4-20, the 61-rod array remains conservative for BWR fuel under the preferential flooding scenario. A 61-rod array of PWR fuel at its most reactive pitch produces a cross sectional area slightly smaller than that produced by the rod holder exterior (186.9 cm^2 versus 195.2 cm^2 calculated for the canister). However, the area calculation takes no credit for the rod holder wall material and fuel rod tube insert, which reduce the available cross-sectional area significantly. A larger array of PWR fuel rods (with reduced diameter) is, therefore, not investigated.

Single Cask Evaluation

10CFR71.55(b)(3) requires an evaluation of the NAC-LWT with the containment system fully reflected by water. The containment for the NAC-LWT is the cask inner shell. While no operating condition results in a removal of the cask outer shell and lead gamma shield, the most reactive preferential flooding case for BWR fuel is reevaluated by removing the lead and outer shells (including neutron shield), and reflecting the system by water at full density on the X and Y faces (the Z boundary condition remains mirrored). The results of this analysis, a k_s = 0.60117, demonstrates that the system reactivity of the single cask, with containment fully reflected, is significantly below regulatory limits.

Homogenized Fuel/Water Evaluation

A homogenized mixture of UO_2 and water is analyzed in a finite axial model with an infinite array of casks. The width chosen for the fuel homogenization, 13.97 cm, is conservative in that the fuel material must be enclosed by the inner dimension of the rod holder.

Given the maximum fuel volume for 25 BWR fuel rods, 11588 cm^3, and a UO_2 volume fraction, the height of the homogenized mixture of UO_2 and water is calculated. For a UO_2 volume fraction of 0.16, the cross-sectional area of UO_2 is 31.23 cm^2 (195.16 cm^2 × 0.16) and the resultant axial extent is 371.11 cm. The fuel mixture is modeled at the top of the cask cavity.

The limiting UO_2 volume fraction is calculated using a void cask cavity (i.e., preferential flooding), cask exterior and neutron shield to maximize neutron interaction in the cask array. As

shown in Table 6.4.4-21 and Figure 6.4.4-3, the maximum reactivity is calculated with a UO_2 volume fraction of 16%.

Four sets of moderator density studies are performed, as shown in Tables 6.4.4-22 through 6.4.4-25. The studies all serve to demonstrate the maximum reactivity configuration of the voided cask cavity and cask exterior. All cases with a voided cask exterior also have a voided neutron shield; thus, the accident condition of loss of neutron shield is explicitly considered.

Single Cask Evaluation

10CFR71.55(b)(3) requires an evaluation of the NAC-LWT with the containment system fully reflected by water. The containment for the NAC-LWT is the cask inner shell. While no operating condition results in a removal of the cask outer shell and lead gamma shield, each of the partial flooding cases is reevaluated by removing the lead and outer shells (including neutron shield), and reflecting the system by full density water on the X and Y faces. The results of this analysis are shown in Table 6.4.4-26 and demonstrate that the system reactivity decreases with the removal of the lead, outer shell and neutron shield reflectors.

Code Bias and Code Bias Uncertainty Adjustments

A calculation of k_s under normal and accident conditions can now be made based on the results for the heterogeneous rod and the homogenized fuel/water evaluatons. Since the fuel rod (heterogeneous) configuration resulted in a significantly higher k_{eff} than the homogeneous configuration the KENO-Va validation statistics presented in Section 6.5.1 for low enriched uranium fuel are applied. The value k_s is calculated based on the KENO-Va Monte Carlo average plus any biases and uncertainties associated with the methods and the modeling, i.e.:

$$k_s = k_{eff} + 2\sigma_{mc} + \Delta k_{Bias} + \Delta k_{BU}$$

In the validation presented in Section 6.5.1, a bias of 0.0052 (allowance for under prediction of k_{eff}) and a 95/95 method uncertainty of ± 0.0087 were determined. With this bias and uncertainty, the equation for k_s becomes:

$$k_s = k_{eff} + 2\sigma_{mc} + 0.0052 + 0.0087$$

Each of the resulting tables for arrays of damaged fuel rods, Tables 6.4.4-19 through 6.4.4-26, includes the calculated k_s. Mixtures with significantly lower k_{eff} results are not limiting.

Under accident conditions (i.e., dry neutron shield) and preferential flooding, k_s = 0.89950 for an infinite array of NAC-LWT casks loaded with 25 BWR design basis damaged fuel rods. The calculated k_s for PWR fuel rods is 0.77156.

The calculated k_{eff} values, after correction for biases and uncertainties, are below the 0.95 limit. The analyses demonstrate that, including all calculational and mechanical uncertainties, an infinite array of NAC-LWT casks with 25 PWR or BWR damaged fuel rods remains subcritical under normal and accident conditions.

Figure 6.4.4-1 Maximum Reactivity Pitch Determination for Damaged BWR Rod Arrays – Water Exterior

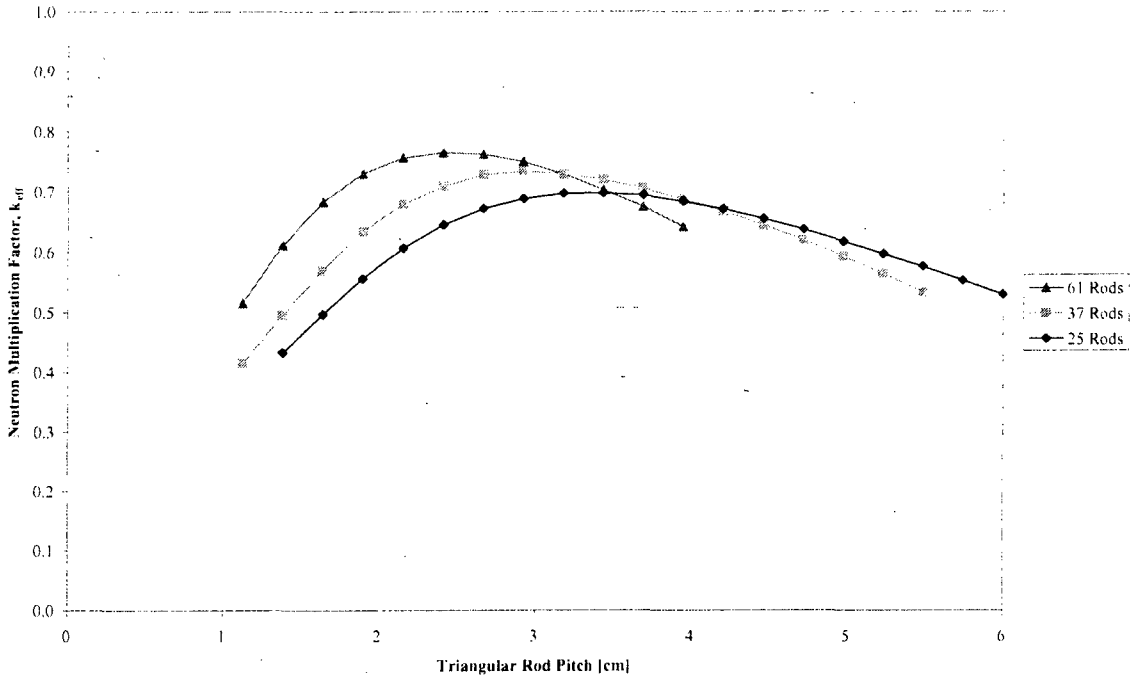

Figure 6.4.4-2 Maximum Reactivity Pitch Determination for Damaged PWR Rod Arrays – Water Exterior

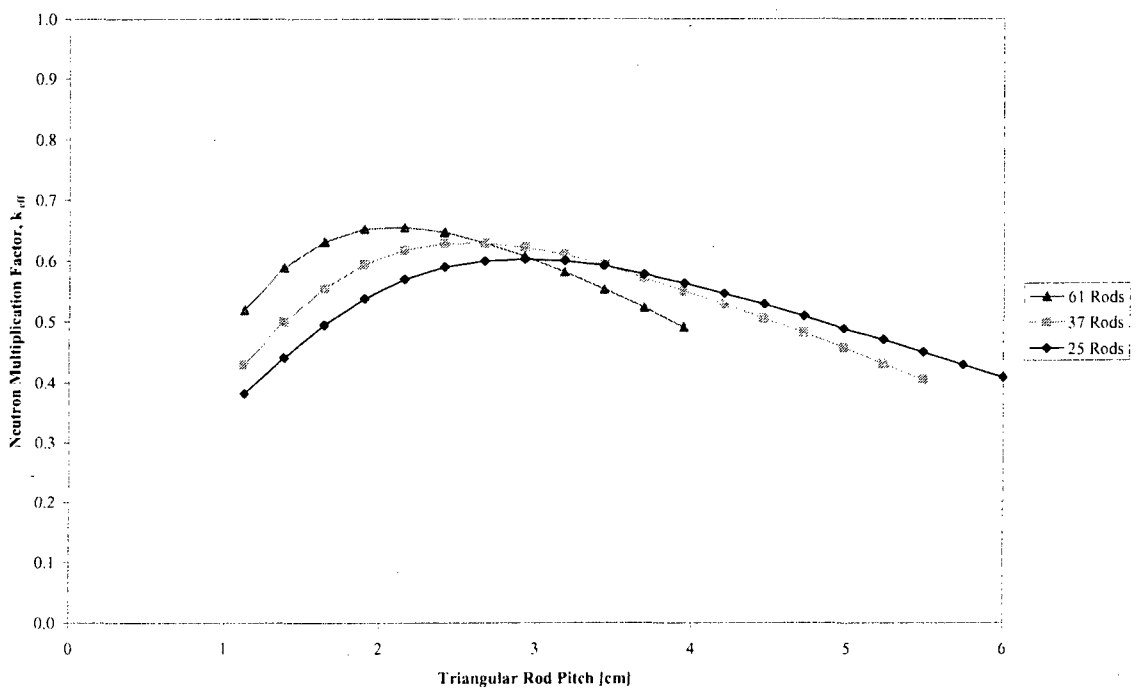

Figure 6.4.4-3 Maximum Reactivity Determination for Homogenized UO_2/Water Mixture

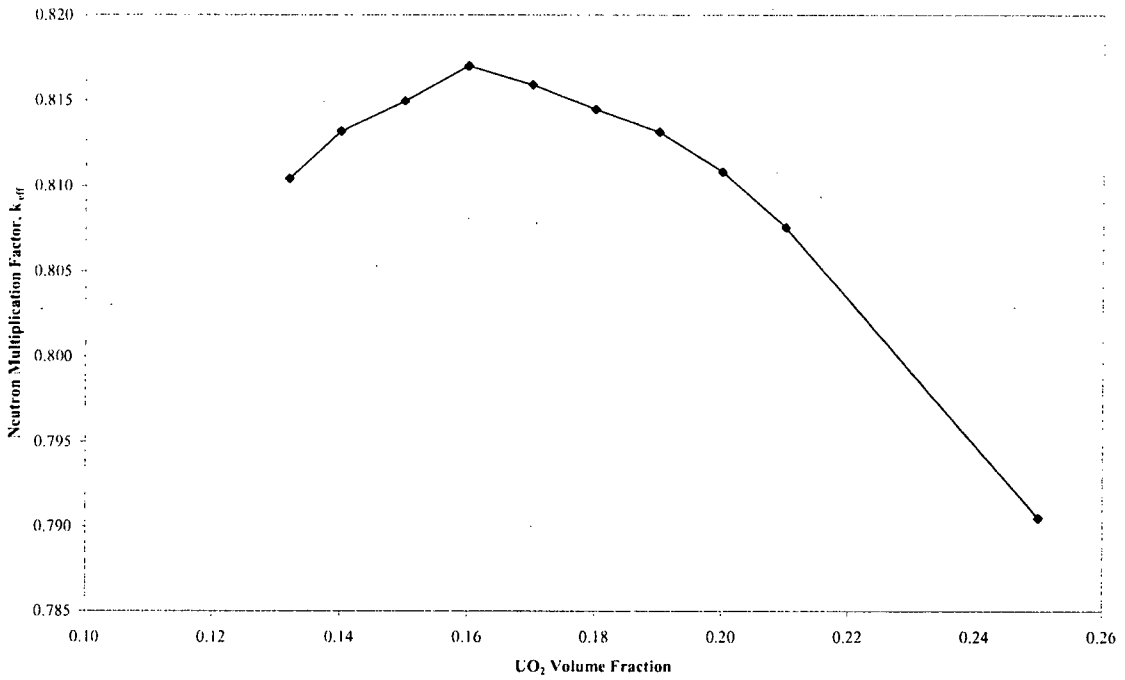

Table 6.4.4-1 NAC-LWT Cask with 25 PWR Rods, k_{eff} versus Fuel Rod Pitch, 5.0 w/o ^{235}U Initial Enrichment

Fuel Rod Pitch (cm)	Cask $k_{eff} \pm \sigma$ Wet Gap	Cask $k_{eff} \pm \sigma$ Dry Gap
1.12769	0.3581 ± 0.0027	0.3577 ± 0.0029
1.38399	0.4150 ± 0.0030	0.4167 ± 0.0033
1.64029	0.4757 ± 0.0032	0.4705 ± 0.0034
1.89659	0.5250 ± 0.0039	0.5268 ± 0.0032
2.15289	0.5578 ± 0.0035	0.5588 ± 0.0035
2.40919	0.5841 ± 0.0034	0.5801 ± 0.0035
2.66539	0.6018 ± 0.0033	0.6030 ± 0.0034
2.92169	0.6082 ± 0.0035	0.6037 ± 0.0035
3.17799	0.6037 ± 0.0034	0.6102 ± 0.0035
3.43429	0.5988 ± 0.0033	0.6002 ± 0.0033
3.69059	0.5838 ± 0.0034	0.5847 ± 0.0035
3.94689	0.5743 ± 0.0036	0.5725 ± 0.0033
4.20319	0.5610 ± 0.0032	0.5582 ± 0.0027
4.45949	0.5415 ± 0.0028	0.5464 ± 0.0036
4.71579	0.5217 ± 0.0027	0.5286 ± 0.0026
4.97209	0.5113 ± 0.0028	0.5109 ± 0.0028
5.22839	0.4858 ± 0.0026	0.4885 ± 0.0032
5.48459	0.4756 ± 0.0026	0.4763 ± 0.0030
5.74089	0.4562 ± 0.0029	0.4564 ± 0.0029
5.99719	0.4402 ± 0.0029	0.4385 ± 0.0028

Table 6.4.4-2 Reactivity with 25 PWR Rods vs. Basket Moderator Density, Normal Conditions, Infinite Array of Casks

Moderator Density	Casks Touching	2 Foot Surf.-to-Surf.	ISO Container 242.84 cm Pitch
Dry Exterior, Vary Internal Density			
0.0000	0.0413 ± 0.0004	0.0410 ± 0.0004	0.0410 ± 0.0005
0.0010	0.0414 ± 0.0005	0.0419 ± 0.0004	0.0421 ± 0.0004
0.0100	0.0483 ± 0.0005	0.0477 ± 0.0006	0.0488 ± 0.0005
0.0250	0.0652 ± 0.0008	0.0664 ± 0.0008	0.0645 ± 0.0008
0.0500	0.1026 ± 0.0014	0.1036 ± 0.0012	0.1051 ± 0.0012
0.0750	0.1429 ± 0.0017	0.1424 ± 0.0016	0.1453 ± 0.0015
0.1000	0.1845 ± 0.0021	0.1828 ± 0.0019	0.1860 ± 0.0022
0.2000	0.3075 ± 0.0029	0.3053 ± 0.0027	0.3070 ± 0.0026
0.4000	0.4296 ± 0.0033	0.4237 ± 0.0034	0.4265 ± 0.0036
0.6000	0.4959 ± 0.0036	0.4988 ± 0.0037	0.4931 ± 0.0030
0.8000	0.5615 ± 0.0035	0.5562 ± 0.0038	0.5560 ± 0.0034
0.9000	0.5823 ± 0.0035	0.5868 ± 0.0033	0.5866 ± 0.0036
1.0000	0.6056 ± 0.0036	0.6002 ± 0.0035	0.6030 ± 0.0030
Wet Interior, Vary External Density			
0.0000	0.5993 ± 0.0031	0.6027 ± 0.0036	0.6035 ± 0.0036
0.0010	0.5976 ± 0.0036	0.6021 ± 0.0034	0.6028 ± 0.0035
0.0100	0.6079 ± 0.0036	0.6052 ± 0.0037	0.6005 ± 0.0035
0.0250	0.6050 ± 0.0036	0.6034 ± 0.0033	0.6027 ± 0.0036
0.0500	0.6003 ± 0.0030	0.6005 ± 0.0034	0.6100 ± 0.0036
0.0750	0.6072 ± 0.0036	0.6009 ± 0.0033	0.5996 ± 0.0035
0.1000	0.6042 ± 0.0036	0.6038 ± 0.0036	0.5995 ± 0.0030
0.2000	0.6032 ± 0.0035	0.6034 ± 0.0035	0.6016 ± 0.0036
0.4000	0.6050 ± 0.0031	0.6032 ± 0.0031	0.5987 ± 0.0034
0.6000	0.6025 ± 0.0032	0.6071 ± 0.0037	0.6003 ± 0.0031
0.8000	0.5975 ± 0.0030	0.6045 ± 0.0034	0.6040 ± 0.0030
0.9000	0.5993 ± 0.0034	0.6033 ± 0.0039	0.6082 ± 0.0037
1.0000	0.6037 ± 0.0037	0.5970 ± 0.0033	0.6036 ± 0.0033
Vary Interior and Exterior Density Simultaneously			
0.0000	0.0407 ± 0.0005	0.0405 ± 0.0004	0.0409 ± 0.0004
0.0010	0.0418 ± 0.0004	0.0411 ± 0.0004	0.0418 ± 0.0005
0.0100	0.0480 ± 0.0005	0.0481 ± 0.0005	0.0488 ± 0.0005
0.0250	0.0669 ± 0.0008	0.0656 ± 0.0008	0.0649 ± 0.0007
0.0500	0.1051 ± 0.0012	0.1002 ± 0.0013	0.1034 ± 0.0012
0.0750	0.1415 ± 0.0016	0.1430 ± 0.0016	0.1464 ± 0.0018
0.1000	0.1850 ± 0.0020	0.1865 ± 0.0022	0.1826 ± 0.0019
0.2000	0.3014 ± 0.0025	0.3043 ± 0.0028	0.3011 ± 0.0027
0.4000	0.4245 ± 0.0030	0.4246 ± 0.0033	0.4193 ± 0.0032
0.6000	0.5022 ± 0.0037	0.4916 ± 0.0036	0.4998 ± 0.0031
0.8000	0.5567 ± 0.0034	0.5551 ± 0.0029	0.5550 ± 0.0034
0.9000	0.5865 ± 0.0035	0.5810 ± 0.0031	0.5725 ± 0.0033
1.0000	0.6070 ± 0.0033	0.6012 ± 0.0032	0.6012 ± 0.0034

Table 6.4.4-3 Reactivity with 25 PWR Rods vs. Basket Moderator Density, Accident Conditions, Infinite Array of Casks

Moderator Specific Gravity	Casks Touching	2 Foot Surface-to-Surface	ISO 242.84 cm Pitch
Dry Exterior, Vary Internal Density			
0.0000	0.1127 ± 0.0008	0.1135 ± 0.0008	0.1125 ± 0.0006
0.0010	0.1158 ± 0.0007	0.1161 ± 0.0007	0.1149 ± 0.0007
0.0100	0.1365 ± 0.0009	0.1377 ± 0.0009	0.1355 ± 0.0009
0.0250	0.1782 ± 0.0013	0.1778 ± 0.0012	0.1761 ± 0.0013
0.0500	0.2438 ± 0.0019	0.2392 ± 0.0018	0.2401 ± 0.0019
0.0750	0.2971 ± 0.0021	0.2974 ± 0.0021	0.2982 ± 0.0022
0.1000	0.3442 ± 0.0028	0.3404 ± 0.0027	0.3392 ± 0.0025
0.2000	0.4417 ± 0.0034	0.4417 ± 0.0030	0.4381 ± 0.0035
0.4000	0.4958 ± 0.0031	0.4941 ± 0.0032	0.4852 ± 0.0036
0.6000	0.5290 ± 0.0033	0.5228 ± 0.0034	0.5297 ± 0.0037
0.8000	0.5701 ± 0.0036	0.5689 ± 0.0034	0.5667 ± 0.0031
0.9000	0.5952 ± 0.0034	0.5842 ± 0.0030	0.5853 ± 0.0034
1.0000	0.6045 ± 0.0033	0.6040 ± 0.0032	0.6101 ± 0.0032
Wet Interior, Vary External Density			
0.0000	0.6008 ± 0.0033	0.6057 ± 0.0032	0.6047 ± 0.0034
0.0010	0.6053 ± 0.0033	0.6023 ± 0.0031	0.6046 ± 0.0036
0.0100	0.6010 ± 0.0033	0.6031 ± 0.0030	0.6036 ± 0.0032
0.0250	0.6058 ± 0.0035	0.6056 ± 0.0034	0.6002 ± 0.0029
0.0500	0.6052 ± 0.0035	0.5996 ± 0.0036	0.6028 ± 0.0037
0.0750	0.5991 ± 0.0035	0.6043 ± 0.0032	0.6017 ± 0.0034
0.1000	0.6022 ± 0.0037	0.6007 ± 0.0033	0.6081 ± 0.0036
0.2000	0.5975 ± 0.0033	0.6064 ± 0.0034	0.6016 ± 0.0032
0.4000	0.6063 ± 0.0038	0.6020 ± 0.0032	0.6090 ± 0.0035
0.6000	0.6063 ± 0.0032	0.6024 ± 0.0032	0.6014 ± 0.0035
0.8000	0.6044 ± 0.0035	0.6016 ± 0.0035	0.6018 ± 0.0034
0.9000	0.6010 ± 0.0033	0.6069 ± 0.0029	0.6041 ± 0.0035
1.0000	0.5986 ± 0.0031	0.6024 ± 0.0038	0.6060 ± 0.0034
Vary Interior and Exterior Density Simultaneously			
0.0000	0.1136 ± 0.0006	0.1110 ± 0.0006	0.1134 ± 0.0007
0.0010	0.1100 ± 0.0006	0.0985 ± 0.0007	0.0825 ± 0.0006
0.0100	0.0989 ± 0.0008	0.0696 ± 0.0007	0.0556 ± 0.0007
0.0250	0.1031 ± 0.0010	0.0769 ± 0.0010	0.0670 ± 0.0008
0.0500	0.1312 ± 0.0013	0.1090 ± 0.0013	0.1037 ± 0.0014
0.0750	0.1628 ± 0.0019	0.1483 ± 0.0018	0.1453 ± 0.0016
0.1000	0.1977 ± 0.0021	0.1854 ± 0.0020	0.1853 ± 0.0020
0.2000	0.3101 ± 0.0029	0.3018 ± 0.0025	0.3069 ± 0.0028
0.4000	0.4269 ± 0.0029	0.4287 ± 0.0032	0.4225 ± 0.0035
0.6000	0.4965 ± 0.0033	0.4952 ± 0.0035	0.4983 ± 0.0038
0.8000	0.5606 ± 0.0032	0.5614 ± 0.0035	0.5572 ± 0.0035
0.9000	0.5803 ± 0.0032	0.5782 ± 0.0037	0.5837 ± 0.0036
1.0000	0.6077 ± 0.0030	0.6011 ± 0.0037	0.5974 ± 0.0036

Table 6.4.4-4 PWR Rods, Single Package 10 CFR 71.55(b)(3) Evaluation k_{eff} Summary

Description	$k_{eff} \pm \sigma$	$k_{eff} + 2\sigma$
Single Cask / Inner Shell Reflected with H_2O	0.6001 ± 0.0030	0.6061
Single Cask / Inner Shell and Lead Reflected with H_2O	0.6079 ± 0.0036	0.6151
Single Cask / Inner Shell, Lead & Outer Shell Reflected with H_2O	0.6020 ± 0.0031	0.6082
Single Intact Cask Reflected with H_2O	0.6008 ± 0.0034	0.6076

Table 6.4.4-5 NAC-LWT Cask with 25 BWR rods, k_{eff} versus Fuel Rod Pitch, 5.0 w/o ^{235}U Initial Enrichment

Fuel Rod Pitch (cm)	Cask $k_{eff} \pm \sigma$ Wet Gap			Cask $k_{eff} \pm \sigma$ Dry Gap		
1.64029	0.45706	±	0.00286	0.45873	±	0.00342
1.89659	0.52452	±	0.00385	0.52673	±	0.00355
2.15289	0.58707	±	0.00413	0.57828	±	0.00381
2.40919	0.62675	±	0.00393	0.62288	±	0.00333
2.66539	0.66556	±	0.00348	0.66648	±	0.00382
2.92169	0.68714	±	0.00383	0.68098	±	0.00317
3.17799	0.69181	±	0.00380	0.70311	±	0.00372
3.43429	0.69862	±	0.00368	0.70173	±	0.00300
3.69059	0.70297	±	0.00367	0.70447	±	0.00333
3.94689	0.69617	±	0.00347	0.69925	±	0.00329
4.20319	0.68521	±	0.00315	0.68556	±	0.00301
4.45949	0.67665	±	0.00369	0.6743	±	0.00337
4.71579	0.65473	±	0.00331	0.66008	±	0.00322
4.97209	0.64283	±	0.00344	0.64691	±	0.00330
5.22839	0.62652	±	0.00300	0.62668	±	0.00293

Table 6.4.4-6 Reactivity with 25 BWR Rods vs. Basket Moderator Density, Normal Conditions, Infinite Array of Casks

Moderator Specific Gravity	Casks Touching			2 Foot Surface-to-Surface			ISO 242.82 cm		
Dry Exterior, Vary Internal Density									
0.0000	0.05656	+ OR -	0.00055	0.05605	+ OR -	0.00059	0.05682	+ OR -	0.00057
0.0010	0.05819	+ OR -	0.00054	0.05788	+ OR -	0.00052	0.05871	+ OR -	0.00055
0.0100	0.06800	+ OR -	0.00062	0.06777	+ OR -	0.00073	0.06698	+ OR -	0.00065
0.0250	0.09072	+ OR -	0.00091	0.09067	+ OR -	0.00099	0.09127	+ OR -	0.00093
0.0500	0.13923	+ OR -	0.00146	0.13684	+ OR -	0.00140	0.13990	+ OR -	0.00125
0.0750	0.18606	+ OR -	0.00191	0.18738	+ OR -	0.00173	0.18799	+ OR -	0.00184
0.1000	0.23476	+ OR -	0.00216	0.23439	+ OR -	0.00210	0.23364	+ OR -	0.00212
0.2000	0.38517	+ OR -	0.00344	0.37607	+ OR -	0.00269	0.37838	+ OR -	0.00317
0.4000	0.53477	+ OR -	0.00344	0.53398	+ OR -	0.00357	0.53238	+ OR -	0.00399
0.6000	0.61570	+ OR -	0.00363	0.61111	+ OR -	0.00332	0.61508	+ OR -	0.00342
0.8000	0.66499	+ OR -	0.00388	0.66829	+ OR -	0.00360	0.66555	+ OR -	0.00367
0.9000	0.67966	+ OR -	0.00366	0.68529	+ OR -	0.00334	0.68097	+ OR -	0.00328
1.0000	0.69240	+ OR -	0.00386	0.70201	+ OR -	0.00364	0.69756	+ OR -	0.00346
Moderator Specific Gravity	**Casks Touching**			**2 Foot Surface-to-Surface**			**ISO 242.82 cm**		
Wet Interior, Vary External Density									
0.0000	0.69610	+ OR -	0.00339	0.69135	+ OR -	0.00338	0.69935	+ OR -	0.00329
0.0010	0.70161	+ OR -	0.00391	0.70301	+ OR -	0.00358	0.69066	+ OR -	0.00388
0.0100	0.69020	+ OR -	0.00397	0.69402	+ OR -	0.00352	0.70044	+ OR -	0.00329
0.0250	0.69884	+ OR -	0.00379	0.69871	+ OR -	0.00389	0.70458	+ OR -	0.00381
0.0500	0.69110	+ OR -	0.00349	0.69663	+ OR -	0.00384	0.69940	+ OR -	0.00326
0.0750	0.69634	+ OR -	0.00374	0.70282	+ OR -	0.00323	0.69400	+ OR -	0.00373
0.1000	0.69592	+ OR -	0.00367	0.69793	+ OR -	0.00317	0.69605	+ OR -	0.00352
0.2000	0.69566	+ OR -	0.00323	0.69491	+ OR -	0.00368	0.69803	+ OR -	0.00339
0.4000	0.69463	+ OR -	0.00382	0.69520	+ OR -	0.00331	0.70063	+ OR -	0.00348
0.6000	0.69541	+ OR -	0.00364	0.69413	+ OR -	0.00337	0.69327	+ OR -	0.00354
0.8000	0.69669	+ OR -	0.00329	0.69355	+ OR -	0.00380	0.69196	+ OR -	0.00365
0.9000	0.69587	+ OR -	0.00348	0.70373	+ OR -	0.00343	0.70134	+ OR -	0.00335
1.0000	0.70298	+ OR -	0.00377	0.70245	+ OR -	0.00365	0.69863	+ OR -	0.00333
Moderator Specific Gravity	**Casks Touching**			**2 Foot Surface-to-Surface**			**ISO 242.82 cm**		
Vary Interior and Exterior Density Simulataneously									
0.0000	0.05730	+ OR -	0.00053	0.05650	+ OR -	0.00052	0.05718	+ OR -	0.00049
0.0010	0.05797	+ OR -	0.00060	0.05815	+ OR -	0.00056	0.05839	+ OR -	0.00059
0.0100	0.06703	+ OR -	0.00062	0.06801	+ OR -	0.00070	0.06772	+ OR -	0.00074
0.0250	0.09224	+ OR -	0.00088	0.09213	+ OR -	0.00091	0.09063	+ OR -	0.00087
0.0500	0.14064	+ OR -	0.00150	0.13757	+ OR -	0.00153	0.13709	+ OR -	0.00145
0.0750	0.18790	+ OR -	0.00202	0.18714	+ OR -	0.00212	0.18650	+ OR -	0.00176
0.1000	0.23532	+ OR -	0.00225	0.23607	+ OR -	0.00229	0.23225	+ OR -	0.00256
0.2000	0.38056	+ OR -	0.00314	0.38750	+ OR -	0.00297	0.37600	+ OR -	0.00334
0.4000	0.53150	+ OR -	0.00323	0.53738	+ OR -	0.00338	0.53434	+ OR -	0.00372
0.6000	0.61988	+ OR -	0.00371	0.61154	+ OR -	0.00338	0.61457	+ OR -	0.00380
0.8000	0.66446	+ OR -	0.00377	0.66538	+ OR -	0.00334	0.66393	+ OR -	0.00362
0.9000	0.68590	+ OR -	0.00405	0.68149	+ OR -	0.00338	0.68109	+ OR -	0.00357
1.0000	0.70435	+ OR -	0.00312	0.69210	+ OR -	0.00383	0.69897	+ OR -	0.00348

Table 6.4.4-7 Reactivity with 25 BWR Rods vs. Basket Moderator Density, Accident Conditions, Infinite Array of Casks

Moderator Specific Gravity	Casks Touching			2 Foot Surface-to-Surface			ISO 242.82 cm		
Dry Exterior, Vary Internal Density									
0.0000	0.16678	+ OR -	0.00082	0.16532	+ OR -	0.00081	0.16417	+ OR -	0.00076
0.0010	0.16927	+ OR -	0.00092	0.16818	+ OR -	0.00076	0.16919	+ OR -	0.00083
0.0100	0.19533	+ OR -	0.00098	0.19554	+ OR -	0.00111	0.19714	+ OR -	0.00108
0.0250	0.24529	+ OR -	0.00150	0.24317	+ OR -	0.00136	0.24647	+ OR -	0.00156
0.0500	0.32172	+ OR -	0.00192	0.32000	+ OR -	0.00171	0.32349	+ OR -	0.00190
0.0750	0.38479	+ OR -	0.00267	0.38527	+ OR -	0.00234	0.38571	+ OR -	0.00253
0.1000	0.44132	+ OR -	0.00298	0.43394	+ OR -	0.00301	0.43722	+ OR -	0.00262
0.2000	0.56027	+ OR -	0.00330	0.56105	+ OR -	0.00321	0.55792	+ OR -	0.00334
0.4000	0.62723	+ OR -	0.00380	0.63534	+ OR -	0.00388	0.62068	+ OR -	0.00368
0.6000	0.65834	+ OR -	0.00371	0.65642	+ OR -	0.00342	0.65566	+ OR -	0.00399
0.8000	0.68180	+ OR -	0.00370	0.67879	+ OR -	0.00333	0.68134	+ OR -	0.00369
0.9000	0.69219	+ OR -	0.00333	0.69177	+ OR -	0.00348	0.69876	+ OR -	0.00338
1.0000	0.70574	+ OR -	0.00346	0.70062	+ OR -	0.00308	0.70613	+ OR -	0.00336
Moderator Specific Gravity	**Casks Touching**			**2 Foot Surface-to-Surface**			**ISO 242.82 cm**		
Wet Interior, Vary External Density									
0.0000	0.70485	+ OR -	0.00350	0.70537	+ OR -	0.00380	0.71353	+ OR -	0.00333
0.0010	0.70559	+ OR -	0.00330	0.70379	+ OR -	0.00376	0.70277	+ OR -	0.00317
0.0100	0.69932	+ OR -	0.00319	0.69971	+ OR -	0.00303	0.69208	+ OR -	0.00359
0.0250	0.69882	+ OR -	0.00378	0.69308	+ OR -	0.00346	0.69471	+ OR -	0.00343
0.0500	0.69939	+ OR -	0.00409	0.68428	+ OR -	0.00368	0.69751	+ OR -	0.00374
0.0750	0.69777	+ OR -	0.00369	0.69635	+ OR -	0.00352	0.69247	+ OR -	0.00358
0.1000	0.70068	+ OR -	0.00317	0.69051	+ OR -	0.00326	0.70317	+ OR -	0.00354
0.2000	0.69652	+ OR -	0.00304	0.69519	+ OR -	0.00337	0.69979	+ OR -	0.00329
0.4000	0.69578	+ OR -	0.00351	0.70041	+ OR -	0.00331	0.69308	+ OR -	0.00310
0.6000	0.69367	+ OR -	0.00362	0.69188	+ OR -	0.00404	0.69766	+ OR -	0.00327
0.8000	0.70330	+ OR -	0.00363	0.69912	+ OR -	0.00373	0.70236	+ OR -	0.00344
0.9000	0.69400	+ OR -	0.00340	0.69387	+ OR -	0.00385	0.69551	+ OR -	0.00386
1.0000	0.69902	+ OR -	0.00350	0.69844	+ OR -	0.00344	0.70029	+ OR -	0.00335
Moderator Specific Gravity	**Casks Touching**			**2 Foot Surface-to-Surface**			**ISO 242.82 cm**		
Vary Interior and Exterior Density Simulataneously									
0.0000	0.16499	+ OR -	0.00076	0.16534	+ OR -	0.00084	0.16534	+ OR -	0.00084
0.0010	0.15978	+ OR -	0.00082	0.11798	+ OR -	0.00081	0.11798	+ OR -	0.00081
0.0100	0.14066	+ OR -	0.00100	0.07981	+ OR -	0.00085	0.07981	+ OR -	0.00085
0.0250	0.14370	+ OR -	0.00128	0.09501	+ OR -	0.00100	0.09501	+ OR -	0.00100
0.0500	0.17380	+ OR -	0.00174	0.13825	+ OR -	0.00129	0.13825	+ OR -	0.00129
0.0750	0.21261	+ OR -	0.00179	0.19305	+ OR -	0.00197	0.19305	+ OR -	0.00197
0.1000	0.25648	+ OR -	0.00229	0.23437	+ OR -	0.00233	0.23437	+ OR -	0.00233
0.2000	0.38917	+ OR -	0.00323	0.37995	+ OR -	0.00299	0.37995	+ OR -	0.00299
0.4000	0.53569	+ OR -	0.00371	0.52997	+ OR -	0.00334	0.52997	+ OR -	0.00334
0.6000	0.61450	+ OR -	0.00367	0.61391	+ OR -	0.00352	0.61391	+ OR -	0.00352
0.8000	0.66387	+ OR -	0.00329	0.66631	+ OR -	0.00384	0.66631	+ OR -	0.00384
0.9000	0.68209	+ OR -	0.00360	0.68136	+ OR -	0.00384	0.68136	+ OR -	0.00384
1.0000	0.69742	+ OR -	0.00378	0.68992	+ OR -	0.00387	0.68992	+ OR -	0.00387

Table 6.4.4-8 BWR Rods, Single Package 10 CFR 71.55(b)(3) Evaluation k_{eff} Summary

Description	$k_{eff} \pm \sigma$			$k_{eff} + 2\sigma$
Single Cask/ Inner Shell H_2O Reflected	0.69428	±	0.00368	0.70164
Single Cask/ Inner Shell & Lead H_2O Reflected	0.69355	±	0.00397	0.70149
Single Cask/ Inner Shell, Lead, & Outer Shell H_2O Reflected	0.69532	±	0.00373	0.70278
Single Cask H_2O Reflected	0.69322	±	0.00381	0.70084

Table 6.4.4-9 Maximum Reactivity Pitch Determination for 25 BWR Rods – Water Exterior

Cask Cavity (g/cc)	Exterior (g/cc)	Pitch (cm)	k_{eff}	σ	k_s	$k_{eff}+2\sigma$	Δk	$\Delta k/\sigma$
1	1	1.3840	0.43688	0.00070	0.45218	0.43828	-0.26228	-374.7
1	1	1.6403	0.49775	0.00076	0.51317	0.49927	-0.20129	-264.9
1	1	1.8966	0.55826	0.00078	0.57372	0.55982	-0.14074	-180.4
1	1	2.1529	0.60670	0.00083	0.62226	0.60836	-0.09220	-111.1
1	1	2.4092	0.64459	0.00080	0.66009	0.64619	-0.05437	-68.0
1	1	2.6654	0.67337	0.00081	0.68889	0.67499	-0.02557	-31.6
1	1	2.9217	0.68893	0.00084	0.70451	0.69061	-0.00995	-11.8
1	1	3.1780	0.69768	0.00080	0.71318	0.69928	-0.00128	-1.6
1	1	3.4343	0.69896	0.00080	0.71446	0.70056	--	--
1	1	3.6906	0.69337	0.00077	0.70881	0.69491	-0.00565	-7.3
1	1	3.9469	0.68509	0.00075	0.70049	0.68659	-0.01397	-18.6
1	1	4.2032	0.66997	0.00075	0.68537	0.67147	-0.02909	-38.8
1	1	4.4595	0.65593	0.00074	0.67131	0.65741	-0.04315	-58.3
1	1	4.7158	0.63801	0.00076	0.65343	0.63953	-0.06103	-80.3
1	1	4.9721	0.61716	0.00072	0.63250	0.61860	-0.08196	-113.8
1	1	5.2284	0.59692	0.00070	0.61222	0.59832	-0.10224	-146.1
1	1	5.4846	0.57611	0.00073	0.59147	0.57757	-0.12299	-168.5
1	1	5.7409	0.55318	0.00068	0.56844	0.55454	-0.14602	-214.7
1	1	5.9972	0.53013	0.00070	0.54543	0.53153	-0.16903	-241.5

Table 6.4.4-10 Maximum Reactivity Pitch Determination for 25 PWR Rods – Water Exterior

Cask Cavity (g/cc)	Exterior (g/cc)	Pitch (cm)	k_{eff}	σ	k_s	$k_{eff}+2\sigma$	Δk	$\Delta k/\sigma$
1	1	1.1277	0.38430	0.00070	0.39960	0.38570	-0.21964	-313.8
1	1	1.3840	0.44279	0.00072	0.45813	0.44423	-0.16111	-223.8
1	1	1.6403	0.49656	0.00077	0.51200	0.49810	-0.10724	-139.3
1	1	1.8966	0.53980	0.00073	0.55516	0.54126	-0.06408	-87.8
1	1	2.1529	0.56950	0.00075	0.58490	0.57100	-0.03434	-45.8
1	1	2.4092	0.59041	0.00078	0.60587	0.59197	-0.01337	-17.1
1	1	2.6654	0.60073	0.00077	0.61617	0.60227	-0.00307	-4.0
1	1	2.9217	0.60380	0.00077	0.61924	0.60534	--	--
1	1	3.1780	0.59904	0.00074	0.61442	0.60052	-0.00482	-6.5
1	1	3.4343	0.59206	0.00078	0.60752	0.59362	-0.01172	-15.0
1	1	3.6906	0.57836	0.00069	0.59364	0.57974	-0.02560	-37.1
1	1	3.9469	0.56256	0.00068	0.57782	0.56392	-0.04142	-60.9
1	1	4.2032	0.54640	0.00070	0.56170	0.54780	-0.05754	-82.2
1	1	4.4595	0.52823	0.00069	0.54351	0.52961	-0.07573	-109.8
1	1	4.7158	0.51025	0.00067	0.52549	0.51159	-0.09375	-139.9
1	1	4.9721	0.49011	0.00068	0.50537	0.49147	-0.11387	-167.5
1	1	5.2284	0.47064	0.00066	0.48586	0.47196	-0.13338	-202.1
1	1	5.4846	0.45036	0.00063	0.46552	0.45162	-0.15372	-244.0
1	1	5.7409	0.42865	0.00062	0.44379	0.42989	-0.17545	-283.0
1	1	5.9972	0.40918	0.00059	0.42426	0.41036	-0.19498	-330.5

Table 6.4.4-11 Maximum Reactivity Pitch Determination for 37 BWR Rods – Water Exterior

Cask Cavity (g/cc)	Exterior (g/cc)	Pitch (cm)	k_{eff}	σ	k_s	$k_{eff}+2\sigma$	Δk	$\Delta k/\sigma$
1	1	1.1277	0.41793	0.00067	0.43317	0.41927	-0.31608	-471.8
1	1	1.3840	0.49679	0.00073	0.51215	0.49825	-0.23710	-324.8
1	1	1.6403	0.57355	0.00077	0.58899	0.57509	-0.16026	-208.1
1	1	1.8966	0.63372	0.00081	0.64924	0.63534	-0.10001	-123.5
1	1	2.1529	0.67993	0.00087	0.69557	0.68167	-0.05368	-61.7
1	1	2.4092	0.71022	0.00085	0.72582	0.71192	-0.02343	-27.6
1	1	2.6654	0.72818	0.00082	0.74372	0.72982	-0.00553	-6.7
1	1	2.9217	0.73371	0.00082	0.74925	0.73535	--	--
1	1	3.1780	0.73076	0.00082	0.74630	0.73240	-0.00295	-3.6
1	1	3.4343	0.72100	0.00078	0.73646	0.72256	-0.01279	-16.4
1	1	3.6906	0.70690	0.00076	0.72232	0.70842	-0.02693	-35.4
1	1	3.9469	0.68847	0.00081	0.70399	0.69009	-0.04526	-55.9
1	1	4.2032	0.66618	0.00075	0.68158	0.66768	-0.06767	-90.2
1	1	4.4595	0.64430	0.00073	0.65966	0.64576	-0.08959	-122.7
1	1	4.7158	0.61821	0.00071	0.63353	0.61963	-0.11572	-163.0
1	1	4.9721	0.59337	0.00073	0.60873	0.59483	-0.14052	-192.5
1	1	5.2284	0.56602	0.00068	0.58128	0.56738	-0.16797	-247.0
1	1	5.4846	0.53531	0.00068	0.55057	0.53667	-0.19868	-292.2

Table 6.4.4-12 Maximum Reactivity Pitch Determination for 37 PWR Rods – Water Exterior

Cask Cavity (g/cc)	Exterior (g/cc)	Pitch (cm)	k_{eff}	σ	k_s	$k_{eff}+2\sigma$	Δk	$\Delta k/\sigma$
1	1	1.1277	0.43247	0.00068	0.44773	0.43383	-0.19855	-292.0
1	1	1.3840	0.50187	0.00077	0.51731	0.50341	-0.12897	-167.5
1	1	1.6403	0.55749	0.00078	0.57295	0.55905	-0.07333	-94.0
1	1	1.8966	0.59561	0.00081	0.61113	0.59723	-0.03515	-43.4
1	1	2.1529	0.61842	0.00078	0.63388	0.61998	-0.01240	-15.9
1	1	2.4092	0.62864	0.00079	0.64412	0.63022	-0.00216	-2.7
1	1	2.6654	0.63084	0.00077	0.64628	0.63238	--	--
1	1	2.9217	0.62153	0.00072	0.63687	0.62297	-0.00941	-13.1
1	1	3.1780	0.60939	0.00072	0.62473	0.61083	-0.02155	-29.9
1	1	3.4343	0.59297	0.00070	0.60827	0.59437	-0.03801	-54.3
1	1	3.6906	0.57112	0.00067	0.58636	0.57246	-0.05992	-89.4
1	1	3.9469	0.54994	0.00067	0.56518	0.55128	-0.08110	-121.0
1	1	4.2032	0.52793	0.00069	0.54321	0.52931	-0.10307	-149.4
1	1	4.4595	0.50588	0.00065	0.52108	0.50718	-0.12520	-192.6
1	1	4.7158	0.48106	0.00066	0.49628	0.48238	-0.15000	-227.3
1	1	4.9721	0.45664	0.00063	0.47180	0.45790	-0.17448	-277.0
1	1	5.2284	0.43149	0.00061	0.44661	0.43271	-0.19967	-327.3
1	1	5.4846	0.40582	0.00062	0.42096	0.40706	-0.22532	-363.4

Table 6.4.4-13 Maximum Reactivity Pitch Determination for 61 BWR Rods – Water Exterior

Cask Cavity (g/cc)	Exterior (g/cc)	Pitch (cm)	k_{eff}	σ	k_s	$k_{eff}+2\sigma$	Δk	$\Delta k/\sigma$
1	1	1.1277	0.52008	0.00072	0.53542	0.52152	-0.24512	-340.4
1	1	1.3840	0.61379	0.00081	0.62931	0.61541	-0.15123	-186.7
1	1	1.6403	0.68471	0.00083	0.70027	0.68637	-0.08027	-96.7
1	1	1.8966	0.73218	0.00083	0.74774	0.73384	-0.03280	-39.5
1	1	2.1529	0.75701	0.00082	0.77255	0.75865	-0.00799	-9.7
1	1	2.4092	0.76498	0.00083	0.78054	0.76664	--	--
1	1	2.6654	0.76171	0.00078	0.77717	0.76327	-0.00337	-4.3
1	1	2.9217	0.74933	0.00075	0.76473	0.75083	-0.01581	-21.1
1	1	3.1780	0.72877	0.00074	0.74415	0.73025	-0.03639	-49.2
1	1	3.4343	0.70376	0.00073	0.71912	0.70522	-0.06142	-84.1
1	1	3.6906	0.67540	0.00072	0.69074	0.67684	-0.08980	-124.7
1	1	3.9469	0.64190	0.00069	0.65718	0.64328	-0.12336	-178.8

Table 6.4.4-14 Maximum Reactivity Pitch Determination for 61 PWR Rods – Water Exterior

Cask Cavity (g/cc)	Exterior (g/cc)	Pitch (cm)	k_{eff}	σ	k_s	$k_{eff}+2\sigma$	Δk	$\Delta k/\sigma$
1	1	1.1277	0.52230	0.00075	0.53770	0.52380	-0.13379	-178.4
1	1	1.3840	0.58974	0.00078	0.60520	0.59130	-0.06629	-85.0
1	1	1.6403	0.63319	0.00083	0.64875	0.63485	-0.02274	-27.4
1	1	1.8966	0.65233	0.00077	0.66777	0.65387	-0.00372	-4.8
1	1	2.1529	0.65607	0.00076	0.67149	0.65759	--	--
1	1	2.4092	0.64753	0.00076	0.66295	0.64905	-0.00854	-11.2
1	1	2.6654	0.63012	0.00072	0.64546	0.63156	-0.02603	-36.2
1	1	2.9217	0.60859	0.00073	0.62395	0.61005	-0.04754	-65.1
1	1	3.1780	0.58257	0.00070	0.59787	0.58397	-0.07362	-105.2
1	1	3.4343	0.55274	0.00066	0.56796	0.55406	-0.10353	-156.9
1	1	3.6906	0.52407	0.00066	0.53929	0.52539	-0.13220	-200.3
1	1	3.9469	0.49246	0.00062	0.50760	0.49370	-0.16389	-264.3

Table 6.4.4-15 Maximum Reactivity Pitch Determination for 61 BWR Rods – Void Exterior

Cask Cavity (g/cc)	Exterior (g/cc)	Pitch (cm)	k_{eff}	σ	k_s	$k_{eff}+2\sigma$	Δk	$\Delta k/\sigma$
1	0	1.1277	0.52156	0.00075	0.53696	0.52306	-0.25209	-336.1
1	0	1.3840	0.61695	0.00083	0.63251	0.61861	-0.15654	-188.6
1	0	1.6403	0.68835	0.00083	0.70391	0.69001	-0.08514	-102.6
1	0	1.8966	0.73509	0.00085	0.75069	0.73679	-0.03836	-45.1
1	0	2.1529	0.76248	0.00083	0.77804	0.76414	-0.01101	-13.3
1	0	2.4092	0.77355	0.00080	0.78905	0.77515	--	--
1	0	2.6654	0.77146	0.00079	0.78694	0.77304	-0.00211	-2.7
1	0	2.9217	0.76267	0.00075	0.77807	0.76417	-0.01098	-14.6
1	0	3.1780	0.74480	0.00072	0.76014	0.74624	-0.02891	-40.2
1	0	3.4343	0.72517	0.00073	0.74053	0.72663	-0.04852	-66.5
1	0	3.6906	0.70227	0.00069	0.71755	0.70365	-0.07150	-103.6
1	0	3.9469	0.67451	0.00071	0.68983	0.67593	-0.09922	-139.7

Table 6.4.4-16 Maximum Reactivity Pitch Determination for 61 PWR Rods – Void Exterior

Cask Cavity (g/cc)	Exterior (g/cc)	Pitch (cm)	k_{eff}	σ	k_s	$k_{eff}+2\sigma$	Δk	$\Delta k/\sigma$
1	0	1.1277	0.52341	0.00079	0.53889	0.52499	-0.13907	-176.0
1	0	1.3840	0.59319	0.00077	0.60863	0.59473	-0.06933	-90.0
1	0	1.6403	0.63388	0.00079	0.64936	0.63546	-0.02860	-36.2
1	0	1.8966	0.65655	0.00078	0.67201	0.65811	-0.00595	-7.6
1	0	2.1529	0.66256	0.00075	0.67796	0.66406	--	--
1	0	2.4092	0.65394	0.00072	0.66928	0.65538	-0.00868	-12.1
1	0	2.6654	0.63865	0.00070	0.65395	0.64005	-0.02401	-34.3
1	0	2.9217	0.61660	0.00069	0.63188	0.61798	-0.04608	-66.8
1	0	3.1780	0.59274	0.00066	0.60796	0.59406	-0.07000	-106.1
1	0	3.4343	0.56934	0.00065	0.58454	0.57064	-0.09342	-143.7
1	0	3.6906	0.54287	0.00064	0.55805	0.54415	-0.11991	-187.4
1	0	3.9469	0.51595	0.00063	0.53111	0.51721	-0.14685	-233.1

Table 6.4.4-17 Maximum Reactivity Pitch Determination for 61 BWR Rods – Void Exterior and Preferential Flooding of Cask Cavity

Cask Cavity (g/cc)	Exterior (g/cc)	Pitch (cm)	k_{eff}	σ	k_s	$k_{eff}+2\sigma$	Δk	$\Delta k/\sigma$
0	0	1.1277	0.53776	0.00070	0.55306	0.53916	-0.34644	-494.9
0	0	1.3840	0.70636	0.00077	0.72180	0.70790	-0.17770	-230.8
0	0	1.6403	0.81018	0.00082	0.82572	0.81182	-0.07378	-90.0
0	0	1.8966	0.86442	0.00079	0.87990	0.86600	-0.01960	-24.8
0	0	2.1529	0.88400	0.00080	0.89950	0.88560	--	--
0	0	2.4092	0.87897	0.00077	0.89441	0.88051	-0.00509	-6.6
0	0	2.6654	0.86184	0.00079	0.87732	0.86342	-0.02218	-28.1
0	0	2.9217	0.83244	0.00073	0.84780	0.83390	-0.05170	-70.8
0	0	3.1780	0.79468	0.00071	0.81000	0.79610	-0.08950	-126.1
0	0	3.4343	0.75931	0.00070	0.77461	0.76071	-0.12489	-178.4
0	0	3.6906	0.71973	0.00073	0.73509	0.72119	-0.16441	-225.2

Table 6.4.4-18 Maximum Reactivity Pitch Determination for 61 PWR Rods – Void Exterior and Preferential Flooding of Cask Cavity

Cask Cavity (g/cc)	Exterior (g/cc)	Pitch (cm)	k_{eff}	σ	k_s	$k_{eff}+2\sigma$	Δk	$\Delta k/\sigma$
0	0	1.1277	0.55291	0.00071	0.56823	0.55433	-0.20333	-286.4
0	0	1.3840	0.67194	0.00076	0.68736	0.67346	-0.08420	-110.8
0	0	1.6403	0.73270	0.00078	0.74816	0.73426	-0.02340	-30.0
0	0	1.8966	0.75614	0.00076	0.77156	0.75766	--	--
0	0	2.1529	0.75121	0.00076	0.76663	0.75273	-0.00493	-6.5
0	0	2.4092	0.73087	0.00076	0.74629	0.73239	-0.02527	-33.3
0	0	2.6654	0.70242	0.00072	0.71776	0.70386	-0.05380	-74.7
0	0	2.9217	0.66618	0.00068	0.68144	0.66754	-0.09012	-132.5
0	0	3.1780	0.62965	0.00067	0.64489	0.63099	-0.12667	-189.1
0	0	3.4343	0.59036	0.00065	0.60556	0.59166	-0.16600	-255.4
0	0	3.6906	0.55310	0.00063	0.56826	0.55436	-0.20330	-322.7

Table 6.4.4-19 Damaged Rod Array Area Calculation – Flooded Cask Cavity

Moderation	Number of Rods	Fuel Type	Pitch [cm]	Rod Radius [cm]	# Rods Max	Diameter [cm]	$Area_{Hex}$ [cm^2]
Water Cavity	25	BWR	3.434	0.622	5	14.98	168.3
Water Exterior		PWR	2.922	0.478	5	12.64	119.9
Water Cavity	37	BWR	2.922	0.512	7	18.55	258.2
Water Exterior		PWR	2.665	0.393	7	16.78	211.1
Water Cavity	61	BWR	2.409	0.398	9	20.07	302.1
Water Exterior		PWR	2.153	0.306	9	17.84	238.6

Table 6.4.4-20 Damaged Rod Array Area Calculation – Preferential Flooding

Moderation	Number of Rods	Fuel Type	Pitch [cm]	Rod Radius [cm]	# Rods Max	Diameter [cm]	$Area_{Hex}$ [cm^2]
Partially Flooded Cavity	61	BWR	2.153	0.398	9	18.02	243.5
Void Exterior		PWR	1.897	0.306	9	15.78	186.9

Table 6.4.4-21 Maximum Reactivity Determination for Homogenized UO_2/Water Mixture

Cask Cavity (g/cc)	Exterior (g/cc)	UO_2 Vol Frac	k_{eff}	σ	$k_{eff}+2\sigma$	Δk	$\Delta k/\sigma$
0	0	0.132	0.81043	0.00075	0.81193	-0.00665	-8.9
0	0	0.14	0.81319	0.00075	0.81469	-0.00389	-5.2
0	0	0.15	0.81495	0.00071	0.81637	-0.00221	-3.1
0	0	0.16	0.81702	0.00078	0.81858	--	--
0	0	0.17	0.81592	0.00076	0.81744	-0.00114	-1.5
0	0	0.18	0.81448	0.00078	0.81604	-0.00254	-3.3
0	0	0.19	0.81315	0.00079	0.81473	-0.00385	-4.9
0	0	0.20	0.81080	0.00080	0.81240	-0.00618	-7.7

Table 6.4.4-22 Homogenized UO_2/Water Cask Cavity Moderator Density Study Results - Void Exterior

Cask Cavity (g/cc)	Exterior (g/cc)	UO_2 Vol Frac	k_{eff}	σ	$k_{eff}+2\sigma$	Δk	$\Delta k/\sigma$
0.0	0	0.16	0.81702	0.00078	0.81858	--	--
0.1	0	0.16	0.80234	0.00078	0.80390	-0.01468	-18.8
0.2	0	0.16	0.79078	0.00083	0.79244	-0.02614	-31.5
0.3	0	0.16	0.77986	0.00082	0.78150	-0.03708	-45.2
0.4	0	0.16	0.77082	0.00084	0.77250	-0.04608	-54.9
0.5	0	0.16	0.76440	0.00086	0.76612	-0.05246	-61.0
0.6	0	0.16	0.75856	0.00081	0.76018	-0.05840	-72.1
0.7	0	0.16	0.75823	0.00079	0.75981	-0.05877	-74.4
0.8	0	0.16	0.75812	0.00079	0.75970	-0.05888	-74.5
0.9	0	0.16	0.75836	0.00080	0.75996	-0.05862	-73.3
1.0	0	0.16	0.76077	0.00085	0.76247	-0.05611	-66.0

Table 6.4.4-23 Homogenized UO_2/Water Cask Cavity Moderator Density Study Results - Water Exterior

Cask Cavity (g/cc)	Exterior (g/cc)	UO_2 Vol Frac	k_{eff}	σ	$k_{eff}+2\sigma$	Δk	$\Delta k/\sigma$
0.0	1	0.16	0.65512	0.00078	0.65668	-0.10233	-131.2
0.1	1	0.16	0.68935	0.00083	0.69101	-0.06800	-81.9
0.2	1	0.16	0.70977	0.00084	0.71145	-0.04756	-56.6
0.3	1	0.16	0.72173	0.00084	0.72341	-0.03560	-42.4
0.4	1	0.16	0.72868	0.00079	0.73026	-0.02875	-36.4
0.5	1	0.16	0.73455	0.00083	0.73621	-0.02280	-27.5
0.6	1	0.16	0.73958	0.00081	0.74120	-0.01781	-22.0
0.7	1	0.16	0.74478	0.00082	0.74642	-0.01259	-15.4
0.8	1	0.16	0.74887	0.00084	0.75055	-0.00846	-10.1
0.9	1	0.16	0.75191	0.00082	0.75355	-0.00546	-6.7
1.0	1	0.16	0.75743	0.00079	0.75901	--	--

Table 6.4.4-24 Homogenized UO_2/Water Exterior Moderator Density Study Results – Void Cask Cavity

Cask Cavity (g/cc)	Exterior (g/cc)	UO_2 Vol Frac	k_{eff}	σ	$k_{eff}+2\sigma$	Δk	$\Delta k/\sigma$
0	0.0	0.16	0.81702	0.00078	0.81858	--	--
0	0.1	0.16	0.66923	0.00081	0.67085	-0.14773	-182.4
0	0.2	0.16	0.65897	0.00080	0.66057	-0.15801	-197.5
0	0.3	0.16	0.65619	0.00078	0.65775	-0.16083	-206.2
0	0.4	0.16	0.65607	0.00078	0.65763	-0.16095	-206.3
0	0.5	0.16	0.65449	0.00079	0.65607	-0.16251	-205.7
0	0.6	0.16	0.65513	0.00081	0.65675	-0.16183	-199.8
0	0.7	0.16	0.65479	0.00077	0.65633	-0.16225	-210.7
0	0.8	0.16	0.65445	0.00077	0.65599	-0.16259	-211.2
0	0.9	0.16	0.65591	0.00081	0.65753	-0.16105	-198.8
0	1.0	0.16	0.65512	0.00078	0.65668	-0.16190	-207.6

Table 6.4.4-25 Homogenized UO_2/Water Exterior Moderator Density Study Results – Water Cask Cavity

Cask Cavity (g/cc)	Exterior (g/cc)	UO_2 Vol Frac	k_{eff}	σ	$k_{eff}+2\sigma$	Δk	$\Delta k/\sigma$
1	0.0	0.16	0.76077	0.00085	0.76247	--	--
1	0.1	0.16	0.75700	0.00085	0.75870	-0.00377	-4.4
1	0.2	0.16	0.75719	0.00080	0.75879	-0.00368	-4.6
1	0.3	0.16	0.75696	0.00081	0.75858	-0.00389	-4.8
1	0.4	0.16	0.75430	0.00083	0.75596	-0.00651	-7.8
1	0.5	0.16	0.75574	0.00081	0.75736	-0.00511	-6.3
1	0.6	0.16	0.75516	0.00080	0.75676	-0.00571	-7.1
1	0.7	0.16	0.75480	0.00085	0.75650	-0.00597	-7.0
1	0.8	0.16	0.75601	0.00084	0.75769	-0.00478	-5.7
1	0.9	0.16	0.75542	0.00081	0.75704	-0.00543	-6.7
1	1.0	0.16	0.75743	0.00079	0.75901	-0.00346	-4.4

Table 6.4.4-26 Single Cask Containment Reflected Results Comparison for Homogenized UO_2/Water Model

Cask Configuration	Cask Cavity (g/cc)	Exterior (g/cc)	UO_2 Vol Frac	k_{eff}	σ	$k_{eff}+2\sigma$	Δk	$\Delta k/\sigma$
Array	0	0	0.16	0.81702	0.00078	0.81858	--	--
Single	0	0	0.16	0.50369	0.00076	0.50521	-0.31337	-412.3
Array	1	0	0.16	0.76077	0.00085	0.76247	--	--
Single	1	0	0.16	0.74882	0.00085	0.75052	-0.01195	-14.1
Array	1	1	0.16	0.75743	0.00079	0.75901	--	--
Single	1	1	0.16	0.75043	0.00080	0.75203	-0.00698	-8.7
Array	0	1	0.16	0.65512	0.00078	0.65668	--	--
Single	0	1	0.16	0.54351	0.00078	0.54507	-0.11161	-143.1

6.4.5 TRIGA Fuel Elements

This section presents the criticality evaluation for TRIGA fuel elements in the NAC-LWT with nonpoisoned and poisoned basket modules for intact and failed fuel. In the nonpoisoned configuration, up to 120 intact TRIGA fuel elements can be transported in the NAC-LWT cask. In the poisoned configuration, up to 140 intact TRIGA elements can be transported in the NAC-LWT cask. Up to four TRIGA fuel elements can be contained in screened canisters. Up to two failed TRIGA fuel elements can be contained in sealed canisters. The analyses are performed to satisfy the requirements of 10 CFR Parts 71.55 and 71.59 as well as IAEA Transportation Safety Standards (TS-R-1).

The most reactive TRIGA fuel element type in the NAC-LWT TRIGA basket is evaluated in Section 6.4.5.1. The most reactive basket and intact fuel configurations, including both geometric perturbations and manufacturing tolerances, under wet and dry conditions are evaluated in Section 6.4.5.2. The most reactive cask configuration with three baskets of intact design-basis TRIGA fuel and two baskets of fuel, either in screened cans or in sealed cans, is evaluated under normal and accident conditions in Section 6.4.5.3. Preferential flooding of the screened and sealed failed fuel cans is also evaluated. The maximum k_{eff} of the NAC-LWT cask loaded with design-basis TRIGA fuel is evaluated under normal and accident conditions in Section 6.4.5.4. A single package evaluation, in accordance with 10 CFR 71.55(b)(3), is performed in Section 6.4.5.5. The analyses demonstrates that, including all calculational and mechanical uncertainties, the NAC-LWT cask remains subcritical ($k_s < 0.95$) under normal and accident conditions.

Any combination of TRIGA fuel element types can be placed in the NAC-LWT TRIGA baskets. TRIGA fuel cluster rods are analyzed as separate loadings in Section 6.4.6 and will not be shipped with TRIGA fuel elements.

6.4.5.1 Most Reactive TRIGA Fuel Element

Of the four main types of TRIGA fuel elements (Table 6.2.5-1), three (aluminum clad, stainless steel clad, and FFCR) are explicitly analyzed to determine which element is bounding in terms of criticality. The ACPR fuel element and fuel follower control rod types are eliminated from consideration due to their low ^{235}U loading. For steel clad fuel, the standard, and FLIP LEU-I compositions (Table 6.2.5-2) are also eliminated from further consideration due to their low ^{235}U loading. These element types are bounded by this analysis. The two types of Al clad fuel

elements, each with 20 wt% ^{235}U loading are analyzed, and the two types of stainless steel clad elements (standard streamlined and standard plain) both enriched to either 20 wt% or 70 wt% in ^{235}U are analyzed. The FFCR element is analyzed with FLIP LEU-I composition enriched to 20 wt% ^{235}U.

6.4.5.1.1 Nonpoisoned Basket Most Reactive TRIGA Fuel Element Evaluation

The parametric evaluation of the TRIGA fuel element types for the nonpoisoned basket is performed with the fuel/basket unit cell infinite array model. The reactivities of the seven candidate fuel types are presented in Table 6.4.5-1. The results show that the stainless steel clad, standard plain, TRIGA fuel element with FLIP composition at 70 wt% ^{235}U is the most reactive of all TRIGA fuel element types. Table 6.4.5-1 also includes the results for several combinations of steel FLIP LEU (20 wt% ^{235}U) and FLIP HEU (70 wt% ^{235}U) which are bounded by the results for four 70 wt% ^{235}U elements per basket cell.

6.4.5.1.2 Poisoned Basket Most Reactive TRIGA Fuel Element Evaluation

The parametric evaluation of TRIGA fuel element types for the poisoned basket is performed with an infinite cask array model. The reactivity of the candidate fuel types is presented in Table 6.4.5-2. Again, the results show that the stainless steel clad, standard plain, TRIGA fuel element with FLIP composition at 70 wt% ^{235}U is the most reactive of all TRIGA fuel element types, and combinations of steel FLIP LEU (20 wt% ^{235}U) and FLIP HEU (70 wt% ^{235}U) are bounded by the results for four 70 wt% ^{235}U elements per basket cell. Because of the low relative reactivity of the 14-inch aluminum clad and FFCR (Table 6.4.5-1) elements, it is not necessary to re-analyze these elements.

6.4.5.1.3 Summary of Most Reactive TRIGA Fuel Element Evaluation

The stainless steel clad, standard plain, TRIGA fuel element with FLIP composition at 70 wt% ^{235}U is the most reactive of all TRIGA fuel element types in the poisoned and nonpoisoned baskets. Four of these elements in basket openings bound the other element types and any combination with other such elements. This TRIGA fuel element type and the TRIGA fuel cluster rods will be utilized in subsequent evaluations of the NAC-LWT cask with poisoned and nonpoisoned baskets.

6.4.5.2 Most Reactive Fuel Element and Basket Configurations

The primary basket tolerances affecting system reactivity are geometric tolerances, including the positioning of the fuel elements in the cell opening, the size of the cell opening; and manufacturing tolerances, including the thickness of the steel plate dividing the basket openings. The effect of these tolerances is evaluated sequentially in this section.

6.4.5.2.1 Geometric Perturbations

The TRIGA fuel elements are held in place by basket modules. Each cell opening in the basket module can contain up to four TRIGA fuel elements. The TRIGA fuel elements are not constrained in the opening and, therefore, may shift to any location in the opening. Wet and dry conditions of the TRIGA fuel are evaluated to determine the most reactive fuel element and basket configuration.

Table 6.4.5-3 and Table 6.4.5-4 show the non-poisoned and poisoned axially infinite basket cask k_{eff} with design-basis TRIGA fuel elements. The effects evaluated in the tables include fuel element movement and partial loading in wet and dry basket openings.

For each basket configuration, the most reactive wet configuration contains four design-basis TRIGA fuel elements moved outward to the corners of each cell opening, with k_{eff} = 0.83468 ± 0.00101 and 0.87874 ± 0.00123 for non-poisoned and poisoned basket configurations, respectively. Although the reactivity of the non-poisoned basket configurations with three fuel elements in a cell are similar to that with four rods, the four rod configuration is selected as the most reactive because it contains the greatest amount of ^{235}U. The wet configuration maximizes the moderation between TRIGA fuel elements within the wet cavity and is referred to as the wet configuration for TRIGA fuel elements.

The most reactive dry configuration, with no water in the neutron shield, contains four design-basis TRIGA fuel elements touching in each opening and moved inward to the basket center with k_{eff} = 0.93434 ± 0.00115 and 0.88969 ± 0.00122 for non-poisoned and poisoned basket configurations, respectively. This dry configuration minimizes the neutron leakage of TRIGA fuel elements within the dry basket and is referred to as the dry configuration for TRIGA fuel elements. The partial loading evaluations show a general decrease in reactivity with a decreasing number of fuel elements.

6.4.5.2.2 Manufacturing Tolerance Perturbations

In addition to geometric tolerances, the wet and dry configurations were evaluated to determine the effect of manufacturing tolerances. The dimensional ranges of the plate materials used to construct the basket openings are 0.28 inch minimum/0.3125 inch maximum for the center plate, 0.24 inch minimum/0.295 inch maximum for the outside divider plate, and 0.12 inch minimum/0.13 inch maximum for the outside plate. The cell opening is checked during fabrication to ensure a minimum cell opening of 3.38 inches square, and a maximum cell opening size of 3.48 inches square. The most reactive configurations based on geometric tolerances are utilized in this analysis.

Table 6.4.5-5 and Table 6.4.5-6 show the nonpoisoned and poisoned basket, cask k_{eff} with design-basis TRIGA fuel elements. The effects evaluated in the tables include perturbations on basket plate thickness and basket opening size. For the nonpoisoned basket, within statistical limits, the most reactive wet and dry configurations contain baskets with the minimum stainless steel thickness divider plates. The reactivity of these wet and dry configurations are k_{eff} = 0.86861 ± 0.00094 and k_{eff} = 0.90501 ± 0.00109, respectively. Furthermore, the most reactive dry configuration for manufacturing tolerances contains the minimum basket opening, k_{eff} = 0.90817 ± 0.00105. For the poisoned basket configuration, the perturbations do not significantly increase reactivity.

6.4.5.3 Sealed and Screened Cans Criticality Evaluation

Criticality calculations were performed in screened and sealed failed fuel cans in the top and base basket modules of the cask. Three cases are examined for each basket combination, an all dry system, a full wet system, and a preferentially wet system with water only in the screened or sealed failed fuel can. Fuel in sealed cans is modeled both homogeneously, heterogeneously, and with partial loadings. The three central modules contain intact fuel in the most reactive wet or dry configurations, as appropriate, as determined in Section 6.4.5.2. The reactivities of the failed fuel combinations are compared to the reactivities of respective intact fuel configurations, and moderator density studies are performed on the most reactive configurations in Section 6.4.5.4.

6.4.5.3.1 Screened Failed Fuel Can Evaluations

Table 6.4.5-7 shows the results of the preferential flooding and partial loading studies of the screened failed fuel can configurations with design-basis TRIGA fuel elements in nonpoisoned and poisoned baskets. As seen in the table, the most reactive configurations for the NAC-LWT

cask containing screened cans with TRIGA fuel elements is an infinite array of casks with dry cavities, loaded with preferentially flooded screened cans, with each can containing four fuel elements in the corners of the cans. The most reactive poisoned configuration also contains the maximum can opening size.

The reactivity, k_{eff}, for the nonpoisoned and poisoned configurations is 0.90926 ± 0.00126 and 0.90224 ± 0.00128, respectively. The reactivity of the screened cans in the nonpoisoned basket configuration is bounded by the sealed can evaluations presented in Section 6.4.5.3.2.

6.4.5.3.2 Sealed Failed Fuel Can Evaluations

Table 6.4.5-8 shows the results of the preferential flooding and partial loading studies of the sealed failed fuel can configurations with TRIGA fuel elements in nonpoisoned and poisoned baskets. Included in the sealed can evaluations are homogenous fuel/moderator mixture cases, representing fuel debris, with the mixture either being solid (no water), filling one half of the can or filling the whole can. Cases are evaluated for the solid in the mixture both with and without graphite.

As seen in the table, the most reactive configuration for the NAC-LWT cask with the non-poisoned basket containing sealed cans is for an infinite array of casks with dry cavities loaded with preferentially flooded, maximum diameter, sealed cans, each can containing a homogeneous mixture of water and the fissile material equivalent to two TRIGA fuel elements. The most reactive nonpoisoned configuration is k_{eff} = 0.91355 ± 0.00119. The "Wet Cask/Wet Can, Elements Out" case for the non-poisoned basket was not analyzed because the reactivity of the element configurations is significantly lower than the homogenized mixture configurations.

The most reactive poisoned basket configuration is selected as the case containing flooded cask and cans with elements touching the can wall. The reactivity, k_{eff}, for this configuration is 0.88574 ± 0.00130. Since the screened can reactivity presented in Section 6.4.5.3.1 is higher, this configuration is bounded.

6.4.5.4 Moderator Density Criticality Evaluations for Intact TRIGA Fuel Elements

The evaluations for normal and accident conditions include moderator density variations in the cask cavity and external environment to the cask. One evaluation is performed for each basket (nonpoisoned / poisoned) combination. Table 6.4.5-9 and Table 6.4.5-10 show the most reactive

configurations for these combinations as determined in Section 6.4.5.3. The tables contain results for infinite axial length models for the intact fuel and finite axial length models with cask end caps for failed fuel. Comparing the reactivity of the more conservative infinite models with finite models is acceptable, provided the result with the highest k_{eff} is always selected. Alternately, converting conservative infinite axial length models to finite axial length models is equally acceptable.

As seen in Table 6.4.5-9, $k_{eff} = 0.93434 \pm 0.00115$ for the most reactive dry configuration with intact, TRIGA fuel elements in the nonpoisoned basket. When reevaluated as a finite axial length cask model with end caps, the resulting $k_{eff} = 0.89731 \pm 0.00117$. As a result, the most reactive configuration of TRIGA fuel elements in the nonpoisoned basket becomes the configuration with two baskets with sealed cans preferentially flooded with a dry cask, $k_{eff} = 0.91355 \pm 0.00119$. This configuration is chosen for further moderator density variation evaluations.

As seen in Table 6.4.5-10, the most reactive configuration of TRIGA fuel elements in the poisoned basket contains two screened cans preferentially flooded with a dry cask. This configuration is chosen for moderator density variations.

Results of the moderator density variation cases for normal and accident conditions for the two basket configurations are presented in Table 6.4.5-11 through Table 6.4.5-14.

As seen in Table 6.4.5-12, the most reactive configuration for the TRIGA fuel elements in the nonpoisoned basket contains two baskets with sealed cans, preferentially flooded, under accident conditions with no water in the cask interior, neutron shield, or exterior, $k_{eff} = 0.9136 \pm 0.0012$. Per Section 6.5.3, this corresponds to $k_s = 0.9328$.

As seen in Table 6.4.5-14, the most reactive configuration for the TRIGA fuel elements in the poisoned basket, contains two baskets with sealed cans, preferentially flooded, under accident conditions with no water in the cask interior, neutron shield, or exterior, $k_{eff} = 0.9022 \pm 0.0015$. Per Section 6.5.3, this corresponds to $k_s = 0.9220$.

6.4.5.5 Single Package Criticality Evaluation

To satisfy 10 CFR 71.55(b)(3), an analysis of the reflection of the containment system (inner shell) by water is performed on a single wet cask. Successive replacement of the cask radial

shields with water reflection is also evaluated for each basket (nonpoisoned/poisoned) combination. As seen in Table 6.4.5-15 and Table 6.4.5-16, the reactivity of the system drops as each radial shield of the cask is replaced by water from the full cask surrounded by water, to the inner shell surrounded by water.

6.4.5.6 Conclusion

Thus, including all calculational and mechanical uncertainties, an infinite array of NAC-LWT casks remains sub-critical, and is below the 0.95 limit, corrected for bias and uncertainty, under normal and accident conditions with:

Nonpoisoned Baskets:

1. 120 TRIGA fuel elements,
2. Screened cans each with four TRIGA fuel elements (top and bottom baskets only),
3. Sealed cans (top and bottom baskets only) with two TRIGA fuel elements.

Poisoned Baskets:

1. 140 TRIGA fuel elements,
2. Screened cans each with four TRIGA fuel elements (top and bottom baskets only),
3. Sealed cans (top and bottom baskets only) with two TRIGA fuel elements.

Table 6.4.5-1 Parametric Study – Fuel / Basket k-infinity versus TRIGA Fuel Element Type, Nonpoisoned Basket

(Infinite Array of Nonpoisoned TRIGA Basket Cells with Four (4) Elements)

Fuel Element Type	Initial U Content wt%	Total U grams	^{235}U wt%	Wet Case Results K(infinity) ± σ	Dry Case Results k(infinity) ± σ
Original Al Clad 14 inch Active Fuel	8-8.5	205	20.0	1.01740 ± 0.00081	1.04129 ± 0.00066
Original Al Clad 15 inch Active Fuel	8-8.5	205	20.0	1.00636 ± 0.00081	1.02634 ± 0.00065
Stand. Streamlined Steel Clad 15 inch Active Fuel (FLIP)	8.5	196	70.0	1.33900 ± 0.00094	1.43012 ± 0.00078
Stand. Plain Steel Clad 15 Active Fuel (FLIP)	8.5	196	70.0	1.33969 ± 0.00097	1.43009 ± 0.00077
Stand. Streamlined Steel Clad FLIP-LEU-II	30.6	845	20.0	1.28517 ± 0.00087	1.31180 ± 0.00073
Stand. Plain Steel Clad FLIP-LEU-II	30.6	845	20.0	1.28512 ± 0.00088	1.31198 ± 0.00072
FFCR Element FLIP-LEU-I	20.0	484	20.0	1.16407 ± 0.00086	1.23186 ± 0.00071
1-70 wt% ^{235}U + 3-20 wt% ^{235}U	--	--	--	1.30429 ± 0.00091	1.34060 ± 0.00071
3-70 wt% ^{235}U + 1-20 wt% ^{235}U	--	--	--	1.32896 ± 0.00092	1.40083 ± 0.00077
2-70 wt% ^{235}U + 2-20 wt% ^{235}U	--	--	--	1.31601 ± 0.00094	1.37156 ± 0.00076

LEU Low Enriched Uranium

FLIP Fuel Life Improvement Program

FFCR Fuel Follower Control Rod

* Resonance treatment for two different fuel types is included.

Table 6.4.5-2 Parametric Study – Cask k_{eff} versus TRIGA Fuel Element Type, Poisoned Basket

Fuel Element Type	Initial U Content wt%	Total U grams	^{235}U wt%	Wet Case Results $k_{eff} \pm \sigma$	Dry Case Results $K_{eff} \pm \sigma$
Original Al Clad 15 inch Active Fuel	8-8.5	205	20.0	0.58906 ± 0.00097	0.47118 ± 0.00076
Stand. Streamlined Steel Clad 15 inch Active Fuel (FLIP)	8.5	196	70.0	0.86504 ± 0.00134	0.85705 ± 0.00112
Stand. Plain Steel Clad 15 Active Fuel (FLIP)	8.5	196	70.0	0.86647 ± 0.00137	0.86610 ± 0.00115
Stand. Streamlined Steel Clad FLIP-LEU-II	30.6	845	20.0	0.83413 ± 0.00130	0.80073 ± 0.00103
Stand. Plain Steel Clad FLIP-LEU-II	30.6	845	20.0	0.83604 ± 0.00127	0.80492 ± 0.00099
1-70 wt% ^{235}U + 3-20 wt% ^{235}U	--	--	--	0.84391 ± 0.00133	0.81589 ± 0.00101
3-70 wt% ^{235}U + 1-20 wt% ^{235}U	--	--	--	0.85826 ± 0.00131	0.84917 ± 0.00108
2-70 wt% ^{235}U + 2-20 wt% ^{235}U	--	--	--	0.85162 ± 0.00129	0.83177 ± 0.00103

Table 6.4.5-3 Axially Infinite Cask k_{eff} with TRIGA Fuel Elements – Fuel Element Placement Perturbations, Nonpoisoned Basket

Basket Configuration	Wet Case Results $k_{eff} \pm \sigma$	Dry Case Results $k_{eff} \pm \sigma$
Elements Touching, Moved In	-	0.93434 ± 0.00115
Elements Touching, Centered	0.77382 ± 0.00109	0.92672 ± 0.00185
Elements Out	0.83468 ± 0.00101	0.90817 ± 0.00105
Elements Centered, Quadrants	0.81340 ± 0.00107	-
Three - 70 wt% ^{235}U Elements (Equilateral)	0.83646 ± 0.00112	-
Three - 70 wt% ^{235}U Elements (in corner)	0.83579 ± 0.00101	0.80629 ± 0.00110
Three - 70 wt% ^{235}U Elements (Isosceles)	0.83468 ± 0.00101	-
Two - 70 wt% ^{235}U Elements (Center)	0.67480 ± 0.00097	0.63503 ± 0.00108
One - 70 wt% ^{235}U Elements (Center)	0.44428 ± 0.00091	-

Table 6.4.5-4 Axially Infinite Cask k_{eff} with TRIGA Fuel Elements – Fuel Element Placement Perturbations, Poisoned Basket

Basket Configuration	Wet Case Results $k_{eff} \pm \sigma$	Dry Case Results $k_{eff} \pm \sigma$
Elements Touching, Moved In	-	0.88969 ± 0.00122
Elements Touching, Centered	0.82705 ± 0.00136	0.87833 ± 0.00122
Elements Touching, Moved Out	-	0.87871 ± 0.00112
Elements Centered, Quadrants	0.86647 ± 0.00134	0.86610 ± 0.00115
Elements Out	0.87874 ± 0.00123	0.85348 ± 0.00114
27 Elements, Touching	0.85014 ± 0.00131	0.66829 ± 0.00114
27 Elements, Corners	0.84686 ± 0.00124	-
26 Elements, Touching	0.82959 ± 0.00124	0.64354 ± 0.00117
26 Elements, Corners	0.81959 ± 0.00126	-
21 Elements, Touching	0.70693 ± 0.00127	0.55021 ± 0.00110
21 Elements, Corners	0.73134 ± 0.00133	-
14 Elements, Touching	0.58154 ± 0.00136	0.39354 ± 0.00097
14 Elements, Corners	0.55112 ± 0.00117	-

Table 6.4.5-5 Axially Infinite Cask k_{eff} with TRIGA Fuel Elements – Basket Manufacturing Tolerance Perturbations, Nonpoisoned Basket

Basket Configuration	Wet Case Results w/ Dry Neutron Shield $k_{eff} \pm \sigma$	Dry Case Results $k_{eff} \pm \sigma$
Base Case[1]	0.86190 ± 0.00089[3]	0.90053 ± 0.00115[4]
Thin SS Plates	0.86861 ± 0.00094	0.90501 ± 0.00109
Maximum Basket Opening[2]	0.86864 ± 0.00097	0.90023 ± 0.00107
Minimum Basket Opening[2]	0.86489 ± 0.00091	0.90817 ± 0.00105

Notes:

1. Both wet and dry base case configurations include elements out to corners of basket openings.
2. Incorporates minimum thickness stainless steel, basket divider plates.
3. Comparable to the "elements out," k_{eff} = 0.83468 ± 0.00101, configuration of Table 6.4.5-3 except the neutron shield is dry.
4. Incorporates the "elements out" configuration.

Table 6.4.5-6 Axially Infinite Cask k_{eff} with TRIGA Fuel Elements – Basket Manufacturing Tolerance Perturbations, Poisoned Basket

Basket Configuration	Wet Case Results $k_{eff} \pm \sigma$	Dry Case Results $k_{eff} \pm \sigma$
Base Case[1]	0.87874 ± 0.00123	0.88969 ± 0.00122
Minimum Opening[2]	0.87832 ± 0.00127	0.89054 ± 0.00107
Increased Central Opening[2]	0.87981 ± 0.00133	0.88722 ± 0.00118
Increased Exterior Openings[2]	0.87875 ± 0.00134	0.88998 ± 0.00120
Increased Central Opening, Decreased Exterior Openings[2]	0.87475 ± 0.00134	0.88724 ± 0.00116

Notes:

1. Most reactive configurations from Table 6.4.5-4.
2. Incorporates minimum thickness stainless steel, basket divider plates.

Table 6.4.5-7 Screened Can Preferential Flooding and Partial Loading Reactivity Evaluations for TRIGA Fuel Elements, Nonpoisoned and Poisoned Baskets

Description	**$k_{eff} \pm \sigma$ Nonpoisoned Basket**	**$k_{eff} \pm \sigma$ Poisoned Basket**
Wet Cask / Wet Can	0.84040 ± 0.00132	0.88010 ± 0.00139
Dry Cask / Dry Can	0.89383 ± 0.00120	0.86228 ± 0.00128
Dry Cask / Wet Can – Elements To Center of Cask	0.89778 ± 0.00124	0.88272 ± 0.00124
Dry Cask / Wet Can – Elements To Center of Can	0.89435 ± 0.00124	0.87727 ± 0.00124
Dry Cask / Wet Can – Elements Quadrant Centered	0.89821 ± 0.00129	0.88737 ± 0.00123
Dry Cask / Wet Can – Elements in Corners	0.90926 ± 0.00126	0.89957 ± 0.00118
Dry Cask / Wet Can – Elements in Corners, Max. Can	0.90673 ± 0.00123	0.90224 ± 0.00128
18 Elements per Basket Module	0.84896 ± 0.00121	0.82527 ± 0.00114
12 Elements per Basket Module	0.82532 ± 0.00125	0.80281 ± 0.00119

Table 6.4.5-8 Sealed Can Preferential Flooding and Partial Loading Reactivity Evaluations for TRIGA Fuel Elements, Nonpoisoned and Poisoned Baskets

Description	$k_{eff} \pm \sigma$ Nonpoisoned Basket	$k_{eff} \pm \sigma$ Poisoned Basket
Wet Cask / Wet Can, Elements Out	-	0.88574 ± 0.00130
Wet Cask / Wet Can	0.84331 ± 0.00129	0.88036 ± 0.00125
Dry Cask / Dry Can	0.85693 ± 0.00121	0.83021 ± 0.00118
Dry Cask / Wet Can	0.84376 ± 0.00129	0.78084 ± 0.00114
2 Rods per Can - 3 Five Inch Fuel Pellets	0.84346 ± 0.00128	0.88212 ± 0.00133
Mixture Solid (No Moderator)- 2 Rods Per Can	0.87512 ± 0.00122	0.88371 ± 0.00125
Mixture Half Can Height - 2 Rods Per Can	0.90691 ± 0.00212	0.88564 ± 0.00146
Mixture Full Can Height - 2 Rods Per Can	0.91088 ± 0.00106	0.88411 ± 0.00129
Mixture - Solid (No Moderator) - 1 Rods Per Can	0.85868 ± 0.00132	0.88472 ± 0.00131
Mixture - Half Can Height - 1 Rods Per Can	0.87411 ± 0.00117	0.88204 ± 0.00130
Mixture - Full Can Height - 1 Rods Per Can	0.85913 ± 0.00117	0.88477 ± 0.00142
2 Rods Per Can + Graphite – Solid	0.87208 ± 0.00117	0.88616 ± 0.00138
2 Rods Per Can + Graphite – Full Can Height	0.89867 ± 0.00118	0.88431 ± 0.00129
Increased Can Diameter (+0.02 inch)[1]	0.91355 ± 0.00119	0.88436 ± 0.00138

Notes:

1. The increased can diameter cases were analyzed using the most reactive cases for each basket configuration (nonpoisoned/poisoned). The "Wet Cask/Wet Can, Elements Out" case was selected for the poisoned basket configuration due to the lack of statistically significant differences in the above reported results.

Table 6.4.5-9 Summary of Most Reactive Configurations, TRIGA Fuel Elements, Nonpoisoned Basket

	Wet	Dry	Preferential
Intact Fuel	0.86861 ± 0.00094	0.93434 ± 0.00115 [1]	-
Screened Fuel Cans	0.84040 ± 0.00132	0.89383 ± 0.00120	0.90926 ± 0.00126
Sealed Fuel Cans	0.84331 ± 0.00129	0.85693 ± 0.00121	0.91355 ± 0.00199

Notes:

1. As reported in Section 6.4.5.4, this case is reevaluated with a finite axial length model, making the preferentially flooded, sealed can case the most reactive.

Table 6.4.5-10 Summary of Most Reactive Configurations, TRIGA Fuel Elements, Poisoned Basket

	Wet	Dry	Preferential
Intact Fuel	0.87874 ± 0.00123	0.88969 ± 0.00122	-
Screened Fuel Cans	0.88010 ± 0.00139	0.86228 ± 0.00128	0.90224 ± 0.00128
Sealed Fuel Cans	0.88574 ± 0.00130	0.83021 ± 0.00118	0.88564 ± 0.00146

Table 6.4.5-11 Reactivity Results for TRIGA Fuel Elements, Sealed Cans, Normal Conditions, Nonpoisoned Basket

Moderator SG	Casks Touching ($k_{eff} \pm \sigma$)	8 Foot Center-To-Center ($k_{eff} \pm \sigma$)
Dry Exterior, Vary Internal Density		
0.00000	0.7239 ± 0.0012	0.7203 ± 0.0012
0.00100	0.7205 ± 0.0012	0.7212 ± 0.0012
0.00178	0.7231 ± 0.0013	0.7201 ± 0.0012
0.00316	0.7216 ± 0.0012	0.7202 ± 0.0012
0.00562	0.7227 ± 0.0012	0.7181 ± 0.0012
0.01000	0.7234 ± 0.0012	0.7224 ± 0.0012
0.01780	0.7205 ± 0.0012	0.7223 ± 0.0013
0.03160	0.7249 ± 0.0012	0.7242 ± 0.0012
0.05620	0.7263 ± 0.0012	0.7285 ± 0.0012
0.10000	0.7295 ± 0.0012	0.7303 ± 0.0012
0.17800	0.7446 ± 0.0012	0.7415 ± 0.0012
0.31600	0.7674 ± 0.0012	0.7647 ± 0.0013
0.56200	0.7887 ± 0.0013	0.7884 ± 0.0013
0.70000	0.7977 ± 0.0014	0.7961 ± 0.0014
0.80000	0.8009 ± 0.0013	0.7974 ± 0.0013
0.90000	0.8000 ± 0.0013	0.8008 ± 0.0012
1.00000	0.8020 ± 0.0013	0.8022 ± 0.0014
Optimally Moderated Cask Interior (SG = 1.0), Vary External Density		
0.00000	0.8020 ± 0.0013	0.8022 ± 0.0013
0.00100	0.8013 ± 0.0014	0.8010 ± 0.0013
0.00178	0.7993 ± 0.0014	0.8003 ± 0.0013
0.00316	0.8017 ± 0.0014	0.8024 ± 0.0013
0.00562	0.8041 ± 0.0014	0.8002 ± 0.0013
0.01000	0.8018 ± 0.0013	0.8032 ± 0.0013
0.01780	0.8025 ± 0.0013	0.8018 ± 0.0013
0.03160	0.8001 ± 0.0013	0.8023 ± 0.0013
0.05620	0.8004 ± 0.0014	0.7993 ± 0.0013
0.10000	0.8008 ± 0.0012	0.8000 ± 0.0013
0.17800	0.8018 ± 0.0014	0.8019 ± 0.0013
0.31600	0.8034 ± 0.0014	0.8019 ± 0.0013
0.56200	0.7996 ± 0.0013	0.8025 ± 0.0013
0.70000	0.8018 ± 0.0014	0.8026 ± 0.0014
0.80000	0.8013 ± 0.0013	0.8009 ± 0.0013
0.90000	0.7998 ± 0.0013	0.8009 ± 0.0012
1.00000	0.8019 ± 0.0015	0.8003 ± 0.0013
Vary Internal and External Density Simultaneously		
0.00000	0.7239 ± 0.0012	0.7203 ± 0.0013
0.00100	0.7212 ± 0.0012	0.7192 ± 0.0012
0.00178	0.7210 ± 0.0011	0.7236 ± 0.0012
0.00316	0.7202 ± 0.0012	0.7217 ± 0.0012
0.00562	0.7225 ± 0.0012	0.7218 ± 0.0012
0.01000	0.7229 ± 0.0012	0.7236 ± 0.0012
0.01780	0.7230 ± 0.0012	0.7239 ± 0.0012
0.03160	0.7253 ± 0.0013	0.7236 ± 0.0012
0.05620	0.7273 ± 0.0012	0.7261 ± 0.0013
0.10000	0.7311 ± 0.0012	0.7296 ± 0.0013
0.17800	0.7439 ± 0.0013	0.7429 ± 0.0012
0.31600	0.7634 ± 0.0013	0.7650 ± 0.0013
0.56200	0.7882 ± 0.0014	0.7898 ± 0.0013
0.70000	0.7950 ± 0.0014	0.7941 ± 0.0012
0.80000	0.7950 ± 0.0013	0.7973 ± 0.0013
0.90000	0.7984 ± 0.0012	0.8002 ± 0.0012
1.00000	0.8000 ± 0.0013	0.8029 ± 0.0014

Table 6.4.5-12 Reactivity Results for TRIGA Fuel Elements, Sealed Cans, Accident Conditions, Nonpoisoned Basket

Moderator SG	Casks Touching ($k_{eff} \pm \sigma$)	8 Foot Center-To-Center ($k_{eff} \pm \sigma$)
Dry Exterior and Neutron Shield, Vary Internal Moderator		
0.00000	0.9136 ± 0.0012	0.9057 ± 0.0011
0.00100	0.9119 ± 0.0012	0.9054 ± 0.0011
0.00178	0.9101 ± 0.0012	0.9041 ± 0.0011
0.00316	0.9110 ± 0.0011	0.9040 ± 0.0011
0.00562	0.9095 ± 0.0012	0.9046 ± 0.0011
0.01000	0.9059 ± 0.0012	0.8999 ± 0.0012
0.01780	0.9021 ± 0.0012	0.8979 ± 0.0012
0.03160	0.8965 ± 0.0012	0.8908 ± 0.0011
0.05620	0.8842 ± 0.0013	0.8793 ± 0.0012
0.10000	0.8660 ± 0.0012	0.8622 ± 0.0012
0.17800	0.8432 ± 0.0012	0.8419 ± 0.0012
0.31600	0.8275 ± 0.0013	0.8222 ± 0.0012
0.56200	0.8185 ± 0.0013	0.8153 ± 0.0014
0.70000	0.8144 ± 0.0013	0.8124 ± 0.0013
0.80000	0.8140 ± 0.0013	0.8091 ± 0.0013
0.90000	0.8154 ± 0.0012	0.8082 ± 0.0013
1.00000	0.8117 ± 0.0013	0.8081 ± 0.0013
Optimally Moderated Internal (SG = 0.0), Vary Neutron Shield and Exterior		
0.00000	0.9136 ± 0.0012	0.9057 ± 0.0011
0.00100	0.8950 ± 0.0011	0.8208 ± 0.0012
0.00178	0.8887 ± 0.0011	0.7931 ± 0.0012
0.00316	0.8732 ± 0.0012	0.7651 ± 0.0012
0.00562	0.8505 ± 0.0012	0.7454 ± 0.0011
0.01000	0.8210 ± 0.0011	0.7311 ± 0.0012
0.01780	0.7957 ± 0.0012	0.7233 ± 0.0012
0.03160	0.7655 ± 0.0012	0.7192 ± 0.0011
0.05620	0.7432 ± 0.0012	0.7195 ± 0.0013
0.10000	0.7325 ± 0.0013	0.7177 ± 0.0012
0.17800	0.7252 ± 0.0011	0.7206 ± 0.0012
0.31600	0.7216 ± 0.0012	0.7213 ± 0.0012
0.56200	0.7211 ± 0.0012	0.7211 ± 0.0012
0.70000	0.7199 ± 0.0012	0.7190 ± 0.0012
0.80000	0.7213 ± 0.0012	0.7184 ± 0.0012
0.90000	0.7183 ± 0.0013	0.7196 ± 0.0012
1.00000	0.7189 ± 0.0011	0.7194 ± 0.0013
Vary Interior, Exterior and Neutron Shield Simultaneously		
0.00000	0.9136 ± 0.0012	0.9057 ± 0.0011
0.00100	0.8964 ± 0.0012	0.8189 ± 0.0012
0.00178	0.8879 ± 0.0011	0.7913 ± 0.0013
0.00316	0.8726 ± 0.0012	0.7673 ± 0.0013
0.00562	0.8496 ± 0.0011	0.7459 ± 0.0012
0.01000	0.8223 ± 0.0012	0.7345 ± 0.0012
0.01780	0.7903 ± 0.0012	0.7237 ± 0.0012
0.03160	0.7685 ± 0.0012	0.7223 ± 0.0011
0.05620	0.7504 ± 0.0012	0.7242 ± 0.0012
0.10000	0.7415 ± 0.0013	0.7296 ± 0.0012
0.17800	0.7445 ± 0.0013	0.7404 ± 0.0013
0.31600	0.7674 ± 0.0013	0.7658 ± 0.0013
0.56200	0.7904 ± 0.0013	0.7898 ± 0.0013
0.70000	0.7972 ± 0.0014	0.7936 ± 0.0014
0.80000	0.7969 ± 0.0013	0.7956 ± 0.0014
0.90000	0.8003 ± 0.0013	0.8007 ± 0.0013
1.00000	0.8000 ± 0.0013	0.8013 ± 0.0013

Table 6.4.5-13 Reactivity Results for TRIGA Fuel Elements, Screened Cans, Normal Conditions, Poisoned Basket

Moderator SG	Casks Touching ($k_{eff} \pm \sigma$)	8 Foot Center-To-Center ($k_{eff} \pm \sigma$)
Dry Exterior, Vary Internal Density		
0.00000	0.8376 ± 0.0018	0.8381 ± 0.0017
0.00100	0.8408 ± 0.0017	0.8418 ± 0.0016
0.00178	0.8408 ± 0.0018	0.8412 ± 0.0018
0.00316	0.8390 ± 0.0017	0.8432 ± 0.0016
0.00562	0.8371 ± 0.0017	0.8399 ± 0.0017
0.01000	0.8420 ± 0.0017	0.8397 ± 0.0018
0.01780	0.8383 ± 0.0017	0.8419 ± 0.0017
0.03160	0.8413 ± 0.0017	0.8427 ± 0.0017
0.05620	0.8466 ± 0.0017	0.8448 ± 0.0017
0.10000	0.8433 ± 0.0016	0.8479 ± 0.0017
0.17800	0.8510 ± 0.0017	0.8502 ± 0.0017
0.31600	0.8497 ± 0.0016	0.8505 ± 0.0016
0.56200	0.8453 ± 0.0017	0.8484 ± 0.0017
0.70000	0.8444 ± 0.0016	0.8464 ± 0.0017
0.80000	0.8321 ± 0.0017	0.8432 ± 0.0017
0.90000	0.8458 ± 0.0017	0.8437 ± 0.0017
1.00000	0.8527 ± 0.0017	0.8540 ± 0.0017
Optimally Moderated Cask Interior (SG = 1.0), Vary External Density		
0.00000	0.8527 ± 0.0017	0.8540 ± 0.0017
0.00100	0.8482 ± 0.0018	0.8513 ± 0.0016
0.00178	0.8532 ± 0.0017	0.8513 ± 0.0016
0.00316	0.8516 ± 0.0017	0.8531 ± 0.0017
0.00562	0.8546 ± 0.0017	0.8539 ± 0.0017
0.01000	0.8521 ± 0.0018	0.8517 ± 0.0019
0.01780	0.8528 ± 0.0018	0.8515 ± 0.0018
0.03160	0.8543 ± 0.0017	0.8526 ± 0.0017
0.05620	0.8506 ± 0.0018	0.8503 ± 0.0017
0.10000	0.8523 ± 0.0018	0.8542 ± 0.0016
0.17800	0.8507 ± 0.0018	0.8478 ± 0.0016
0.31600	0.8539 ± 0.0017	0.8518 ± 0.0016
0.56200	0.8545 ± 0.0017	0.8525 ± 0.0017
0.70000	0.8512 ± 0.0017	0.8534 ± 0.0017
0.80000	0.8548 ± 0.0017	0.8529 ± 0.0017
0.90000	0.8523 ± 0.0016	0.8522 ± 0.0017
1.00000	0.8540 ± 0.0018	0.8523 ± 0.0017
Vary Internal and External Density Simultaneously		
0.00000	0.8376 ± 0.0018	0.8381 ± 0.0017
0.00100	0.8396 ± 0.0017	0.8382 ± 0.0017
0.00178	0.8404 ± 0.0016	0.8404 ± 0.0017
0.00316	0.8430 ± 0.0016	0.8413 ± 0.0017
0.00562	0.8448 ± 0.0017	0.8391 ± 0.0016
0.01000	0.8400 ± 0.0017	0.8398 ± 0.0017
0.01780	0.8419 ± 0.0017	0.8424 ± 0.0018
0.03160	0.8394 ± 0.0017	0.8439 ± 0.0017
0.05620	0.8437 ± 0.0017	0.8385 ± 0.0017
0.10000	0.8477 ± 0.0017	0.8477 ± 0.0017
0.17800	0.8502 ± 0.0017	0.8469 ± 0.0017
0.31600	0.8463 ± 0.0017	0.8494 ± 0.0018
0.56200	0.8484 ± 0.0017	0.8513 ± 0.0017
0.70000	0.8471 ± 0.0017	0.8459 ± 0.0018
0.80000	0.8440 ± 0.0017	0.8462 ± 0.0016
0.90000	0.8429 ± 0.0017	0.8451 ± 0.0017
1.00000	0.8540 ± 0.0018	0.8523 ± 0.0017

Table 6.4.5-14 Reactivity Results for TRIGA Fuel Elements, Screened Cans, Accident Conditions, Poisoned Basket

Moderator SG	Casks Touching ($k_{eff} \pm \sigma$)	8 Foot Center-To-Center ($k_{eff} \pm \sigma$)
Dry Exterior and Neutron Shield, Vary Internal Moderator		
0.00000	0.9022 ± 0.0015	0.9015 ± 0.0016
0.00100	0.9019 ± 0.0016	0.9022 ± 0.0016
0.00178	0.8998 ± 0.0016	0.9003 ± 0.0016
0.00316	0.8992 ± 0.0016	0.9009 ± 0.0016
0.00562	0.8995 ± 0.0017	0.9015 ± 0.0017
0.01000	0.8998 ± 0.0017	0.8956 ± 0.0017
0.01780	0.8979 ± 0.0017	0.9003 ± 0.0017
0.03160	0.8966 ± 0.0018	0.8946 ± 0.0016
0.05620	0.8949 ± 0.0015	0.8889 ± 0.0015
0.10000	0.8893 ± 0.0018	0.8844 ± 0.0017
0.17800	0.8843 ± 0.0018	0.8822 ± 0.0016
0.31600	0.8772 ± 0.0017	0.8765 ± 0.0016
0.56200	0.8635 ± 0.0018	0.8640 ± 0.0017
0.70000	0.8586 ± 0.0017	0.8657 ± 0.0017
0.80000	0.8620 ± 0.0016	0.8594 ± 0.0016
0.90000	0.8622 ± 0.0016	0.8600 ± 0.0017
1.00000	0.8662 ± 0.0017	0.8629 ± 0.0018
Optimally Moderated Internal (SG = 0.0), Vary Neutron Shield and Exterior		
0.00000	0.9022 ± 0.0015	0.9015 ± 0.0016
0.00100	0.8970 ± 0.0016	0.8644 ± 0.0017
0.00178	0.8910 ± 0.0016	0.8596 ± 0.0018
0.00316	0.8862 ± 0.0015	0.8542 ± 0.0016
0.00562	0.8789 ± 0.0016	0.8457 ± 0.0016
0.01000	0.8687 ± 0.0015	0.8438 ± 0.0017
0.01780	0.8618 ± 0.0017	0.8409 ± 0.0018
0.03160	0.8539 ± 0.0016	0.8386 ± 0.0017
0.05620	0.8482 ± 0.0017	0.8403 ± 0.0018
0.10000	0.8427 ± 0.0015	0.8381 ± 0.0017
0.17800	0.8433 ± 0.0017	0.8418 ± 0.0016
0.31600	0.8424 ± 0.0018	0.8405 ± 0.0018
0.56200	0.8422 ± 0.0017	0.8391 ± 0.0017
0.70000	0.8438 ± 0.0017	0.8399 ± 0.0016
0.80000	0.8429 ± 0.0018	0.8407 ± 0.0017
0.90000	0.8423 ± 0.0017	0.8445 ± 0.0016
1.00000	0.8398 ± 0.0016	0.8383 ± 0.0017
Vary Interior, Exterior and Neutron Shield Simultaneously		
0.00000	0.9022 ± 0.0015	0.9015 ± 0.0016
0.00100	0.8948 ± 0.0016	0.8662 ± 0.0016
0.00178	0.8932 ± 0.0017	0.8577 ± 0.0016
0.00316	0.8881 ± 0.0016	0.8524 ± 0.0017
0.00562	0.8762 ± 0.0016	0.8429 ± 0.0017
0.01000	0.8722 ± 0.0017	0.8431 ± 0.0017
0.01780	0.8628 ± 0.0016	0.8412 ± 0.0017
0.03160	0.8586 ± 0.0016	0.8450 ± 0.0017
0.05620	0.8533 ± 0.0017	0.8448 ± 0.0018
0.10000	0.8496 ± 0.0017	0.8458 ± 0.0017
0.17800	0.8494 ± 0.0017	0.8489 ± 0.0017
0.31600	0.8500 ± 0.0017	0.8459 ± 0.0017
0.56200	0.8489 ± 0.0018	0.8488 ± 0.0018
0.70000	0.8443 ± 0.0017	0.8463 ± 0.0017
0.80000	0.8459 ± 0.0017	0.8407 ± 0.0018
0.90000	0.8421 ± 0.0017	0.8483 ± 0.0017
1.00000	0.8540 ± 0.0018	0.8504 ± 0.0019

Table 6.4.5-15 Single Package 10 CFR 71.55(b)(3) Evaluation k_{eff} Summary, TRIGA Fuel Element, Nonpoisoned Basket

Description	$k_{eff} \pm \sigma$	k_s
Single Cask / Inner Shell Reflected with H_2O	0.80664 ± 0.00136	0.82616
Single Cask / Inner Shell and Lead Reflected with H_2O	0.84194 ± 0.00130	0.86134
Single Cask / Inner Shell, Lead & Outer Shell Reflected with H_2O	0.84398 ± 0.00128	0.86334
Single Intact Cask Reflected with H_2O	0.84446 ± 0.00126	0.86392

Table 6.4.5-16 Single Package 10 CFR 71.55(b)(3) Evaluation k_{eff} Summary, TRIGA Fuel Element, Poisoned Basket

Description	$k_{eff} \pm \sigma$	k_s
Single Cask / Inner Shell Reflected with H_2O	0.85480 ± 0.00135	0.87430
Single Cask / Inner Shell and Lead Reflected with H_2O	0.87788 ± 0.00136	0.89740
Single Cask / Inner Shell, Lead & Outer Shell Reflected with H_2O	0.88369 ± 0.00133	0.90315
Single Intact Cask Reflected with H_2O	0.88117 ± 0.00131	0.90059

6.4.6 TRIGA Fuel Cluster Rods

This section presents the criticality evaluation for the NAC-LWT with nonpoisoned and poisoned basket modules for intact and failed TRIGA fuel cluster rods. In the nonpoisoned configuration, up to 480 intact TRIGA fuel cluster rods can be transported in the NAC-LWT cask. In the poisoned configuration, up to 560 intact TRIGA fuel cluster rods can be transported in the NAC-LWT cask. Up to six TRIGA fuel cluster rods can be contained in sealed canisters. The analyses are performed to satisfy the requirements of 10 CFR Parts 71.55 and 71.59, as well as IAEA Transportation Safety Standards (TS-R-1).

The design basis TRIGA fuel cluster rod is evaluated for the most reactive basket and intact fuel configurations, including both geometric perturbations and manufacturing tolerances, under wet and dry conditions in Section 6.4.6.1. The most reactive cask configuration with three baskets of intact design-basis TRIGA fuel and two baskets of fuel in sealed cans, is evaluated under normal and accident conditions in Section 6.4.6.2. Preferential flooding of the sealed failed fuel cans is also evaluated. The maximum k_{eff} of the NAC-LWT cask loaded with design-basis TRIGA fuel cluster rods is evaluated under normal and accident conditions in Section 6.4.6.3. A single package evaluation, in accordance with 10 CFR 71.55(b)(3), is performed in Section 6.4.6.4. The analyses demonstrates that, including all calculational and mechanical uncertainties, the NAC-LWT cask remains subcritical ($k_s < 0.95$) under normal and accident conditions.

6.4.6.1 Most Reactive Fuel and Basket Configurations

The primary basket tolerances affecting system reactivity are geometric tolerances, including the positioning of the fuel cluster rods and aluminum tube insert in the cell opening, the size of the cell opening; and manufacturing tolerances, including the thickness of the steel plate dividing the basket openings. The effect of these tolerances is evaluated sequentially in this section.

6.4.6.1.1 Geometric Perturbations

The TRIGA fuel cluster rods are held in place by basket modules and a fuel rod insert (Figure 6.2.6-1) with a welded, 4 × 4 array of 0.75 inch OD aluminum tubes. The TRIGA fuel cluster rods, one per insert tube, may shift to any location in a tube. Wet and dry conditions of the TRIGA fuel cluster rods are evaluated to determine the most reactive fuel and basket configuration.

Table 6.4.6-1 and Table 6.4.6-2 show the cask k_{eff} for the nonpoisoned and poisoned baskets with TRIGA fuel cluster rods. The effects evaluated in the tables include fuel movement within the fuel rod inserts and partial loadings under wet and dry moderation conditions.

The most reactive wet configuration contains 16 TRIGA fuel cluster rods moved outward from the center of each 4 × 4 insert array and the inserts moved to the center of the basket with k_{eff} = 0.7571 ± 0.0025 and 0.7995 ± 0.0026, for the nonpoisoned and poisoned basket configurations, respectively. This wet configuration maximizes the moderation between TRIGA fuel cluster rods within wet inserts and maximizes the interaction between inserts. It is referred to as the wet configuration for TRIGA fuel cluster rods.

The dry configuration selected as most reactive, including no water in the neutron shield, contains 16 TRIGA fuel cluster rods moved inward to the center of each 4 × 4 insert array and the inserts moved to the center of the basket with k_{eff} = 0.8047 ± 0.0020 and 0.7489 ± 0.0019 for the non-poisoned and poisoned basket configurations, respectively. This dry configuration minimizes the neutron leakage of TRIGA fuel cluster rods within the dry basket and is referred to as the dry configuration.

Finally, the effect of partial fuel element loading was examined. Table 6.4.6-1 and Table 6.4.6-2 show that partial loading of the elements in the basket generally serves to decrease the reactivity for both the wet and dry poisoned and nonpoisoned baskets. Although the case with one rod removed from the wet, nonpoisoned basket has a higher k_{eff} than the most reactive full load configuration, the difference in k_{eff} values is significantly less than 2σ. This makes the result statistically insignificant, and the full loading cases can be selected for further evaluation as stated above.

6.4.6.1.2 Manufacturing Tolerance Perturbations

The manufacturing tolerance analyses were performed by sequentially analyzing perturbations to the most reactive configurations from Section 6.4.6.1.1 and retaining appropriate perturbations. First, the effect of reducing the basket plate thickness was examined. Table 6.4.6-3 and Table 6.4.6-4 show that, for the nonpoisoned and poisoned baskets, reducing the thickness of the basket plates increases the reactivity of the system. Thus, this configuration is utilized for the subsequent analyses.

Next, the dimensional tolerances of the aluminum tube inserts were evaluated. Three different cases were examined. The first case examined an increase in the aluminum tube diameter, while

retaining the nominal thickness, the second case examined a decrease in the aluminum tube diameter while retaining the nominal wall thickness, and the third case examined the effect of reducing the aluminum tube thickness. The results presented in Table 6.4.6-3 and Table 6.4.6-4 show that, for the nonpoisoned and poisoned basket configurations, the highest k_{eff} values are obtained for the aluminum tubes at maximum diameter, and for the dry case with the aluminum tubes at minimum thickness. While these cases produced the highest values of k_{eff}, it should be noted that the differences between these results and the previous case is insignificant because they are within 2σ of one another.

After incorporating the previously described modifications, the effect of minimizing the basket insert opening was examined. As shown in Table 6.4.6-3 and Table 6.4.6-4, this perturbation results in equal or higher k_{eff} values for 3 of the 4 cases, with the dry, nonpoisoned case resulting in a slight decrease in k_{eff}. As previously described, these differences are considered insignificant because they differ by less than 2σ. Nevertheless, because this perturbation is expected to increase the interaction between the individual baskets, it is retained in the most reactive configuration for further analysis.

Therefore, the most reactive case for intact fuel in the poisoned basket is selected as a wet configuration consisting of the following features: fuel elements moved away from the center of the aluminum center, aluminum insert moved towards the basket center, minimum divider plate thickness, minimum basket opening, and maximum aluminum tube insert diameter. The resulting reactivity for this system is, $k_{eff} = 0.8025 \pm 0.0025$. Likewise, the most reactive case for intact fuel in the nonpoisoned basket is selected as a dry configuration consisting of the following features: fuel elements moved toward the center of the aluminum insert, aluminum insert moved towards the basket center, minimum divider plate thickness, and minimum basket opening. The resulting reactivity for this system is, $k_{eff} = 0.8129 \pm 0.0021$.

6.4.6.2 Sealed Cans Criticality Evaluation

Criticality calculations were performed for sealed failed fuel cans in the top and base basket modules of the cask. Three cases are examined for each basket combination, an all dry system, a full wet system, and a preferentially wet system with water only in the sealed failed fuel can. Fuel in sealed cans is modeled both homogeneously, heterogeneously, and with partial loadings. The three central modules contain intact fuel in the most reactive wet or dry configurations, as appropriate, as determined in Section 6.4.5.2. The reactivities of the failed fuel combinations are

compared to the reactivities of respective intact fuel configurations, and moderator density studies are performed on the most reactive configurations in Section 6.4.6.3.

Table 6.4.6-5 and Table 6.4.6-6 show the results of the preferential flooding and partial loading studies of the sealed failed fuel can configurations with TRIGA fuel cluster rods in nonpoisoned and poisoned baskets. Each sealed can contains up to six equivalent TRIGA fuel cluster rods. The most reactive cases for the nonpoisoned and poisoned baskets contain maximum outer diameter, preferential wet sealed fuel cans filled with a homogeneous mixture of fuel material and water. The most reactive nonpoisoned and poisoned cases are $k_{eff} = 0.8669 \pm 0.0022$ and $k_{eff} = 0.8384 \pm 0.0021$, respectively.

6.4.6.3 Moderator Density Criticality Evaluations for TRIGA Fuel Cluster Rods

The evaluations for normal and accident conditions include moderator density variations in the cask cavity and external environment to the cask. One evaluation is performed for each basket (nonpoisoned/poisoned) combination. Table 6.4.6-7 and Table 6.4.6-8 show the most reactive configurations for these combinations as determined in Section 6.4.6.2. The tables contain results for infinite axial length models for the intact fuel and finite models with cask end caps for failed fuel. Comparing the reactivity of the more conservative infinite models with finite models is acceptable, provided the result with the highest k_{eff} is always selected. Alternately, converting infinite models to finite models is equally acceptable.

As seen in Table 6.4.6-7 and Table 6.4.6-8, the most reactive nonpoisoned and poisoned basket configurations with TRIGA fuel cluster rods contain two baskets with sealed cans preferentially flooded with a dry cask, $k_{eff} = 0.8669 \pm 0.0022$ and $k_{eff} = 0.8384 \pm 0.0021$, respectively. These configurations are chosen for moderator density variations.

Results of the moderator density variation cases for normal and accident conditions for the nonpoisoned and poisoned basket configurations are presented in Table 6.4.6-9 through Table 6.4.6-12.

As seen in Table 6.4.6-10, the most reactive configuration for the TRIGA fuel cluster rods in the nonpoisoned basket, analyzed conservatively without end caps, contains 5 baskets with intact fuel under accident conditions with no water in the cask interior, neutron shield, or exterior, $k_{eff} = 0.8756 \pm 0.0023$. Per Section 6.5.3, this corresponds to $k_s = 0.8970$.

As seen in Table 6.4.6-12, the most reactive configuration for the TRIGA fuel cluster rods in the poisoned basket, contains two baskets with maximum diameter sealed cans, preferentially flooded, under accident conditions with no water in the cask interior, neutron shield, or exterior, $k_{eff} = 0.8399 \pm 0.0021$. Per Section 6.5.3, this corresponds to $k_s = 0.8609$.

6.4.6.4 Single Package Criticality Evaluation

To satisfy 10 CFR 71.55(b)(3), an analysis of the reflection of the containment system (inner shell) by water is performed on a single wet cask. Successive replacement of the cask radial shields with water reflection is also evaluated for each basket (poisoned/nonpoisoned) configuration. As seen in Table 6.4.6-13 and Table 6.4.6-14, the reactivity of the system drops as each radial shield of the cask is replaced by water, from the full cask surrounded by water, to the inner shell surrounded by water.

6.4.6.5 Increased Fuel Dimensional / Mass Parameter Evaluation

The TRIGA fuel cluster rod contents evaluated previously in this Section, and as presented in Table 6.2.6-1 and Table 6.2.6-2, are based on design basis nominal dimensional and compositional values. To ensure that criticality safety is maintained for parameter values slightly different from those listed in the tables, a set of calculations are performed with increased active fuel length, increased fuel pellet diameter, decreased cladding thickness, and corresponding increases in the uranium and zirconium masses due to the increased volume.

Calculations are performed for two cases based on the most reactive configuration presented in Section 6.4.6.3, which is for the nonpoisoned basket configuration. In each case, the active fuel length is increased to 22.5 inches, the cladding thickness is decreased to 0.015 inch, and the pellet diameter is set at 0.52 inch for the first case, then 0.53 inch for the second case. The results are presented in Table 6.4.6-15.

As seen in the results, the increase in fuel pellet diameter up to 0.53 inch results in an increase in k_s of less than 1.5%. The resulting value is well below the 0.95 limit. Additionally, the increasing reactivity trend is indicative that the increase in fuel pellet diameter results in an increase in reactivity. The increased active fuel height, retaining the overall height the same, results in more fissile material, and reduces the axial gap between the fissile material in each basket. Finally, reducing the cladding thickness increases the reactivity of the system in two ways, increasing the moderator volume and allowing the fuel cluster rods to shift closer to the

center of each cluster rod insert. This shifted configuration was demonstrated to be the most reactive intact rod configuration in Section 6.4.6.1.1.

6.4.6.6 Conclusion

Thus, including all calculational and mechanical uncertainties, an infinite array of NAC-LWT casks remains sub-critical, and is below the 0.95 limit, corrected for bias and uncertainty, under normal and accident conditions with:

Nonpoisoned Baskets:

1. 480 TRIGA fuel cluster rods,
2. Sealed cans (top and bottom baskets only) with up to six TRIGA fuel cluster rods and remainder of baskets filled with intact fuel.

Poisoned Baskets:

1. 560 TRIGA fuel cluster rods,
2. Sealed cans (top and bottom baskets only) with up to six TRIGA fuel cluster rods and remainder of baskets filled with intact fuel.

Increased Fuel Parameters:

1. Maximum Fuel Pellet Diameter – 0.53 inch
2. Minimum Cladding Thickness – 0.015 inch
3. Maximum Active Fuel Height – 22.5 inches
4. Maximum Uranium Mass – 48.6 grams
5. Maximum ^{235}U Mass – 45.4 grams
6. Maximum Zirconium Mass – 421 grams

Table 6.4.6-1 Cask k_{eff} with TRIGA Fuel Cluster Rods – Fuel Rod Placement Perturbations, Nonpoisoned Basket

Basket Configuration	Wet Case Results $k_{eff} \pm \sigma$	Dry Case Results $k_{eff} \pm \sigma$
Nominal Centered Fuel and Al Insert	0.7340 ± 0.0026	0.8001 ± 0.0019
Elements Moved To Al Insert Center	0.7110 ± 0.0027	0.8076 ± 0.0019
Elements Moved Away From Al Insert Center	0.7458 ± 0.0026	0.8005 ± 0.0020
Al Insert Moved To Basket Center[1]	0.7571 ± 0.0025	0.8047 ± 0.0020
Al Insert Moved Away From Basket Center[1]	0.7391 ± 0.0025	0.8027 ± 0.0020
1 Rod Removed From Each Al Insert	0.7576 ± 0.0026	0.7782 ± 0.0020
2 Rods Removed From Each Al Insert	0.7558 ±0.0024	0.7503 ± 0.0020
3 Rods Removed From Each Al Insert	0.7414 ± 0.0022	-

Notes:

1. The most reactive fuel positioning is retained.

Table 6.4.6-2 Cask k_{eff} with TRIGA Fuel Cluster Rods – Fuel Rod Placement Perturbations, Poisoned Basket

Basket Configuration	Wet Case Results $k_{eff} \pm \sigma$	Dry Case Results $k_{eff} \pm \sigma$
Nominal Centered Fuel and Al Insert	0.7809 ± 0.0026	0.7435 ± 0.0020
Elements Moved To Al Insert Center	0.7654 ± 0.0025	0.7501 ± 0.0019
Elements Moved Away From Al Insert Center	0.7922 ± 0.0027	0.7468 ± 0.0020
Al Insert Moved To Basket Center[1]	0.7995 ± 0.0026	0.7489 ± 0.0019
Al Insert Moved Away From Basket Center[1]	0.7914 ± 0.0027	0.7476 ± 0.0022
1 Rod Removed From Each Al Insert	0.7956 ± 0.0027	0.7163 ± 0.0019
2 Rods Removed From Each Al Insert	0.7882 ± 0.0026	0.6831 ± 0.0019
3 Rods Removed From Each Al Insert	0.7764 ± 0.0026	-

Notes:

1. The most reactive fuel in tube motion is retained.

Table 6.4.6-3 Axially Infinite Cask k_{eff} with TRIGA Fuel Cluster Rods – Basket and Insert Manufacturing Tolerance Perturbations, Nonpoisoned Basket

Basket Configuration	Wet Case Results $k_{eff} \pm \sigma$	Dry Case Results $k_{eff} \pm \sigma$
Base Case[1]	0.7571 ± 0.0025	0.8047 ± 0.0020
Thin SS Basket Plates	0.7652 ± 0.0025	0.8140 ± 0.0020
Maximum Al Insert Tube Diameter[2]	0.7653 ± 0.0027	0.8146 ± 0.0022
Minimum Al Insert Tube Diameter[2]	0.7487 ± 0.0025	0.8084 ± 0.0019
Minimum Al Insert Tube Thickness[2]	0.7625 ± 0.0026	0.8157 ± 0.0021
Minimum Basket Opening[2]	0.7682 ± 0.0026 [3]	0.8129 ± 0.0021

Notes:

1. Most reactive configurations as determined in Section 6.4.6.1.1.
2. Incorporates minimum thickness stainless steel, basket divider plates.
3. Maximum aluminum tube diameter.

Table 6.4.6-4 Axially Infinite Cask k_{eff} with TRIGA Fuel Cluster Rods – Basket and Insert Manufacturing Tolerance Perturbations, Poisoned Basket

Basket Configuration	Wet Case Results $k_{eff} \pm \sigma$	Dry Case Results $k_{eff} \pm \sigma$
Base Case[1]	0.7995 ± 0.0026	0.7489 ± 0.0019
Thin SS Basket Plates	0.8019 ± 0.0024	0.7513 ± 0.0020
Maximum Al Insert Tube Diameter[2]	0.8055 ± 0.0027	0.7512 ± 0.0019
Minimum Al Insert Tube Diameter[2]	0.7969 ± 0.0026	0.7507 ± 0.0018
Minimum Al Insert Tube Thickness[2]	0.7995 ± 0.0023	0.7518 ± 0.0019
Minimum Basket Opening[2]	0.8025 ± 0.0025 [3]	0.7518 ± 0.0018 [4]

Notes:

1. Most reactive configurations as determined in Section 6.4.6.1.1.
2. Incorporates minimum thickness stainless steel, basket divider plates.
3. Maximum aluminum tube diameter.
4. Minimum aluminum tube thickness.

Table 6.4.6-5 Sealed Can Preferential Flooding and Partial Loading Reactivity Evaluations for TRIGA Fuel Rod Clusters, Nonpoisoned Basket

Description	$k_{eff} \pm \sigma$ Dry Cask/Dry Can	$k_{eff} \pm \sigma$ Wet Cask/Wet Can	$k_{eff} \pm \sigma$ Dry Cask/Wet Can
1 Solid Fuel Lump	0.7184 ± 0.0025	0.7654 ± 0.0024	0.6954 ± 0.0022
2 Solid Fuel Lumps	0.7053 ± 0.0021	0.7546 ± 0.0025	0.6721 ± 0.0020
3 Solid Fuel Lumps	0.6946 ± 0.0022	0.7597 ± 0.0025	0.6704 ± 0.0022
4 Solid Fuel Lumps	0.6983 ± 0.0020	0.7672 ± 0.0026	0.6714 ± 0.0023
5 Solid Fuel Lumps	0.6995 ± 0.0024	0.7620 ± 0.0028	0.6723 ± 0.0022
Mixture Full Can Height	0.6917 ± 0.0021	0.7592 ± 0.0024	0.8669 ± 0.0022
Mixture Half Can Height	0.6932 ± 0.0021	0.7582 ± 0.0025	0.7226 ± 0.0022
Mixture Full Can Height, 50 % mass	0.6807 ± 0.0022	0.7606 ± 0.0025	0.7416 ± 0.0021

Table 6.4.6-6 Sealed Can Preferential Flooding and Partial Loading Reactivity Evaluations for TRIGA Fuel Rod Clusters, Poisoned Basket

Description	$k_{eff} \pm \sigma$ Dry Cask/Dry Can	$k_{eff} \pm \sigma$ Wet Cask/Wet Can	$k_{eff} \pm \sigma$ Dry Cask/Wet Can
1 Solid Fuel Lump	0.6957 ± 0.0022	0.7937 ± 0.0025	0.6662 ± 0.0020
2 Solid Fuel Lumps	0.6704 ± 0.0021	0.7942 ± 0.0026	0.6405 ± 0.0022
3 Solid Fuel Lumps	0.6610 ± 0.0020	0.7959 ± 0.0026	0.6389 ± 0.0019
4 Solid Fuel Lumps	0.6592 ± 0.0020	0.7986 ± 0.0025	0.6389 ± 0.0022
5 Solid Fuel Lumps	0.6561 ± 0.0019	0.8001 ± 0.0023	0.6409 ± 0.0020
Mixture Full Can Height	0.6507 ± 0.0019	0.7993 ±0.0025	0.8384 ± 0.0021
Mixture Half Can Height	0.6575 ± 0.0019	0.8045 ± 0.0029	0.6741 ± 0.0022
Mixture Full Can Height, 50 % mass	0.6422 ± 0.0019	0.7992 ± 0.0027	0.6957 ± 0.0020

Table 6.4.6-7 Summary of Most Reactive Configurations, TRIGA Fuel Cluster Rods, Nonpoisoned Basket

	Wet	Dry	Preferential
Intact Fuel	0.7682 ± 0.0026	0.8129 ± 0.0021	-
Sealed Fuel Cans[1]	0.7672 ± 0.0026	0.7184 ± 0.0025	0.8669 ± 0.0022

Notes:

1. Remainder of baskets filled with intact fuel.

Table 6.4.6-8 Summary of Most Reactive Configurations, TRIGA Fuel Cluster Rods, Poisoned Basket

	Wet	Dry	Preferential
Intact Fuel	0.8025 ± 0.0025	0.7518 ± 0.0018	-
Sealed Fuel Cans[1]	0.8045 ± 0.0029	0.6957 ± 0.0022	0.8384 ± 0.0021

Notes:

1. Remainder of baskets filled with intact fuel.

Table 6.4.6-9 Reactivity Results for TRIGA Fuel Cluster Rods, Sealed Cans, Normal Conditions, Nonpoisoned Basket

Moderator SG	Casks Touching ($k_{eff} \pm \sigma$)	8 Foot Center-To-Center ($k_{eff} \pm \sigma$)
Dry Exterior, Vary Internal Density		
0.00000	0.7292 ± 0.0023	0.7270 ± 0.0025
0.00100	0.7294 ± 0.0024	0.7258 ± 0.0026
0.00178	0.7262 ± 0.0025	0.7312 ± 0.0025
0.00316	0.7267 ± 0.0024	0.7316 ± 0.0024
0.00562	0.7277 ± 0.0024	0.7294 ± 0.0024
0.01000	0.7240 ± 0.0024	0.7312 ± 0.0023
0.01780	0.7249 ± 0.0025	0.7279 ± 0.0025
0.03160	0.7307 ± 0.0026	0.7322 ± 0.0025
0.05620	0.7392 ± 0.0024	0.7333 ± 0.0024
0.10000	0.7345 ± 0.0024	0.7349 ± 0.0025
0.17800	0.7354 ± 0.0025	0.7339 ± 0.0024
0.31600	0.7298 ± 0.0025	0.7285 ± 0.0025
0.56200	0.7074 ± 0.0024	0.7100 ± 0.0026
0.70000	0.7064 ± 0.0022	0.7055 ± 0.0026
0.80000	0.7140 ± 0.0027	0.7083 ± 0.0024
0.90000	0.7137 ± 0.0026	0.7201 ± 0.0024
1.00000	0.7168 ± 0.0026	0.7216 ± 0.0027
Optimally Moderated Cask Interior (SG = 0.05620), Vary External Density		
0.00000	0.7292 ± 0.0023	0.7270 ± 0.0025
0.00100	0.7354 ± 0.0024	0.7352 ± 0.0028
0.00178	0.7351 ± 0.0025	0.7360 ± 0.0026
0.00316	0.7347 ± 0.0024	0.7347 ± 0.0023
0.00562	0.7329 ± 0.0025	0.7372 ± 0.0025
0.01000	0.7303 ± 0.0023	0.7316 ± 0.0024
0.01780	0.7306 ± 0.0024	0.7296 ± 0.0027
0.03160	0.7296 ± 0.0025	0.7339 ± 0.0024
0.05620	0.7321 ± 0.0023	0.7324 ± 0.0022
0.10000	0.7369 ± 0.0023	0.7305 ± 0.0021
0.17800	0.7325 ± 0.0024	0.7343 ± 0.0025
0.31600	0.7307 ± 0.0026	0.7324 ± 0.0024
0.56200	0.7297 ± 0.0028	0.7359 ± 0.0025
0.70000	0.7341 ± 0.0021	0.7300 ± 0.0022
0.80000	0.7316 ± 0.0024	0.7359 ± 0.0024
0.90000	0.7334 ± 0.0025	0.7313 ± 0.0026
1.00000	0.7308 ± 0.0025	0.7318 ± 0.0023
Vary Internal and External Density Simultaneously		
0.00000	0.7292 ± 0.0023	0.7270 ± 0.0025
0.00100	0.7291 ± 0.0023	0.7275 ± 0.0025
0.00178	0.7271 ± 0.0026	0.7309 ± 0.0024
0.00316	0.7316 ± 0.0025	0.7271 ± 0.0024
0.00562	0.7286 ± 0.0027	0.7277 ± 0.0023
0.01000	0.7288 ± 0.0025	0.7254 ± 0.0024
0.01780	0.7329 ± 0.0024	0.7296 ± 0.0024
0.03160	0.7309 ± 0.0026	0.7300 ± 0.0026
0.05620	0.7321 ± 0.0023	0.7313 ± 0.0026
0.10000	0.7364 ± 0.0024	0.7299 ± 0.0025
0.17800	0.7344 ± 0.0026	0.7335 ± 0.0023
0.31600	0.7299 ± 0.0024	0.7301 ± 0.0026
0.56200	0.7139 ± 0.0026	0.7118 ± 0.0025
0.70000	0.7024 ± 0.0025	0.7025 ± 0.0027
0.80000	0.7116 ± 0.0024	0.7029 ± 0.0023
0.90000	0.7177 ± 0.0028	0.7142 ± 0.0024
1.00000	0.7204 ± 0.0025	0.7187 ± 0.0026

Table 6.4.6-10 Reactivity Results for TRIGA Fuel Cluster Rods, Sealed Can, Accident Conditions, Nonpoisoned Basket

Moderator SG	Casks Touching ($k_{eff} \pm \sigma$)	8 Foot Center-To-Center ($k_{eff} \pm \sigma$)
Dry Exterior and Neutron Shield, Vary Internal Moderator		
0.00000	0.8669 ± 0.0022	0.8756 ± 0.0023
0.00100	0.8725 ± 0.0022	0.8687 ± 0.0022
0.00178	0.8737 ± 0.0022	0.8668 ± 0.0022
0.00316	0.8721 ± 0.0024	0.8744 ± 0.0024
0.00562	0.8703 ± 0.0022	0.8693 ± 0.0024
0.01000	0.8716 ± 0.0022	0.8646 ± 0.0021
0.01780	0.8658 ± 0.0022	0.8614 ± 0.0021
0.03160	0.8620 ± 0.0023	0.8620 ± 0.0021
0.05620	0.8536 ± 0.0022	0.8561 ± 0.0025
0.10000	0.8345 ± 0.0023	0.8373 ± 0.0023
0.17800	0.8138 ± 0.0022	0.8152 ± 0.0024
0.31600	0.7862 ± 0.0021	0.7830 ± 0.0024
0.56200	0.7570 ± 0.0025	0.7500 ± 0.0024
0.70000	0.7439 ± 0.0023	0.7424 ± 0.0027
0.80000	0.7383 ± 0.0025	0.7404 ± 0.0026
0.90000	0.7415 ± 0.0027	0.7391 ± 0.0025
1.00000	0.7398 ± 0.0026	0.7303 ± 0.0026
Optimally Moderated Internal (SG = 0.0), Vary Neutron Shield and Exterior		
0.00000	0.8669 ± 0.0022	0.8756 ± 0.0023
0.00100	0.8620 ± 0.0022	0.7950 ± 0.0023
0.00178	0.8488 ± 0.0022	0.7755 ± 0.0025
0.00316	0.8366 ± 0.0023	0.7509 ± 0.0024
0.00562	0.8209 ± 0.0022	0.7403 ± 0.0024
0.01000	0.7994 ± 0.0023	0.7341 ± 0.0024
0.01780	0.7795 ± 0.0022	0.7272 ± 0.0022
0.03160	0.7618 ± 0.0024	0.7270 ± 0.0025
0.05620	0.7497 ± 0.0025	0.7251 ± 0.0025
0.10000	0.7395 ± 0.0023	0.7238 ± 0.0025
0.17800	0.7300 ± 0.0023	0.7244 ± 0.0025
0.31600	0.7280 ± 0.0024	0.7285 ± 0.0022
0.56200	0.7311 ± 0.0025	0.7283 ± 0.0024
0.70000	0.7322 ± 0.0024	0.7243 ± 0.0025
0.80000	0.7305 ± 0.0025	0.7267 ± 0.0024
0.90000	0.7237 ± 0.0022	0.7324 ± 0.0023
1.00000	0.7286 ± 0.0024	0.7287 ± 0.0025
Vary Interior, Exterior and Neutron Shield Simultaneously		
0.00000	0.8669 ± 0.0022	0.8756 ± 0.0023
0.00100	0.8615 ± 0.0023	0.7989 ± 0.0022
0.00178	0.8550 ± 0.0023	0.7755 ± 0.0025
0.00316	0.8397 ± 0.0022	0.7520 ± 0.0024
0.00562	0.8268 ± 0.0022	0.7439 ± 0.0024
0.01000	0.7988 ± 0.0025	0.7333 ± 0.0025
0.01780	0.7788 ± 0.0024	0.7305 ± 0.0023
0.03160	0.7600 ± 0.0023	0.7259 ± 0.0024
0.05620	0.7510 ± 0.0024	0.7350 ± 0.0024
0.10000	0.7444 ± 0.0024	0.7349 ± 0.0024
0.17800	0.7397 ± 0.0025	0.7298 ± 0.0024
0.31600	0.7284 ± 0.0025	0.7297 ± 0.0024
0.56200	0.7106 ± 0.0022	0.7056 ± 0.0024
0.70000	0.7051 ± 0.0025	0.7004 ± 0.0025
0.80000	0.7146 ± 0.0025	0.7104 ± 0.0027
0.90000	0.7107 ± 0.0025	0.7195 ± 0.0026
1.00000	0.7204 ± 0.0025	0.7251 ± 0.0025

Table 6.4.6-11 Reactivity Results for TRIGA Fuel Cluster Rods, Sealed Cans, Normal Conditions, Poisoned Basket

Moderator SG	Casks Touching ($k_{eff} \pm \sigma$)	8 Foot Center-To-Center ($k_{eff} \pm \sigma$)
Dry Exterior, Vary Internal Density		
0.00000	0.7274 ± 0.0026	0.7319 ± 0.0024
0.00100	0.7342 ± 0.0022	0.7283 ± 0.0023
0.00178	0.7296 ± 0.0024	0.7268 ± 0.0023
0.00316	0.7286 ± 0.0024	0.7328 ± 0.0024
0.00562	0.7294 ± 0.0023	0.7277 ± 0.0023
0.01000	0.7309 ± 0.0022	0.7338 ± 0.0024
0.01780	0.7319 ± 0.0023	0.7308 ± 0.0023
0.03160	0.7338 ± 0.0023	0.7334 ± 0.0023
0.05620	0.7349 ± 0.0024	0.7290 ± 0.0023
0.10000	0.7328 ± 0.0021	0.7339 ± 0.0026
0.17800	0.7346 ± 0.0024	0.7339 ± 0.0023
0.31600	0.7332 ± 0.0026	0.7315 ± 0.0023
0.56200	0.7324 ± 0.0024	0.7308 ± 0.0024
0.70000	0.7245 ± 0.0025	0.7304 ± 0.0023
0.80000	0.7401 ± 0.0025	0.7310 ± 0.0024
0.90000	0.7455 ± 0.0025	0.7375 ± 0.0028
1.00000	0.7573 ± 0.0027	0.7593 ± 0.0026
Optimally Moderated Cask Interior (SG = 1.0), Vary External Density		
0.00000	0.7274 ± 0.0026	0.7319 ± 0.0024
0.00100	0.7667 ± 0.0026	0.7623 ± 0.0026
0.00178	0.7635 ± 0.0024	0.7652 ± 0.0025
0.00316	0.7636 ± 0.0026	0.7596 ± 0.0027
0.00562	0.7675 ± 0.0028	0.7636 ± 0.0027
0.01000	0.7697 ± 0.0025	0.7661 ± 0.0026
0.01780	0.7634 ± 0.0025	0.7615 ± 0.0029
0.03160	0.7664 ± 0.0027	0.7641 ± 0.0024
0.05620	0.7635 ± 0.0030	0.7688 ± 0.0026
0.10000	0.7599 ± 0.0029	0.7676 ± 0.0024
0.17800	0.7622 ± 0.0024	0.7637 ± 0.0024
0.31600	0.7620 ± 0.0026	0.7690 ± 0.0023
0.56200	0.7685 ± 0.0030	0.7643 ± 0.0028
0.70000	0.7632 ± 0.0025	0.7684 ± 0.0028
0.80000	0.7645 ± 0.0028	0.7657 ± 0.0027
0.90000	0.7615 ± 0.0028	0.7624 ± 0.0027
1.00000	0.7641 ± 0.0028	0.7659 ± 0.0025
Vary Internal and External Density Simultaneously		
0.00000	0.7274 ± 0.0026	0.7319 ± 0.0024
0.00100	0.7328 ± 0.0022	0.7281 ± 0.0024
0.00178	0.7279 ± 0.0025	0.7297 ± 0.0024
0.00316	0.7306 ± 0.0023	0.7310 ± 0.0023
0.00562	0.7323 ± 0.0024	0.7331 ± 0.0025
0.01000	0.7291 ± 0.0026	0.7291 ± 0.0024
0.01780	0.7306 ± 0.0024	0.7309 ± 0.0024
0.03160	0.7291 ± 0.0022	0.7314 ± 0.0023
0.05620	0.7292 ± 0.0026	0.7299 ± 0.0024
0.10000	0.7302 ± 0.0026	0.7356 ± 0.0025
0.17800	0.7363 ± 0.0024	0.7288 ± 0.0023
0.31600	0.7366 ± 0.0025	0.7316 ± 0.0025
0.56200	0.7296 ± 0.0026	0.7300 ± 0.0025
0.70000	0.7318 ± 0.0023	0.7276 ± 0.0025
0.80000	0.7350 ± 0.0025	0.7385 ± 0.0024
0.90000	0.7423 ± 0.0027	0.7385 ± 0.0024
1.00000	0.7641 ± 0.0028	0.7659 ± 0.0029

Table 6.4.6-12 Reactivity Results for TRIGA Fuel Cluster Rods, Sealed Cans, Accident Conditions, Poisoned Basket

Moderator SG	Casks Touching ($k_{eff} \pm \sigma$)	8 Foot Center-To-Center ($k_{eff} \pm \sigma$)
Dry Exterior and Neutron Shield, Vary Internal Moderator		
0.00000	0.8384 ± 0.0021	0.8375 ± 0.0023
0.00100	0.8394 ± 0.0022	0.8343 ± 0.0021
0.00178	0.8376 ± 0.0022	0.8316 ± 0.0022
0.00316	0.8373 ± 0.0022	0.8319 ± 0.0024
0.00562	0.8399 ± 0.0021	0.8336 ± 0.0025
0.01000	0.8356 ± 0.0022	0.8321 ± 0.0023
0.01780	0.8380 ± 0.0022	0.8314 ± 0.0022
0.03160	0.8302 ± 0.0025	0.8208 ± 0.0021
0.05620	0.8240 ± 0.0021	0.8188 ± 0.0024
0.10000	0.8127 ± 0.0023	0.8112 ± 0.0023
0.17800	0.7993 ± 0.0024	0.7936 ± 0.0022
0.31600	0.7773 ± 0.0024	0.7738 ± 0.0027
0.56200	0.7616 ± 0.0026	0.7559 ± 0.0023
0.70000	0.7570 ± 0.0025	0.7578 ± 0.0022
0.80000	0.7647 ± 0.0026	0.7589 ± 0.0025
0.90000	0.7728 ± 0.0028	0.7671 ± 0.0026
1.00000	0.7802 ± 0.0026	0.7803 ± 0.0026
Optimally Moderated Internal (SG = 0.0), Vary Neutron Shield and Exterior		
0.00000	0.8384 ± 0.0021	0.8375 ± 0.0023
0.00100	0.8282 ± 0.0022	0.7710 ± 0.0023
0.00178	0.8210 ± 0.0021	0.7593 ± 0.0024
0.00316	0.8150 ± 0.0022	0.7532 ± 0.0023
0.00562	0.7993 ± 0.0023	0.7398 ± 0.0024
0.01000	0.7882 ± 0.0024	0.7336 ± 0.0024
0.01780	0.7664 ± 0.0026	0.7326 ± 0.0024
0.03160	0.7546 ± 0.0024	0.7290 ± 0.0023
0.05620	0.7480 ± 0.0022	0.7285 ± 0.0023
0.10000	0.7387 ± 0.0022	0.7267 ± 0.0022
0.17800	0.7308 ± 0.0023	0.7265 ± 0.0026
0.31600	0.7324 ± 0.0023	0.7310 ± 0.0025
0.56200	0.7278 ± 0.0025	0.7291 ± 0.0022
0.70000	0.7320 ± 0.0023	0.7317 ± 0.0025
0.80000	0.7320 ± 0.0024	0.7268 ± 0.0026
0.90000	0.7313 ± 0.0025	0.7291 ± 0.0026
1.00000	0.7329 ± 0.0025	0.7329 ± 0.0025
Vary Interior, Exterior and Neutron Shield Simultaneously		
0.00000	0.8384 ± 0.0021	0.8375 ± 0.0023
0.00100	0.8269 ± 0.0024	0.7802 ± 0.0024
0.00178	0.8258 ± 0.0021	0.7625 ± 0.0022
0.00316	0.8089 ± 0.0022	0.7525 ± 0.0023
0.00562	0.7928 ± 0.0022	0.7409 ± 0.0025
0.01000	0.7825 ± 0.0023	0.7308 ± 0.0025
0.01780	0.7721 ± 0.0023	0.7305 ± 0.0026
0.03160	0.7552 ± 0.0023	0.7327 ± 0.0023
0.05620	0.7457 ± 0.0023	0.7283 ± 0.0025
0.10000	0.7420 ± 0.0024	0.7343 ± 0.0025
0.17800	0.7365 ± 0.0023	0.7322 ± 0.0026
0.31600	0.7379 ± 0.0024	0.7333 ± 0.0024
0.56200	0.7292 ± 0.0026	0.7333 ± 0.0022
0.70000	0.7286 ± 0.0023	0.7307 ± 0.0027
0.80000	0.7334 ± 0.0023	0.7292 ± 0.0023
0.90000	0.7516 ± 0.0026	0.7517 ± 0.0024
1.00000	0.7608 ± 0.0029	0.7608 ± 0.0029

Table 6.4.6-13 Single Package 10 CFR 71.55(b)(3) Evaluation k_{eff} Summary, TRIGA Fuel Cluster Rod, Nonpoisoned Basket

Description	$k_{eff} \pm \sigma$	k_s
Single Cask / Inner Shell Reflected with H_2O	0.73003 ± 0.00254	0.75191
Single Cask / Inner Shell and Lead Reflected with H_2O	0.76100 ± 0.00243	0.78266
Single Cask / Inner Shell, Lead & Outer Shell Reflected with H_2O	0.76366 ± 0.00240	0.78526
Single Intact Cask Reflected with H_2O	0.76360 ± 0.00273	0.78586

Table 6.4.6-14 Single Package 10 CFR 71.55(b)(3) Evaluation k_{eff} Summary, TRIGA Fuel Cluster Rod, Poisoned Basket

Description	$k_{eff} \pm \sigma$	k_s
Single Cask / Inner Shell Reflected with H_2O	0.76615 ± 0.00265	0.78825
Single Cask / Inner Shell and Lead Reflected with H_2O	0.80117 ± 0.00287	0.82371
Single Cask / Inner Shell, Lead & Outer Shell Reflected with H_2O	0.80106 ± 0.00250	0.82286
Single Intact Cask Reflected with H_2O	0.79815 ± 0.00228	0.81951

Table 6.4.6-15 Increased Fuel Dimensional Parameter k_{eff} Summary, TRIGA Fuel Cluster Rod, Nonpoisoned Basket

Description	$k_{eff} \pm \sigma$	k_s
Base Case (Section 6.4.6.3)	0.8756 ± 0.0023	0.8970
22.5-inch Active Fuel Height 0.015-inch Cladding Thickness 0.52-inch Fuel Pellet Diameter	0.8793 ± 0.0024	0.9009
22.5-inch Active Fuel Height 0.015-inch Cladding Thickness 0.53-inch Fuel Pellet Diameter	0.8876 ± 0.0021	0.9086

6.4.7 DIDO Fuel Assemblies

This section presents the criticality analyses for the NAC-LWT cask with the DIDO fuel assembly and basket configuration. Criticality analyses of the seven assembly arrangement with the most limiting assembly type is performed to satisfy the criticality safety requirements of 10 CFR Parts 71.55 and 71.59, as well as IAEA Transportation Safety Standards (TS-R-1). In this analysis, the bounding DIDO fuel assembly type is determined, and infinite and finite arrays of NAC-LWT casks loaded with the design basis DIDO fuel are studied for criticality under normal and accident conditions. Moderator density in the cavity, neutron shield tank and outside is varied to determine the maximum k_{eff}. The analyses demonstrate that, including all calculational and mechanical uncertainties, the NAC-LWT remains subcritical under normal and accident conditions for all DIDO fuel assemblies.

6.4.7.1 Maximum Reactivity DIDO Assembly

This evaluation determines the maximum reactivity based on LEU, MEU and HEU fuel assembly configurations. Assemblies and baskets are modeled at nominal characteristics under normal conditions (i.e., the neutron shield is assumed intact). The cask interior and exterior are flooded with full density water. Based on the thickness of the neutron shield little interaction between casks is expected resulting in minimal impact of exterior moderator density variations. The results in Table 6.4.7-1 show that the maximum reactivity is obtained from HEU assemblies. The HEU assembly is more reactive than the LEU and MEU assemblies due to reduced parasitic absorption by ^{238}U. The fuel assembly is modeled with uniform cylinder spacing, referred to as "loose fuel elements" in this section, which has reactivity significantly higher than the reactivity of the crimped fuel element.

As demonstrated, the reactivity for LEU and MEU fuel assemblies is significantly lower than that of the HEU assembly. Shipment of LEU, MEU and HEU assemblies in the same basket is therefore permissible.

6.4.7.2 Radial and Axial Assembly Shifting Under Normal Conditions

The reactivity result in Table 6.4.7-1 shows that fuel assemblies axially shifted towards the adjoining basket (i.e., three groups of two baskets) are more reactive than those placed at the top or bottom of the basket. Shifting fuel assemblies in adjoining baskets towards one another brings the maximum fissile material into its closest proximity.

Radial outward shifting of both crimped and loose fuel assemblies shows that system reactivity decreases when shifting the assembly radially out from the center of the cask. Patterns designated as "in" shift the six peripheral fuel assemblies towards the basket center with the centered tube assembly pushed out to approach the +x axis assembly. The radial "out" pattern similarly pushes the six peripheral assemblies away from the basket center. The "custom" pattern indicated in the result table represents the "in" pattern with the center assembly shifted out at 45 degrees. The crimped pattern indicated as "single" corresponds to all assemblies being crimped in the same direction (for this evaluation at an angle of 45 degrees). For the loose fuel cylinder model, there appears to be no statistically significant reactivity difference between the centered or shifted radially in fuel assemblies. For the crimped pattern, crimping the fuel assembly radially out provides for a significant increase in reactivity in the radially shifted in assembly configuration. No significant difference in reactivity for modified crimp directions is shown in the radially out assembly configuration.

6.4.7.3 Radial Shifting and Exterior Moderator Density Changes Under Accident Conditions

The cask accident configuration is one where the material of the neutron shield is replaced by the cask exterior material definition. Both loose and crimped assemblies are evaluated at full density water in the cask interior and at a void exterior under various radial shift conditions. All cases are based on the alternate axial shifting of fuel shown in Section 6.4.7.2 to be the most reactive. Results of these analyses are shown in Table 6.4.7-2. As expected, the void exterior condition produces the maximum reactivity configuration. Reactivity increases due to increased interaction between individual casks in the array.

In addition to the shifted standard "in" configuration, the inward shifted configuration with a centered middle assembly is also evaluated (designated as InC in the result table). This configuration is slightly more reactive than the configuration with all assemblies centered, but it is within the statistical uncertainty band (2 sigma) of the Monte Carlo base result. Mechanical perturbation and uncertainty results are therefore evaluated with the all assemblies centered configuration.

Table 6.4.7-3 displays results for test cases based on modifying the material of the aluminum shell surrounding the basket and the heat transfer shunts in the center of the basket. The base case for this analysis is the radially centered, fully moderated interior, dry exterior configuration. Replacing the shell material by water or steel in the accident model inhibits interaction between

packages and produces lower reactivities in the infinite array of casks. Modeling the heat transfer shunts as all water increases reactivity slightly. This supports modeling the shunts as a set of three small rods with a smaller cross section area.

6.4.7.4 Basket Manufacturing Tolerance Evaluation

In this evaluation, set basket tolerances are applied to the criticality evaluation. The base case for this evaluation is the cask accident model (i.e, neutron shield replaced by exterior moderator which in this case is void) with centered fuel assembly. As shown Table 6.5.7-4, basket tolerances do not produce a significant reactivity increase. Note that the tube wall thickness minimum tolerance is set to a zero percent change. The minimum tube wall case is, therefore, identical to the base case. All further analysis is, therefore, set to nominal basket parameters.

6.4.7.5 Fuel Assembly Tolerance Evaluation

This evaluation contains the fuel assembly perturbation studies. Each of the parameters is evaluated independently with the results compared to the cask accident condition base case. For fuel cylinder pitch, two studies are performed. The first fixes the inner plate (cylinder) and varies the outer three cylinders and is noted as "IF." The second fixes the outer plate and is noted as "OF." Per the reactivity results in Table 6.4.7-5, tolerances that produce an increase in reactivity are:

- Minimum plate thickness (increases moderator between plates)
- Minimum clad thickness
- Maximum plate pitch (outer diameter fixed; increasing the outer diameter will decrease the amount of moderator between assemblies)
- Minimum active fuel height (reduces the space between fissile material in the alternating shifted model)
- Minimum element height (reduces the space between fissile material in the alternating shifted model)
- Maximum fissile mass
- Maximum uranium weight percent (minimum impact but is added to the final reactivity models)

6.4.7.6 Maximum Reactivity Configuration

The parameters shown in Section 6.4.7.5 to increase system reactivity are combined to form a worst case cask payload configuration. The limiting fuel assembly description based on the

critical fuel assembly parameters is shown in Table 6.4.7-12. Table 6.4.7-6 displays the evaluation results of the worst case configured DIDO NAC-LWT. Since the radially in configuration with a centered basket middle assembly was statistically the same as the all centered configuration (see Table 6.4.7-2), both configurations are evaluated with the toleranced fuel parameters. The most reactive configuration for the DIDO assembly in the infinite array configuration is above 0.95. To remain below 0.95 under all conditions, a finite array of 8 casks in close pitch configuration is modeled. The array is reflected by a water boundary condition and is evaluated with a flooded cask interior and void cask exterior. Both eight cask array configurations result in maximum k_s below 0.95. The CSI for the eight cask accident configuration is 12.5. Based on the normal to accident condition reactivity difference of 0.04 Δk, versus the 0.01 Δk that 0.95 was exceeded for the infinite array, the CSI for normal condition is 0 (infinite array is acceptable).

6.4.7.7 Moderator Density Variation Reactivity Configuration

Table 6.4.7-7 contains a cask interior and exterior moderator density variation study for the HEU fuel assembly in the accident configuration. All basket and fuel parameters are set to nominal conditions and an infinite array of casks is evaluated. The basket shows a relatively constant reactivity between cask interior densities of 1.0 g/cm^3 and 0.9 g/cm^3. While reactivity increases above the two sigma (95/95) uncertainty band typically applied in this calculation as statistically significant, the results are within the three sigma (99% confidence) band and are considered constant for the purposes of this calculation (Note that the maximum reactivity of the 8-cask array is below 0.92). At lower interior water densities the reactivity begins to decrease significantly. The exterior density study demonstrates that any significant amount of cask exterior moderator density will reduce the interaction between casks in the array.

6.4.7.8 Single Package Criticality Evaluation

To satisfy 10 CFR 71.55(b)(3), an analysis of the reflection of the containment system (inner shell) by water is performed on a single wet cask. Successive replacement of the cask radial shields with water reflection is also evaluated. A significant decrease in reactivity occurs when the lead gamma shield is replaced by water. The results from this evaluation can be seen in Table 6.4.7-8.

6.4.7.9 Reduced Clad Thickness Evaluations

This section documents the reactivity change due to a reduction in the DIDO element minimum clad thickness to 0.025 cm. The analysis in the previous sections is for a minimum clad thickness of 0.0325 cm.

The effect of the reduced clad thickness on system reactivity is determined by repeating cases from Section 6.4.7.5 and Section 6.4.7.6. Table 6.4.7-9 repeats the Section 6.4.7.5 minimum clad thickness case for the reduced value and compares it to the main section results. As expected, the reduced minimum clad thickness yields a proportional increase in k_{eff}. Table 6.4.7-10 shows the results for the worst-case tolerance combination with the reduced clad thickness for the cases discussed in Section 6.4.7.6. The maximum k_{eff} is based on an eight-cask array with a void exterior. All cases show a slight increase in reactivity due to the reduced clad thickness.

6.4.7.10 Expanded Inner and Outer Shell Diameter Evaluations

Based on the fuel assembly tolerance and moderator studies, a combination of a reduced inner diameter fuel tube ID (Tube 1) with a maximized outer fuel tube ID (Tube 4) is expected to maximize system reactivity (i.e., fuel plates are under-moderated with the previously evaluated conditions and increased pitch will increase system reactivity). Based on tolerances previously applied, the minimum Tube 1 ID is 5.88 cm and the maximum Tube 4 OD is 9.52 cm. This range is evaluated by fixing the Tube 1 ID at minimum and evaluating the nominal, minimum and maximum Tube 4 OD according to the values in the following list.

Tube Number	Min OD (cm)	Nom OD (cm)	Max OD (cm)
1	6.01	6.01	6.01
2	7.05	7.11	7.18
3	8.08	8.22	8.35
4	9.12	9.32	9.52

For this study, the tube pitch is a calculated variable and is larger than the maximum pitch considered in the previous calculation sections.

Table 6.4.7-11 documents the results of the tube diameter study. Based on the trend of increasing reactivity with increasing outer tube OD, the system remains under-moderated. The maximum k_s for the system is 0.9304 for an eight-cask array. Note that significant margin exists in these results, as the basket tube material is modeled as aluminum rather than stainless steel. System reactivity for the steel tube basket at the specified maximum reactivity configuration is < 0. 8.

6.4.7.11 Code Bias and Code Bias Uncertainty Adjustments

A calculation of k_s under normal and accident conditions can now be made based on the previous results and based on the KENO-Va validation statistics presented in Section 6.5.2 for high enriched uranium fuel. The value k_s is calculated based on the KENO-Va Monte Carlo average plus any biases and uncertainties associated with the methods and the modeling, i.e.:

$$k_s = k_{eff} + \Delta k_{Bias} + \Delta k_{BU} + 2\sigma_{MC} \leq 0.95$$

In the validation presented in Section 6.5.2, a bias of -0.0044 (allowance for overprediction of k_{eff}) and a 95/95 method uncertainty of ± 0.0181 was determined. For added conservatism, the -0.0044 bias correction is neglected. With these biases and uncertainties, the equation for k_s becomes:

$$k_s = k_{eff} + 0.0181 + 2\sigma_{MC}$$

k_s values for the relevant analysis are included in Tables 6.4.7-1 through Table 6.4.7-11. The maximum k_s, 0.9304, for the DIDO shipment results from the eight-cask array accident configuration model.

For both normal and accident conditions, the calculated k_{eff} values, after correction for biases and uncertainties, are well below the 0.95 limit. The analyses demonstrate that, including all calculational and mechanical uncertainties, an infinite array of NAC-LWT casks with DIDO fuel remains subcritical under normal and accident conditions.

Table 6.4.7-1 Normal Condition HEU, LEU, MEU DIDO Evaluation

Fuel Type	Fuel Configuration	Crimp Pattern	Radial Shift Pattern	Axial Shift Pattern	k_{eff}	σ	$k_{eff}+2\sigma$	k_s	Δk	$\Delta k_{eff}/\sigma$
LEU	Loose	N/A	Centered	Down	0.82771	0.00067	0.82905	0.84715	-0.03689	-55.1
LEU	Loose	N/A	Centered	Alternating	0.83842	0.00070	0.83982	0.85792	-0.02612	-37.3
LEU	Crimped	Single	Centered	Down	0.81887	0.00069	0.82025	0.83835	-0.04569	-66.2
LEU	Crimped	Single	Centered	Alternating	0.83112	0.00068	0.83248	0.85058	-0.03346	-49.2
MEU	Loose	N/A	Centered	Down	0.84006	0.00070	0.84146	0.85956	-0.02448	-35.0
MEU	Loose	N/A	Centered	Alternating	0.85333	0.00072	0.85477	0.87287	-0.01117	-15.5
MEU	Crimped	Single	Centered	Down	0.83259	0.00070	0.83399	0.85209	-0.03195	-45.6
MEU	Crimped	Single	Centered	Alternating	0.84336	0.00069	0.84474	0.86284	-0.02120	-30.7
HEU	Loose	N/A	Centered	Down	0.85243	0.00070	0.85383	0.87193	-0.01211	-17.3
HEU	Loose	N/A	Centered	Alternating	0.86462	0.00066	0.86594	0.88404	--	--
HEU	Loose	N/A	Centered	Up	0.85275	0.00071	0.85417	0.87227	-0.01177	-16.6
HEU	Loose	N/A	In	Alternating	0.86361	0.00071	0.86503	0.88313	-0.00091	-1.3
HEU	Loose	N/A	Out	Alternating	0.85625	0.00070	0.85765	0.87575	-0.00829	-11.8
HEU	Loose	N/A	Custom	Alternating	0.86562	0.00072	0.86706	0.88516	0.00112	1.6
HEU	Crimped	Single	Centered	Down	0.84084	0.00072	0.84228	0.86038	-0.02366	-32.9
HEU	Crimped	Single	Centered	Alternating	0.85512	0.00069	0.85650	0.87460	-0.00944	-13.7
HEU	Crimped	Single	Centered	Up	0.84075	0.00070	0.84215	0.86025	-0.02379	-34.0
HEU	Crimped	Single	In	Alternating	0.85628	0.00072	0.85772	0.87582	-0.00822	-11.4
HEU	Crimped	Single	Out	Alternating	0.84484	0.00072	0.84628	0.86438	-0.01966	-27.3
HEU	Crimped	Single	Custom	Alternating	0.85688	0.00069	0.85826	0.87636	-0.00768	-11.1
HEU	Crimped	In	In	Alternating	0.84841	0.00071	0.84983	0.86793	-0.01611	-22.7
HEU	Crimped	Out	Out	Alternating	0.84118	0.00072	0.84262	0.86072	-0.02332	-32.4
HEU	Crimped	In	Out	Alternating	0.84552	0.00067	0.84686	0.86496	-0.01908	-28.5
HEU	Crimped	Out	In	Alternating	0.85786	0.00074	0.85934	0.87744	-0.00660	-8.9

Table 6.4.7-2 HEU DIDO Accident Evaluation – Radial Shift and Exterior Moderator Density Variation

Fuel Configuration	Crimp Pattern	Radial Shift Pattern	Interior Moderator Density (g/cm³)	Exterior Moderator Density (g/cm³)	k_{eff}	σ	$k_{eff}+2\sigma$	k_s	Δk	$\Delta k_{eff}/\sigma$
Loose	N/A	Centered	0.9998	0.9998	0.86276	0.00070	0.86416	0.88226	--	--
Loose	N/A	In	0.9998	0.9998	0.86468	0.00070	0.86608	0.88418	0.00192	2.7
Crimped	Out	Centered	0.9998	0.9998	0.85355	0.00068	0.85491	0.87301	-0.00925	-13.6
Crimped	Out	In	0.9998	0.9998	0.85666	0.00069	0.85804	0.87614	-0.00612	-8.9
Loose	N/A	Centered	0.9998	0.0001	0.90900	0.00069	0.91038	0.92848	--	--
Loose	N/A	In	0.9998	0.0001	0.90808	0.00071	0.90950	0.92760	-0.00088	-1.2
Loose	N/A	InC	0.9998	0.0001	0.91011	0.00069	0.91149	0.92959	0.00111	1.6
Crimped	Out	Centered	0.9998	0.0001	0.89962	0.00071	0.90104	0.91914	-0.00934	-13.2
Crimped	Out	In	0.9998	0.0001	0.90116	0.00069	0.90254	0.92064	-0.00784	-11.4

Table 6.4.7-3 DIDO Heat Shunt and Aluminum Shell Evaluation Results

Case Description	k_{eff}	σ	$k_{eff}+2\sigma$	k_s	Δk	$\Delta k_{eff}/\sigma$
Shell modeled as steel	0.90100	0.00067	0.90234	0.92044	-0.00804	-12.0
Shell modeled as water	0.90382	0.00070	0.90522	0.92332	-0.00516	-7.4
Aluminum shunts modeled as water	0.91157	0.00067	0.91291	0.93101	0.00253	3.8

Table 6.4.7-4 DIDO Basket Geometric Tolerance Study Results

Fuel Tube Outer Diameter Tolerance	Fuel Tube Thickness Tolerance	Fuel Tube Height Tolerance	Fuel Basket Base Plate Tolerance	k_{eff}	σ	$k_{eff}+2\sigma$	k_s	Δk	$\Delta k_{eff}/\sigma$
Min	Nominal	Nominal	Nominal	0.90979	0.00070	0.91119	0.92929	0.00081	1.2
Max	Nominal	Nominal	Nominal	0.90959	0.00069	0.91097	0.92907	0.00059	0.9
Nominal	Min	Nominal	Nominal	0.90900	0.00069	0.91038	0.92848	--	--
Nominal	Max	Nominal	Nominal	0.90489	0.00071	0.90631	0.92441	-0.00407	-5.7
Nominal	Nominal	Min	Nominal	0.90954	0.00068	0.91090	0.92900	0.00052	0.8
Nominal	Nominal	Max	Nominal	0.90953	0.00069	0.91091	0.92901	0.00053	0.8
Nominal	Nominal	Nominal	Min	0.90922	0.00067	0.91056	0.92866	0.00018	0.3
Nominal	Nominal	Nominal	Max	0.90858	0.00068	0.90994	0.92804	-0.00044	-0.6

Table 6.4.7-5 DIDO Fuel Assembly Tolerance Study Results

Fuel Cylinder Diameter Tolerance	Fuel Plate Thickness Tolerance	Fuel Plate Clad Thickness Tolerance	Fuel Cylinder Pitch Tolerance	Active Fuel Length Tolerance	Fuel Assembly Height Tolerance	^{235}U Mass Tolerance	Uranium Weight Fraction Tolerance	k_{eff}	σ	$k_{eff}+2\sigma$	k_s	Δk	$\Delta k_{eff}/\sigma$
Min	--	--	--	--	--	--	--	0.91024	0.00069	0.91162	0.92972	0.00124	1.8
Max	--	--	--	--	--	--	--	0.90691	0.00067	0.90825	0.92635	-0.00213	-3.2
--	Min	--	--	--	--	--	--	0.91188	0.00067	0.91322	0.93132	0.00284	4.2
--	Max	--	--	--	--	--	--	0.90539	0.00068	0.90675	0.92485	-0.00363	-5.3
--	--	Min	--	--	--	--	--	0.91253	0.00069	0.91391	0.93201	0.00353	5.1
--	--	Max	--	--	--	--	--	0.90685	0.00069	0.90823	0.92633	-0.00215	-3.1
--	--	--	IF - Max	--	--	--	--	0.90993	0.00068	0.91129	0.92939	0.00091	1.3
--	--	--	IF - Min	--	--	--	--	0.90864	0.00071	0.91006	0.92816	-0.00032	-0.5
--	--	--	OF - Max	--	--	--	--	0.91175	0.00068	0.91311	0.93121	0.00273	4.0
--	--	--	OF - Min	--	--	--	--	0.90787	0.00065	0.90917	0.92727	-0.00121	-1.9
--	--	--	--	Min	--	--	--	0.91067	0.00071	0.91209	0.93019	0.00171	2.4
--	--	--	--	Max	--	--	--	0.90853	0.00068	0.90989	0.92799	-0.00049	-0.7
--	--	--	--	--	Min	--	--	0.91108	0.00066	0.91240	0.93050	0.00202	3.1
--	--	--	--	--	Max	--	--	0.90735	0.00069	0.90873	0.92683	-0.00165	-2.4
--	--	--	--	--	--	Min	--	0.89234	0.00070	0.89374	0.91184	-0.01664	-23.8
--	--	--	--	--	--	Max	--	0.92431	0.00068	0.92567	0.94377	0.01529	22.5
--	--	--	--	--	--	--	Min	0.90761	0.00068	0.90897	0.92707	-0.00141	-2.1
--	--	--	--	--	--	--	Max	0.91070	0.00070	0.91210	0.93020	0.00172	2.5

Table 6.4.7-6 DIDO Fuel Maximum Reactivity Combinations

Cask Array	Radial Shift Pattern	Fuel Cylinder Diameter Tolerance	Fuel Plate Thickness Tolerance	Fuel Plate Clad Thickness Tolerance	Fuel Cylinder Pitch Tolerance	Active Fuel Length Tolerance	Fuel Assembly Height Tolerance	^{235}U Mass Tolerance	Uranium Weight Fraction Tolerance	k_{eff}	σ	$k_{eff}+2\sigma$	k_c
Infinite	Centered	Nominal	Min	Min	OF-Max	Min	Min	Max	Max	0.93813	0.00070	0.93953	0.95763
Infinite	InC	Nominal	Min	Min	OF-Max	Min	Min	Max	Max	0.93639	0.00073	0.93785	0.95595
8 cask	Centered	Nominal	Min	Min	OF-Max	Min	Min	Max	Max	0.89310	0.00072	0.89454	0.91264
8 cask	InC	Nominal	Min	Min	OF-Max	Min	Min	Max	Max	0.89596	0.00070	0.89736	0.91546

Table 6.4.7-7 Moderator Density Study for the Infinite Array of Casks (Nominal Fuel and Basket Configuration)

Radial Shift Pattern	Interior Moderator Density (g/cm³)	Exterior Moderator Density (g/cm³)	k_{eff}	σ	$k_{eff}+2\sigma$	k_s	Δk	$\Delta k_{eff}/\sigma$
EXTERIOR MODERATOR DENSITY STUDY								
Centered	0.9998	0.9	0.86274	0.00066	0.86406	0.88216	-0.04632	-70.2
Centered	0.9998	0.8	0.86320	0.00071	0.86462	0.88272	-0.04576	-64.5
Centered	0.9998	0.6	0.86400	0.00070	0.86540	0.88350	-0.04498	-64.3
Centered	0.9998	0.4	0.86367	0.00073	0.86513	0.88323	-0.04525	-62.0
Centered	0.9998	0.2	0.86441	0.00070	0.86581	0.88391	-0.04457	-63.7
Centered	0.9998	0.1	0.86822	0.00073	0.86968	0.88778	-0.04070	-55.8
INTERIOR MODERATOR DENSITY STUDY								
Centered	0.975	0.0001	0.91103	0.00069	0.91241	0.93051	0.00203	2.9
Centered	0.95	0.0001	0.91097	0.00066	0.91229	0.93039	0.00191	2.9
Centered	0.925	0.0001	0.90942	0.00070	0.91082	0.92892	0.00044	0.6
Centered	0.9	0.0001	0.91079	0.00070	0.91219	0.93029	0.00181	2.6
Centered	0.875	0.0001	0.90928	0.00068	0.91064	0.92874	0.00026	0.4
Centered	0.85	0.0001	0.90869	0.00072	0.91013	0.92823	-0.00025	-0.3
Centered	0.8	0.0001	0.90563	0.00088	0.90739	0.92549	-0.00299	-3.4
Centered	0.6	0.0001	0.88126	0.00102	0.88330	0.90140	-0.02708	-26.5
Centered	0.4	0.0001	0.80903	0.00118	0.81139	0.82949	-0.09899	-83.9
Centered	0.2	0.0001	0.62941	0.00122	0.63185	0.64995	-0.27853	-228.3
Centered	0.0001	0.0001	0.13951	0.00043	0.14037	0.15847	-0.77001	-1790.7
InC	0.975	0.0001	0.90855	0.00067	0.90989	0.92799	-0.00049	-0.7
InC	0.95	0.0001	0.90809	0.00072	0.90953	0.92763	-0.00085	-1.2
InC	0.925	0.0001	0.90723	0.00072	0.90867	0.92677	-0.00171	-2.4
InC	0.9	0.0001	0.90644	0.00071	0.90786	0.92596	-0.00252	-3.5
InC	0.875	0.0001	0.90525	0.00067	0.90659	0.92469	-0.00379	-5.7
InC	0.85	0.0001	0.90377	0.00075	0.90527	0.92337	-0.00511	-6.8
InC	0.8	0.0001	0.90218	0.00070	0.90358	0.92168	-0.00680	-9.7
InC	0.0001	0.0001	0.87289	0.00073	0.87435	0.89245	-0.03603	-49.4

Table 6.4.7-8 DIDO Single Package 10 CFR 71.55(b)(3) Evaluation k_{eff} Summary

Description	$k_{eff} \pm \sigma$	k_s
Single Cask / Inner Shell Reflected with H_2O	0.83670±0.00075	0.85630
Single Cask / Inner Shell and Lead Reflected with H_2O	0.88638±0.00070	0.90588
Single Cask / Inner Shell, Lead & Outer Shell Reflected with H_2O	0.89275±0.00070	0.91225
Single Intact Cask Reflected with H_2O	0.89352±0.00070	0.91302

Table 6.4.7-9 DIDO Fuel Assembly Tolerance Study Results (Reduced Clad Thickness)

Clad Thickness	k_{eff}	σ	$k_{eff}+2\sigma$	k_s	Δk
0.0425 cm (Nominal)	0.90900	0.00069	0.91038	0.92848	--
0.0325 cm (Min)	0.91253	0.00069	0.91391	0.93201	0.00353
0.0250 cm (Revised Min)	0.91578	0.00069	0.91716	0.93526	0.00678

Table 6.4.7-10 DIDO Fuel Maximum Reactivity Combinations (Reduced Clad Thickness)

Cask Array	Radial Shift Pattern	k_{eff}	σ	$k_{eff}+2\sigma$	k_s
Infinite	Centered	0.93921	0.00071	0.94063	0.95873
Infinite	InC	0.93866	0.00072	0.94010	0.95820
8 cask	Centered	0.89293	0.00071	0.89435	0.91245
8 cask	InC	0.89762	0.00071	0.89904	0.91714

Note: Fuel and basket configuration as detailed in Table 6.4.7-6.

Table 6.4.7-11 DIDO Fuel Maximum Reactivity Combinations (Reduced Clad and Maximum Pitch)

Configuration	k_{eff}	σ	$k_{eff}+2\sigma$	k_s
Minimum outer diameter	0.90282	0.00070	0.90422	0.92232
Nominal outer diameter	0.90770	0.00072	0.90914	0.92724
Maximum outer diameter	0.91088	0.00070	0.91228	0.93038

Note: All cases include the minimum inner diameter and the maximum reactivity fuel and basket configuration in an 8-cask array as specified in Sections 6.4.7.6 and 6.1.1.1 as bounding.

Table 6.4.7-12 DIDO Bounding Configurations

Parameter	Value
Number of Fuel Cylinders	4
Plate thickness	≥ 0.130 cm
Clad thickness	≥ 0.025 cm
^{235}U content per Assembly	≤ 190 g
Enrichment wt % ^{235}U	≤ 94
Active Fuel Height	≥ 58.75 cm
Assembly Height(1)	≥ 61.5 cm
Min Tube ID	5.88 cm
Max. Tube OD	9.52 cm

Note:

1. Assembly height provides for spacing of fissile material. An optional spacer may be used to maintain spacing if the assembly is cut to shorter than 61.5 cm.

6.4.8 General Atomics Irradiated Fuel Material

This section presents the criticality analyses for the NAC-LWT cask with GA IFM. Criticality analyses are performed to satisfy the criticality safety requirements of 10 CFR Parts 71.55 and 71.59, as well as IAEA Transportation Safety Standards (TS-R-1). All criticality evaluations performed herein use an axially infinite model. An analysis of the NAC-LWT with a payload of either RERTR or HTGR fuel material shows that the TRIGA elements in the RERTR enclosure are more reactive than the HTGR fuel matrix. A detailed study of the combined payload evaluates TRIGA pitch, TRIGA array type (square or rectangular), interior moderator density including preferential flooding, and exterior moderator density. A single cask evaluation is also performed to comply with 10 CFR 71.55(b)(3). The analyses demonstrate that, including all calculational and mechanical uncertainties, the NAC-LWT remains subcritical under normal and accident conditions for the two GA IFM packages (FHUs).

6.4.8.1 Payload Evaluation

The results of the payload evaluation are used to determine the largest contributor to system reactivity. Four models were executed, with the characteristics listed below:

- TRIGA elements on rectangular 4×5 1.40 cm pitch.
- Flooded and dry HTGR fuel matrix.
- Interior (TRIGA package and cask cavity) moderator density at 0.9982 g/cm^3.
- Exterior moderator density at 0.9982 g/cm^3.

Results are shown in Table 6.4.8-1. Since the TRIGA fuel is the dominant contributor to the system reactivity, the TRIGA bias will be applied in order to calculated the bias-adjusted k_s. The bias is discussed in further detail in Section 6.4.8.8.

6.4.8.2 TRIGA Pitch/Array Evaluation

The combined payload model is used to evaluate the TRIGA element pitch in either a 'Rectangular' or 'Square' array as defined in Section 6.3.7. The HTGR FHU is modeled as dry in this configuration with the remaining cask void spaces flooded. Rectangular and square array results are shown in Table 6.4.8-2 and Table 6.4.8-3, respectively. In the rectangular array, the pitch is limited to 1.65 cm before interferences are created in the model. A larger pitch is possible in the square array, with a value of 1.73 cm allowed by the modeled geometry. The maximum reactivity is calculated for the square array with a pitch of 1.73 cm. Thus, the 1.73 cm pitch is employed in the optimum moderator density studies.

6.4.8.3 Interior Moderator Density Evaluation

The combined payload model is used to vary the interior moderator density with intact TRIGA elements in a square array on a 1.73 cm pitch. Based on the results shown in Table 6.4.8-4, a full density water package interior maximizes system reactivity at full density water exterior moderation.

6.4.8.4 HTGR Matrix Moderator Density Evaluation

The combined payload model is used to vary water density in the HTGR fuel matrix using the fully flooded TRIGA elements in a square array on a 1.73 cm pitch. Based on the results shown in Table 6.4.8-5, a water density of 1.0 g/cc for water homogenized with the HTGR fuel matrix maximizes system reactivity. Note that this configuration is conservative in that the HTGR fuel occupies part of the homogenized volume and full density water cannot occupy the same volume.

6.4.8.5 Exterior Moderator Density Evaluation

The combined payload model is used to vary the exterior moderator density with intact TRIGA elements in a square array on a 1.73 cm pitch. Interior moderator in the FHUs is set to full moderation as indicated by the evaluations in Sections 6.4.8.3 and 6.4.8.4. The cavity exterior to the FHUs is also flooded. Based on the results shown in Table 6.4.8-6, no significant change in system reactivity is obtained if the exterior moderator density varies below full density water. The maximum reactivity change of 2.9 $\Delta k/\sigma$ was obtained at an exterior water density of 0.0001 g/cc. This change, while outside the 2 $\Delta k/\sigma$ typical threshold for a significant change in reactivity, is less than 2.2×10^{-3} Δk and, therefore, not significant.

Note that the material description of the water neutron shield and the exterior moderator are identical in these evaluations addressing accident condition concerns (loss of neutron shield).

6.4.8.6 Partial Flooding Evaluation

During accident conditions, the loss of neutron shielding has the potential to increase neutronic interaction between casks in the infinite array. Significant amounts of moderator outside the FHUs, but in the flooded cask cavity, serves to isolate casks under the accident condition of loss of neutron shield. To investigate the potential impact of preferential flooding, an additional model is created. The model preferentially floods the RERTR and HTGR FHUs, with a separate interior moderator material filling the balance of the NAC-LWT cavity.

A full set of studies evaluating the reactivity changes associated with varying cavity interior, FHU, and exterior moderator densities is summarized in Tables 6.4.8-7 through 6.4.8-11. The studies indicate that the most reactive configuration is for flooding of the RERTR and HTGR enclosures (FHUs) with interior and exterior void (loss of neutron shield). This configuration produces the maximum reactivity FHUs, while maximizing interaction between the FHUs within the cask and between casks.

6.4.8.7 Single Cask Evaluation

The 10 CFR 71.55(b)(3) requires an evaluation of the NAC-LWT with the containment system fully reflected by water. The containment for the NAC-LWT is the cask inner shell. While no operating condition results in a removal of the cask outer shell and lead gamma shield, each of the partial flooding cases at four combinations of interior and exterior moderator is reevaluated by removing the lead and outer shells (including neutron shield), and reflecting the system by water at full density on the X and Y faces (the z faces are mirrored to yield an axially infinite model). The results of this analysis are shown in Table 6.4.8-12 and demonstrate that the system reactivity decreases with the removal of the lead, outer shell and neutron shield reflectors.

6.4.8.8 Damaged TRIGA Fuel Evaluation

The combined payload model with a homogenized TRIGA fuel description is used to evaluate the system reactivity in the event that both the intact and sectioned fuel elements become damaged. Models are executed by varying the volume fraction of water in the TRIGA fuel mixture from zero to unity. The maximum volume fraction is 0.6816 based on the FHU cavity volume (7140 cm^3) and the total volume of TRIGA elements (2273 cm^3), which does not consider the volume of the aluminum tubing within the FHU primary enclosure.

Based on the results summarized in Table 6.4.8-13, homogenized TRIGA elements are more reactive than intact TRIGA elements. Evaluation results documented in Table 6.4.8-13 are based

on infinite cask array models. A single cask evaluation of the maximum water volume fraction case yielded a k_{eff} of 0.38885 ± 0.00066.

6.4.8.9 Code Bias and Code Bias Uncertainty Adjustments

As shown in Section 6.4.8.1, the TRIGA elements in the RERTR enclosure are more reactive than the HTGR fuel matrix in its enclosure. Therefore, code bias and code uncertainty adjustments are based on the TRIGA fuel element critical benchmarks in Section 6.5. 3.

A calculation of k_s under normal and accident conditions can now be made based on the previous results and based on the KENO-Va validation statistics presented in Section 6.5.3. The value k_s is calculated based on the KENO-Va Monte Carlo average plus any biases and uncertainties associated with the methods and the modeling, i.e.:

$$k_s = k_{eff} + \Delta k_{Bias} + \Delta k_{BU} + 2\sigma_{MC} \leq 0.95$$

In the validation presented in Section 6.5.3, a negative bias (allowance for overprediction of k_{eff}) and a 95/95 method uncertainty of ± 0.0168 was determined. The negative bias correction is neglected. Thus, the equation for k_s becomes:

$$k_s = k_{eff} + 0.0168 + 2\sigma_{MC}$$

The k_s values for the relevant analysis are included in Tables 6.4.8-1 through Table 6.4.8-13. The maximum k_s, 0.74015, for the GA IFM shipment results from an infinite height model with an infinite number of casks.

For both normal and accident conditions, the calculated k_{eff} values, after correction for uncertainty, are well below the 0.95 limit. The analyses demonstrate that, including all calculational and mechanical uncertainties, an infinite array of NAC-LWT casks with GA IFM remains subcritical under normal and accident conditions.

Table 6.4.8-1 GA IFM Payload Evaluation Result Summary

Payload	Cavity Moderator Density [g/cm^3]	HTGR Moderator Density [g/cm^3]	RERTR Moderator Density [g/cm^3]	Exterior Moderator Density [g/cm^3]	TRIGA Pitch [cm]	TRIGA Array	$k_{eff} \pm \sigma$
Combined	0.9882	0	0.9882	0.9882	1.40	Rectangular	0.44192±0.00073
RERTR	0.9882	0	0.9882	0.9882	1.40	Rectangular	0.42870±0.00080
HTGR	0.9882	0	0.9882	0.9882	N/A	N/A	0.06611±0.00020
HTGR	0.9882	0.9882	0.9882	0.9882	N/A	N/A	0.36907±0.00053

Table 6.4.8-2 GA IFM TRIGA Rectangular Array Pitch Evaluation Result Summary

Cavity (g/cc)	HTGR (g/cc)	RERTR (g/cc)	Exterior (g/cc)	TRIGA Pitch (cm)	TRIGA Array	k_{eff}	σ	k_s	$k_{eff}+2\sigma$	Δk	$\Delta k/\sigma$
1	0	1	1	1.40	Rectangular	0.44192	0.00073	0.46018	0.44338	0.00000	0.0
1	0	1	1	1.50	Rectangular	0.45796	0.00078	0.47632	0.45952	0.01614	20.7
1	0	1	1	1.60	Rectangular	0.47647	0.00080	0.49487	0.47807	0.03469	43.4
1	0	1	1	1.65	Rectangular	0.48529	0.00079	0.50367	0.48687	0.04349	55.1

Table 6.4.8-3 GA IFM TRIGA Square Array Pitch Evaluation Result Summary

Cavity (g/cc)	HTGR (g/cc)	RERTR (g/cc)	Exterior (g/cc)	TRIGA Pitch (cm)	TRIGA Array	k_{eff}	σ	k_s	$k_{eff}+2\sigma$	Δk	$\Delta k/\sigma$
1	0	1	1	1.40	Square	0.44618	0.00073	0.46444	0.44764	0.00000	0.0
1	0	1	1	1.50	Square	0.46343	0.00080	0.48183	0.46503	0.01739	21.7
1	0	1	1	1.60	Square	0.48072	0.00078	0.49908	0.48228	0.03464	44.4
1	0	1	1	1.65	Square	0.49026	0.00078	0.50862	0.49182	0.04418	56.6
1	0	1	1	1.70	Square	0.49727	0.00077	0.51561	0.49881	0.05117	66.5
1	0	1	1	1.73	Square	0.50289	0.00079	0.52127	0.50447	0.05683	71.9

Table 6.4.8-4 GA IFM Interior Moderator Density Evaluation Result Summary

Cavity (g/cc)	HTGR (g/cc)	RERTR (g/cc)	Exterior (g/cc)	TRIGA Pitch (cm)	TRIGA Array	k_{eff}	σ	k_s	$k_{eff}+2\sigma$	Δk	$\Delta k/\sigma$
1.00	0	1.00	1	1.73	Square	0.50289	0.00079	0.52127	0.50447	0.00000	0.0
0.95	0	0.95	1	1.73	Square	0.48897	0.00077	0.50731	0.49051	-0.01396	-18.1
0.90	0	0.90	1	1.73	Square	0.47787	0.00079	0.49625	0.47945	-0.02502	-31.7
0.85	0	0.85	1	1.73	Square	0.46611	0.00076	0.48443	0.46763	-0.03684	-48.5
0.80	0	0.80	1	1.73	Square	0.45420	0.00077	0.47254	0.45574	-0.04873	-63.3
0.75	0	0.75	1	1.73	Square	0.44289	0.00073	0.46115	0.44435	-0.06012	-82.4
0.70	0	0.70	1	1.73	Square	0.42888	0.00071	0.44710	0.43030	-0.07417	-104.5
0.65	0	0.65	1	1.73	Square	0.41568	0.00073	0.43394	0.41714	-0.08733	-119.6
0.60	0	0.60	1	1.73	Square	0.40369	0.00069	0.42187	0.40507	-0.09940	-144.1
0.55	0	0.55	1	1.73	Square	0.39298	0.00069	0.41116	0.39436	-0.11011	-159.6
0.50	0	0.50	1	1.73	Square	0.38075	0.00069	0.39893	0.38213	-0.12234	-177.3
0.45	0	0.45	1	1.73	Square	0.36922	0.00069	0.38740	0.37060	-0.13387	-194.0
0.40	0	0.40	1	1.73	Square	0.35645	0.00067	0.37459	0.35779	-0.14668	-218.9
0.35	0	0.35	1	1.73	Square	0.34396	0.00064	0.36204	0.34524	-0.15923	-248.8
0.30	0	0.30	1	1.73	Square	0.33007	0.00064	0.34815	0.33135	-0.17312	-270.5
0.25	0	0.25	1	1.73	Square	0.31618	0.00059	0.33416	0.31736	-0.18711	-317.1
0.20	0	0.20	1	1.73	Square	0.29802	0.00056	0.31594	0.29914	-0.20533	-366.7
0.15	0	0.15	1	1.73	Square	0.27758	0.00057	0.29552	0.27872	-0.22575	-396.1
0.10	0	0.10	1	1.73	Square	0.24971	0.00052	0.26755	0.25075	-0.25372	-487.9
0.05	0	0.05	1	1.73	Square	0.21145	0.00048	0.22921	0.21241	-0.29206	-608.5

Table 6.4.8-5 GA IFM HTGR Matrix Moderator Density Evaluation Result Summary

Cavity (g/cc)	HTGR (g/cc)	RERTR (g/cc)	Exterior (g/cc)	TRIGA Pitch (cm)	TRIGA Array	k_{eff}	σ	k_s	$k_{eff}+2\sigma$	Δk	$\Delta k/\sigma$
1	0.00	1	1	1.73	Square	0.50289	0.00079	0.52127	0.50447	0.00000	0.0
1	0.05	1	1	1.73	Square	0.50363	0.00076	0.52195	0.50515	0.00068	0.9
1	0.10	1	1	1.73	Square	0.50425	0.00079	0.52263	0.50583	0.00136	1.7
1	0.15	1	1	1.73	Square	0.50570	0.00076	0.52402	0.50722	0.00275	3.6
1	0.20	1	1	1.73	Square	0.50755	0.00077	0.52589	0.50909	0.00462	6.0
1	0.25	1	1	1.73	Square	0.50701	0.00078	0.52537	0.50857	0.00410	5.3
1	0.30	1	1	1.73	Square	0.50888	0.00079	0.52726	0.51046	0.00599	7.6
1	0.35	1	1	1.73	Square	0.50994	0.00079	0.52832	0.51152	0.00705	8.9
1	0.40	1	1	1.73	Square	0.51168	0.00079	0.53006	0.51326	0.00879	11.1
1	0.45	1	1	1.73	Square	0.51327	0.00079	0.53165	0.51485	0.01038	13.1
1	0.50	1	1	1.73	Square	0.51492	0.00078	0.53328	0.51648	0.01201	15.4
1	0.55	1	1	1.73	Square	0.51524	0.00080	0.53364	0.51684	0.01237	15.5
1	0.60	1	1	1.73	Square	0.51628	0.00078	0.53464	0.51784	0.01337	17.1
1	0.65	1	1	1.73	Square	0.51911	0.00077	0.53745	0.52065	0.01618	21.0
1	0.70	1	1	1.73	Square	0.52034	0.00076	0.53866	0.52186	0.01739	22.9
1	0.75	1	1	1.73	Square	0.52100	0.00074	0.53928	0.52248	0.01801	24.3
1	0.80	1	1	1.73	Square	0.52193	0.00076	0.54025	0.52345	0.01898	25.0
1	0.85	1	1	1.73	Square	0.52120	0.00075	0.53950	0.52270	0.01823	24.3
1	0.90	1	1	1.73	Square	0.52407	0.00074	0.54235	0.52555	0.02108	28.5
1	0.95	1	1	1.73	Square	0.52482	0.00076	0.54314	0.52634	0.02187	28.8
1	1.00	1	1	1.73	Square	0.52764	0.00070	0.54584	0.52904	0.02457	35.1

Table 6.4.8-6 GA IFM Exterior Moderator Density Evaluation Result Summary

Cavity (g/cc)	HTGR (g/cc)	RERTR (g/cc)	Exterior (g/cc)	TRIGA Pitch (cm)	TRIGA Array	k_{eff}	σ	k_s	$k_{eff}+2\sigma$	Δk	$\Delta k/\sigma$
1	1	1	1.00	1.73	Square	0.52764	0.00070	0.54584	0.52904	0.00000	0.0
1	1	1	0.95	1.73	Square	0.52634	0.00073	0.54460	0.52780	-0.00124	-1.7
1	1	1	0.90	1.73	Square	0.52787	0.00077	0.54621	0.52941	0.00037	0.5
1	1	1	0.85	1.73	Square	0.52539	0.00073	0.54365	0.52685	-0.00219	-3.0
1	1	1	0.80	1.73	Square	0.52733	0.00075	0.54563	0.52883	-0.00021	-0.3
1	1	1	0.75	1.73	Square	0.52921	0.00079	0.54759	0.53079	0.00175	2.2
1	1	1	0.70	1.73	Square	0.52632	0.00071	0.54454	0.52774	-0.00130	-1.8
1	1	1	0.65	1.73	Square	0.52551	0.00073	0.54377	0.52697	-0.00207	-2.8
1	1	1	0.60	1.73	Square	0.52695	0.00079	0.54533	0.52853	-0.00051	-0.6
1	1	1	0.55	1.73	Square	0.52712	0.00078	0.54548	0.52868	-0.00036	-0.5
1	1	1	0.50	1.73	Square	0.52612	0.00077	0.54446	0.52766	-0.00138	-1.8
1	1	1	0.45	1.73	Square	0.52584	0.00076	0.54416	0.52736	-0.00168	-2.2
1	1	1	0.40	1.73	Square	0.52669	0.00076	0.54501	0.52821	-0.00083	-1.1
1	1	1	0.35	1.73	Square	0.52661	0.00076	0.54493	0.52813	-0.00091	-1.2
1	1	1	0.30	1.73	Square	0.52735	0.00078	0.54571	0.52891	-0.00013	-0.2
1	1	1	0.25	1.73	Square	0.52644	0.00076	0.54476	0.52796	-0.00108	-1.4
1	1	1	0.20	1.73	Square	0.52775	0.00080	0.54615	0.52935	0.00031	0.4
1	1	1	0.15	1.73	Square	0.52812	0.00075	0.54642	0.52962	0.00058	0.8
1	1	1	0.10	1.73	Square	0.52904	0.00073	0.54730	0.53050	0.00146	2.0
1	1	1	0.05	1.73	Square	0.52655	0.00072	0.54479	0.52799	-0.00105	-1.5
1	1	1	0.00	1.73	Square	0.52970	0.00073	0.54796	0.53116	0.00212	2.9

Table 6.4.8-7 GA IFM Partial Flooding Comparison Result Summary

Cavity (g/cc)	HTGR (g/cc)	RERTR (g/cc)	Exterior (g/cc)	TRIGA Pitch (cm)	TRIGA Array	k_{eff}	σ	k_s	$k_{eff}+2\sigma$	Δk	$\Delta k/\sigma$
0	1	0	0	1.73	Square	0.57362	0.00054	0.59150	0.57470	0.00000	0.0
0	1	1	0	1.73	Square	0.70197	0.00076	0.72029	0.70349	0.12879	169.5

Table 6.4.8-8 GA IFM Partial Flooding Interior Moderator Density, Void Exterior Result Summary

Cavity (g/cc)	HTGR (g/cc)	RERTR (g/cc)	Exterior (g/cc)	TRIGA Pitch (cm)	TRIGA Array	k_{eff}	σ	k_s	$k_{eff}+2\sigma$	Δk	$\Delta k/\sigma$
0.0	1	1	0	1.73	Square	0.70197	0.00076	0.72029	0.70349	0.00000	0.0
0.1	1	1	0	1.73	Square	0.63582	0.00076	0.65414	0.63734	-0.06615	-87.0
0.2	1	1	0	1.73	Square	0.59419	0.00074	0.61247	0.59567	-0.10782	-145.7
0.3	1	1	0	1.73	Square	0.57060	0.00078	0.58896	0.57216	-0.13133	-168.4
0.4	1	1	0	1.73	Square	0.55551	0.00073	0.57377	0.55697	-0.14652	-200.7
0.5	1	1	0	1.73	Square	0.54367	0.00074	0.56195	0.54515	-0.15834	-214.0
0.6	1	1	0	1.73	Square	0.53824	0.00074	0.55652	0.53972	-0.16377	-221.3
0.7	1	1	0	1.73	Square	0.53478	0.00075	0.55308	0.53628	-0.16721	-222.9
0.8	1	1	0	1.73	Square	0.53243	0.00074	0.55071	0.53391	-0.16958	-229.2
0.9	1	1	0	1.73	Square	0.53192	0.00075	0.55022	0.53342	-0.17007	-226.8
1.0	1	1	0	1.73	Square	0.52970	0.00073	0.54796	0.53116	-0.17233	-236.1

Table 6.4.8-9 GA IFM Partial Flooding Interior Moderator Density, Water Exterior Result Summary

Cavity (g/cc)	HTGR (g/cc)	RERTR (g/cc)	Exterior (g/cc)	TRIGA Pitch (cm)	TRIGA Array	k_{eff}	σ	k_s	$k_{eff}+2\sigma$	Δk	$\Delta k/\sigma$
0.0	1	1	1	1.73	Square	0.55598	0.00074	0.57426	0.55746	0.00000	0.0
0.1	1	1	1	1.73	Square	0.54649	0.00073	0.56475	0.54795	-0.00951	-13.0
0.2	1	1	1	1.73	Square	0.53804	0.00075	0.55634	0.53954	-0.01792	-23.9
0.3	1	1	1	1.73	Square	0.53458	0.00073	0.55284	0.53604	-0.02142	-29.3
0.4	1	1	1	1.73	Square	0.52971	0.00076	0.54803	0.53123	-0.02623	-34.5
0.5	1	1	1	1.73	Square	0.52610	0.00074	0.54438	0.52758	-0.02988	-40.4
0.6	1	1	1	1.73	Square	0.52725	0.00075	0.54555	0.52875	-0.02871	-38.3
0.7	1	1	1	1.73	Square	0.52668	0.00071	0.54490	0.52810	-0.02936	-41.4
0.8	1	1	1	1.73	Square	0.52630	0.00077	0.54464	0.52784	-0.02962	-38.5
0.9	1	1	1	1.73	Square	0.52711	0.00074	0.54539	0.52859	-0.02887	-39.0
1.0	1	1	1	1.73	Square	0.52764	0.00070	0.54584	0.52904	-0.02842	-40.6

Table 6.4.8-10 GA IFM Partial Flooding Exterior Moderator Density, Void Interior Result Summary

Cavity (g/cc)	HTGR (g/cc)	RERTR (g/cc)	Exterior (g/cc)	TRIGA Pitch (cm)	TRIGA Array	k_{eff}	σ	k_s	$k_{eff}+2\sigma$	Δk	$\Delta k/\sigma$
0	1	1	0.0	1.73	Square	0.70197	0.00076	0.72029	0.70349	0.00000	0.0
0	1	1	0.1	1.73	Square	0.56743	0.00075	0.58573	0.56893	-0.13456	-179.4
0	1	1	0.2	1.73	Square	0.55761	0.00075	0.57591	0.55911	-0.14438	-192.5
0	1	1	0.3	1.73	Square	0.55699	0.00076	0.57531	0.55851	-0.14498	-190.8
0	1	1	0.4	1.73	Square	0.55603	0.00072	0.57427	0.55747	-0.14602	-202.8
0	1	1	0.5	1.73	Square	0.55553	0.00071	0.57375	0.55695	-0.14654	-206.4
0	1	1	0.6	1.73	Square	0.55550	0.00073	0.57376	0.55696	-0.14653	-200.7
0	1	1	0.7	1.73	Square	0.55648	0.00075	0.57478	0.55798	-0.14551	-194.0
0	1	1	0.8	1.73	Square	0.55610	0.00075	0.57440	0.55760	-0.14589	-194.5
0	1	1	0.9	1.73	Square	0.55524	0.00075	0.57354	0.55674	-0.14675	-195.7
0	1	1	1.0	1.73	Square	0.55598	0.00074	0.57426	0.55746	-0.14603	-197.3

Table 6.4.8-11 GA IFM Partial Flooding Exterior Moderator Density, Water Interior Result Summary

Cavity (g/cc)	HTGR (g/cc)	RERTR (g/cc)	Exterior (g/cc)	TRIGA Pitch (cm)	TRIGA Array	k_{eff}	σ	k_s	$k_{eff}+2\sigma$	Δk	$\Delta k/\sigma$
1	1	1	0.0	1.73	Square	0.52970	0.00073	0.54796	0.53116	0.00000	0.0
1	1	1	0.1	1.73	Square	0.52904	0.00073	0.54730	0.53050	-0.00066	-0.9
1	1	1	0.2	1.73	Square	0.52775	0.00080	0.54615	0.52935	-0.00181	-2.3
1	1	1	0.3	1.73	Square	0.52735	0.00078	0.54571	0.52891	-0.00225	-2.9
1	1	1	0.4	1.73	Square	0.52669	0.00076	0.54501	0.52821	-0.00295	-3.9
1	1	1	0.5	1.73	Square	0.52612	0.00077	0.54446	0.52766	-0.00350	-4.5
1	1	1	0.6	1.73	Square	0.52695	0.00079	0.54533	0.52853	-0.00263	-3.3
1	1	1	0.7	1.73	Square	0.52632	0.00071	0.54454	0.52774	-0.00342	-4.8
1	1	1	0.8	1.73	Square	0.52733	0.00075	0.54563	0.52883	-0.00233	-3.1
1	1	1	0.9	1.73	Square	0.52787	0.00077	0.54621	0.52941	-0.00175	-2.3
1	1	1	1.0	1.73	Square	0.52764	0.00070	0.54584	0.52904	-0.00212	-3.0

Table 6.4.8-12 GA IFM Partial Flooding Single Cask Result Comparison

Cavity (g/cc)	HTGR (g/cc)	RERTR (g/cc)	Exterior (g/cc)	TRIGA Pitch (cm)	TRIGA Array	k_{eff}	σ	k_s	$k_{eff}+2\sigma$	Δk	$\Delta k/\sigma$
0	1	1	0	1.73	Square	0.70197	0.00076	0.72029	0.70349	0.00000	0.0
0	1	1	0	1.73	Square	0.42657	0.00066	0.44469	0.42789	-0.27560	-417.6
1	1	1	0	1.73	Square	0.52970	0.00073	0.54796	0.53116	0.00000	0.0
1	1	1	0	1.73	Square	0.52108	0.00074	0.53936	0.52256	-0.00860	-11.6
0	1	1	1	1.73	Square	0.55598	0.00074	0.57426	0.55746	0.00000	0.0
0	1	1	1	1.73	Square	0.45370	0.00074	0.47198	0.45518	-0.10228	-138.2
1	1	1	1	1.73	Square	0.52764	0.00070	0.54584	0.52904	0.00000	0.0
1	1	1	1	1.73	Square	0.52056	0.00076	0.53888	0.52208	-0.00696	-9.2

Table 6.4.8-13 GA IFM Damaged TRIGA Fuel Result Summary

Cavity (g/cc)	HTGR (g/cc)	Exterior (g/cc)	TRIGA Config.	TRIGA H_2O (g/cc)	k_{eff}	σ	k_s	$k_{eff}+2\sigma$	Δk	$\Delta k/\sigma$
0	1	0	Homog.	0.0001	0.53943	0.00055	0.55733	0.54053	-0.18282	-332.4
0	1	0	Homog.	0.1000	0.55711	0.00055	0.57501	0.55821	-0.16514	-300.3
0	1	0	Homog.	0.2000	0.57987	0.00054	0.59775	0.58095	-0.14240	-263.7
0	1	0	Homog.	0.3000	0.60672	0.00062	0.62476	0.60796	-0.11539	-186.1
0	1	0	Homog.	0.4000	0.63609	0.00062	0.65413	0.63733	-0.08602	-138.7
0	1	0	Homog.	0.5000	0.66661	0.00064	0.68469	0.66789	-0.05546	-86.7
0	1	0	Homog.	0.6000	0.69621	0.00067	0.71435	0.69755	-0.02580	-38.5
0	1	0	Homog.	0.6816	0.72199	0.00068	0.74015	0.72335	0.00000	0.0
0	1	0	Homog.	0.7000	0.72738	0.00069	0.74556	0.72876	0.00541	7.8
0	1	0	Homog.	0.8000	0.75724	0.00070	0.77544	0.75864	0.03529	50.4
0	1	0	Homog.	0.9000	0.78650	0.00071	0.80472	0.78792	0.06457	90.9
0	1	0	Homog.	1.0000	0.81239	0.00073	0.83065	0.81385	0.09050	124.0

6.4.9 PULSTAR Fuel Contents

This section presents the criticality analyses for the NAC-LWT cask with PULSTAR fuel contents. Criticality analyses are performed to satisfy the criticality safety requirements of 10 CFR Parts 71.55 and 71.59, as well as IAEA TS-R-1. All criticality evaluations performed herein use an axially finite cask model. An analysis of the NAC-LWT with each of the four postulated basket loadings shows that damaged PULSTAR fuel elements in a can are most reactive.

The maximum reactivity is based on the following model characteristics.

- 14 cans (25 elements per can) in the top and base modules
- 14 intact assemblies in the two intermediate modules
- Flooded cans
- Void cask cavity and exterior
- Loss of neutron shield

A single cask evaluation is also performed to comply with 10 CFR 71.55(b)(3). The analyses demonstrate that, including all calculational and mechanical uncertainties, the NAC-LWT remains subcritical under normal and accident conditions.

6.4.9.1 Intact Assembly Payload

An intact PULSTAR fuel assembly is placed in each of the 28 cells in the 28 MTR basket assembly. Results of the mechanical perturbation, axial and radial shift are shown in Table 6.4.9-1 through Table 6.4.9-3. Optimum moderator studies for the cask are shown in Figure 6.4.9-2. All intact fuel assembly runs are based on an infinite cask array model.

From a base model, which has the PULSTAR fuel assemblies centered in the module cell and touching the module base plates, various component shift and module plate thickness combinations are evaluated. Assembly shift results, shown in Table 6.4.9-1, indicate that a basket assembly with PULSTAR fuel assemblies in the "Xlong" alignment and axially alternated represents the most reactive scenario for intact fuel assemblies. The "modified" Ylong configuration represents a mix of rotations and is shown in Figure 6.4.9-1. Considering assembly shifts the maximum k_{eff} is 0.80517 ± 0.00083.

Mechanical perturbation results from a study of plate thickness and cell opening size are shown in Table 6.4.9-2. This study indicates that a maximum module cell width produces a slight increase in reactivity for a maximum k_{eff} of 0.80929 ± 0.00084.

Previous evaluations documented in this section are based on a flooded pellet to clad gap and fuel parameters producing the maximum lattice H/U ratio. Minimum H/U ratio and dry gap cases are run to verify that the lattice is under moderated and that appropriate fuel parameters were chosen for the base analysis. The results of this analysis are listed in Table 6.4.9-3 and clearly demonstrate that the element lattice is under moderated and that the flooded pellet to clad gap and maximum H/U lattice model options are conservative for the analysis.

Graphical results of the optimum moderator density studies are shown in Figure 6.4.9-2. This study further confirms that the assembly is under moderated and that maximum system reactivity is obtained from a flooded cask cavity with a dry cask exterior and neutron shield.

The CSI for intact fuel assemblies is 0 as an infinite array of cask is modeled and maximum reactivity is well below the 0.95 licensing limit.

6.4.9.2 Intact Elements – Fuel Rod Insert

A single KENO-Va case is executed to demonstrate that a payload of 448 PULSTAR fuel elements (16 elements per 4×4 insert; 28 MTR basket cells) is significantly less reactive than the assembly model containing 28 intact assemblies (700 elements).

For a model with the insert radially centered within the cell, alternating axial shifting, full density water in the cavity, and a void exterior, the calculated k_{eff} is 0.70076 ± 0.00079. This reactivity is substantially lower than that of the intact assemblies. Therefore no further analysis is performed with the rod insert configuration.

6.4.9.3 Canned Elements

Intact or damaged (failed) PULSTAR fuel elements and nonfuel components of fuel assemblies may be placed into either of the PULSTAR cans. Each configuration is individually evaluated.

Intact Fuel Elements

Intact fuel element models place 25 rods into the can in a 0.66-inch square pitch. This pitch is the maximum allowed by the modeled can cavity width and is conservative as the elements were significantly under moderated at their smaller "in assembly" pitch. A can is placed into each of the 28 MTR basket assembly cells in an alternate axial shift configuration with the cask and canister cavity flooded. The alternate shift configuration was determined to be most reactive in the intact assembly analysis. For an infinite array of casks under accident condition (void exterior and neutron shield) a k_{eff} of 0.89919 ± 0.00083 is calculated. Results in Table 6.4.9-4 indicate that the preferential flooding of the canister cavity with a void cask cavity for the same physical configuration results in k_{eff} of 0.98516 ± 0.00076. Additional evaluations and limitations, are therefore, required to document an acceptable system configuration. KENO models with cans restricted to the top and base modules and intact fuel assemblies in the remaining two modules reduces system reactivity significantly as documented in Table 6.4.9-4. Without the neutron shield (accident conditions) there is substantial neutronic coupling between casks in an array and limiting the number of casks produces a significant additional reactivity reduction. For the mixed loaded three-cask array, the calculated k_{eff} is 0.84910 ± 0.00079. A limit of a three-cask array produces a CSI of 33.4 under the accident conditions modeled. System reactivity for a normal condition infinite array of casks loaded with damaged fuel cans is low, $k_{eff} < 0.2$. The normal condition based CSI is therefore 0.

Damaged (Failed) Elements

Damaged elements are modeled as a homogenized fuel and water mixture within the can cavity. Analysis trends for the homogenized contents are similar to those for the intact elements in a can. Bias and uncertainty adjusted system reactivity of the damaged fuel elements is higher than allowed for a full cask load (28 cans), but restricting the cask array under accident condition to three casks and limiting each cask's contents to 14 damaged fuel cans, seven in each of the top and base basket modules, and intact fuel assemblies or rod holders in the intermediate basket modules, produces acceptable reactivities as shown in Table 6.4.9-5. For the 3-cask array, the maximum calculated k_{eff} is 0.86961 ± 0.00081.

6.4.9.4 Single Cask Evaluation

The 10 CFR 71.55(b)(3) requires an evaluation of the NAC-LWT with the containment system fully reflected by water. The containment for the NAC-LWT is the cask inner shell. While no operating condition results in a removal of the cask outer shell and lead gamma shield, each of the partial flooding cases at four combinations of interior and exterior moderator is reevaluated by removing the lead and outer shells (including neutron shield), and reflecting the system by water at full density on the X, Y, and Z faces. Using the maximum reactivity model from Section 6.4.9.3, the calculated k_{eff} is 0.72674 ± 0.00087.

6.4.9.5 Code Bias and Code Bias Uncertainty Adjustments

PULSTAR fuel elements are similar to LWR fuel rods with a shorter active fuel length and smaller assembly array. While the enrichment for PULSTAR fuel is outside the enrichment range validated for LWR fuel, Figure 6.5.1-2 shows no statistical trend in k_{eff} versus enrichment. Further, any trend that may be postulated from the critical benchmarks indicates a higher predicted k_{eff} value at higher enrichments. Therefore, code bias and code uncertainty adjustments are based on the LWR fuel assembly critical benchmarks in Section 6.5.1.

A calculation of k_s under normal and accident conditions can now be made based on the previous results and based on the KENO-Va validation statistics presented in Section 6.5.1. The value k_s is calculated based on the KENO-Va Monte Carlo average plus any biases and uncertainties associated with the methods and the modeling, i.e.:

$$k_s = k_{eff} + \Delta k_{Bias} + \Delta k_{BU} + 2\sigma_{MC} \leq 0.95$$

In the validation presented in Section 6.5.1, a bias of ± 0.0052 and a 95/95 method uncertainty of ± 0.0087 were determined. Thus, the equation for k_s becomes as follows.

$$k_s = k_{eff} + 0.0139 + 2\sigma_{MC}$$

The k_s values for each evaluated payload are summarized in Table 6.4.9-6. The maximum k_s, 0.88513, results from a mixed loading of intact assemblies and canned elements.

For both normal and accident conditions, the calculated k_{eff} values, after correction for uncertainty, are well below the 0.95 limit. The analyses demonstrate that, including all calculational and mechanical uncertainties, an array of NAC-LWT casks with PULSTAR fuel remains subcritical under normal and accident conditions.

6.4.9.7 Allowable Cask Loading

Based on the results of the previous sections, the following cask loadings are permissible. For intact elements, any combination of assemblies and 4×4 rod inserts may be loaded into any module cell. Up to 14 damaged fuel cans each containing up to 25 PULSTAR fuel elements may be loaded in the top and base modules only; module cells loaded without cans may contain any combination of intact assemblies or 4×4 rod inserts. Each can is allowed the equivalent fissile material content of 25 fuel elements in either intact or damaged (failed) form. Damaged fuel may include fuel debris.

Figure 6.4.9-1 PICTURE Schematic of Modified PULSTAR Fuel Assembly Alignment Configuration

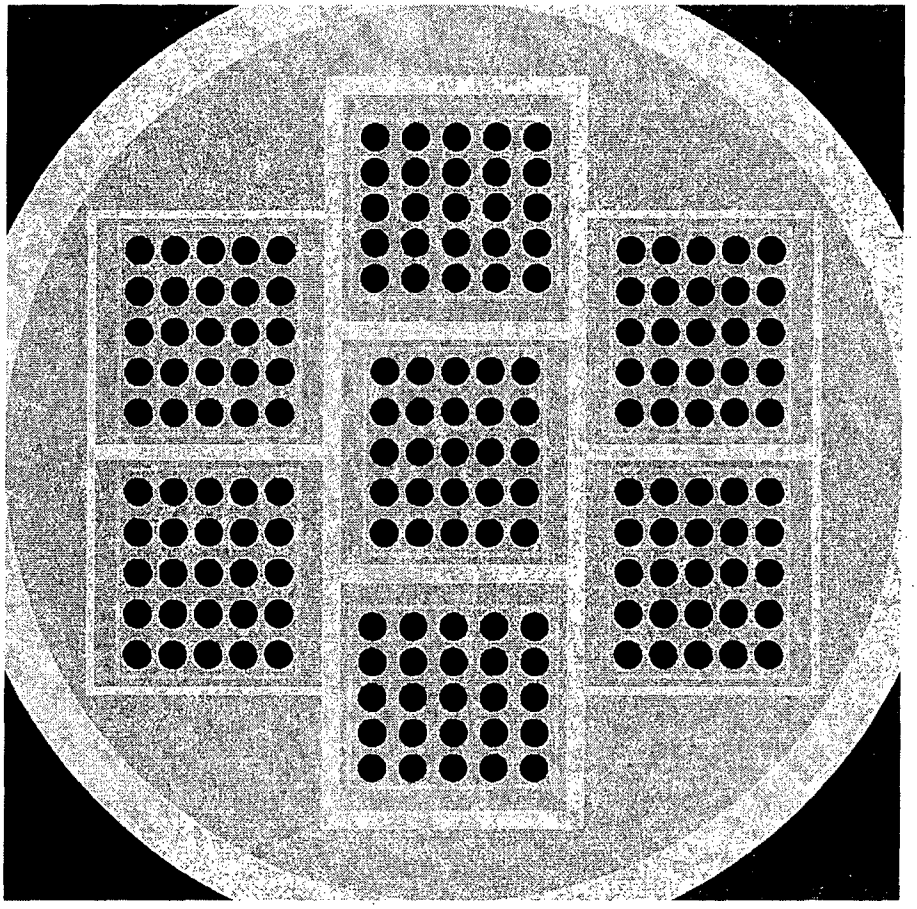

Figure 6.4.9-2 PULSTAR Intact Assembly Model Moderator Density Study Graphical Results

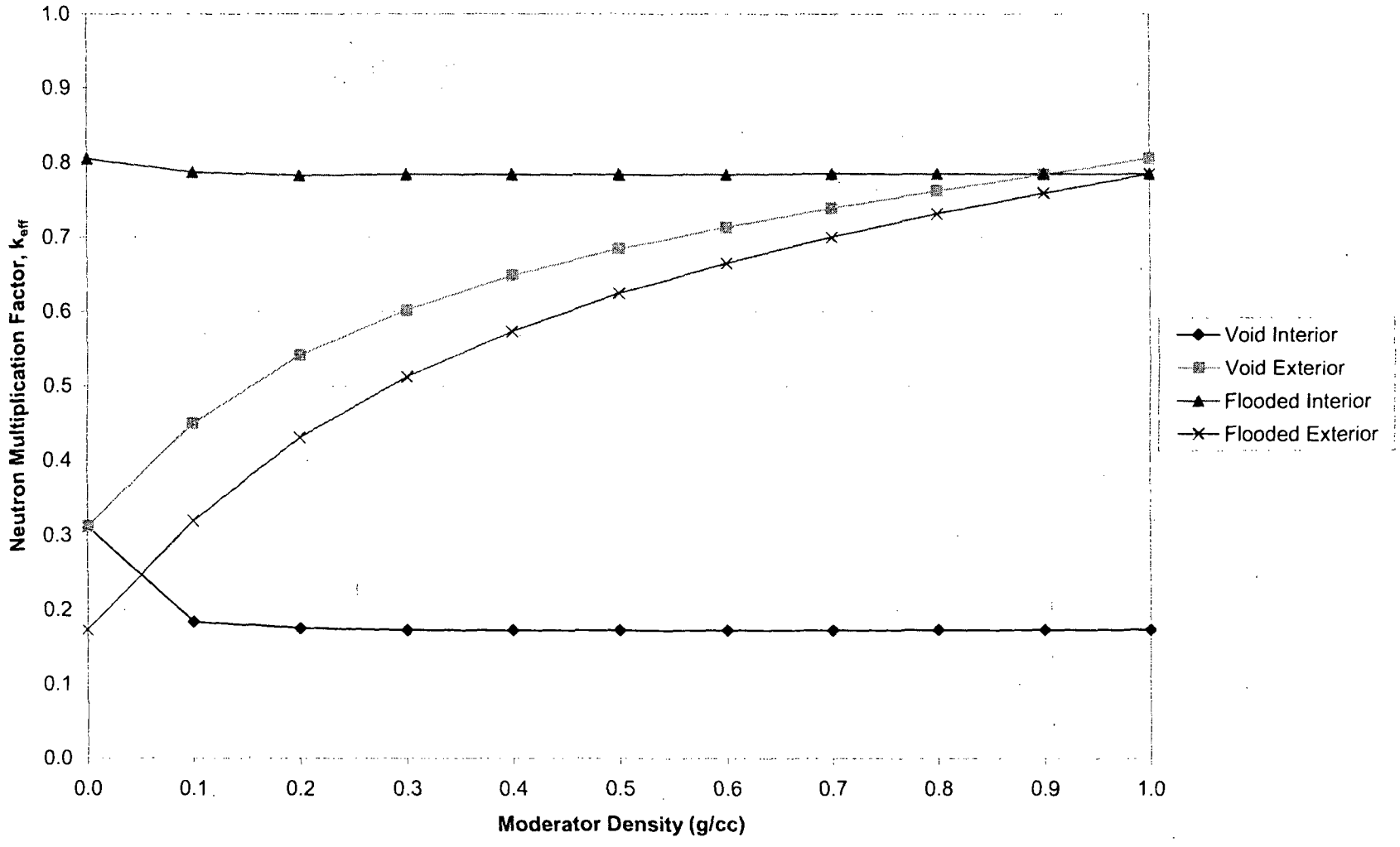

Table 6.4.9-1 PULSTAR Intact Assembly Shift Results

Alignment	Radial Shift	Axial Shift	k_{eff}	σ	$k_{eff}+2\sigma$	Δk	Δk/σ
Ylong	Centered	Centered	0.78916	0.00081	0.79078	--	--
Ylong	In	Centered	0.77268	0.00085	0.77438	-0.01648	-14.0
Ylong	Out	Centered	0.78773	0.00081	0.78935	-0.00143	-1.2
Xlong	Centered	Centered	0.79134	0.00083	0.79300	--	--
Xlong	In	Centered	0.77006	0.00080	0.77166	-0.02128	-18.5
Xlong	Out	Centered	0.78979	0.00080	0.79139	-0.00155	-1.3
Ylong	Centered	Alternating	0.80182	0.00084	0.80350	--	--
Ylong	In	Alternating	0.78767	0.00081	0.78929	-0.01415	-12.1
Ylong	Out	Alternating	0.80176	0.00081	0.80338	-0.00006	-0.1
Xlong	Centered	Alternating	0.80517	0.00083	0.80683	--	--
Xlong	In	Alternating	0.77968	0.00083	0.78134	-0.02549	-21.7
Xlong	Out	Alternating	0.80522	0.00080	0.80682	0.00005	0.0
Mod. Ylong	Centered	Alternating	0.80348	0.00087	0.80522	--	--
Mod. Ylong	In	Alternating	0.78247	0.00082	0.78411	-0.02101	-17.6
Mod. Ylong	Out	Alternating	0.80427	0.00081	0.80589	0.00079	0.7

Table 6.4.9-2 PULSTAR Intact Assembly Mechanical Perturbation Results

Alignment	Radial Shift	Axial Shift	Basket Cell Opening	Basket Plate Thickness	k_{eff}	σ	$k_{eff}+2\sigma$	Δk	Δk/σ
Xlong	Centered	Alternating	Min	Min	0.80517	0.00083	0.80683	--	--
Xlong	Centered	Alternating	Nominal	Nominal	0.80202	0.00084	0.80370	-0.00315	-2.7
Xlong	Centered	Alternating	Max	Max	0.78640	0.00081	0.78802	-0.01877	-16.2
Xlong	Centered	Alternating	Max	Min	0.80929	0.00084	0.81097	--	--
Xlong	In	Alternating	Max	Min	0.78826	0.00082	0.78990	-0.01691	-14.5
Xlong	Out	Alternating	Max	Min	0.80056	0.00081	0.80218	-0.00461	-4.0

Table 6.4.9-3 PULSTAR Intact Assembly Lattice Moderator Ratio Results

Alignment	Radial Shift	Axial Shift	Basket	Lattice H/U Ratio	Pellet to Clad Gap (g/cc)	Interior (g/cc)	Exterior (g/cc)	k_{eff}	σ	$k_{eff}+2\sigma$	Δk	Δk/σ
Xlong	Centered	Alternating	Min	Max	1	1	0	0.80517	0.00083	0.80683	--	--
Xlong	Centered	Alternating	Min	Max	1	1	0	0.79497	0.00080	0.79657	-0.01020	-8.8
Xlong	Centered	Alternating	Min	Max	1	1	0	0.80517	0.00083	0.80683	--	--
Xlong	Centered	Alternating	Min	Min	0	1	0	0.79541	0.00080	0.79701	-0.00976	-8.5

Table 6.4.9-4 PULSTAR Canned Intact Element Results

Cask Array	# Cans per Cask	Assembly Alignment	Interior (g/cc)	Exterior (g/cc)	Can (g/cc)	k_{eff}	σ	$k_{eff}+2\sigma$	Δk	Δk/σ
Infinite	28	--	1	0	1	0.89919	0.00083	0.90085	--	--
Infinite	28	--	0	0	1	0.98516	0.00076	0.98668	0.08597	76.4
Infinite	28	--	1	0	0	0.52383	0.00066	0.52515	-0.46133	-458.3
Infinite	14	Xlong	0	0	1	0.92654	0.00079	0.92812	--	--
Single	14	Xlong	0	0	1	0.84286	0.00083	0.84452	-0.08368	-73.0
3 Casks	14	Xlong	0	0	1	0.84910	0.00079	0.85068	-0.07744	-69.3
Infinite; Water Neutron Shield	14	Xlong	0	0	0	0.17042	0.00023	0.17088	-0.75612	-919.0

Table 6.4.9-5 PULSTAR Canned Homogenized Element Results

Cask Array	# Cans per Cask	Assembly Alignment	Interior (g/cc)	Exterior (g/cc)	Can (g/cc)	k_{eff}	σ	$k_{eff}+2\sigma$	Δk	Δk/σ
Infinite	28	--	1	0	1	0.92819	0.00079	0.92977	--	--
Infinite	28	--	0	0	1	1.01473	0.00075	1.01623	0.08654	79.4
Infinite	28	--	1	0	0	0.52684	0.00067	0.52818	-0.48789	-485.1
Infinite	14	Xlong	0	0	1	0.94917	0.00074	0.95065	--	--
Single	14	Xlong	0	0	1	0.86031	0.00081	0.86193	-0.08886	-81.0
3 Casks	14	Xlong	0	0	1	0.86961	0.00081	0.87123	-0.07956	-72.5
Infinite; Water Neutron Shield	14	Xlong	0	0	0	0.16471	0.00023	0.16517	-0.78446	-1012.3

Table 6.4.9-6 PULSTAR Maximum Reactivity Summary

Configuration	Cask Array	$k_{eff} + 2\sigma$	k_s	CSI
28 Intact Assemblies	Infinite	0.81097	0.82487	0
28 16-Element Fuel Rod Inserts	Infinite	0.70234	0.71624	0
14 Intact Assemblies & 14 Cans w/Intact Elements	3	0.85068	0.86458	33.4
14 Intact Assemblies & 14 Cans w/Homogenized Elements	3	0.87123	0.88513	33.4

6.4.10 ANSTO Basket Payloads

This section presents the criticality analyses for the NAC-LWT cask with the spiral fuel assemblies and MOATA plate bundles in the ANSTO basket configuration. This evaluation meets the criticality safety requirements of 10 CFR Parts 71.55 and 71.59, as well as IAEA Transportation Safety Standards (TS-R-1). In this analysis, the bounding assembly characteristics are determined and infinite arrays of NAC-LWT casks are studied to determine bounding basket configurations for criticality under normal and accident conditions. Moderator density in the cavity, neutron shield tank and outside is varied to determine the maximum k_{eff}. The analyses demonstrate that, including all calculational and mechanical uncertainties, the NAC-LWT remains subcritical under normal and accident conditions for spiral fuel assemblies and MOATA plate bundles in the ANSTO basket configuration.

6.4.10.1 Spiral Fuel Assemblies

Initial evaluations document the reactivity of the fuel assembly in a nominal configuration basket. The cask model is set to accident conditions with neutron shield and cask exterior material voided. This base model is then modified to evaluate basket configuration and fuel material changes individually or in combination. For all evaluations, the ^{235}U enrichment percentage is set to its maximum value, as increased ^{235}U weight percent minimizes parasitic absorption in ^{238}U.

Reactivity results for the mechanical perturbation studies of the system and tolerances applied to the fuel material definition are included in Table 6.4.10-1. Manufacturing tolerance studies of the basket are listed in Table 6.4.10-2. Basket tolerance studies, as well as fuel studies shown later, rely on a base model containing maximum tolerance fissile material mass and uranium weight percent in the fuel meat.

The majority of evaluations presented in this section are based on a volume-conserving model with three fuel rings. This model requires a significant decrease in core thickness to conserve fuel meat volume, with only a minimal change to the plate thickness. As shown in Table 6.4.10-1, the model based on the original fuel plate dimension has a slightly higher reactivity. The increased reactivity in the plate-based model is the result of a smaller clad thickness than the one applied to the volume-conserving model. Evaluations performed later in this section reduce the clad to a minimum (0.01 cm) and, therefore, bound the as-manufactured plate configuration. Further calculations are, therefore, all based on a volume-conserving base model.

Maximum reactivity material, basket tolerances, and mechanical perturbation configurations are listed in the following bullets.

- Radial shift in – close approach active fuel
  There is no statistically significant difference between a shifted middle fuel element and a centered middle fuel element. The centered middle fuel element is chosen to continue the remaining evaluations.
- Axial alternating shift – close approach active fuel

- Maximum ^{235}U mass and maximum uranium weight percentage

  Within the range of uranium weight percentages evaluated, there is no effect on system reactivity. As documented in the MTR evaluation set, a large increase in uranium percentage (well beyond reasonable manufacturing limits) will increase reactivity. Therefore, maximum uranium percentage is retained for the remaining reactivity evaluations.

- Minimum fuel tube thickness
  For the tube specified, minimum tube thickness equals nominal thickness (tolerance is defined as -0%, +22%).

- No significant effect associated with other basket tolerances
  As reduced basket bottom plate and tube height removes absorber material from the system, the remaining reactivity evaluations set these variables to minimum.
  Fuel tube OD is set to maximum as it shows a slight, if not significant, reactivity increase. Increasing tube OD trades off raised moderation against increased absorber in the larger tube.

Next, fuel assembly dimensional effects are evaluated. The results of the fuel tolerance studies are documented in Table 6.4.10-3. The maximum system reactivity fuel configuration is itemized in the following bullets.

- Minimum plate thickness – increases moderator available between inner and outer assembly sleeves

- Minimum clad thickness
  Maximum reactivity obtained from a case where clad thickness is conservatively set to a minimum of 0.01 cm.

- Minimum active fuel height – reduces the space between fissile material in the alternating shifted model

- Minimum element height – reduces the space between fissile material in the alternating shifted model
  Set to active fuel height to remove variable as a potential licensing limit.

- Minimum sleeve (shell dimensions) – conservatively set to 0.01 cm thick
  Provides additional moderation in the system.

- Maximum plate pitch
  Plates were modeled as a set of three cylinders at various pitches. Maximum reactivity is obtained from a system with the middle cylinder centered between inner and outer aluminum assembly shells (sleeves) and the remaining cylinders pushed away from the center. This significantly increases the pitch between fuel materials above the 10 plate as-built assembly. Inner and outer sleeve (shell) dimensions were conservatively set to a thickness of 0.01 cm. This was done to increase volume inside the annular region, maximizing the volume available for fuel and moderator.

Cask interior and exterior moderator density variation studies are included in Table 6.4.10-4. Moderator density variations are performed on the most-reactive basket and cask configuration under the accident condition (i.e., loss of neutron shield integrity). These studies demonstrate that for a fully moderated cask interior, any increase in cask exterior moderator density reduces reactivity by decoupling the casks in the array. This data is consistent with the lower reactivity obtained from the normal condition case, where the cask water neutron shield isolates casks in the infinite array. The reactivity curve for modified interior density demonstrates that within the statistical uncertainty of the evaluation, a fully moderated cask interior represents a bounding condition. No significant variations in reactivity occur for moderator densities above 0.9 g/cm^3. A plot of the interior density study is shown in Figure 6.4.10-1.

Results for a nominal condition infinite cask array, worst-case configuration accident condition (voided neutron shield) and normal conditions of operations (filled neutron shield) arrays, and for a single cask with a fully reflected containment boundary are included in Table 6.4.10-5. Maximum bias adjusted system reactivity is 0.746, well below the 0.95 safety limit for the system. As an infinite array of casks is subcritical under both normal and accident conditions, the criticality safety index (CSI) is 0.

The reactivity evaluation of the NAC-LWT cask containing up to 42 spiral fuel assemblies (elements), demonstrates that subcritical margin ($k_s \leq 0.95$) can be maintained under the following conditions:

Parameter	Value
Number of Fuel Plates	10
Plate Thickness	≥ 0.124 cm
Active Fuel Height	≥ 59.075 cm
^{235}U Content per Element	≤160
Enrichment wt % ^{235}U	≤ 85

6.4.10.2 MOATA Plate Bundles

Initial evaluations document the reactivity of the plate bundle in a nominal configuration basket. The cask model is set to accident conditions with neutron shield and cask exterior material voided. This base model is then modified to evaluate basket configuration and fuel material changes individually or in combination. Results of these evaluations are documented in Table 6.4.10-6 and Table 6.4.10-7. Basket tolerance studies, as well as fuel studies shown later, rely on a base model containing maximum tolerance fissile material mass and uranium weight percent in the fuel meat. For all evaluations, the ^{235}U enrichment percentage is set to its maximum value as increased ^{235}U weight percent minimizes parasitic absorption in ^{238}U.

Maximum reactivity material, basket tolerances, and mechanical perturbation configurations are listed in the following bullets.

- Radial shift in – close approach active fuel
  No statistically significant difference between shifted middle fuel element and a centered middle fuel element. The centered middle fuel element is chosen to continue the remaining evaluations.
- Axial alternating shift – close approach active fuel
- Maximum ^{235}U mass and maximum uranium weight percentage
- Minimum fuel tube thickness
  For the tube specified, minimum tube thickness equals nominal thickness (tolerance is defined as -0%, +22%).
- No significant effect associated with other basket tolerances
  As reduced basket bottom plate and tube height removes absorber material from the system, the remaining reactivity evaluations set these variables to minimum.
  Fuel tube OD is retained at nominal as there is no significant effect on system reactivity for this variable, and offsetting neutronic effects occur for a change in tube size (e.g., increasing OD increases parasitic absorber and separates fissile material but provides additional moderator in the fuel region).

Next, fuel assembly dimensional and material effects are evaluated. The results of the fuel tolerance studies are documented in Table 6.4.10-8. Maximum system reactivity fuel configuration is itemized in the following bullets.

- Maximum active fuel width
  The tolerance applied to the active fuel width is one-half the distance between active fuel width and plate width. Applying this tolerance (0.3175 cm for the nominal plate width and 0.3366 cm for the maximum tolerance plate width) significantly increases system reactivity. Maximum allowed active fuel width by this analysis is 7.32 cm (conservatively rounded down from the 7.3266 cm evaluated).
- Maximum plate width
  Plate width variation taken independently has no effect on system reactivity. Analysis tied plate width to active fuel width, as no tolerance on the actual fuel width was available. Increasing plate width thereby increased the maximum active fuel width, which was shown to be bounding.
- Nominal plate thickness
  Plate bundle moderator to fuel ration (H/U) is controlled by the plate spacer thickness not plate thickness. Therefore, there is no significant effect of plate thickness on the bundle reactivity.
- Minimum clad thickness
  Maximum reactivity obtained from a case where clad thickness is conservatively set to a minimum of 0.01 cm.
- Nominal active fuel height
  Contrary to the spiral fuel and DIDO evaluation set, no significant effect of active fuel height was observed in the calculations.
- Minimum element height – reduces the space between fissile materials in the alternating shifted model
  Set to active fuel height to remove variable as a potential licensing limit. Note that the end-fitting structure of the plate bundle will assure significant separation between active fuel regions.
- Maximum plate spacer
  A conservative maximum spacer of 0.18 cm thickness was evaluated and shown to be bounding.
- Replacing aluminum side plates by water
  Provides additional moderation in the system.

Cask interior and exterior moderator density variation studies are included in Table 6.4.10-9 These studies demonstrate that for a fully moderated cask interior, any increase in cask exterior density reduces reactivity by decoupling the casks in the array. This data is consistent for reduced reactivity obtained from the normal condition case where the cask water neutron shield

isolates casks in the infinite array modeled. The reactivity curve for modified interior density demonstrates that within the statistical uncertainty of the evaluation, a fully moderated cask interior represents a bounding condition. No significant variations in reactivity occur for moderator densities above 0.95 g/cm^3. A plot of the interior density study is shown in Figure 6.4.10-2.

Results for a nominal condition infinite cask array, worst-case configuration accident condition (voided neutron shield) and normal conditions of operation (filled neutron shield) arrays, and for a single cask with a fully reflected containment boundary are included in Table 6.4.10-10. Maximum bias adjusted system reactivity is 0.763, well below the 0.95 safety limit for the system. As an infinite array of casks is subcritical under both normal and accident conditions, the criticality safety index (CSI) is 0.

The reactivity evaluation of the NAC-LWT cask containing up to 42 MOATA plate bundles demonstrates that subcritical margin ($k_s \leq 0.95$) can be maintained under the following conditions.

Parameter	MOATA Plate Bundle
Max. Number of Fuel Plates	14
Spacer Thickness	≤ 0.18 cm
Active Fuel Width	≤ 7.32 cm
^{235}U Content per Plate	≤22.3
Enrichment wt % ^{235}U	≤ 92

6.4.10.3 Mixed Basket Loading – Spiral Assemblies Basket and Plate Bundle Basket

The NAC-LWT may transport a combination of spiral elements and plate bundle elements. Given the low, and similar, reactivity of each payload, the combination of payloads is not expected to increase reactivity. A combination of three baskets of spiral elements and three baskets of plate bundles is evaluated to support the bounding statement. Casks are evaluated once with the top three baskets loaded with plate bundles and the bottom three baskets loaded with spiral elements, and once with an alternating spiral elements and plate bundles set. As shown in the following list, there is no increase in reactivity associated with mixed loading of plate bundles and spiral elements.

# Casks	Condition	Description	k_{eff}	σ	$k_{eff}+2\sigma$
Infinite Array	Accident	Nominal case of MOATA plate bundle load	0.68207	0.00078	0.68363
Infinite Array	Accident	Nominal case of spiral fuel	0.65957	0.00066	0.66089
Infinite Array	Accident	Alternating MOATA and spiral fuel load	0.67249	0.00068	0.67385
Infinite Array	Accident	Stack of 3 MOATA baskets and 3 spiral baskets	0.67403	0.00069	0.67541

Figure 6.4.10-1 Spiral Fuel - Moderator Density Plot

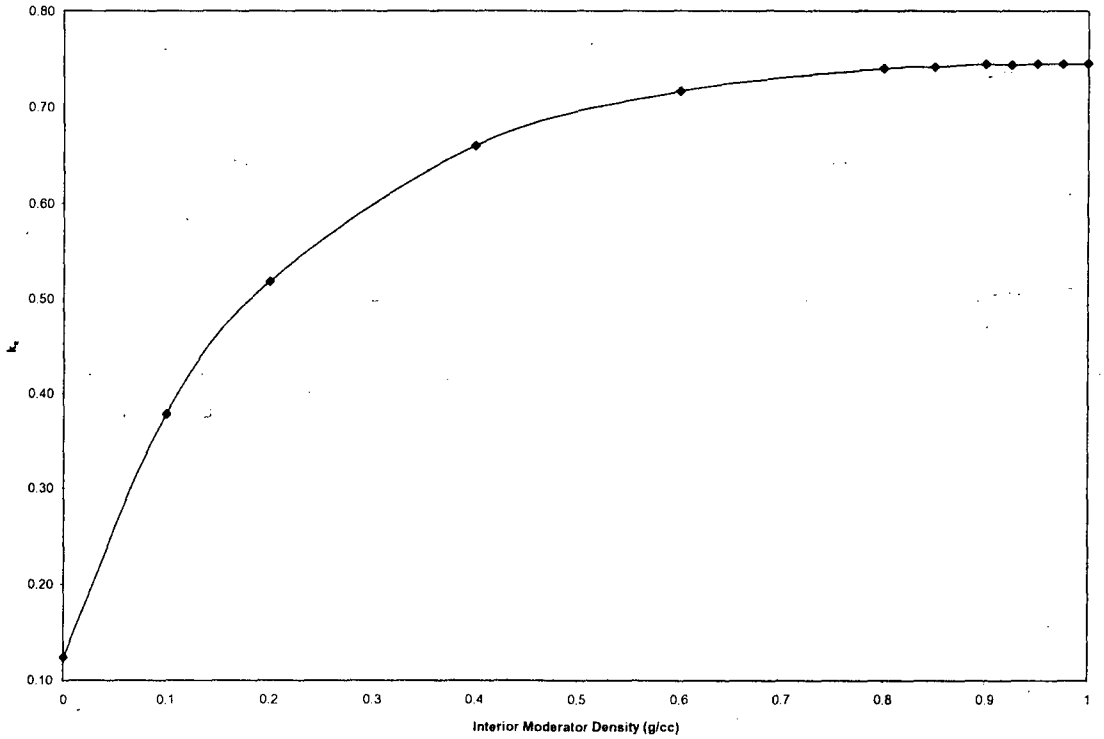

Figure 6.4.10-2 MOATA Plate Bundle -Moderator Density Plot

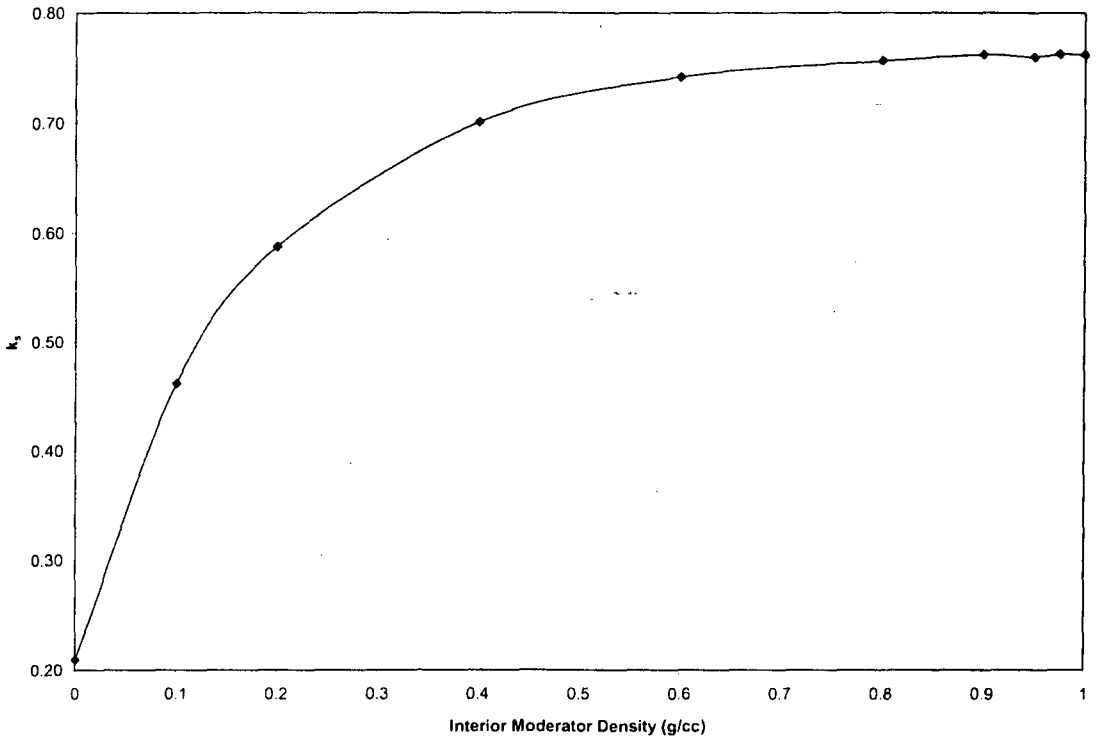

Table 6.4.10-1 Spiral Fuel Assembly - Base Data Comparisons

Base Data[1]	Cask Condition	Radial Shift Pattern	Axial Shift Pattern	^{235}U Mass Tolerance	Uranium Weight Fraction Tolerance	k_{eff}	σ	$k_{eff}+2\sigma$	k_s	Δk	$\Delta k_{eff}/\sigma$
Volume	Accident	CenteredC	Down	Nominal	Nominal	0.65222	0.00064	0.65350	0.67160	-0.00862	-13.5
Volume	Accident	CenteredC	Alternating	Nominal	Nominal	0.65957	0.00066	0.66089	0.67899	-0.00123	-1.9
Plate	Accident	CenteredC	Alternating	Nominal	Nominal	0.66084	0.00064	0.66212	0.68022	--	--
Volume	Accident	CenteredC	Alternating	Min	Nominal	0.63917	0.00067	0.64051	0.65861	-0.02161	-32.3
Volume	Accident	CenteredC	Alternating	Max	Nominal	0.68143	0.00065	0.68273	0.70083	0.02061	31.7
Volume	Accident	CenteredC	Alternating	Nominal	Min	0.65967	0.00066	0.66099	0.67909	-0.00113	-1.7
Volume	Accident	CenteredC	Alternating	Nominal	Max	0.66025	0.00065	0.66155	0.67965	-0.00057	-0.9
Volume	Accident	OutC	Alternating	Nominal	Nominal	0.65823	0.00062	0.65947	0.67757	-0.00265	-4.3
Volume	Accident	In	Alternating	Nominal	Nominal	0.66333	0.00063	0.66459	0.68269	0.00247	3.9
Volume	Accident	InC	Alternating	Nominal	Nominal	0.66273	0.00069	0.66411	0.68221	0.00199	2.9
Volume	Accident	InC	Alternating	Max	Nominal	0.68337	0.00066	0.68469	0.70279	0.02257	34.2

[1] Refers to cylindrical fuel approximation being based on the original plate dimension or on volume (i.e., H/U ratio) conserving model.

Table 6.4.10-2 Spiral Fuel Assembly - Basket Tolerance Evaluations

Fuel Tube Outer Diameter Tolerance	Fuel Tube Thickness Tolerance	Fuel Tube Height Tolerance	Fuel Basket Base Plate Tolerance	k_{eff}	σ	$k_{eff}+2\sigma$	k_s	Δk	$\Delta k_{eff}/\sigma$
Nominal	Nominal	Nominal	Nominal	0.68310	0.00069	0.68448	0.70258	--	--
Min	Nominal	Nominal	Nominal	0.68153	0.00066	0.68285	0.70095	-0.00163	-2.5
Max	Nominal	Nominal	Nominal	0.68410	0.00067	0.68544	0.70354	0.00096	1.4
Nominal	Min	Nominal	Nominal	0.68310	0.00069	0.68448	0.70258	--	--
Nominal	Max	Nominal	Nominal	0.65917	0.00067	0.66051	0.67861	-0.02397	-35.8
Nominal	Nominal	Min	Nominal	0.68368	0.00067	0.68502	0.70312	0.00054	0.8
Nominal	Nominal	Max	Nominal	0.68218	0.00065	0.68348	0.70158	-0.00100	-1.5
Nominal	Nominal	Nominal	Min	0.68341	0.00067	0.68475	0.70285	0.00027	0.4
Nominal	Nominal	Nominal	Max	0.68325	0.00064	0.68453	0.70263	0.00005	0.1
Min	Min	Min	Min	0.68254	0.00064	0.68382	0.70192	-0.00066	-1.0
Nominal	Min	Min	Min	0.68316	0.00068	0.68452	0.70262	0.00004	0.1
Max	Min	Min	Min	0.68434	0.00068	0.68570	0.70380	0.00122	1.8

Table 6.4.10-3 Spiral Fuel Assembly – Fuel Tolerance Evaluations

Fuel Plate Thickness Tolerance	Fuel Plate Clad Thickness Tolerance	Active Fuel Length Tolerance	Element Height Tolerance	H/U Study (Plate Location)	Inner & Outer Shells	k_{eff}	σ	$k_{eff}+2\sigma$	k_s	Δk	$\Delta k_{eff}/\sigma$
Nominal	Nominal	Nominal	Nominal	Nominal	Nominal	0.68310	0.00069	0.68448	0.70258	--	--
Min	Nominal	Nominal	Nominal	Nominal	Nominal	0.68643	0.00067	0.68777	0.70587	0.00329	4.9
Max	Nominal	Nominal	Nominal	Nominal	Nominal	0.68082	0.00067	0.68216	0.70026	-0.00232	-3.5
Nominal	No Clad	Nominal	Nominal	Nominal	Nominal	0.69059	0.00067	0.69193	0.71003	0.00745	11.1
Nominal	Min	Nominal	Nominal	Nominal	Nominal	0.68737	0.00066	0.68869	0.70679	0.00421	6.4
Nominal	Max	Nominal	Nominal	Nominal	Nominal	0.68003	0.00064	0.68131	0.69941	-0.00317	-5.0
Nominal	Nominal	Min	Nominal	Nominal	Nominal	0.68619	0.00067	0.68753	0.70563	0.00305	4.6
Nominal	Nominal	Max	Nominal	Nominal	Nominal	0.68111	0.00068	0.68247	0.70057	-0.00201	-3.0
Nominal	Nominal	Nominal	Fuel	Nominal	Nominal	0.68821	0.00065	0.68951	0.70761	0.00503	7.7
Nominal	Nominal	Nominal	Min	Nominal	Nominal	0.68512	0.00066	0.68644	0.70454	0.00196	3.0
Nominal	Nominal	Nominal	Max	Nominal	Nominal	0.68125	0.00068	0.68261	0.70071	-0.00187	-2.8
Nominal	Nominal	Nominal	Nominal	Min	Nominal	0.67318	0.00066	0.67450	0.69260	-0.00998	-15.1
Nominal	Nominal	Nominal	Nominal	Max	Nominal	0.69131	0.00066	0.69263	0.71073	0.00815	12.3
Nominal	Nominal	Nominal	Nominal	Min	Min	0.67580	0.00068	0.67716	0.69526	-0.00732	-10.8
Nominal	Nominal	Nominal	Nominal	Nominal	Min	0.69148	0.00067	0.69282	0.71092	0.00834	12.4
Nominal	Nominal	Nominal	Nominal	Max	Min	0.70408	0.00067	0.70542	0.72352	0.02094	31.3
Min	No Clad	Min	Fuel	Max	Min	0.72459	0.00066	0.72591	0.74401	0.04143	62.8

Table 6.4.10-4 Spiral Fuel Assembly - Moderator Density Variations

Set	Interior Moderator Density (g/cm^3)	Exterior Moderator Density (g/cm^3)	k_{eff}	σ	$k_{eff}+2\sigma$	k_s
H1	0.9998	0.0001	0.72640	0.00067	0.72774	0.74584
	0.9998	0.1	0.69875	0.00066	0.70007	0.71817
	0.9998	0.5	0.69587	0.00067	0.69721	0.71531
	0.9998	0.9998	0.69661	0.00067	0.69795	0.71605
H2	0.9998	0.0001	0.72640	0.00067	0.72774	0.74584
	0.975	0.0001	0.72575	0.00066	0.72707	0.74517
	0.95	0.0001	0.72604	0.00066	0.72736	0.74546
	0.925	0.0001	0.72466	0.00068	0.72602	0.74412
	0.9	0.0001	0.72562	0.00066	0.72694	0.74504
	0.85	0.0001	0.72273	0.00067	0.72407	0.74217
	0.8	0.0001	0.72102	0.00069	0.72240	0.74050
	0.6	0.0001	0.69709	0.00068	0.69845	0.71655
	0.4	0.0001	0.63905	0.00150	0.64205	0.66015
	0.2	0.0001	0.49709	0.00138	0.49985	0.51795
	0.1	0.0001	0.35749	0.00125	0.35999	0.37809
	0.0001	0.0001	0.10524	0.00046	0.10616	0.12426

Table 6.4.10-5 Spiral Fuel Assembly - Maximum Reactivity Case Summary

# Casks	Condition	Description	k_{eff}	σ	$k_{eff}+2\sigma$	k_s
Infinite Array	Accident	Nominal configuration accident case	0.66084	0.00064	0.66212	0.68022
Infinite Array	Accident	Maximum reactivity material and shift case nominal fuel and basket configuration	0.68310	0.00069	0.68448	0.70258
Infinite Array	Accident	Maximum reactivity basket tolerance – nominal fuel configuration	0.68434	0.00068	0.68570	0.70380
Infinite Array	Accident	Maximum reactivity fuel tolerance – nominal basket configuration	0.72459	0.00066	0.72591	0.74401
Infinite Array	Accident	Combined maximum reactivity configuration case	0.72640	0.00067	0.72774	0.74584
Infinite Array	Normal	Combined maximum reactivity configuration case	0.69609	0.00069	0.69747	0.71557
Single Cask	N/A	Single cask / inner shell reflected with water - maximum reactivity configuration	0.65762	0.00067	0.65896	0.67706

Table 6.4.10-6 MOATA Plate Bundle - Base Data Comparisons

Cask Condition	Radial Shift Pattern	Axial Shift Pattern	U235 Mass Tolerance	Uranium Weight Fraction Tolerance	k_{eff}	σ	$k_{eff}+2\sigma$	k_s	Δk	$\Delta k_{eff}/\sigma$
Accident	CenteredC	Down	Nominal	Nominal	0.67757	0.00074	0.67905	0.69715	-0.00458	-6.2
Accident	CenteredC	Alternating	Nominal	Nominal	0.68207	0.00078	0.68363	0.70173	--	--
Accident	CenteredC	Alternating	Nominal	Min	0.68113	0.00077	0.68267	0.70077	-0.00096	-1.2
Accident	CenteredC	Alternating	Nominal	Max	0.68367	0.00077	0.68521	0.70331	0.00158	2.1
Accident	CenteredC	Alternating	Min	Nominal	0.68163	0.00076	0.68315	0.70125	-0.00048	-0.6
Accident	CenteredC	Alternating	Max	Nominal	0.68624	0.00076	0.68776	0.70586	0.00413	5.4
Accident	OutC	Alternating	Max	Nominal	0.67948	0.00077	0.68102	0.69912	-0.00261	-3.4
Accident	In	Alternating	Max	Nominal	0.69075	0.00078	0.69231	0.71041	0.00868	11.1
Accident	InC	Alternating	Max	Nominal	0.69125	0.00080	0.69285	0.71095	0.00922	11.5
Accident	InC	Alternating	Max	Max	0.69234	0.00078	0.69390	0.71200	0.01027	13.2

Table 6.4.10-7 MOATA Plate Bundle - Basket Tolerance Evaluations

Fuel Tube Outer Diameter Tolerance	Fuel Tube Thickness Tolerance	Fuel Tube Height Tolerance	Fuel Basket Base Plate Tolerance	k_{eff}	σ	$k_{eff}+2\sigma$	k_s	Δk	$\Delta k_{eff}/\sigma$
Nominal	Nominal	Nominal	Nominal	0.69234	0.00078	0.69390	0.71200	--	--
Min	Nominal	Nominal	Nominal	0.68994	0.00077	0.69148	0.70958	-0.00242	-3.1
Max	Nominal	Nominal	Nominal	0.69108	0.00075	0.69258	0.71068	-0.00132	-1.8
Nominal	Min	Nominal	Nominal	0.69234	0.00078	0.69390	0.71200	--	--
Nominal	Max	Nominal	Nominal	0.67140	0.00077	0.67294	0.69104	-0.02096	-27.2
Nominal	Nominal	Min	Nominal	0.69146	0.00080	0.69306	0.71116	-0.00084	-1.0
Nominal	Nominal	Max	Nominal	0.69054	0.00079	0.69212	0.71022	-0.00178	-2.3
Nominal	Nominal	Nominal	Min	0.69152	0.00078	0.69308	0.71118	-0.00082	-1.1
Nominal	Nominal	Nominal	Max	0.69204	0.00079	0.69362	0.71172	-0.00028	-0.4
Max	Min	Min	Min	0.69326	0.00078	0.69482	0.71292	0.00092	1.2
Nominal	Min	Min	Min	0.69364	0.00077	0.69518	0.71328	0.00128	1.7
Min	Min	Min	Min	0.69024	0.00079	0.69182	0.70992	-0.00208	-2.6

Table 6.4.10-8 MOATA Plate Bundle - Fuel Tolerance Evaluations

Fuel Plate Width Tolerance	Fuel Plate Thickness Tolerance	Fuel Plate Clad Thickness Tolerance	Active Fuel Length Tolerance	Active Fuel Width Tolerance	Element Height Tolerance	Spacer Thickness Tolerance	Side Plate Thickness Tolerance	Side Plate Width Tolerance	k_{eff}	σ	$k_{eff}+2\sigma$	k_s	Δk	$\Delta k_{eff}/\sigma$
Nominal	Nominal	Nominal	Nominal	Nominal	Nominal	Nominal	Nominal	Nominal	0.69234	0.00078	0.69390	0.71200	--	--
Min	Nominal	Nominal	Nominal	Nominal	Nominal	Nominal	Nominal	Nominal	0.69017	0.00078	0.69173	0.70983	-0.00217	-2.8
Max	Nominal	Nominal	Nominal	Nominal	Nominal	Nominal	Nominal	Nominal	0.69105	0.00077	0.69259	0.71069	-0.00131	-1.7
Nominal	Min	Nominal	Nominal	Nominal	Nominal	Nominal	Nominal	Nominal	0.69190	0.00078	0.69346	0.71156	-0.00044	-0.6
Nominal	Max	Nominal	Nominal	Nominal	Nominal	Nominal	Nominal	Nominal	0.69192	0.00077	0.69346	0.71156	-0.00044	-0.6
Nominal	Nominal	Min	Nominal	Nominal	Nominal	Nominal	Nominal	Nominal	0.69424	0.00077	0.69578	0.71388	0.00188	2.4
Nominal	Nominal	Max	Nominal	Nominal	Nominal	Nominal	Nominal	Nominal	0.69150	0.00078	0.69306	0.71116	-0.00084	-1.1
Nominal	Nominal	Nominal	Min	Nominal	Nominal	Nominal	Nominal	Nominal	0.68998	0.00079	0.69156	0.70966	-0.00234	-3.0
Nominal	Nominal	Nominal	Max	Nominal	Nominal	Nominal	Nominal	Nominal	0.69153	0.00078	0.69309	0.71119	-0.00081	-1.0
Nominal	Nominal	Nominal	Nominal	Min	Nominal	Nominal	Nominal	Nominal	0.68240	0.00082	0.68404	0.70214	-0.00986	-12.0
Nominal	Nominal	Nominal	Nominal	Max	Nominal	Nominal	Nominal	Nominal	0.69920	0.00080	0.70080	0.71890	0.00690	8.6
Nominal	Nominal	Nominal	Nominal	Nominal	Fuel	Nominal	Nominal	Nominal	0.70756	0.00079	0.70914	0.72724	0.01524	19.3
Nominal	Nominal	Nominal	Nominal	Nominal	Min	Nominal	Nominal	Nominal	0.69029	0.00077	0.69183	0.70993	-0.00207	-2.7
Nominal	Nominal	Nominal	Nominal	Nominal	Max	Nominal	Nominal	Nominal	0.69220	0.00080	0.69380	0.71190	-0.00010	-0.1
Nominal	Nominal	Nominal	Nominal	Nominal	Nominal	Min	Nominal	Nominal	0.67080	0.00076	0.67232	0.69042	-0.02158	-28.4
Nominal	Nominal	Nominal	Nominal	Nominal	Nominal	Max	Nominal	Nominal	0.70952	0.00078	0.71108	0.72918	0.01718	22.0
Nominal	Nominal	Nominal	Nominal	Nominal	Nominal	Nominal	Water	Nominal	0.69518	0.00080	0.69678	0.71488	0.00288	3.6
Nominal	Nominal	Nominal	Nominal	Nominal	Nominal	Nominal	Min	Nominal	0.69087	0.00079	0.69245	0.71055	-0.00145	-1.8
Nominal	Nominal	Nominal	Nominal	Nominal	Nominal	Nominal	Max	Nominal	0.69185	0.00077	0.69339	0.71149	-0.00051	-0.7
Nominal	Nominal	Nominal	Nominal	Nominal	Nominal	Nominal	Nominal	Min	0.69203	0.00075	0.69353	0.71163	-0.00037	-0.5
Nominal	Nominal	Nominal	Nominal	Nominal	Nominal	Nominal	Nominal	Max	0.69179	0.00074	0.69327	0.71137	-0.00063	-0.9
Max	Nominal	Min	Nominal	Max	Fuel	Max	Nominal	Nominal	0.73925	0.00078	0.74081	0.75891	0.04691	60.1
Max	Nominal	Min	Nominal	Max	Fuel	Max	Water	Water	0.74205	0.00081	0.74367	0.76177	0.04977	61.4

Table 6.4.10-9 MOATA Plate Bundle - Moderator Density Variations

Set	Interior Moderator Density (g/cm^3)	Exterior Moderator Density (g/cm^3)	k_{eff}	σ	$k_{eff}+2\sigma$	k_s
H1	0.9998	0.0001	0.74285	0.00081	0.74447	0.76257
	0.9998	0.1	0.71116	0.00081	0.71278	0.73088
	0.9998	0.5	0.70785	0.00080	0.70945	0.72755
	0.9998	0.9998	0.70742	0.00081	0.70904	0.72714
H2	0.9998	0.0001	0.74285	0.00081	0.74447	0.76257
	0.975	0.0001	0.74337	0.00080	0.74497	0.76307
	0.95	0.0001	0.74073	0.00078	0.74229	0.76039
	0.9	0.0001	0.74275	0.00078	0.74431	0.76241
	0.8	0.0001	0.73741	0.00077	0.73895	0.75705
	0.6	0.0001	0.72186	0.00124	0.72434	0.74244
	0.4	0.0001	0.67919	0.00174	0.68267	0.70077
	0.2	0.0001	0.56690	0.00133	0.56956	0.58766
	0.1	0.0001	0.44132	0.00118	0.44368	0.46178
	0.0001	0.0001	0.19016	0.00057	0.19130	0.20940

Table 6.4.10-10 MOATA Plate Bundle - Maximum Reactivity Case Summary

# Casks	Condition	Description	k_{eff}	σ	$k_{eff}+2\sigma$	k_s
Infinite Array	Accident	Nominal configuration accident case	0.68207	0.00078	0.68363	0.70173
Infinite Array	Accident	Maximum reactivity material and shift case	0.69234	0.00078	0.69390	0.71200
Infinite Array	Accident	Maximum reactivity basket tolerance	0.69024	0.00079	0.69182	0.70992
Infinite Array	Accident	Maximum reactivity fuel tolerance	0.74205	0.00081	0.74367	0.76177
Infinite Array	Accident	Combined maximum reactivity configuration case	0.74285	0.00081	0.74447	0.76257
Infinite Array	Normal	Combined maximum reactivity configuration case	0.70622	0.00082	0.70786	0.72596
Single Cask	N/A	Single cask / inner shell reflected with water - maximum reactivity configuration	0.65594	0.00082	0.65758	0.67568

Chapter 7

TABLE OF CONTENTS

LIST OF FIGURES

LIST OF TABLES

Note: If the O-rings have been replaced, the port cover must be tested in accordance with the requirements of Section 8.1.3.2.2.

46. For Alternate B port cover configuration, if used, perform the leakage rate test as described in Section 8.1.3.3.2.

47. Decontaminate the shipping cask and install the weather seal.

48. Verify the lift yoke arm guides are removed and attach lifting yoke to the front trunnions.

49. Remove the cask to dry loading station tie-downs.

50. Lift and transfer the cask to the trailer. Carefully lower the cask until engagement of the cask cut-outs with the rear rotation trunnions. Gently lower the cask to rest on the front tie-down saddle, moving the crane and/or trailer, as required, to maintain cask engagement to the trailer and crane cables vertical.

51. Disengage the lifting yoke from the cask trunnions and set it aside.

52. Install the cask tie-down. Install the cask top and bottom impact limiters.

53. Install a tamper-indicating seal on a top attachment point of the top impact limiter.

54. Close the front and rear doors of the ISO container and install roof.

55. Complete a radiation and contamination survey on the external surfaces of the package and record the data. Ensure removable contamination and radiation dose rate survey results of the package comply with the limits specified in 10 CFR 71.87(i) and (j).

56. Measure the dose rate in millirems per hour at one meter from the package surface to determine the Transport Index (TI). Indicate the TI on the Radioactive Material labels applied to the package in accordance with 49 CFR 172 Subpart E. If TI is greater than 10, the package shipment is required to be as "exclusive use."

57. Determine the appropriate Criticality Safety Index (CSI) assigned to the package contents in accordance with the Certificate of Compliance, and indicate the correct CSI on the Fissile Material label applied to the package.

58. Apply appropriate placards to the transport vehicle in accordance with 49 CFR 172 Subpart F.

59. Complete the shipping documents and provide the carrier with written instructions regarding the requirements for maintaining an exclusive use shipment, if required.

7.1.4.1 Procedure for Loading MTR Fuel Plates into MTR Plate Canister

1. Examine the MTR plate canister and inspect for damage. Visually verify that one end of the canister is installed, the six associated bolts are installed and the other end is removed.

2. Place the can in the loading fixture.
3. Load the fuel plates into the canister. Verify that the number of fuel plates in the canister is no more than the maximum number of plates in an intact MTR fuel element of its type.
4. Install the lid and lid bolts.

7.1.5 MTR General and Preferential Loading Procedures

Up to 42 LEU, MEU, and HEU MTR fuel elements may be loaded into the NAC-LWT MTR Fuel Basket, i.e., 7 fuel elements per basket module × 6 basket modules per fuel basket, except for LEU MTR fuel elements with greater than 470 g ^{235}U, which are limited to 4 elements per basket module as detailed in the following paragraphs. Each MTR basket module has 7 fuel element positions. The MTR basket module loading and alternative loading diagrams depicted in Figure 7.1-1 have a center position (Position 1), two exterior positions (Positions 2 and 3) that are in line with the center position, and four exterior positions (Positions 4, 5, 6, and 7) that are adjacent to the center row positions. The basket module's fuel element locations are specifically identified to ensure loading of each location with the appropriate fuel element. Ensuring MTR fuel loadings are performed in strict accordance with the procedures presented herein will ensure that the MTR fuel content conditions of the Certificate of Compliance (CoC) are met and that the analyses presented in this SAR are bounded.

MTR fuel elements are selected for loading into specific fuel element locations based on the decay heat of each individual fuel element at the time of loading. Figures 7.1-2 through 7.1-5 are provided to assist in determining the acceptability of a MTR fuel element for loading in a 30 W uniform loading pattern depending on enrichment (i.e., LEU, MEU or HEU) or ^{235}U content (i.e. 380 or 460 grams). For determining the acceptability of higher heat load HEU fuel elements, Figures 7.1-6 and 7.1-7 are provided for 380 and 460 grams of ^{235}U, respectively. The use of the fuel element cool time versus fuel burnup figures are described in Section 7.1.5.4. LEU MTR fuel elements with a ^{235}U content greater than 470 grams, but not exceeding 640 grams, are restricted to baskets containing a maximum of four fuel elements (or an equivalent number of fuel plates per opening). The four element per basket module is in effect even if only one LEU MTR assembly exceeds 470 g per element. Specific basket locations and restrictions for the high load LEU elements are described in Section 7.1.5.1.

The procedural steps and sequence to ensure the MTR fuel loading and content condition limits are met are: 1) determine ^{235}U content weight per element; 2) determine fuel element decay heat load per Section 7.1.5.4; 3) determine basket module loading position for each element and overall basket loading pattern; and 4) individual basket module loading and assembly of the fuel basket in the NAC-LWT. Each of these steps is independently verified.

Attention to the overall cask loading pattern allows the decay heat load of the cask to be maintained as uniform, as is practical and within CoC total heat load limits. Loading diagrams for each individual module and the complete cask assembly shall be developed and used during the basket module and cask loading operations. After the decay heat load of each of the MTR fuel elements to be loaded and transported is calculated or determined and verified, the loading and content considerations of Sections 7.1.5.1 through 7.1.5.3 shall be met or complied with to establish the final acceptable loading pattern and sequence.

7.1.5.1 General Loading Requirements

1. The maximum decay heat load per MTR fuel basket module shall not exceed 210 W and the maximum decay heat load per cask (package) shall not exceed 1.26 kW. A MTR fuel element with a decay heat greater than 120 W shall not be loaded.

2. LEU, MEU and HEU MTR fuel elements with decay heat not exceeding 30 W per element may be loaded in any basket module fuel element location in any combination.

3. HEU MTR fuel elements with decay heats exceeding 30 W shall be preferentially loaded in a basket module in decreasing decay heat order according to the Loading Diagram or Alternate Loading Diagram in Figure 7.1-1, with the highest heat load element loaded in fuel location one. Fuel elements with heat loads of up to 120 W shall only be loaded in the center fuel element location of any MTR fuel basket module. The decay heat of the fuel element in either of the two fuel element locations (i.e., number 2 or 3), in line with the center fuel element location of a MTR fuel basket module, shall not exceed 70 W.

4. LEU MTR fuel elements (or canistered fuel plates) with a ^{235}U content greater than 470 g, and not exceeding 640 g, shall only be loaded into basket positions 4, 5, 6 and 7 shown in Figure 7.1-1. Baskets containing the high fissile mass LEU MTR elements (>470 g ^{235}U) shall not contain fuel elements (or fuel plates) in basket opening positions 1, 2 and 3. The capacity limitation of a maximum of four MTR fuel assemblies is in effect even if a single LEU MTR fuel assembly having >470 g ^{235}U is to be loaded.

5. An MTR plate canister may be loaded into any fuel basket module fuel element location. The contents of each plate canister shall be limited to the number of fuel plates, dimensions and masses of an equivalent intact MTR fuel element.

6. MTR fuel elements with corrosion and/or mechanically damaged cladding may be loaded, provided that the total surface area of through-clad corrosion and/or mechanical damage does not exceed 2,775 cm^2 per package.

7.1.5.2 Determination of Basket Module Loading Pattern

1. Perform an evaluation of the full inventory of fuel elements to be loaded into the NAC-LWT cask(s) and develop an overall loading plan that minimizes overall dose rates to minimize general population dose and operator dose. The loading of LEU MTR fuel elements with greater than 470 g ^{235}U shall be governed by the loading restrictions in item 4 of Section 7.1.5.1.
2. Select up to seven MTR fuel elements to be loaded in a basket module meeting the general loading requirements of 7.1.5.1.
3. Rank the fuel elements in order of decreasing decay heat load from 1 to 7. (The assembly with the highest decay heat is designated number 1.)
4. Generate loading diagrams for each basket module based on Figure 7.1-1, by placing the numbered assemblies in the matching numbered basket module positions.
5. Repeat steps 1 through 4 for all of the basket modules to be loaded.
6. Independently verify the basket module loading diagrams.
7. The loading diagrams shall be used to direct the loading of the basket modules per Section 7.1.5.3.

Once the basket module loading charts are complete, they are used to direct the loading of the basket modules.

7.1.5.3 Basket Loading Procedure

1. Locate the MTR fuel element to be loaded into the basket module per the loading diagram prepared for that module type (i.e., base, intermediate or top).
2. Independently verify the element identification.
3. Load the element into the predetermined fuel basket module fuel element location using the loading diagram.
4. Independently verify that the fuel element loading in the basket module complies with the loading diagram.
5. Repeat steps 1 through 4 until all identified fuel elements have been loaded into basket modules in compliance with the loading diagrams.

7.1.5.4 Estimating Assembly Decay Heat

When the decay heat of a fuel element is not known, the assembly burnup (MWd/MTU) and cooling time (years) can be used to define the allowable basket module positions using Figures 7.1-2 through 7.1-7, depending on fuel enrichment (i.e., LEU, MEU or HEU) or ^{235}U content.

HEU MTR fuel elements may be loaded with heat loads greater than 30 W. HEU elements exceeding 30 W shall be preferentially loaded, and Figures 7.1-6 and 7.1-7 identify the appropriate cooling times and burnup limits for 120 W, 70 W and 20 W HEU elements, having a ^{235}U mass of up to 380 grams and a ^{235}U mass of up to 460 grams, respectively. The following steps are used to develop the appropriate loading patterns.

1. Locate the point on Figure 7.1-6 or 7.1-7 for the fuel element burnup and cooling time, and ^{235}U content.
2. If the located point is above the 20 W line, there are no restrictions on fuel element placement in the basket module.
3. If the located point is between the 20 W and 70 W lines, the element is loaded as a 70 W element.
4. If the located point is between the 70 W and 120 W lines, the element is loaded as a 120 W element.
5. If the located point is below the 120 W line, the element shall not be loaded in the NAC-LWT cask.
6. The maximum total decay heat load for a preferentially loaded basket module shall not exceed 210 W and 1.26 kW for a loaded NAC-LWT cask.
7. Each shipper shall ensure that the Certificate of Compliance maximum decay heat load limits of 210 W per basket module and 1.26 kW per cask are not exceeded.

Figure 7.1-1 MTR Fuel Basket Module Loading Pattern (Top View)

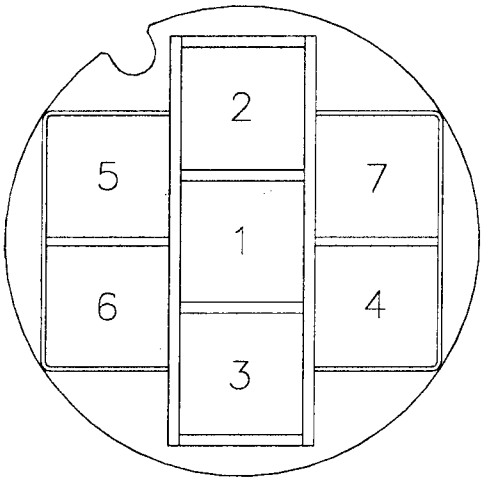

Alternate Loading Diagram

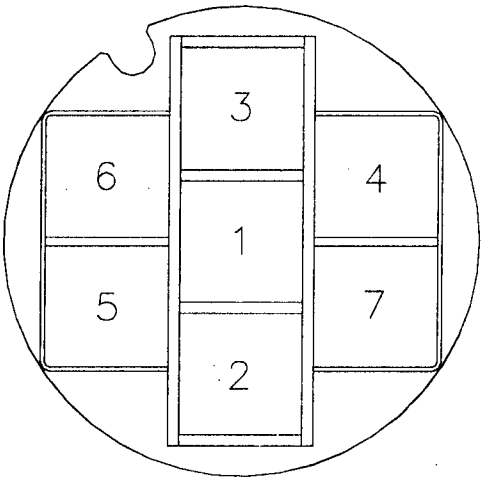

Loading Diagram

Figure 7.1-2 LEU MTR Fuel Basket Loading Guidelines for 30 W Uniform Loading

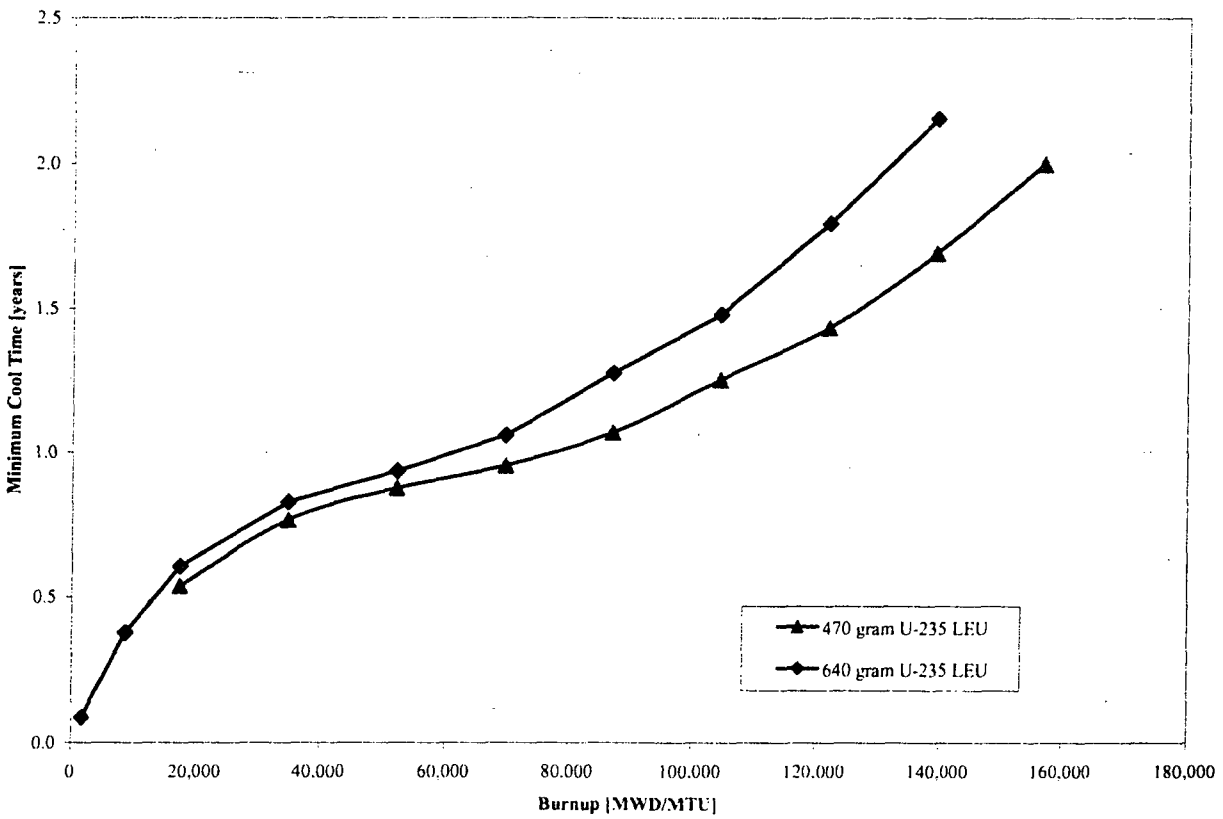

Figure 7.1-3 MEU MTR Fuel Basket Loading Guidelines for 30 W Uniform Loading

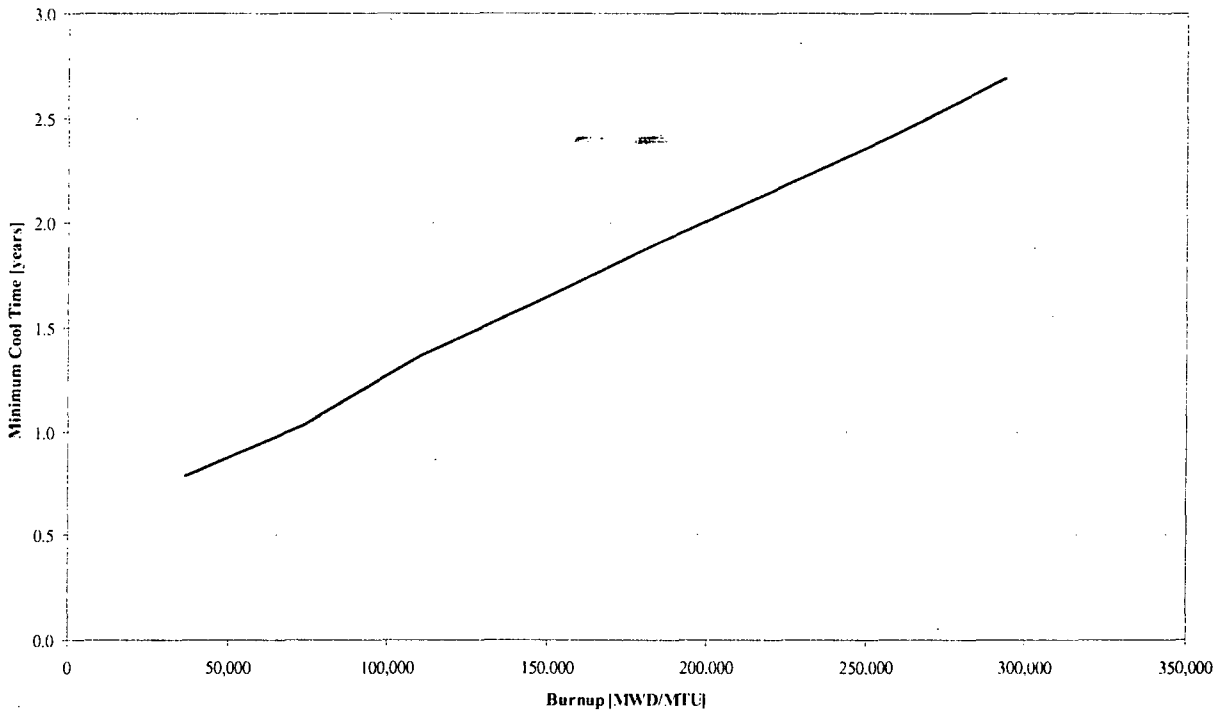

Figure 7.1-4 HEU MTR Fuel Basket Loading Guidelines for 30 W Uniform Loading – Maximum 380 grams ^{235}U

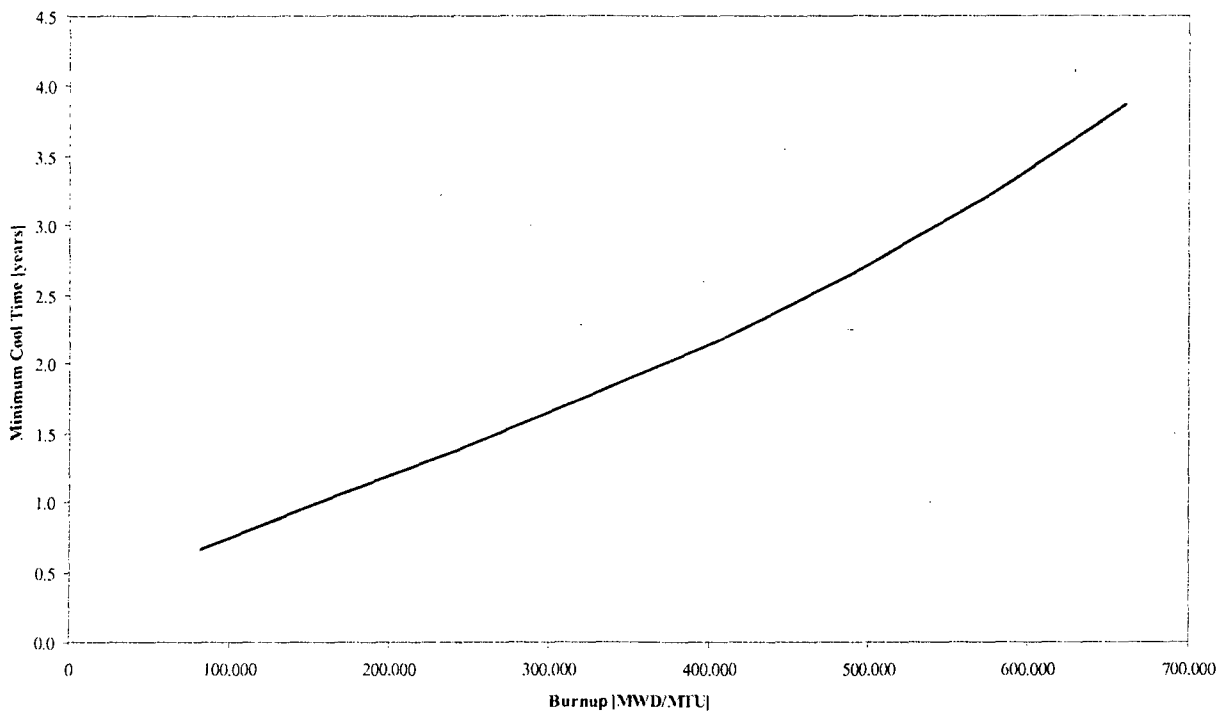

Figure 7.1-5 HEU MTR Fuel Basket Loading Guidelines for 30 W Uniform Loading – Maximum 460 grams ^{235}U

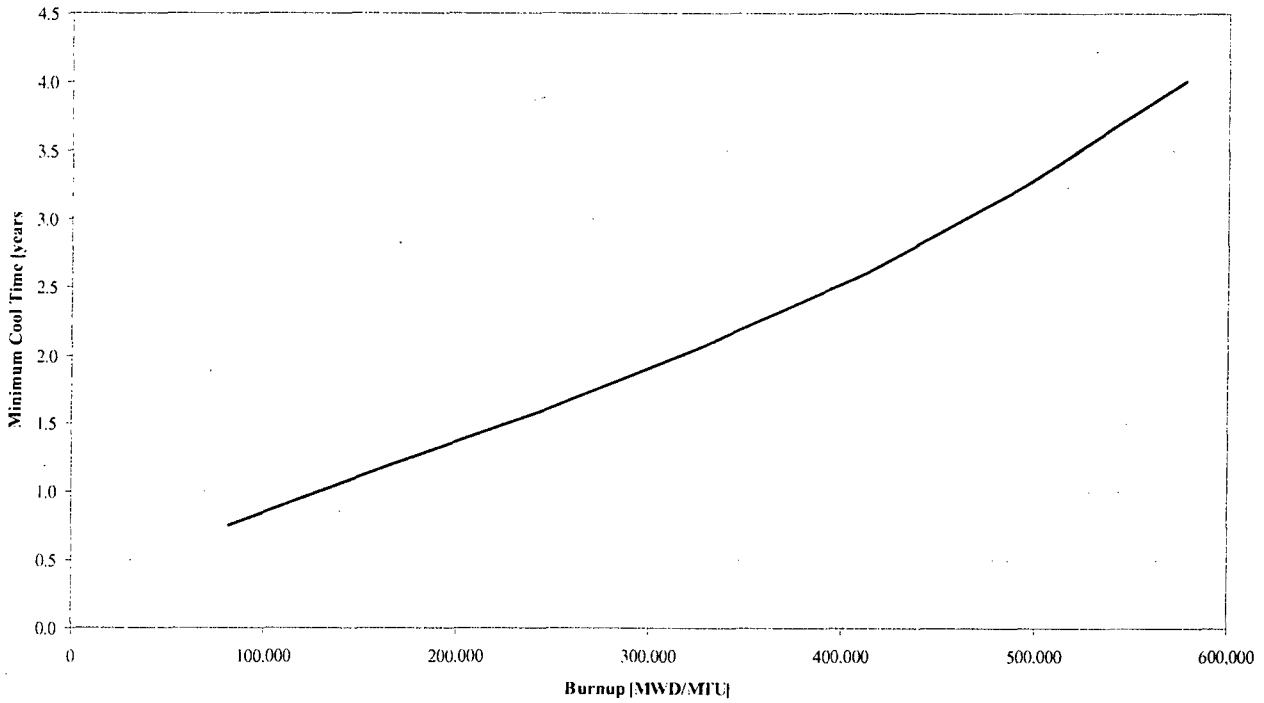

Figure 7.1-6 HEU MTR Fuel Basket Loading Guidelines for Preferential Loading – Maximum 380 grams ^{235}U

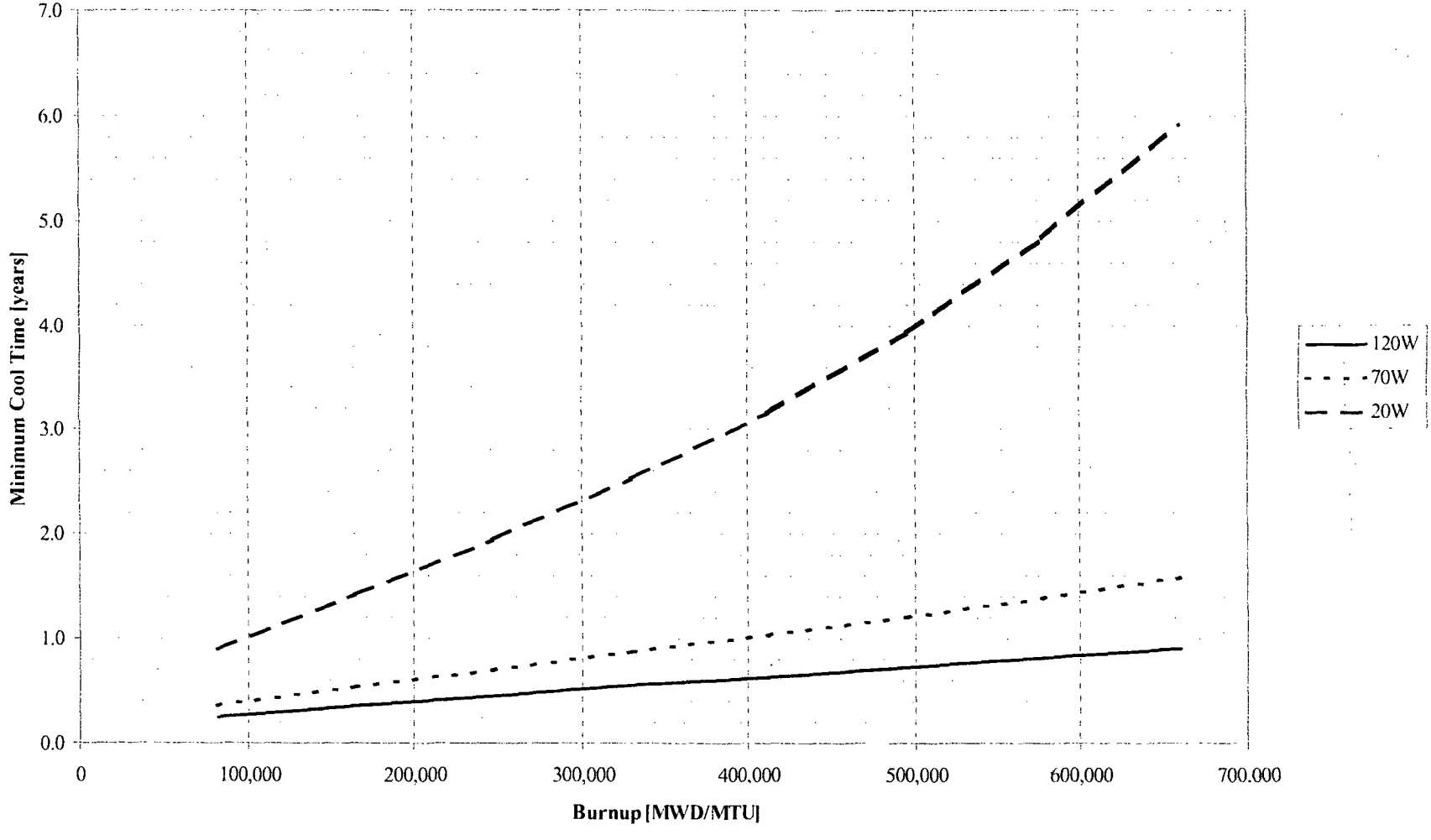

Figure 7.1-7 HEU MTR Fuel Basket Loading Guidelines for Preferential Loading – Maximum 460 grams ^{235}U

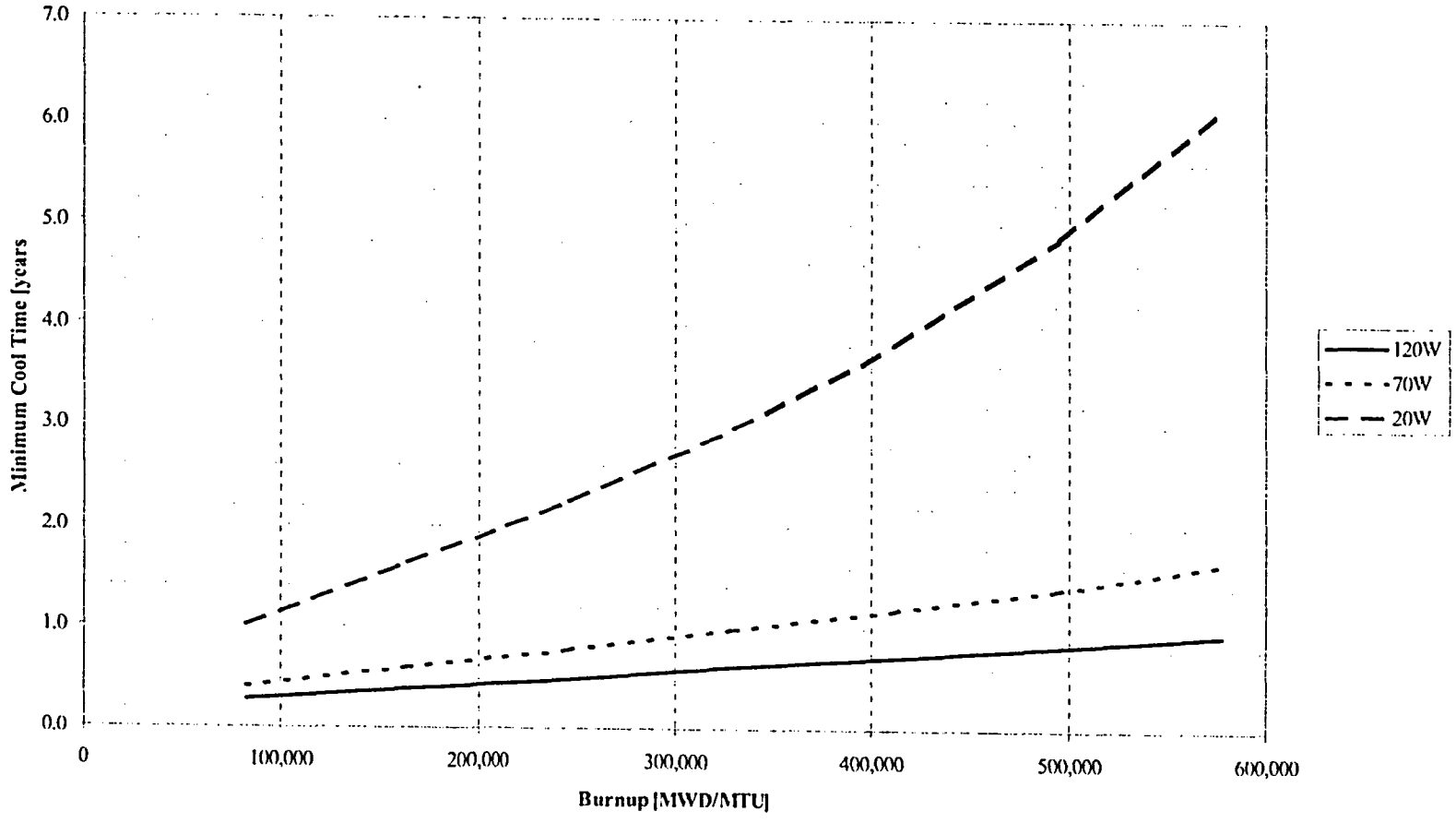

Figure 7.1-8 DIDO LEU Cooling Time vs. Fuel Burnup Basket Module Loading Guidelines for Uniform Loading

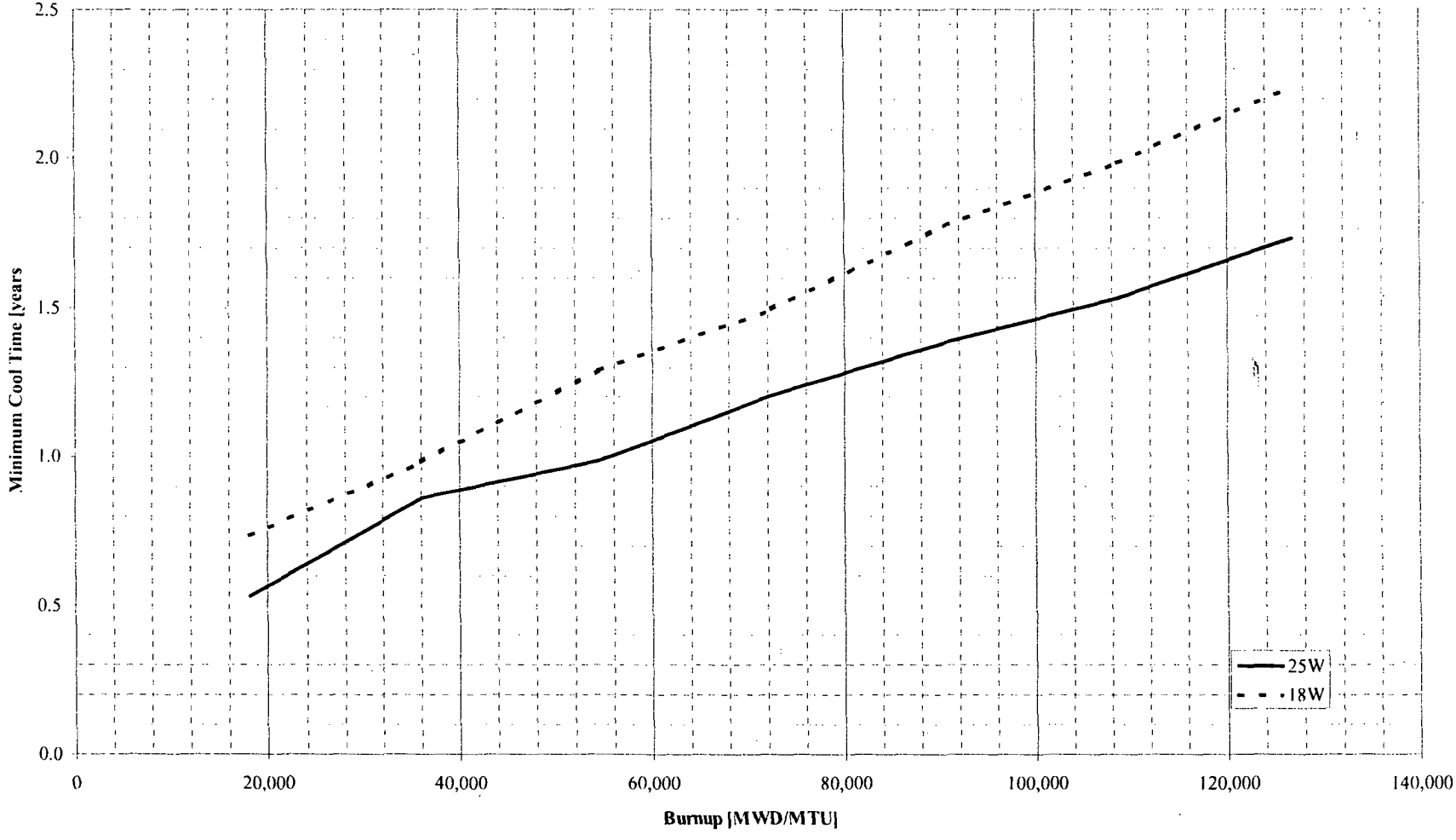

Figure 7.1-9 DIDO MEU Cooling Time vs. Fuel Burnup Basket Module Loading Guidelines for Uniform Loading

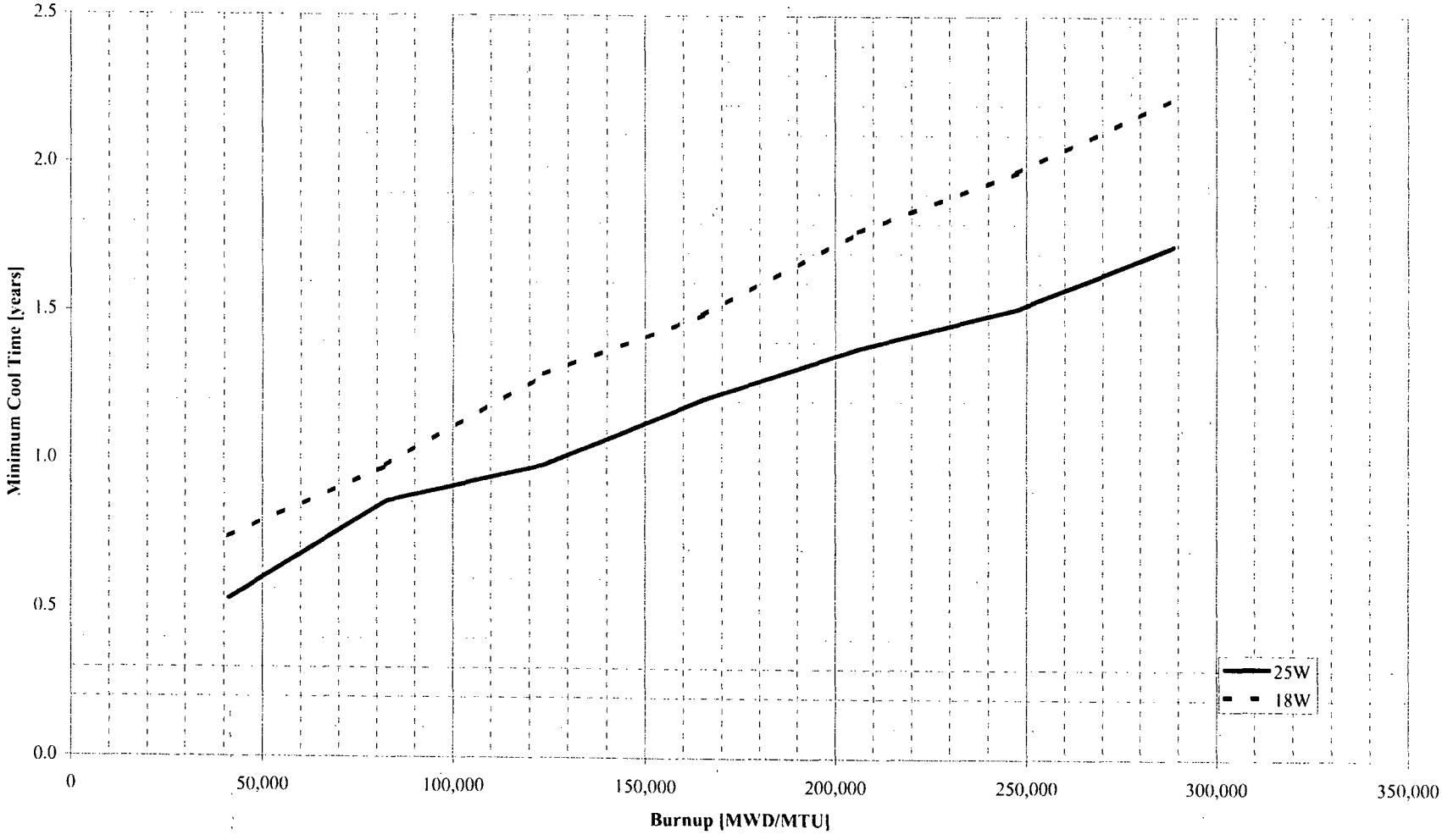

Figure 7.1-10 DIDO HEU Cooling Time vs. Fuel Burnup Basket Module Loading Guidelines for Uniform Loading

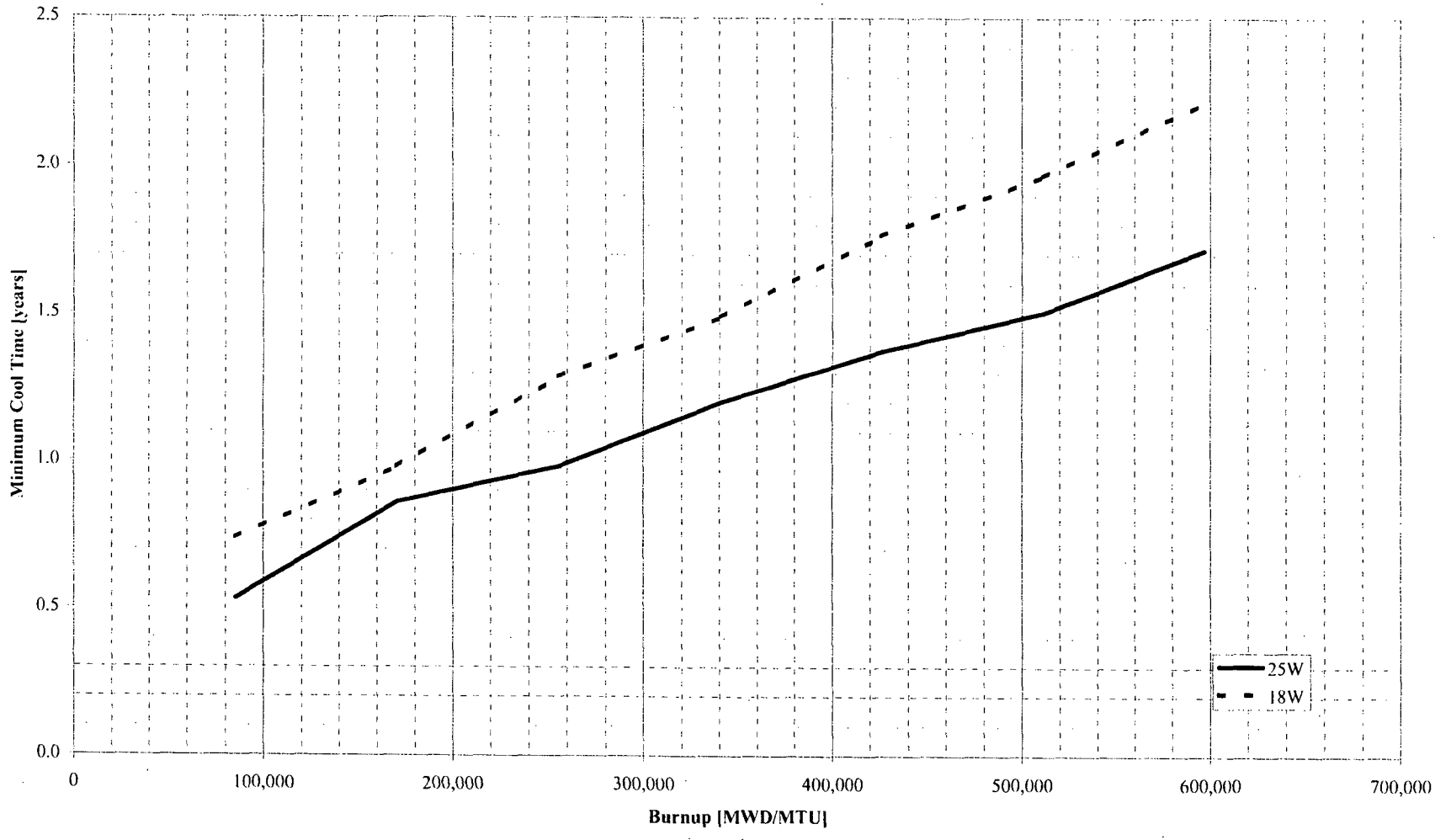

Figure 7.1-11 Bounding DIDO Element Minimum Cool Time vs. % ^{235}U Depletion

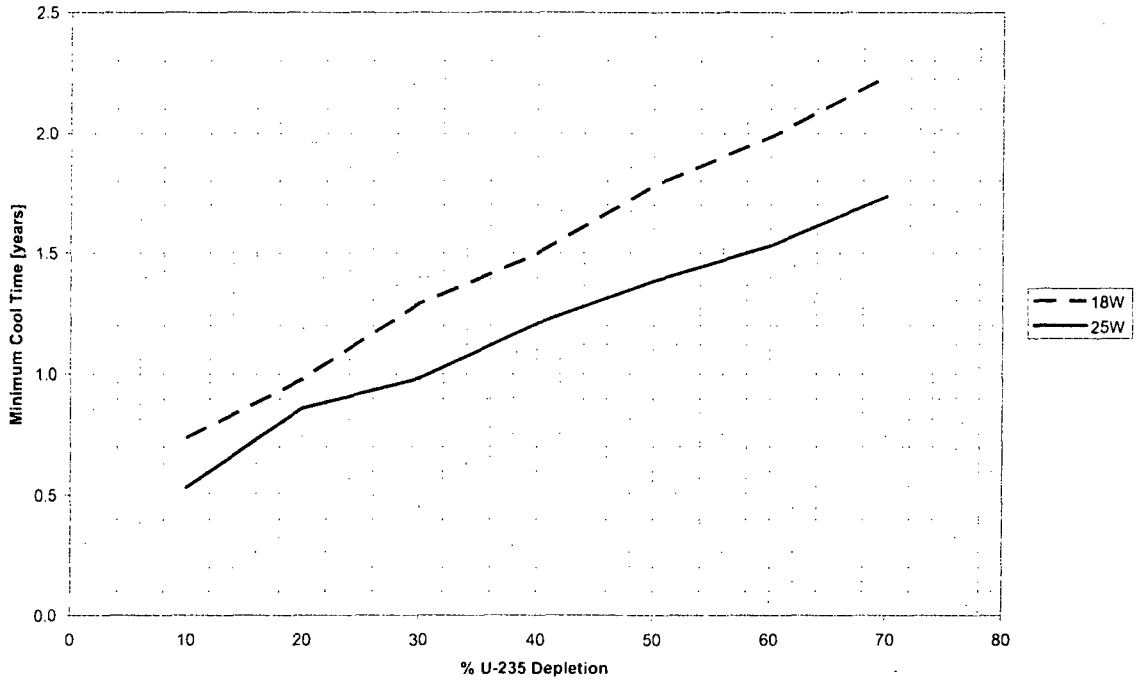

7.1.6 Procedure for Dry Loading of TRIGA Fuel Basket Modules and GA IFM Modules into the NAC-LWT Cask

This procedure presents the steps for dry loading, using a transfer cask, of the non-poisoned or poisoned TRIGA fuel basket modules into the NAC-LWT. For transport, five TRIGA fuel basket modules, consisting of a top module, a base module, and three intermediate modules must be loaded into the NAC-LWT. An alternative loading option is available for the poisoned TRIGA basket modules. This configuration, Configuration 2, consists of 1 base module and 4 intermediate modules. A spacer attached to the underside of the NAC-LWT lid is used with Configuration 2. Each basket module consists of seven cells, a center cell, and six peripheral cells. The center cell of the nonpoisoned basket design is blocked and cannot be loaded. Each unblocked cell may contain up to four TRIGA fuel elements, or up to 16 TRIGA fuel cluster rods within a fuel rod insert placed into the cell prior to loading. Each nonpoisoned basket module may contain up to 24 TRIGA fuel elements, for a total of 120 elements, or up to 96 TRIGA fuel cluster rods, for a total of 480 rods. Each poisoned basket module may contain up to 28 TRIGA fuel elements, for a total of 140 elements, or up to 112 TRIGA fuel cluster rods, for a total of 560 rods. The maximum decay heat load of any TRIGA fuel element is 7.5 watts, while the maximum decay heat load of a TRIGA fuel cluster rod is 1.875 watts. An alternative loading option is available for the General Atomics (GA) Irradiated Fuel Material (IFM) Fuel Handling Units (FHU). This configuration consists of one GA IFM top module and one GA IFM spacer. The GA IFM top module, based on the TRIGA basket design, has two canister storage tubes that hold the GA IFM FHU.

TRIGA fuel elements may be transported directly in the basket module cell, in a screened failed fuel can, or in a sealed failed fuel can. TRIGA fuel cluster rods may be transported within the fuel rod insert in a basket cell, or in a sealed failed fuel can. The screened and sealed failed fuel cans fit in a module cell. The screened failed fuel can holds up to four TRIGA fuel elements, while the sealed failed fuel can holds the equivalent of up to two TRIGA fuel elements or up to 6 TRIGA fuel cluster rods.

When loading TRIGA fuel elements directly into the basket cells of a TRIGA basket module, the fuel elements may be loaded with either 4 elements per cell, or one element per cell, without shoring. If a basket cell is loaded with 2 or 3 intact elements, dummy rods will be inserted as necessary to fill the remaining space in the cell.

Screened failed fuel cans are provided in two lengths. The short can is intended for TRIGA fuel elements having a nominal length of about 30 inches, which includes all of the TRIGA fuel elements except fuel follower control rod elements. The long can accommodates the fuel follower control elements, which have a nominal length of 45 inches. The short can may be used in the top or base basket module. The long can may only be installed in the top module. The cans have a screened bottom that permits water draining but retains gross particulate material. TRIGA fuel cluster rods may not be loaded into screened failed fuel cans.

TRIGA fuel pieces, fuel debris, and damaged fuel elements or damaged fuel cluster rods are loaded into sealed failed fuel cans. The cans are provided in two lengths. The short can may be used in the base or top basket modules. The long can may only be used in the top module. The sealed cans are vacuum dried prior to loading into a TRIGA fuel basket.

There are two separate GA IFM FHU designs. One FHU is designed to hold research reactor fuel and the other is designed to hold High-Temperature Gas-Cooled Reactor fuel pellets. Each FHU consists of a sealed inner canister within a sealed outer canister. Each FHU contains irradiated fuel materials as described in Chapter 1. When loading the GA IFM FHUs, each individual sealed FHU will be loaded separately into a single GA IFM basket. This single basket containing two GA IFM FHUs and a spacer will comprise the entire cask load. Loading of the GA IFM basket into the NAC-LWT cask will utilize the TRIGA dry configuration loading procedure that is described in the following paragraphs.

TRIGA fuel elements that can be loaded into the cask are limited to a maximum decay heat of 7.5 watts per element, as discussed in Section 1.2.3. The decay heat load of the element must be calculated, and verified to be equal to or less than 7.5 watts per element prior to loading. TRIGA fuel cluster rods that can be loaded into the cask are limited to a maximum decay heat of 1.875 watts per element, as discussed in Section 1.2.3 (by reference to Table 5.1.1). The decay heat load of the fuel cluster rod must be calculated, and verified to be equal to or less than 1.875 watts per element prior to loading.

The procedure for loading the package with TRIGA fuel in a dry configuration is as follows:

1. Perform a receiving survey of the empty cask or closed ISO container and inspect for damage.

2. Position the trailer in the designated area. Set the trailer brakes and block the wheels against movement in either direction unless site-specific conditions require the trailer to move in conjunction with, or instead of, the overhead crane to upend the cask in Step 7 or to downend the cask in Step 51.
3. Remove the roof from the ISO container and open the front and rear ISO doors. Remove roof cross members, if installed.

   Note: Verify that the package type designation in the package identification number on the nameplate displays (U).

4. Perform a Health Physics survey of the cask and adjacent surfaces of the container.

   Note: A receiving survey of the cask and transporter must be performed as soon as practicable after arrival at the site to ensure compliance with 10 CFR 20, 10 CFR 71.87(i), 10 CFR 71.47, and to ensure timely reporting of any transportation noncompliance.

5. Remove the top and bottom impact limiters.
6. Remove the cask tie-down strap.
7. Using the cask lifting yoke with the lift yoke arm guides removed, engage the lifting trunnions of the front end of the cask. Raise the cask to a vertical position on the rear cask support, moving the crane as required to keep the cask engaged in the trailer rear rotation supports and the crane cable vertical. When the cask is fully vertical, lift the cask from the container.
8. Place the cask onto the dry loading station. Connect the cask to loading station tie-downs and tighten evenly.
9. Disengage the lifting yoke and move clear.
10. Remove the weather seal from the cask.
11. Remove the vent and drain valve port covers. Carefully inspect the O-ring seals in the side of the valve port cover. If the O-rings show any damage, replace them. Be certain that the replacement O-rings are properly installed and seated. Visually inspect the valve quick disconnect nipples and replace them, if necessary.

12. Remove closure lid bolts. Attach the lid lift slings to the closure lid. Remove the closure lid and set it on a support that is suitable for radiological control and for maintaining the cleanliness of the closure lid. Carefully inspect the Teflon O-ring seal in the underside of the closure lid. If the O-ring shows any damage, replace it. Remove the metallic O-ring and replace it with an approved spare. Be certain that the replacement O-rings are properly installed and seated. Inspect the lid bolts and replace any that are damaged.

13. Visually inspect the inner cavity for foreign material or damage. Install, or verify the presence of the proper drain tube and drain alignment ring.

14. Attach lift slings to the transfer cask adapter. Lift for inspection.

15. Visually verify that the mating surface of the cask adapter is free from debris.

16. Carefully lower the adapter onto the cask positioning the adapter match mark lines with the cask lifting trunnions and cavity drain.

17. Attach the four retention clamps over the cask front trunnions.

18. Attach lift sling to transfer cask adapter ring and carefully place it over the opening in transfer cask adapter.

19. Identify the TRIGA fuel baskets to be loaded. Modular baskets consisting of one base unit, three intermediate units, and one top unit, each capable of holding 24 TRIGA type fuel elements, may be loaded into the cask cavity. The base unit must be the first unit loaded and the top unit must be the last unit loaded. The intermediate modules may be loaded in any of the other loading operations. If the poisoned basket Configuration 2 is used, ensure that the TRIGA fuel spacer is attached to the NAC-LWT lid. To install the fuel spacer, orient the bolt in the hole positioned immediately below the center arc shaped clearance on the edge of the spacer and place the bolt in the hole marked "top of cask" adjacent to the hole. Install the remaining three bolts and torque bolts to 40 foot-pound If TRIGA fuel cluster rods are to be transported, ensure that fuel rod inserts are placed into each cell location that will contain fuel cluster rods. For the GA IFM basket load, install the GA IFM spacer, shown on NAC drawing 315-40-123, prior to inserting the loaded GA IFM top module.

    Note: When utilizing nonpoisoned TRIGA baskets, visually verify that the center blocking plate is welded in place.

When utilizing poisoned TRIGA baskets, visually inspect each cell of each basket module for foreign material or damage and verify the presence of the neutron poison material (borated stainless steel plates) as shown on NAC Drawings 315-40-080, -081, and -082.

When utilizing the GA IFM top module, follow the TRIGA loading procedure below, noting that this is a single basket load.

20. Load the TRIGA fuel basket module into the on-site transfer cask.

21. Allow the TRIGA fuel basket module to drain in the transfer cask and close the gate. Perform exterior decontamination of transfer cask to on-site limits.

22. Move the transfer cask to the shipping cask dry loading area and align with transfer cask adapter ring.

23. Place the transfer cask (containing the fuel basket module) onto the adapter noting the position of the match mark lines between the adapter and transfer cask.

24. Open the cask adapter gate.

25. Open the transfer cask gate.

26. Lower the fuel basket from the transfer cask into the shipping cask.

27. Disengage grapple and retract back into the transfer cask.

    Note: Grapple release can be verified by checking cable for tension.

28. Verify grapple is fully retracted.

    Note: Indication will be physical indicator attached to cable.

29. Close cask adapter gate.

30. Close transfer cask gate.

31. Repeat steps 20-30 for each intermediate basket module and for the top basket module as necessary, substituting a fourth intermediate module for the top module in the poisoned basket Configuration 2.

32. Attach lift sling to transfer cask adapter ring and carefully remove the adapter ring.

33. Attach lift sling to closure lid and position just above cask adapter gate and match lines for radial position. If using the poisoned basket Configuration 2, ensure that the TRIGA fuel spacer is oriented correctly on the closure lid (i.e., the drain line clearance is in line with the location of the drain line) and in accordance with the installation described above.

34. Open the cask adapter gate.

35. Carefully lower the closure lid into position and visually verify that it is properly seated.

    Note: If using poisoned basket Configuration 2, verify that the TRIGA fuel spacer does not interfere with the alignment pins in the upper most intermediate basket.

36. Attach lift sling to transfer cask adapter. Remove four retention clamps from the cask trunnions.

37. Carefully remove transfer cask adapter and position for subsequent decontamination.

38. Install and tighten all 12 closure bolts to 260 ± 20 ft-lbs in three passes, using the torque sequence stamped on the closure lid.

39. Connect a gas supply line to the vent valve and the drain line to the drain valve.

40. Open the gas supply valve and pressurize the cask cavity to force out the water. Blow gas through the cask cavity for at least 5 minutes after the last visible traces of water disappear from the drain line. Remove the drain and gas supply lines and attach the vacuum pump to the cask vent valve.

41. Evacuate the cask cavity to one-half the vapor pressure of water (p) (≤ 9mm of mercury) and maintain for a minimum of 15 minutes (for an ambient temperature of 70°F). (If the ambient temperature is different, use one-half the vapor pressure of water at the ambient temperature (1/2 p) and hold for a minimum of 15 minutes.)

42. Stop the vacuum pump and monitor the cask cavity pressure for at least 10 minutes. If the pressure rise is less than 1/4 p, the cask is adequately dried for shipment. If not, reperform steps 41 and 42.

43. Remove the vacuum pump and backfill the cask cavity with helium to 1 atmosphere (absolute), +1, -0.

44. Perform the helium mass spectrometer leak test on the cask lid in accordance with the requirements of Section 8.1.3.1, Steps 3 through 10.

45. Remove the gas supply line.

46. For standard and alternate port cover configurations, place the port covers over the vent and drain valves. Install and tighten the port cover bolts to 100 ± 10 in-lbs. Using the pressure test fixture, including a calibrated vacuum/pressure gauge with a minimum sensitivity of 0.25 psi, pressurize the annulus between the two port cover seals to 15 +1/-0 psig through the pressure test port located on the valve port cover. Observe the air pressure gauge for at least 10 minutes after closing the isolation valve.

    If no drop in air pressure is observed, the port cover test is acceptable and meets the minimum preshipment leakage rate of 1×10^{-3} ref cm^3/sec. If the air pressure drops, remove the valve port cover and replace the seals. Reinstall the cover and test in accordance with the requirements of Section 8.1.3.2. Repeat the test on each valve port cover.

    Note: If the O-rings have been replaced, the port cover must be tested in accordance with the requirements of Section 8.1.3.2.

47. For Alternate B port cover configuration, if used, perform the leakage rate test as described in Section 8.1.3.3.2.

48. Decontaminate the shipping cask and install the weather seal.

49. Verify lift yoke arm guides are removed and attach lifting yoke to the front trunnions.

50. Remove the cask to dry loading station tie-downs.

51. Lift and transfer the cask to the trailer. Carefully lower the cask until engagement of the cask cut-outs with the rear rotation trunnions. Gently lower the cask to rest on the front tie-down saddle, moving the crane and/or trailer, as required, to maintain cask engagement to the trailer and crane cables vertical.

52. Disengage the lifting yoke from the cask trunnions and set it aside.

53. Install the cask tie-down strap. Install the cask top and bottom impact limiters.

54. Install a tamper-indicating seal on a top attachment point of the top impact limiter.

55. Install the ISO container lid.

56. Complete a radiation and contamination survey on the external surfaces of the package and record the data. Ensure removable contamination and radiation dose rate survey results of the package comply with the limits specified in 10 CFR 71.87(i) and (j).

57. Measure the dose rate in millirems per hour at one meter from the package surface to determine the Transport Index (TI). Indicate the TI on the Radioactive Material labels applied to the package in accordance with 49 CFR 172 Subpart E. If TI is greater than 10, the package shipment is required to be as "exclusive use."

58. In accordance with the Certificate of Compliance, and indicate the correct CSI on the Fissile Material label applied to the package.

59. Apply appropriate placards to the transport vehicle in accordance with 49 CFR 172 Subpart F.

60. Complete the shipping documents and provide the carrier with written instructions regarding the requirements for maintaining an exclusive use shipment, if required.

7.1.7 Procedure for Loading TRIGA Failed Fuel or Fuel Debris into TRIGA Sealed Failed Fuel Cans

1. Examine the sealed failed fuel can (can) body and inspect for damage. Verify that the lid sealing surface is clean and free of defects. Visually verify that the drain plug seal is installed and the drain plug is partially threaded into the drain plug adapter to allow for draining.

2. Lower the can into the pool and position it for fuel loading.

3. Load the failed TRIGA fuel or fuel debris into the can. Verify that no more than the equivalent of 2 fuel elements or 6 fuel cluster rods are loaded into the can. Visually verify that there is no debris in the lid sealing surface and thread areas.

4. Examine the can lid and inspect for damage. Visually verify that the sealing surface is clean and free of defects. Lubricate the lid bolts, install the lid seal and verify that the lid valve is in the open position and the valve lock set screw is retracted.

5. Attach the testing hose to the lid test connection and ensure that the fitting is properly seated.

6. Install the lid and torque the lid bolts to 150 ± 10 inch-pound.

   Note: Torque any two diametrically opposed bolts first, then torque the remaining two bolts. Complete the torque sequence by verifying the torque of all four bolts in a clockwise direction.

7. Pressurize the can with air or helium to remove the water. Continue the purge for at least 5 minutes after bubbles appear from the base of the can.

8. Access and torque the drain plug to 50 ± 10 inch-pound.

9. Evacuate the can to a pressure below 1 inch of mercury and hold for a minimum of 15 minutes.

10. Stop the vacuum pump and monitor the pressure for at least 10 minutes. If the pressure rise is less than ¼ inch of mercury, the can is adequately dried for shipment. If not, repeat steps 9 and 10.

11. Backfill the can with helium to a pressure of 1 atmosphere (0 psig).

12. Shut and lock the lid valve.

13. Disconnect the testing hose from the lid test connection.

14. The sealed failed fuel can is now ready for loading into a TRIGA basket module.

7.1.8 Procedure for Wet Loading of PWR/BWR Fuel Rods into the PWR/BWR Transport Canister

The PWR/BWR transport canister has three configurations: sealed canister, screened canister, and free-flow canister. All three canister configurations may be used to contain either intact or damaged fuel rods, or a combination of both damaged and intact fuel rods. The loaded transport canisters are loaded into the NAC-LWT cask containing a LWT PWR basket assembly with an appropriate bottom weldment spacer. For transport canisters containing any damaged fuel rod contents, a can and an insert spacer are required to be installed and bolted to the underside of the closure lid to limit the axial movement of the canister. The use of the can and insert spacer

requires the use of the PWR basket assembly fitted with the Alternate B spacer. Transport canisters containing intact rods may be placed in any of the three types of PWR basket assemblies. Upon completion of loading the transport canister, the canister and the insert spacer are loaded, either together or individually, into the basket assembly in a manner similar to loading a PWR assembly.

1. If the transport canister is to be shipped in a sealed configuration, verify the five drain plugs are installed and torqued to 50 ± 2 foot-pound. If the transport canister is to be shipped in the free flow configuration, verify the five drain plugs are not installed. If the transport canister is to be shipped in the screened configuration, verify the screened plugs are installed and torqued to 50 ± 2 foot-pound in the bottom of the canister.

2. Lower the transport canister (and insert) into the fuel pool for loading.

3. Load the spent fuel rods into the transport canister in accordance with site-specific procedures. Separate failed fuel rod capsules may be used to contain either intact or damaged fuel rods within the canister. The capsules are intended to limit dispersal of radioactive material to the canister internals. Visually upon completion of loading, verify that there is no debris on the lid sealing surface and threaded areas.

4. Using the appropriate lid (sealed, screened or free-flow), examine and inspect for damage. Visually verify that the sealing surface is clean and free of defects. Lubricate the lid bolts.

5. Install the lid and torque the lid bolts to 35 ± 5 inch-pound.

   Note: Torque any two diametrically opposed bolts first, then torque the remaining six bolts. Complete the torque sequence by verifying the torque of all eight bolts in a clockwise direction.

6. If the transport canister is being shipped in either the screened or free-flow configuration, it is now ready for shipment and shall be loaded into the NAC-LWT cask in accordance with section 7.1.1, Procedures for Wet Loading of LWR Fuel. If the transport canister is being shipped in the sealed configuration, complete steps 7-13 of this section.

7. Connect vent and drain lines to the respective quick-disconnect fittings on the sealed transport canister lid. The drain hose discharge should be directed to the plant drain system for radiological wastewater or another appropriate collection point.

8. Pressurize and purge the transport canister using helium. (Caution do not exceed 25 psig while dewatering the transport canister.) Secure the purge once no fluid is observed exiting the discharge for at least 10 minutes.

9. Disconnect the drain line from the lid. Connect the vent line to a suitable vacuum pump.
10. Evacuate the transport canister cavity to one half the vapor pressure of water (p) (≤ 9 mm of mercury = 1/2 p) and maintain for a minimum of 15 minutes for a spent-fuel pool temperature of 70°F. (If the spent-fuel pool is at a different temperature, reduce the cask pressure to one half the vapor pressure of water at the pool temperature (1/2 p) and hold for a minimum of 15 minutes.) Stop the vacuum pump and monitor the transport canister cavity pressure for at least 10 minutes. If the pressure rise is less than 1/4 p, the transport canister is adequately dried for shipment. If not, continue to vacuum dry the canister per this step until canister dryness is confirmed.
11. Secure the vacuum pump and backfill the transport canister cavity with helium to 1 atm.
12. Disconnect the vent line from the transport canister.
13. The sealed transport canister is now ready for shipment and shall be loaded into the NAC-LWT cask in accordance with Section 7.1.1, Procedures for Wet Loading of LWR Fuel.

7.1.9 Procedure for Wet Loading of TPBAR Consolidation Canister into the NAC-LWT Cask

This section describes the procedures for loading the NAC-LWT with a TPBAR consolidation canister. The consolidation canister can contain up to 300 TPBARs, two of which may be prefailed. Dunnage (i.e., spacer grids, stainless steel tubes, etc.) may be used in consolidation canisters containing fewer than 300 TPBARs. The total weight and volume of the contents (i.e., dunnage and reduced number of TPBARs) must be less than, or equal to, the weight and volume of the full load of 300 TPBARs.

Appropriate radiological controls and procedures addressing tritium shall be utilized by the licensee, including appropriate personnel monitoring for tritium exposure.

NAC-LWT casks to be used for the transport TPBARs shall be configured as shown on Drawing No. 315-40-128, including Alternate B port covers.

1. Perform a receiving survey of the empty cask and inspect for damage. Verify, by cask serial number, that the cask is configured, tested and approved for TPBAR contents.

2. Position the trailer in the designated area. Set the trailer brakes and block the wheels against movement in either direction, unless site-specific conditions require the trailer to move as the cask is raised or lowered.

3. Remove the roof from the ISO container and open the front and rear ISO doors. Remove roof cross members, if installed.
   Note: Verify that the package identification number on the nameplate displays Type B(M)-96.

4. Perform a Health Physics survey of the cask and adjacent surfaces of the trailer.
   Note: A receiving survey of the cask and transporter must be performed as soon as practical after arrival at the site to assure compliance with 10 CFR 20 and 49 CFR 173. If contamination levels exceed 49 CFR 173.443 limits, the licensee shall notify the shipper and ensure the appropriate notifications are completed.

5. Remove the top and bottom impact limiters.

6. Remove the cask tiedown strap.

7. Using the cask lifting yoke without the lift yoke arm guides removed, engage the lifting trunnions at the top end of the cask. Raise the cask to a vertical position on the rear cask support moving the crane and/or trailer, as required, to keep the cask engaged in the trailer rear rotation supports. When the cask is vertical, block the trailer wheels and lift the cask from the trailer.

8. Place the cask in the designated cask preparation area. Disengage the lifting yoke. Clean cask surfaces of road dirt as required for entry into the spent fuel pool.

9. Remove the Alternate B vent and drain valve port covers. Replace the metallic seal with an approved spare and inspect the Viton® O-ring seal for each port cover. If the Viton® O-ring shows any damage, replace it. Ensure the replacement O-rings are properly installed and seated. Store the port covers to protect the seal surfaces. Visually inspect the vent and drain valved quick disconnect nipples and replace them, if necessary.

10. Remove closure lid bolts and store to prevent damage. Attach the lid lift slings to the closure lid. Remove the closure lid and set it on a support that is suitable for radiological control and for maintaining the cleanliness of the closure lid. Carefully inspect the Teflon O-ring seal in the underside of the closure lid. If the O-ring shows any damage, replace it. Remove the metallic O-ring and replace it with an approved spare. Ensure the replacement O-rings are properly installed and seated. Inspect the lid bolts and replace any that are damaged. Verify that the TPBAR spacer is installed on the bottom of the cask lid and was not damaged when the lid is set down.

11. Visually inspect the inner cavity for foreign material or damage. Install or verify the presence of the standard drain tube and the TPBAR basket assembly.

12. Fill the cask cavity with clean water. Install lift yoke arm guides on the lifting yoke.

13. Engage the cask lifting yoke with the cask lifting trunnions and pick up the cask. Carefully lower the cask to the bottom of the spent fuel pool.

14. Disengage the lifting yoke from the cask and remove the yoke from the pool.

15. Identify the TPBAR consolidation canister to be loaded and verify the TPBAR contents comply with the content conditions of the CoC.

16. Engage and lift the consolidation canister using the required grapple system.

17. Position the container over the cask and carefully lower it into the cask to avoid damage to the cask sealing surfaces. Orient the canister bail so that it is aligned with the drain tube location to allow engagement with the lid spacer. Confirm that the container is fully seated, then release and remove the grapple from the cask cavity.

18. Position the cask lifting yoke over the cask closure lid. Attach the slings to the closure lid and cask lifting yoke. Lower the yoke over the cask.

19. Position the closure lid over the cask and slowly lower it into place allowing the consolidation canister bail to engage with the TPBAR spacer on the bottom of the lid. Use the cask and lid match marks as guides to properly align the lid. Visually confirm that the closure lid is seated.

20. Lower the cask handling yoke to slack the closure lid cables. Engage the cask lifting trunnions with the yoke and begin lifting.
    Note: At least two persons should verify the yoke engagement before lifting the cask.

21. Raise the cask until the lid is slightly above the surface of the pool, then install and hand tighten each of the 12 closure lid bolts.

22. Raise the cask clear of the pool, while rinsing the yoke and cask with clean water.

23. Transfer the cask to the designated cask preparation area. Remove the yoke and lid lift slings.

24. Tighten all 12 closure lid bolts to 260 ± 20 ft-lb in three passes, using the torque sequence stamped on the closure lid.

25. Connect a valved clean water line to the drain valve and a valved drain line to the vent valve. Flush the cask with two cask volumes (approximately 200 gallons) of clean water. Disconnect the water supply line.

26. Connect a helium or nitrogen gas supply line to the vent valve and the drain line to the drain valve.

27. Open the gas supply valve and pressurize the cask cavity to force out the water. Blow gas through the cask cavity for at least 5 minutes after water discharge is complete. Remove the drain and gas supply lines and attach the vacuum pump to the cask vent valve.
    Note: Ensure the vacuum pump exhaust is routed to minimize potential exposure of operating personnel to tritium contaminated vapor.

28. Evacuate the cask cavity to one half the vapor pressure of water (p) ($\leq$ 9 mm of mercury) for a spent-fuel pool temperature of 70°F and continue vacuum pumping for at least 15 minutes.
    Note: If the spent fuel pool is at a different temperature, reduce the cask cavity pressure to one-half the vapor pressure of water at the pool temperature (1/2 p) and continue pumping for at least 15 minutes.

29. Isolate and stop the vacuum pump, and monitor the cask cavity pressure for at least 10 minutes. If the cavity pressure rise is less than 1/4 p, the cask is adequately dried for shipment. If not, repeat Steps 28 and 29 until the cavity dryness is verified.

30. Perform the helium mass spectrometer maintenance leakage rate test on the cask lid to leaktight criteria in accordance with the requirements of Section 8.1.3.1, Steps 3 through 10.

31. Following successful completion of the helium backfill and helium leak testing of the lid seal, monitor the cavity volume for tritium and record the results.
    Note: Tritium monitoring system shall have a minimum sensitivity of 5×10^{-3} micro curie/cc.

32. Install Alternate B port covers on the vent and drain openings and torque each port cover bolt to 285 ± 15 in-lbs. Then perform a helium leakage rate test on each port cover to leaktight criteria in accordance with Section 8.1.3.3.

33. Decontaminate the cask. Survey the cask for surface contamination and radiation dose rates.
    Note: Ensure compliance with 10 CFR 71.87(i) and 10 CFR 71.47.

34. Remove lift yoke arm guides. Then, using the cask lifting yoke, transfer and lower the cask to the rear cask support on the trailer. Engage the trunnion pockets in the bottom end of the cask with the rotation trunnions. Lower the cask to rest on the front tiedown saddle, moving the crane, and/or trailer, as required, to keep the crane cables vertical. Disengage the cask lifting yoke from the cask lifting trunnions and set it aside.

35. Install the cask tiedown strap. Install the cask top and bottom impact limiters.

36. Install a tamper-indicating seal to a top impact limiter ball lock pin.

37. Install roof cross members, close ISO container doors, and replace ISO container roof.

38. Complete a Health Physics survey on the external surface of the package and record the results. Complete dose rate measurements at the cask surface, at 1 meter from the cask surface, and at 2 meters from the vertical plane of the side of the transport vehicle. The maximum dose rate at 1 meter from the cask is the transport index (TI). Ensure compliance with 10 CFR 71.87 (i) and observe the following criteria.

    - If the dose rate is less than 2 mSv/h (200 mrem/hr) at all accessible points on the external surface of the cask, and the TI is less than 10, the package must meet the requirements of 10 CFR 71.47 (a).

    - If the dose rate is greater than 2 mSv/h (200 mrem/hr), but is less than 10 mSv/h (1000 mrem/hr) at any point on the external surface of the package, or the TI is greater than 10, the package must be shipped as "exclusive use" and meet the requirements of 10 CFR 71.47 (b), (c) and (d). If the dose rate and shipping requirements of 10 CFR 71.47 (b), (1), (2), (3) and (4) cannot be met, the package cannot be shipped.

      Note: 10 CFR 71.47 (c) and (d) require the shipper to provide the carrier with written instructions for maintenance of the exclusive use shipment. The instructions must be included with the shipping paper information. The instructions must be sufficient so that, when followed, they cause the carrier to avoid actions that unnecessarily delay delivery or unnecessarily result in increased radiation levels or radiation exposures to transport workers or members of the general public.

- If the dose rate is > 10 mSv/h (1000 mrem/hr) at any point on the external surface of the cask, the cask exceeds the limits of 10 CFR 71.47 and cannot be shipped.

39. Complete the shipping document, carrier instructions (if required), and apply appropriate placards and labels.

7.1.10 Procedure for the Dry Loading of PULSTAR Fuel Into the NAC-LWT Cask

This section describes the procedures for loading the NAC-LWT cask with intact PULSTAR fuel assemblies, intact PULSTAR fuel rods in fuel rod inserts, and intact or damaged PULSTAR fuel assemblies, fuel rods, fuel debris, and nonfuel components of PULSTAR fuel assemblies in either sealed or screened PULSTAR cans. Up to 28 PULSTAR fuel assemblies, rod inserts, and sealed or screened cans can be loaded in the 28 MTR (four module × seven cells/module) basket assembly. The 28 MTR basket assembly consists of a base module, two intermediate modules, and a top module.

Damaged PULSTAR fuel assemblies, damaged fuel rods, fuel debris, and nonfuel components of fuel assemblies are required to be loaded in either a sealed failed fuel or screened PULSTAR can. Intact PULSTAR fuel rods may be loaded into either one of the cans at the option of the licensee. The PULSTAR cans are limited to being loaded in any cell in either the top or the base module. The top and base basket modules can also contain intact PULSTAR fuel assemblies and fuel rod inserts containing intact PULSTAR fuel rods.

The NAC-LWT cask will be loaded dry, utilizing a transfer cask for loading each of the four basket modules. The basket modules will be preloaded with the PULSTAR fuel contents. The damaged fuel cans will be preloaded, closed, drained and dried, if applicable, prior to loading in either the top or base basket module. The PULSTAR cans shall be loaded and prepared for transport in accordance with the applicable steps of Section 7.1.7.

The NAC-LWT dry PULSTAR fuel loading and preparation for transport procedures are as follows.

1. Perform a receipt inspection of the empty cask and trailer/ISO container, inspecting for transport damage.
2. Position the trailer in the designated cask unloading area. Set the trailer brakes and chock the wheels to prevent unintended movement. If site-specific conditions exist that

require the trailer to move to allow the cask to be uprighted on its rotation trunnions, release brakes and remove the chocks when required to complete uprighting operations. If an ISO container is used, it may be removed from the trailer and secured in the unloading area.

3. Remove the lid/top of the ISO container and remove any bracing.
4. Licensees shall monitor the package for radioactive contamination and radiation levels in accordance with 10 CFR 20.1906. If contamination levels exceed 10 CFR 71.87(i) or radiation levels exceed the limits of 10 CFR 71.47, the licensee shall notify the NRC Operations Center.
5. Remove the top and bottom impact limiters.
6. Remove the cask tie-downs.
7. Using the lifting yoke with the guides removed, engage the lifting trunnions. Raise the cask to vertical by rotating the cask rotation pockets on the rear cask supports, moving the crane and/or trailer as required to keep the lift yoke engaged to the trunnions and the cask engaged in the rear supports. When the cask is fully vertical, lift the cask from the supports and remove it from the trailer/container.
8. Place the cask into the dry loading station. Connect and tighten the cask to the loading station tie-downs, if required.
9. Disengage the lift yoke.
10. Remove the weather seal from the cask.
11. Remove the vent and drain port covers. Visually inspect O-ring seals and replace if damaged or worn. Verify proper seal replacement and installation. Visually inspect the vent and drain quick disconnect nipples. Remove and replace nipples if damaged and torque to 100 ± 10 inch-pounds.
12. Remove the closure lid bolts; inspect for damage and store. Replace any damaged lid bolts. Install the lid lift slings and remove the closure lid. Place the lid on a support suitable for inspection and replacement of the O-ring seals while maintaining proper radiological controls and cleanliness.
13. Visually inspect the cask cavity for foreign material or damage. Clean as necessary. Install or verify the presence of a correct drain tube assembly including alignment ring.
14. Install the shield ring.
15. Attach lift slings to the transfer cask adapter. Lift for inspection.
16. Visually verify that the adapter mating surface is free of debris.
17. Carefully lower the adapter onto the cask aligning the adapter match marks with the four cask trunnions and drain.

18. Attach the four adapter plate retention clamps over the trunnions.
19. Verify the adapter gate is closed.
20. If not previously installed, attach the lift slings to transfer adapter ring and carefully install it over the opening in the transfer cask adapter.
21. Identify the PULSTAR fuel assemblies, fuel rod holders, and fuel cans to be loaded. Four basket modules (e.g., one base module, two intermediate modules, and a top module) constitute the 28 MTR basket assembly. Spacers will be used as provided to position the PULSTAR fuel contents as required.
22. Each module is capable of containing up to seven intact fuel assemblies; fuel rod inserts or PULSTAR fuel can. Fuel cans are restricted to being loaded into the top and base modules, where the cans may be loaded with intact fuel assemblies or fuel rod holders without loading preference. There are no limitations on loading location for intact fuel assemblies or fuel rod holders in any of the four basket modules.

    The base module is loaded into the cask first, followed by the two intermediate modules and the top module is loaded last. Each basket module is loaded in the pool in sequence in a shielded transfer device, moved to a transfer station and loaded into the transfer cask in a free drained condition. The transfer cask is then lifted and positioned to interface with the transfer adapter.
23. Place the transfer cask containing the base module unit onto the adapter aligning the match marks.
24. Open the cask adapter gate.
25. Open the transfer cask gate.
26. Lower the fuel basket from the transfer cask into the NAC-LWT cavity using the transfer cask internal grapple.
27. Disengage the transfer cask grapple from the base module and retract it into the transfer cask.

    Note: Grapple release can be confirmed by checking grapple cable tension.
28. Close the adapter gate.
29. Close the transfer cask gate.
30. Repeat steps 21 through 29 to load the two intermediate modules and the top module.
31. Open the cask adapter gate and install the shield plug in the shielding.
32. Attach lifting slings to the transfer cask adapter ring and carefully remove it from the transfer cask adapter.
33. Remove the shield ring.
34. Remove and replace the containment boundary metallic O-ring in the closure lid. Inspect the Teflon secondary O-ring in the lid and replace it if it is damaged or worn.
35. Remove the shield ring/plug.

36. Attach lift slings to the closure lid and position the lid above the adapter gate using the match marks for alignment.
37. Open the cask adapter gate.
38. Carefully lower the closure lid into position and visually verify proper seating. Remove lid slings.
39. Attach lifting slings to the transfer cask adapter. Release the four retention clamps from the cask trunnions.
40. Carefully remove the transfer cask adapter from the top of the cask.
41. Install and torque the 12 closure lid bolts to 260 ± 20 ft-lb in three passes using the torquing sequence stamped on the lid.
42. Connect a gas supply line to the vent valve and a drain line to the drain valve.
43. Open the gas supply valve and pressurize the cask cavity (< 30 psig) to force any residual water out the drain line. Continue to supply pressurized gas to the cask for a minimum of five minutes after the last residual free water discharges form the drain. Remove the drain and gas supply lines and attach the vacuum drying system (VDS) to the vent.
44. Evacuate the cask cavity to less than or equal to 10 torr (1 torr=1 mm Hg) and continue vacuum pumping for a minimum of 15 minutes.
45. At the end of the vacuum pumping period, isolate the cask cavity from the vacuum pump and stop the vacuum pump, and monitor the cask cavity pressure for a minimum of ten minutes. If the pressure rise is less than 5 torr, the cavity is dried of any free water. If pressure rise is >5 torr, repeat steps 44 and 45 until the dryness check results are satisfactory.
46. Backfill the cask cavity with helium to 0 psig (1 atmosphere, absolute) and disconnect the VDS from the vent valve.
47. Perform a helium leakage test of the closure lid containment O-ring using a Helium Mass Spectrometer Leak Detector (He MSLD) in accordance with the procedural requirements of Section 8.1.3.
48. Install the vent and drain port covers and torque the bolts to 100 ±10 inch-pounds.
49. If a port cover containment O-ring seal was replaced, perform a helium leakage test on the affected port cover using a He MSLD in accordance with the requirements of 8.1.3.
50. If the port cover containment seal was inspected and accepted for re-use, perform an air pressure drop leakage test on the affected port cover as follows.
    a. Install a pressure test fixture to the port cover test port including a calibrated pressure gauge with a minimum sensitivity of 0.25 psi.
    b. Pressurize the port cover seal annulus to 15 psig.
    c. Isolate the gas supply and observe the pressure gauge for a minimum of six minutes.

d. The acceptance criterion for the test is no drop in pressure during the minimum test time. An acceptable test assures that the minimum assembly verification leakage test sensitivity is achieved.

51. Decontaminate the shipping cask and install the weather seal.
52. Connect the lifting yoke to the cask crane hook and engage lifting yoke arms to the cask lifting trunnions.
53. Remove the dry loading station tie-downs.
54. Lift the cask and position the cask rotation cutouts in the rear rotation trunnions of the rear support structure. Carefully lower the cask to the horizontal transport orientation resting on the front saddle by moving the crane and/or the trailer as required to maintain cask engagement to the rear supports.
55. Disengage the lifting yoke from the lifting trunnions and remove it from the area.
56. Install the cask tie-downs. Install the top and bottom impact limiters.
57. Install tamper seal wire and number seal on the top attachment point on the top impact limiter.
58. Install ISO container bracing and lid.
59. Complete radiation and contamination surveys of the external surfaces of the package and record the data. Ensure removable contamination and radiation dose rate survey results comply with the limits specified in 10 CFR 71.87(i) and (j).
60. Measure the dose rate in millirems per hour at one meter from the package surface to determine the Transport Index (TI). Indicate the TI on the Radioactive Material labels applied to the package in accordance with 49 CFR 172, Subpart E.
61. Determine the appropriate Criticality Safety Index (CSI) assigned to the package contents in accordance with the Certificate of Compliance, and indicate the correct CSI on the Fissile Material label applied to the package per 49 CFR 172, Subpart E.
62. Apply appropriate placards to the transport vehicle in accordance with 49 CFR 172, Subpart F.
63. Complete the shipping documents and provide the carrier with instructions regarding the requirements for maintaining an exclusive use shipment.

7.1.11 Procedure for Dry Loading of TPBAR Waste Container

This section describes the procedure for the loading of a TPBAR Waste Container into a NAC-LWT cask in a dry loading facility. Appropriate radiological controls and procedures addressing tritium shall be utilized by the licensee, including appropriate monitoring for tritium exposure.

NAC-LWT casks to be used for the transport of TPBARs shall be configured as shown on Drawing No. 315-40-128, including Alternate B port covers.

1. Perform a receiving survey of the ISO and trailer, and inspect for damage.
2. Position the trailer in the designated cask unloading area. Set the trailer brakes and chock the wheels to prevent unintended movement. If site-specific conditions exist that require the trailer to move to allow the cask to be uprighted on its rotation trunnions, release the brakes and remove the chocks when required to complete the uprighting operations. If necessary, the ISO container may be removed from the trailer and secured in the unloading area.
3. Licensees shall receive and survey the package for radiation and removable contamination (for both gross beta-gamma and tritium) per 10 CFR 20 and 49 CFR 173. Record the survey results. If radiation or contamination levels exceed the limits of 49 CFR 173.441 or 173.443, respectively, the licensee shall notify the shipper and ensure the appropriate notifications are completed.
4. Remove the roof from the ISO container and open the front and rear ISO doors. Remove the ISO roof cross members, if installed.
5. Remove the top and bottom impact limiters.
6. Remove the cask tie-down strap. Complete the radiation and contamination surveys of the package as additional surfaces become accessible. Clean the cask surfaces as required for entry into the dry loading facility.
7. Using the cask lifting yoke with lift yoke arm guides removed, engage the lifting trunnions of the front end of the cask. Raise the cask to a vertical position on the rear cask supports, moving the crane and/or trailer, as required, to keep the cask engaged in the rear cask supports and the crane cable vertical. When the cask is vertical, block the trailer wheels and lift the cask from the container.
8. Place the cask in a transfer cart or a loading fixture. Disengage the lifting yoke.
9. Remove the weather seal from the cask lid.
10. Remove the Alternate B vent and drain valve port covers. Replace the metallic seal with an approved spare and inspect the Viton® O-ring seal on each cover. If the Viton® O-ring shows any damage, replace it. Ensure the replacement O-rings are properly installed and seated. Store the port cover to protect the seal surfaces. Visually inspect the vent and drain valved quick-disconnect nipples and replace, if necessary.
11. Loosen and remove all closure lid bolts.

12. Attach the lid removal fixture to the closure lid.
13. Use a transfer cart or loading fixture and move the cask into the loading position.
14. Remove the closure lid and set it on a support that is suitable for radiological control and for maintaining the cleanliness of the closure lid. Carefully inspect the Teflon O-ring seal in the underside of the closure lid. If the O-ring shows any damage, replace it. Remove the metallic O-ring and replace it with an approved spare. Ensure the replacement O-rings are properly installed and seated. Inspect the lid bolts and replace any that are damaged. Verify that the TPBAR spacer is installed on the bottom of the cask lid and not damaged when the lid is set down.
15. Install the seal surface protector in the lid cavity, if required.
16. Load the TPBAR Waste Container into the TPBAR basket positioned in the cask cavity using the required grapple or handling system. Verify the contents of the Waste Container comply with the CoC content conditions.
17. Remove the cask seal surface protector, if used, and install the cask closure lid.
18. Use the transfer cart or loading fixture and remove the cask from the loading area.
19. Inspect, install and tighten all 12 closure lid bolts to 260 ± 20 ft-lbs in three passes using the torque sequence indicated on the closure lid.
20. Connect a vacuum pump to the cask vent valve.
21. Install the drain port cover, if drain valve is not required for operations, and torque the port cover bolts to 285 ± 15 in-lbs.
22. Perform the helium mass spectrometer maintenance leakage rate test on the cask lid to leaktight criteria in accordance with the requirements of Section 8.1.3.1, Steps 3 through 10.
23. Following successful completion of the helium backfill and helium leak testing of the lid seal, monitor the cavity volume for tritium and record the results.

    Note: Tritium monitoring system shall have a minimum sensitivity of 5×10^{-3} micro curies/cc.
24. Install Alternate B port covers on the vent and drain openings and torque each port cover bolt to 285 ± 15 in-lbs. Perform a helium leakage rate test on each port cover to leaktight criteria in accordance with Section 8.1.3.3.

25. Decontaminate the cask. Survey the cask surface for gross beta-gamma and tritium removable contamination levels, and radiation dose rates.

    Note: Removable contamination levels and radiation levels shall comply with 49 CFR 173.443 and 173.441, respectively.

26. Using the cask lifting yoke with the guide arms removed, lift and position the cask in the rear cask supports on the ISO/trailer. Engage the trunnion pockets in the bottom end of the cask with the rotation trunnions. Lower the cask to rest on the front tiedown saddle, moving the crane, and/or trailer, as required, to keep the crane cables vertical. Disengage the cask lifting yoke from the cask lifting trunnions and set it aside.

27. Install and attach the cask tiedown strap. Install the cask top and bottom impact limiters.

28. Install a tamper-indicating seal to one of the top impact limiter ball lock pins.

29. Install roof cross members, close ISO container doors, and replace ISO container roof.

30. Complete a Health Physics survey on the external surface of the package and record the results. Complete dose rate measurements at the cask surface, at 1 meter from the cask surface, and at 2 meters from the vertical plane of the side of the transport vehicle. The maximum dose rate at 1 meter from the cask is the transport index (TI). Ensure compliance with 10 CFR 71.87(i) and observe the following criteria.

    - If the dose rate is less than 2 mSv/h (200 mrem/hr) at all accessible points on the external surface of the cask, and the TI is less than 10, the package must meet the requirements of 10 CFR 71.47 (a).
    - If the dose rate is greater than 2 mSv/h (200 mrem/hr), but is less than 10 mSv/h (1000 mrem/hr) at any point on the external surface of the package, or the TI is greater than 10, the package must be shipped as "exclusive use" and meet the requirements of 10 CFR 71.47 (b), (c) and (d). If the dose rate and shipping requirements of 10 CFR 71.47 (b), (1), (2), (3) and (4) cannot be met, the package cannot be shipped.

    Note: 10 CFR 71.47 (c) and (d) require the shipper to provide the carrier with written instructions for maintenance of the exclusive use shipment. The instructions must be included with the shipping paper information. The instructions must be sufficient so that, when followed, they cause the carrier to avoid actions that unnecessarily delay delivery or unnecessarily result in increased radiation levels or radiation exposures to transport workers or members of the general public.

    - If the dose rate is > 10 mSv/h (1000 mrem/hr) at any point on the external surface of the cask, the cask exceeds the limits of 10 CFR 71.47 and cannot be shipped.

31. Complete the shipping document, carrier instructions (if required), and apply appropriate placards and labels.