Recommendations for Critical Flaw Size Calculations

(in Wolf Creek Advanced FEA Project)

By

Peter C. Riccardella

May 8, 2007

Structural Integrity Associates, Inc.

Summary of Key Issues from [1]

(Reference list on last slide)

- EPFM vs. Limit Load
- Material Properties for Use in Evaluation
- Inclusion of Secondary Stresses

EPFM vs. Limit Load

- Plot of data from Battelle/NRC Full Scale Pipe Tests on SS and A-600 indicates that Limit Load (ANSC) works well for all flaw types tested
- Comparison of Fracture Toughness (J-R Curves) indicates Alloy 182 not significantly less tough than tested materials
- DPZP screening criteria [2] adapted to complex crack tests gives reasonable results
  - Can be used to screen current analyses of A-182 for appropriate analysis type

Limit Load (ANSC) Applied to Battelle/NRC Full Scale Pipe Tests [4, 5]

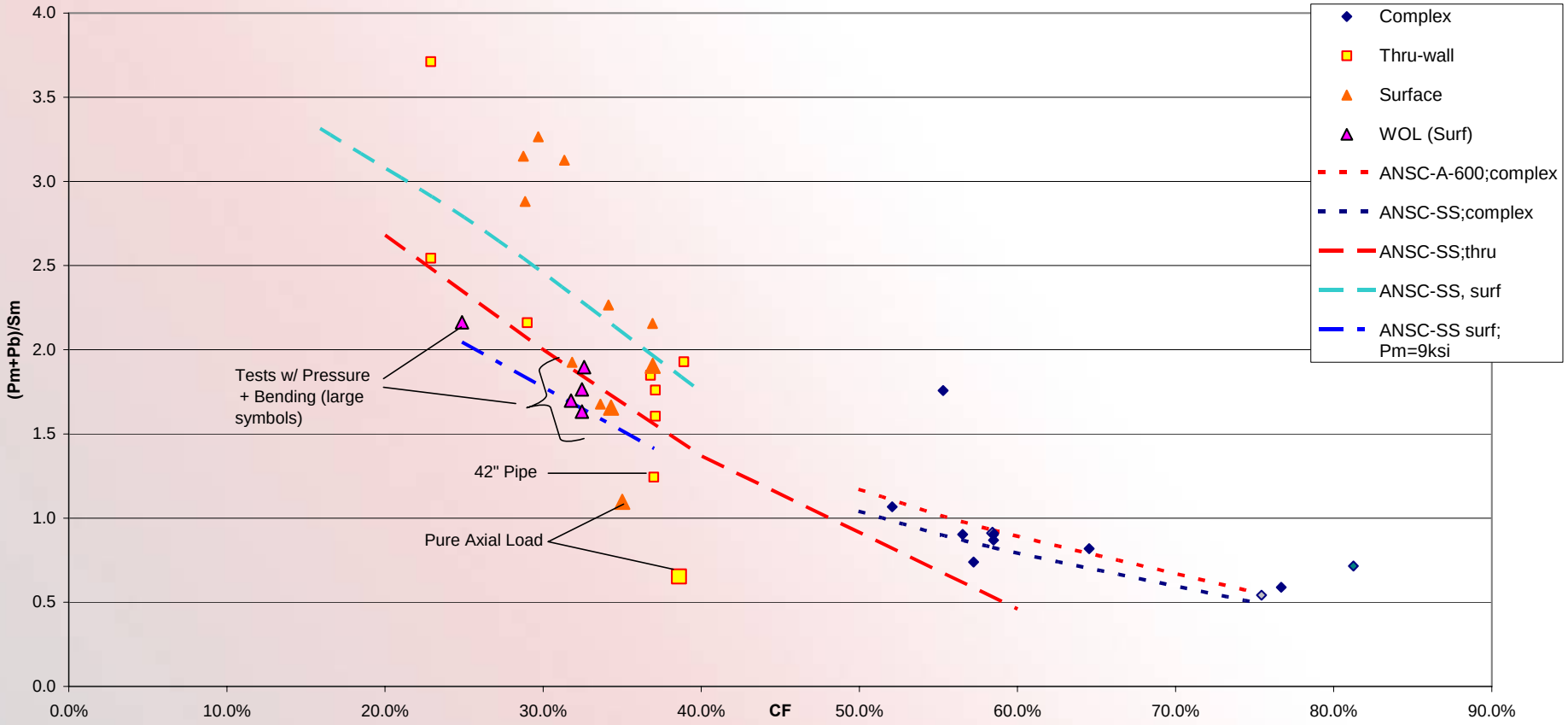

Structural Integrity Associates, Inc.

Definition of Various Flaw Types Tested [4]

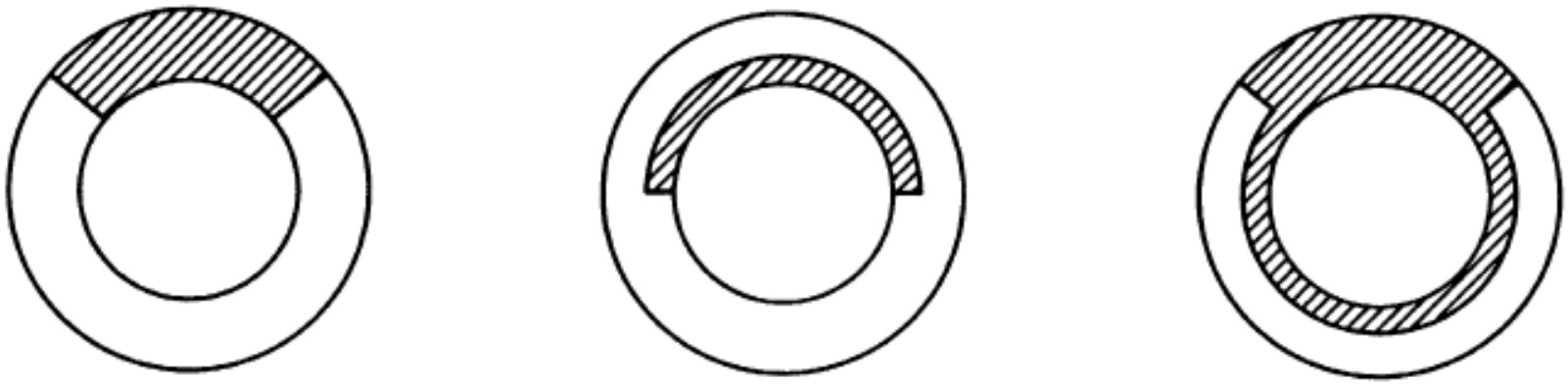

(a) Simple Through-Wall Crack

(b) Internal Surface Crack

(c) Complex Crack

Compilation of J-R Curve Toughness Data for Relevant Materials [4-7]

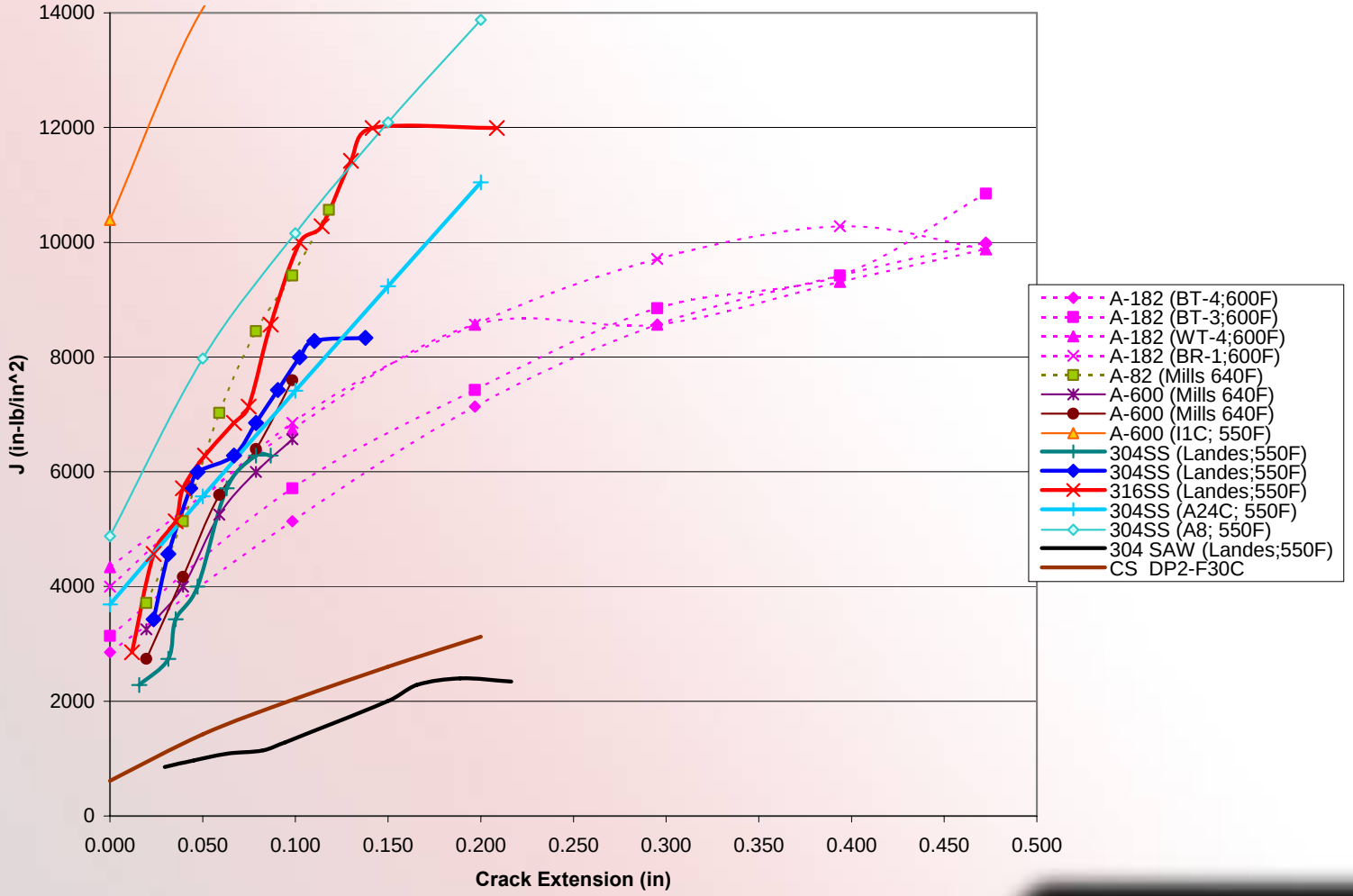

Structural Integrity Associates, Inc.

Dimensionless Plastic Zone (DPZP) Screening Parameter [2]

For through-wall cracked pipe in pure bending, this plastic-zone parameter is

$$\text{Plastic-Zone Parameter} = \left(\frac{EJ_i}{2\pi\sigma_f^2}\right) \Big/ \left(\frac{\pi-\alpha}{4}\right)D$$

and for surface-cracked pipe in pure bending, it is

$$\text{Plastic-Zone Parameter} = \left(\frac{EJ_i}{2\pi\sigma_f^2}\right) \Big/ \left[\left(\frac{\pi+(d/t)\alpha}{\pi}\right)\frac{D\pi}{4}\right].$$

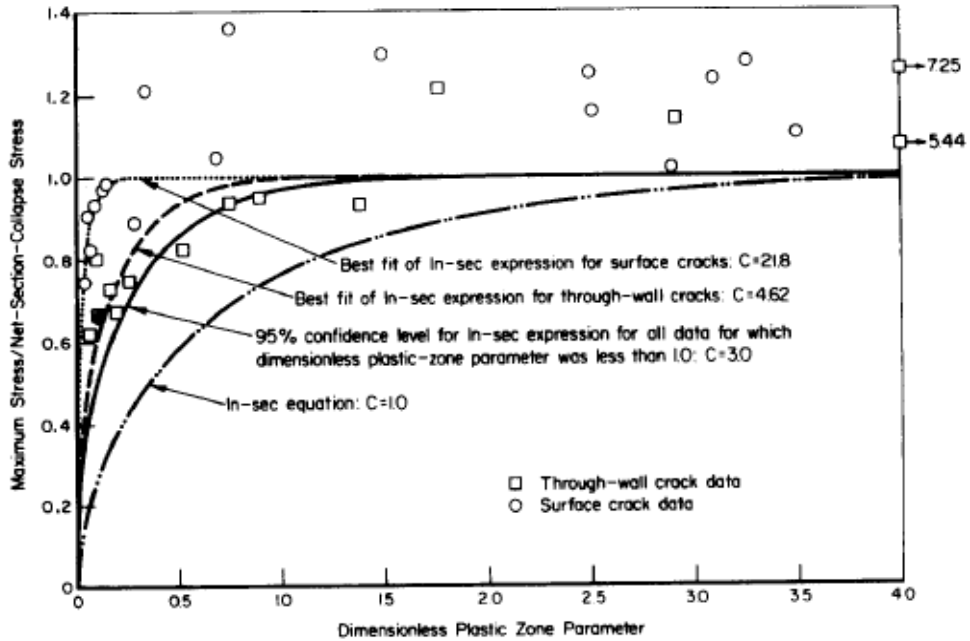

where:

α = ½ crack angle of through-wall crack

d/t = fractional depth of surface crack

D = OD of pipe

DPZP Screening Criteria Adapted to Complex Cracks

$$DPZP = (EJ_i / 2\pi\sigma_f) \Big/ \{\pi - [\alpha + d/t\,(\pi - \alpha)]\}D/4$$

where:

α = ½ crack angle of through-wall portion of crack

d/t = fractional depth of part through wall portion

D = OD of pipe

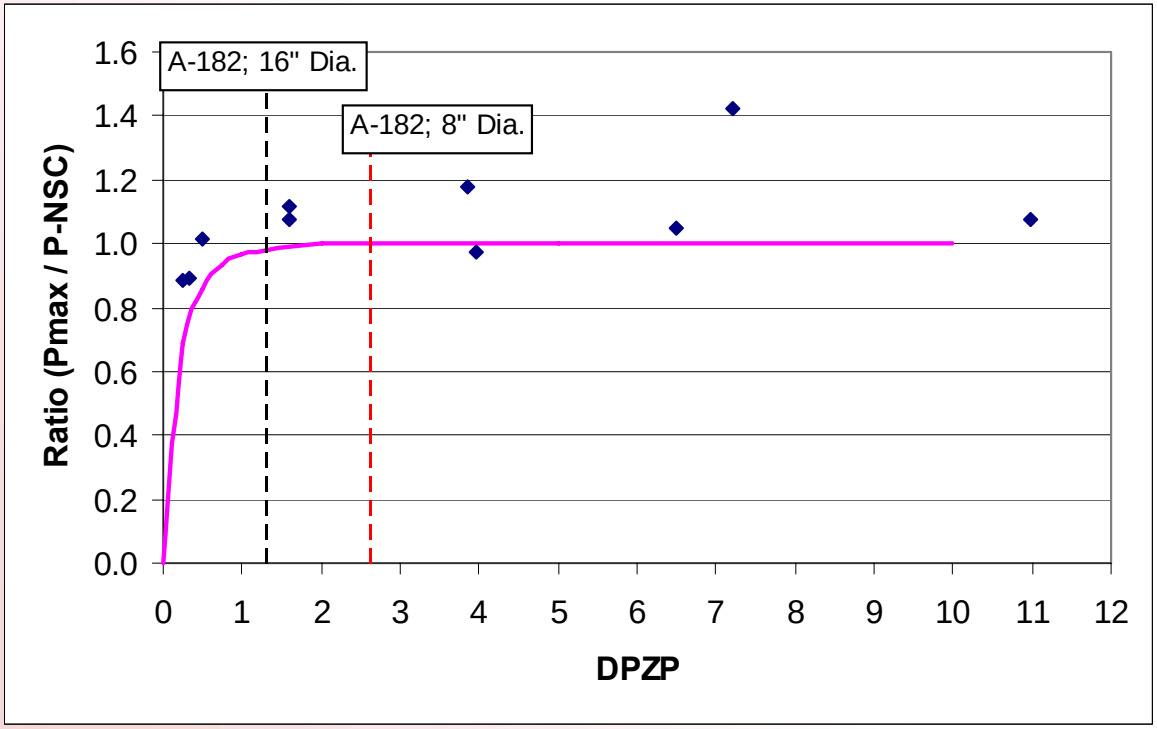

Inclusion of Secondary Stresses

- Dynamic tests cited in [1] as reason for including secondary stresses not compelling
- Static tests with large complex cracks indicate large displacements required prior to crack instability
  - many times larger than expected displacements due to thermal loadings in plants, including stratification

Schematic of Compliant Load Complex Crack Pipe Test [4]

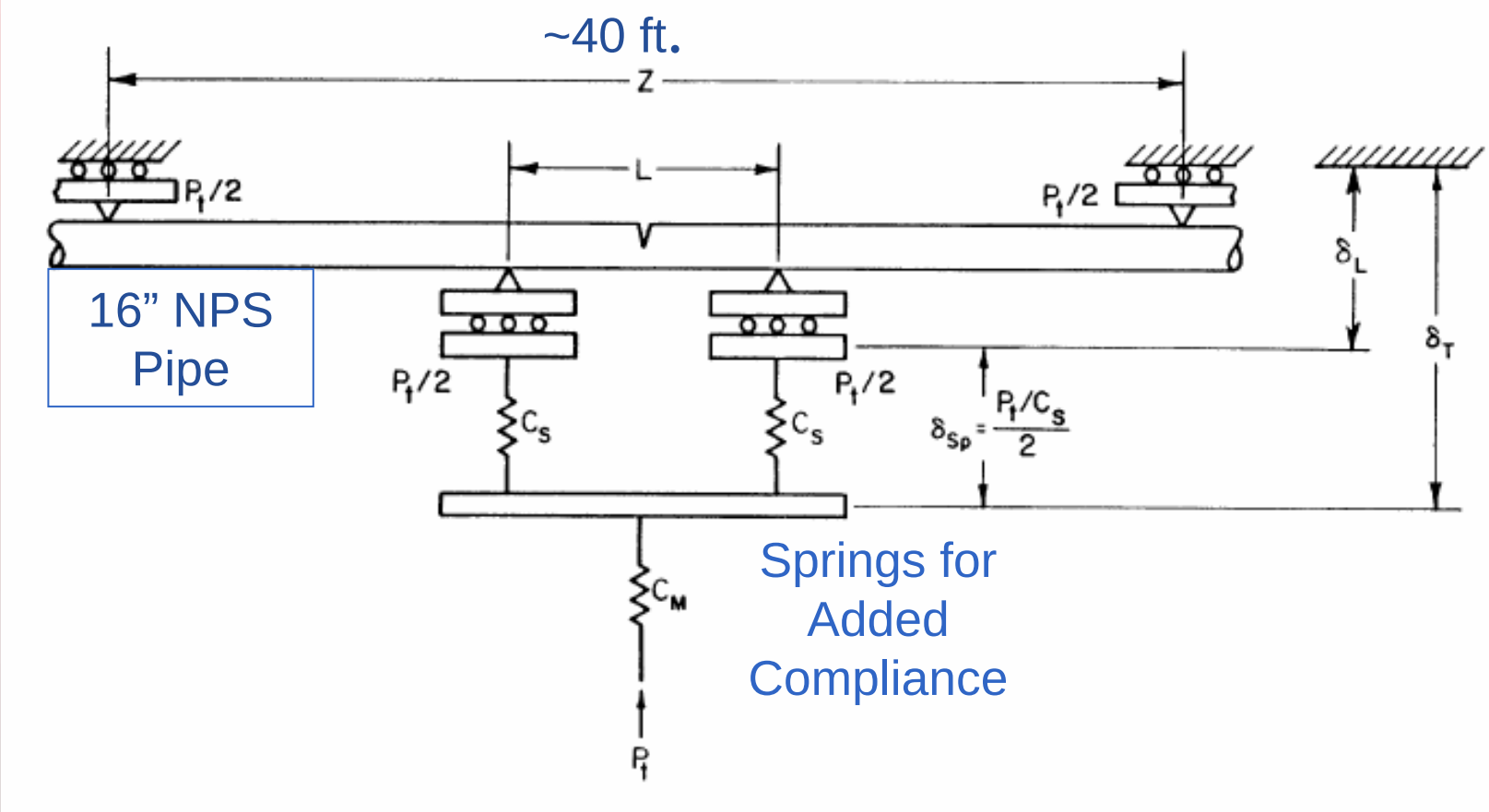

Load-Line Displacement to Fracture [4] (large in comparison to applied thermal displacements in plants)

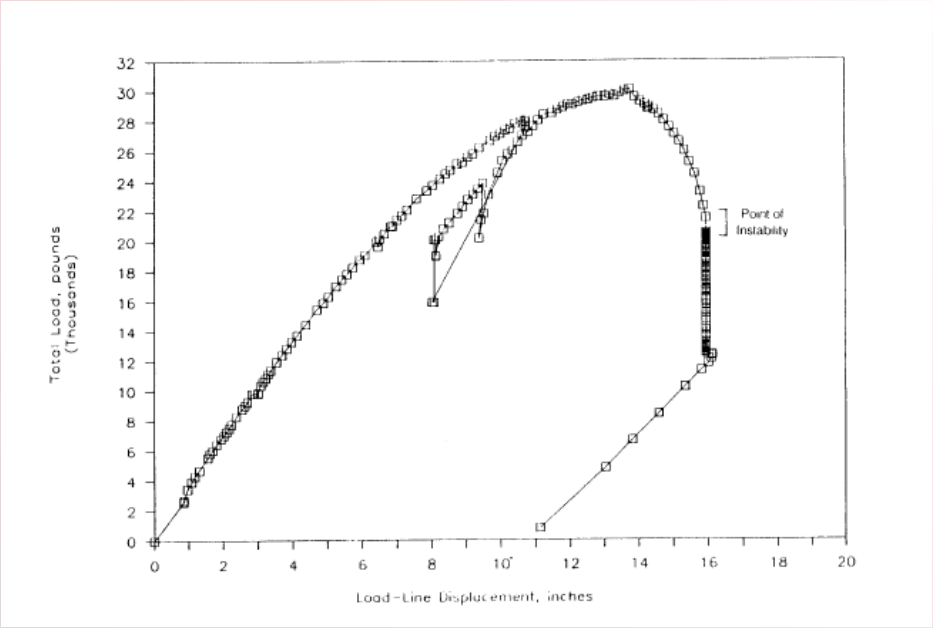

At Actuator

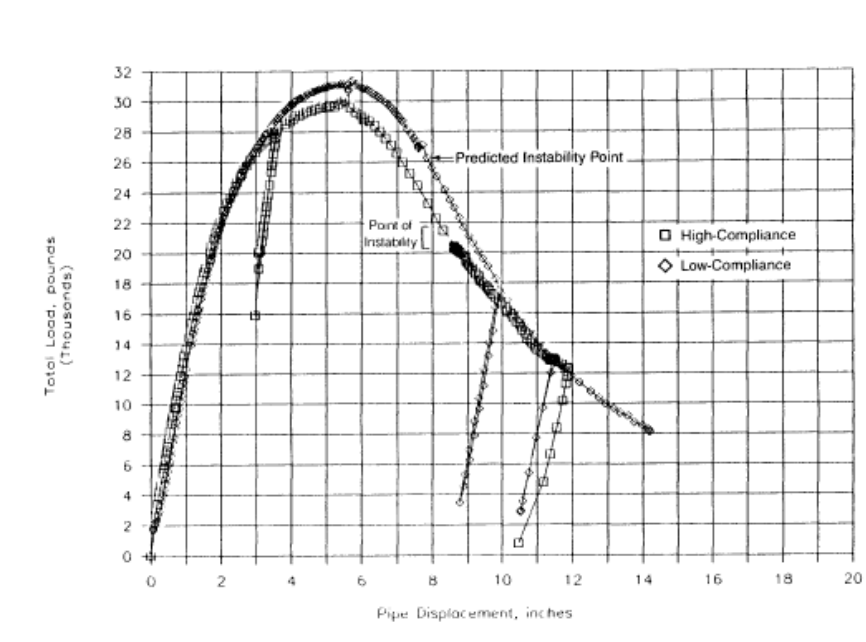

At Pipe

Typical Surge Line Geometry (Westinghouse Plant)

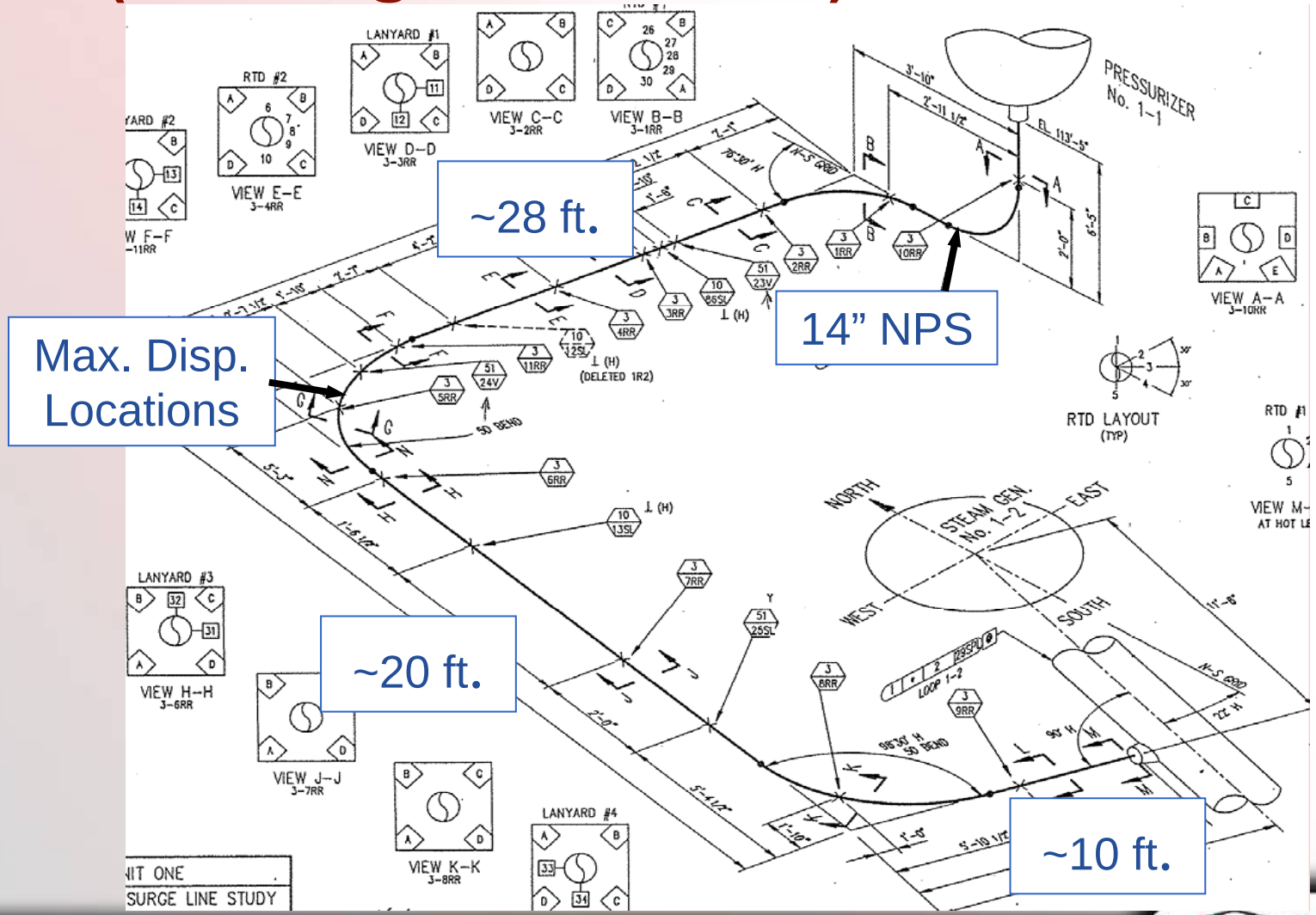

Structural Integrity Associates, Inc.

Thermal Stratification Displacements in Surge Line

Support or Restraint	Node Point	X	Y (VERTICAL)	Z
3-9RR	5040	-0.14	-0.01	-0.01
3-8RR	5070	-0.12	-0.90	0.20
51-25 SL*	5100	-0.18	-1.34	0.33
3-7RR	5110	-0.24	-1.56	0.40
10-13SL**	5130	-0.39	-2.48	0.59
3-6RR	5140	-0.43	-2.87	0.64
3-5RR	5170	-0.58	-3.61	0.70
51-24V#	5180	-0.63	-3.13	0.66
3-11RR	5210	-0.63	-2.51	0.62
3-4RR	5230	-0.52	-0.68	0.48
3-3RR	5250	-0.39	-0.13	0.40
10-86 SL##	5260	-0.36	-0.08	0.39
51-23V+	5270	-0.31	-0.04	0.37
3-2RR	5290	-0.13	-0.32	0.28
3-1RR	5310	-0.03	-0.47	0.28
3-10RR	5340	0.02	-0.31	0.14

Max. Disp. Locations

Recommendations

- Limit Load vs. EPFM - Apply DPZP Screening Criteria
  - For DPZP > 1.0, use limit load (ANSC for actual flaw shape)
  - For DPZP < 1.0, use limit load with Wilkowski Z-Factor Correction
- Material Properties
  - Use SS Base Metal Tensile Propertied (Flow Stress, Stress-Strain Curve)
- Secondary Stresses
  - Overly Conservative to Include Full Value of Large Stratification Moments in Surge Nozzle Limit Load Evaluations
  - Include Piping Geometry of Typical Plant(s) to Determine Effect of Secondary Stress on J-T Analyses

References

1. G. Wilkowski et al, “Draft Technical Note on Critical Flaw Size Evaluations for Circumferential Cracks in Dissimilar Metal Welds”, EMC2, April 9, 2007.
2. Gery M. Wilkowski and Paul M. Scott, “A Statistical Based Circumferentially Cracked Pipe Fracture Mechanics Analysis For Design or Code Implementation”, Nuclear Engineering and Design 111 (1989) 173-187
3. G. Wilkowski et al, “Determination of the Elastic-Plastic Fracture Mechanics Z-Factor for Alloy 82/182 Weld Metal Flaws for Use in the ASME Section XI Appendix C Flaw Evaluation Procedures”, (Draft) ASME PVP2007-26733
4. NUREG/CR-4082, Volumes 7 & 8, “Degraded Piping Program – Phase 2”, March 1984- January 1989
5. Pipe Fracture Encyclopedia, U.S. NRC, 1997 (A collection of NUREG Reports and Data Files from the DP2 and other programs distributed on CDs)
6. W.J. Mills, C.M. Brown, “Fracture Toughness of Alloy 600 and EN82H Weld in Air and Water”, B-T-3264, Bettis APL,
7. J.D. Landes, J. McCabe, Toughness of Austenitic Stainless Steel Pipe Welds, EPRI NP-4768, October, 1988