Implication of Wolf Creek Indications

Verification of Phase 1 results

David Rudland, Heqin Xu, and Do-Jun Shim
Engineering Mechanics Corporation of Columbus

May 8, 2007

Outline

- ***Semi-elliptical comparisons with pressure and bending only***
- ***Wolf Creek relief line semi-elliptical crack comparison***
- ***Arbitrary crack growth calculations***
- ***Plans***

Semi-elliptical Crack Under Pressure and Bending

- ***Conducted K-solution comparison with results from Table 3 of Phase 1 results***

- ***Wolf Creek relief nozzle geometry, different crack sizes, but all semi-elliptical***
  - ***internal pressure : 2.235 ksi***
  - ***axial tension : 2.0 ksi***
  - ***effective global bending moment : 277.5 in-kips***

Case	R_i/t	a/t	a	$2c_i/a$	2θ (deg)
3	2.004	0.1	0.129	15	42.9
15	2.004	0.3	0.387	5	42.9
18	2.004	0.3	0.387	21	180.1
20	2.004	0.3	0.387	30	257.3

Semi-elliptical Crack Under Pressure and Bending

- ***PipeFracCAE was used to generate mesh***
- ***A quarter model with twenty-noded brick elements***
- ***Collapsed crack tip nodes and quarter-point nodes for $r^{(-1/2)}$ singularity employed***

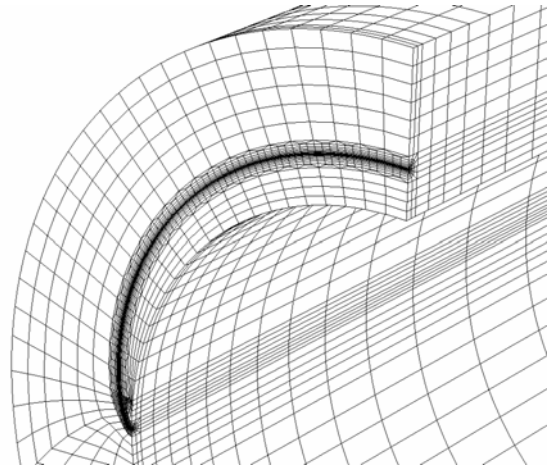

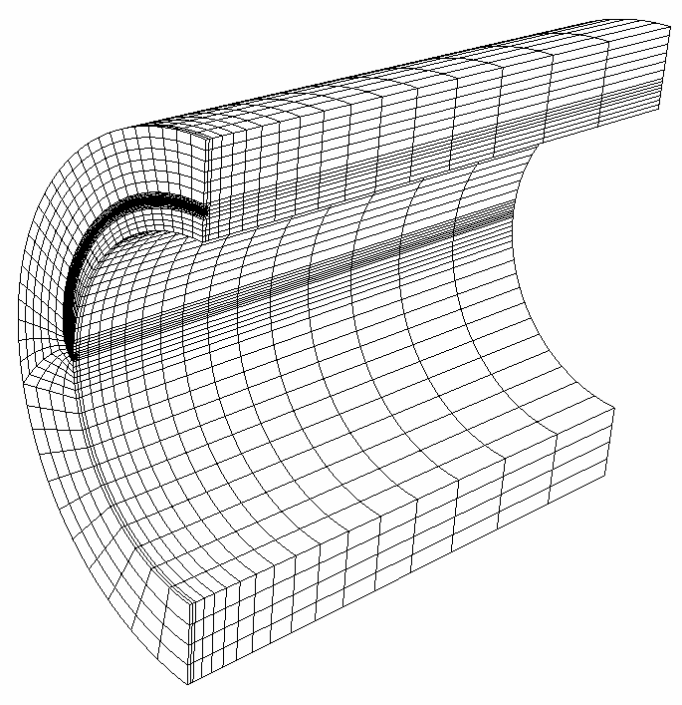

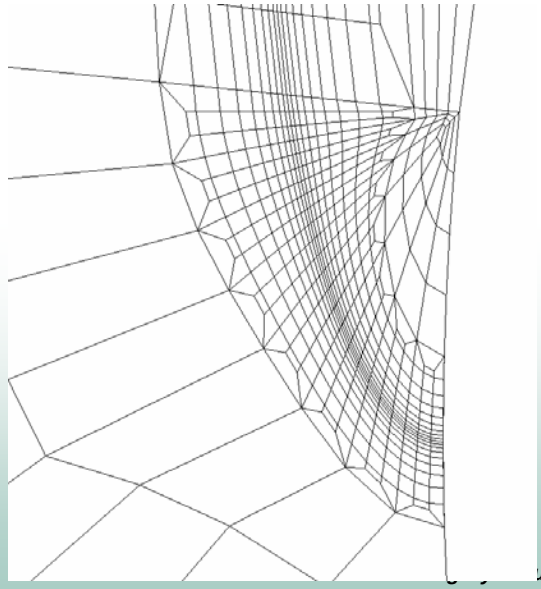

K-value Comparisons

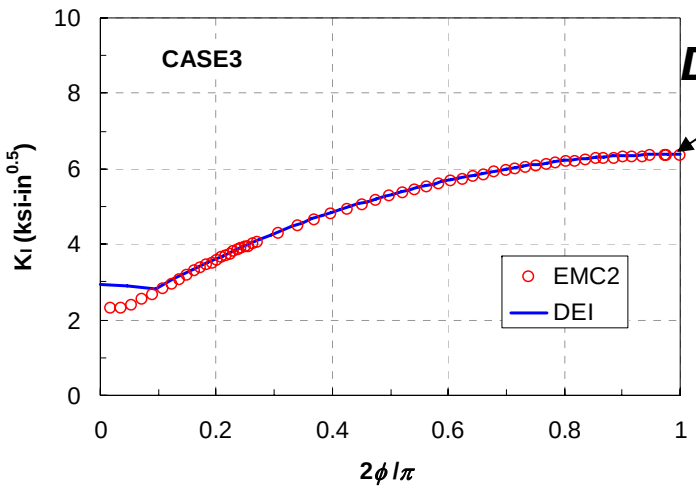

Deepest point

Free Surface

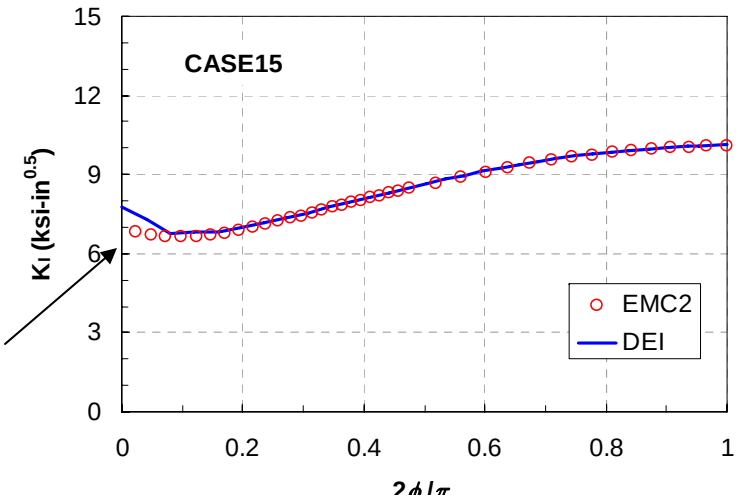

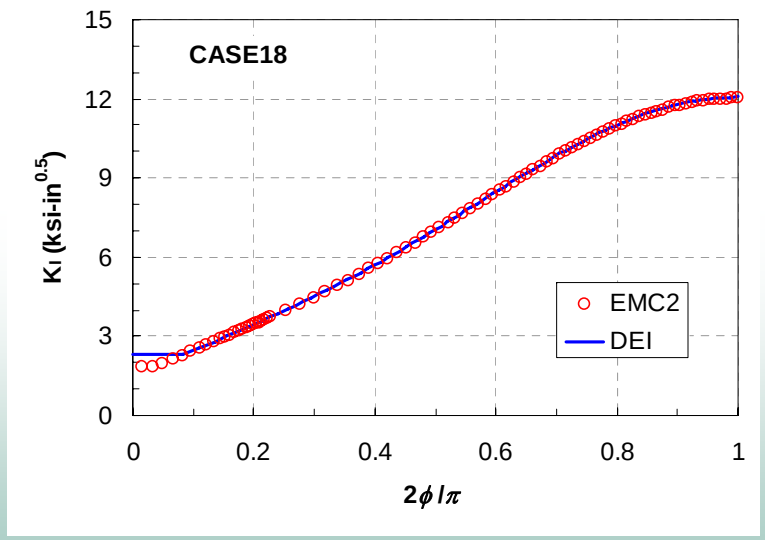

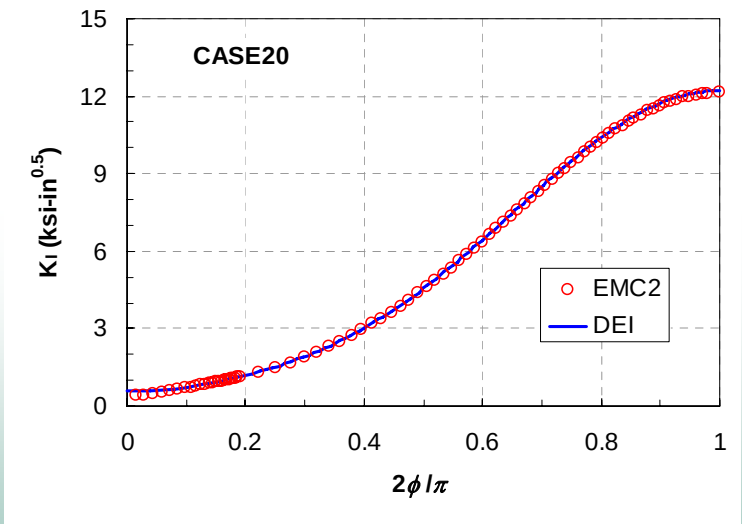

K-value Comparisons at Free Surface

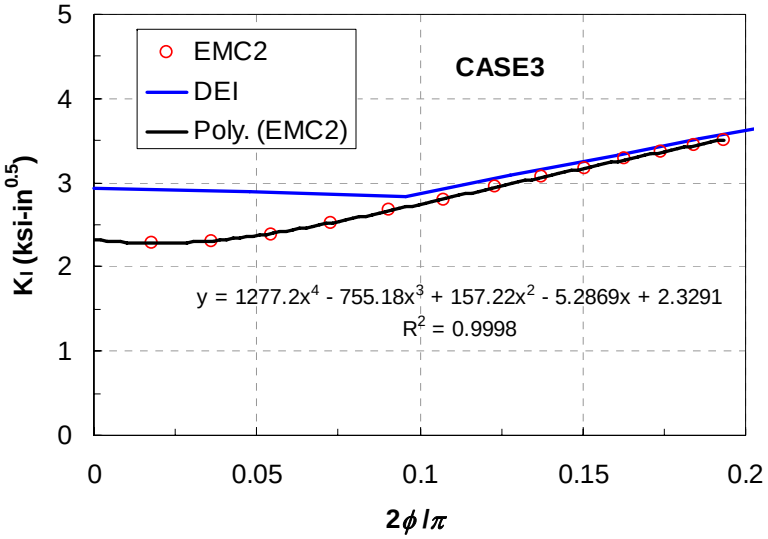

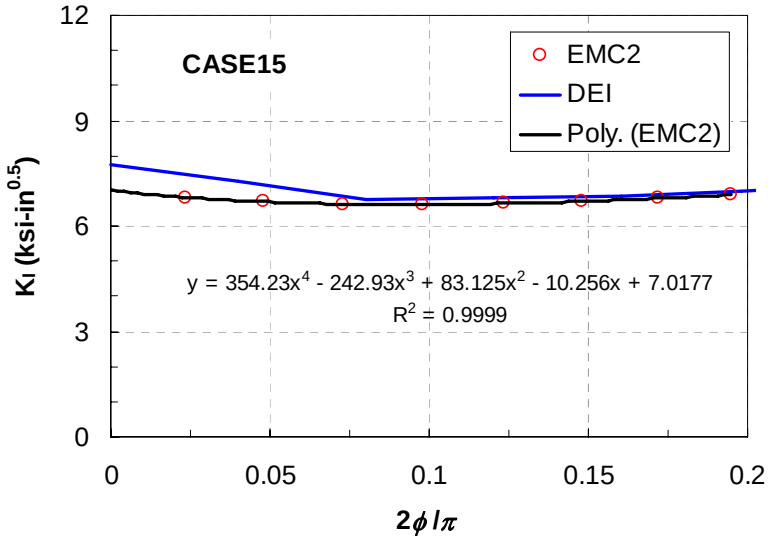

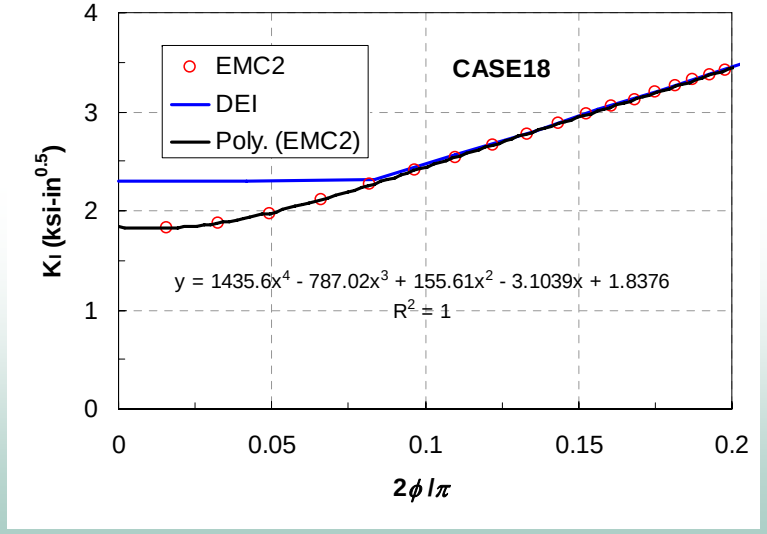

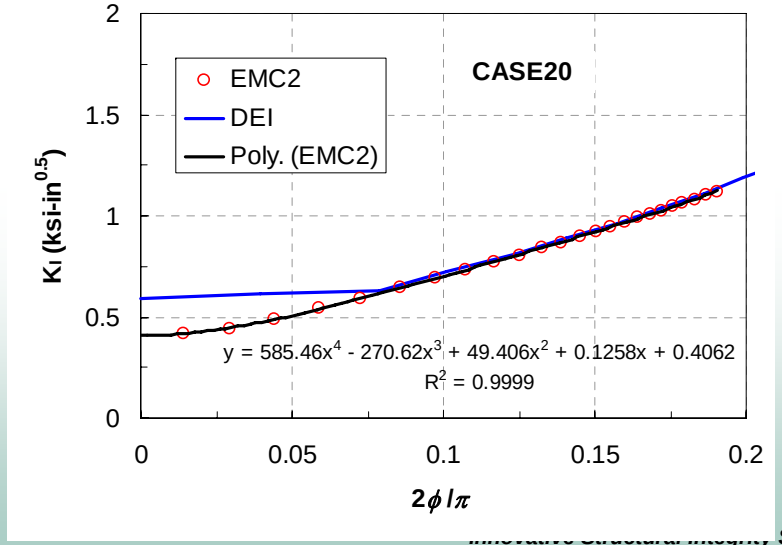

K-value Comparison with Anderson

	Anderson	(ksi-in$^{0.5}$)	DEI	(ksi-in$^{0.5}$)	Emc^2	(ksi-in$^{0.5}$)
	Ksurf	**Kdeep**	**Ksurf**	**Kdeep**	**Ksurf**	**Kdeep**
Case3	2.6	6.2	2.9	6.4	2.33	6.35
Case15	7.2	9.9	7.8	10.1	7.02	10.05
Case18	2.4	12.2	2.3	12.1	1.84	12.01
Case20	1.5	13	0.6	12.2	0.41	12.14

Comments on Comparisons

- ***Overall, the comparisons are excellent.***
- ***Emc^2 mesh is a bit finer near free surface, which provides better free surface approximations.***
- ***Largest differences occur at free surface.***
- ***Not sure of DEI extrapolation procedure, looks linear.***
- ***Emc^2 results path independent within one element from free surface.***

Comparisons with WRS

- ***Using Wolf Creek geometry, loads, and WRS, calculate K solution for assumed semi-elliptical crack.***
- ***Can we verify same WRS and K-solutions??***

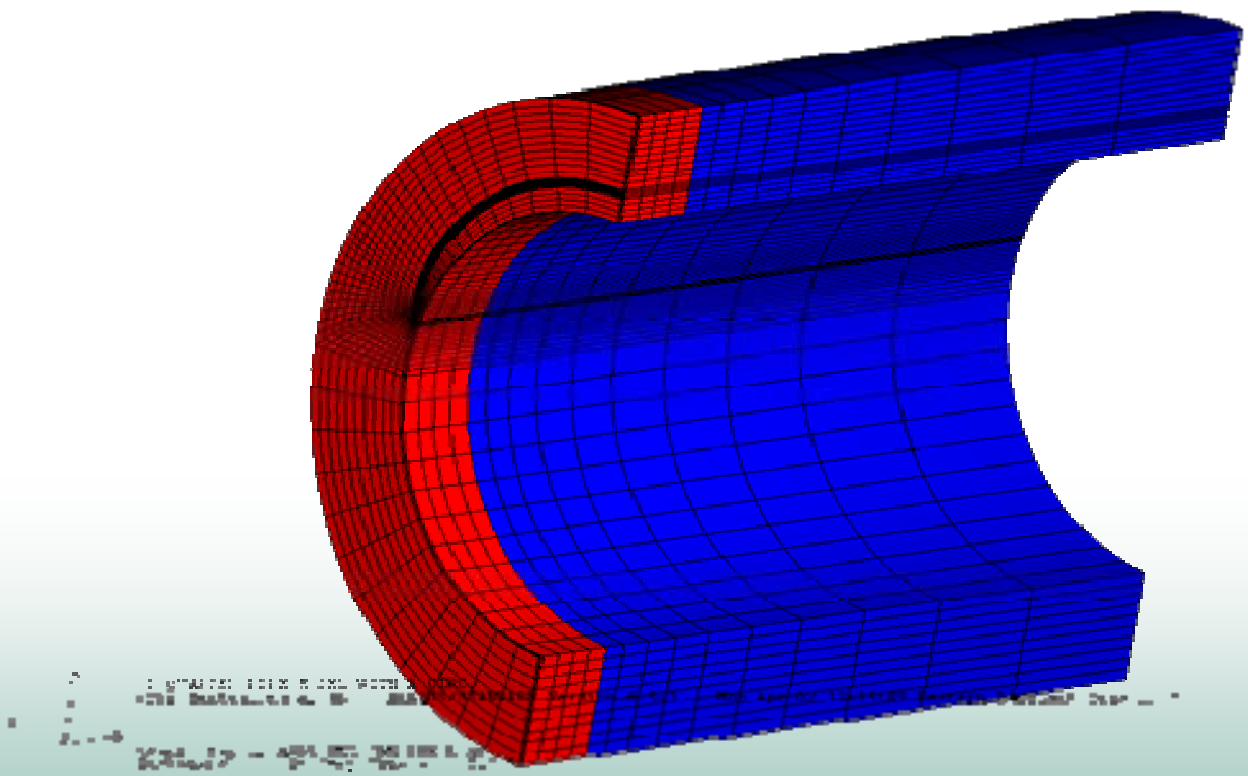

Estimating WRS for Relief Nozzle

- ***Assumed original scoping analyses through-thickness WRS field for Relief nozzle***

- ***Used temperature gradient, with constant thermal expansion to develop stresses – DEI uses constant temperature with variable thermal expansion***

Estimated WRS

Temperature

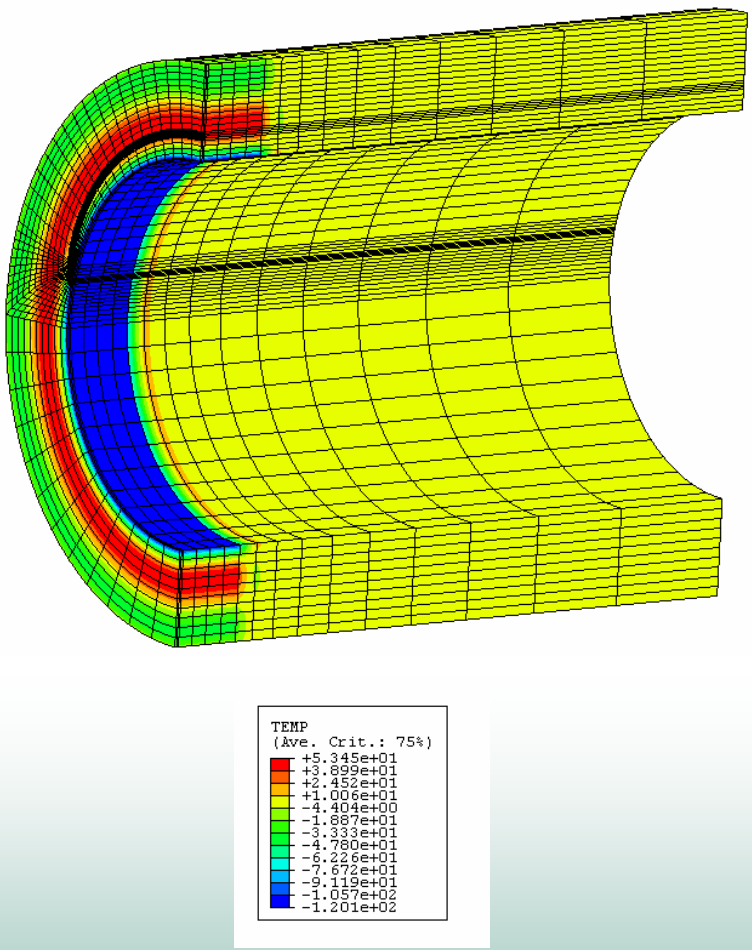

Stress

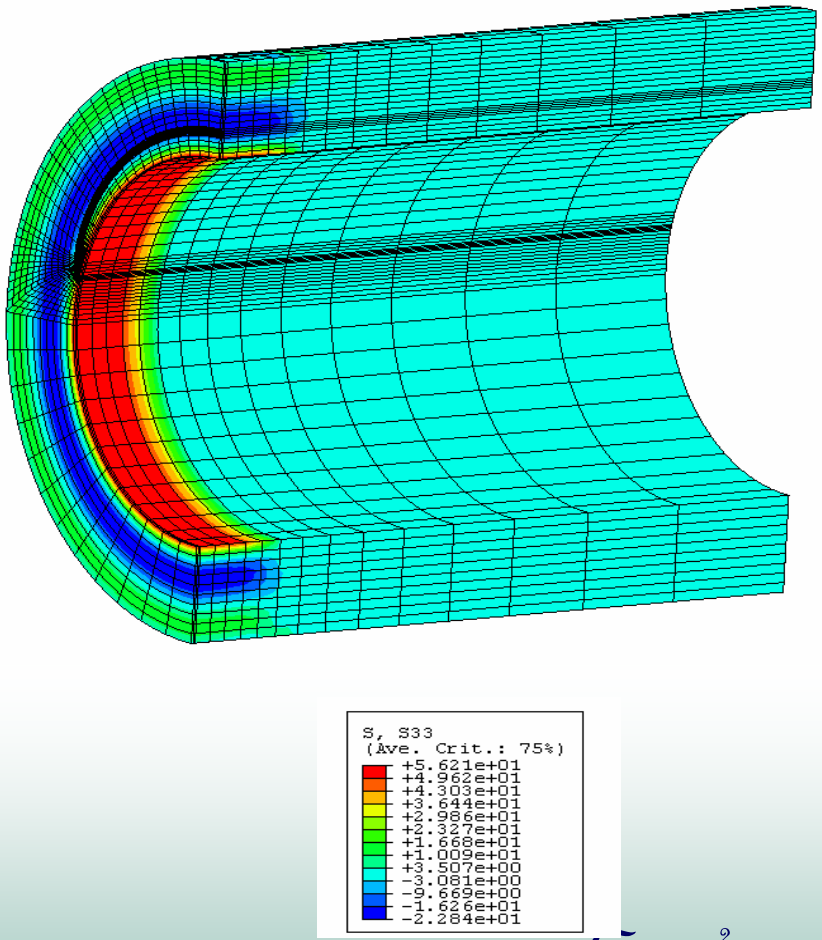

Comparison of Mesh

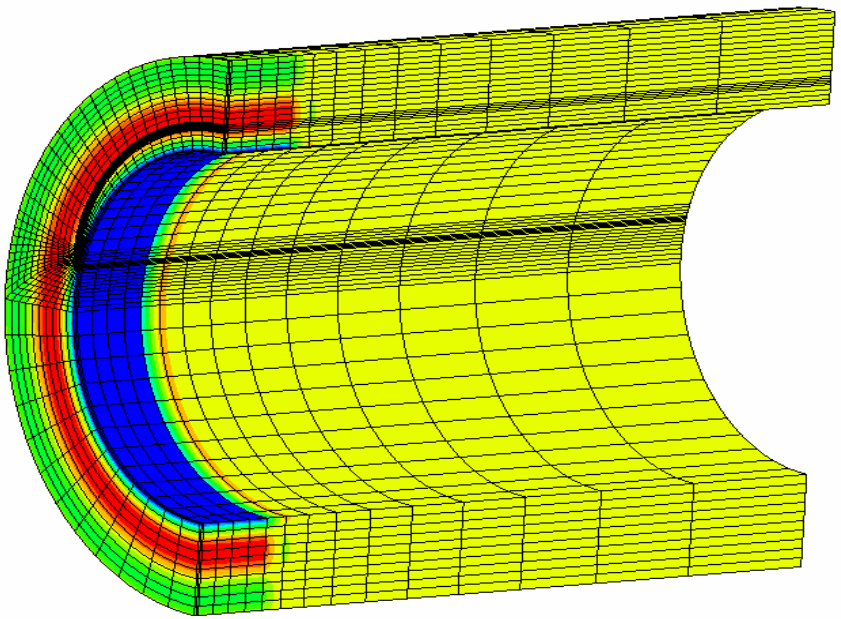

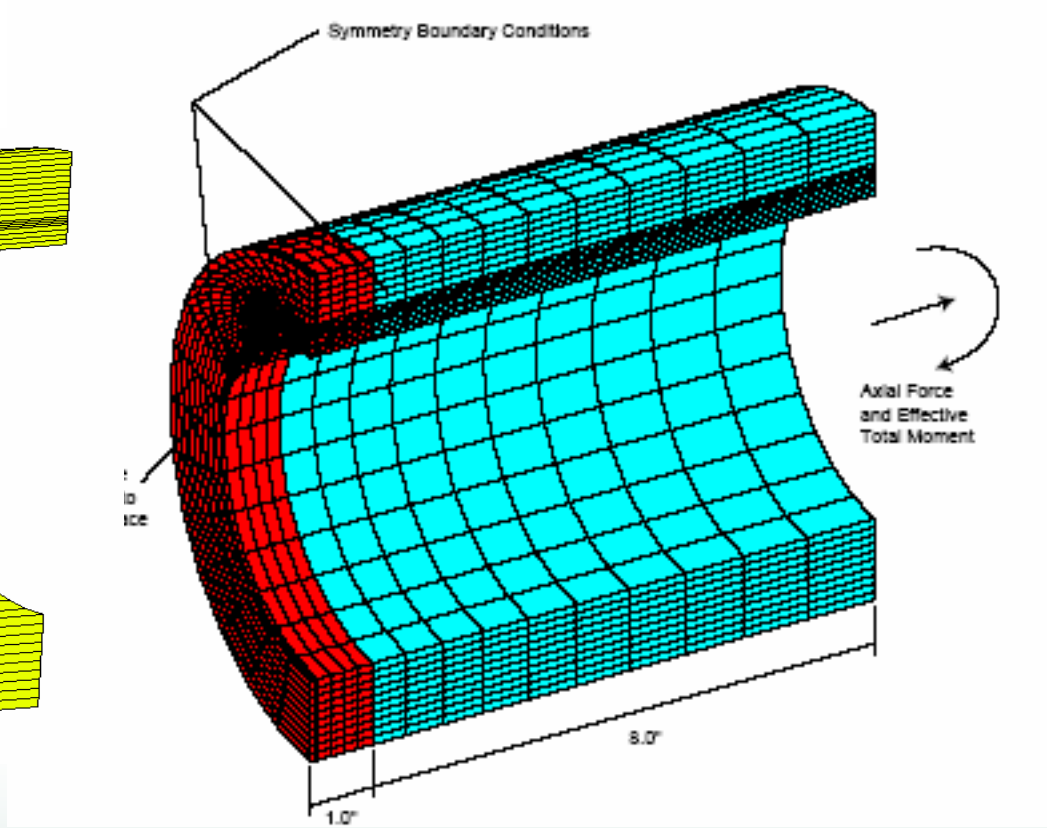

Emc² **DEI**

Through-Thickness Simulated WRS

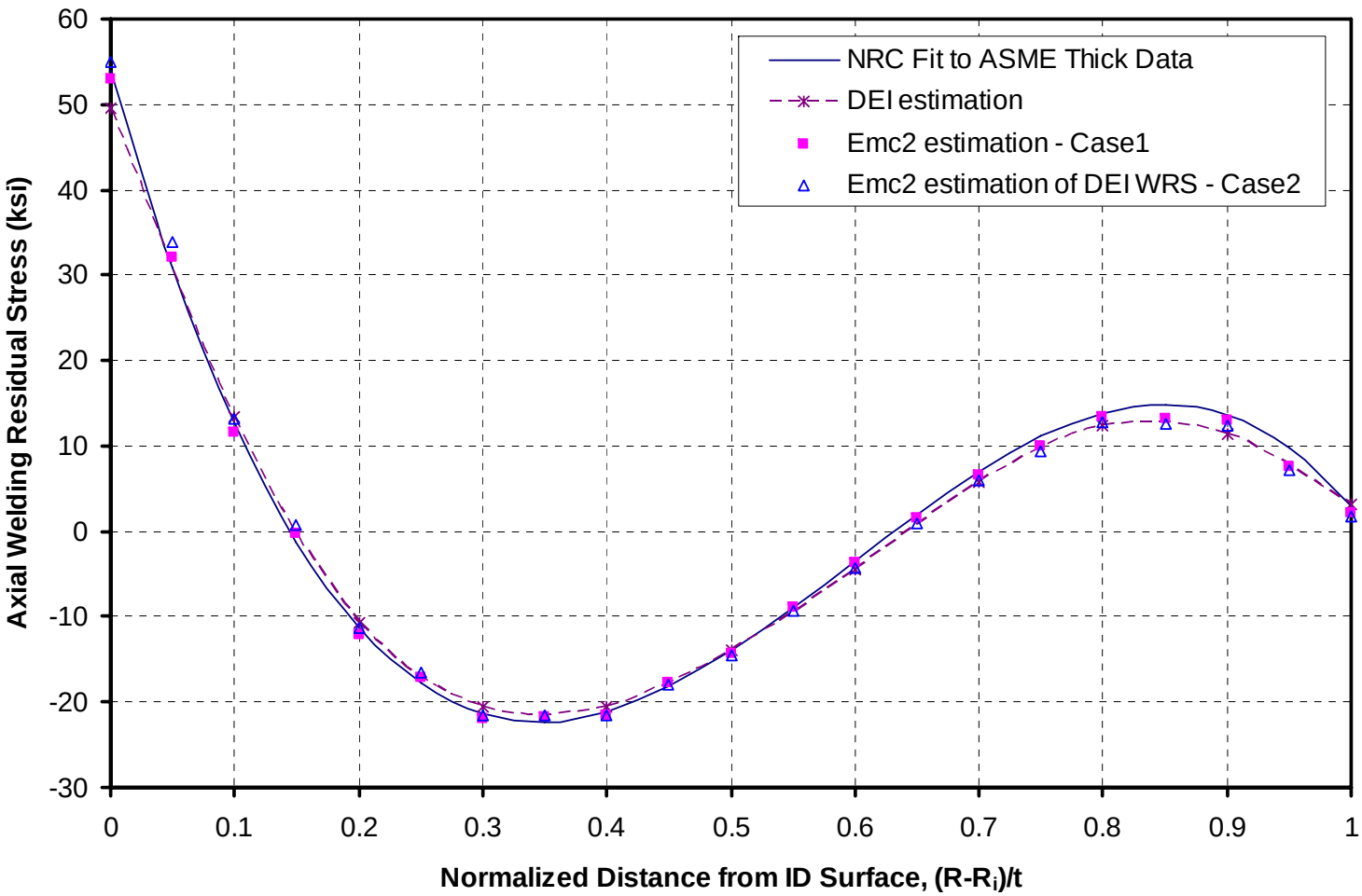

Axial Extent of Simulated WRS

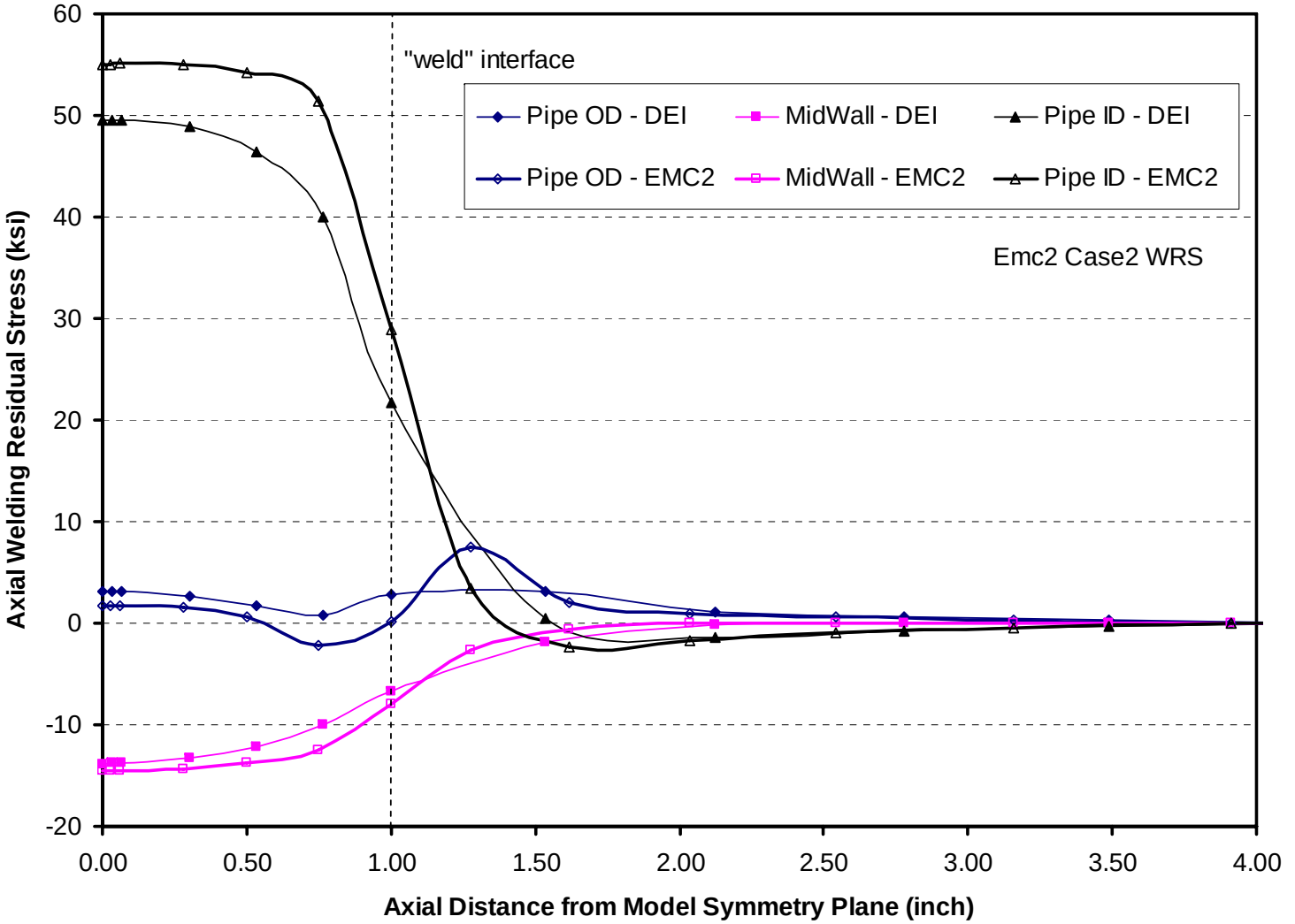

K-values for Semi-elliptical Crack

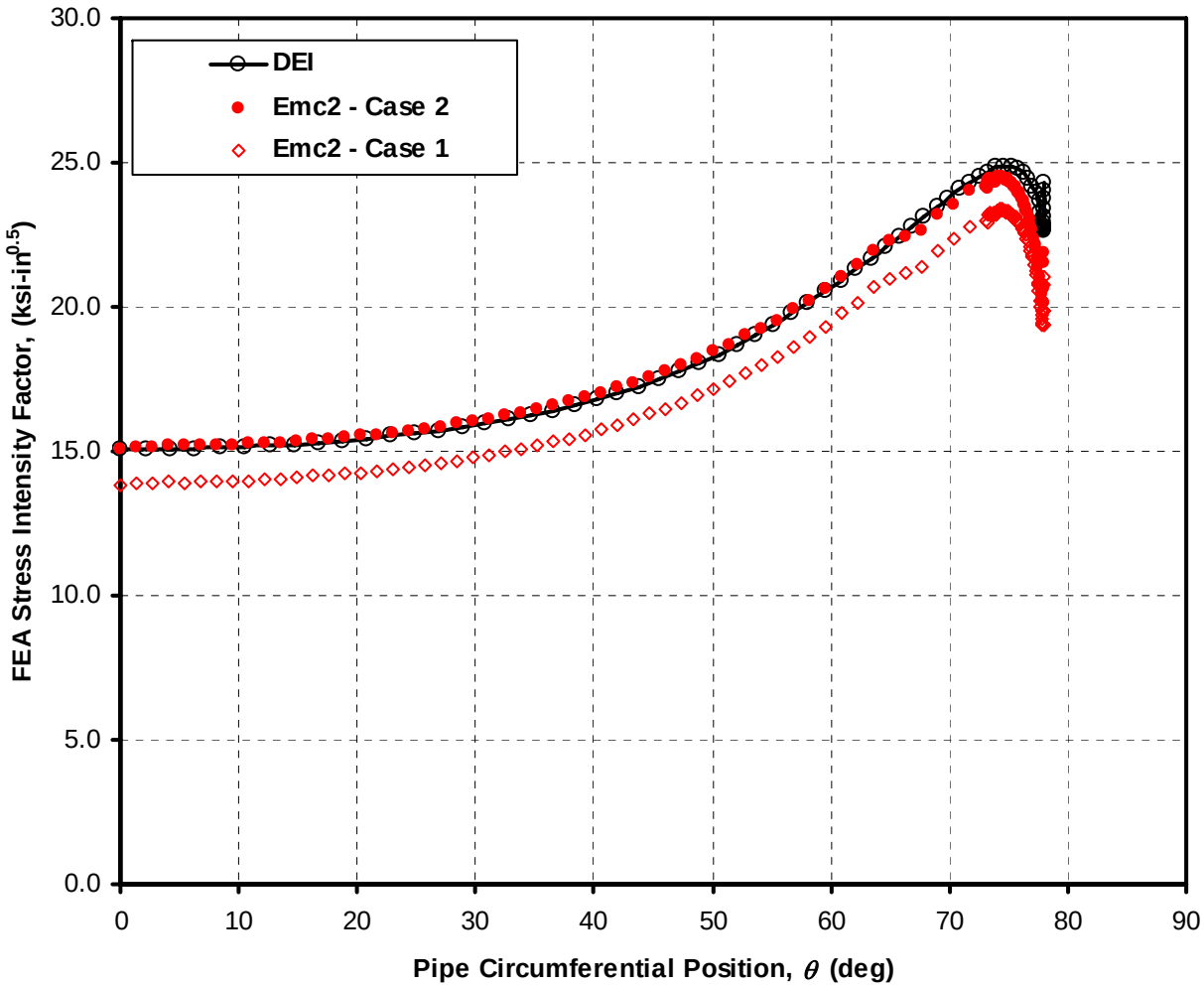

K-values for Semi-elliptical Crack

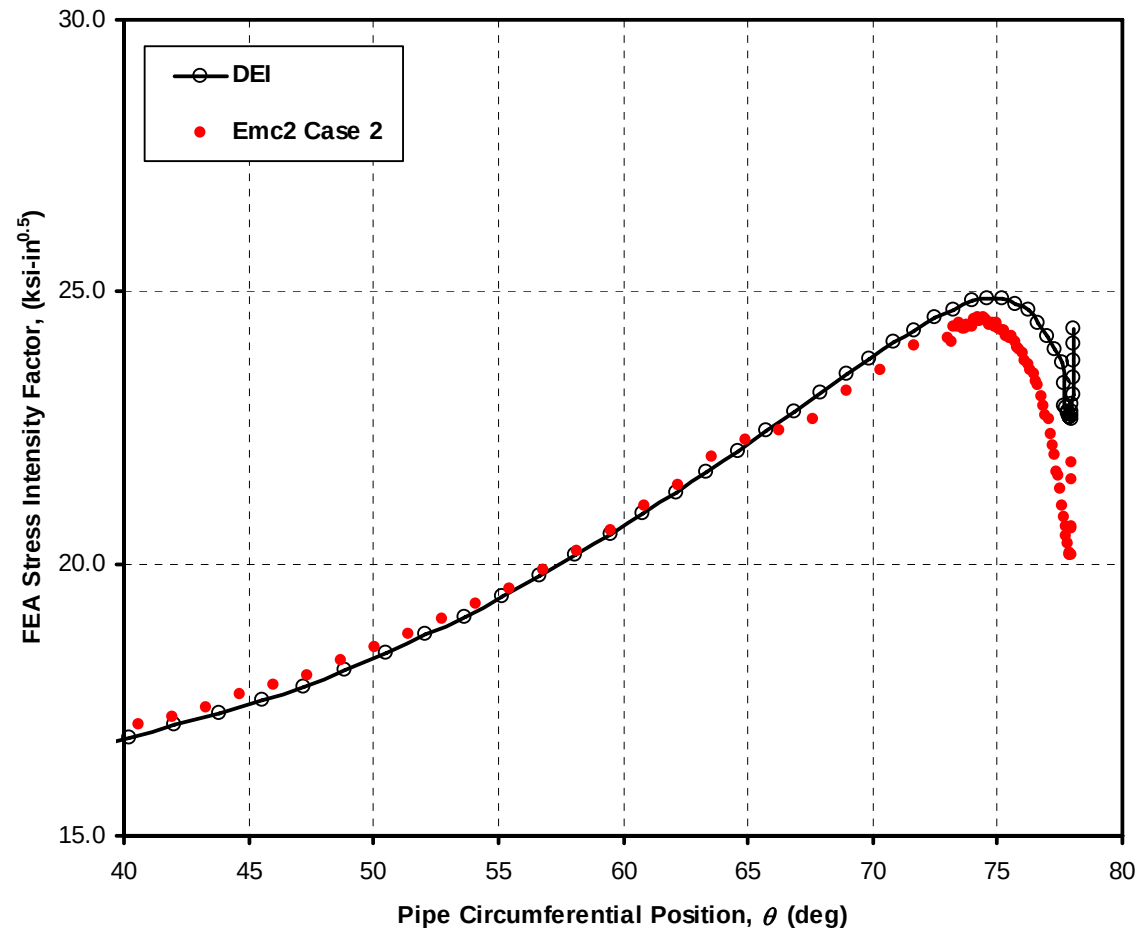

Unusual Response

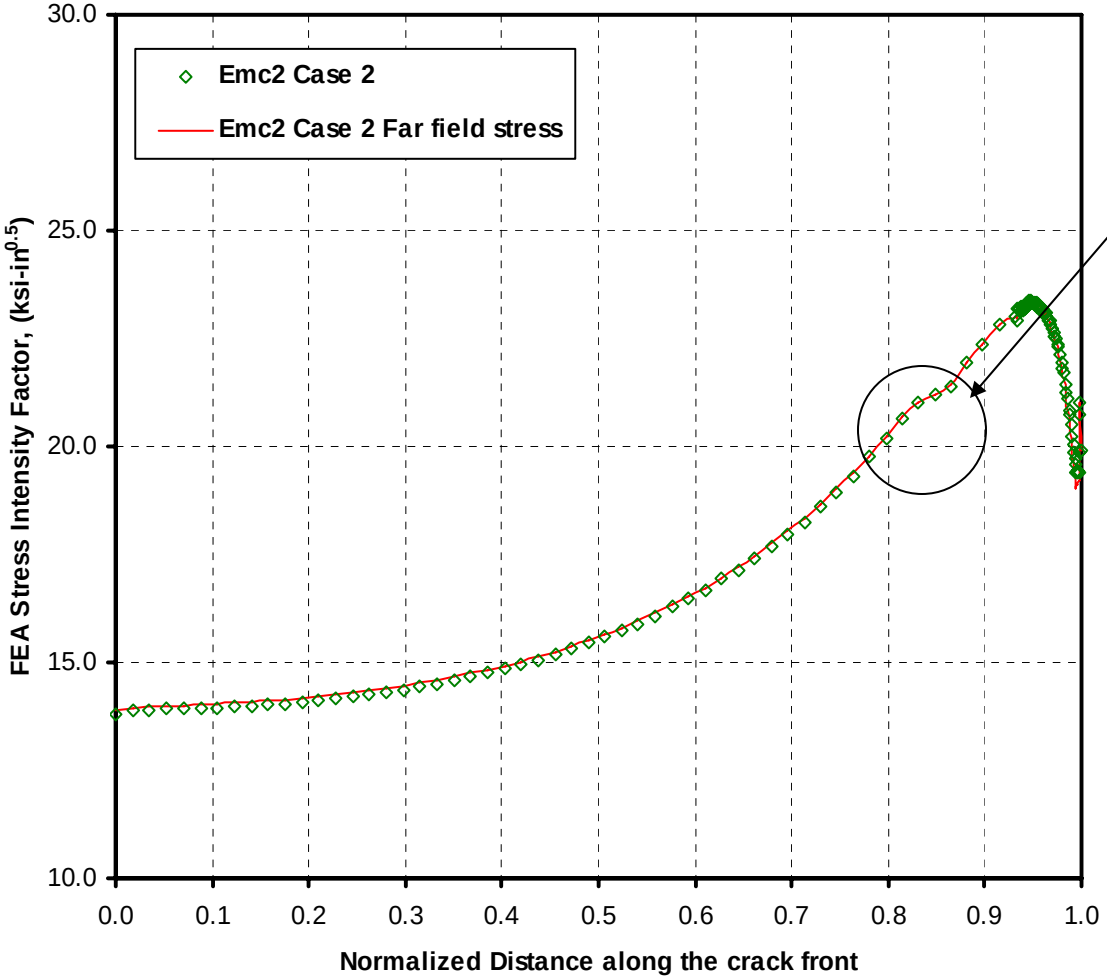

Unusual "bump" in solution – Due to limited points to define arbitrary crack front

Defining Crack Front

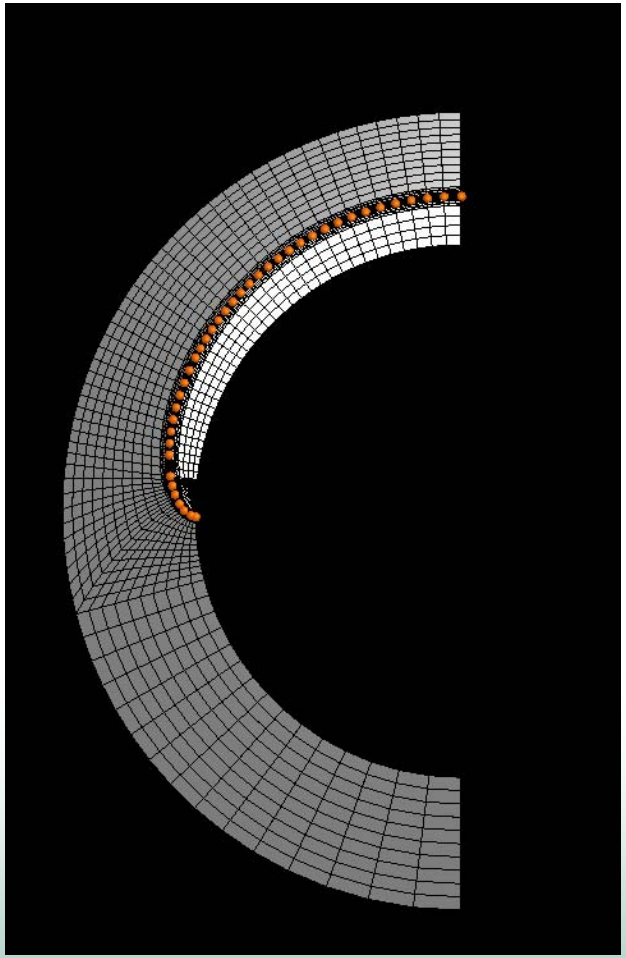

Crack growth controlled at every crack front node, but redefinition of crack front occurs at illustrated points – small discontinuities are smoothed

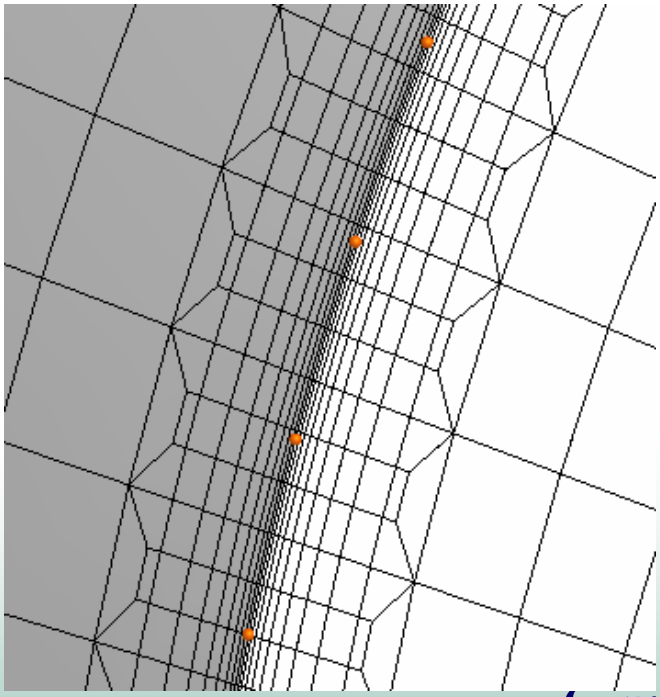

K-values for Initial Semi-elliptical Surface Crack

- ***FEACrack and PipeFracCAE give the same K-values when membrane and global bending loads are assumed. Care must be taken in extrapolating the K-values to the free surface.***

- ***It was very difficult to exactly match the stress distribution calculated by industry since mesh size seems to have an effect. Usability of this method for simulating actual residual stress fields??***

- ***After making best attempts at matching the DEI calculated residual stress field, the K-values matched well at the deepest point, but still varied about 15% near the free surface.***

- ***For these analyses PipeFracCAE used 20 points to define the arbitrary crack front. For long surface cracks, this may not be sufficient. In the current version, this number has been increased to 40.***

Further K Verification Needs

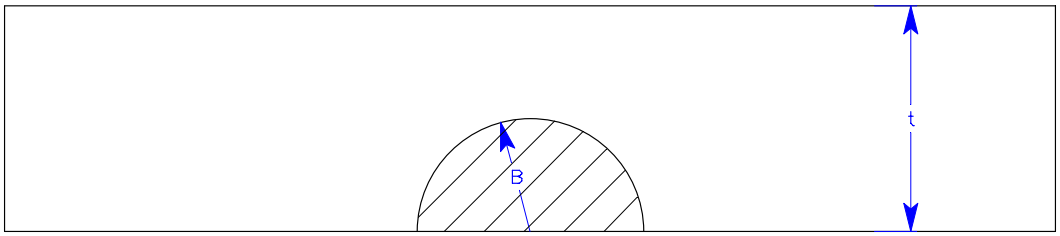

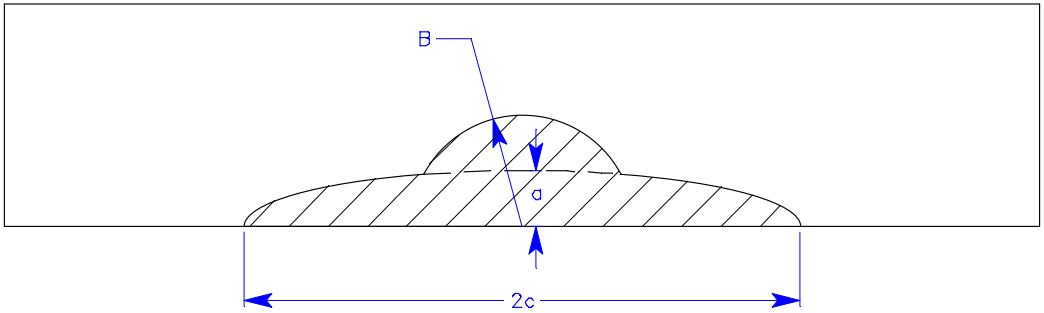

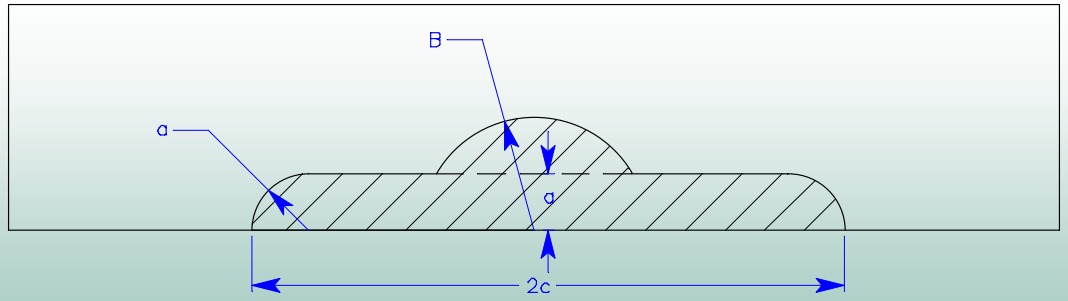

- ***Good verification for idealized surface crack shapes***
- ***Need to investigate non-idealized shapes***
- ***Chose combination of shapes that have analytical form***
- ***Use membrane and bending loads only – eliminate WRS uncertainty***

Phase 1 Verification

- ***Used PipeFracCAE to conduct crack growth analyses. Code is semi-automated and works with ABAQUS***
- ***Used same inputs as in Phase 1.***
- ***Used Case 2 (Matching DEI WRS as close as possible) welding stresses.***
- ***Use 1 month time increment until close to leak then reduce time increment***
- ***No critical crack calculations conducted at this time***

View of PipeFracCAE

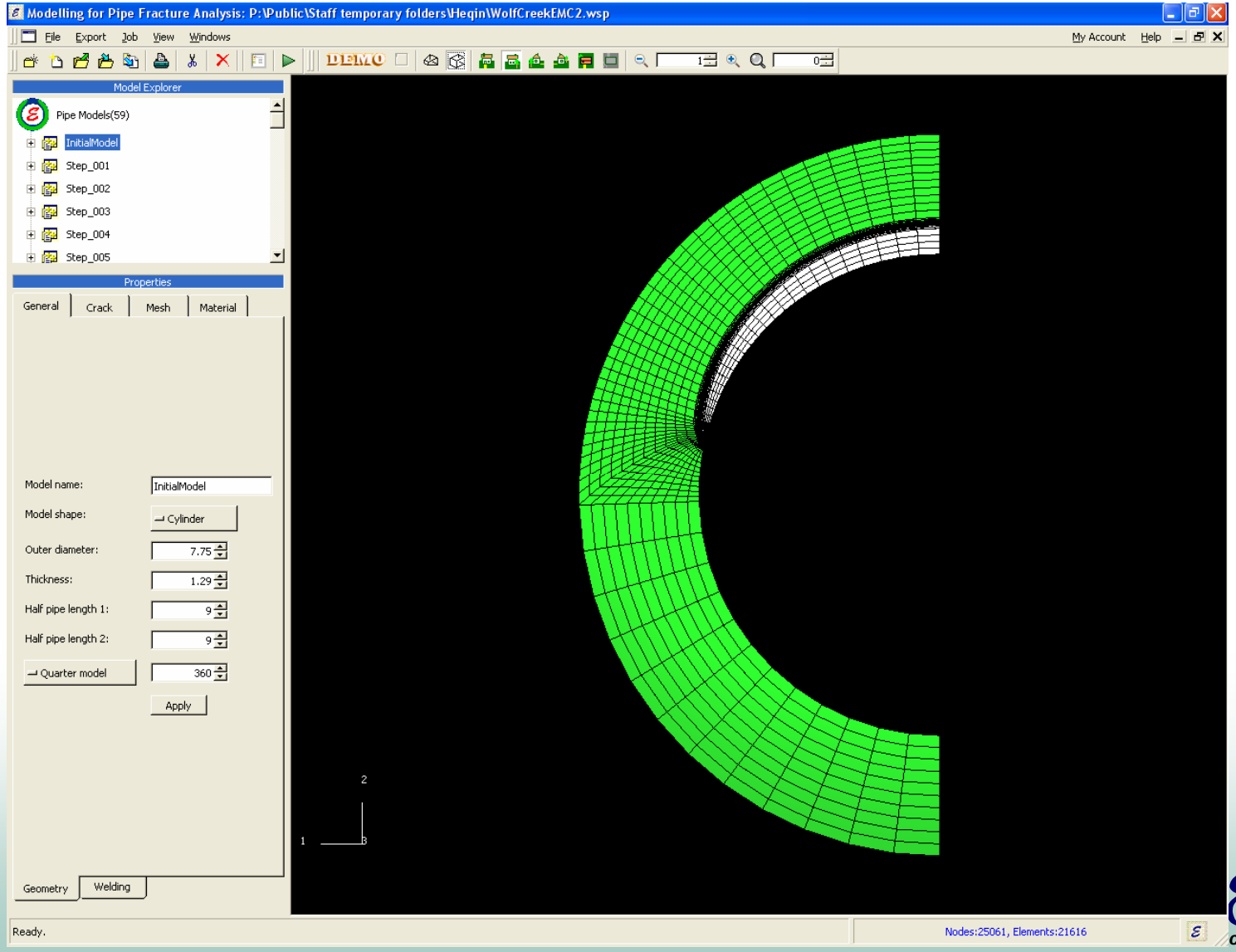

Initial Crack Growth for Relief Nozzle

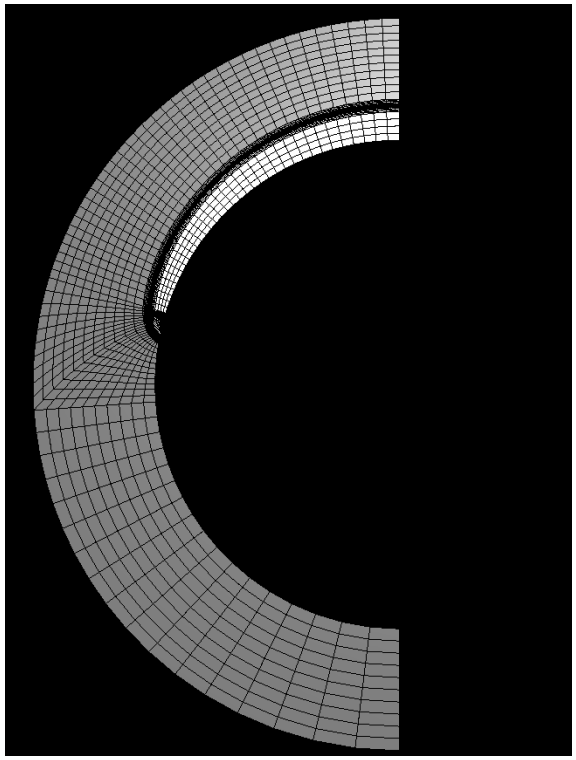

Original

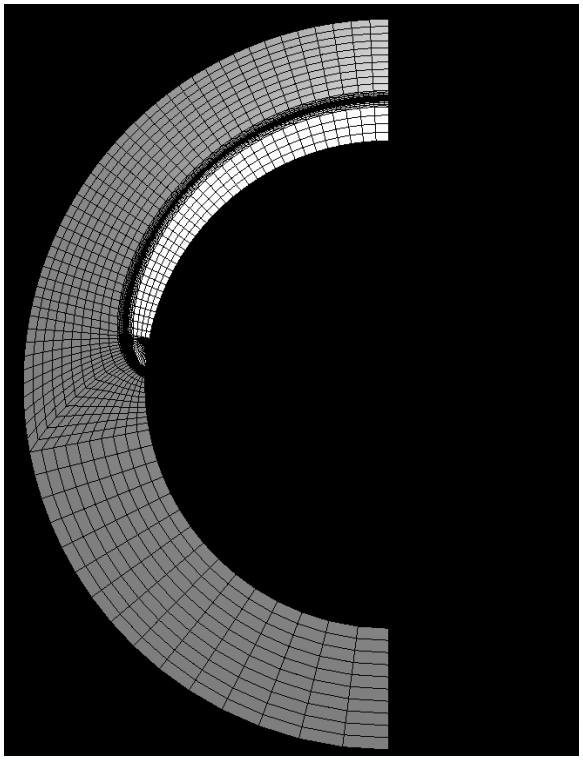

a/t=35%

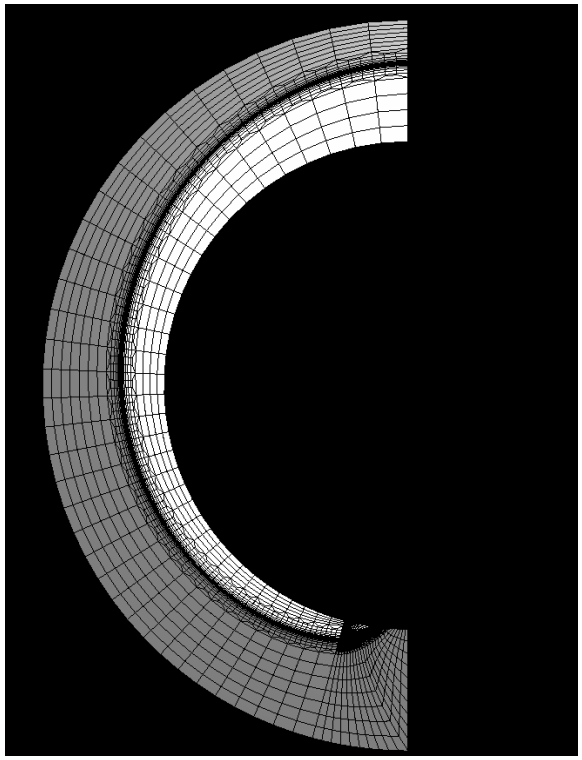

a/t=65%

Crack Growth, cont

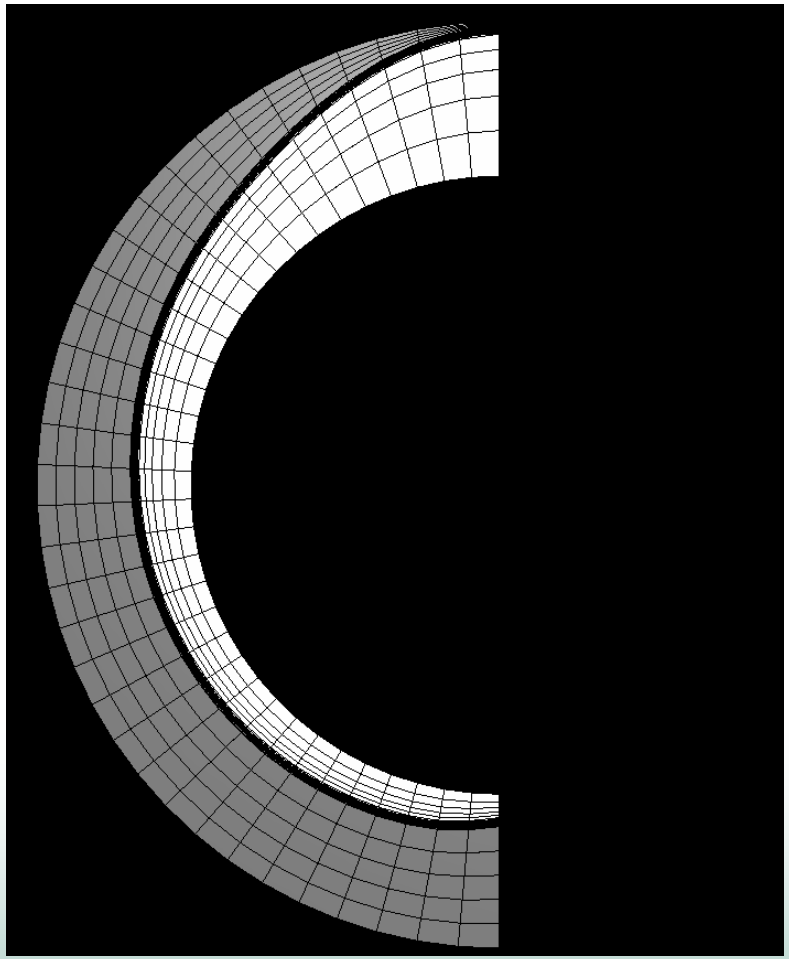

a/t=95%

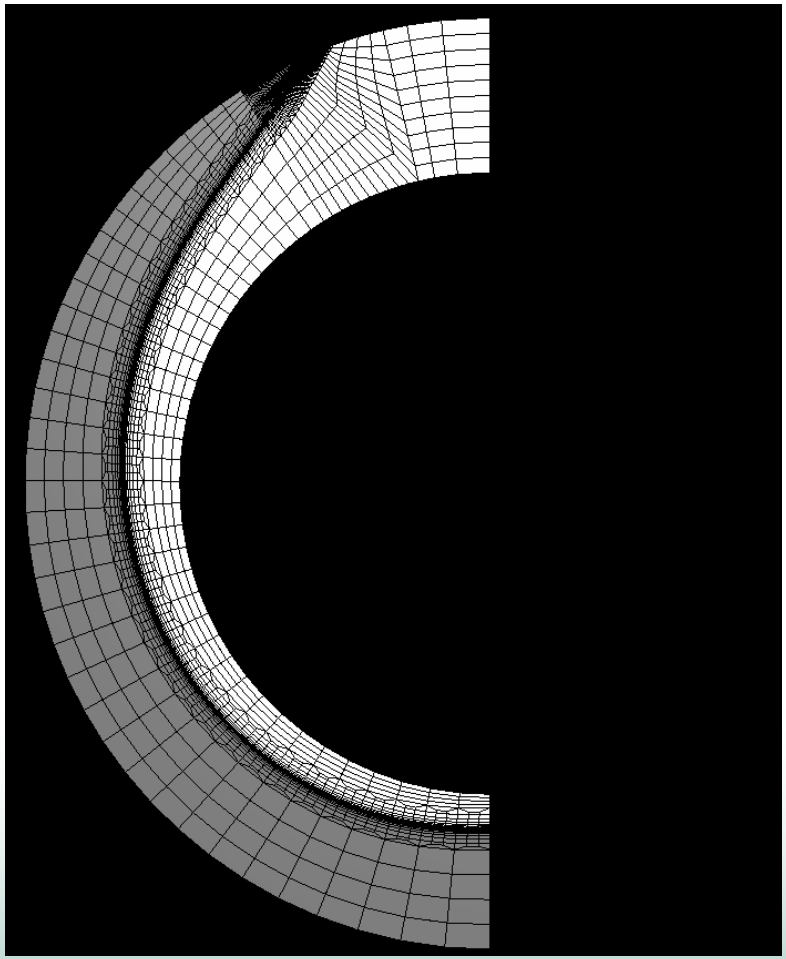

Complex crack

Crack Growth Video

Comparison with DEI

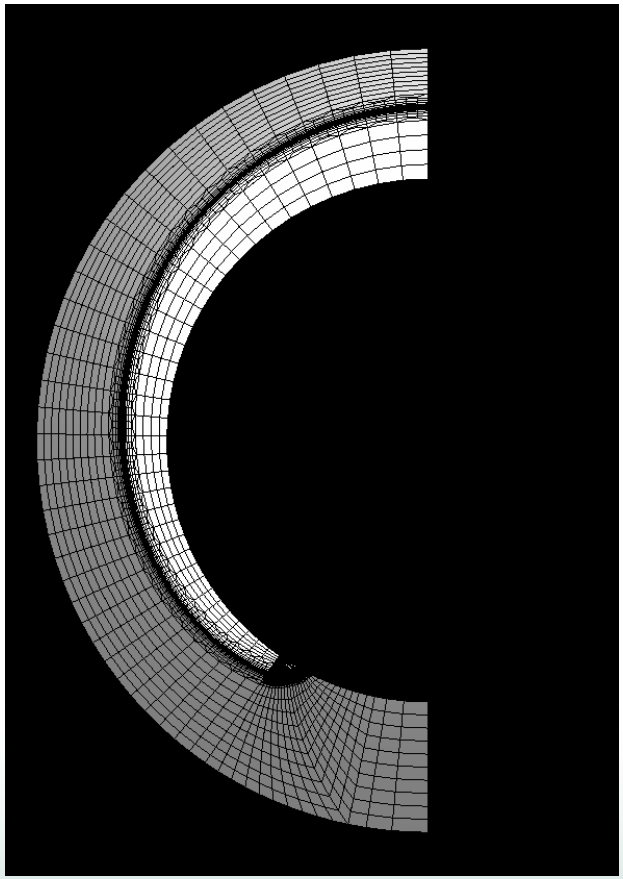

Emc²

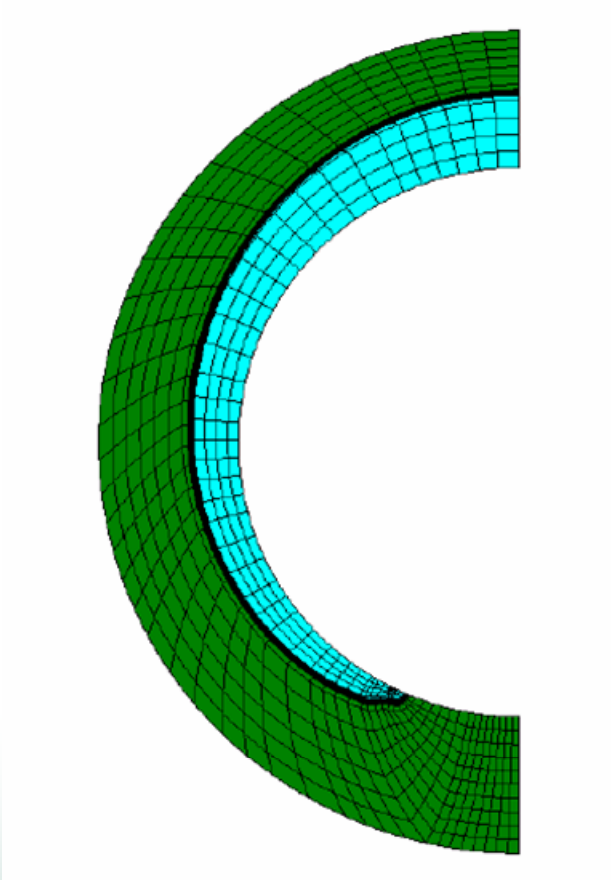

DEI

Comparison at 55% deep

Innovative Structural Integrity Solutions

Crack Growth Calculations

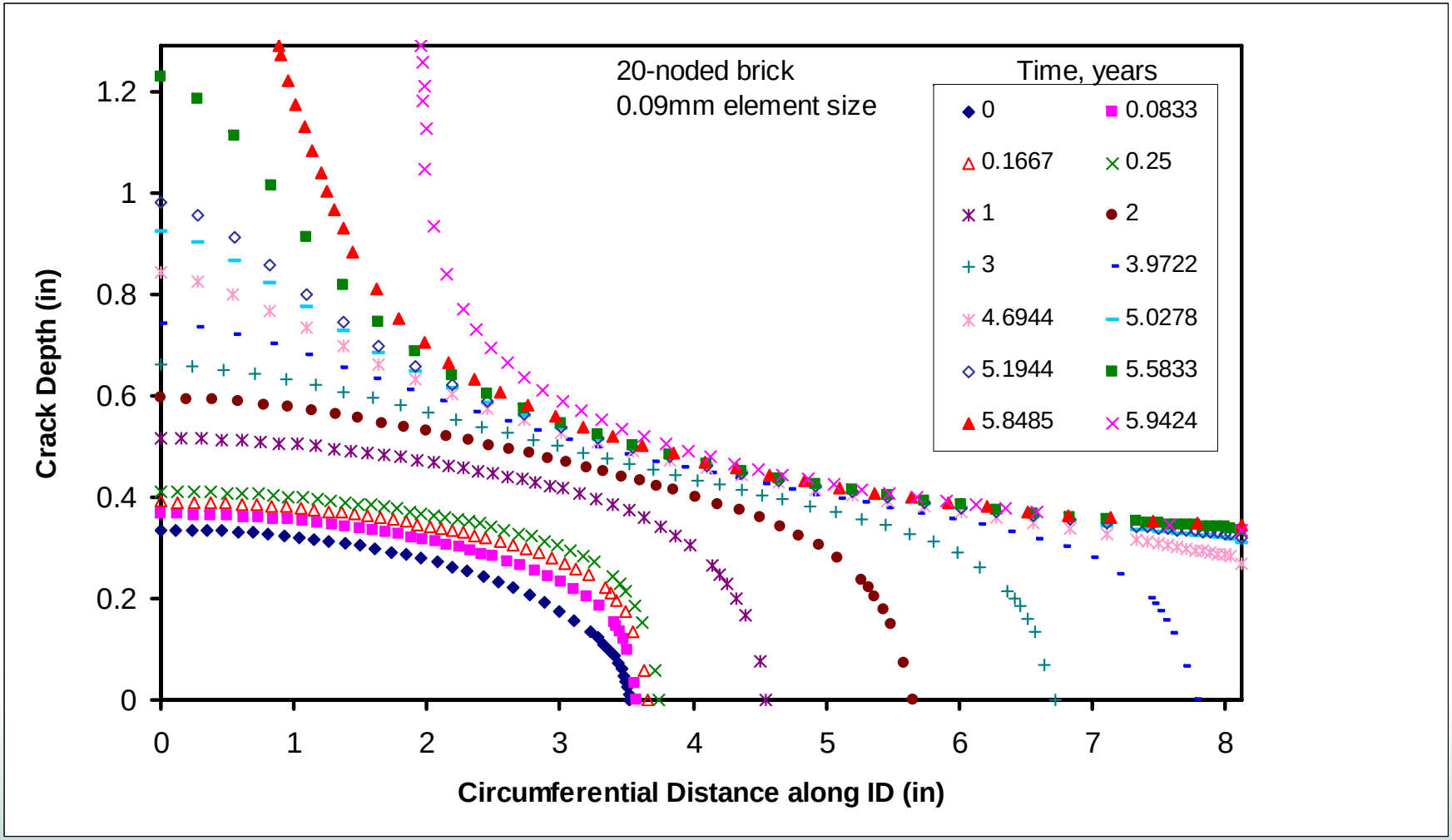

Crack Growth Comparison

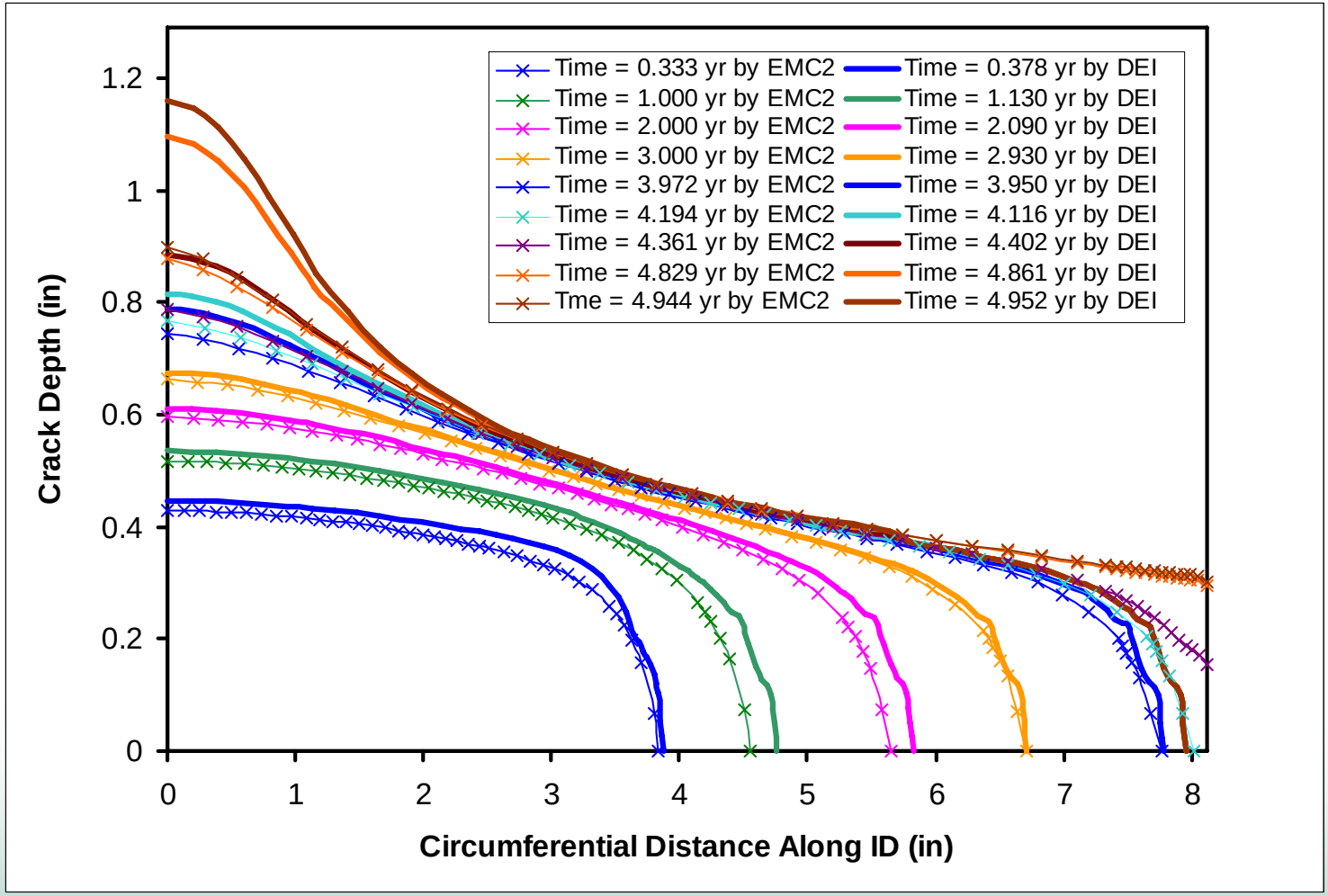

Time to leak = 5.65 yr (Emc²) versus 5.1 yr (DEI)

Main difference appear in last year before leakage

Innovative Structural Integrity Solutions

K-values for Phase 1

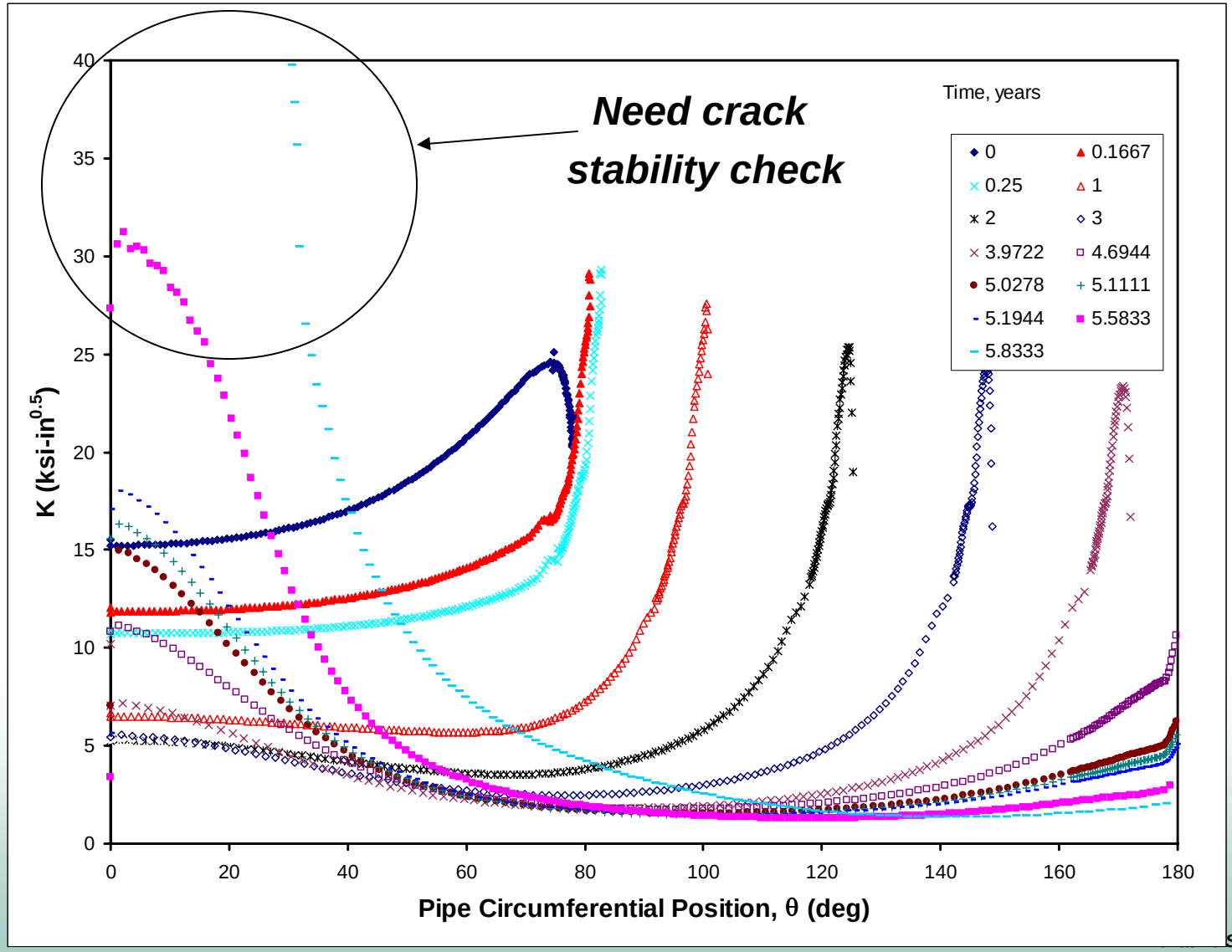

Plans

- ***Transition to TWC difficult in some cases – Need to work out this issue***
- ***Still some meshing issues with medium length complex cracks***
- ***Development of time step optimization, currently used one month as maximum.***
- ***Verification of arbitrary surface crack with membrane and bending only – eliminate WRS uncertainty***
- ***Critical crack size calculations***