LOGIC SYMBOLS

SYMBOL	LOGIC FUNCTION	DESCRIPTION
	OR	A DEVICE WHICH PRODUCES AN OUTPUT WHEN ANY ONE INPUT (OR MORE) EXISTS.
	NOT	A DEVICE WHICH PRODUCES AN OUTPUT ONLY WHEN THE INPUT DOES NOT EXIST.
	AND	A DEVICE WHICH PRODUCES AN OUTPUT ONLY WHEN EVERY INPUT EXISTS.
2/3	COINCIDENCE (2 OUT OF 3 SHOWN)	A DEVICE WHICH PRODUCES AN OUTPUT WHEN THE PRESCRIBED NUMBER (OR MORE) OF INPUTS EXIST (EXAMPLE 2 INPUTS MUST EXIST FOR AN OUTPUT).
	ADJUSTABLE TIME DELAY	A DEVICE WHICH PRODUCES AN OUTPUT FOLLOWING A DEFINITE INTENTIONAL TIME DELAY AFTER RECIVING AN INPUT.
	OFF RETURN MEMORY	A DEVICE WHICH RETAINS THE CONDITION OF OUTPUT CORRESPONDING TO THE LAST ENERGIZED INPUT, EXCEPT UPON INTERRUPTION OF POWER IT RETURNS TO THE OFF CONDITION.
	RETENTIVE MEMORY	A DEVICE WHICH RETAINS THE CONDITION OF OUTPUT CORRESPONDING TO THE LAST ENERGIZED INPUT (REGARDLESS OF POWER INTERRUPTION) - UPON INTERRUPTION OF POWER, CONDITION STATUS IS MAINTAINED (NO RESET OCCURS) AND THE SAME OUTPUT SIGNAL IS RE-ESTABLISHED WHEN POWER IS RESTORED.
L R	RETENTIVE MEMORY WITH ACTUATION BLOCK	A DEVICE HAVING RETENTIVE MEMORY AND ACTUATION SIGNAL BLOCK LOGIC FUNCTIONS AS INDICATED BY THE DIAGRAM BELOW.

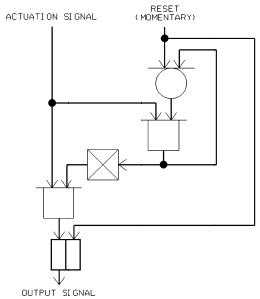

ANALOG INPUT / CONTROL LOGIC INPUT / ANALOG OUTPUT	ANALOG GATE	A DEVICE WHICH PERMITS AN ANALOG SIGNAL TO PASS IN AN ISOLATED CIRCUIT IF THE CONTROL LOGIC INPUT EXISTS.

ADDITIONAL SYMBOLS

- PB 143A — INSTRUMENT CHANNEL BISTABLE
- OUTPUT INDICATOR
- BISTABLE OUTPUT IS A LOGIC "1" WHEN THE MEASURED PARAMETER IS GREATER THAN THE SETPOINT VALUE.
- BISTABLE OUTPUT IS A LOGIC "1" WHEN THE MEASURED PARAMETER IS LESS THAN THE SETPOINT VALUE.
- BISTABLE OUTPUT IS A LOGIC "1" THEN THE MEASURED PARAMETER DEVIATES FROM THE NORMAL VALUE BY MORE THAN THE SETPOINT AMOUNTS
- OR — OR — SAME AS ABOVE EXCEPT WITH AN AUTOMATICALLY ADJUSTED SETPOINT
- OR — OR — SAME AS ABOVE EXCEPT WITH REQUIRED HYSTERESIS.
- 27 — NON-INSTRUMENT BISTABLE
- OUTPUT INDICATOR (SAME AS EXPLAINED ABOVE)
- A 2 — ALARM ANNUNCIATOR (ALARMS ON THE SAME SHEET WITH THE SAME SUBSCRIPT SHARE A COMMON ANNUNCIATOR WINDOW)
- A — REACTOR TRIP "FIRST OUT" ANNUNCIATOR
- T — TURBINE TRIP "FIRST OUT" ANNUNCIATOR
- T — INDICATOR LAMP
  A - ACTUATION STATUS LIGHTS, T - TRIP STATUS LIGHTS,
  P - PERMISSIVE STATUS LIGHTS, B - BYPASS STATUS LIGHTS
- C — COMPUTER INPUT
- LOGIC INFORMATION TRANSMISSION
- ANALOG INFORMATION TRANSMISSION
- I — ANALOG DISPLAY
  I - ANALOG INDICATOR, R - RECORDER, R2 - RECORDER 2 PEN,
  R3 - RECORDER 3 PEN, R8 - RECORDER 8 POINT
- Σ — ANALOG SUMMER

DEVICE FUNCTION LETTERS AND NUMBERS

FB	FLOW CHANNEL
LB	LEVEL CHANNEL
NC	NUCLEAR CHANNEL
PB	PRESSURE CHANNEL
RC	RADIATION CHANNEL
SB	SPEED CHANNEL
TB	TEMPERATURE CHANNEL
ZB	POSITION CHANNEL
Z0	ELECTRIC OPERATED VALVE
27	UNDERVOLTAGE RELAY
33	POSITION SWITCH
52	AC CIRCUIT BREAKER
63	PRESSURE SWITCH
71	LEVEL SWITCH
80	FLOW SWITCH
81	UNDERFREQUENCY RELAY

GENERAL NOTES (FOR ALL SHEETS)

1. ON ALL LOGIC CIRCUITS THE INDICATED ACTUATION OF A SYSTEM OR DEVICE OCCUR WHEN A LOGIC "1" SIGNAL IS PRESENT EXCEPT WHERE INDICATED OTHERWISE. ALL BISTABLES ARE "DE-ENERGIZED TO ACTUATE" SUCH THAT A LOGIC 1 SIGNAL IS DEFINED TO BE PRESENT WHEN THE BISTABLE OUTPUT VOLTAGE IS OFF.
2. EXCEPT WHERE INDICATED OTHERWISE, THE FOLLOWING IS TRUE: ALL LOGIC CIRCUITS ARE REDUNDANT, THAT IS, EVERY LOGIC CIRCUIT SHOWN HAS A DUPLICATE LOCATED IN A SEPARATE CABINET. ALL BISTABLES, CIRCUIT BREAKERS, ANNUNCIATORS, COMPUTER INPUTS, AND INDICATOR LAMPS ARE NOT REDUNDANT. MANUAL CONTROLS DO NOT HAVE REDUNDANT ACTUATORS, BUT DO HAVE REDUNDANT CONTACTS WHERE LOGIC IS REDUNDANT. ALL INDICATOR LAMPS, ANNUNCIATORS, AND COMPUTER INPUTS ARE CONNECTED TO BOTH TRAINS (WHERE LOGIC IS REDUNDANT) SO THAT A SIGNAL IN EITHER TRAIN WILL ACTUATE.
3. WHEREVER A PROCESS SIGNAL IS USED FOR CONTROL AND IS DERIVED FROM A PROTECTION CHANNEL, ISOLATION MUST BE PROVIDED.
4. THIS SET OF DRAWINGS ILLUSTRATES THE FUNTIONAL REQUIREMENTS OF THE REACTOR CONTROL AND PROTECTION SYSTEM, INCLUDING ENGINEERED SAFEGUARDS. THESE DRAWINGS DO NOT REPRESENT ACTUAL HARDWARE IMPLEMENTATION. FOR HARDWARE IMPLEMENTATION, REFER TO THE FOLLOWING LIST:

FUNCTIONAL DIAGRAM	BLOCK OR WIRING DIAGRAM
REACTOR PROTECTION SYSTEM (SHEETS 1 TO 8 AND 15 TO 16)	DRAWING NUMBERS: 5655048, 5655050, 565051, 5756037, 1189E15, 271C335, 7243050, 1084H37
REACTOR CONTROL SYSTEM SHEETS 9 TO 14 AND 17 TO 18)	DRAWING NUMBERS: 5655052, 271C336, 8756037

5. FOR THIS SET OF DRAWINGS ALL SWITCHES, PUSHBUTTONS, ANNUNCIATORS, AND INDICATORS (EXCEPT FOR THE N.E.S. PROCESS SYSTEMS INDICATORS, CONTROLLERS, AND MANUAL-AUTO STATIONS) WHICH ARE MOUNTED ON THE MAIN CONTROL BOARD ARE SUPPLIED BY OTHERS. IN ADDITION TO THE ABOVE, SCOPE BY OTHERS IS ALSO INDICATED DIRECTLY ON SHEETS WITHIN THIS SET.

INDEX

TITLE	SH. NO.	SUBS								
INDEX AND SYMBOLS	1	1	2	3	4	5	6			
REACTOR TRIP SIGNALS	2	1	2	3	3	3	4			
NUCLEAR INSTR. AND MANUAL TRIP SIGNALS	3	1	1	1	1	2	2			
NUCLEAR INSTR. PERMISSIVES AND BLOCKS	4	1	1	2	2	3	3			
PRIMARY COOLANT SYSTEM TRIP SIGNALS	5	1	2	3	3	3	3			
PRESSURIZER TRIP SIGNALS	6	1	1	2	3	3	3			
STEAM GENERATOR TRIP SIGNALS	7	1	1	2	2	3	3			
SAFEGUARDS ACTUATION SIGNALS	8	1	2	3	3	3	3			
ROD CONTROLS & ROD BLOCKS	9	1	2	3	3	3	4			
STEAM DUMP CONTROL	10	1	2	3	3	3	3			
PRESSURIZER PRESSURE & LEVEL CONTROL	11	1	2	3	4	4	4			
PRESSURIZER HEATER CONTROL	12	1	2	2	2	2	2			
FEEDWATER CONTROL & ISOLATION	13	1	2	3	3	4	4			
FEEDWATER CONTROL & ISOLATION	14	1	2	3	3	3	3			
AUXILIARY FEEDWATER PUMPS STARTUP	15	1	2	3	3	4	4			
TURBINE TRIPS, RUNBACKS & OTHER SIGNALS	16	1	2	3	3	3	3			
PRESSURIZER PRESSURE RELIEF SYS. (TRAIN A)	17	-	-	-	1	1	1			
PRESSURIZER PRESSURE RELIEF SYS. (TRAIN B)	18	-	-	-	1	1	1			

ESSENTIAL DRAWING

REVISED / ISSUED — INCORPORATED CHG. DOC. — CHANGE PKG. NO. — THIS DWG. SUPERSEDES M-744-00018 REV.05 — THIS DWG. SUPERSEDED BY REV.

REVISION NOTES: ELECTRONICALLY CONVERTED PER AP 05-010

REV. 1

WOLF CREEK NUCLEAR OPERATING CORPORATION

ELECTRONIC APPROVAL

USAR FIG. 7.2-1-01

M-744-00018 W06

SNUPPS PROJECTS FUNCTIONAL DIAGRAM INDEX AND SYMBOLS

SCALE	DRAWING NUMBER	SHEET	REV
NONE	7250D64	1	

22X34 D SIZE

Released by Document Services Release Date: 12/04/02

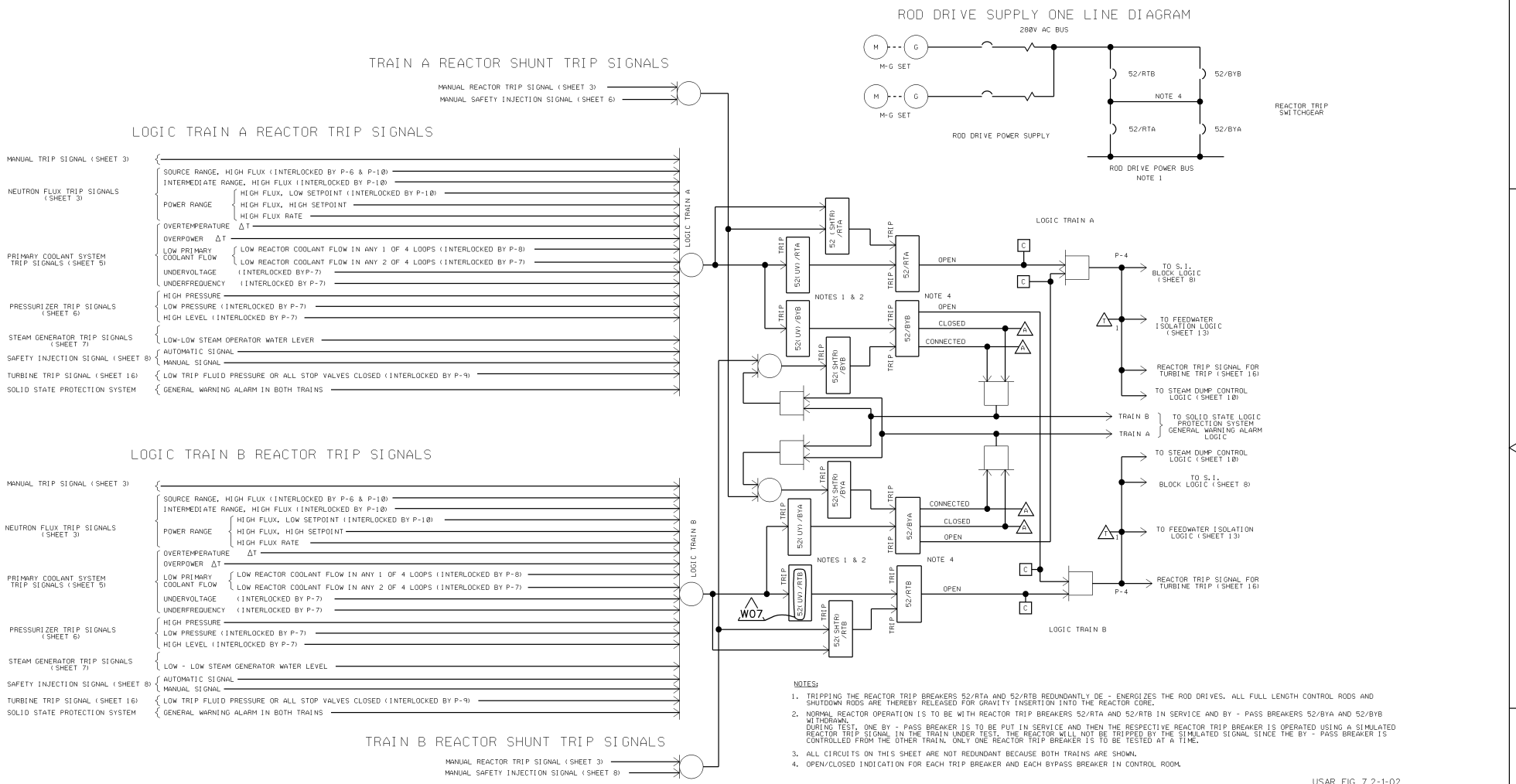

NOTES:

1. TRIPPING THE REACTOR TRIP BREAKERS 52/RTA AND 52/RTB REDUNDANTLY DE - ENERGIZES THE ROD DRIVES. ALL FULL LENGTH CONTROL RODS AND SHUTDOWN RODS ARE THEREBY RELEASED FOR GRAVITY INSERTION INTO THE REACTOR CORE.
2. NORMAL REACTOR OPERATION IS TO BE WITH REACTOR TRIP BREAKERS 52/RTA AND 52/RTB IN SERVICE AND BY - PASS BREAKERS 52/BYA AND 52/BYB WITHDRAWN.
   DURING TEST, ONE BY - PASS BREAKER IS TO BE PUT IN SERVICE AND THEN THE RESPECTIVE REACTOR TRIP BREAKER IS OPERATED USING A SIMULATED REACTOR TRIP SIGNAL IN THE TRAIN UNDER TEST. THE REACTOR WILL NOT BE TRIPPED BY THE SIMULATED SIGNAL SINCE THE BY - PASS BREAKER IS CONTROLLED FROM THE OTHER TRAIN. ONLY ONE REACTOR TRIP BREAKER IS TO BE TESTED AT A TIME.
3. ALL CIRCUITS ON THIS SHEET ARE NOT REDUNDANT BECAUSE BOTH TRAINS ARE SHOWN.
4. OPEN/CLOSED INDICATION FOR EACH TRIP BREAKER AND EACH BYPASS BREAKER IN CONTROL ROOM.

USAR FIG. 7.2-1-02

ESSENTIAL DRAWING

REVISED INC. CHNG. ISSUED CHNG. DOC. NO.
THIS DWG. SUPERSEDES: REV.
VENDOR MANUAL: PAGE(S)
SUPPLIER DWG. NO.:
REVISION NOTES: PIR 2005-3346

WOLF CREEK NUCLEAR OPERATING CORPORATION

DRAWING NUMBER: M-744-00019 REVISION: W07 SHEET NO.:

ELECTRONIC APPROVAL

SNUPPS PROJECTS
FUNCTIONAL DIAGRAM
REACTOR TRIP SIGNALS

SCALE	DRAWING NUMBER	SHEET	REV
NONE	7250D64	2	

22X34 D SIZE

Released by Document Services Release Date: 01/31/06

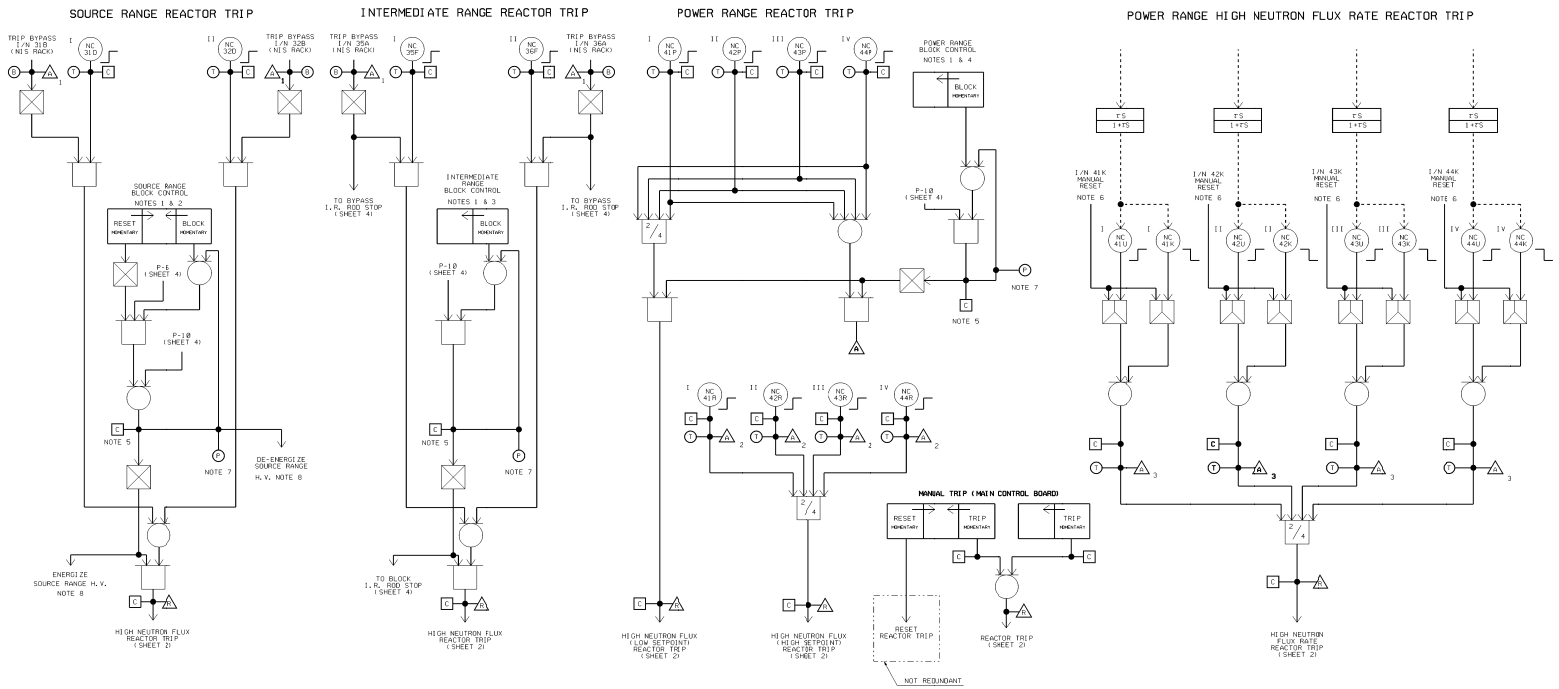

NOTES

1. THE REDUNDANT MANUAL BLOCK CONTROLS CONSIST OF TWO CONTROLS ON THE CONTROL BOARD FOR EACH RANGE. ONE FOR EACH TRAIN.
2. I/N 33A IS IN LOGIC TRAIN A.
   I/N 33B IS IN LOGIC TRAIN B.
3. I/N 38A IS IN LOGIC TRAIN A.
   I/N 38B IS IN LOGIC TRAIN B.
4. I/N 47A IS IN LOGIC TRAIN A.
   I/N 47B IS IN LOGIC TRAIN B.
5. TWO COMPUTER INPUTS ARE CONNECTED TO THIS CIRCUIT. INDIVIDUAL FOR EACH TRAIN.
6. MANUAL RESET CONTROLS CONSIST OF FOUR MOMENTARY CONTROLS IN THE CONTROL ROOM. ONE CONTROL FOR EACH INSTRUMENT CHANNEL.
7. TWO PERMISSIVE STATUS LIGHTS ARE CONNECTED TO THIS CIRCUIT. INDIVIDUAL FOR EACH TRAIN.
8. EACH SOURCE RANGE FLUX DETECTOR IS ENERGIZED AND DE-ENERGIZED BY LOGIC OUTPUT FROM A SINGLE TRAIN. THE TWO SOURCE RANGE FLUX DETECTORS (N-31 AND N-32) ARE ON SEPARATE TRAINS.

USAR FIG. 7.2-1-03

M-744-00020 W06

ESSENTIAL DRAWING

⊗ REVISED / O ISSUED	INCORPORATED DFG.ERG.	CHANGE FILE NO.	THIS DWG. SUPERSEDES M-744-00020 REV. 05 THIS DWG. SUPERSEDED BY REV.

REVISION NOTES: ELECTRONICALLY CONVERTED PER AP 05-010

WOLF CREEK NUCLEAR OPERATING CORPORATION

ELECTRONIC APPROVAL

SNUPPS PROJECTS
FUNCTIONAL DIAGRAM
NUCLEAR INSTR. & MANUAL TRIP SIGNALS

SCALE	DRAWING NUMBER	SHEET	REV
NONE	7250D64	3	

34X44 E SIZE

Released by Document Services Release Date: 12/04/02

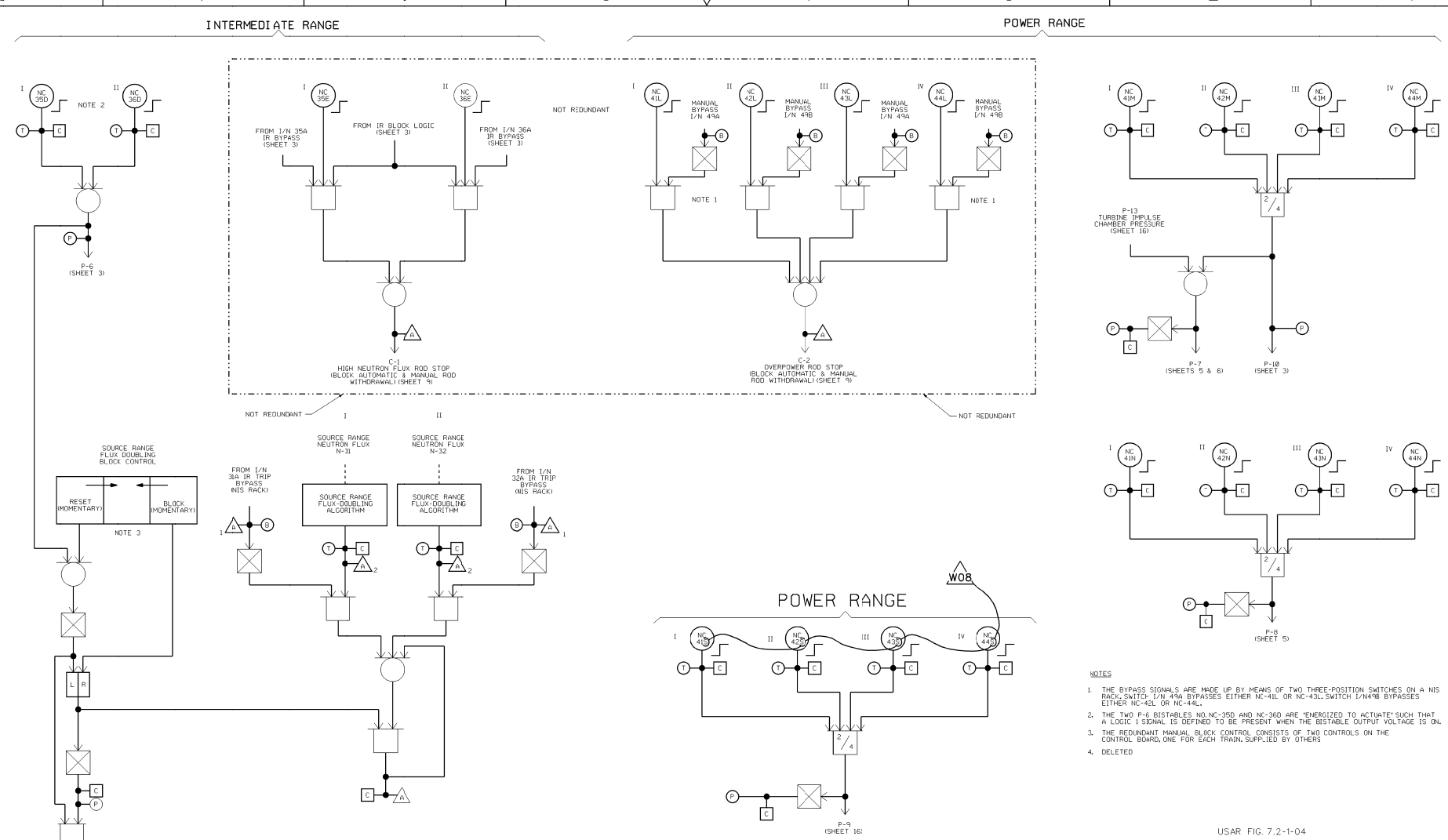

NOTES

1. THE BYPASS SIGNALS ARE MADE UP BY MEANS OF TWO THREE-POSITION SWITCHES ON A NIS RACK. SWITCH I/N 49A BYPASSES EITHER NC-41L OR NC-43L. SWITCH I/N49B BYPASSES EITHER NC-42L OR NC-44L.
2. THE TWO P-6 BISTABLES NO.NC-35D AND NC-36D ARE "ENERGIZED TO ACTUATE" SUCH THAT A LOGIC I SIGNAL IS DEFINED TO BE PRESENT WHEN THE BISTABLE OUTPUT VOLTAGE IS ON.
3. THE REDUNDANT MANUAL BLOCK CONTROL CONSISTS OF TWO CONTROLS ON THE CONTROL BOARD, ONE FOR EACH TRAIN, SUPPLIED BY OTHERS
4. DELETED

USAR FIG. 7.2-1-04

ESSENTIAL DRAWING

⊗ REVISED: INC.: PR 2003276T ○ ISSUED CHNG. DOC	CHNG. PKG. NO.	THIS DWG. SUPERSEDES: REV. VENDOR MANUAL: PAGE(S): SUPPLIER DWG. NO.: 7250D64 SHT. 4	ELECTRONIC APPROVAL
REVISION NOTES:			
WOLF CREEK NUCLEAR OPERATING CORPORATION	DRAWING NUMBER: M-744-00021	REVISION: W08	SHEET NO.:

SNUPPS PROJECTS FUNCTIONAL DIAGRAM NUCLEAR INSTR. PERMISSIVES & BLOCKS

SCALE	DRAWING NUMBER	SHEET	REV
NONE	7250D64	4	

22X34 D SIZE

Released by Document Services Release Date: 11/23/03

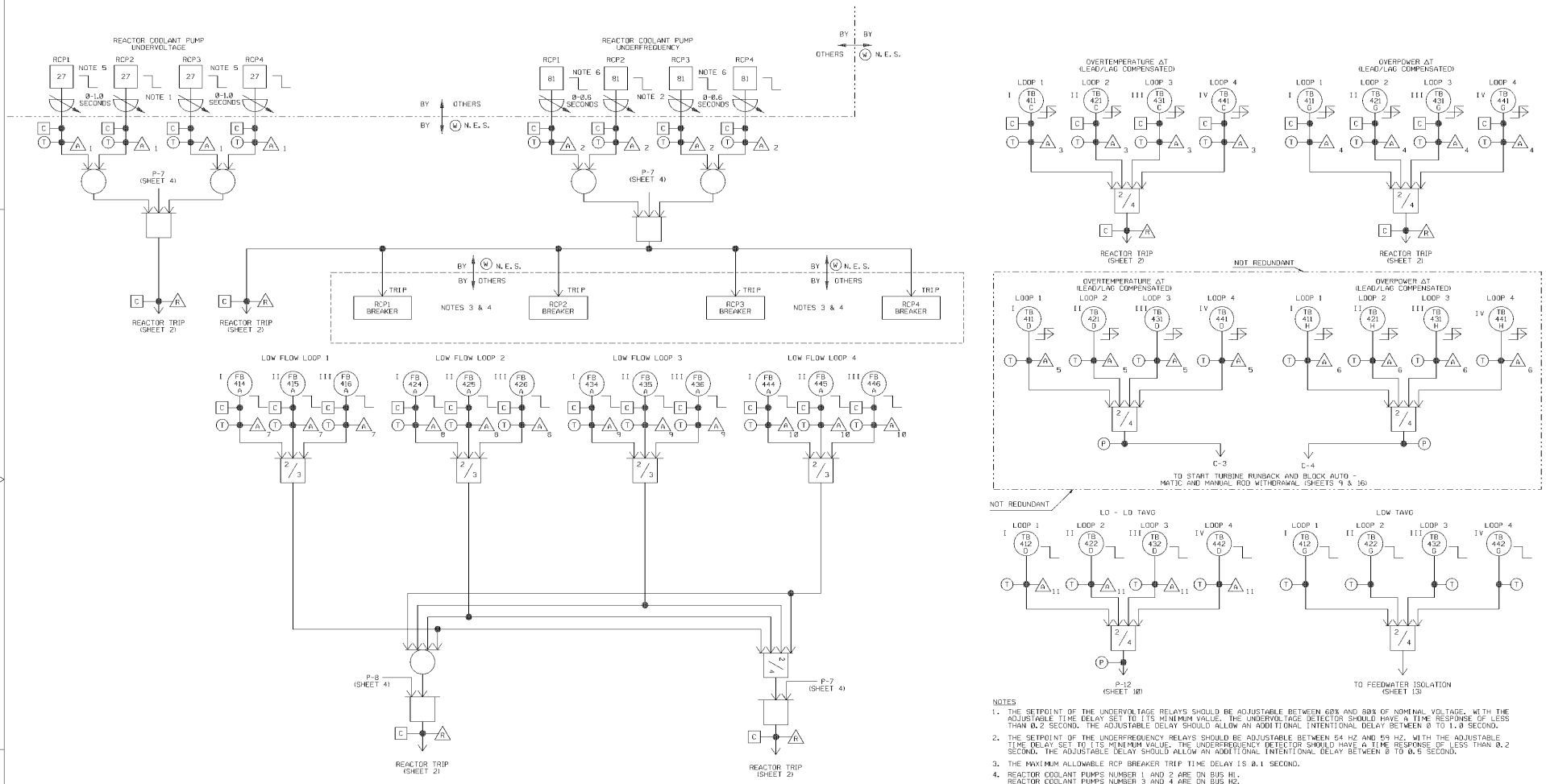

NOTES

1. THE SETPOINT OF THE UNDERVOLTAGE RELAYS SHOULD BE ADJUSTABLE BETWEEN 60% AND 80% OF NOMINAL VOLTAGE. WITH THE ADJUSTABLE TIME DELAY SET TO ITS MINIMUM VALUE. THE UNDERVOLTAGE DETECTOR SHOULD HAVE A TIME RESPONSE OF LESS THAN 0.2 SECOND. THE ADJUSTABLE DELAY SHOULD ALLOW AN ADDITIONAL INTENTIONAL DELAY BETWEEN 0 TO 1.0 SECOND.
2. THE SETPOINT OF THE UNDERFREQUENCY RELAYS SHOULD BE ADJUSTABLE BETWEEN 54 HZ AND 59 HZ. WITH THE ADJUSTABLE TIME DELAY SET TO ITS MINIMUM VALUE. THE UNDERFREQUENCY DETECTOR SHOULD HAVE A TIME RESPONSE OF LESS THAN 0.2 SECOND. THE ADJUSTABLE DELAY SHOULD ALLOW AN ADDITIONAL INTENTIONAL DELAY BETWEEN 0 TO 0.5 SECOND.
3. THE MAXIMUM ALLOWABLE RCP BREAKER TRIP TIME DELAY IS 0.1 SECOND.
4. REACTOR COOLANT PUMPS NUMBER 1 AND 2 ARE ON BUS H1.
   REACTOR COOLANT PUMPS NUMBER 3 AND 4 ARE ON BUS H2.
5. THE UNDERVOLTAGE SENSORS (POTENTIAL TRANSFORMERS) MUST BE LOCATED ON THE MOTOR SIDE OF THE RCP CIRCUIT BREAKERS TO DETECT THE TRIP OF THE RCP CIRCUIT BREAKERS IN ADDITION TO BUS UNDERVOLTAGE.
6. THE UNDERFREQUENCY SENSORS MAY BE LOCATED ON THE MOTOR SIDE OF THE RCP CIRCUIT BREAKERS.

ESSENTIAL DRAWING

⊗ REVISED / ⊙ ISSUED	INCORPORATED / CHG. DOC.	CHANGE / PKG. NO.	THIS DWG. SUPERSEDES M-744-00022 REV. 05 / THIS DWG. SUPERSEDED BY REV.

REVISION NOTES: ELECTRONICALLY CONVERTED PER AP 05-010

REV 1 / 1W

WOLF CREEK NUCLEAR OPERATING CORPORATION

ELECTRONIC APPROVAL

USAR FIG. 7.2-1-05

M-744-00022 W06

SNUPPS PROJECTS
FUNCTIONAL DIAGRAM
PRIMARY COOLANT SYSTEM TRIP SIGNALS

SCALE	DRAWING NUMBER	SHEET	REV
NONE	7250D64	5	

22X34 D SIZE

Released by Document Services Release Date: 12/04/02

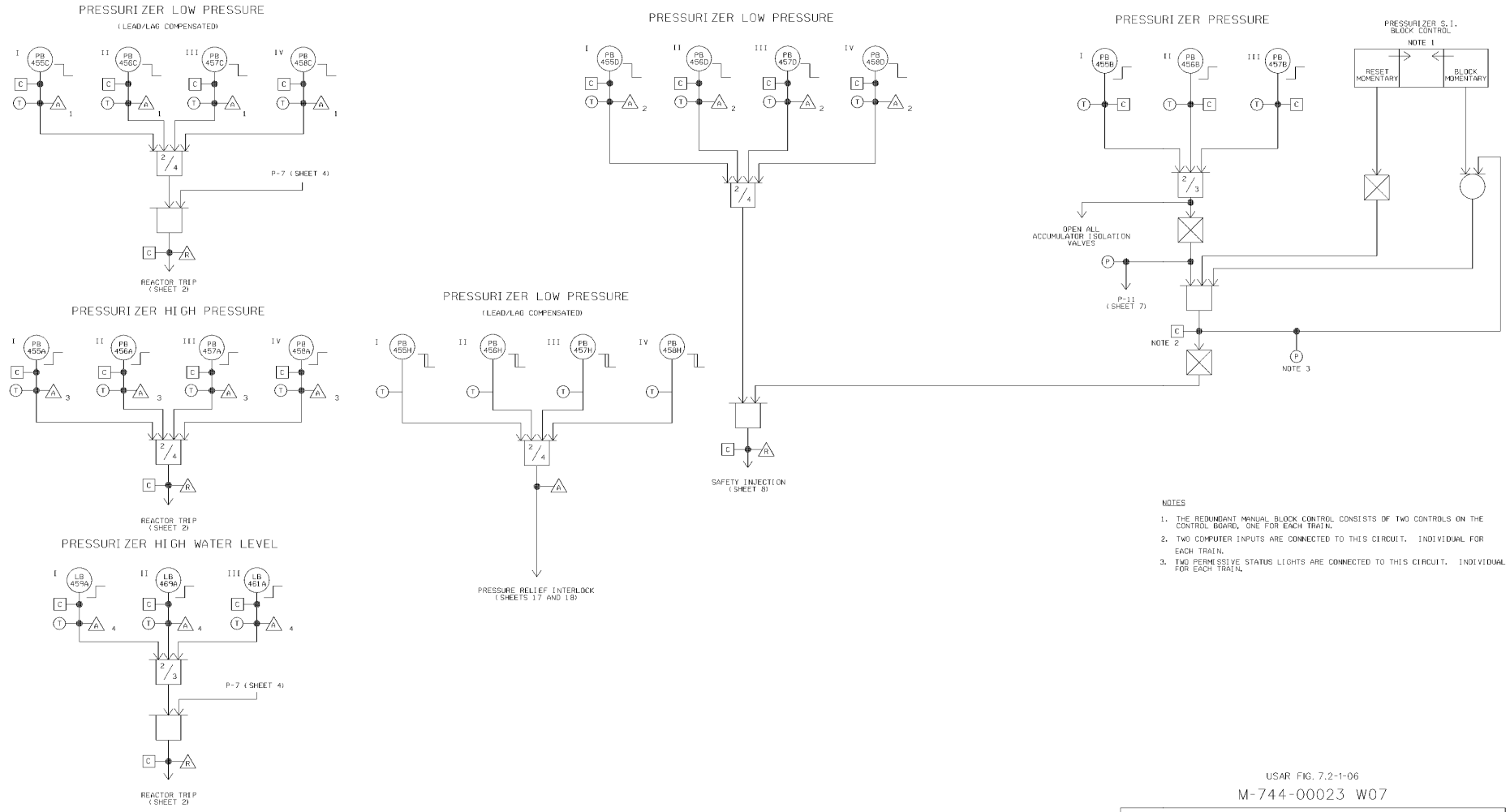

NOTES

1. THE REDUNDANT MANUAL BLOCK CONTROL CONSISTS OF TWO CONTROLS ON THE CONTROL BOARD, ONE FOR EACH TRAIN.
2. TWO COMPUTER INPUTS ARE CONNECTED TO THIS CIRCUIT. INDIVIDUAL FOR EACH TRAIN.
3. TWO PERMISSIVE STATUS LIGHTS ARE CONNECTED TO THIS CIRCUIT. INDIVIDUAL FOR EACH TRAIN.

USAR FIG. 7.2-1-06

M-744-00023 W07

ESSENTIAL DRAWING

⊗ REVISED / ⊙ ISSUED	INCORPORATED / CHG. DOC.	CHANGE / PKG. NO.	THIS DWG. SUPERSEDES M-744-00023 REV. W06 / THIS DWG. SUPERSEDED BY REV.

REVISION NOTES: ELECTRONICALLY CONVERTED PER AP 05-010

REV. W07

WOLF CREEK NUCLEAR OPERATING CORPORATION

ELECTRONIC APPROVAL

SNUPPS PROJECTS
FUNCTIONAL DIAGRAM
PRESSURIZER TRIP SIGNALS

SCALE	DRAWING NUMBER	SHEET	REV
NONE	7250D64	6	

22X34 D SIZE

Released by Document Services Release Date: 12/04/02

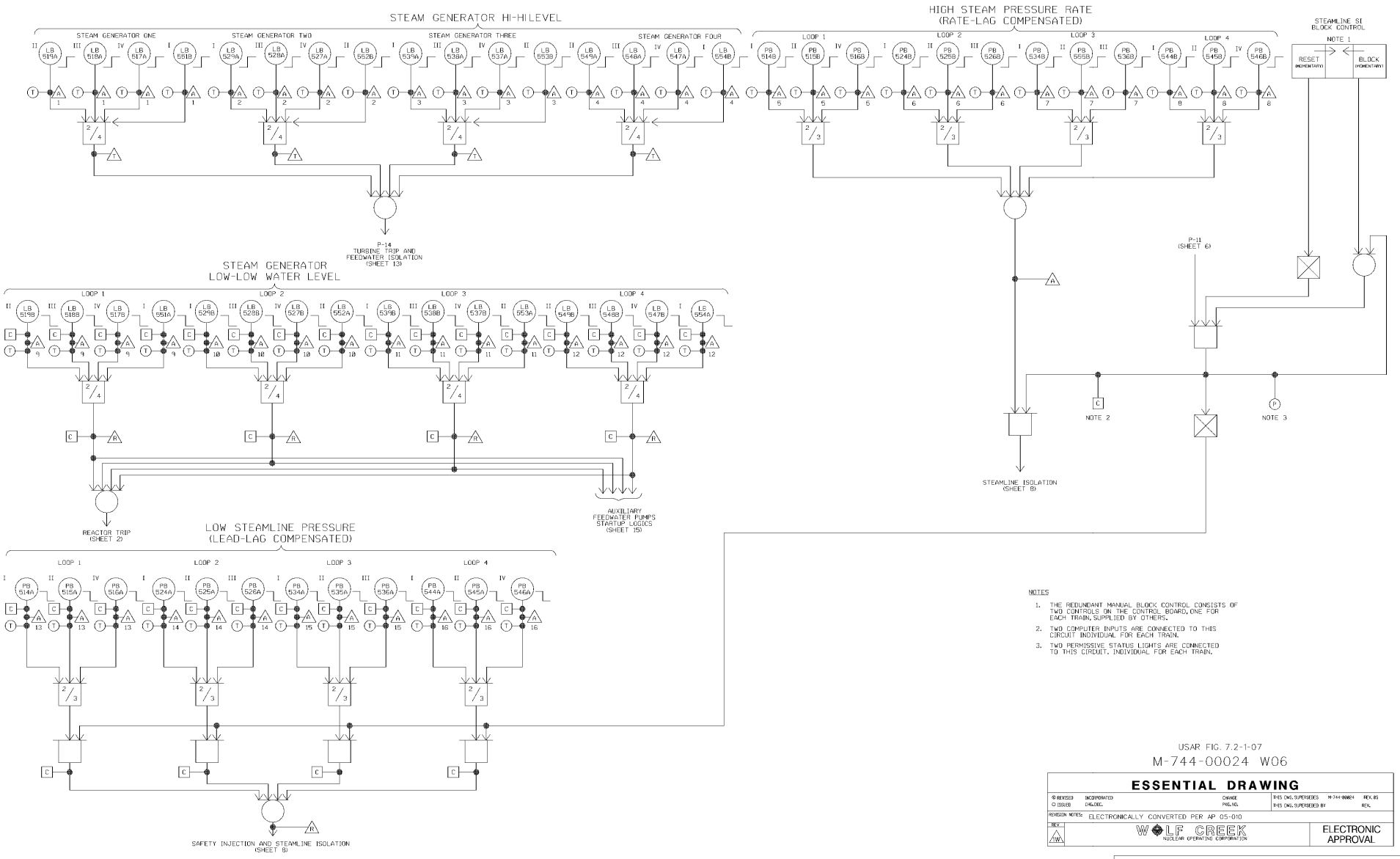

NOTES

1. THE REDUNDANT MANUAL BLOCK CONTROL CONSISTS OF TWO CONTROLS ON THE CONTROL BOARD, ONE FOR EACH TRAIN, SUPPLIED BY OTHERS.
2. TWO COMPUTER INPUTS ARE CONNECTED TO THIS CIRCUIT INDIVIDUAL FOR EACH TRAIN.
3. TWO PERMISSIVE STATUS LIGHTS ARE CONNECTED TO THIS CIRCUIT, INDIVIDUAL FOR EACH TRAIN.

USAR FIG. 7.2-1-07

M-744-00024 W06

ESSENTIAL DRAWING

REVISED / ISSUED — INCORPORATED / CHG.DOC. — CHANGE / PKG.NO. — THIS DWG. SUPERSEDES M-744-00024 REV. 05 — THIS DWG. SUPERSEDED BY REV.

REVISION NOTES: ELECTRONICALLY CONVERTED PER AP 05-010

REV. W

WOLF CREEK NUCLEAR OPERATING CORPORATION

ELECTRONIC APPROVAL

SNUPPS PROJECTS
FUNCTIONAL DIAGRAM
STEAM GENERATOR TRIP SIGNALS

SCALE	DRAWING NUMBER	SHEET	REV
NONE	7250D64	7	

22X34 D SIZE

Released by Document Services Release Date: 12/04/02

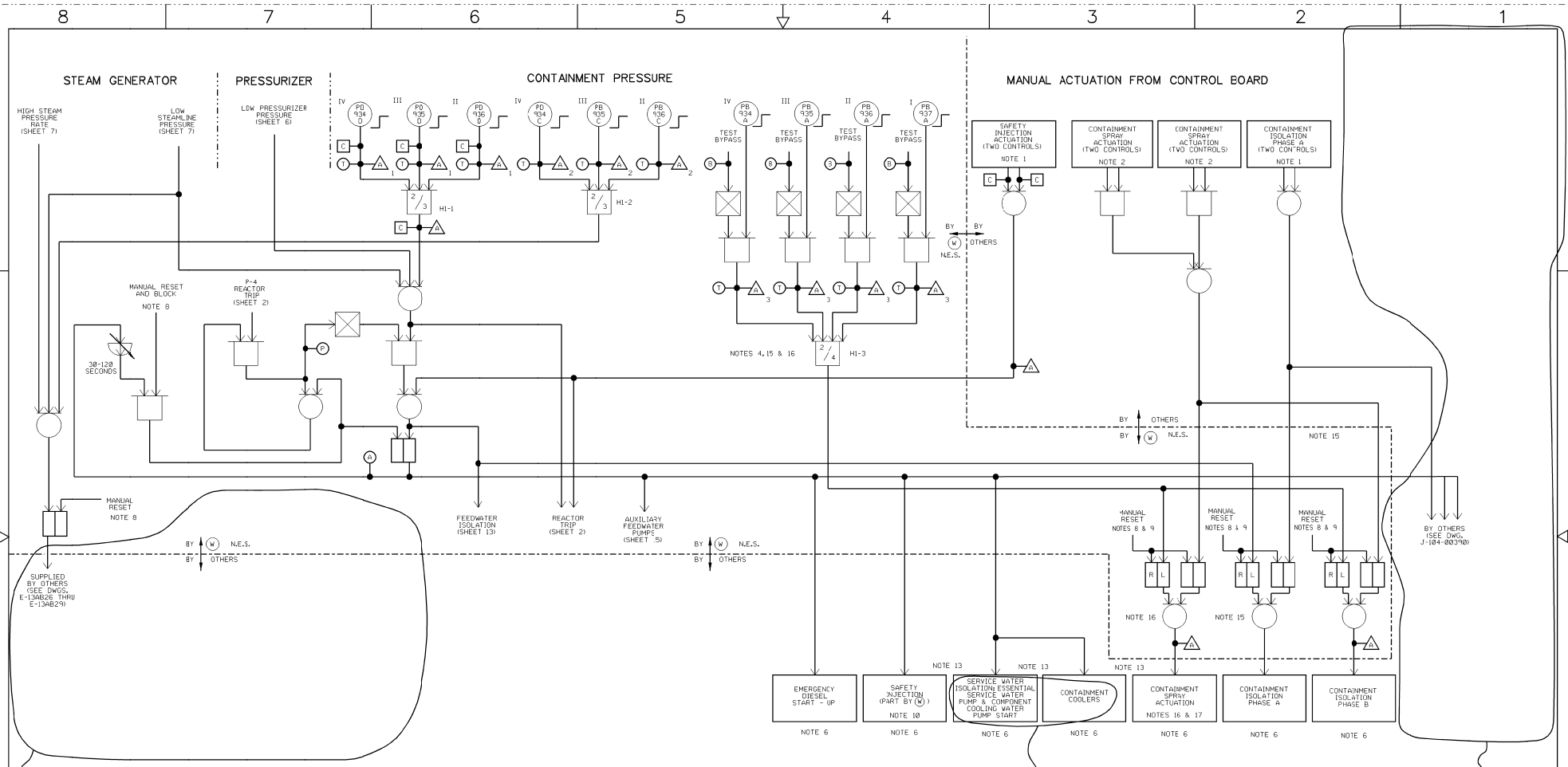

NOTES

1. TWO MOMENTARY CONTROLS ON THE CONTROL BOARD. OPERATING EITHER CONTROL WILL ACTUATE.
2. THE MANUAL SPRAY ACTUATION CONSISTS OF FOUR MOMENTARY CONTROLS. ACTUATION WILL OCCUR ONLY IF TWO ASSOCIATED CONTROLS ARE OPERATED SIMULTANEOUSLY.
3. DELETED.
4. CONTAINMENT PRESSURE BISTABLES FOR SPRAY ACTUATION ARE ENERGIZE TO ACTUATE (OTHER BISTABLES ARE DE-ENERGIZE TO ACTUATE).
5. DELETED.
6. COMPONENTS ARE ALL INDIVIDUALLY SEALED IN (LATCHED), SO THAT LOSS OF THE ACTUATION SIGNAL WILL NOT CAUSE THESE COMPONENTS TO RETURN TO THE CONDITION HELD PRIOR TO THE ADVENT OF THE ACTUATION SIGNAL.
7. DELETED.
8. THE REDUNDANT MANUAL RESET CONSISTS OF TWO MOMENTARY CONTROLS ON THE CONTROL BOARD. ONE FOR EACH TRAIN.
9. SUPPLIED BY OTHERS.
10. SAFETY INJECTION SEQUENCE REQUIREMENTS (IF SEQUENCING IS NECESSARY) ARE SPECIFIED BY W NUCLEAR ENERGY SYSTEMS.
11. DELETED.
12. DELETED.
13. THE ACTUATION MAY BE DELAYED AND SEQUENCED IF THE EMERGENCY DIESEL POWER CAPABILITY IS LESS THAN THE TOTAL LOAD WITH ALL SYSTEMS STARTING. THE TIME DELAY(S), IF USED, MAY NOT EXCEED THE MAXIMUM STARTING TIME REQUIREMENTS FOR EACH SYSTEM.
14. DELETED.
15. SOME ENGINEERED SAFEGUARDS FUNCTIONS ARE NOT WITHIN THE FUNCTIONAL DESIGN SCOPE OF W NUCLEAR ENERGY SYSTEMS BUT ONLY SHOWN ON THIS SHEET AS THE FUNCTIONS ARE BUILT IN THE W SUPPLIED EQUIPMENT.
16. THE 2 OUT OF 4 COINCIDENCE, MEMORY, AND "OR" LOGIC ARE DUPLICATED WITHIN EACH TRAIN. SEPARATE OUTPUT RELAYS ARE ALSO PROVIDED IN EACH TRAIN, TO MINIMIZE FALSE CONTAINMENT SPRAY ONE OUTPUT RELAY SHOULD START THE PUMPS WHILE ANOTHER SHOULD OPEN THE SYSTEM VALVES.
17. THE CONTAINMENT SPRAY SYSTEM IS INDEPENDENT OF THE SAFETY INJECTION SYSTEM. THE SEQUENCE INTERLOCK IS SUCH THAT SPRAY WILL START WITHIN THE REQUIRED TIME INDEPENDENT OF THE SAFETY INJECTION SIGNAL STATUS.

USAR FIG. 7.2-1-08

ESSENTIAL DRAWING

REVISED INC. CHNG. 10395
ISSUED CHNG. PKG.
DOC. NO.
REVISION NOTES
THIS DWG. SUPERSEDES: REV.
VENDOR MANUAL: PAGE(S)
SUPPLIER DWG. NO.: 7250D64

WOLF CREEK NUCLEAR OPERATING CORPORATION

DRAWING NUMBER: M-744-00025 REVISION: W07 SHEET NO.:

ELECTRONIC APPROVAL

SNUPPS PROJECTS
FUNCTIONAL DIAGRAM
SAFEGUARDS ACTUATION SIGNALS

SCALE	DRAWING NUMBER	SHEET	REV
NONE	7250D64	8	

22X34 D SIZE

Released by Document Services Release Date: 12/16/02

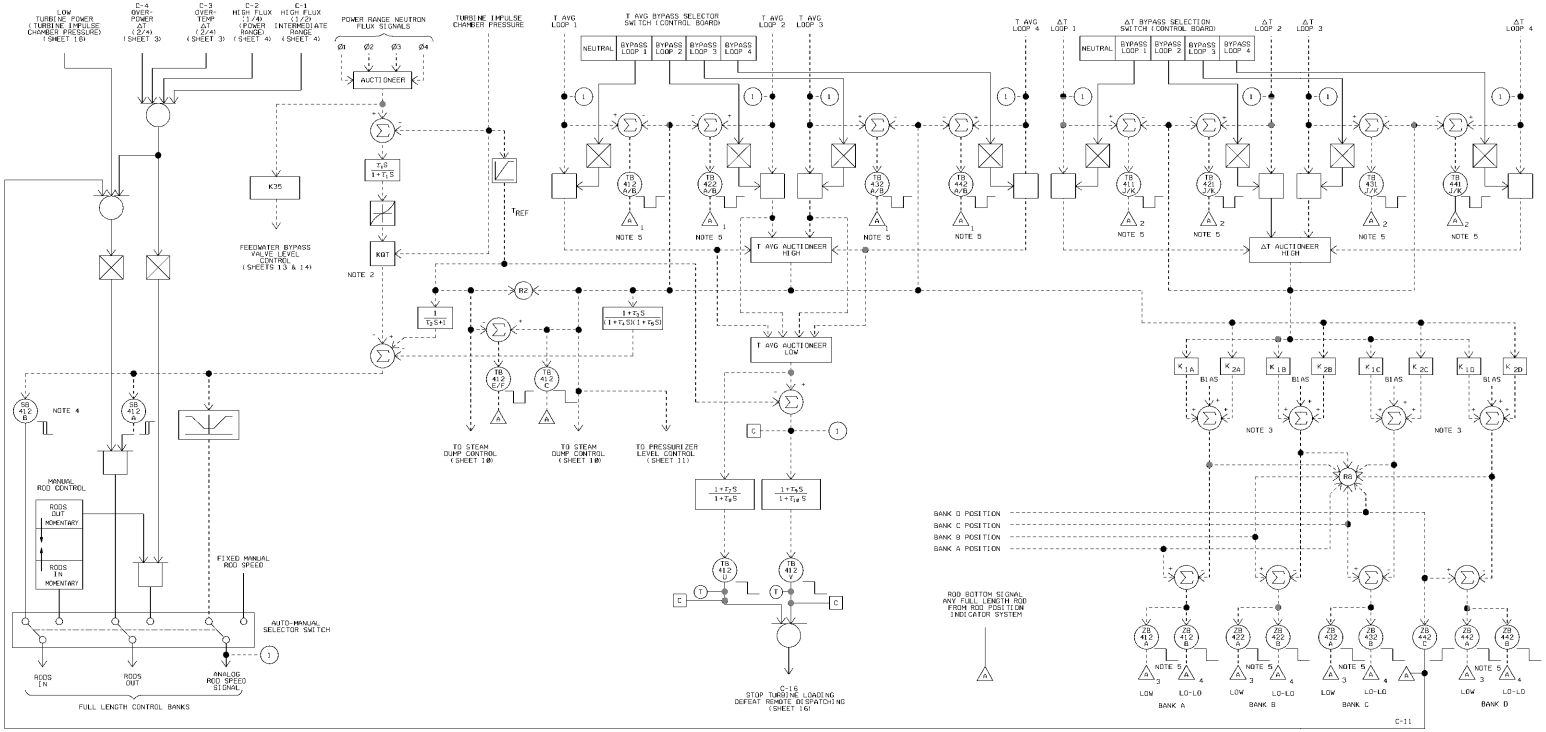

NOTES

1. ALL CIRCUITS ON THIS SHEET ARE NOT REDUNDANT.
2. KGT MAY VARY INVERSELY PROPORTIONAL TO LOAD WITH A FIXED LIMIT OR MAY VARY IN TWO DISCRETE STEPS WITH BREAK POINTS AT 30 TO 50% AND 60 TO 80% TURBINE LOAD.
3. THE SUMMER OUTPUTS HAVE FIXED MANUALLY ADJUSTABLE UPPER LIMITS.
4. THE ROD DIRECTION BISTABLES NO. SB-412A AND SB-412B ARE "ENERGIZED TO ACTUATE".
5. ALARM 1, ALARM 2, ALARM 3, AND ALARM 4 MUST HAVE REFLASH CAPABILITY.

USAR FIG. 7.2-1-09

M-744-00026 W06

ESSENTIAL DRAWING

☑ REVISED: INCORPORATED ☐ CANCEL: ANALOG	CHANGE: PNL/KL	THIS DWG. SUPERSEDES: M-744-00026	REV. 00
		THIS DWG. SUPERSEDED BY:	REV.
REVISION NOTES: ELECTRONICALLY CONVERTED PER AP 05-010			
REV A	WOLF CREEK NUCLEAR OPERATING CORPORATION	ELECTRONIC APPROVAL	

SNUPPS PROJECTS
FUNCTIONAL DIAGRAM
ROD CONTROLS & ROD BLOCKS

SCALE	DRAWING NUMBER	SHEET	REV
NONE	7250D64	9	A

34X44 E SIZE

Released by Document Services Release Date: 12/04/02

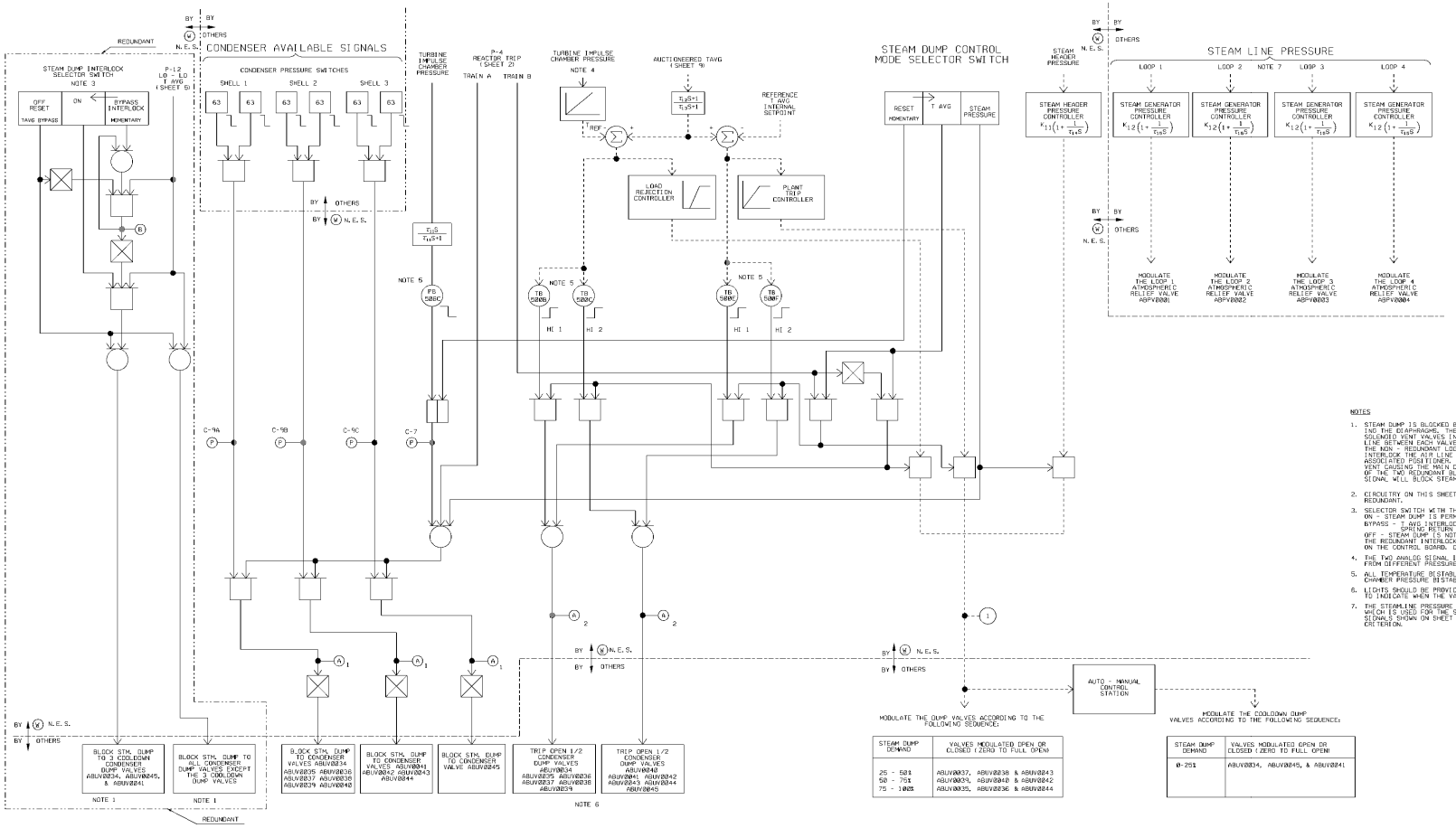

STEAM DUMP DEMAND	VALVES MODULATED OPEN OR CLOSED (ZERO TO FULL OPEN)
25 - 50%	ABUV0037, ABUV0038 & ABUV0043
50 - 75%	ABUV0039, ABUV0040 & ABUV0042
75 - 100%	ABUV0035, ABUV0036 & ABUV0044

STEAM DUMP DEMAND	VALVES MODULATED OPEN OR CLOSED (ZERO TO FULL OPEN)
0-25%	ABUV0034, ABUV0045, & ABUV0041

NOTES

1. STEAM DUMP IS BLOCKED BY BLOCKING AIR TO THE DUMP VALVES AND VENT - ING THE DIAPHRAGMS. THE REDUNDANT LOGIC OUTPUT OPERATES TWO SOLENOID VENT VALVES IN SERIES TO REDUNDANTLY INTERLOCK THE AIR LINE BETWEEN EACH VALVE DIAPHRAGM AND ITS ASSOCIATED POSITIONER. THE NON - REDUNDANT LOGIC OUTPUT OPERATES ONE SOLENOID VENT VALVE TO INTERLOCK THE AIR LINE BETWEEN EACH VALVE DIAPHRAGM AND ITS ASSOCIATED POSITIONER. THE SOLENOID VALVES ARE DE-ENERGIZE TO VENT CAUSING THE MAIN DUMP VALVE TO CLOSE IN FIVE SECONDS. EITHER OF THE TWO REDUNDANT BLOCK SIGNALS OR THE NON - REDUNDANT BLOCK SIGNAL WILL BLOCK STEAM DUMP INDEPENDENT OF THE OTHERS.
2. CIRCUITRY ON THIS SHEET IS NOT REDUNDANT EXCEPT WHERE INDICATED REDUNDANT.
3. SELECTOR SWITCH WITH THE FOLLOWING THREE POSITIONS:
   ON - STEAM DUMP IS PERMITTED.
   BYPASS - T AVG INTERLOCK IS BYPASSED FOR LO-LO T AVG. SPRING RETURN TO ON POSITION
   OFF - STEAM DUMP IS NOT PERMITTED AND RESET T AVG BYPASS
   THE REDUNDANT INTERLOCK SELECTOR SWITCH CONSISTS OF TWO CONTROLS ON THE CONTROL BOARD. ONE FOR EACH TRAIN.
4. THE TWO ANALOG SIGNAL INPUTS COMING FROM TURBINE PRESSURE MUST COME FROM DIFFERENT PRESSURE TAPS TO MEET THE SINGLE FAILURE CRITERION.
5. ALL TEMPERATURE BISTABLES ON THIS SHEET AND THE TURBINE IMPULSE CHAMBER PRESSURE BISTABLE NO. PB-586C ARE "ENERGIZE TO ACTUATE".
6. LIGHTS SHOULD BE PROVIDED IN THE CONTROL ROOM FOR EACH DUMP VALVE TO INDICATE WHEN THE VALVE IS FULLY CLOSED OR FULLY OPEN.
7. THE STEAM LINE PRESSURE SIGNAL ORIGIN MUST BE DIFFERENT FROM THAT WHICH IS USED FOR THE STEAM LINE PRESSURE PROTECTION SIGNALS SHOWN ON SHEET 7 TO MEET THE SINGLE FAILURE CRITERION.

USAR FIG. 7.2-1-10

M-744-00027 W07

ESSENTIAL DRAWING

REVISED: CHANGE NO. 00-0003 | INCORPORATED: CHG. NO. | CHANGE: PARTIAL | THIS DWG SUPERSEDES: M-744-00027 | THIS DWG SUPERSEDED BY: | REV. NO. REV.

REVISION NOTES: ELECTRONICALLY CONVERTED PER AP 05-010

WOLF CREEK NUCLEAR OPERATING CORPORATION

ELECTRONIC APPROVAL

SNUPPS PROJECTS
FUNCTIONAL DIAGRAM
STEAM DUMP CONTROL

SCALE	DRAWING NUMBER	SHEET	REV
NONE	7250D64		10

34X44 E SIZE

Released by Document Services Release Date: 12/04/02

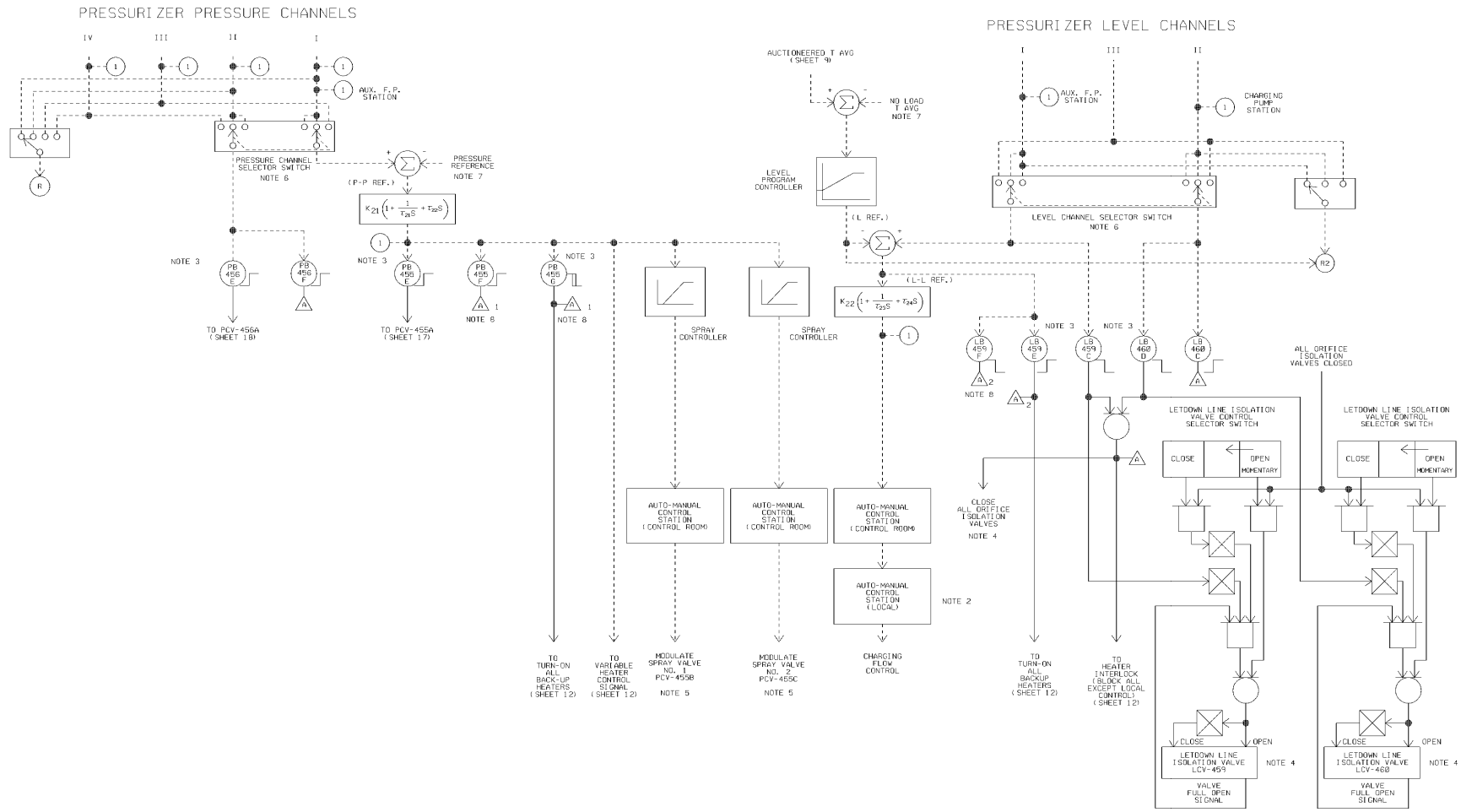

USAR FIG. 7.2-1-11

M-744-00028 W07

NOTES

1. ALL CIRCUITS ON THIS SHEET ARE NOT REDUNDANT.
2. LOCAL CONTROL OVERRIDES ALL OTHER SIGNALS. LOCAL OVERRIDE ACTUATES ALARM IN CONTROL ROOM.
3. PRESSURE BISTABLES NO. PB-455E, PB-455G, PB-456E AND LEVEL BISTABLES NO. LB-459C, LB-459E, & LB-460D ARE ENERGIZE TO ACTUATE.
4. OPEN/SHUT INDICATION IN CONTROL ROOM.
5. A LIGHT SHOULD BE PROVIDED IN THE CONTROL ROOM FOR EACH SPRAY VALVE TO INDICATE WHEN THE VALVE IS NOT FULLY CLOSED.
6. CENTER POSITION NORMALLY SELECTED.
7. ADJUSTABLE SETPOINT WITHIN CONTROLLER.
8. ALARM 1 AND ALARM 2 MUST HAVE REFLASH CAPABILITY.

ESSENTIAL DRAWING

⊗ REVISED / ○ ISSUED	INCORPORATED CHG. DOC.	CHANGE PKG. NO.	THIS DWG. SUPERSEDES M-744-00028 REV. W6 / THIS DWG. SUPERSEDED BY REV.
REVISION NOTES: ELECTRONICALLY CONVERTED PER AP 05-010			
REV. W	WOLF CREEK NUCLEAR OPERATING CORPORATION		ELECTRONIC APPROVAL

SNUPPS PROJECTS
FUNCTIONAL DIAGRAM
PRESSURIZER PRESSURE & LEVEL CONTROL

SCALE	DRAWING NUMBER	SHEET	REV
NONE	7250D64	11	

22X34 D SIZE

Released by Document Services Release Date: 12/04/02

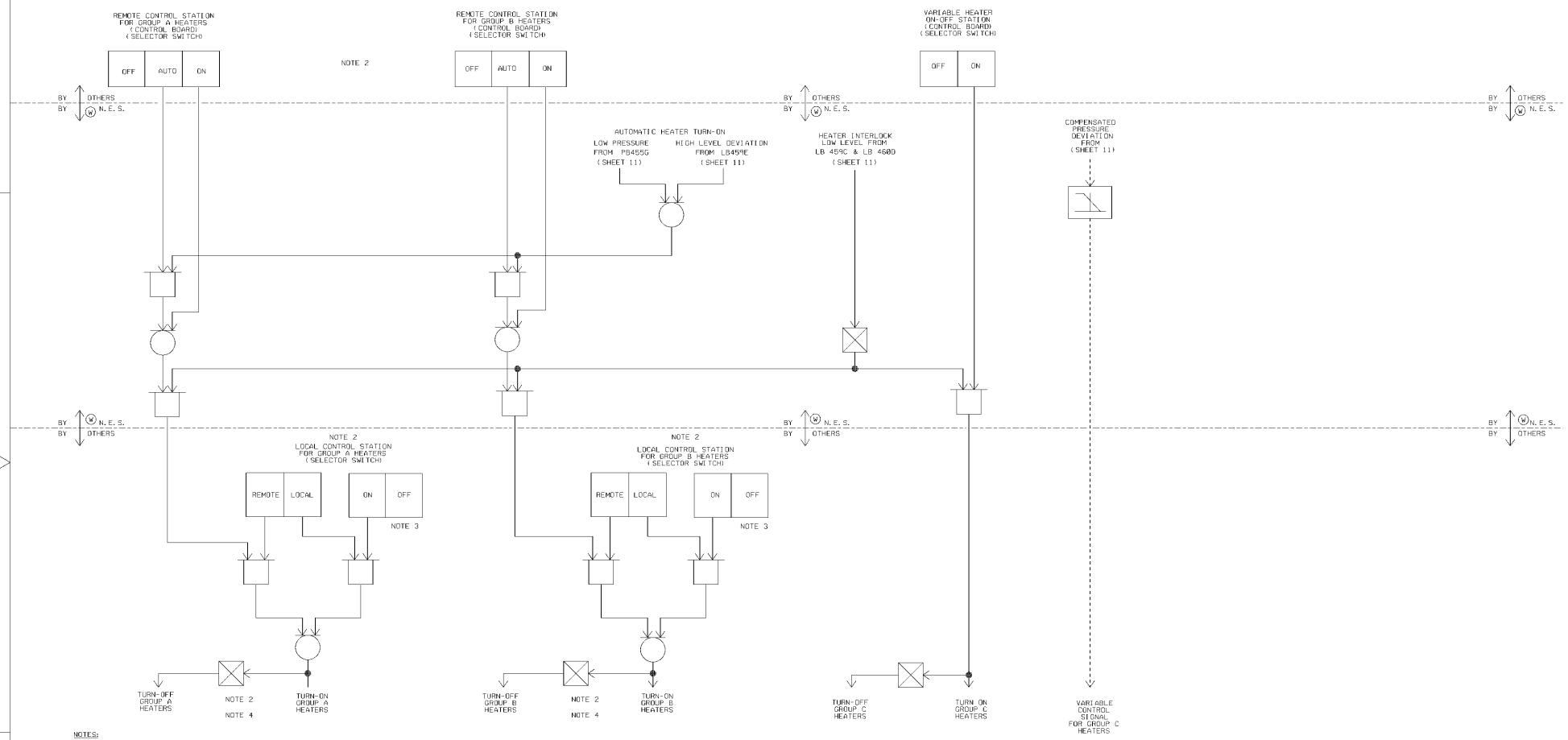

NOTES:

1. ALL CIRCUITS ON THIS SHEET ARE NOT REDUNDANT.
2. GROUP A AND GROUP B HEATERS MUST BE ON SEPARATE VITAL POWER SUPPLIES WITH THE LOCAL CONTROL SEPARATED SO THAT ANY SINGLE FAILURE DOES NOT DEFEAT BOTH.
3. PRECAUTIONS SHOULD BE TAKEN TO AVOID MANUAL HEATER OPERATION, WHICH WOULD CAUSE HEATER DAMAGE. IF THE WATER LEVEL UCOVERS THE HEATERS.
4. BACK-UP HEATER STATUS INDICATION IN CONTROL ROOM.

USAR FIG. 7.2-1-12

M-744-00029 W06

ESSENTIAL DRAWING

⊗ REVISED / ⊙ ISSUED	INCORPORATED CHG.DOC.	CHANGE PKG.NO.	THIS DWG. SUPERSEDES M-744-00029 REV.05 / THIS DWG. SUPERSEDED BY REV.

REVISION NOTES: ELECTRONICALLY CONVERTED PER AP 05-010

REV. 17

WOLF CREEK NUCLEAR OPERATING CORPORATION

ELECTRONIC APPROVAL

SNUPPS PROJECTS
FUNCTIONAL DIAGRAM
PRESSURIZER HEATER CONTROL

SCALE	DRAWING NUMBER	SHEET	REV
NONE	7250D64	12	

22X34 D SIZE

Released by Document Services Release Date: 12/04/02

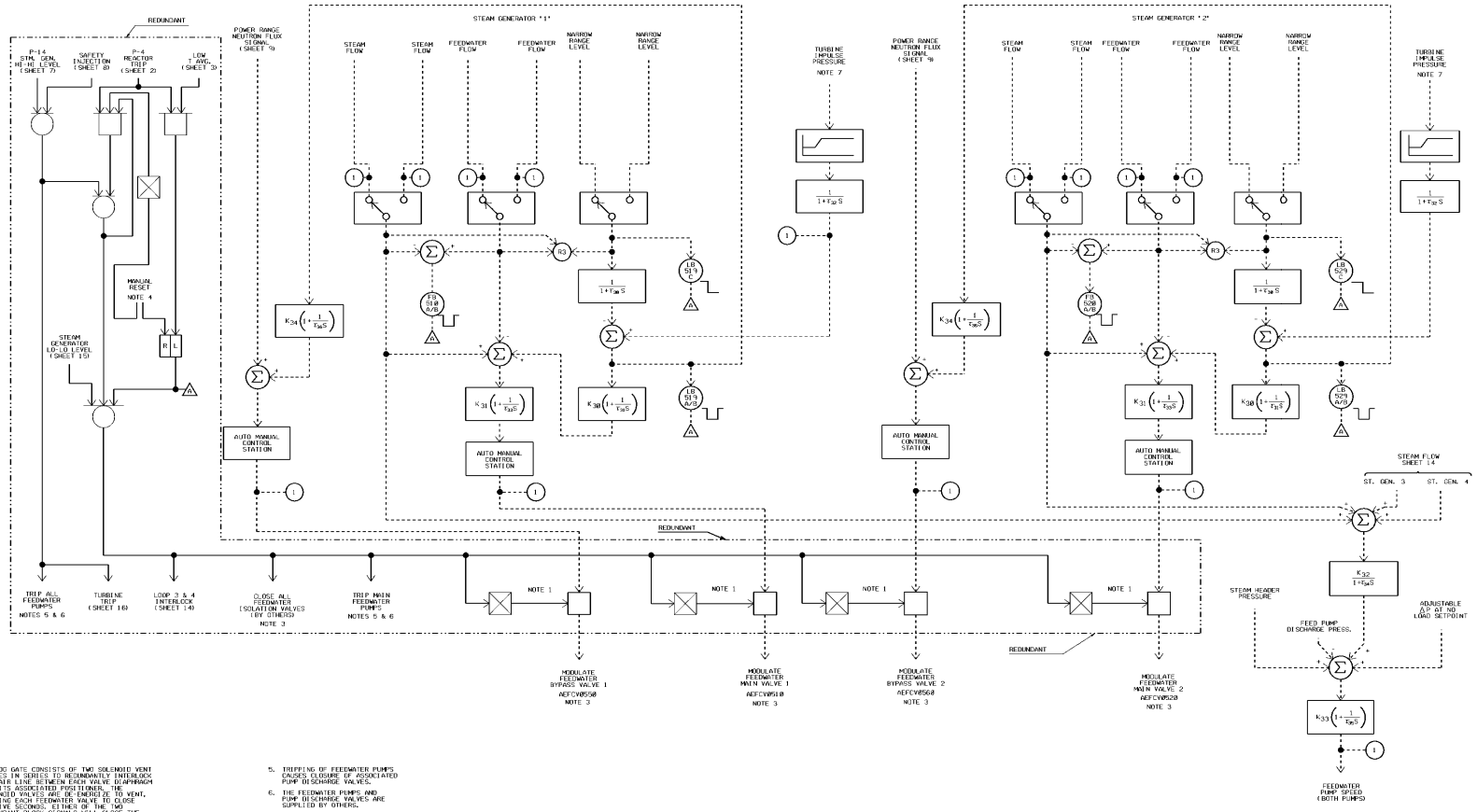

NOTES

1. ANALOG GATE CONSISTS OF TWO SOLENOID VENT VALVES IN SERIES TO REDUNDANTLY INTERLOCK THE AIR LINE BETWEEN EACH VALVE DIAPHRAGM AND ITS ASSOCIATED POSITIONER. THE SOLENOID VALVES ARE DE-ENERGIZE TO VENT, CAUSING EACH FEEDWATER VALVE TO CLOSE IN FIVE SECONDS. EITHER OF THE TWO REDUNDANT BLOCK SIGNALS WILL CLOSE THE ASSOCIATED VALVES INDEPENDENT OF THE OTHER SIGNALCB.

2. ALL CIRCUITS ON THIS SHEET ARE NOT REDUNDANT. EXCEPT WHERE INDICATED REDUNDANT.

3. OPEN/SHUT INDICATION FOR EACH FEEDWATER VALVE IN CONTROL ROOM.

4. THE REDUNDANT MANUAL RESET CONSISTS OF TWO MOMENTARY CONTROLS ON THE CONTROL BOARD, ONE FOR EACH TRAIN.

5. TRIPPING OF FEEDWATER PUMPS CAUSES CLOSURE OF ASSOCIATED PUMP DISCHARGE VALVES.

6. THE FEEDWATER PUMPS AND PUMP DISCHARGE VALVES ARE SUPPLIED BY OTHERS.

7. SWITCHING BETWEEN TWO PRESSURE SIGNALS IS PROVIDED ON THE CONTROL BOARD.

USAR FIG. 7.2-1-13

M-744-00030 W08

ESSENTIAL DRAWING

REVISED (INCORPORATED) CHANGE THIS DWG REPRESENTS M-744-00030 REV. W07
CHANGE (NO. DESC.) THIS DWG SUPERSEDED BY REV.

REVISION NOTES: ELECTRONICALLY CONVERTED PER AP 05-01.01

WOLF CREEK NUCLEAR OPERATING CORPORATION

ELECTRONIC APPROVAL

SNUPPS PROJECTS
FUNCTIONAL DIAGRAM
FEEDWATER CONTROL & ISOLATION

SCALE	DRAWING NUMBER	SHEET	REV
NONE	7250D64	13	

34044 E SDT

Released by Document Services Release Date: 12/04/02

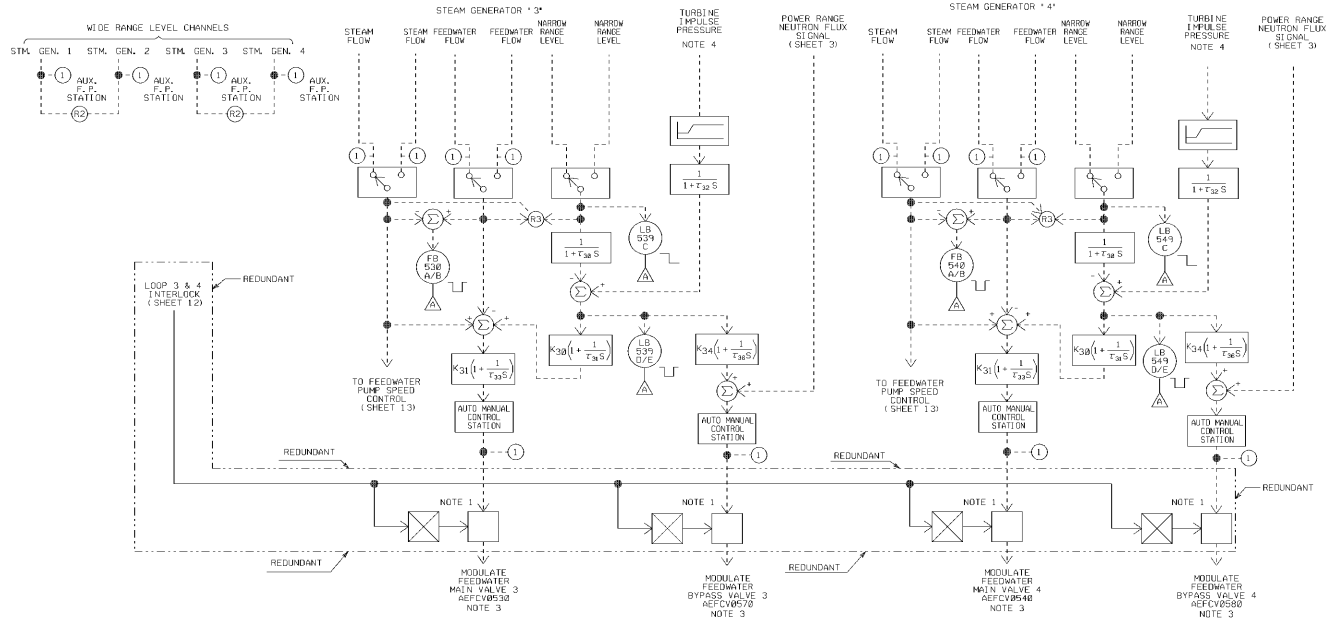

NOTES

1. ANALOG GATE CONSISTS OF TWO SOLENOID VENT VALVES IN SERIES TO REDUNDANTLY INTERLOCK THE AIR LINE BETWEEN EACH VALVE DIAPHRAGM AND ITS ASSOCIATED POSITIONER. THE SOLENOID VALVES ARE DE - ENERGIZED TO VENT, CAUSING EACH FEEDWATER VALVE TO CLOSE INFIVE SECONDS. EITHER OF THE TWO REDUNDANT BLOCK SIGNALS WILL CLOSE THE ASSOCIATED VALVES INDEPENDENT OF THE OTHER SIGNAL (5).
2. ALL CIRCUITS ON THIS SHEET ARE NOT REDUNDANT, EXCEPT WHERE INDICATED "REDUNDANT".
3. OPEN/SHUT INDICATION FOR EACH FEEDWATER VALVE IN CONTROL ROOM.
4. SWITCHING BETWEEN TWO PRESSURE SIGNALS IS PROVIDED ON THE CONTROL BOARD.

USAR FIG. 7.2-1-14

M-744-00031 W06

ESSENTIAL DRAWING

☒ REVISED ☐ ISSUED	INCORPORATED CHG.DOC.	CHANGE PKG.NO.	THIS DWG. SUPERSEDES / THIS DWG. SUPERSEDED BY — REV.
REVISION NOTES	ELECTRONICALLY CONVERTED PER AP 005-010		
REV. W	WOLF CREEK NUCLEAR OPERATING CORPORATION		ELECTRONIC APPROVAL

SNUPPS PROJECTS
FUNCTIONAL DIAGRAM
FEEDWATER CONTROL & ISOLATION

SCALE	DRAWING NUMBER	SHEET	REV
NONE	7250D64	16	

22X34 D SIZE

Released by Document Services Release Date: 12/04/02

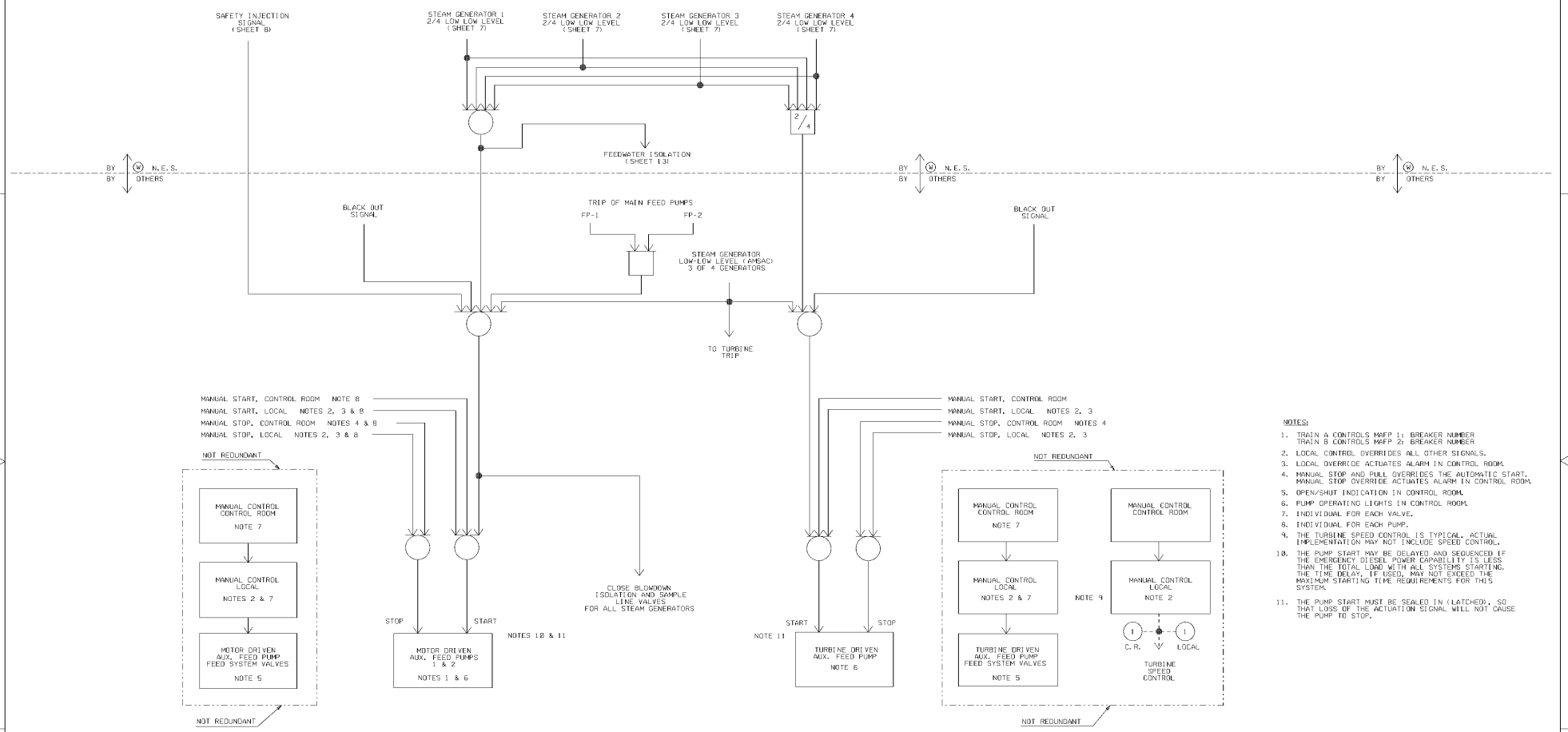

NOTES:

1. TRAIN A CONTROLS MAFP 1; BREAKER NUMBER
   TRAIN B CONTROLS MAFP 2; BREAKER NUMBER
2. LOCAL CONTROL OVERRIDES ALL OTHER SIGNALS.
3. LOCAL OVERRIDE ACTUATES ALARM IN CONTROL ROOM.
4. MANUAL STOP AND PULL OVERRIDES THE AUTOMATIC START. MANUAL STOP OVERRIDE ACTUATES ALARM IN CONTROL ROOM.
5. OPEN/SHUT INDICATION IN CONTROL ROOM.
6. PUMP OPERATING LIGHTS IN CONTROL ROOM.
7. INDIVIDUAL FOR EACH VALVE.
8. INDIVIDUAL FOR EACH PUMP.
9. THE TURBINE SPEED CONTROL IS TYPICAL. ACTUAL IMPLEMENTATION MAY NOT INCLUDE SPEED CONTROL.
10. THE PUMP START MAY BE DELAYED AND SEQUENCED IF THE EMERGENCY DIESEL POWER CAPABILITY IS LESS THAN THE TOTAL LOAD WITH ALL SYSTEMS STARTING. THE TIME DELAY, IF USED, MAY NOT EXCEED THE MAXIMUM STARTING TIME REQUIREMENTS FOR THIS SYSTEM.
11. THE PUMP START MUST BE SEALED IN (LATCHED), SO THAT LOSS OF THE ACTUATION SIGNAL WILL NOT CAUSE THE PUMP TO STOP.

USAR FIG. 7.2-1-15

M-744-00032 W07

ESSENTIAL DRAWING

⊗ REVISED ○ ISSUED	INCORPORATED CHG. DOC.	CHANGE PKG. NO.	THIS CHG. SUPERSEDES M-744-00032 REV. W06 THIS CHG. SUPERSEDED BY REV.
REVISION NOTES: ELECTRONICALLY CONVERTED PER AP 05-010			
INIT.	WOLF CREEK NUCLEAR OPERATING CORPORATION		ELECTRONIC APPROVAL

SNUPPS PROJECTS
FUNCTIONAL DIAGRAM
AUXILIARY FEEDWATER PUMPS STARTUP

SCALE	DRAWING NUMBER	SHEET	REV
NONE	7250D64	15	

22X34 D SIZE

Released by Document Services Release Date: 12/04/02

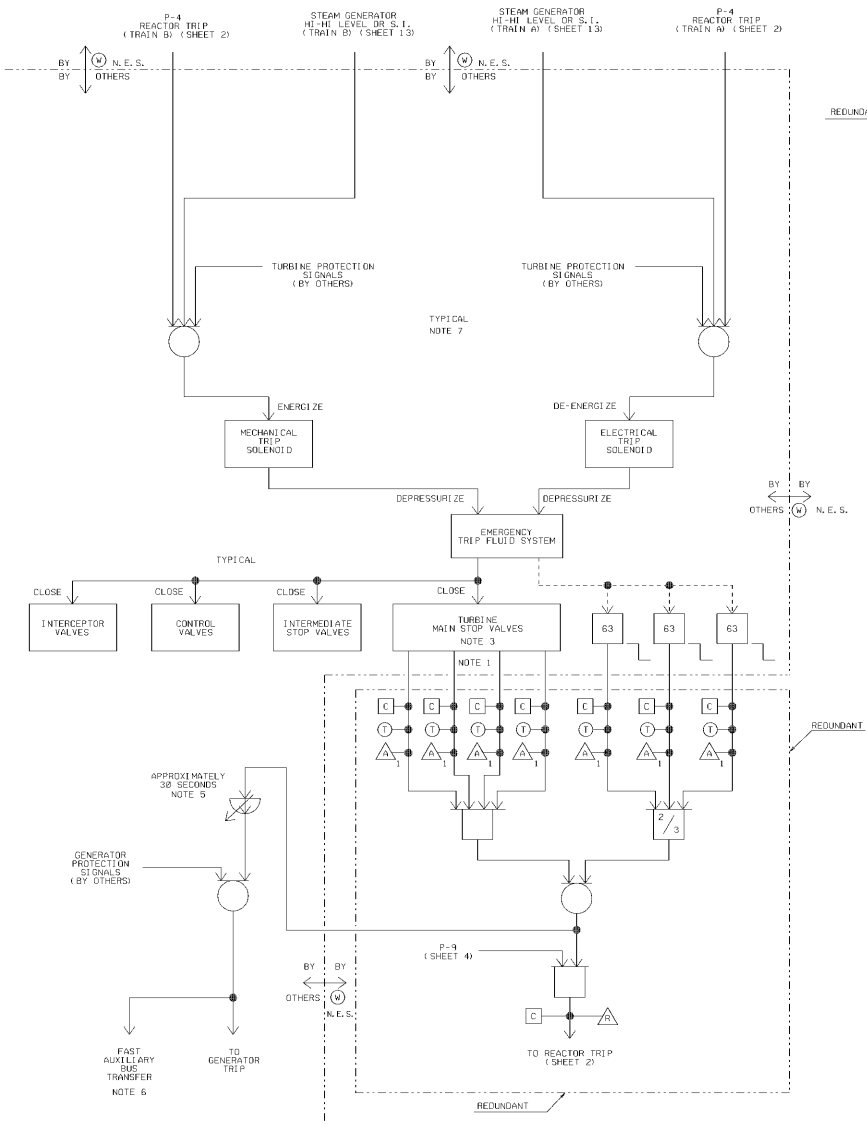

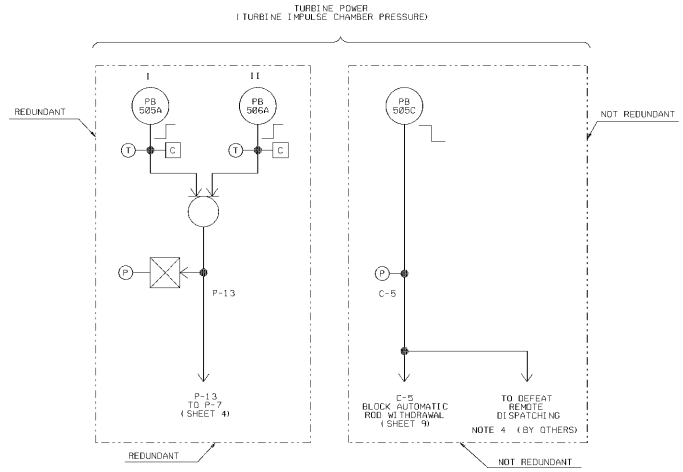

NOTES

1. THESE SIGNALS INDICATE THE CLOSING OF THE STOP VALVES. POSITION DETECTION IS ACCOMPLISHED BY TWO CONTACTS PER STOP VALVE, ONE FOR EACH TRAIN. THE LOGIC SHOWN IS FOR FOUR STOP VALVES.
2. EXCEPT WHERE INDICATED OTHERWISE, REDUNDANCY IS INDICATED IN REGARDS TO (W) NUCLEAR ENERGY SYSTEMS REQUIREMENTS ONLY.
3. OPEN/SHUT INDICATION IN CONTROL ROOM FOR EACH STOP VALVE.
4. THE REMOTE DISPATCHING IS TYPICAL. ACTUAL IMPLEMENTATION MAY NOT INCLUDE REMOTE DISPATCHING.
5. GENERATOR MOTORING PROTECTION SHOULD NOT DEFEAT THE THIRTY SECOND DELAY.
6. THE REACTOR COOLANT PUMP BUS TRANSFER SHOULD BE COMPLETED WITHIN SIX CYCLES IN ORDER TO INSURE COMPATIBILITY WITH THE UNDERFREQUENCY TRIP OF THE REACTOR COOLANT PUMP CIRCUIT BREAKERS. THE TRANSFER TIME LIMIT MAY BE EXTENDED ANOTHER 4 CYCLES TO A TOTAL OF NOT GREATER THAN 10 CYCLES, IF THE SYSTEM DYNAMICS ARE SUCH THAT A RCP TRIP DOES NOT OCCUR. THE 10 CYCLE LIMIT IS FOR PUMP MOTOR PROTECTION.
7. THE TURBINE-GENERATOR PROTECTION LOGIC IS ONLY TYPICAL OF THE ACTUAL HARDWARE DESIGN.

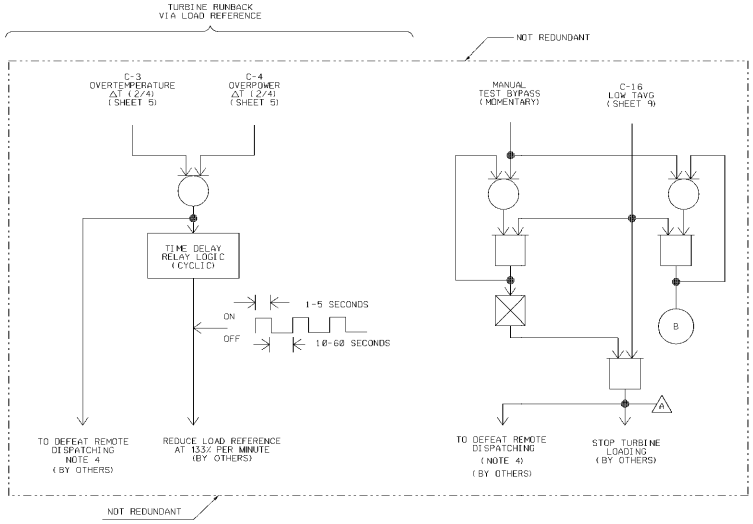

USAR FIG. 7.2-1-16

M-744-00033 W07

ESSENTIAL DRAWING

⊕ REVISED / ○ ISSUED	INCORPORATED DCL/DC	CHANGE NOTICE	THIS DWG. SUPERSEDES / THIS DWG. SUPERSEDED BY	M-744-00033 REV. W06 / REV.
REVISION NOTES: ELECTRONICALLY CONVERTED PER AP 05-010				
REV. 2 W	WOLF CREEK NUCLEAR OPERATING CORPORATION		ELECTRONIC APPROVAL	

SNUPPS PROJECT
FUNCTIONAL DIAGRAM TURBINE
TRIP, RUNBACKS, AND OTHER SIGNALS

SCALE	DRAWING NUMBER	SHEET	REV
NONE	7250D64	16	

22X34 D SIZE

Released by Document Services Release Date: 12/04/02

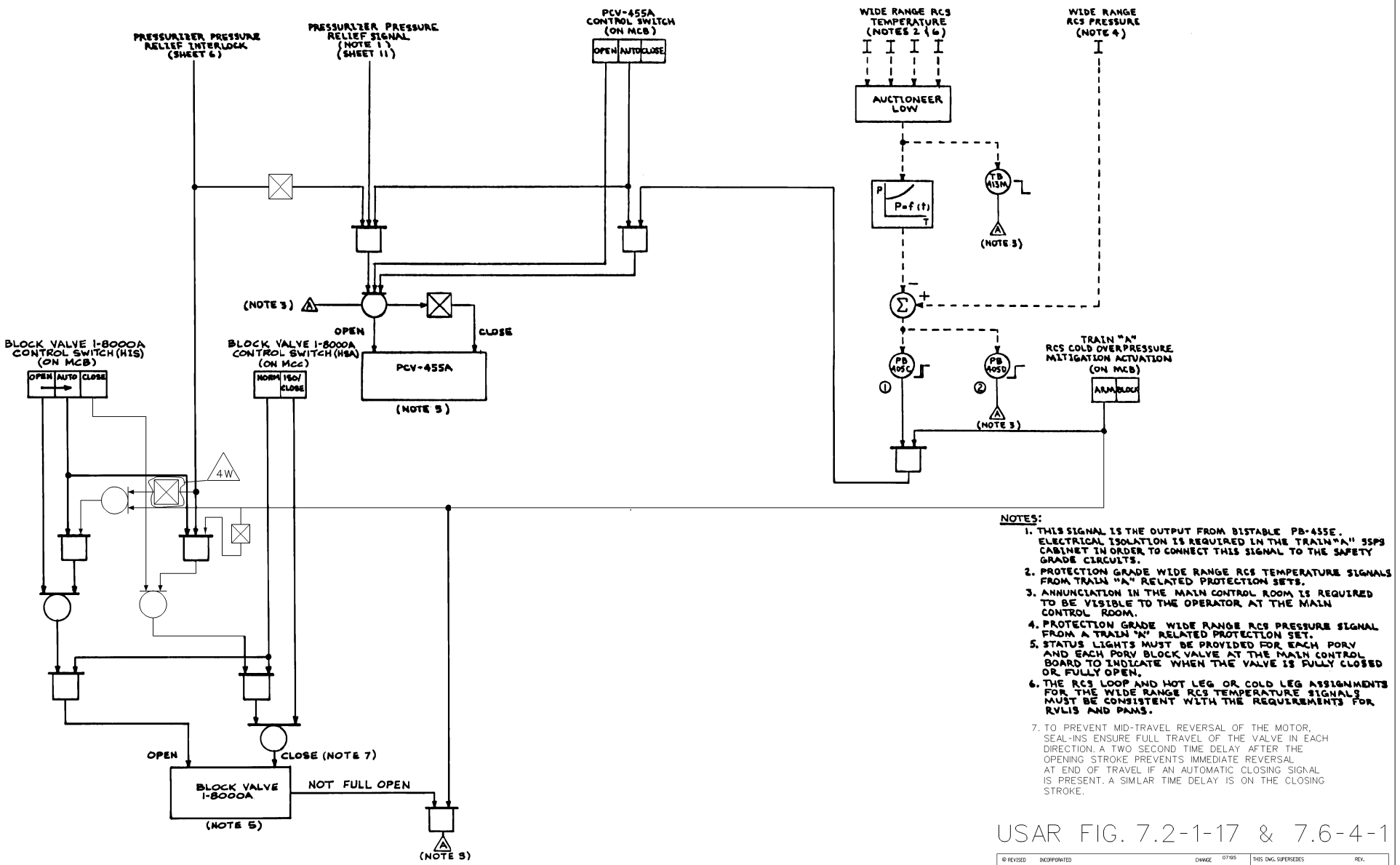

NOTES:

1. THIS SIGNAL IS THE OUTPUT FROM BISTABLE PB-455E. ELECTRICAL ISOLATION IS REQUIRED IN THE TRAIN "A" SSPS CABINET IN ORDER TO CONNECT THIS SIGNAL TO THE SAFETY GRADE CIRCUITS.
2. PROTECTION GRADE WIDE RANGE RCS TEMPERATURE SIGNALS FROM TRAIN "A" RELATED PROTECTION SETS.
3. ANNUNCIATION IN THE MAIN CONTROL ROOM IS REQUIRED TO BE VISIBLE TO THE OPERATOR AT THE MAIN CONTROL ROOM.
4. PROTECTION GRADE WIDE RANGE RCS PRESSURE SIGNAL FROM A TRAIN "A" RELATED PROTECTION SET.
5. STATUS LIGHTS MUST BE PROVIDED FOR EACH PORV AND EACH PORV BLOCK VALVE AT THE MAIN CONTROL BOARD TO INDICATE WHEN THE VALVE IS FULLY CLOSED OR FULLY OPEN.
6. THE RCS LOOP AND HOT LEG OR COLD LEG ASSIGNMENTS FOR THE WIDE RANGE RCS TEMPERATURE SIGNALS MUST BE CONSISTENT WITH THE REQUIREMENTS FOR RVLIS AND PAMS.
7. TO PREVENT MID-TRAVEL REVERSAL OF THE MOTOR, SEAL-INS ENSURE FULL TRAVEL OF THE VALVE IN EACH DIRECTION. A TWO SECOND TIME DELAY AFTER THE OPENING STROKE PREVENTS IMMEDIATE REVERSAL AT END OF TRAVEL IF AN AUTOMATIC CLOSING SIGNAL IS PRESENT. A SIMLAR TIME DELAY IS ON THE CLOSING STROKE.

USAR FIG. 7.2-1-17 & 7.6-4-1

⊗ REVISED ○ ISSUED	INCORPORATED CHG. DOC.	CHANGE PKG. NO. 07195	THIS DWG. SUPERSEDES REV. THIS DWG. SUPERSEDED BY REV.
REVISION NOTES:			
REV 4W	WOLF CREEK NUCLEAR OPERATING CORPORATION		ELECTRONIC APPROVAL

M-744-00039-W06

DRN G. LASSER	10-31-81	Westinghouse Electric Corporation — NUCLEAR ENERGY SYSTEMS PITTSBURGH PA U.S.A.	
CHKR		"THE SNUPPS PROJECT" FUNCTIONAL DIAGRAM PRESSURIZER PRESSURE RELIEF SYSTEM (TRAIN A)	
DES ENGR	11/4/81		
DTLS ENGR			
ENGR	11/5/81		
ENGR		SCALE	7250064
ENGR		DIMENSIONS IN INCHES	SHEET 17
DTLS ENGR A.C. Dean	4-9-81	DO NOT SCALE	SUB 1

Released By Document Services Release Date: 10/22/98

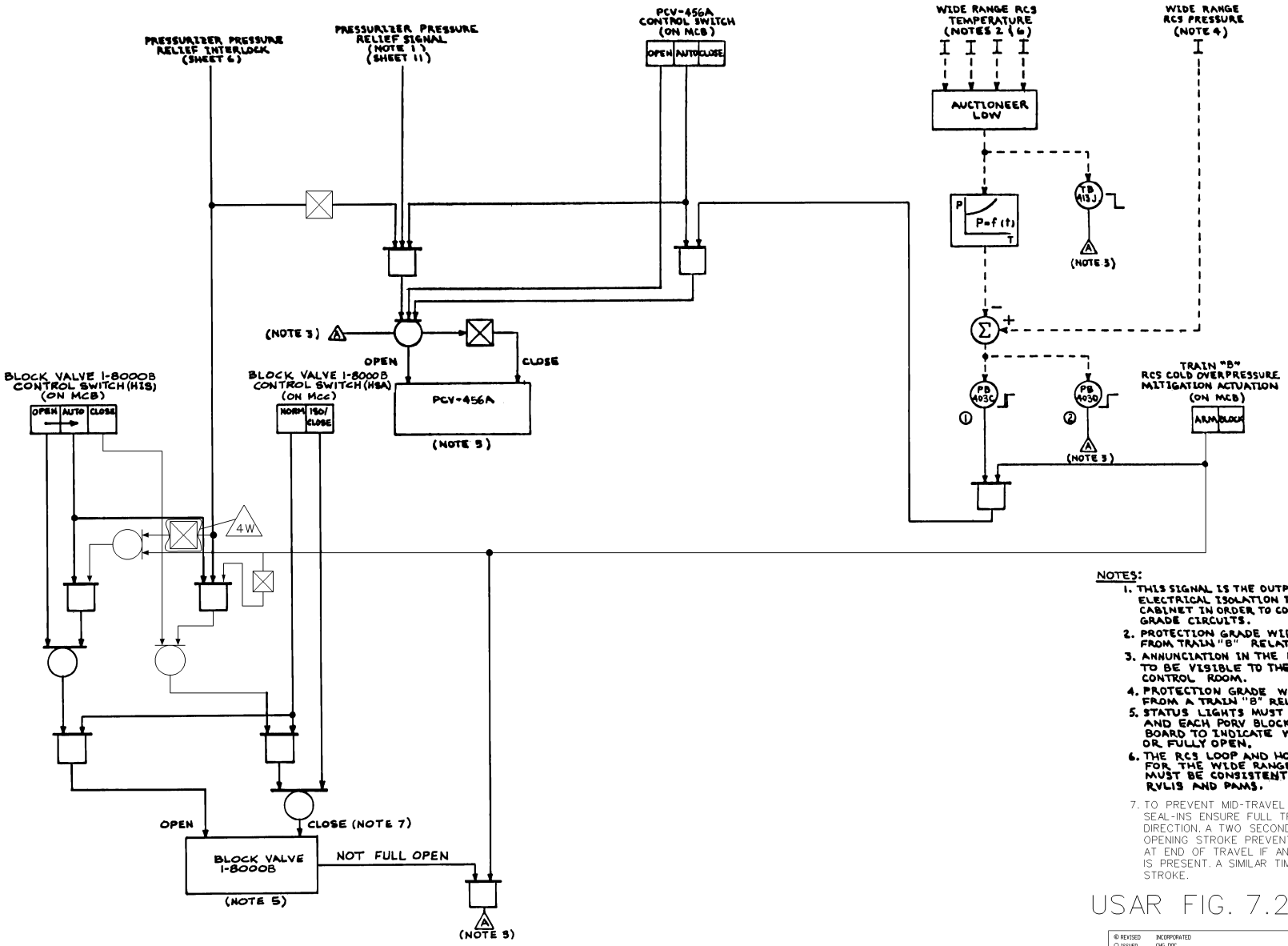

NOTES:

1. THIS SIGNAL IS THE OUTPUT FROM BISTABLE PB-456E. ELECTRICAL ISOLATION IS REQUIRED IN THE TRAIN "B" SSPS CABINET IN ORDER TO CONNECT THIS SIGNAL TO THE SAFETY GRADE CIRCUITS.
2. PROTECTION GRADE WIDE RANGE RCS TEMPERATURE SIGNALS FROM TRAIN "B" RELATED PROTECTION SETS.
3. ANNUNCIATION IN THE MAIN CONTROL ROOM IS REQUIRED TO BE VISIBLE TO THE OPERATOR AT THE MAIN CONTROL ROOM.
4. PROTECTION GRADE WIDE RANGE RCS PRESSURE SIGNAL FROM A TRAIN "B" RELATED PROTECTION SET.
5. STATUS LIGHTS MUST BE PROVIDED FOR EACH PORV AND EACH PORV BLOCK VALVE AT THE MAIN CONTROL BOARD TO INDICATE WHEN THE VALVE IS FULLY CLOSED OR FULLY OPEN.
6. THE RCS LOOP AND HOT LEG OR COLD LEG ASSIGNMENTS FOR THE WIDE RANGE RCS TEMPERATURE SIGNALS MUST BE CONSISTENT WITH THE REQUIREMENTS FOR RVLIS AND PAMS.
7. TO PREVENT MID-TRAVEL REVERSAL OF THE MOTOR, SEAL-INS ENSURE FULL TRAVEL OF THE VALVE IN EACH DIRECTION. A TWO SECOND TIME DELAY AFTER THE OPENING STROKE PREVENTS IMMEDIATE REVERSAL AT END OF TRAVEL IF AN AUTOMATIC CLOSING SIGNAL IS PRESENT. A SIMILAR TIME DELAY IS ON THE CLOSING STROKE.

USAR FIG. 7.2-1 -18 & 7.6-4-2

⊕ REVISED INCORPORATED ○ ISSUED CHG. DOC.	CHANGE 07795 PKG. NO.	THIS DWG. SUPERSEDES: THIS DWG. SUPERSEDES BY	REV. REV.
REVISION NOTES:			
REV A 4W	WOLF CREEK NUCLEAR OPERATING CORPORATION		ELECTRONIC APPROVAL

M-744-00040-W06

DRN G. LASSER	12-5-81	Westinghouse Electric Corporation NUCLEAR ENERGY SYSTEMS PITTSBURGH PA U.S.A.	
CHKR			
DES ENGR	11/5/81	TITLE SNUPPS PROJECTS FUNCTIONAL DIAGRAM PRESSURIZER PRESSURE RELIEF SYSTEM (TRAIN B)	
MFG ENG			
CTLS ENG			
APP	11/5/81		
APP		SCALE	7250D64
APP		DIMENSIONS IN INCHES	SHEET 18
MFG SUPV	12-9-81	DO NOT SCALE	SUB 1

Released By Document Services Release Date: 10/22/98

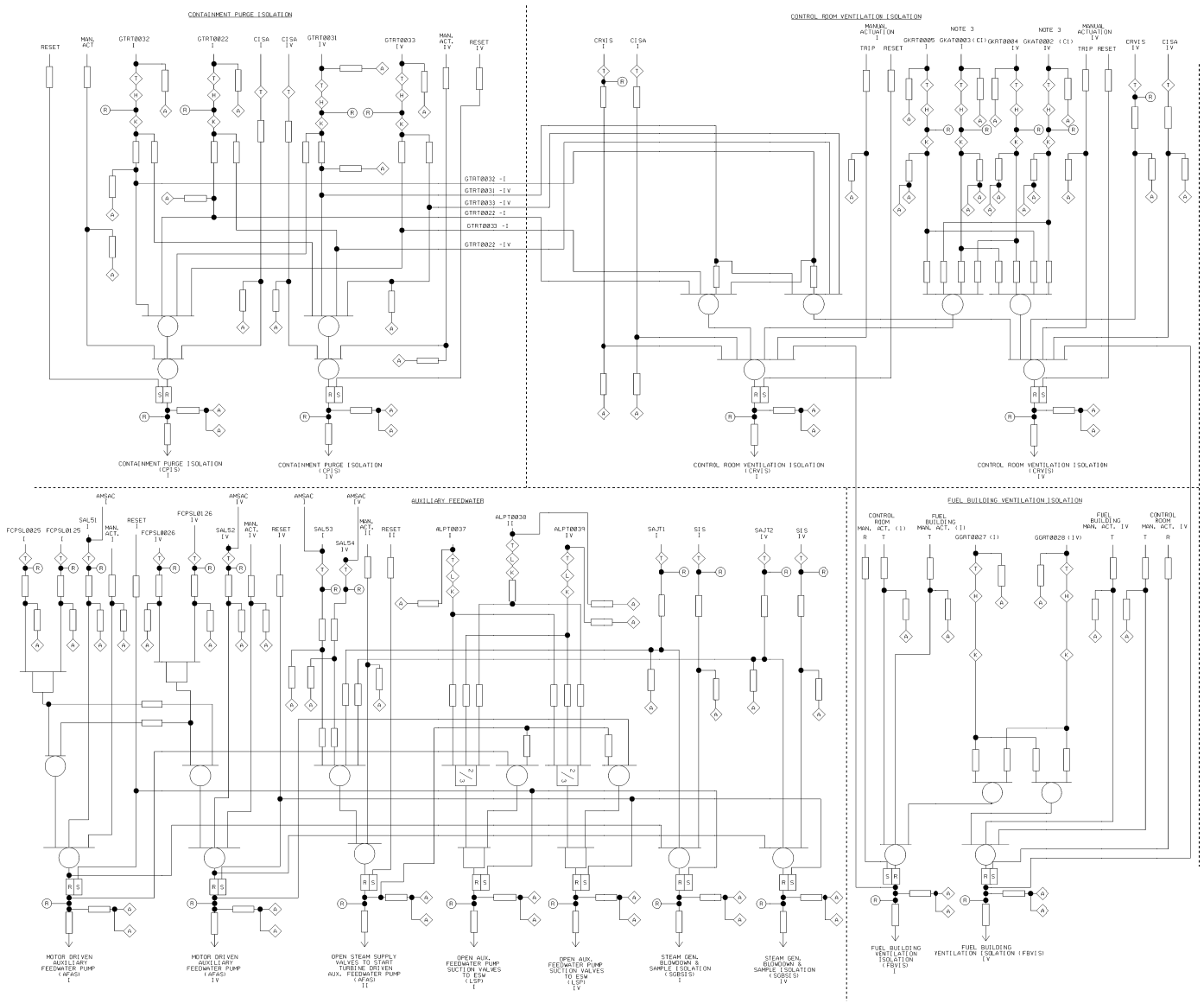

NOTES

1. KEY TO SYMBOLS:

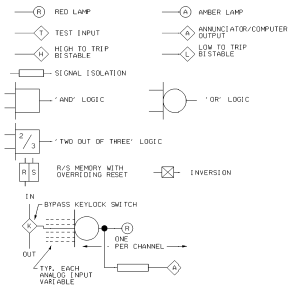

2. AMSAC INPUT SIGNALS ARE PROVIDED BY OWNER.

3. GKAT-2/3 CHLORINE TRANSMITTERS ARE SPARED IN PLACE.

USAR FIG. 7.3-1-02

ESSENTIAL DRAWING

REVISED	NC: PR 2005-275	CHKG.	THIS DWG SUPERSEDES: REV.
ISSUED	CHKG.	PRJ.	VENDOR MANUAL: J-104-00347 PAGE(S) 0310
	DOC.	NO.	SUPPLIER DWG NO: KP1909W

REVISION NOTES

WOLF CREEK NUCLEAR OPERATING CORPORATION

DRAWING NUMBER: J-104-00390 REVISION: W08 SHEET NO.

ELECTRONIC APPROVAL

LOGIC BLOCK DIAGRAM ESFAS

SCALE: NONE DRAWING NUMBER: KP1909W SHEET: 1 REV:

34144 E SIZE

Released by Document Services Release Date: 11/04/05

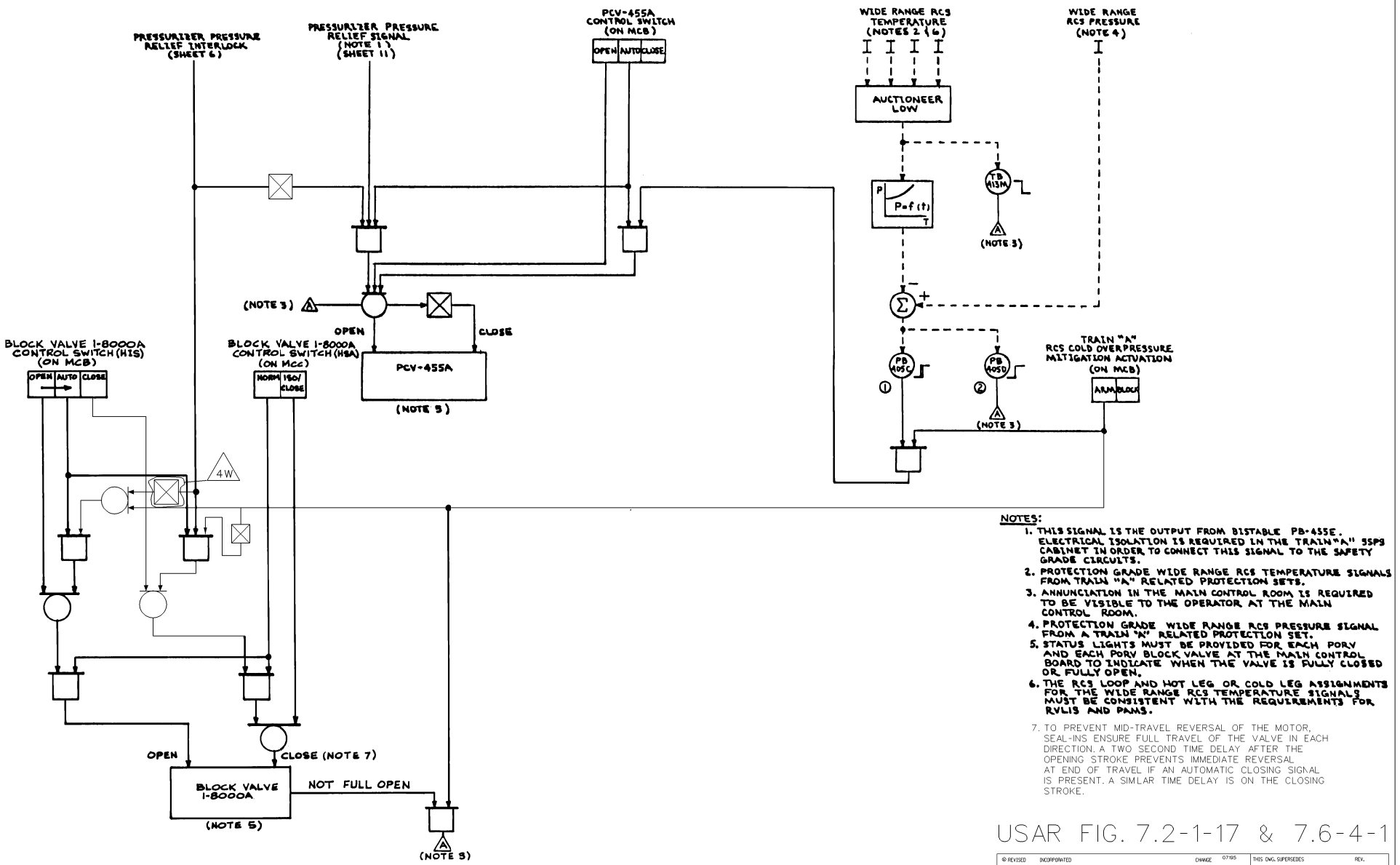

NOTES:

1. THIS SIGNAL IS THE OUTPUT FROM BISTABLE PB-455E. ELECTRICAL ISOLATION IS REQUIRED IN THE TRAIN "A" SSPS CABINET IN ORDER TO CONNECT THIS SIGNAL TO THE SAFETY GRADE CIRCUITS.
2. PROTECTION GRADE WIDE RANGE RCS TEMPERATURE SIGNALS FROM TRAIN "A" RELATED PROTECTION SETS.
3. ANNUNCIATION IN THE MAIN CONTROL ROOM IS REQUIRED TO BE VISIBLE TO THE OPERATOR AT THE MAIN CONTROL ROOM.
4. PROTECTION GRADE WIDE RANGE RCS PRESSURE SIGNAL FROM A TRAIN "A" RELATED PROTECTION SET.
5. STATUS LIGHTS MUST BE PROVIDED FOR EACH PORV AND EACH PORV BLOCK VALVE AT THE MAIN CONTROL BOARD TO INDICATE WHEN THE VALVE IS FULLY CLOSED OR FULLY OPEN.
6. THE RCS LOOP AND HOT LEG OR COLD LEG ASSIGNMENTS FOR THE WIDE RANGE RCS TEMPERATURE SIGNALS MUST BE CONSISTENT WITH THE REQUIREMENTS FOR RVLIS AND PAMS.
7. TO PREVENT MID-TRAVEL REVERSAL OF THE MOTOR, SEAL-INS ENSURE FULL TRAVEL OF THE VALVE IN EACH DIRECTION. A TWO SECOND TIME DELAY AFTER THE OPENING STROKE PREVENTS IMMEDIATE REVERSAL AT END OF TRAVEL IF AN AUTOMATIC CLOSING SIGNAL IS PRESENT. A SIMLAR TIME DELAY IS ON THE CLOSING STROKE.

USAR FIG. 7.2-1-17 & 7.6-4-1

⊗ REVISED ○ ISSUED	INCORPORATED CHG. DOC.	CHANGE PKG. NO. 07195	THIS DWG. SUPERSEDES REV. THIS DWG. SUPERSEDED BY REV.
REVISION NOTES:			
REV 4W	WOLF CREEK NUCLEAR OPERATING CORPORATION		ELECTRONIC APPROVAL

M-744-00039-W06

DRN G. LASSER	10-31-81	Westinghouse Electric Corporation — NUCLEAR ENERGY SYSTEMS PITTSBURGH PA U.S.A.	
CHKR		"THE SNUPPS PROJECT" FUNCTIONAL DIAGRAM PRESSURIZER PRESSURE RELIEF SYSTEM (TRAIN A)	
DES ENGR	11/4/81		
DTLS ENGR			
ENGR	11/5/81		
ENGR		SCALE	7250064
ENGR		DIMENSIONS IN INCHES	SHEET 17
DTLS ENGR A.C. Dean	4-9-81	DO NOT SCALE	SUB 1

Released By Document Services Release Date: 10/22/98

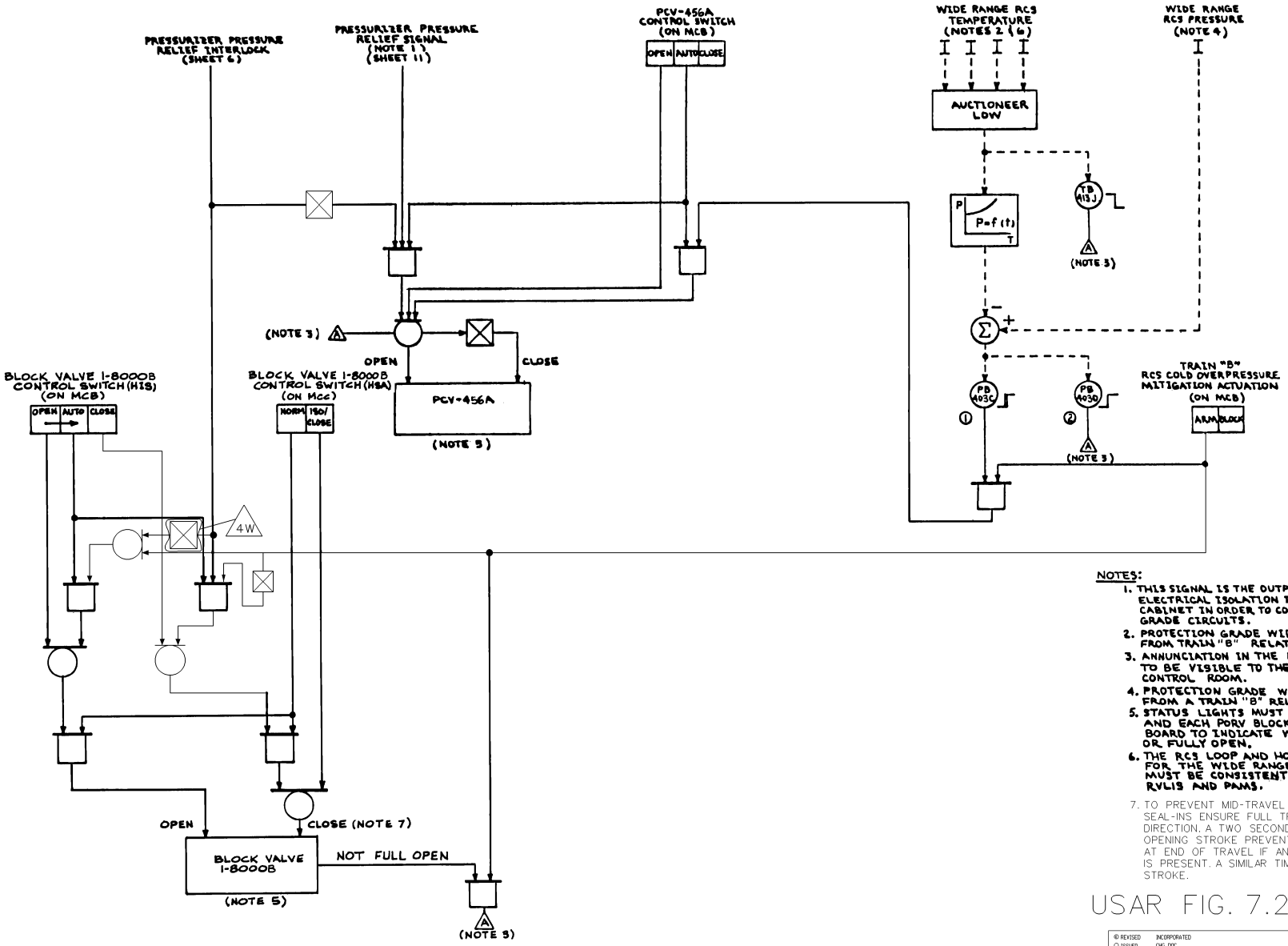

NOTES:

1. THIS SIGNAL IS THE OUTPUT FROM BISTABLE PB-456E. ELECTRICAL ISOLATION IS REQUIRED IN THE TRAIN "B" SSPS CABINET IN ORDER TO CONNECT THIS SIGNAL TO THE SAFETY GRADE CIRCUITS.
2. PROTECTION GRADE WIDE RANGE RCS TEMPERATURE SIGNALS FROM TRAIN "B" RELATED PROTECTION SETS.
3. ANNUNCIATION IN THE MAIN CONTROL ROOM IS REQUIRED TO BE VISIBLE TO THE OPERATOR AT THE MAIN CONTROL ROOM.
4. PROTECTION GRADE WIDE RANGE RCS PRESSURE SIGNAL FROM A TRAIN "B" RELATED PROTECTION SET.
5. STATUS LIGHTS MUST BE PROVIDED FOR EACH PORV AND EACH PORV BLOCK VALVE AT THE MAIN CONTROL BOARD TO INDICATE WHEN THE VALVE IS FULLY CLOSED OR FULLY OPEN.
6. THE RCS LOOP AND HOT LEG OR COLD LEG ASSIGNMENTS FOR THE WIDE RANGE RCS TEMPERATURE SIGNALS MUST BE CONSISTENT WITH THE REQUIREMENTS FOR RVLIS AND PAMS.
7. TO PREVENT MID-TRAVEL REVERSAL OF THE MOTOR, SEAL-INS ENSURE FULL TRAVEL OF THE VALVE IN EACH DIRECTION. A TWO SECOND TIME DELAY AFTER THE OPENING STROKE PREVENTS IMMEDIATE REVERSAL AT END OF TRAVEL IF AN AUTOMATIC CLOSING SIGNAL IS PRESENT. A SIMILAR TIME DELAY IS ON THE CLOSING STROKE.

USAR FIG. 7.2-1 -18 & 7.6-4-2

⊕ REVISED INCORPORATED ○ ISSUED CHG. DOC.	CHANGE 07795 PKG. NO.	THIS DWG. SUPERSEDES: THIS DWG. SUPERSEDES BY	REV. REV.
REVISION NOTES:			
REV A 4W	WOLF CREEK NUCLEAR OPERATING CORPORATION		ELECTRONIC APPROVAL

M-744-00040-W06

DRN G. LASSER	12-5-81	Westinghouse Electric Corporation NUCLEAR ENERGY SYSTEMS PITTSBURGH PA U.S.A.	
CHKR			
DES ENGR	11/5/81	TITLE SNUPPS PROJECTS FUNCTIONAL DIAGRAM PRESSURIZER PRESSURE RELIEF SYSTEM (TRAIN B)	
MFG ENG			
CTLS ENG			
APP	11/5/81		
APP		SCALE	7250D64
APP		DIMENSIONS IN INCHES	SHEET 18
MFG SUPV	12-9-81	DO NOT SCALE	SUB 1

Released By Document Services Release Date: 10/22/98