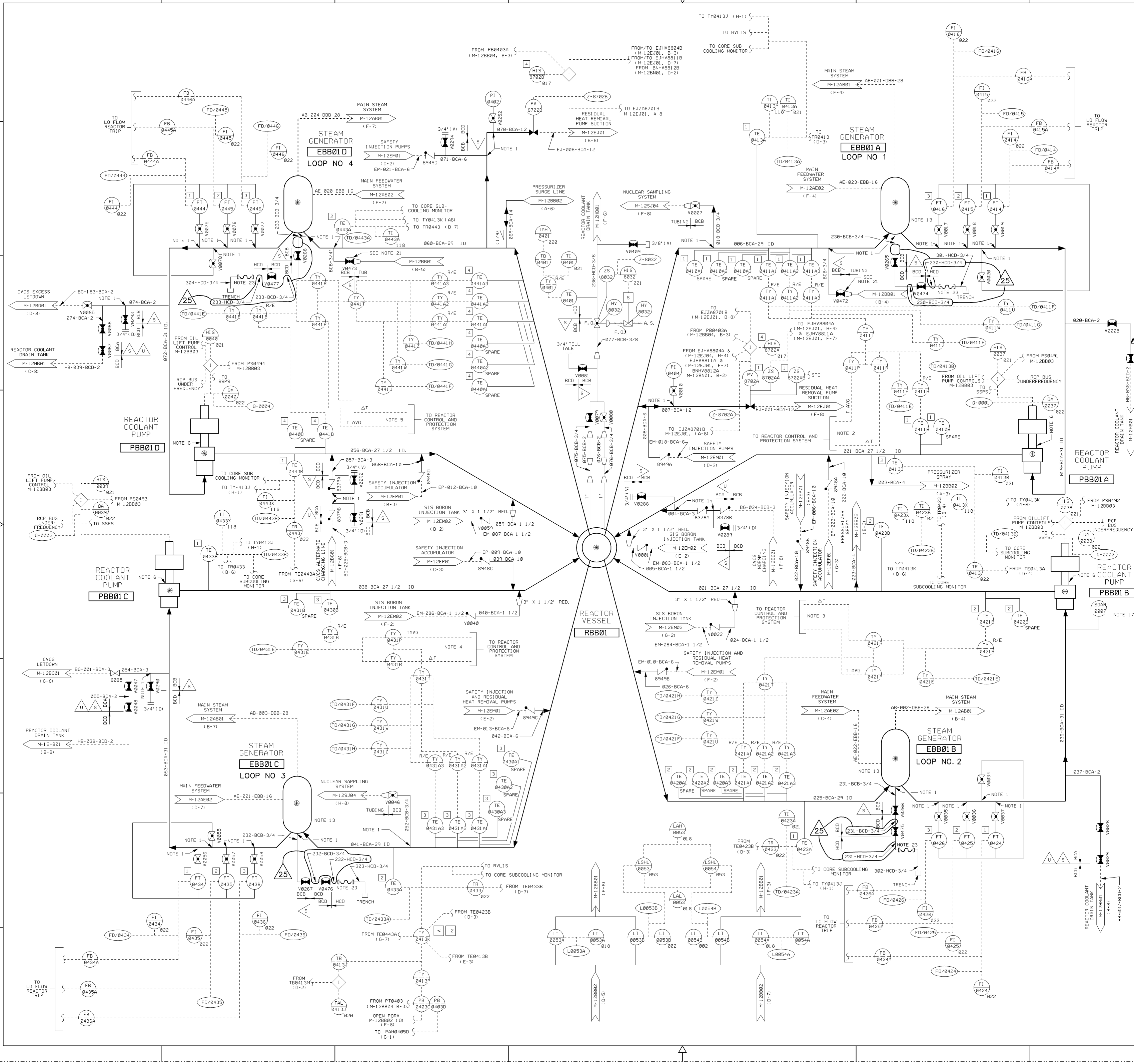

NOTES:

1. DRILLED RESTRICTION 3/8" IN DIAMETER. POINT AT WHICH QUALITY GROUP CLASSIFICATION IS CHANGED FROM "A" TO "B"
2. SEE WESTINGHOUSE DRAWING M-761-00072.
3. SEE WESTINGHOUSE DRAWING M-761-00073.
4. SEE WESTINGHOUSE DRAWING M-761-00074.
5. SEE WESTINGHOUSE DRAWING M-761-00075.
6. DETAILS OF REACTOR COOLANT PUMP MOTOR COOLING, SEAL WATER INJECTION, AND INSTRUMENTATION AND CONTROLS ARE SHOWN ON M-12BB03.
7. RTD STRAPPED TO LINE.
8. TYGON HOSE TO BE INSTALLED AT THESE CONNECTIONS TO VENT PRESSURIZER DURING DRAINING AND FILLING.
9. DELETED
10. REFERENCE WESTINGHOUSE DRAWINGS M-738-00002, M-738-00003, AND M-738-00004.
11. ALL WELDS IN ASME SECTION III CLASS 1 COMPONENTS AND ASME SECTION III CLASS 1 PIPING OF NORMINAL PIPE SIZE GREATER THAN 1" MAY BE SUBJECT TO VOLUMETRIC EXAMINATION DURING PRESERVICE INSPECTION (PSI) AND/OR INSERVICE INSPECTION (ISI) PROGRAMS THE SPECIFIC WELDS AND THEIR INSPECTION REQUIREMENTS ARE DELINEATED IN THE APPLICABLE PSI/ISI WORK PLANS PROVIDED UNDER SPECIFICATION 10466-M-189 BOUNDARIES OF THESE PIPING SYSTEMS ARE IDENTIFIED WITH A U SYMBOL FOR CLARITY
12. FOR P&ID LEGEND AND SYMBOLS SEE DRAWINGS 10466-M-120101 THRU 10466-M-120104.
13. DETAILS OF STEAM GENERATOR SECONDARY SIDE PIPING AND CONTROLS ARE PROVIDED ON M-12AB01, M-12AE02, AND M-12BM01
14. A DIRECT READING DIGITAL PRESSURE INDICATOR IS CONNECTED TO THIS LINE AT THE NUCLEAR SAMPLE STATION, DOWN STREAM OF THE SAMPLE COOLER, FOR PURPOSES OF CALIBRATING THE PRESSURIZER PRESSURE INSTRUMENT CHANNELS.
15. DELETED
16. PRESSURIZER SAFETY & RELIEF VALVE DISCHARGE LINE SHOULD BE ANALYZED SO AS TO ASSURE THE INTEGRITY OF THE PRESSURIZER RELIEF TANK DURING & FOLLOWING AN SSE.
17. SGAR-0007 PEAK RECORDING ACCELEROMETER, TO BE MOUNTED ON SURFACE OF HORIZONTAL PIPE SECTION
18. DELETED
19. ASTS(AUXILIARY SHUTDOWN TRANSFER SIGNAL) IS INITIATED AT RP118 B BY RPHIS-0003 WHICH TRANSFERS CONTROL TO THE AUXILIARY SHUTDOWN PANEL WHILE ISOLATING THE MAIN CONTROL BOARD CONTROLS AND INDICATION
20. THE PRESSURIZER RELIEF TANK IS A SEISMICALLY QUALIFIED ASME SECTION VIII COMPONENT
21. ISOLATE ALL RCS LEVEL INSTRUMENTATION USING REFERENCED VALVES DURING MODES 1 THRU 4.
22. DELETED
23. DURING NORMAL PLANT OPERATION, QUICK DISCONNECT "DUST" CAPS WILL BE INSTALLED ON THE DRAIN ENDS WITH QUICK DISCONNECTS FOR STEAM GENERATOR BOWL DRAINING OPERATIONS, THE CAPS WILL BE REMOVED, AND A SECTION OF FLEXIBLE HOSE WITH QUICK DISCONNECT ENDS WILL BE INSTALLED TO ALLOW DRAINING TO THE CONTAINMENT SUMP TRENCH.
24. ACCELEROMETERS ARE INSTALLED AT EACH REACTOR COOLANT PUMP DISCHARGE (8).
25. LANYARD POTENTIOMETERS ARE ATTACHED AT THE FOLLOWING LOCATIONS: D LOOP STEAM GENERATOR COOLANT OUTLET (1) ALL LOOP CROSSOVER LEGS AT ELBOW BELOW THE REACTOR COOLANT PUMP (4) REACTOR PRESSURE VESSEL HEAD(5)
26. ACCELEROMETERS ARE REMOVED OR ABANDONED AT THE "D" HOT LEG REACTOR VESSEL NOZZLE.

REFERENCE:

ANY REVISION TO THIS DRAWING MAY REQUIRE A REVISION TO THE HIGH PRESSURE COOLANT INJECTION SYS. TEST LINE P& I.D. M-12EM03.

USAR FIG. 5.1-1-01

ESSENTIAL DRAWING

⊗ REVISED ○ ISSUED	INCORPORATED CHG. DOC. — CHANGE PKG. NO. 011986
THIS DWG. SUPERSEDED BY — REV.	THIS DWG. SUPERSEDES — REV.
REVISION NOTES:	D-4 ERROR CORRECTED. DELETED REDUCER ON "A" & "D" STM. GEN. DRAIN LINE. REF. PMR 04488 & WIP-M-12BB01-07-B, R/00
WOLF CREEK NUCLEAR OPERATING CORPORATION	ELECTRONIC APPROVAL

PIPING & INSTRUMENTATION DIAGRAM REACTOR COOLANT SYSTEM

SCALE	DRAWING NUMBER	SHEET	REV
NONE	M-12BB01		25

34X44 E SIZE

Released by Document Services Release Date: 01/27/06

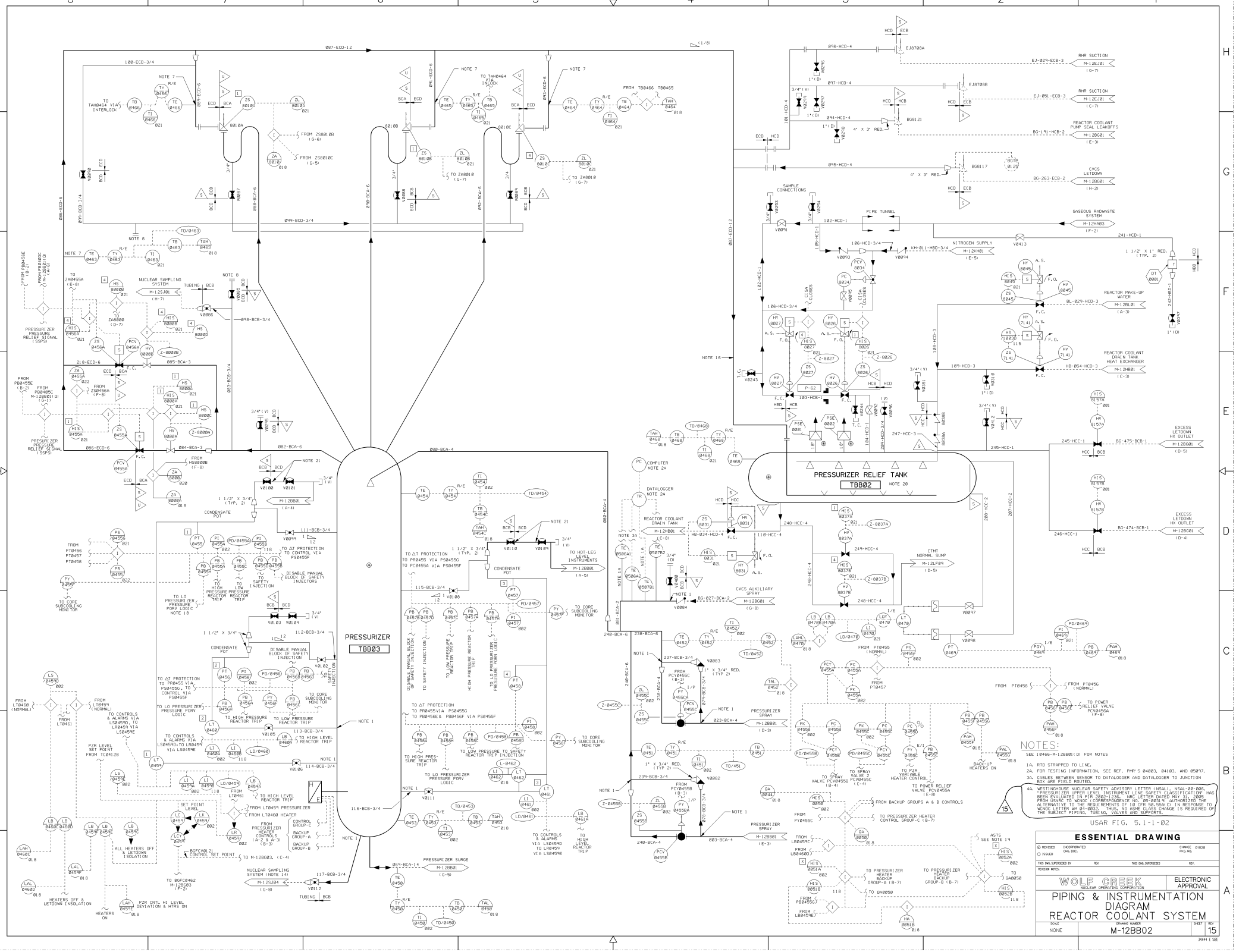

Released by Document Services Release Date: 01/19/06

INSTRUMENTATION CROSS REFERENCE

RC PUMP	PBB01A	PBB01B	PBB01C	PBB01D
THERMAL BARRIER COOLING	P10001	P10002	P10003	P10004
	P10005	P10006	P10007	P10008
	TE0009	TE0010	TE0011	TE0012
	TI0009			
	HS0009			
	TI0009			
	FT0017	FT0018	FT0019	FT0020
	HI5001A	HI5001A	HI5001B	HI5001B
	HV0013	HV0014	HV0015	HV0016
	Z-0013	Z-0014	Z-0015	Z-0016
	FE0017	FE0018	FE0019	FE0020
	FS0017	FS0018	FS0019	FS0020
	FAHL0017	FAHL0018	FAHL0019	FAHL0020
	FI0017	FI0018	FI0019	FI0020
MOTOR COOLING	FE0025	FE0026	FE0027	FE0028
	FT0025	FT0026	FT0027	FT0028
	FSHL0025	FSHL0026	FSHL0027	FSHL0028
	FE0029	FE0030	FE0031	FE0032
	FT0029	FT0030	FT0031	FT0032
	FSHL0029	FSHL0030	FSHL0031	FSHL0032
	FE0033	FE0034	FE0035	FE0036
	FT0033	FT0034	FT0035	FT0036
	FSHL0033	FSHL0034	FSHL0035	FSHL0036
	FI0033	FI0034	FI0035	FI0036
	FAHL0025			
REACTOR COOLANT PUMP CONTROL SWITCH	HI5037	HI5038	HI5039	HI5040
OIL LIFT PUMP CONTROL SWITCH	HI5041	HI5042	HI5043	HI5044
NO. 1 SEAL DELTA P	PT0153	PT0152	PT0151	PT0150
	PI0153A	PI0152A	PI0151A	PI0150A
	PDI0153	PDI0152	PDI0151	PDI0150
	PAL0153			
	PDY0153	PDY0152	PDY0151	PDY0150
	PD0153	PD0152	PD0151	PD0150
PUMP INLET NO. 1 SEAL TEMPERATURE	T-0172	T-0170	T-0168	T-0166
	TE0172	TE0170	TE0168	TE0166
PUMP INLET NO. 1 SEAL TEMPERATURE	T-0173	T-0171	T-0169	T-0167
	TE0173	TE0171	TE0169	TE0167
RCP STAND-PIPE LEVEL	HI5081	HI5080	HI5079	HI5078
	LS0181	LS0180	LS0179	LS0178
	LAH0181	LAH0180	LAH0179	LAH0178
	LAL0181	LAL0180	LAL0179	LAL0178
REACTOR MAKE-UP WATER SUPPLY	Z-0181	Z-0180	Z-0179	Z-0178
	LCV0181	LCV0180	LCV0179	LCV0178
	ZS0181	ZS0180	ZS0179	ZS0178
	LY0181	LY0180	LY0179	LY0178
NO. 2 SEAL LEAKOFF	FE0194	FE0193	FE0192	FE0191
	FI5194	FI5193	FI5192	FI5191
	FAHD194			
UPPER OIL RESERVOIR LEVEL	LT0495A	LT0495B	LT0495C	LT0495D
	LI0495A	LI0495B	LI0495C	LI0495D
	LSHL0495A	LSHL0495B	LSHL0495C	LSHL0495D
	LS0475B	LS0476B	LS0477B	LS0478B
LOWER OIL RESERVOIR	LAHL0475B			
THRUST BEARING UPPER SHOE	TE0479A	TE0480A	TE0481A	TE0482A
	T-0479A	T-0480A	T-0481A	T-0482A
THRUST BEARING LOWER SHOE	TE0479B	TE0480B	TE0481B	TE0482B
	T-0479B	T-0480B	T-0481B	T-0482B
UPPER RADIAL BEARING	TE0483A	TE0484A	TE0485A	TE0486A
	T-0483A	T-0484A	T-0485A	T-0486A
LOWER RADIAL BEARING	TE0483B	TE0484B	TE0485B	TE0486B
	T-0483B	T-0484B	T-0485B	T-0486B
STATOR WINDING	TE0487	TE0488	TE0489	TE0490
	T-0487	T-0488	T-0489	T-0490
	TR0500			
OIL LIFT PUMP PRESSURE SWITCH	PS0491	PS0492	PS0493	PS0494
NO. 1 SEAL LEAKOFF	HI5814A	HI5814B	HI5814C	HI5814D
	HV8141A	HV8141B	HV8141C	HV8141D
	ZS8141A	ZS8141B	ZS8141C	ZS8141D
	Z-8141A	Z-8141B	Z-8141C	Z-8141D
	HY8141A	HY8141B	HY8141C	HY8141D
SEAL COOLING WATER INLET	HI5835A	HI5835B	HI5835C	HI5835D
	HV8351A	HV8351B	HV8351C	HV8351D
	Z-8351A	Z-8351B	Z-8351C	Z-8351D
VIBRATION MONITOR	YE0471A	YE0472A	YE0473A	YE0474A
	YE0471B	YE0472B	YE0473B	YE0474B
	YE0471C	YE0472C	YE0473C	YE0474C
	YE0471D	YE0472D	YE0473D	YE0474D
	YE0471E	YE0472E	YE0473E	YE0474E
	YTI50471	YTI50472	YTI50473	YTI50474
	YTI50471A	YTI50472A	YTI50474A	YTI50474A
	YAH0471			
	YAHH0471			
UPPER BEARING OIL COOLER ENCLOSURE LEAK DETECTOR	LS0496A	LS0496B	LS0496C	LS0496D
	LA0496			

LINE NUMBER CROSS REFERENCE

PBB01A	PBB01B	PBB01C	PBB01D
EG-120-HBC-4	EG-133-HBC-4	EG-150-HBC-4	EG-162-HBC-4
EG-121-HBC-1	EG-134-HBC-1	EG-151-HBC-1	EG-163-HBC-1
EG-123-HBC-3	EG-136-HBC-3	EG-153-HBC-3	EG-164-HBC-3
EG-301-CBC-3	EG-298-CBC-3	EG-297-CBC-3	EG-300-CBC-3
HB-001-HCD-1	HB-002-HCD-1	HB-003-HCD-1	HB-004-HCD-1
BG-164-BCB-2	BG-168-BCB-2	BG-171-BCB-2	BG-173-BCB-2
BG-167-BCB-3/4	BG-169-BCB-3/4	BG-172-BCB-3/4	BG-174-BCB-3/4
LF-890-HCD-1	LF-892-HCD-1	LF-893-HCD-1	LF-891-HCD-1
LF-894-HCD-1	LF-820-HCD-1	LF-811-HCD-1	LF-812-HCD-1
118-HBC-4	144-HBC-4	165-HBC-4	186-HBC-4
119-HBC-4	145-HBC-4	166-HBC-4	187-HBC-4
120-HBC-4	146-HBC-4	167-HBC-4	188-HBC-4
121-HBC-4	147-HBC-4	168-HBC-4	189-HBC-4
122-HBC-4	148-HBC-4	169-HBC-4	190-HBC-4
123-HBC-4	149-HBC-4	170-HBC-4	191-HBC-4
124-HBC-1	150-HBC-1	171-HBC-1	192-HBC-1
125-HBC-1	151-HBC-1	172-HBC-1	193-HBC-1
126-HCD-3/4	152-HCD-3/4	173-HCD-3/4	194-HCD-3/4
127-HCD-3/4	153-HCD-3/4	174-HCD-3/4	195-HCD-3/4
128-HCD-3/4	154-HCD-3/4	175-HCD-3/4	196-HCD-3/4
129-HCD-1	155-HCD-1	176-HCD-1	197-HCD-1
130-BCB-2	156-BCB-2	177-BCB-2	198-BCB-2
131-BCB-2	157-BCB-2	178-BCB-2	199-BCB-2
132-BCA-2	158-BCA-2	179-BCA-2	200-BCA-2
133-CBC-3	159-CBC-3	180-CBC-3	201-CBC-3
133-CBC-1 1/2	159-CBC-1 1/2	180-CBC-1 1/2	201-CBC-1 1/2
134-BCB-3/4	160-BCB-3/4	181-BCB-3/4	202-BCB-3/4
138-CBC-3	164-CBC-3	185-CBC-3	206-CBC-3
140-HBC-6	141-HBC-6	142-HBC-6	143-HBC-6
217-CBC-3/4	219-CBC-3/4	221-CBC-3/4	223-CBC-3/4
001-BCA-27 1/2	021-BCA-27 1/2	038-BCA-27 1/2	056-BCA-27 1/2
014-BCA-31	036-BCA-31	053-BCA-31	072-BCA-31

VALVE NUMBER CROSS REFERENCE

PBB01A	PBB01B	PBB01C	PBB01D
V0113	V0143	V0173	V0203
V0114	V0144	V0174	V0204
V0115	V0145	V0175	V0205
V0116	V0146	V0176	V0206
V0117	V0147	V0177	V0207
V0118	V0148	V0178	V0208
V0119	V0149	V0179	V0209
V0120	V0150	V0180	V0210
V0121	V0151	V0181	V0211
V0124	V0154	V0184	V0214
V0127	V0157	V0187	V0217
V0128	V0158	V0188	V0218
V0129	V0159	V0189	V0219
V0130	—	V0190	V0220
V0131	V0161	V0191	V0221
V0132	V0162	V0192	V0222
V0133	V0163	V0193	V0223
V0134	V0164	V0194	V0224
V0135	V0165	V0195	V0225
V0136	V0166	V0196	V0226
—	V0168	—	—
V0318	—	V0338	—
V0140	V0170	V0200	V0230
V0141	V0171	V0201	V0231
V0142	V0172	V0202	V0232
—	V0405	—	—
V0235	V0237	V0239	V0241
V0236	V0238	V0240	V0242
V0245	V0246	V0247	V0248
V0405	—	—	—
V0250	V0255	V0257	V0259
V0251	V0256	V0258	V0260
HV0013	HV0014	HV0015	HV0016
HV8141A	HV8141B	HV8141C	HV8141D
HV8351A	HV8351B	HV8351C	HV8351D
LCV0181	LCV0180	LCV0179	LCV0178
V0261	V0262	V0263	V0264
V0270	V0271	V0272	V0273
V0274	V0275	V0276	V0277
V0278	V0279	V0280	V0281
V0282	V0283	V0284	V0285
—	V0317	—	—
—	V0333	—	V0344
V0319	V0320	V0339	—
—	—	—	V0345
V0321	—	V0340	V0346
V0322	V0335	V0341	V0347
V0323	V0336	V0342	V0348
V0324	V0337	V0343	V0349
—	—	—	V0325
V0407	V0326	V0360	V0365
V0327	—	—	—
V0408	—	—	V0328
V0329	—	—	V0366
—	V0330	—	—
—	V0331	—	—
—	—	V0332	—
V0352	V0354	V0356	V0358
V0353	V0355	V0357	V0359
—	V0350	V0361	V0364
—	V0362	V0363	—
—	V0334	—	—
—	V0348	—	V0368
—	—	—	V0369
V0370	V0371	—	—
V0374	—	—	—
V0375	V0376	V0377	V0378
V0379	V0380	V0381	V0382
—	V0383	V0384	—
—	—	V0385	—
V0386	V0387	V0388	V0389

PBB01A	PBB01B	PBB01C	PBB01D
V0390	V0391	—	V0392
V0393	V0394	V0395	V0399
—	—	—	V0396
V0443	V0445	V0447	V0449
V0444	V0446	V0448	V0450
V0451	V0452	V0453	V0454

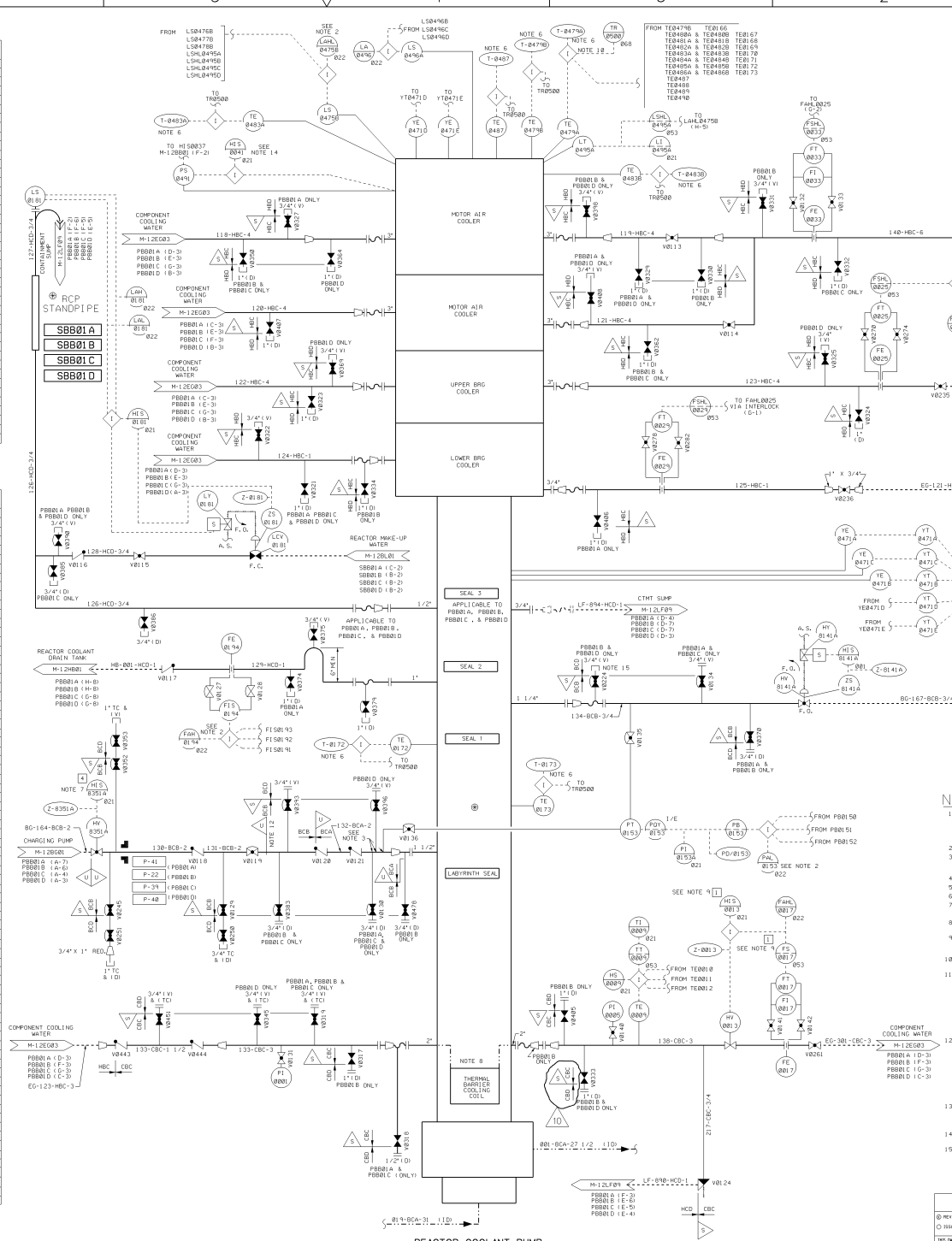

NOTES

1. REACTOR COOLANT PUMP PIPING AND INSTRUMENTATION SHOWN IS TYPICAL OF ALL FOUR (4) LOOPS THE NUMBERS SHOWN ON PUMP ARE UNIQUE TO PUMP "A" TAG NUMBERS CORRESPONDING TO OTHER PUMPS ARE GIVEN IN TABLES.
2. SINGLE ALARM POINT FOR ALL FOUR (4) PUMPS.
3. RESTRICTION ORIFICE 3/8" DIAMETER POINT AT WHICH QUALITY GROUP CLASSIFICATION IS CHANGED FROM A TO B.
4. DELETED.
5. REFERENCE WESTINGHOUSE DRAWING M-738-00005.
6. THESE ARE INPUTS TO THE NSSS COMPUTER.
7. VALVES HV8351A, HV8351B, HV8351C & HV8351D ARE ALL ASSOCIATED WITH CHANNEL 4 POWER SUPPLY.
8. THERMAL BARRIER COOLING COIL HAS INTERNAL PRESSURE DESIGN RATING OF 150 PSIA.
9. VALVES HI5001A, HI5001A, HI5001B & HI5001B AND FE0017, FE0018, FE0019 & FE0020 ARE ALL ASSOCIATED WITH CHANNEL 1 POWER SUPPLY & CONTROL.
10. TYPICAL T BAR SWITCHING TO MULTI POINT RECORDER TR 500 FROM NSSS COMPUTER.
11. ALL WELDS IN ASME SECTION III CLASS 1 COMPONENTS AND ASME SECTION III CLASS 1 PIPING OF NOMINAL PIPE SIZE GREATER THAN 1" MAY BE SUBJECT TO VOLUMETRIC EXAMINATION DURING THE PRESERVICE INSPECTION (PSI) AND/OR THE INSERVICE INSPECTION (ISI) PROGRAMS THE SPECIFIC WELDS AND THEIR INSPECTION REQUIREMENTS ARE DELINEATED IN THE APPLICABLE PSI/ISI WORK PLANS PROVIDED UNDER SPECIFICATION 18466-M-1009 BOUNDARIES OF THESE PIPING SYSTEMS ARE IDENTIFIED WITH A ▷ SYMBOL FOR CLARITY.
12. WELDS IN ASME SECTION III, CLASS 2 HIGH ENERGY PIPING CONTAINMENT PENETRATION AREA OF NOMINAL PIPE SIZE GREATER THAN ONE INCH, MAY BE SUBJECT TO VOLUMETRIC EXAMINATION DURING THE PSI AND/OR ISI PROGRAMS THE BOUNDARIES OF THESE PIPING SYSTEMS EXTEND THROUGH THE ISOLATION RESTRAINT SYSTEM INSIDE AND OUTSIDE OF CONTAINMENT WHICH PROTECTS THE CONTAINMENT PENETRATION THE SPECIFIC WELDS AND THEIR INSPECTION REQUIREMENTS ARE DELINEATED IN THE PSI/ISI WORK PLANS PROVIDED UNDER SPECIFICATION 18466-M-1009.
13. ◁▷ SYMBOLS ARE PROVIDED FOR CLARITY TO INDICATE ASME SECTION III, CLASS 2 PIPING SYSTEMS WHICH ARE SUBJECT TO THE PSI/ISI PROGRAMS AND CONTINUE ON TO THE P & ID'S.
14. LIGHT INDICATING ADEQUATE OIL PRESSURE IS AN INTEGRAL PART OF HIS.
15. FLANGED FOR PBB01B. CAPPED FOR PBB01D.

USAR FIG. 5.1-1-03

ESSENTIAL DRAWING

REVISED — INCORPORATED CHG. DOC. — CHANGE PKG. NO.
ISSUED

THIS DWG. SUPERSEDES — REV. — THIS DWG. SUPERSEDES — REV.

REVISION NOTES: REVISED PER PIR 2005-0501

WOLF CREEK NUCLEAR OPERATING CORPORATION — ELECTRONIC APPROVAL

PIPING AND INSTRUMENTATION DIAGRAM REACTOR COOLANT SYSTEM

SCALE	DRAWING NUMBER	SHEET	REV
NONE	M-12BB03		10

34044 [SIZE

Released by Document Services Release Date: 07/20/06

RV CORE SUBCOOLING MONITOR

TRAIN	SEP. GRP.	T/C JUNCT. BOX NO.		T/C NUMBER							PENE-TRATION NO.
A	1	BB0004A		38	30	33	5	45	41	SPR	75
				48	20	44	47	49	43	SPR	76
				42	39	15	35	13	46	7	77
				31	27	32	29	4	1	SPR	78
B	4	BB0004B		37	9	17	12	36	11	SPR	75
				24	23	19	50	25	22	18	76
				40	16	14	34	10	21	SPR	77
				26	2	8	28	3	6	SPR	78

RV CORE SUBCOOLING MONITOR NOTE 8

THERMOCOUPLE/CORE COOLING MONITOR DISPLAY INSTRUMENTS FOR CONTROL BOARD SECTION AND OR OTHER CABINETS	
INSTRUMENT TAG NO.	LOCATION
UU1390A	RP081A
UU1390B	RP081B
TR1390A	RP081A
TR1390B	RP081B
TI1390A	RL0022
TI1390B	RL0022
TAL1390A	RK0020
TALL1390B	RK0020

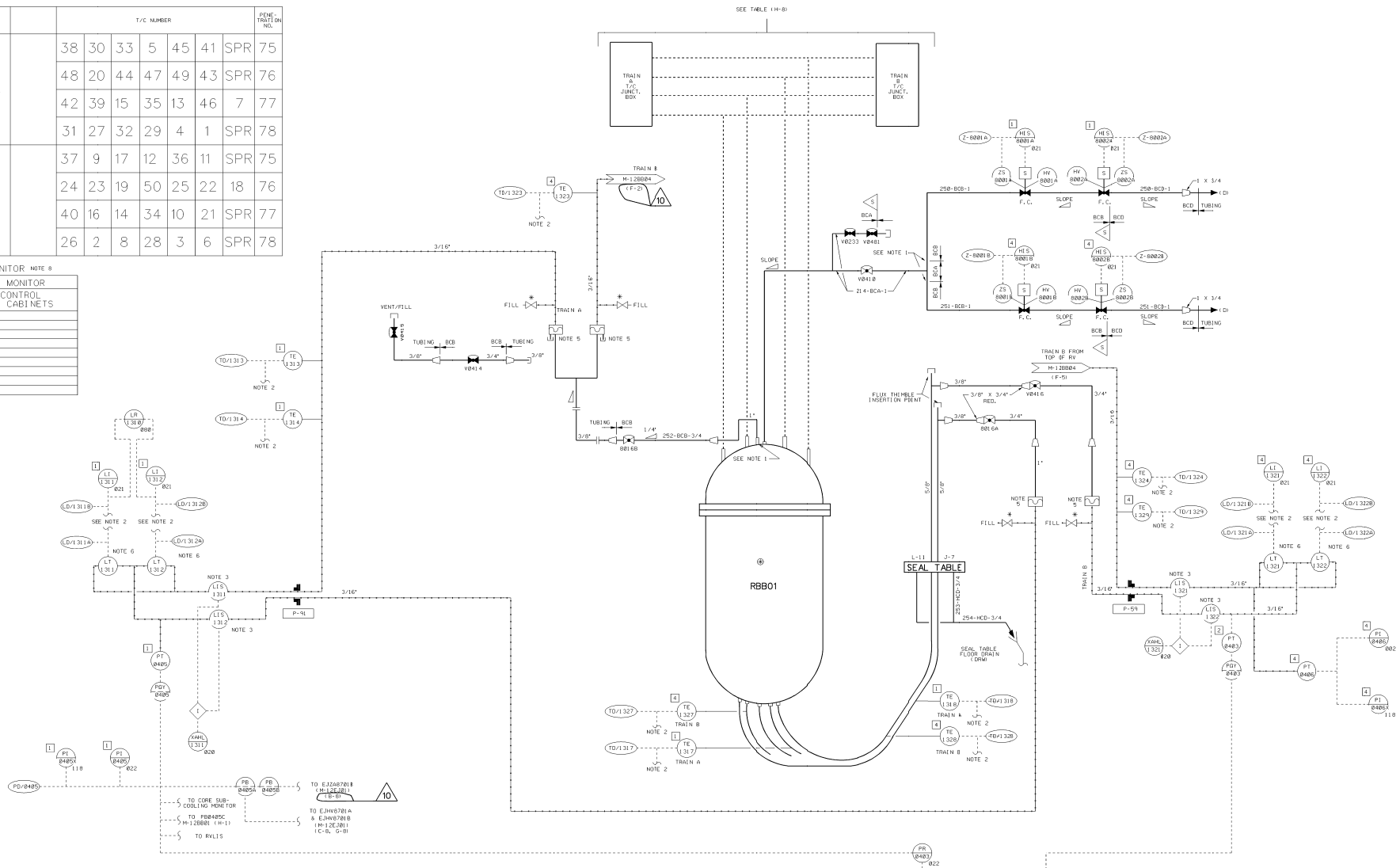

NOTES:

1. REFER TO NOTE 1 ON M-12BB01.
2. SEE WESTINGHOUSE PROCESS BLOCK DIAGRAMS-W DWG. NO. 2326D90 (4 SHEETS)-BECHTEL DWGS. M-761-00441, 442, 443 & 444, AND WESTINGHOUSE INSTALLATION SCHEMATIC.
3. LIS-1311, 1312, 1321 & 1322 ARE HYDRAULIC ISOLATORS WITH A MALFUNCTION INDICATION.
4. DELETED.
5. HYDRAULIC SENSORS.
6. LEVEL TRANSMITTER ELEVATION ABOVE HYDRAULIC ISOLATOR AND NEAR CONTAINMENT PENETRATION.
7. DELETED
8. FOR THERMOCOUPLE/CORE COOLING MONITOR SEE WESTINGHOUSE DRAWING 2332D78 (5 SHEETS) BECHTEL DRAWINGS M-764-00317, M-764-00318, M-764-00319, M-764-00320 & M-764-00321.

USAR FIG. 5.1-1-04

ESSENTIAL DRAWING

REVISED / ISSUED	INCORPORATED CHG. DOC.	CHANGE PKG. NO.
THIS DWG. SUPERSEDED BY	RB.	THIS DWG. SUPERSEDES REV.
REVISION NOTES	REVISED PER AP 05-010, SECTION 6.10, TABLE A, TYPE 2	

WOLF CREEK NUCLEAR OPERATING CORPORATION — ELECTRONIC APPROVAL

PIPING & INSTRUMENTATION DIAGRAM REACTOR COOLANT SYSTEM

SCALE	DRAWING NUMBER	SHEET	REV
NONE	M-12BB04		10

34444 E SIZE

Released by Document Services Release Date: 09/08/05

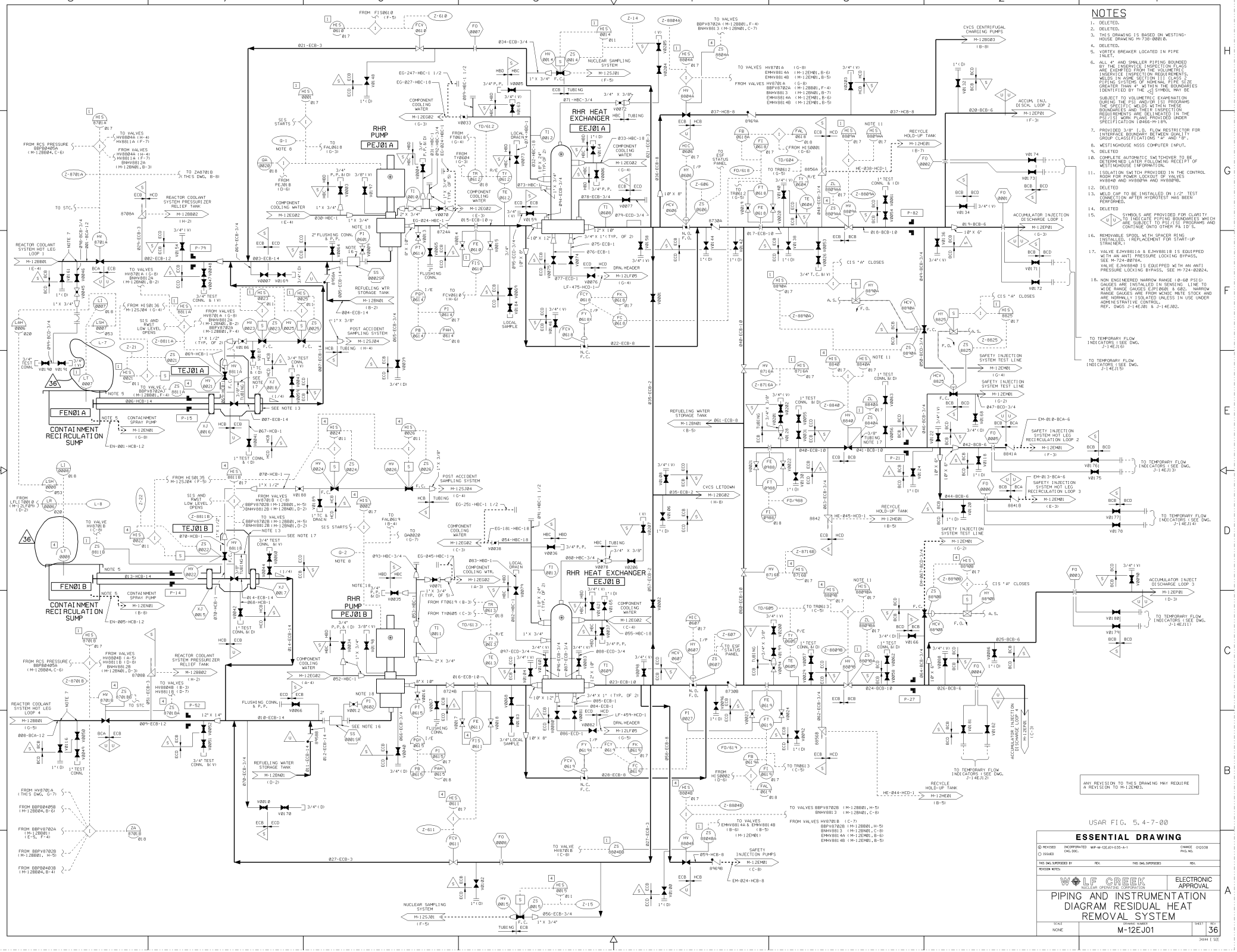

Released by Document Services Release Date: 10/25/06

C-03BB53 (Q)

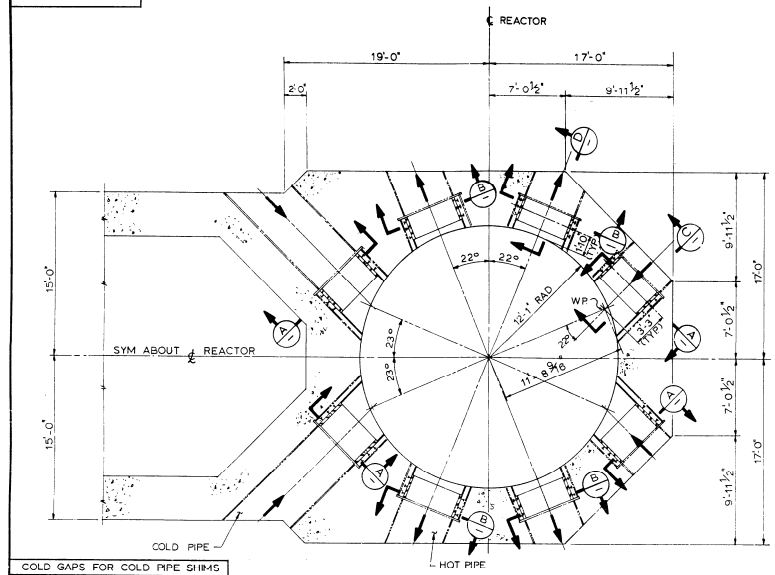

PLAN AT EL 2014'-6"
SCALE 1/4"=1'-0"

COLD GAPS FOR COLD PIPE SHIMS					
SHIM NO.	GAP		SHIM NO.	GAP	
1	9/16"	+ 0 − 1/4"	4 ✱	9/16"	+ 0 − 1/4"
2 ✱	3/4"	+ 0 − 1/4"	5 △4	3/8"	+ 0 − 1/4"
3 ✱	3/4"	+ 0 − 1/4"	6	3/8"	+ 0 − 1/4"

✱ SEE NOTE 14 FOR ADDITIONAL COLD GAP REQUIREMENTS. △4

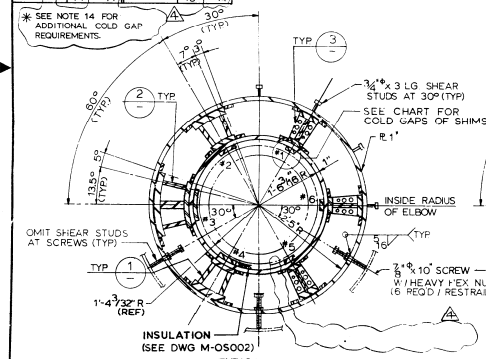

TYPICAL COLD PIPE

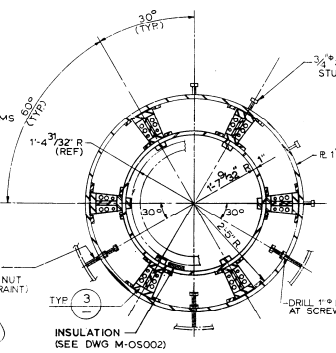

TYPICAL HOT PIPE

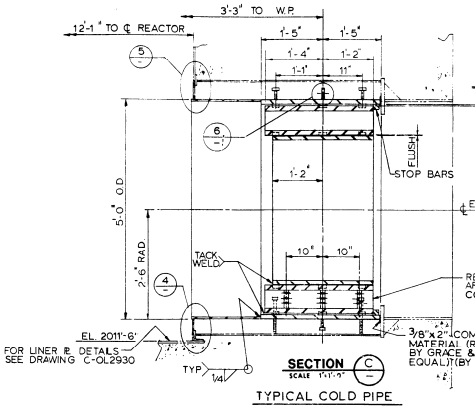

SECTION C
SCALE 1"=1'-0"

TYPICAL COLD PIPE

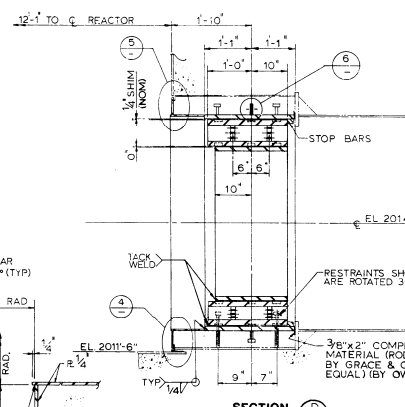

SECTION D
SCALE 1"=1'-0"

TYPICAL HOT PIPE

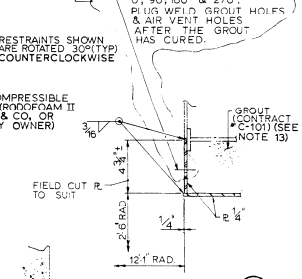

DETAIL 5
SCALE 3"=1'-0"

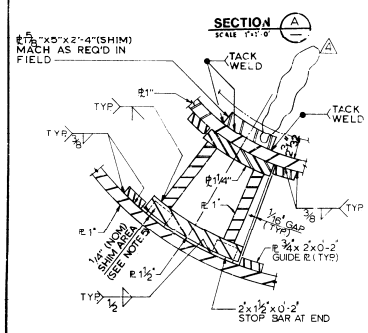

DETAIL 1
SCALE 3"=1'-0"

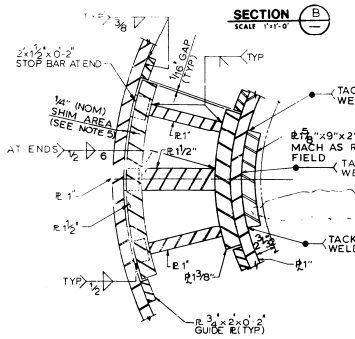

DETAIL 2
SCALE 3"=1'-0"

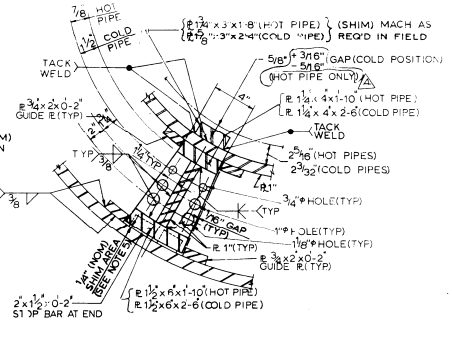

DETAIL 3
SCALE 3"=1'-0"

DETAIL 6
SCALE 1"=1'-0"

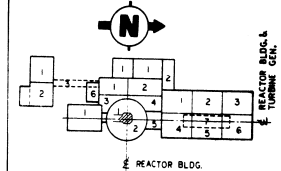

KEY PLAN

NOTES

1. ALL DIMENSIONS GIVEN ARE IN COLD POSITION U.N.O.
2. MATERIAL FOR THE 1" THICK COLLAR RING SHALL BE ASTM A516 GR. 70
3. THE 1" THICK COLLAR RING AND BUILT UP FILLER MEMBERS SHALL BE POST WELD HEAT TREATED.
4. SURFACES WHICH RECEIVE SHIMS AND/OR BEARING SHALL BE MACHINED TO THE DESIGN CONTOUR.
5. SHIM AREA AS INDICATED ON THE DRAWING SHALL BE PROVIDED WITH NOT LESS THAN 50% OF THE BEARING AREA.
6. SHIM PLATES SHALL BE SHOP TACK WELDED TO THE BUILT UP FILLER MEMBER AFTER PROPERLY ALIGNED.
7. THE RADIAL LOCATION FOR INSIDE RADIUS AT ANY POINT OF THE 1" THICK COLLAR RING SHALL NOT VARY FROM THE DESIGN RADIUS BY MORE THAN 1/8".
8. RESTRAINT ASSEMBLIES SHALL BE SHOP PRE ASSEMBLED TO INSURE PROPER ALIGNMENT AND DELIVER TO SITE AS ONE UNIT FOR EACH RESTRAINT.
9. THE MAXIMUM ALLOWABLE GAP AT THE SHIM OR BEARING SURFACES SHALL BE 1/16". SHIMS MAY BE ADDED BETWEEN THE OUTSIDE FACE OF THE INNER RING AND THE INSIDE FACE OF THE SPOKE TO MEET THIS REQUIREMENT.
10. THE FIELD MACHINED SHIMS SHALL ACCOUNT FOR THE AS-BUILT DIMENSIONS OF THE RESTRAINT RING, THE INSIDE FACE OF THE INNER RING, AND THE OUTSIDE DIAMETER OF THE HOT AND COLD PIPES AT EACH LOCATION.
11. DELETED
12. THE OUTER RING SHALL BE PRESSLD AGAINST THE COMPRESSIBLE MATERIAL AS MUCH AS POSSIBLE TO PREVENT LEAKAGE OF GROUT. △4
13. DELETED
14. THE AS-BUILT COLD GAP AT SHIM #3 MUST BE:
    A) SMALLER THAN (OR EQUAL TO) THE AS-BUILT COLD GAP AT SHIM #2;
    B) SMALLER THAN (OR EQUAL TO) THE AS-BUILT COLD GAP AT SHIM #4 PLUS 3/16".

REFERENCE DRAWINGS

C-OL2930 REACTOR BUILDING LINER PLATE
REACTOR CAVITY WALL

MATERIAL RESPONSIBILITY

1. STEEL TO BE FURNISHED UNDER SPEC 10466-C202

This drawing and the design it covers is the property of the Utilities which are participating in the SNUPPS Project. It is loaned on the borrower's express agreement that it will not be reproduced, copied, loaned, exhibited or used except in the limited way and private use permitted by written consent given by the SNUPPS Utilities to the borrower.

NOTICE: ALTERATION OF THIS DOCUMENT BY ANY PERSON OTHER THAN A LICENSED PROFESSIONAL ENGINEER OR A PERSON ACTING UNDER HIS OR HER DIRECTION IS ILLEGAL.

THE UNDERSIGNED HEREBY DISCLAIMS ANY RESPONSIBILITY FOR ANY DRAWINGS, DIAGRAMS, ESTIMATES, PLATS, REPORTS, SURVEYS OR OTHER DOCUMENTS OR INSTRUMENTS RELATING TO OR INTENDED TO BE USED FOR ANY PURPOSE OTHER THE ENGINEERING PROJECT FOR WHICH CONSTRUCTION OF WHICH THIS DOCUMENT IS TO BE USED, EXCEPT SUCH PLANS, SPECIFICATIONS, ESTIMATES, PLATS, REPORTS, SURVEYS OR OTHER DOCUMENTS OR INSTRUMENTS AS BEAR THE SIGNATURE AND THE SEAL OF THE UNDERSIGNED.

REVIEW LEVEL 2

PROFESSIONAL ENGINEER

STATE OF MISSOURI JAMES A. TOMEY E-18875 REGISTERED PROFESSIONAL ENGINEER

JAMES A. TOMEY LICENSED 8083 KANSAS PROFESSIONAL ENGINEER

4	NA	NA	NA	NA	NA	NA	NA	NA
3	NA	NA	NA	NA	NA	NA	NA	NA
REV. NO.	ELEC	CONT STR.	MECH.	CIVIL	PD LAYOUT	PD ENGL	ARCH.	

COORDINATION SIGN-OFF — DOCUMENT NO. C-03BB53(Q)

NO.	DATE	REVISIONS	BY	CHK	DES SUPV	ENGR	PROJ ENGR	APPR
4	11/74	REVISED PER FCR 2FC-1315-C AS NOTED						
3	10/74	REVISED AS NOTED						
2	7/74	REV. PER DCN C-03BB53-1-1						
1	12/73	REVISED PER DCN C-03BB53-1-1 AND AS NOTED						
0	7/73	ISSUED FOR CONSTRUCTION, PER DCN SUPPORTED FCN C-03BB55	GHS					

SCALE AS NOTED DATE — DESIGNED — DRAWN R. NANDY — CHK'D

BECHTEL
GAITHERSBURG, MARYLAND

SNUPPS

PIPE WHIP RESTRAINTS
REACTOR COOLANT SYSTEM
REACTOR VESSEL NOZ LE

UTILITY DRAWING NO.		REV
JOB NO.	FECHTEL DRAWING NO.	REV
10466	C-03BB53 (Q)	4

DRAWING APPLICABLE TO UNITS 1 2 3 4 5 6 7 8

6 NOV. 74 — 34x44 — E SIZE

I certify that the image contained on this frame was made in the normal and regular course of business, on the date stated below and that it is an accurate reproduction of the document(s) submitted to Micrographics.
DATE 6/20/85 OPERATOR SUPERVISOR