SOUTHERN CALIFORNIA
EDISON®
An *EDISON INTERNATIONAL*® Company

A. Edward Scherer
Manager of
Nuclear Regulatory Affairs

April 27, 2007

U. S. Nuclear Regulatory Commission
Attention: Document Control Desk
Washington, D. C. 20555

Subject: **Docket No. 50-362**
Special Report - Pre-Stressed Concrete Containment Tendon Surveillance Results
San Onofre Nuclear Generating Station, Unit 3

Dear Sir or Madam:

Attachment 1 to this letter provides the special report required by San Onofre Nuclear Generating Station Unit 3 Technical Specification 5.7.2.b, "Special Reports."

If you have any questions or require additional information, please contact me or Mr. Clay E. Williams at (949) 368-6707.

Sincerely,

Attachment 1: Special Report
Attachment 2: Procedure SO23-XXIV-3.8, "Containment Structural Integrity Surveillance"
Attachment 3: Procedure SO123-XXIV-20.2, "Maintenance Rule for Structures"
Attachment 4: Procedure SO23-XXIV-3.8.1, "Visual Examination of Containment Concrete Surfaces"

cc: B.S. Mallett, Regional Administrator, NRC Region IV
N. Kalyanam, NRC Project Manager, San Onofre Units 2 and 3
C. C. Osterholtz, NRC Senior Resident Inspector, San Onofre Units 2 & 3

P.O. Box 128
San Clemente, CA 92672
949-368-7501
Fax 949-368-7575

IE22

Special Report – Pre-Stressed Concrete Containment Tendon Surveillance Results San Onofre Unit 3

Technical Specification 5.7.2.b requires the Licensee to report, within 30 days of identification, any abnormal degradation of the containment structure detected during the tests required by the Pre-Stressed Concrete Containment Tendon Surveillance Program. The report is required to include a description of the tendon condition, the condition of the concrete (especially at tendon anchorages), the inspection procedures, the tolerances on cracking, and the corrective action taken.

Inspection Procedure:

Southern California Edison (SCE) performed the containment tendon inspections required by Technical Specification 3.6.1, "Containment," Surveillance Requirement 3.6.1.2 in accordance with SONGS procedure SO23-XXIV-3.8, "Containment Structural Integrity Surveillance," (Attachment 2).

Tendon Condition:

On March 28, 2007, during performance of San Onofre Nuclear Generating Station (SONGS) procedure SO23-XXIV-3.8, "Containment Structural Integrity Surveillance," four of the 55 total strands of tendon #9 failed. Tendon #9 is routed underneath the containment penetration for a main feedwater line. Tendon #9 is about 346 feet long and the failures occurred below the main feedwater line approximately 35 feet from the anchorage at buttress #3. The other tendons tested during this surveillance interval passed their acceptance criteria.

Condition of the Concrete:

SCE evaluated the accessible exterior concrete surfaces between buttress #3 and the approximate location of the tendon #9 strand failures, and the accessible exterior concrete surfaces at the tendon #9 anchorages in accordance with SONGS procedures SO123-XXIV-20.2, "Maintenance Rule for Structures," (Attachment 3) and SO23-XXIV-3.8.1, "Visual Examination of Containment Concrete Surfaces," (Attachment 4). The accessible exterior concrete surfaces examined are acceptable with no significant cracking. Both anchorages for tendon #9 are acceptable with no significant cracking.

Tolerances on Cracking:

Acceptable concrete crack tolerances are consistent with American Concrete Institute standards ACI 201.1R-68, "Guide for Making a Condition Survey of Concrete in Service," and ACI 207.3R-79, "Practices for Evaluation of Concrete in Existing Massive Structures for Service Conditions."

Corrective Actions:

1. SCE removed the four failed strands from tendon #9 in accordance with SONGS procedure SO23-XXIV-3.8. SCE will restore tendon #9 to a minimum of 54 strands and post-tension all strands. 54 strands will allow tendon #9 to be tensioned to its required design value.

2. Consistent with the SONGS tendon surveillance program, SCE will complete visual examinations of the following adjacent horizontal tendons:
    a. One tendon above tendon #9 (tendon #10), and
    b. Two tendons below tendon #9 (tendon #6, and tendon #7).

3. SCE is completing a cause analysis for this condition and may take additional corrective actions if required.

Containment Operability:

The SONGS Unit 3 containment contains 84 horizontal tendons. Only 81 horizontal tendons are required for containment operability. This allows three tendons to be detensioned at the same time for tendon surveillances. SCE detensioned only one tendon at a time when performing surveillances during this interval. Consequently, the failed strands in tendon #9 did not affect the operability of the Unit 3 containment.

ATTACHMENT 2

CONTAINMENT STRUCTURAL INTEGRITY SURVEILLANCE

TABLE OF CONTENTS

CONTAINMENT STRUCTURAL INTEGRITY SURVEILLANCE

1.0 OBJECTIVES

1.1 To provide for an evaluation of Containment structural integrity to ensure it is maintained in accordance with design requirements.

1.2 To ensure Containment structural integrity surveillances are performed in accordance with the applicable references listed in Section 2.0.

2.0 REFERENCES

2.1 NRC Commitments

2.1.1 SONGS Units 2 and 3 Technical Specification (TS) SR3.6.1.2, 5.5.2.9, 5.5.2.10, and LCS 3.6.100 and 5.0.103.2.10, and 5.0.103.2.5.

2.1.2 Title 10, Code of Federal Regulations, 10CFR 50.55a, Codes and Standards

2.2 Order

2.2.1 SO123-IN-1, Inservice Inspection/Inservice Test Programs

2.3 Procedures

2.3.1 SO123-XX-1 ISS 2, Action Requests/Maintenance Order Initiating and Processing

2.3.2 SO23-XXIV-3.8.1, Visual Examination of Containment Concrete Surfaces

2.3.3 SO23-XVII-1 ISS 2, Inservice Inspection Program Implementation

2.3.4 SO23-XVII-1.1 ISS 2, Inservice Inspection Program Maintenance

2.4 Other

2.4.1 ASME Code Section XI, 1992 Edition, 1992 Addenda of Subsection IWL

2.4.2 Final Safety Analysis Report (FSAR), Units 2 and 3, Chapter 3.8

2.4.3 IEEE 498-1980, IEEE Standard Requirements for the Calibration and control of Measuring and Test Equipment Used in Nuclear Facilities

2.4.4 Calculation C-257-11, Containment Inservice Tendon Surveillance Program

2.4.5 Vendor Log Number S023-204-3-133-0, "San Onofre Unit 2 Containment Post-Tensioning Friction Test Report"

2.4.6 Vendor Log Number S023-204-3-139-0, "Unit 3 Initial Stressing Report"

2.4.7 ASTM A-416, "Uncoated Seven-wire Stress Relieved Strand for Pre-stressed Concrete"

2.4.8 Regulatory Guide 1.35, "Inservice Inspection of Ungrouted Tendons in Prestressed Concrete Containments," Revision 3, July, 1990

2.4.9 Regulatory Guide 1.35.1, "Determining Prestressing Forces for Inspection of Prestressed Concrete Containments", July 1990

2.4.10 Calculation C-257-02.07, Containment Shell Design Post Tensioning

2.4.11 Viscosity Oil Company Letter, dated 3/21/97, Visconorust 2090P-4, Casing Filler

2.4.12 Topical Quality Assurance Manual (TQAM), Chapters 4-E and 7

3.0 PREREQUISITES

3.1 Before using this document, verify the revision and any issued Temporary Change Notices (TCNs) and/or ECs (Editorial Corrections) are current by using one of the following methods:

3.1.1 Access the Nuclear Document Management System (NDMS) (preferred method).

3.1.2 Check it against a Corporate Documentation Management-SONGS (CDM-SONGS) controlled copy and any issued TCNs/ECs.

3.1.3 Contact CDM-SONGS by telephone or through counter inquiry.

3.1.4 Obtain a user-controlled copy of this procedure from CDM-SONGS or NDMS.

3.2 If tendon surveillance is conducted during plant operation, clearance shall be obtained from the Control Room Supervisor for all activities to be performed at buttress No. 3 because of its proximity to the main steam relief valves in both Units 2 and 3.

3.3 Ensure tendon access platforms and cranes for lifting equipment to platform level are available, properly located, and in good working order.

3.4 Vertical tendons should be scheduled during cooler seasonal periods to minimize the potential loss of grease.

3.5 Test equipment shall be in good working order, with calibration in accordance with IEEE 498-1980, as indicated in certifications or stickers attached to equipment. This information shall be recorded on the applicable Attachments.

3.6 The tendon sheathing filler material (tendon grease), tensioning shims and O-rings shall be verified to be available for use in this surveillance.

3.7 The work shall be performed under the direction of the Responsible Engineer: a Registered Professional Civil or Structural Engineer (RPE) experienced in evaluating the inservice condition of structural concrete.

3.7.1 The Responsible Engineer shall have knowledge of the design and Construction Codes and other criteria used in design and construction of concrete containments in nuclear power plants.

3.7.2 The Responsible Engineer is responsible for the following:

.1 Development of plans and procedures for examination of concrete surfaces;

.2 Approval, instruction, and training of concrete examination personnel;

.3 Evaluation of examination results;

.4 Preparation of repair procedures;

.5 Submittal of report documenting results of examinations and repairs.

3.8 Personnel performing this surveillance shall be qualified/certified to ANSI/ASNT-CP-189-1991. Certifications based on SNT-TC-1A are valid until recertification is required.

3.9 The Authorized Nuclear Inservice Inspector (ANII) shall be notified prior to the performance of this test so that he may be given the option to witness the test.

ANII Notification
PERFORMED BY: _____ / _____
DATE

4.0 PRECAUTIONS

NOTE: Containment operability for potentially degraded conditions is determined by engineering analysis using the referenced calculations.

4.1 If tendon surveillance is conducted during plant operation, no more than one surveillance tendon in each directional group shall be detensioned at any one time.

4.2 Exercise extreme care to protect exposed tendon material and anchorage from moisture and foreign materials.

4.3 Personnel shall not stand behind the rams while the rams are pressurized.

4.4 Personnel shall keep hands and fingers away from the tendon and ram while the ram is pressurized, except as required to remove and install shims, take lift-off readings, and perform elongation measurements.

4.5 A number of surveillance tendons to be tested in plant years 15-40, have containment penetrations obstructing their pathway around the containment structure. These obstructions may impart excessive stresses on the tendons when they are "Lift-Off" tested or detensioned/retensioned for material examinations.

4.5.1 These stresses may cause the failure of one or more tendon strands. Extreme care shall be observed when testing these tendons.

4.5.2 Any failures of tendon strands shall be evaluated in accordance with Reference 2.3.1, S0123-XX-1 ISS 2, Action Requests/Maintenance Order Initiating and Processing.

4.5.3 The following tendons are affected:

UNIT 2		UNIT 3	
HORIZONTAL	VERTICAL	HORIZONTAL	VERTICAL
9	5-57	4	25-127
12	12-140	9	50-102
13	50-102	10	51-101
25	70-172	24	71-171
50	76-166	32	86-156
64	86-156	42	88-154
23	90-152	64	91-151
			95-147

4.6 DO NOT EXCEED a loading of 8000 PSI or 1800 KIPs on the hydraulic rams. Exceeding this rating could cause seal damage resulting in the rams leaking hydraulic fluid.

5.0 CHECKLISTS

5.1 The surveillance attachments (Attachments 4-8) shall be used to record and document all data taken during this surveillance including problems and corrective action taken.

6.0 PROCEDURE

6.1 Surveillance Requirements

NOTES: (1) All ASME code categories and item numbers satisfied by this procedure are listed in parentheses next to the applicable sections.

(2) Visual Examination

- VT-1 for Anchorage Hardware

  VT-1 examinations are conducted to detect discontinuities and imperfections on the surfaces of components, including such conditions as cracks, wear, corrosion, or erosion.

- VT-1C For Surrounding Concrete

  VT-1C visual examinations are conducted to determine deterioration and distress such as cracks, wear or corrosion of concrete and reinforcing steel.

(3) For *direct visual examination* procedure demonstration, minimum illumination 50 fc, maximum direct examination distance 2 feet, and maximum lower case character height of 0.044 inch is required. Document in comments on Attachment 5.

- Measurements of the near-distance test chart shall be made once before initial use with an optical comparator (10X or greater) or other suitable instrument to verify that the height of a representative lower case character, for the selected type size, meets the requirements.

(4) *Remote examination* may be substituted for direct examination. The remote examination shall be demonstrated to resolve the selected test chart characters.

- It is not necessary to measure illumination levels on each examination surface when the same portable light source or similar installed lighting equipment is demonstrated to provide the specified illumination at the maximum examination distance.

- The illumination levels from battery powered portable lights shall be checked before and after each examination or series of examinations, not to exceed 4 hours between checks.

6.1.1 FREQUENCY (CAT L-B, Item No. L2.10, L2.20, L2.30, L2.40, L2.50)

6.1.1.1 The containment tendons to be tested/examined shall be as specified in Attachment 1.

.2 Visual examination of the containment tendon end anchorages and surrounding concrete surfaces, shall be performed at the intervals specified in Attachment 1.

.3 The remainder of the containment concrete surface is examined in accordance with S023-XXIV-3.8.1, "Visual Examination of Containment Concrete Surfaces".

.4 Physical measurement of tendon lift-off forces, tendon detensioning, material tests and examinations shall be performed at the intervals specified in Attachment 1.

.5 The 10 year and subsequent examinations shall commence not more than 1 year prior to the specified dates and shall be completed not more than 1 year after such dates.

.6 All of the examinations performed in accordance with this procedure shall be verified by the Authorized Nuclear Inservice Inspector (ANII).

6.1.2 VISUAL EXAMINATIONS (CAT L-B, Item No. L2.30)

.1 Visually examine all tendon end caps for grease leakage and/or grease cap deformation prior to or during the surveillance.

.1.1 Repair leaks noted on any of the tendons as required during the surveillance and document the results on Attachment 4.

_____ / _____
PERFORMED BY: / DATE

.1.2 If a significant loss of grease is observed from these leaks, replace the grease in accordance with Section 6.7.3.

.1.3 If replacement of the gasket (O-ring) is required, due to excessive leakage, perform a visual examination of the tendon anchorage in accordance with Section 6.2 while replacing gasket.

.1.4 If tendon end cap deformation has occurred which could indicate deterioration of the anchorage hardware, then the grease cap must be removed and the visual examination of Section 6.2 shall be performed.

6.1.2.2 Visually examine all required tendons, for a particular surveillance year, per Attachment 1 in accordance with Section 6.2.

.3 Wedge retainer plates, if present, shall be removed so that a visual examination of the wedges may be performed. Reinstallation of wedge retainer plates is optional.

.4 Exposed horizontal tendons shall only be inspected during dry conditions to preclude contamination of the sheathing filler and to minimize the potential for corrosion of tendon components.

.5 If upon removal of the grease cap, it is determined that the anchorhead is broken or tendon strands/wires have slipped or broken:

.5.1 All work **SHALL STOP** on that tendon,

.5.2 All personnel **SHALL LEAVE** the area of the tendon, and

.5.3 An Action Request (AR) **SHALL BE INITIATED AND DISPOSITIONED** prior to proceeding.

6.1.3 TENDON LIFT-OFF FORCE MEASUREMENTS (CAT L-B, Item No. L2.10)

.1 Perform Tendon Lift-off force measurements of the tendons listed in Attachment 1, in accordance with Section 6.3.

.2 If the lift-off force of any tendon does not meet the acceptance criteria of Section 7.2, also check an adjacent tendon on each side of the defective tendon for lift-off force.

.3 If both adjacent tendons are found acceptable, the surveillance program may proceed, considering this single deficiency as unique and acceptable.

6.1.4 TENDON DETENSIONING AND MATERIAL TESTING (CAT L-B, Item No. L2.20)

.1 Perform tendon detensioning, strand material testing and examination in accordance with Section 6.4.

6.1.5 SHEATHING FILLER (CAT L-B, Item No. L2.40, L2.50)

.1 Remove Sheathing Filler in accordance with Section 6.2.1.

.2 Perform Sheathing Filler Examination in accordance with Section 6.5.

.3 Perform Sheathing Filler Testing in accordance with Section 6.6.

6.2 Visual Examinations

NOTE: Complete removal of sheathing filler is not required, provided that all filler which has been drained out or removed during surveillance is replaced.

6.2.1 TENDON END CAP AND GREASE REMOVAL

.1 Remove the tendon end cap by opening the petcock to vent the cap and then remove the hexhead capscrews that secure the end cap to the bearing plate.

.2 Remove the tendon end cap from the bearing plate.

.3 Remove the gasket ("O" ring).

.4 Remove the excessive grease from the tendon anchorage ensuring four (4) one-quart samples, two (2) from each end, are collected and labeled with their appropriate location.

.4.1 Collect all grease removed in such a manner that the volume removed can be measured. Record volume removed on Attachment 4.

.5 Clean the end anchorage components so that the visual examination may be performed per Section 6.2.2.

.6 Protect exterior horizontal tendons from the weather by using plastic sheeting when end cap is removed and left unattended overnight.

NOTE: See Attachment 9, Figures No. 1, 2 and 3 for terminology of tendon anchorage.

6.2.2 END ANCHORAGE EXAMINATION

.1 Visually examine the end anchorages and identify any apparent changes in their appearances on Attachment 5 as follows:

.1.1 Anchorhead (Part #2) and Wedges (Part #11) -

- Examine the exposed portion of the anchorhead and wedges for any indication of corrosion, grease coverage, deformations or cracking.

- For detensioned tendons, also examine bearing portion of the anchorhead.

6.2.2.1.2 Anchorhead Shims (Part #3) (for Type B tendon only) -

- Examine anchorhead shims for corrosion, cracking or deformations.
- Examine for complete grease coverage.
- Record and measure all unevenly seated wedges with an end greater than 1/8" from face of anchorhead. (Refer to Attachment 9, page 4 for wedge locations)

.1.3 Bearing Plate (Part #1) and Trumpet - The Trumpet is the terminal, flared portion of the duct which carries the tendon up to the anchorhead.

- Examine bearing plate for cracking, excessive deformation and movement into the anchorage.
- When Type B tendons are detensioned, examine the trumpet for grease coverage and physical appearance of grease.

.1.4 Strand -

- Examine the exposed strands for broken wires, loose wedges, or any indication of slippage into the anchorhead.
- Examine for complete grease coverage.
- Record slip length of any wires or strands observed. (Refer to Attachment 9, page 4 for strand locations)

.2 Attach additional sheets as required to record and map out of place wedge grip marks, unevenly seated or broken wedges, or slipped strands or wires.

6.2.3 CONCRETE SURFACE EXAMINATION

.1 Visually examine the concrete extending outward a distance of 2 ft. from the edge of the bearing plate and identify any abnormal material behavior on Attachment 5, as follows:

.1.1 Examine concrete at horizontal anchorage for any open cracks or signs of spalling.

.1.2 If cracks greater than 0.01 inches in width are present, prepare a sketch of the area recording all cracks in the concrete which exceed 0.01 inches in width in 0.005 inch increments.

.1.3 Attach the sketch to or prepare the sketch on Attachment 5.

6.2.4 The visual examination of the tendon end anchorage area and the concrete surrounding the bearing plate shall meet the Acceptance Criteria of Sections 7.1 and 7.4.

6.3 Lift-Off Force Measurements

NOTES: (1) The purpose of performing tendon end lift-off measurement is to monitor the effectiveness of the tendon prestressing to ensure that it remains within allowable limits during the tendon design 40-year life span.

(2) Wedge retainer plates shall be used on tendons during performance of lift-off force measurements.

CAUTION If the hydraulic ram is repositioned at any time during lift off measurements, the operator shall check to ensure that **ALL PULLING WEDGES HAVE BEEN REMOVED** prior to repositioning to prevent breaking tendon strands.

CAUTION The Jacking Pressure for lift-off measurements shall not exceed 80% of the ultimate tensile strength (270 KSI) or 1800 KIPS for a 55 strand tendon.

6.3.1 Tendon lift-off force is the force required to separate the anchorhead from the bearing plate. The lift-off is accomplished by a hydraulic ram and is measured by a gauge calibrated to the ram in accordance with Attachment 11.

.1 The hydraulic ram and gauges shall be calibrated prior to the start of the surveillance.

.1.1 Accuracy for the calibration shall be within 1.5% of the specified minimum ultimate tensile strength of the tendon (±34 KIPS).

.1.2 At the time of calibration, a conversion chart shall be prepared converting gauge pressure (in KSI) to ram force (in KIPS) in accordance with Attachment 11, which is used to determine lift-off force measurements.

.2 Following calibration, the rams and gauges shall have lead seals or tape applied to bolts and access holes to prevent alteration.

.3 The lift-off force is measured when the anchorhead and/or shims have separated from the bearing plate by 1/16th to 1/8th of an inch, as measured by inserting a feeler gauge.

.4 Measurement of lift-off force in Type A tendons is required only if a Type B tendon fails to meet the acceptance criteria specified in Section 7.2.

6.3.1.5 The hydraulic ram and gauges shall be post test calibrated following the final measurement. Accuracy of the calibration shall be as specified in 6.3.1.1.1. Results in excess of the specified accuracy tolerance shall be documented on an Action Request (AR) for evaluation.

6.3.2 Install the hydraulic ram in accordance with the figures on Attachment 9. Apply pressure and stress the tendon until the anchorhead "LIFTS-OFF" and separates from the bearing plate.

.1 Read the lift-off pressure from the ram gauges, then convert it to force from the conversion equations/charts prepared during ram/gauge calibration of step 6.3.1.1.

.2 Record both pressure and force on Attachment 6.

.3 Perform the lift-off force measurement a MINIMUM of 3 times and calculate the average value.

.4 If the lift-off force measurement in a selected surveillance tendon lies below 95% of the Prescribed Lower Limit (PLL)(limits per Attachment 2), check two additional tendons, one on each side of this tendon, for their prestressing force by means of lift-off force measurement.

.5 If the lift-off forces of these two adjacent standard tendons are within the prescribed limits of Attachment 2 and the lift-off force for the surveillance tendon is greater than 90% of the PLL, the surveillance may continue considering the deficiency as unique and acceptable.

.6 The surveillance tendon with lift-off force below the lower limit but above 90% of the lower limit, shall be retensioned to a lift-off force equal to +0%, -5% of the maximum upper limit.

.6.1 Additional permanent shims shall be provided as necessary.

.7 If either one of the two adjacent tendons exhibits a lift-off force below the prescribed lower limit, stop the surveillance process and initiate an action request to perform an engineering investigation and evaluation of the condition.

6.3.3 Upon completion of the lift-off force measurements, restore the tendons in accordance with Section 6.7.3.

.1 If detensioning, material testing and examination is required per Attachment 1, then proceed to Section 6.4 after lift-off force measurements are performed.

6.4 Tendon Detensioning, Material Testing and Examination

6.4.1 STRAND SELECTION AND REMOVAL

CAUTION Detensioning and retensioning operations shall be performed at both ends simultaneously. Ensure adequate communications are available at both tendon ends prior to performing these activities.

.1 The tendons that require material tests and examinations are specified in Attachment 1.

CAUTION The Jacking Pressure shall not exceed 80% of the ultimate tensile strength (270 KSI or 1800 KIPS) for a 55 strand tendon.

.2 After completion of lift-off force measurements, detension the selected tendon to permit removal of a single strand from the tendon.

.3 During detensioning measure the elongation of strands at 100%, 70%, 35%, 10% of jacking pressure. Determine the elongation by measuring the distance from the bearing plate to the base of the anchorhead.

NOTE: There are 5 painted strands on each surveillance tendon. Strands are also coded by clipping 1 to 5 wires of the strand approximately 1" from the end. Any one of these painted (coded) strands may be removed for tensile and elongation testing.

.4 Remove two (2) tendon strands for examination and testing, one (1) from a horizontal hoop and one (1) from an inverted-U tendon.

.5 Examine all of the strands in each surveillance tendon by observing the movement of each strand end during detensioning operations.

.6 If visual observation during detensioning indicates the possibility of broken or damaged strands or wires (such as a wire extending more than three inches beyond the rest of the group) perform a positive continuity check on each of the suspected broken or damaged strands or wires.

CAUTION Do not exceed 60% of the ultimate tensile strength (270 KSI or 25 KIPS) of a strand in performing a positive continuity check.

6.4.1.6.1 The positive continuity check shall consist of pulling each suspected strand in the tendon from one end.

.6.2 Record any broken or missing strands or wires on Attachment 5.

.6.3 Remove any broken strands or wires and examine to determine cause of breakage.

.6.4 Store the strand or wire in accordance with 6.4.3 for further tests (if required) to determine the cause of breakage.

.6.5 Record the cause of breakage on Attachment 5.

6.4.2 STRAND EXAMINATION AND IDENTIFICATION

.1 Identify the locations of both ends of the strand selected for removal. Record the locations on Attachment 5.

NOTE: Care should be taken to ensure that the strand wires are not scored or burred during removal so that non-marred 100 inch long samples may be taken for testing.

.2 Examine the strand wires and record any corrosion or mechanical damage on Attachment 7. Determine the location of the most severe corrosion and any wedge slippage marks.

6.4.3 STORING AND PROTECTING STRAND TEST SPECIMENS

.1 Cover test specimens not tested within 24 hours after removal from the tendon with Visconorust 2090P-4 and store (in a manner which does not wipe away the Visconorust 2090P-4 preservative) until tested.

.2 Preserve in a similar fashion remaining strand material removed but not tested, and keep them in a container, or 6 foot or larger diameter rolls, until it is determined that no further testing is needed.

6.4.4 STRAND TENSILE AND ELONGATION TESTS

NOTE: Strand tensile test specimens should be approximately 100 inches long.

6.4.4.1 Perform tensile tests on each of the strands removed in step 6.4.1.4 in accordance with Section 6 of Reference 2.4.7.

.2 Remove and test specimens from each strand, one from each end, one from mid-length, and one in the location of the most corroded area, if any.

.3 Record data on Attachment 8.

.4 The strand shall meet the acceptance criteria specified in Section 7.3.

6.5 Sheathing Filler Examination

6.5.1 CONCRETE SURFACE TEMPERATURE

.1 Measure the containment exterior concrete temperature near the tendon and record it on Attachment 4.

6.5.2 FILLER EXAMINATION

.1 Visually examine the sheathing filler at each end of the tendons and the grease adhering to wire removed from a tendon.

.2 Record any noticeable change in the physical appearance of the filler, as compared to the replacement filler material on Attachment 4.

.3 Record the presence and quantity of any free water contained in the end caps, as well as any that drains from the tendon during the examination, on Attachment 4.

6.6 Sheathing Filler Testing

6.6.1 CHEMICAL TESTS

.1 From the set of four filler samples taken from each tendon, chemically test one sample from each end. Use the test methods outlined in Attachment 10, "Laboratory Testing of Sheathing Filler Material."

.2 Record results of these tests on forms provided by the testing laboratory.

- Water Soluble Chlorides
- Water Soluble Sulfides

6.6.1.2 (Continued)

- Water Soluble Nitrates
- Neutralization Number
- Water Content by Weight

.3 Free water samples shall be analyzed to determine pH.

6.6.2 CHEMICAL TEST ACCEPTANCE

.1 Compare the test results with the acceptance criteria outlined in Section 7.5. If the test results from the first sample do not meet the acceptance criteria, repeat the test that produced the unacceptable results using the second sample from each end of the tendon.

.2 Record as in step 6.6.1.

.3 Initiate an Action Request (AR) if the second sample also fails to meet the acceptance criteria of Section 7.5. All or a portion of the sheathing filler shall be replaced as determined by the Responsible Engineer.

6.7 Tendon Restoration

6.7.1 DETENSIONED TENDONS

CAUTION During retensioning, jacking pressure shall not exceed 70% of the ultimate tensile strength (270 KSI or 1560 KIPS) for 54 strands.

.1 Restore each detensioned tendon to +0% -5% of the maximum value found in Attachment 2 for the appropriate tendon and year of surveillance.

.2 **DO NOT** exceed 70% of the minimum ultimate tensile strength (270 KSI) of the tendon based on the number of strands in the tendon at the time of retensioning.

6.7.2 ELONGATION MEASUREMENT

NOTES: (1) If target restoration force is above 1560 KIPS, restore tendon to +0, -5% of 1560 KIPS.

(2) If less than 54 strands, request a new lift-off target force from the Responsible Engineer.

6.7.2.1 During retensioning measure the elongation of strands at 10%, 35%, 70%, 100% of jacking pressure.

.2 Determine the elongation by measuring the distance from the bearing plate to the base of the anchorhead. Elongation measurements shall meet the requirements of Section 7.2.4.

.3 Record the pressure and elongations on Attachment 6.

.4 Install shims as required for tendon restoration.

.5 Perform lift-off measurement per Section 6.3.2.

.6 Visually inspect for broken wires or slipped strands.

.7 If required, cut strand wires evenly to enable replacement of grease cap. Indicate on data sheets the length trimmed.

6.7.3 RESEALING TENDONS

CAUTION Do not reuse filler which has been removed from the tendon.

CAUTION In cases where there has been an excessive loss of filler or where the filler may be contaminated, remove and replace all or a portion of the filler in a tendon as determined by the Responsible Engineer.

CAUTION Vertical tendons shall be refilled within five (5) days (120 hours) of filler removal to prevent the formation of air pockets or voids within the tendon ducts.

.1 Prior to refilling, vertical tendon end caps with 1/8 inch vent valves shall be replaced with a ½ inch valve. Drill and tap as required.

.2 Install tendon end caps using new gaskets (O-rings).

.3 Install end caps.

NOTES: (1) Pump pressure should not exceed 150 psi except at the start of pumping into a cool tendon. Do not pump additional filler material with vents in closed position without Engineering approval.

(2) The temperature of the filler at the filler pump shall be 160°F minimum and 250°F maximum.

.4 Refill the tendon sheathing with Visconorust 2090P-4 sheathing filler or an approved equivalent.

6.7.3.5 Replace all lost sheathing filler by pumping under pressure through a hose attached to the grease cap filler plug.

.6 Use all available valves, vents and drains during this operation to avoid the entrapment of air in the sheathing filler.

.7 Continue pumping until at least two gallons of filler without any air bubbles or visible foreign substances have come out of the outlet or vent.

.8 Measure the volume of sheathing filler replaced in each tendon and record on Attachment 4.

NOTES: (1) These formulas are based on actual grease volume.

(2) The tendon duct length may be obtained from Attachment 3.

.9 Determine the void ratio for each half of the tendon duct using the formulas below. Record on Attachment 4.

FORMULA 1: STANDARD TENDON FORMULA (PER END)

$$\% \text{ Void} = \frac{(\text{Volume Added} - \text{Volume Removed})}{(1/2 \text{ Tendon Duct Length} \times 0.912 \text{ gal/ft}) + 14.8 \text{ gal.}} \times 100\%$$

FORMULA 2: SURVEILLANCE TENDON FORMULA (PER END)

$$\% \text{ Void} = \frac{(\text{Volume Added} - \text{Volume Removed})}{(1/2 \text{ Tendon Duct Length} \times 0.912 \text{ gal/ft}) + 24.3 \text{ gal.}} \times 100\%$$

FORMULA 3: CORRECTION FACTOR FOR REMOVED OR BROKEN TENDON STRAND

$$V_{ADD} = V_{ADD} - (0.0079 \text{ gal/ft} \times \tfrac{1}{2} \text{ Tendon Duct Length})$$

.10 The total void ratio is obtained by adding the void ratio from each end and dividing by two (2).

.11 The total void ratio shall meet the Acceptance Criteria of 7.5.

7.0 ACCEPTANCE CRITERIA

7.1 Concrete Surface Condition

7.1.1 The condition of the concrete surface is acceptable if the Responsible Engineer determines that there is no evidence of damage or degradation sufficient to warrant further evaluation or repair.

7.2 Tendon Force. Tendon Forces are acceptable if:

7.2.1 The average of all measured tendon forces, including those measured in 7.2.2.2, for each type of tendon is equal to or greater than the minimum required prestress specified at the anchorage for that type of tendon;

7.2.2 The measured force in each individual tendon is not less than 95% of the predicted force unless the following conditions are satisfied:

.1 The measured force in not more than one tendon is between 90% and 95% of the predicted force;

.2 The measured forces in two tendons located adjacent to the tendon in 7.2.2.1 are not less than 95% of the predicted forces; and

.3 The measured forces in all the remaining sample tendons are not less than 95% of the predicted force.

7.2.3 The evaluation of consecutive surveillances of prestressing forces for the same tendon or tendons in a group indicates a trend of prestress loss such that the tendon force(s) would not be less than the minimum design pre- stress requirements before the next inspection interval.

7.2.4 The elongation corresponding to a specific load (adjusted for effective wires or strands) during retensioning of tendons differs by $\leq$ 10% from that recorded during the last measurement. An evaluation shall be performed if the elongation is > 10% to determine whether the difference is related to wire failures or slip of wires in anchorage.

7.3 Tendon Strands. The condition of the strand samples are acceptable if:

7.3.1 Samples are free of physical damage;

7.3.2 Sample ultimate tensile strength and elongation are not less than minimum specified values.

.1 The strand shall fail at greater than 270 ksi (guaranteed ultimate tensile strength (GUTS)) of the tendon material.

7.3.2.2 The yield strength of the strand measured at 1% extension under load shall be not less than 90% GUTS or 243 ksi.

.3 The total elongation under load shall not be less than 3.5% using a gauge length of not less than 24 inches.

7.4 Tendon Anchorage Areas. The condition of tendon anchorage areas is acceptable if:

7.4.1 There is no evidence of cracking in anchor heads, shims, or bearing plates;

7.4.2 There is no evidence of active corrosion;

7.4.3 Broken or unseated wires, broken strands, and slipped strands (SONGS uses a wedge system in lieu of buttonheads) were documented and accepted during a preservice examination or during a previous inservice examination;

7.4.4 Cracks in the concrete adjacent to the bearing plates do not exceed 0.010 inches in width.

7.4.5 There is no evidence of any (all tendons) grease cap deformation that indicates a possible deterioration of anchorage hardware.

7.5 Corrosion Protection Medium.

7.5.1 Corrosion protection medium is acceptable when the reserve alkalinity, water content, and soluble ion concentrations of all samples are within the limits specified.

.1 The Total Base Number (reserve alkalinity) as determined by the method shown in Attachment 10 shall be no less than 35.

.2 No free water shall exist within the sheathing filler.

.3 No significant change in the physical appearance of the sheathing filler.

.4 The concentration of impurities (soluble ion concentrations) shall not exceed:

.4.1	Chlorides	2 ppm
.4.2	Nitrates	4 ppm
.4.3	Sulfides	2 ppm
.4.4	Water	10% Dry Weight

7.5.2 The absolute difference between the amount of sheathing filler grease removed and the amount replaced (void ratio) is less than 10 percent of the net duct volume.

7.5.3 Complete grease coverage shall exist for the anchorage system.

8.0 EVALUATION REPORT

8.1 Items with examination results that do not meet the acceptance standards of Section 7.0 shall be documented by an Action Request (AR) to evaluate the condition and shall be included in the Engineering Evaluation Report. The report shall include:

8.1.1 The cause of the condition which does not meet the acceptance standards;

8.1.2 The acceptability of the concrete containment without repair of the item;

8.1.3 Whether or not repair or replacement is required and, if required, the extent, method, and completion date for the repair or replacement;

8.1.4 Extent, nature, and frequency of additional examinations.

8.1.5 The trend evaluation of consecutive surveillances of prestressing forces for the same tendon or tendons in a group compared to the minimum design prestress requirements before the next inspection interval.

8.1.6 The evaluation of elongation measurements during retensioning of tendons as compared to that recorded during the last measurement.

8.1.7 The void ratio for sheathing filler grease replacement.

8.1.8 Copies of all completed data records and material test results including water content.

8.1.9 Copies of all Action Requests generated as a result of the Containment Structural Integrity Surveillance activities.

8.2 The Engineering Evaluation Report shall be reviewed and approved by a Registered Professional Civil Engineer.

8.2.1 Surveillance data on Attachments 4 through 8 shall be entered into the Inservice Inspection System (ISIS) database.

8.2.2 The Evaluation Report should include the applicable ISIS database reports for the surveillance performed.

8.3 The Engineering Evaluation Report shall be reviewed by the ANII.

8.4 The Engineering Evaluation Report shall be reviewed and approved by the Design Engineering Supervisor.

8.5 The following conditions shall be identified and transmitted to the ISI Engineer for inclusion in the ISI Summary Report required by IWA-6000:

8.5.1 When the elongation corresponding to a specific load (adjusted for effective wires or strands) during retensioning of tendons differs by more than 10 percent from that recorded during the last measurement.

8.5.2 The sampled sheathing filler grease contains chemically combined water exceeding 10 percent by weight or the presence of free water.

8.5.3 The absolute difference between the amount removed and the amount replaced exceeds 10 percent of the tendon net duct volume.

8.5.4 Grease leakage is detected during general visual examination of the containment surface.

8.6 A copy of all forms and documents including the final report of the surveillance generated during the performance of this procedure shall be filed in CDM-SONGS.

TENDON SURVEILLANCE - UNIT 2

	TENDON NUMBERS									
Years After Initial Structural Integrity Test (12/3/1980)	1		3		5		10		15	
Type of Examination	H*	U**	H	U	H	U	H	U	H	U
Visual examination of End Anchorages and adjacent concrete surface	20 86 97 53 64	31-121 9-143 66-176 88-154	5 36 79 113 87	13-139 35-117 4-58 78-164	42 86 75 9 108	64-178 9-143 94-148 19-133	20 86 53	66-176 9-143 39-113	50 114 13	12-140 5-57 96-146
Prestress monitoring tests	20 86 97 53 64	31-121 9-143 66-176 88-154			42 86 75 9 108	64-178 9-143 94-148 19-133	20 86 53	66-176 9-143 39-113		
Detensioning and material tests	97	88-154			42	19-133	20	66-176		

*Hoop tendon
**Inverted U tendon

	TENDON NUMBERS									
Years After Initial Structural Integrity Test (12/3/1980)	20		25		30		35		40	
Type of Examination	H	U	H	U	H	U	H	U	H	U
Visual examination of End Anchorages and adjacent concrete surface	75 86 9 *13	86-156 9-143 43-109	12 90 25 *13	24-128 70-172 76-166	58 86 31 *13	9-143 64-178 34-118	81 109 28 *13	41-111 90-152 50-102	23 97 86 *13	9-143 86-156 2-60
Prestress monitoring tests	75 86 9	86-156 9-143 43-109			58 86 31	34-118 9-143 64-178			23 97 86	2-60 9-143 86-156
Detensioning and material tests	75	43-109			31	64-178			86	9-143

***NCR 971001038 and 010400658 requires tendon #13 to be visually examined during the performance of each of the remaining surveillances to document any further degradation.**

TENDON SURVEILLANCE - UNIT 3

	TENDON NUMBERS									
Years After Initial Structural Integrity Test (4/3/1982)	1		3		5		10		15	
Type of Examination	H*	U**	H	U	H	U	H	U	H	U
Visual examination of End Anchorages and adjacent concrete surface	53 64 9 97 86	66-176 88-154 9-143 39-113	7 38 80 94 85	23-129 47-105 69-173 83-159	31 64 108 75 20	19-133 88-154 31-121 65-177	49 111 2	11-141 7-55 76-166	42 64 97	95-147 88-154 43-109
Prestress monitoring tests	53 64 9 97 86	66-176 88-154 9-143 39-113			31 64 108 75 20	19-133 88-154 31-121 65-177			42 64 97	95-147 88-154 43-109
Detensioning and material tests	53	66-176			31	19-133			97	95-147

*Horizontal (Hoop) tendon
**Vertical (Inverted U) tendon

	TENDON NUMBERS									
Years After Initial Structural Integrity Test (4/3/1982)	20		25		30		35		40	
Type of Examination	H	U	H	U	H	U	H	U	H	U
Visual examination of End Anchorages and adjacent concrete surface	10 87 4	25-127 71-171 31-121	28 64 9	39-113 88-154 16-136	84 106 24	42-110 91-151 35-117	64 16 86	88-154 31-121 1-61	4 88 32	51-101 97-145 50-102
Prestress monitoring tests			28 64 9	39-113 88-154 16-136			64 16 86	88-154 31-121 1-61		
Detensioning and material tests			9	39-113			64	88-154		

TENDON LIFT-OFF FORCE - UNIT 2

HORIZONTAL TENDONS

TENDON NO.	TYPE	END		YEARS					
				1	5	10	20	30	40
8	J	1	Max.		1586		1572		
			Min.		1399		1377		
		3	Max.		1549		1535		
			Min		1366		1344		
9	S	2	Max.		1509		1493		
			Min.		1322		1300		
		3	Max.		1484		1469		
			Min		1306		1287		
10	J	1	Max.		1560		1546		
			Min.		1376		1354		
		2	Max.		1517		1503		
			Min		1338		1316		
19	J	1	Max.	1566		1542			
			Min.	1390		1355			
		2	Max.	1560		1536			
			Min	1385		1350			
20	S	1	Max.	1569		1541			
			Min.	1383		1344			
		3	Max.	1527		1501			
			Min	1348		1312			
21	J	2	Max.	1577		1553			
			Min.	1400		1363			
		3	Max.	1507		1483			
			Min.	1338		1303			

J= Tendon Adjacent to Inspected Tendon
S= Inspected Tendon (Surveillance)
N/A= No Adjacent Tendon

TENDON LIFT-OFF FORCE - UNIT 2

HORIZONTAL TENDONS

TENDON NO.	TYPE	END		YEARS					
				1	5	10	20	30	40
22	J	1	Max.						1517
			Min.						1325
		2	Max.						1500
			Min.						1310
23	S	1	Max.						1554
			Min.						1358
		3	Max.						1499
			Min.						1309
24	J	2	Max.						1570
			Min.						1372
		3	Max.						1490
			Min.						1301
30	J	2	Max.					1573	
			Min.					1376	
		3	Max.					1494	
			Min.					1305	
31	S	1	Max.					1409	
			Min.					1234	
		2	Max.					1466	
			Min.					1281	
32	J	1	Max.					1516	
			Min.					1325	
		3	Max.					1523	
			Min.					1331	

J= Tendon Adjacent to Inspected Tendon
S= Inspected Tendon (Surveillance)
N/A= No Adjacent Tendon

TENDON LIFT-OFF FORCE - UNIT 2

HORIZONTAL TENDONS

TENDON NO.	TYPE	END		YEARS					
				1	5	10	20	30	40
41	J	1	Max.		1576				
			Min.		1390				
		3	Max.		1552				
			Min.		1369				
42	S	2	Max.		1559				
			Min.		1373				
		3	Max.		1532				
			Min.		1363				
43	J	1	Max.		1571				
			Min.		1385				
		2	Max.		1543				
			Min.		1361				
52	J	1	Max.	1544		1520			
			Min.	1371		1336			
		2	Max.	1539		1515			
			Min.	1366		1331			
53	S	1	Max.	1597		1571			
			Min.	1416		1380			
		3	Max.	1564		1538			
			Min.	1390		1355			
54	J	2	Max.	1619		1595			
			Min.	1437		1402			
		3	Max.	1544		1520			
			Min.	1371		1336			

J= Tendon Adjacent to Inspected Tendon
S= Inspected Tendon (Surveillance)
N/A= No Adjacent Tendon

TENDON LIFT-OFF FORCE - UNIT 2

HORIZONTAL TENDONS

TENDON NO.	TYPE	END		YEARS					
				1	5	10	20	30	40
57	J	2	Max.					1552	
			Min.					1357	
		3	Max.					1504	
			Min.					1315	
58	S	1	Max.					1541	
			Min.					1348	
		2	Max.					1482	
			Min.					1295	
59	J	1	Max.					1568	
			Min.					1371	
		2	Max.					1502	
			Min.					1313	
63	J	2	Max.	1545					
			Min.	1372					
		3	Max.	1518					
			Min.	1348					
64	S	1	Max.	1607					
			Min.	1426					
		2	Max.	1570					
			Min.	1396					
65	J	1	Max.	1593					
			Min.	1414					
		3	Max.	1569					
			Min.	1393					

J= Tendon Adjacent to Inspected Tendon
S= Inspected Tendon (Surveillance)
N/A= No Adjacent Tendon

TENDON LIFT-OFF FORCE - UNIT 2

HORIZONTAL TENDONS

TENDON NO.	TYPE	END		YEARS					
				1	5	10	20	30	40
74	J	1	Max.		1586		1572		
			Min.		1399		1377		
		3	Max.		1531		1517		
			Min.		1351		1329		
75	S	2	Max.		1535		1519		
			Min.		1349		1327		
		3	Max.		1508		1493		
			Min.		1339		1312		
76	J	1	Max.		1517		1503		
			Min.		1338		1316		
		2	Max.		1511		1497		
			Min.		1332		1310		
85	J	1	Max.	1577	1560	1553	1546	1542	1539
			Min.	1400	1376	1365	1354	1348	1344
		2	Max.	1539	1522	1515	1508	1504	1501
			Min.	1366	1342	1331	1320	1314	1310
86	S	1	Max.	1600	1585	1579	1572	1569	1566
			Min.	1423	1401	1392	1382	1377	1373
		3	Max.	1527	1513	1506	1500	1497	1494
			Min.	1362	1342	1333	1324	1319	1315
87	J	2	Max.	1608	1591	1584	1577	1573	1570
			Min.	1428	1404	1393	1382	1376	1372
		3	Max.	1529	1512	1505	1498	1494	1491
			Min.	1357	1333	1322	1311	1305	1301

J= Tendon Adjacent to Inspected Tendon
S= Inspected Tendon (Surveillance)
N/A= No Adjacent Tendon

TENDON LIFT-OFF FORCE - UNIT 2

HORIZONTAL TENDONS

TENDON NO.	TYPE	END		YEARS					
				1	5	10	20	30	40
96	J	2	Max.	1598					1560
			Min.	1419					1363
		3	Max.	1549					1511
			Min.	1375					1319
97	S	1	Max.	1563					1530
			Min.	1393					1346
		2	Max.	1546					1515
			Min.	1380					1333
98	J	1	Max.	1603					1565
			Min.	1423					1367
		3	Max.	1527					1489
			Min.	1355					1299
107	J	1	Max.		1586				
			Min.		1399				
		3	Max.		1563				
			Min.		1378				
108	S	2	Max.		1611				
			Min.		1429				
		3	Max.		1573				
			Min.		1398				
109	J	1	Max.		1538				
			Min.		1357				
		2	Max.		1522				
			Min.		1342				

J= Tendon Adjacent to Inspected Tendon
S= Inspected Tendon (Surveillance)
N/A= No Adjacent Tendon

TENDON LIFT-OFF FORCE - UNIT 2

VERTICAL TENDONS

TENDON NO.	TYPE	END		YEARS					
				1	5	10	20	30	40
1-61	J	A	Max.						1593
			Min.						1398
		B	Max.						1558
			Min.						1367
2-60	S	A	Max.						1560
			Min.						1369
		B	Max.						1515
			Min.						1329
3-59	J	A	Max.						1568
			Min.						1376
		B	Max.						1578
			Min.						1385
N/A	J	A	Max.						
			Min.						
		B	Max.						
			Min.						
9-143	S	A	Max.	1618	1603	1596	1590	1586	1583
			Min.	1444	1422	1413	1403	1398	1394
		B	Max.	1598	1584	1577	1571	1568	1565
			Min.	1428	1407	1398	1389	1384	1380
10-142	J	A	Max.	1590	1576	1570	1564	1560	1558
			Min.	1415	1394	1385	1376	1371	1367
		B	Max.	1590	1576	1570	1564	1560	1558
			Min.	1415	1394	1385	1376	1371	1367

J= Tendon Adjacent to Inspected Tendon
S= Inspected Tendon (Surveillance)
N/A= No Adjacent Tendon

TENDON LIFT-OFF FORCE - UNIT 2

VERTICAL TENDONS

TENDON NO.	TYPE	END		YEARS					
				1	5	10	20	30	40
18-134	J	A	Max.		1576				
			Min.		1394				
		B	Max.		1598				
			Min.		1414				
19-133	S	A	Max.		1628				
			Min.		1443				
		B	Max.		1579				
			Min.		1402				
20-132	J	A	Max.		1611				
			Min.		1432				
		B	Max.		1576				
			Min.		1425				
30-122	J	A	Max.	1600					
			Min.	1424					
		B	Max.	1602					
			Min.	1426					
31-121	S	A	Max.	1574					
			Min.	1406					
		B	Max.	1586					
			Min.	1415					
32-120	J	A	Max.	1651					
			Min.	1469					
		B	Max.	1613					
			Min.	1436					

J= Tendon Adjacent to Inspected Tendon
S= Inspected Tendon (Surveillance)
N/A= No Adjacent Tendon

TENDON LIFT-OFF FORCE - UNIT 2

VERTICAL TENDONS

TENDON NO.	TYPE	END		YEARS					
				1	5	10	20	30	40
33-119	J	A	Max.					1550	
			Min.					1362	
		B	Max.					1562	
			Min.					1373	
34-118	S	A	Max.					1582	
			Min.					1391	
		B	Max.					1560	
			Min.					1371	
35-117	J	A	Max.					1571	
			Min.					1381	
		B	Max.					1551	
			Min.					1363	
38-114	J	A	Max.			1592			
			Min.			1405			
		B	Max.			1580			
			Min.			1394			
39-113	S	A	Max.			1603			
			Min.			1417			
		B	Max.			1581			
			Min.			1398			
40-112	J	A	Max.			1605			
			Min.			1416			
		B	Max.			1570			
			Min.			1385			

J= Tendon Adjacent to Inspected Tendon
S= Inspected Tendon (Surveillance)
N/A= No Adjacent Tendon

TENDON LIFT-OFF FORCE - UNIT 2

VERTICAL TENDONS

TENDON NO.	TYPE	END		YEARS					
				1	5	10	20	30	40
42-110	J	A	Max.				1599		
			Min.				1407		
		B	Max.				1587		
			Min.				1397		
43-109	S	A	Max.				1606		
			Min.				1416		
		B	Max.				1577		
			Min.				1392		
44-108	J	A	Max.				1599		
			Min.				1407		
		B	Max.				1564		
			Min.				1376		
63-179	J	A	Max.		1576			1560	
			Min.		1394			1371	
		B	Max.		1536			1520	
			Min.		1359			1336	
64-178	S	A	Max.		1546			1530	
			Min.		1373			1351	
		B	Max.		1568			1552	
			Min.		1392			1370	
65-177	J	A	Max.		1586			1570	
			Min.		1403			1380	
		B	Max.		1598			1582	
			Min.		1414			1391	

J= Tendon Adjacent to Inspected Tendon
S= Inspected Tendon (Surveillance)
N/A= No Adjacent Tendon

TENDON LIFT-OFF FORCE - UNIT 2

VERTICAL TENDONS

TENDON NO.	TYPE	END		YEARS					
				1	5	10	20	30	40
65-177	J	A	Max.	1600		1580			
			Min.	1424		1394			
		B	Max.	1612		1592			
			Min.	1435		1405			
66-176	S	A	Max.	1577		1556			
			Min.	1407		1377			
		B	Max.	1579		1559			
			Min.	1409		1379			
67-175	J	A	Max.	1590		1570			
			Min.	1415		1385			
		B	Max.	1590		1570			
			Min.	1415		1385			
85-157	J	A	Max.				1614		1608
			Min.				1421		1412
		B	Max.				1586		1580
			Min.				1396		1387
86-156	S	A	Max.				1540		1534
			Min.				1361		1352
		B	Max.				1543		1537
			Min.				1362		1353
87-155	J	A	Max.				1574		1568
			Min.				1385		1387
		B	Max.				1574		1568
			Min.				1385		1376

J= Tendon Adjacent to Inspected Tendon
S= Inspected Tendon (Surveillance)
N/A= No Adjacent Tendon

TENDON LIFT-OFF FORCE - UNIT 2

VERTICAL TENDONS

TENDON NO.	TYPE	END		YEARS					
				1	5	10	20	30	40
87-155	J	A	Max.	1600					
			Min.	1424					
		B	Max.	1600					
			Min.	1424					
88-154	S	A	Max.	1588					
			Min.	1415					
		B	Max.	1568					
			Min.	1399					
89-153	J	A	Max.	1680					
			Min.	1495					
		B	Max.	1600					
			Min.	1424					
93-149	J	A	Max.		1576				
			Min.		1394				
		B	Max.		1576				
			Min.		1394				
94-148	S	A	Max.		1546				
			Min.		1374				
		B	Max.		1556				
			Min.		1383				
95-147	J	A	Max.		1546				
			Min.		1367				
		B	Max.		1576				
			Min.		1394				

J= Tendon Adjacent to Inspected Tendon
S= Inspected Tendon (Surveillance)
N/A= No Adjacent Tendon

TENDON LIFT-OFF FORCE - UNIT 3

HORIZONTAL TENDONS

TENDON NO.	TYPE	END		YEARS				
				1	5	15	25	35
8	J	1	Max.	1598			1563	
			Min.	1419			1370	
		3	Max.	1601			1566	
			Min.	1422			1373	
9	S	2	Max.	1486			1451	
			Min.	1314			1265	
		3	Max.	1513			1477	
			Min.	1337			1286	
10	J	2	Max.	1603			1568	
			Min.	1423			1374	
		1	Max.	1544			1509	
			Min.	1370			1321	
15	J	2	Max.					1477
			Min.					1292
		3	Max.					1502
			Min.					1314
16	S	1	Max.					1499
			Min.					1311
		2	Max.					1574
			Min.					1378
17	J	1	Max.					1426
			Min.					1247
		3	Max.					1386
			Min.					1211

J= Tendon Adjacent to Inspected Tendon
S= Inspected Tendon (Surveillance)
N/A= No Adjacent Tendon

TENDON LIFT-OFF FORCE - UNIT 3

HORIZONTAL TENDONS

TENDON NO.	TYPE	END		YEARS				
				1	5	15	25	35
19	J	2	Max.		1533			
			Min.		1352			
		1	Max.		1516			
			Min.		1337			
20	S	1	Max.		1563			
			Min.		1366			
		3	Max.		1521			
			Min.		1333			
21	J	3	Max.		1524			
			Min.		1344			
		2	Max.		1552			
			Min.		1369			
27	J	2	Max.				1545	
			Min.				1353	
		3	Max.				1515	
			Min.				1327	
28	S	1	Max.				1508	
			Min.				1321	
		2	Max.				1557	
			Min.				1365	
29	J	1	Max.				1478	
			Min.				1294	
		3	Max.				1539	
			Min.				1348	

J= Tendon Adjacent to Inspected Tendon
S= Inspected Tendon (Surveillance)
N/A= No Adjacent Tendon

TENDON LIFT-OFF FORCE - UNIT 3

HORIZONTAL TENDONS

TENDON NO.	TYPE	END		YEARS				
				1	5	15	25	35
30	J	3	Max.		1566			
			Min.		1381			
		2	Max.		1563			
			Min.		1378			
31	S	1	Max.		1481			
			Min.		1302			
		2	Max.		1560			
			Min.		1364			
32	J	1	Max.		1539			
			Min.		1358			
		3	Max.		1563			
			Min.		1378			
41	J	1	Max.			1501		
			Min.			1317		
		3	Max.			1529		
			Min.			1342		
42	S	2	Max.			1557		
			Min.			1365		
		3	Max.			1550		
			Min.			1359		
43	J	2	Max.			1564		
			Min.			1373		
		1	Max.			1493		
			Min.			1310		

J= Tendon Adjacent to Inspected Tendon
S= Inspected Tendon (Surveillance)
N/A= No Adjacent Tendon

TENDON LIFT-OFF FORCE - UNIT 3

HORIZONTAL TENDONS

TENDON NO.	TYPE	END		YEARS				
				1	5	15	25	35
52	J	2	Max.	1571				
			Min.	1395				
		1	Max.	1533				
			Min.	1361				
53	S	1	Max.	1602				
			Min.	1421				
		3	Max.	1610				
			Min.	1428				
54	J	3	Max.	1530				
			Min.	1358				
		2	Max.	1601				
			Min.	1422				
63	J	3	Max.	1550	1533	1521	1515	1511
			Min.	1376	1352	1335	1327	1322
		2	Max.	1569	1552	1540	1534	1530
			Min.	1393	1369	1352	1344	1339
64	S	1	Max.	1564	1547	1535	1530	1526
			Min.	1391	1366	1349	1341	1336
		2	Max.	1623	1604	1591	1585	1581
			Min.	1438	1412	1394	1386	1380
65	J	1	Max.	1581	1574	1569	1563	1559
			Min.	1419	1395	1378	1370	1365
		3	Max.	1588	1557	1545	1539	1535
			Min.	1397	1373	1356	1348	1343

J= Tendon Adjacent to Inspected Tendon
S= Inspected Tendon (Surveillance)
N/A= No Adjacent Tendon

TENDON LIFT-OFF FORCE - UNIT 3

HORIZONTAL TENDONS

TENDON NO.	TYPE	END		YEARS				
				1	5	15	25	35
74	J	1	Max.		1571			
			Min.		1385			
		3	Max.		1536			
			Min.		1355			
75	S	2	Max.		1558			
			Min.		1368			
		3	Max.		1530			
			Min.		1347			
76	J	2	Max.		1563			
			Min.		1378			
		1	Max.		1554			
			Min.		1371			
85	J	1	Max.	1582				1543
			Min.	1404				1350
		2	Max.	1544				1505
			Min.	1370				1316
86	S	1	Max.	1533				1503
			Min.	1367				1324
		3	Max.	1592				1559
			Min.	1416				1368
87	J	3	Max.	1541				1502
			Min.	1368				1314
		2	Max.	1601				1562
			Min.	1422				1368

J= Tendon Adjacent to Inspected Tendon
S= Inspected Tendon (Surveillance)
N/A= No Adjacent Tendon

TENDON LIFT-OFF FORCE - UNIT 3

HORIZONTAL TENDONS

TENDON NO.	TYPE	END		YEARS				
				1	5	15	25	35
96	J	2	Max.	1564		1535		
			Min.	1389		1348		
		3	Max.	1554		1525		
			Min.	1380		1339		
97	S	1	Max.	1551		1527		
			Min.	1384		1350		
		2	Max.	1599		1574		
			Min.	1424		1387		
98	J	1	Max.	1567		1538		
			Min.	1391		1350		
		3	Max.	1585		1556		
			Min.	1407		1366		
107	J	1	Max.		1565			
			Min.		1380			
		3	Max.		1589			
			Min.		1402			
108	S	2	Max.		1589			
			Min.		1411			
		3	Max.		1609			
			Min.		1428			
109	J	2	Max.		1576			
			Min.		1390			
		1	Max.		1542			
			Min.		1360			

J= Tendon Adjacent to Inspected Tendon
S= Inspected Tendon (Surveillance)
N/A= No Adjacent Tendon

TENDON LIFT-OFF FORCE - UNIT 3

VERTICAL TENDONS

TENDON NO.	TYPE	END		YEARS				
				1	5	15	25	35
N/A	J	A	Max.					
			Min.					
		B	Max.					
			Min.					
9-143	S	A	Max.	1651				
			Min.	1472				
		B	Max.	1633				
			Min.	1457				
10-142	J	A	Max.	1590				
			Min.	1415				
		B	Max.	1631				
			Min.	1451				
15-135	J	A	Max.				1589	
			Min.				1398	
		B	Max.				1594	
			Min.				1403	
16-136	S	A	Max.				1581	
			Min.				1391	
		B	Max.				1589	
			Min.				1398	
17-137	J	A	Max.				1611	
			Min.				1418	
		B	Max.				1605	
			Min.				1412	

J= Tendon Adjacent to Inspected Tendon
S= Inspected Tendon (Surveillance)
N/A= No Adjacent Tendon

TENDON LIFT-OFF FORCE - UNIT 3

VERTICAL TENDONS

TENDON NO.	TYPE	END		YEARS				
				1	5	15	25	35
18-134	J	A	Max.		1608			
			Min.		1422			
		B	Max.		1627			
			Min.		1439			
19-133	S	A	Max.		1635			
			Min.		1448			
		B	Max.		1619			
			Min.		1436			
20-132	J	A	Max.		1619			
			Min.		1432			
		B	Max.		1616			
			Min.		1430			
30-122	J	A	Max.		1608			1589
			Min.		1422			1396
		B	Max.		1605			1586
			Min.		1420			1394
31-121	S	A	Max.		1608			1590
			Min.		1425			1398
		B	Max.		1622			1603
			Min.		1436			1409
32-120	J	A	Max.		1608			1589
			Min.		1422			1396
		B	Max.		1627			1608
			Min.		1439			1413

J= Tendon Adjacent to Inspected Tendon
S= Inspected Tendon (Surveillance)
N/A= No Adjacent Tendon

TENDON LIFT-OFF FORCE - UNIT 3

VERTICAL TENDONS

TENDON NO.	TYPE	END		YEARS				
				1	5	15	25	35
38-114	J	A	Max.	1623			1592	
			Min.	1444			1401	
		B	Max.	1631			1600	
			Min.	1452			1409	
39-113	S	A	Max.	1639			1608	
			Min.	1460			1416	
		B	Max.	1633			1603	
			Min.	1456			1412	
40-112	J	A	Max.	1612			1581	
			Min.	1435			1392	
		B	Max.	1620			1589	
			Min.	1442			1399	
42-110	J	A	Max.			1586		
			Min.			1399		
		B	Max.			1605		
			Min.			1415		
43-109	S	A	Max.			1614		
			Min.			1424		
		B	Max.			1609		
			Min.			1421		
44-108	J	A	Max.			1597		
			Min.			1408		
		B	Max.			1583		
			Min.			1396		

J= Tendon Adjacent to Inspected Tendon
S= Inspected Tendon (Surveillance)
N/A= No Adjacent Tendon

TENDON LIFT-OFF FORCE - UNIT 3

VERTICAL TENDONS

TENDON NO.	TYPE	END		YEARS				
				1	5	15	25	35
62-180	J	A	Max.					1565
			Min.					1375
		B	Max.					1602
			Min.					1408
1-61	S	A	Max.					1586
			Min.					1394
		B	Max.					1600
			Min.					1407
2-60	J	A	Max.					1602
			Min.					1408
		B	Max.					1575
			Min.					1384
64-178	J	A	Max.		1578			
			Min.		1396			
		B	Max.		1577			
			Min.		1395			
65-177	S	A	Max.		1557			
			Min.		1380			
		B	Max.		1565			
			Min.		1387			
66-176	J	A	Max.		1587			
			Min.		1406			
		B	Max.		1576			
			Min.		1396			

J= Tendon Adjacent to Inspected Tendon
S= Inspected Tendon (Surveillance)
N/A= No Adjacent Tendon

TENDON LIFT-OFF FORCE - UNIT 3

VERTICAL TENDONS

TENDON NO.	TYPE	END		YEARS				
				1	5	15	25	35
65-177	J	A	Max.	1571				
			Min.	1401				
		B	Max.	1580				
			Min.	1409				
66-176	S	A	Max.	1602				
			Min.	1428				
		B	Max.	1590				
			Min.	1417				
67-175	J	A	Max.	1612				
			Min.	1435				
		B	Max.	1631				
			Min.	1451				
87-155	J	A	Max.	1623	1608	1597	1592	1589
			Min.	1444	1422	1408	1401	1396
		B	Max.	1653	1638	1627	1622	1619
			Min.	1471	1449	1435	1428	1423
88-154	S	A	Max.	1596	1581	1570	1566	1562
			Min.	1422	1401	1387	1380	1376
		B	Max.	1625	1611	1602	1598	1595
			Min.	1460	1440	1426	1419	1415
89-153	J	A	Max.	1655	1640	1629	1624	1621
			Min.	1473	1451	1437	1430	1425
		B	Max.	1631	1616	1605	1600	1597
			Min.	1452	1430	1415	1409	1404

J= Tendon Adjacent to Inspected Tendon
S= Inspected Tendon (Surveillance)
N/A= No Adjacent Tendon

TENDON LIFT-OFF FORCE - UNIT 3

VERTICAL TENDONS

TENDON NO.	TYPE	END		YEARS				
				1	5	15	25	35
94-148	J	A	Max.			1583		
			Min.			1396		
		B	Max.			1599		
			Min.			1410		
95-147	S	A	Max.			1600		
			Min.			1410		
		B	Max.			1588		
			Min.			1400		
96-146	J	A	Max.			1573		
			Min.			1387		
		B	Max.			1610		
			Min.			1420		

J= Tendon Adjacent to Inspected Tendon
S= Inspected Tendon (Surveillance)
N/A= No Adjacent Tendon

HORIZONTAL AND VERTICAL TENDONS DUCT LENGTH - UNITS 2 AND 3

HORIZONTAL TENDONS

End Number	to	End Number	Length (in feet)
1-1		1-2	343.7
2-1		2-3	344.2
3-3		3-2	344.0
4-2		4-1	344.0
5-1		5-3	344.5
6-3		6-2	344.4
7-2		7-1	344.2
8-1		8-3	345.5
9-3		9-2	345.7
10-2		10-1	343.9
11-1		11-3	346.4
12-3		12-2	347.4
13-2		13-1	345.2
14-1		14-3	347.7
15-3		15-2	346.8
16-2		16-1	344.6
17-1		17-3	346.7
18-3		18-2	346.1
19-2		19-1	344.1
20-1		20-3	345.9
21-3		21-2	345.6
22-2		22-1	343.8
23-1		23-3	345.4
24-3		24-2	345.2
25-2		25-1	343.6
26-1		26-3	345.1
27-3		27-2	344.5
28-2		28-1	343.5
29-1		29-3	344.4
30-3		30-2	344.3
31-2		31-1	343.4
32-1		32-3	344.6
33-3		33-2	344.3
34-2		34-1	343.6
35-1		35-3	344.5
36-3		36-2	344.4
37-2		37-1	343.4
38-1		38-3	344.6
39-3		39-2	344.6
40-2		40-1	343.4
41-1		41-3	344.7
42-3		42-2	344.9
43-2		43-1	343.5
44-1		44-3	344.2
45-3		45-2	344.0
46-2		46-1	343.7

NOTES 1) Tendon Duct Length is obtained from Drawing S023-204-3-133
2) End Number = (Tendon Number - Buttress Number)

HORIZONTAL AND VERTICAL TENDONS DUCT LENGTH - UNITS 2 AND 3

HORIZONTAL TENDONS

End Number	to	End Number	Length (in feet)
47-1		47-2	344.0
48-3		48-2	343.7
49-2		49-1	343.4
50-1		50-3	343.6
51-3		51-2	343.6
52-2		52-1	343.4
53-1		53-3	344.1
54-3		54-2	343.5
55-2		55-1	344.0
56-1		56-3	344.0
57-3		57-2	343.4
58-2		58-1	344.2
59-1		59-3	343.7
60-3		60-2	343.4
61-2		61-1	343.6
62-1		62-3	343.6
63-3		63-2	343.4
64-2		64-1	343.5
65-1		65-3	343.5
66-3		66-2	343.4
67-2		67-1	343.4
68-1		68-3	343.4
69-3		69-2	343.4
70-2		70-1	343.4
71-1		71-3	343.4
72-3		72-2	343.4
73-2		73-1	343.4
74-1		74-3	343.4
75-3		75-2	343.4
76-2		76-1	343.4
77-1		77-3	343.4
78-3		78-2	343.4
79-2		79-1	343.4
80-1		80-3	343.4
81-3		81-2	343.4
82-2		82-1	343.4
83-1		83-3	343.4
84-3		84-2	343.4
85-2		85-1	341.9
86-1		86-3	341.7
87-3		87-2	341.3
88-2		88-1	340.6
89-1		89-3	339.7
90-3		90-2	338.6
91-2		91-1	337.3
92-1		92-3	335.7

NOTES: 1) Tendon Duct Length is obtained from Drawing S023-204-3-133
2) End Number = (Tendon Number - Buttress Number)

HORIZONTAL AND VERTICAL TENDONS DUCT LENGTH - UNITS 2 AND 3

HORIZONTAL TENDONS

End Number	to	End Number	Length (in feet)
93-3		93-2	334.0
94-2		94-1	332.0
95-1		95-3	329.8
96-3		96-2	327.4
97-2		97-1	324.6
98-1		98-3	322.0
99-3		99-2	318.9
100-2		100-1	315.7
101-1		101-3	312.3
102-3		102-2	308.7
103-2		103-1	304.6
104-1		104-3	300.8
105-3		105-2	296.6
106-2		106-1	292.2
107-1		107-3	287.6
108-3		108-2	282.8
109-2		109-1	277.7
110-1		110-3	272.2
111-3		111-2	267.5
112-2		112-1	262.0
113-1		113-3	256.4
114-3		114-2	250.6

NOTES: 1) Tendon Duct Length is obtained from Drawing SO23-204-3-133

2) End Number = (Tendon Number - Buttress Number)

HORIZONTAL AND VERTICAL TENDONS DUCT LENGTH - UNITS 2 AND 3

VERTICAL TENDONS

End Number	to	End Number	Length (in feet)
1		61	423.4
2		60	419.0
3		59	414.4
4		58	409.6
5		57	404.8
6		56	399.5
7		55	393.6
8		54	387.9
9		143	386.7
10		142	392.5
11		141	398.7
12		140	403.4
13		139	408.3
14		138	413.1
15		137	417.7
16		136	422.0
17		135	426.1
18		134	429.9
19		133	433.5
20		132	436.8
21		131	439.8
22		130	442.5
23		129	445.0
24		128	447.2
25		127	449.5
26		126	451.1
27		125	452.4
28		124	453.0
29		123	453.7
30		122	454.2
31		121	454.3
32		120	454.2
33		119	453.7
34		118	453.0
35		117	452.0
36		116	450.7
37		115	449.1
38		114	447.2
39		113	444.9
40		112	442.5
41		111	439.8
42		110	436.8
43		109	433.5
44		108	429.9
45		107	426.1

NOTE: Tendon Duct Length is obtained from Drawing S023-204-3-133

HORIZONTAL AND VERTICAL TENDONS DUCT LENGTH - UNITS 2 AND 3

VERTICAL TENDONS

End Number	to	End Number	Length (in feet)
46		106	422.0
47		105	417.7
48		104	413.2
49		103	408.4
50		102	403.8
51		101	396.5
52		100	393.0
53		99	386.7
62		180	427.5
63		179	431.4
64		178	434.9
65		177	438.3
66		176	441.3
67		175	444.0
68		174	445.5
69		173	448.7
70		172	450.6
71		171	453.3
72		170	454.6
73		169	457.4
74		168	458.2
75		167	458.6
76		166	457.4
77		165	456.0
78		164	455.5
79		163	454.6
80		162	454.0
81		161	452.7
82		160	450.6
83		159	448.7
84		158	446.5
85		157	444.2
86		156	441.5
87		155	438.4
88		154	435.0
89		153	431.4
90		152	427.6
91		151	423.6
92		150	419.0
93		149	414.4
94		148	409.6
95		147	404.5
96		146	399.1
97		145	393.6
98		144	387.9

NOTE: Tendon Duct Length is obtained from Drawing S023-204-3-133.

SHEATHING FILLER REMOVAL AND INSTALLATION

PREREQUISITES MET: **VERIFIED BY:** _____ _____
RESPONSIBLE WORK ORGANIZATION DATE

TENDON IDENTIFICATION

(1) TENDON NUMBER					
(2) TENDON END LOCATION					
(3) CAL. DUE DATES & ID	THERMOMETER	ID-	DUE	PRESSURE GAUGE	ID- DUE

FILLER REMOVAL

(4) DATE REMOVAL STARTED	
(5) CONTAINMENT EXTERIOR CONCRETE TEMPERATURE NEAR TENDON ANCHORAGE (°F)	
(6) TOTAL VOLUME REMOVED (GAL.)	
(7) SAMPLE TAKEN YES/NO (Circle One)	
(8) CHANGE IN APPEARANCE OF FILLER YES/NO (Circle One)	

GREASE CAP

(9) DATE REMOVED	
(10) DATE REINSTALLED	

COMMENTS: _____

FILLER INSTALLATION

(11) DATE INSTALLED	
(12) CONTAINMENT EXTERIOR CONCRETE TEMPERATURE NEAR TENDON ANCHORAGE (°F)	
(13) FILLER TEMPERATURE AT PUMP (°F)	
(14) FILLER TEMPERATURE AT OUTLET CAP (°F)	
(15) TOTAL VOLUME INSTALLED (GAL.)	
(16) INSTALLATION PRESSURE (PSI)	

RECORDED BY _____ DATE _____
Examiner

REVIEWED BY _____ DATE _____
Registered Professional Engineer

APPROVED BY _____ DATE _____
Supervisor, Design Engineering or designee

REVIEWED BY _____ DATE _____
ANII

SHEATHING FILLER REMOVAL AND INSTALLATION

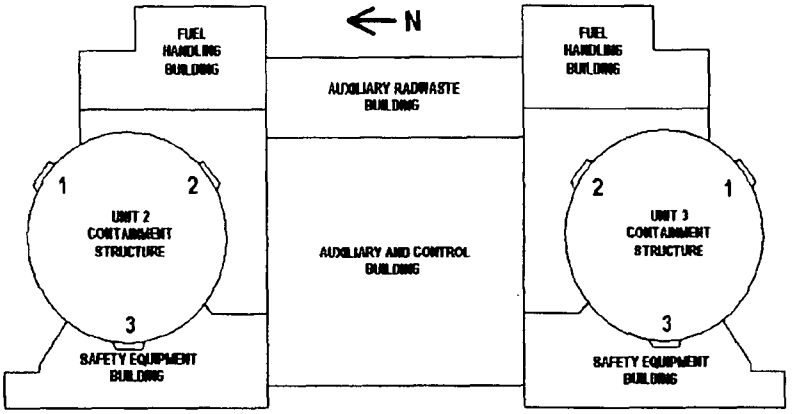

(17) UNIT	
(18) SURV. YEAR	
(19) TENDON NO.	
(20) END	
(21) LENGTH (ATT. #3)	
(22) SURV. TENDON?	Y / N
(23) REPLACE VALVE?	Y / N
(24) SCALE ID#	
(25) CALIB. DUE DATE	

REMOVAL

(26) EMPTY SAMPLE BOTTLE WT.	
(27) FILLED BOTTLE WT.	
(28) NET SAMPLE WT. (LINE 27-26)	
(29) EMPTY CONTAINER + RAG WT.	
(30) CONTAINER + GREASE + RAG WT.	
(31) NET GREASE WT. (LINE 30–29)	
(32) TOTAL GREASE WT. (LINE 28+ 31)	
(33) VOLUME REMOVED = TOTAL WT. ÷ 7.4 LBS./ GAL.	

INSTALLATION

(17) DIAMETER OF BARREL (IN.)	
(18) GREASE START LEVEL (IN.)	
(19) GREASE FINISH LEVEL (IN.)	
(20) HEIGHT CHANGE (LINE 18 – 19)	
(21) GALLONS PUMPED INTO TENDON = HEIGHT CHANGE x 1.7 GAL/ IN.	
(22) GALLONS VENTED	
(23) VOLUME ADDED (LINE 21 – 22)	
(24) ADJUSTED VOLUME ADDED (IF STRAND REMOVED)	
(24) END VOID RATIO %	

END VOID RATIO %

Standard Tendon:

$$\frac{\text{(Volume Added – Volume Removed)} \times 100\%}{\tfrac{1}{2}\text{ Tendon Length} \times 0.912\text{ gal/ft} + 14.8\text{ gal.}}$$

Removed Strand Correction

$V_{(add)} = V_{(add)} - 0.0079$ gal/ft x ½ Tendon Length

Surveillance Tendon:

$$\frac{\text{(Volume Added – Volume Removed)} \times 100\%}{\tfrac{1}{2}\text{ Tendon Length} \times 0.912\text{ gal/ft} + 24.3\text{ gal.}}$$

RECORDED BY _____ DATE_____
Examiner

REVIEWED BY _____ DATE_____
Registered Professional Engineer

APPROVED BY _____ DATE_____
Supervisor, Design Engineering or Designee

REVIEWED BY _____ DATE_____
ANII

ANCHORAGE ASSEMBLY VISUAL EXAMINATION
(VT-1)

PREREQUISITES MET: **VERIFIED BY:** _____ _____
RESPONSIBLE WORK ORGANIZATION DATE

Legend for Strands

- • Strand Removed Previously
- ▌ Strand Removed This Surveillance for Examination
- Ø Discontinuous Strand Removed This Surveillance

Tendon No. _____
Location(s) _____

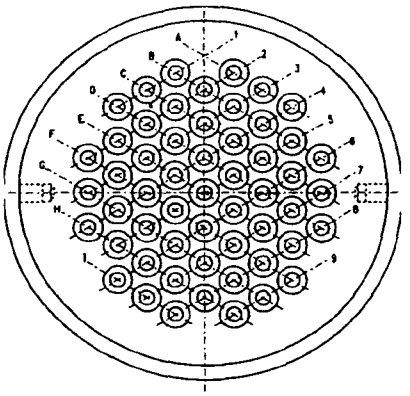

CORROSION LEVEL

#1 NO VISIBLE OXIDATION
#2 VISIBLE OXIDATION, NO PITTING
#3 0" PITTING < .003"
#4 .003" < PITTING < .006"
#5 .006" < PITTING < .010"

	Anchorhead	Shims	Bearing Plate	Wedges	Tendon Strands	Trumpet
CORROSION LEVEL						
COMPLETE GREASE COVERAGE (Y/N)						

EXAMINATION OF ADJACENT CONCRETE SURFACES (VT-1C)_____

COMMENTS (Broken or missing wires; and breakage cause; NCR's written) _____

_____

_____

RECORDED BY _____ DATE _____
Examiner

REVIEWED BY _____ DATE _____
Registered Professional Engineer

APPROVED BY _____ DATE _____
Supervisor, Design Engineering or designee

REVIEWED BY _____ DATE _____
ANII

DETENSIONING AND RETENSION DATA

(1) Tendon No.	_____	(2) Location	_____
(3) Hydraulic Ram ID.	_____	(4) Gauge ID.	_____
(5) Prerequisites Verified By: _____		Date _____	

INITIAL LIFT-OFF FORCES

(6) Number of Effective Strands Before Detensioning/Lift-off _____				
(7) Concrete Surface Temperature Adjacent to Tendon _____				
(8) Measure Distance From Anchor Head to End of Strands _____Inches				
(9) Measure Initial Shim Stack Length _____Inches				
CAUTION: Jacking Pressure Shall Not Exceed 1800 Kips for 55 Strands During Lift-off and Detensioning Operations.				
(10) Lift-off Force (Kips) and Pressure (Ksi)	(a)	KIPS	(a)	KSI
	(b)	KIPS	(b)	KSI
	(c)	KIPS	(c)	KSI
	AVG	KIPS	AVG	KSI

DETENSIONING DATA

(11) Pressurize to P_{JACK} for Number of Effective Strands (KSI) P_{JACK} = 1590 KIPS for 55 Strands, 1560 KIPS for 54 Strand _____KSI			
(12) Measure Distance from BP to Base of Anchor Head. _____ Inches			
(13) Depressurize to 70%, 35%, 10% of P_{JACK}	70% (a)____KSI	35% (b)____KSI	10% (c)____KSI
(14) Measure Distance from BP to Base of Anchor Head.	(a)____IN	(b)____IN	(c)____IN
(15) Depressurize to Zero.			
(16) Measure Distance from BP to Base of Anchor Head. _____Inches			
(17) Remove Ram.			
(18) Was Examination Strand Removed from This End? _____Yes _____No			
(19) Are There Any Possible Damaged or Broken Strands? _____Yes _____No			

RECORDED BY _____ DATE _____
Examiner

REVIEWED BY _____ DATE _____
Registered Professional Engineer

APPROVED BY _____ DATE _____
Supervisor, Design Engineering or designee

REVIEWED BY _____ DATE _____
ANII

DETENSIONING AND RETENSION DATA

(1) Tendon No. _____	(2) Location _____

RETENSIONING

(20) Number of Effective Strands At Retensioning. _____			
(21) Concrete Surface Temperature Adjacent to Tendon. _____			
(22) Ensure any shims measured in step 16 are reinstalled. Install Ram. Check Gauges = (Zero) at No Load.			
CAUTION: Jacking Pressure Shall Not Exceed 1560 Kips for 54 Strands During Retensioning Operations.			
(23) Pressurize to 10%, 35%, 70% of P_{JACK}. P_{JACK} = 1560 KIPS for 54 Strands.	10% (a)____KSI	35% (b)____KSI	70% (c)____KSI
(24) Measure Distance from BP to Anchor Head.	(a)____IN	(b)____IN	(c)____IN
(25) Pressurize to P_{JACK} for Number of Effective Strands at Retensioning (KSI) _____KSI			
(26) Measure Distance from BP to Anchor Head. _____Inches			
(27) Shim to New Lift-Off Force. (See Section 6.7.1.1) Shim Length: _____Inches			
(28) Depressurize to Zero.			
(29) Measure Distance From Anchor Head to End of Strands _____Inches			
(30) New Lift-off Force (Kips) and Pressure (Ksi).	(a) KIPS	(a) KSI	
	(b) KIPS	(b) KSI	
	(c) KIPS	(c) KSI	
	AVG KIPS	AVG KSI	
(31) Compute Elongations (Attachment 14).			

RECORDED BY _____ DATE _____
Examiner

REVIEWED BY _____ DATE _____
Registered Professional Engineer

APPROVED BY _____ DATE _____
Supervisor, Design Engineering or designee

REVIEWED BY _____ DATE _____
ANII

WIRE EXAMINATION DATA

TENDON IDENTIFICATION _____

DATE WIRE EXAMINED _____

WIRE LENGTH (FT) _____

0' ——— 70'

ANCHORHEAD END _____

70' ——— 140'

140' ——— 210'

210' ——— 280'

280' ——— 350'

350' ——— 420'

420' ——— 490'

CORROSION LEVEL #1 NO VISIBLE OXIDATION
#2 VISIBLE OXIDATION, NO PITTING
#3 0 PITTING < .003"
#4 .003" < PITTING < .006"
#5 .006" < PITTING < .010"

RECORDED BY _____ DATE _____
Examiner

REVIEWED BY _____ DATE _____
Registered Professional Engineer

APPROVED BY _____ DATE _____
Supervisor, Design Engineering or designee

REVIEWED BY _____ DATE _____
ANII

TENDON WIRE TEST

(1)	TENDON IDENTIFICATION AND LOCATION	
(2)	SAMPLE NUMBER	
(3)	DATE WIRE TESTED	
(4)	DATA RECORDED BY:	
(5)	MEASURE WIRE DIAMETER (IN.)	
(6)	PRESSURIZE TO 20,650 POUNDS (50% of GUTS)	
(7)	DECREASE PRESSURE TO 4130 POUNDS (10% of GUTS)	
(8)	MEASURE SAMPLE LENGTH (JAW-TO-JAW)(IN.)	
(9)	ATTACH EXTENSOMETER AND MEASURE GAGE LENGTH (IN.)	
(10)	CALCULATE 1% OF GAGE LENGTH (IN.)	
(11)	SET DIAL INDICATOR TO 1% OF GAGE LENGTH	
(12)	INCREASE PRESSURE UNTIL DIAL INDICATOR SHOWS 0.000" EXTENSION. THIS IS THE 1% YIELD POINT LOAD (POUNDS)	
(13)	RECORD 1% YIELD LOAD (POUNDS)	
(14)	CALCULATE YIELD POINT PRESSURE (PSI)	
(15)	RECORD SAMPLE LENGTH (JAW-TO-JAW) AT 1% YIELD POINT (IN.)	
(16)	CALCULATE JAW-TO-JAW DISTANCE @ 3.5% ELONGATION	
(17)	RECORD LOAD AT 3.5% ELONGATION (POUNDS)	
(18)	CALCULATE 3.5% ELONGATION PRESSURE (PSI)	
(19)	INCREASE LOAD UNTIL WIRE FAILS	
(20)	RECORD LOAD AT WIRE FAILURE (POUNDS)	
(21)	CALCULATE FAILURE POINT PRESSURE (PSI)	
(22)	RECORD DISTANCE BETWEEN WIRE BREAK AND JAW (IN.)	

GUTS: GUARANTEED ULTIMATE TENSILE STRENGTH OF ONE (1) STRAND = 41,300 POUNDS.

RECORDED BY _____ DATE _____
Examiner

REVIEWED BY _____ DATE _____
Registered Professional Engineer

APPROVED BY _____ DATE _____
Supervisor, Design Engineering or designee

REVIEWED BY _____ DATE _____
ANII

TENDON ANCHORAGES

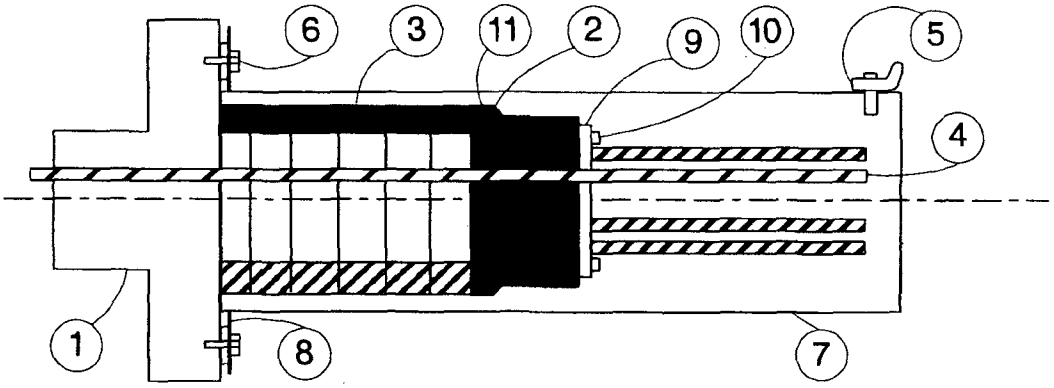

Type B (modified surveillance) Tendon

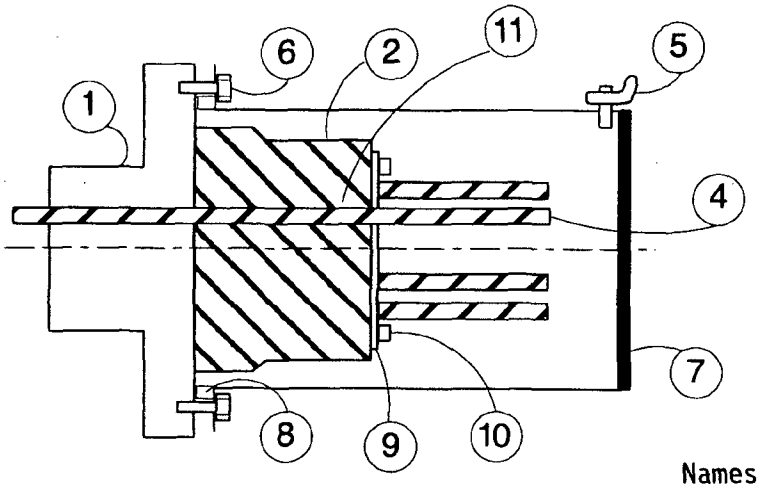

Type A (standard) Tendon

Names of Parts:

1. Bearing Plate
2. Anchorhead
3. Anchorhead Shims
4. Tendon Strand
5. Petcock
6. Boxhead Capscrews
7. Tendon End Cap (Grease Cap)
8. O-ring
9. Wedge Retainer Plate (only required for stressing operations)
10. Boxhead Capscrew (only required for stressing operations)
11. Wedge

FIGURE NO. 1

TENDON ANCHORAGES

DETAILS OF ANCHORAGES

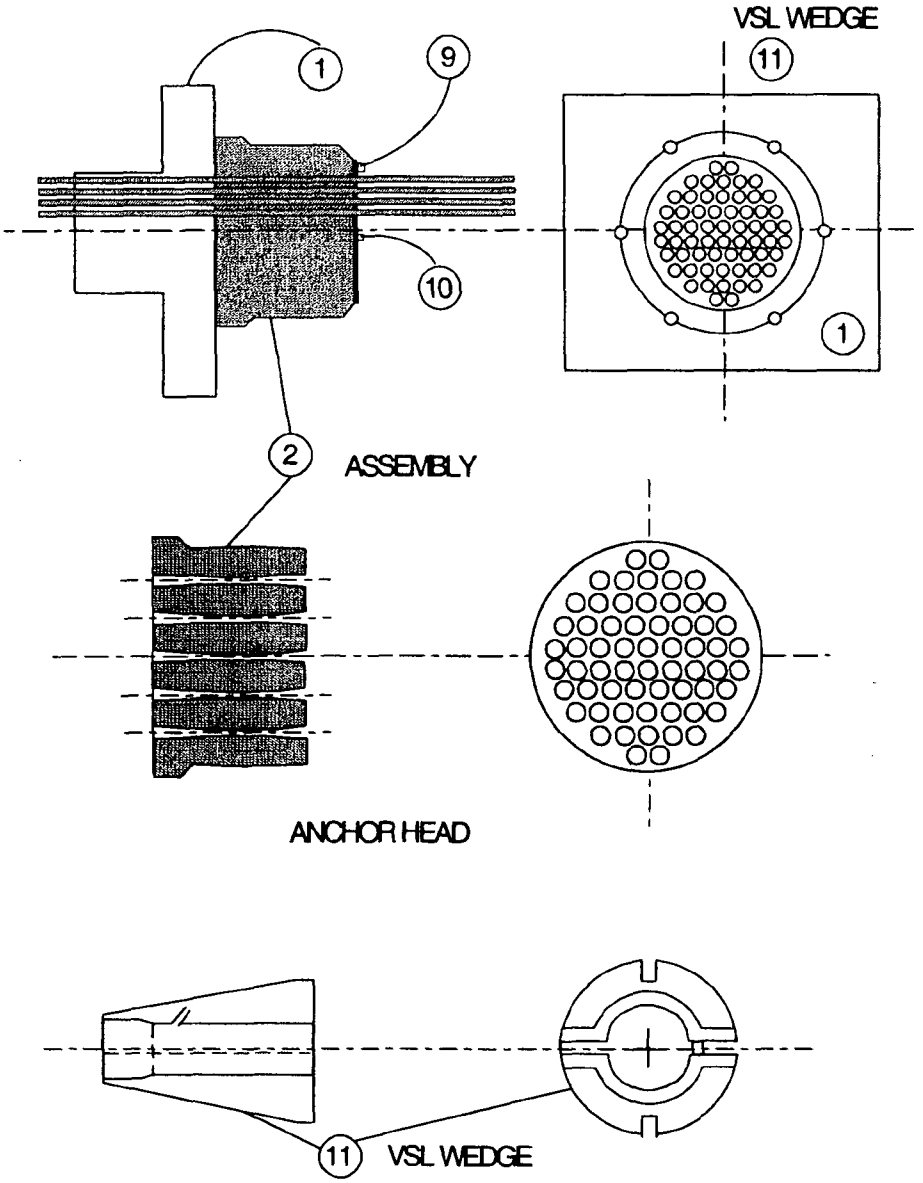

Names of Parts
1. Bearing Plate
2. Anchorhead
9. Wedge Retainer Plate
10. Boxhead Capscrew
11. Wedge

FIGURE NO. 2

TENDON ANCHORAGES

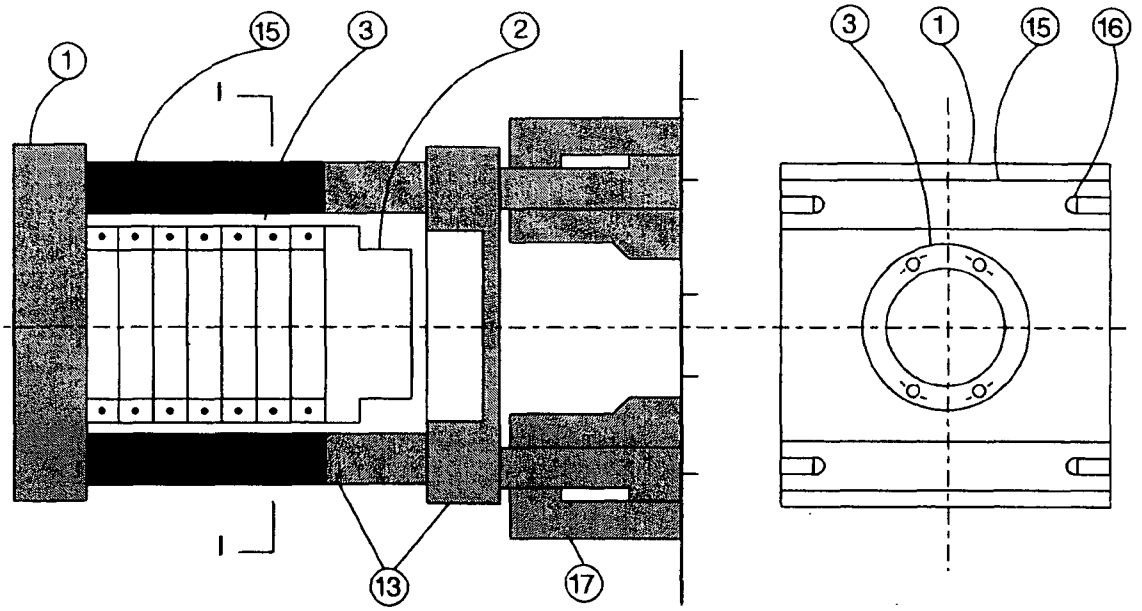

ASSEMBLY CROSS-SECTION

SECTION I-I

Name of Parts

1. Bearing Plate
2. Anchorhead
13. Jack Chair
17. Hydraulic Ram

3. Anchorhead Shims
15. Jack Chair Shims
16. Shim Support Bolts

FIGURE NO. 3

TENDON HEAD
STRAND ORIENTATION

TENDON No. ___
LOCATION _____

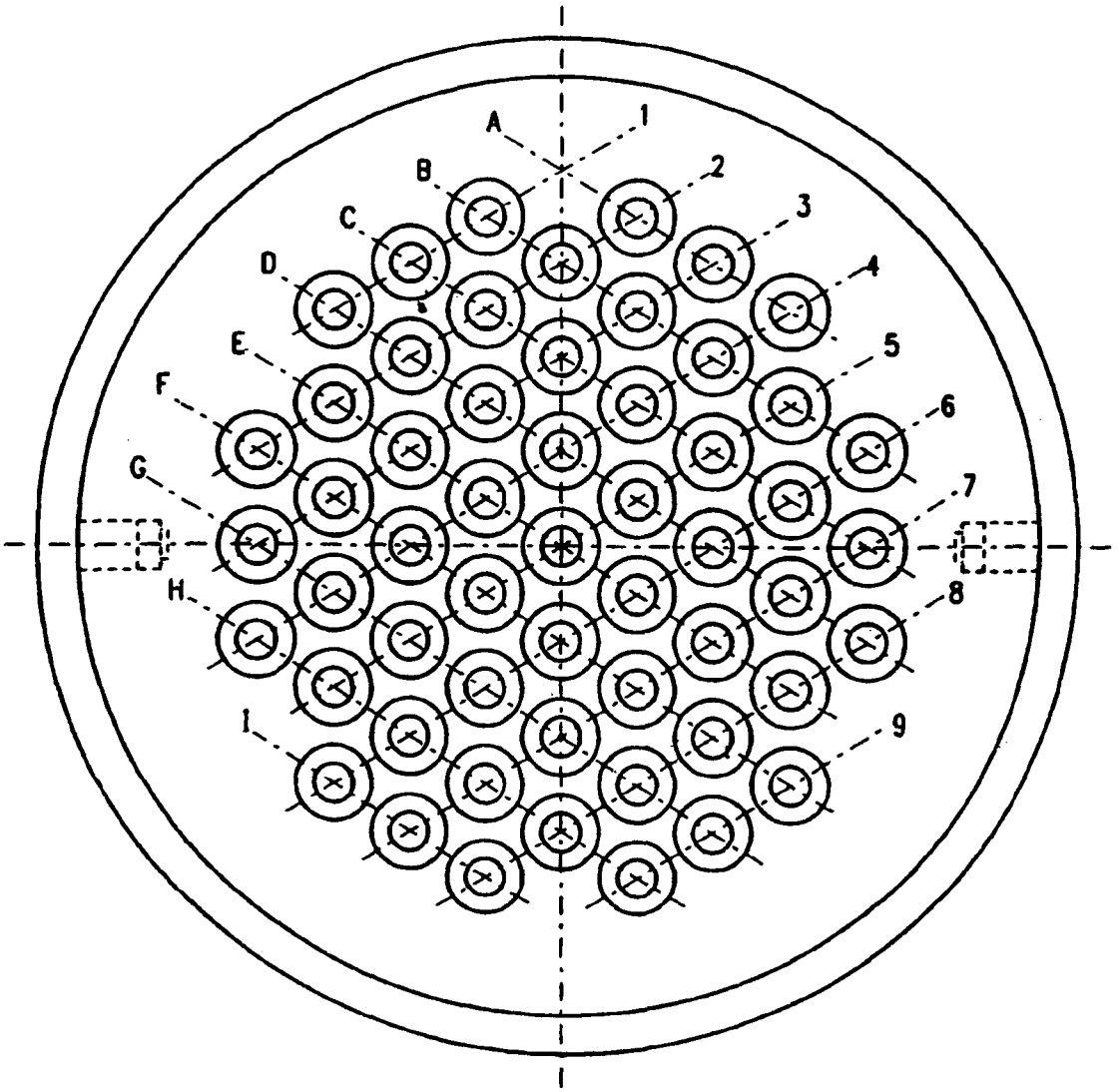

ELEVATION TENDON HEAD

LABORATORY TESTING OF SHEATHING FILLER MATERIAL

1.0 GENERAL

This Attachment specifies the procedures which shall be used for laboratory testing of tendon sheathing filler, Visconorust 2090-P-4:

a. The amount of water soluble chlorides, nitrates and sulfides which are leached from a given contract area between water and sheathing filler under standard conditions.

b. The water content of the sheathing filler.

c. The reserve alkalinity of the sheathing filler as indicated by the Total Base Number (TBN).

These requirements do not relieve the testing laboratory of responsibility for conducting the necessary laboratory tests in a manner consistent with industry standards.

2.0 WORK INCLUDED

Four, one-quart test samples (two from each tendon end) will be sent to the laboratory for testing in accordance with Section 3.0. The concentration of water soluble impurities and water in these samples is not expected to exceed the following:

2.1 Chlorides - 2 ppm

2.2 Nitrates - 4 ppm

2.3 Sulfides - 2 ppm

2.4 Water (H_2O) - 10% of dry weight

A report meeting the requirements of Section 4.0 shall be submitted.

3.0 TEST DESCRIPTIONS

Each sample of sheathing filler shall be made and tested as follows:

3.1 Water Soluble Impurities

A water extraction of each sample of sheathing filler shall be made and tested as follows:

LABORATORY TESTING OF SHEATHING FILLER MATERIAL

3.0 TEST DESCRIPTIONS (Continued)

3.1.1 Using a spatula, coat the inside (bottom and sides) of a 1 liter glass beaker with a 1/4-inch layer of sheathing filler.

3.1.2 Fill beaker with distilled water at room temperature.

3.1.3 Heat the water to a controlled temperature of 100°F and maintain for four hours. Do not heat on a hot plate. Heat either in an oven or by use of an immersion heater so that the water will remain clear for tests.

3.1.4 Run a blank on distilled water. If titrating, use a microburet, 1 ml or 5 ml, with 0.01 - 0.05 ml graduation intervals.

3.1.5 Decant water and analyze for soluble ions. Test only for salts in leached water. The water analysis shall be as follows:

3.1.6 Water-soluble chlorides (Cl) are determined in accordance with ASTM D512 with a limit of accuracy of 0.5 ppm.

3.1.7 Water-soluble nitrates (NO_3) are determined by the Water and Sewage Analysis Procedure of the Hach Chemical Company, Ames, Iowa, or by ASTM D992-78 Brucine Method with a limit of accuracy of 0.5 ppm.

3.1.8 Water-soluble sulfides (S) are determined in accordance with American Public Health Association (APHA) standards with a limit of accuracy of 1 ppm. The APHA 427 Standard methods (Methylene Blue procedure) or the Hach Chemical Company method are used.

3.2 Water Content

Water content (H_2O) as percent of dry weight shall be determined in accordance with ASTM-D95.

3.3 Total Base Number (TBN)

Total Base Number shall be determined in accordance with ASTM-D974 (modified).

3.3.1 Place a 10 gram sample of sheathing grease in a 500 ML Erlenmeyer Flask.

LABORATORY TESTING OF SHEATHING FILLER MATERIAL

3.0 TEST DESCRIPTIONS (Continued)

3.3.2 Add 10 cc Isopropyl Alcohol and 5 cc Toluene to the sample in the flask. Heat until sample goes into solution.

3.3.3 Add 90 cc of distilled water and 20 cc of 1N Sulphuric acid (H_2SO_4). Heat on a 100°C (212°F) steam bath for 30 minutes. Stir well.

3.3.4 Add a few drops of Phenolphthalein indicator.

3.3.5 Titrate with 1N Sodium Hydroxide (NaOH) solution until the lower layer just turns pink.

3.3.6 The Total Base Number (TBN) expressed as milligrams of KOH per gram of sheathing grease shall be calculated as follows:

$$TBN = \frac{\left((20)\left(N_a\right) - (B)\left(N_b\right)\right) \times 56.1}{W}$$

where N_a = Normality of Sulphuric Acid (H_2SO_4) solution

N_b = Normality of Sodium Hydroxide (NaOH) solution

B = Milliliters of Sodium Hydroxide (NaOH) solution used for titration

W = weight of sample in grams

NOTE: The actual values for N_a, N_b, B and W must be used.

4.0 REPORT

The report shall contain the following information:

4.1 Sample identification.

4.2 Concentration of water soluble chlorides, nitrates and sulfides within an accuracy of 0.1 ppm.

4.3 Concentration of water (H_2O) within an accuracy of 0.1 percent of dry weight of filler.

4.4 Total Base Number within an accuracy of 0.01 mg reagent per gram of filler.

RAM CALIBRATION PROCEDURE

I. OBJECTIVE

This appendix provides the instructions for calibration of the rams to the gauges to determine lift-off forces as required by Section 6.3. Accuracy for the calibration shall be within 1.5% of the specified ultimate tensile strength of the tendon (±34 KIPS).

II. PREREQUISITES

1. Test machine shall be a Baldwin - Universal tester or equal capable of generating 2,400,000 lbs. and shall be calibrated and traceable to the National Bureau of Standards.

2. Rams, pumps, gauges and other equipment shall be operable, free of defects and in calibration if applicable.

III. PRECAUTIONS

See Section 4.0 of the procedure for ram operational precautions.

IV. PROCEDURE

NOTES: (1) If target pressure on master gauge is exceeded, drop hydraulic pressure to approximately 200 psi below the target pressure before re-attempting the reading.

(2) Record the ending extension for each run. If the change in ram extension exceeds ½", it is permissible to apply load from the test machine simultaneously to minimize the additional extension. This note is primarily applicable to the 5½" extension readings, since the maximum ram stroke is 6 inches.

(3) **Do NOT exceed the ram maximum safe load of 8000 psi.**

1. Connect hoses to ram and hydraulic pump.

2. Connect one 10 ft. hose to the ram gauge port and connect three hydraulic gauges on the other end.

3. Cycle the ram two times by fully extending and retracking the piston.

4. Position the ram in the testing machine.

5. Extend the ram piston 1½ inches.

6. Lower the testing machine crosshead to the top of the piston, but not touching. Verify zero load on test machine and pressure gauges.

7. Load the testing machine using the hydraulic pump and ram. Record a reading at 1000 psi and at 500 psi increments up to the corresponding 1800 KIPS maximum hydraulic ram load on Attachment 11, page 3 of 4. (Always read while advancing upwards while loading the hydraulic ram.)

8. Record the ending extension for the run.

RAM CALIBRATION PROCEDURE

IV PROCEDURE (Continued)

9. Release load until the piston is clear.

10. Retract test machine head and extend the ram piston to 3 inches and repeat steps 6 through 9.

11. Retract test machine head and extend the ram piston to 4½ inches and repeat steps 6 through 9.

12. Retract test machine head and extend the ram piston to 5½ inches and repeat steps 6 through 9.

13. Secure equipment in accordance with 6.3.1.2 and prepare for shipment to SONGS.

14. Average the pressures and loads for each pressure interval from all four (4) ram extensions. Record these values on Attachment 11 page 4 of 4.

15. Prepare load chart and/or compute a linear equation of force (KIPS) vs. pressure (KSI) for each gauge. (Make note of the standard error deviation.)

RAM CALIBRATION PROCEDURE

Ram Calibration Report No. _____ Ram No. _____ Date _____

Location _____ Facility _____ Test Machine Description _____

Master Gauge ID# _____	Gauge #1 ID# _____				Gauge #2 ID# _____				Testing Machine ID# _____			
Pressure (Ksi) at All Ram Extensions	Pressure (Ksi) at Ram Extension:				Pressure (Ksi) at Ram Extension:				Load (Kips) at Ram Extension:			
	1-1/2"	3"	4-1/2"	5-1/2"	1-1/2"	3"	4-1/2"	5-1/2"	1-1/2"	3"	4-1/2"	5-1/2"
1.000												
1.500												
2.000												
2.500												
3.000												
3.500												
4.000												
4.500												
5.000												
5.500												
6.000												
6.500												
7.000												
7.500												
8.000												

Ending Extension (in.) _____ _____ _____ _____

_____ _____ _____
Calibration **PERFORMED BY:** Testing Machine Operator **WITNESSED BY:**

RAM CALIBRATION PROCEDURE

GAUGE # KSI	GAUGE # KSI	GAUGE # KSI	LOAD (KIPS)
1.000			
1.500			
2.000			
2.500			
3.000			
3.500			
4.000			
4.500			
5.000			
5.500			
6.000			
6.500			
7.000			
7.500			
8.000			
	EQUATION	EQUATION	
Date	SAN ONOFRE	AVERAGED RAM CALIBRATION SUMMARY	Job No.
Originator	RAM # CALIBRATION REPORT		of
Chk'd By			

HYDRAULIC RAM OPERATING AND MAINTENANCE INSTRUCTIONS

A. To Operate at High Temperatures

Check to see that all hydraulic fittings are tight and properly connected.

B. To Operate at Low Temperatures

1. Check to see that all hydraulic fittings are tight and properly connected.

2. Start the pump and run the ram in and out three or four times to warm the hydraulic oil.

C. Out-of-Service Protection

1. The unit should be stored in a warm, dry place when not in use.

2. Make sure all hydraulic hose fittings are capped with proper caps.

3. Make sure the ram is retracted to the closed position.

4. Cover with a canvas cover. (Do not use Visqueen.)

D. Hydraulic Ram Maintenance

1. Check frequently to ensure that the hydraulic pressure fittings are in good condition at all times.

2. Check and clean all hydraulic connections when connecting hoses. Both the ram and hose fittings are spring loaded, and if not kept clean it will cause one fitting to not release when under pressure.

3. Never exceed 8,000 psi hydraulic pressure.

4. Always hoist with hoisting hooks. Never sling the ram.

E. Hydraulic Oil

For high and low temperatures, use Enerpac HF Oil or equivalent. The oils should possess the following:

1. Wide temperature range: -50°F to +150°F.

2. Film protective lubricity.

3. Anti-rust, foaming and sludge additives.

The hydraulic oil should be stored indoors in an air-tight container. If the oil is allowed to become dirty or water is mixed with it, it will cause a pumping failure.

CRITICAL CHARACTERISTICS FOR FILLER GREASE* AND O-RINGS

I. CRITICAL CHARACTERISTICS FOR FILLER GREASE

Material: Visconorust 2090P-4 Casing Filler - Nuclear Grade

Manufacturer: Viscosity Oil Co.
600-H Joliet Road
Willowbrook, IL 60521
(630)-850-4000

Physical Properties	Tests	Criteria
1. Lbs. per gallon (@ 60°F)		7.3 - 7.4
2. Specific Gravity (@ 60°F)	ASTM D-1298	0.88 - 0.94
3. Congealing Point °F	ASTM D-938	135°F MIN.
4. Flash Point °F	ASTM D-92	420°F MIN.
5. VISCOSITY SUS @ 210°F	ASTM D-88	150 - 300
6. Consistency (cone penetration @ 77°F)	ASTM D-937	170 - 200
7. Total Base No. (mgKOH/g)	ASTM D-974 (modified)	35 MIN.
8. Water Soluble Chlorides Ions	ASTM D-512	2 ppm Max.
9. Water Soluble Nitrates Ions	ASTM D-992	4 ppm Max.
10. Water Soluble Sulfides Ions	APHA 427	2 ppm Max.

II. CRITICAL CHARACTERISTICS FOR O-RINGS

Previously procured directly from VSL Corporation.

1. Dimension Check (Nominal). 14.875 inch diameter (Centerline)
   0.750 inch thickness
2. Visually examine for flaws and cracks.
3. Material testing not required.

ELONGATION MEASUREMENTS

Tendon Number _____

ELONGATION DATA (From Attachment 6):

Tendon End #1 _____		Tendon End #2 _____	
(12) _____ In	(24a) _____ In	(12) _____ In	(24a) _____ In
(14a) _____ In	(24b) _____ In	(14a) _____ In	(24b) _____ In
(14b) _____ In	(24c) _____ In	(14b) _____ In	(24c) _____ In
(14c) _____ In	(26) _____ In	(14c) _____ In	(26) _____ In
(16) _____ In		(16) _____ In	

A. INITIAL ELONGATION (% OF P_{JACK})

(A1) 100%	=	$12_{(1+2)} - 16_{(1+2)}$ =	_____ In
(A2) 70%	=	$14a_{(1+2)} - 16_{(1+2)}$ =	_____ In
(A3) 35%	=	$14b_{(1+2)} - 16_{(1+2)}$ =	_____ In
(A4) 10%	=	$14c_{(1+2)} - 16_{(1+2)}$ =	_____ In

B. FINAL ELONGATION (% OF P_{JACK})

(B1) 100%	=	$26_{(1+2)} - 16_{(1+2)}$ =	_____ In
(B2) 70%	=	$24c_{(1+2)} - 16_{(1+2)}$ =	_____ In
(B3) 35%	=	$24b_{(1+2)} - 16_{(1+2)}$ =	_____ In
(B4) 10%	=	$24a_{(1+2)} - 16_{(1+2)}$ =	_____ In

C. PERCENT CHANGE IN ELONGATION DATA (54 STRANDS RETENSIONED)

(C1) 100%	=	(A1-B1) / (A1) X 100% =	_____ %
(C2) 70%	=	(A2-B2) / (A2) X 100% =	_____ %
(C3) 35%	=	(A3-B3) / (A3) X 100% =	_____ %
(C4) 10%	=	(A4-B4) / (A4) X 100% =	_____ %

Notation Note: $12_{(1+2)}$ = Data Item (12) from End #1 + Data Item (12) from End #2.

RECORDED BY _____ DATE _____
Examiner

REVIEWED BY _____ DATE _____
Registered Professional Engineer

APPROVED BY _____ DATE _____
Supervisor, Design Engineering or designee

REVIEWED BY _____ DATE _____
ANII

TENDON SURVEILLANCE BASES

(Historical Information Previously included in LCS 3.6.100)

Containment structural integrity is demonstrated by:

a. Determining the lift off force of tendons selected in accordance with Attachment 1 of S023-XXIV-3.8 and comparing this force with the tolerance band values listed in Table 1 at the first year inspection. For subsequent inspections, for tendons and periodicities per Attachment 1, the upper tolerance band value for first year lift off forces shall be decreased by the amount X1 log t kips for U tendons, and Y1 log t kips for hoop tendons and the lower tolerance band value for lift off forces shall be decreased by the amount X2 log t for U tendons, and Y2 log t for hoop tendons where t is the time interval in years from initial tensioning of the tendon to the current testing date and the values X1, X2, Y1, and Y2 are in accordance with the values listed in Table 1 for the surveillance tendon. This test shall include essentially a complete detensioning of tendons selected in accordance with Attachment 1 in which the tendon is detensioned to determine if any wires or strands are broken or damaged.

Tendons found acceptable during this test shall be retensioned to obtain a lift off force equal to +0, -5% of the prescribed upper tolerance band value. During retensioning of these tendons, the change in the load and elongation shall be measured simultaneously at a minimum of three, approximately equally spaced, levels of force between the seating force and zero. If elongation corresponding to a specific load differs by more than 10% from that recorded during installation of tendons, an investigation should be made to ensure that such difference is not related to wire failures or slip of wires in anchorages. If the lift off force of any one tendon in the total sample population lies between 95% of the prescribed lower tolerance band value, and 90% of the prescribed lower tolerance band value two tendons, one on each side of this tendon, shall be checked for their lift off force. If both of these adjacent tendons are found acceptable, the surveillance program may proceed considering the single deficiency as unique and acceptable. The tendon(s) shall be retensioned such that the lift off force is equal to 0, -5% of the prescribed upper tolerance band value. The following lift off force measurement results are considered to be evidence of abnormal degradation of the Containment structure:

1. The measured force in not more than one tendon is between 90% and 95% of the predicted force, and

2. The measured forces in two tendons located adjacent to the tendon, where the lift off force is between 95% and 90% of the predicted force, are not less than 95% of the predicted forces, and

3. The measured forces in all the remaining sample tendons are not less than 95% of the predicted force, and

4. The average of all measured tendon forces, including those tendons added for additional lift off measurements, for each type of tendon is equal to or greater than the minimum required prestress specified at the anchorage for that type of tendon.

TENDON SURVEILLANCE BASES

b. Performing tendon detensioning and material tests and inspections of a previously stressed tendon wire or strand from one tendon of each group (hoop and U), and determining over the entire length of the removed wire or strand that:

1. The tendon wires or strands are free of corrosion, cracks, and damage, and

2. A minimum tensile strength value of 270 ksi (guaranteed ultimate strength of the tendon material) for at least three wire or strand samples (one from each end and one at mid-length) cut from each removed wire or strand. Failure of any one of the wire or strand samples to meet the minimum tensile strength test is evidence of abnormal degradation of the Containment structure.

c. Performing visual inspections of the following:

1. Containment Surfaces - The structural integrity of the exposed accessible interior and exterior surfaces of the Containment shall be determined during the shutdown for, and prior to, each Type A Containment leakage rate test by a visual inspection of these surfaces and verifying no apparent changes in appearance or other abnormal degradation (e.g., widespread cracking, spalling and/or grease leakage).

2. End Anchorages - The structural integrity of the end anchorages (e.g., bearing plates, stressing washers, shims, wedges and anchorheads) of all tendons inspected pursuant to Attachment 1 shall be demonstrated by inspection that no apparent changes have occurred in the visual appearance of the end anchorage.

3. Concrete Surfaces - The structural integrity of the exposed concrete surfaces adjacent to the end anchorages of hoop tendons inspected pursuant to Attachment 1 shall be demonstrated by visual examination of the crack patterns to verify no abnormal material behavior.

d. Verifying the operability of the sheathing filler grease by the following:

1. No significant voids (greater than 10% of the net duct volume), or the presence of free water, within the grease filler material, taking into account temperature variations.

2. No significant changes have occurred in the physical appearance of the sheathing filler grease.

3. Complete grease coverage exists for the anchorage system.

4. Chemical properties are within the tolerance limits specified by the sheathing filler grease manufacturer.

The surveillance requirements for demonstrating the structural integrity of the Containment are in compliance with 10CFR50.55a(b)(2)(viii) and ASME Section XI, Subsection IWL. The surveillance requirements are also in accordance with the recommendations of Revision 3 to Regulatory Guide 1.35, "Determining Prestressing Forces for Inspection of Prestressed Concrete Containments," July 1990; and Regulatory Guide 1.35.1, "Inservice Surveillance of Ungrouted Tendons in Prestressed Concrete Containment Structures," July 1990..

TENDON SURVEILLANCE BASES

Table 1
Tendon Lift-Off Force

Unit 2 - U Tendons

Tendon Number	Ends	First Year Maximum (kips)	First Year Minimum (kips)	X1	X2
43-109	43	1634	1457	21.2	31.2
	109	1604	1431	20.6	30.0
39-113	39	1625	1449	21.8	31.8
	113	1601	1428	20.0	30.0
31-121	31	1574	1406	21.2	29.3
	121	1586	1415	21.2	30.0
19-133	19	1644	1465	22.5	31.8
	133	1593	1423	20.6	30.0
9-143	9	1618	1444	21.8	31.2
	143	1598	1428	20.6	30.0
94-148	94	1560	1394	19.4	29.3
	148	1570	1403	20.6	28.7
88-154	88	1588	1415	21.2	30.0
	154	1568	1399	19.4	28.7
86-156	86	1567	1400	20.6	30.0
	156	1568	1399	19.4	28.7
66-176	66	1577	1407	20.6	30.0
	176	1579	1409	20.0	30.0
64-178	64	1560	1393	20.0	28.1
	178	1582	1412	20.6	28.7

Note:
The surveillance tolerance bands above have been calculated in C-257-11 for the specific surveillance year and are included in Attachment 2.

TENDON SURVEILLANCE BASES

Table 1 (continued)
Tendon Lift-Off Force

Unit 2 - Hoop Tendons

Tendon Number	Buttress	First Year Maximum (kips)	First Year Minimum (kips)	Y1	Y2
9	2	1528	1348	26.8	36.8
	3	1502	1328	25.6	31.8
20	1	1569	1383	28.1	39.3
	3	1527	1348	25.6	36.2
31	1	1443	1281	23.1	31.8
	2	1502	1349	24.3	46.2
42	2	1577	1398	26.2	36.2
	3	1549	1395	24.3	46.2
53	1	1597	1416	26.2	36.2
	3	1564	1390	25.6	35.0
64	1	1607	1426	26.2	37.5
	2	1570	1396	25.6	35.6
75	2	1553	1374	26.2	36.2
	3	1525	1371	24.3	45.6
86	1	1600	1423	21.2	31.2
	3	1527	1362	20.6	29.3
97	1	1563	1393	20.6	29.3
	2	1546	1380	19.4	29.3
108	2	1626	1450	21.8	30.6
	3	1587	1418	20.6	28.7

Note:
The surveillance tolerance bands above have been calculated in C-257-11 for the specific surveillance year and are included in Attachment 2.

TENDON SURVEILLANCE BASES

Table 1 (continued)
Tendon Lift-Off Force

Unit 3 - U Tendons

Tendon Number	Ends	First Year Maximum (kips)	First Year Minimum (kips)	X1	X2
9-143	9	1651	1472	22.5	32.5
	143	1633	1457	21.2	31.2
19-133	19	1651	1471	22.5	33.1
	133	1634	1458	21.2	31.8
43-109	43	1640	1461	22.5	31.8
	109	1634	1458	21.2	31.8
39-113	39	1639	1460	22.5	31.8
	113	1633	1456	21.8	31.8
31-121	31	1623	1447	21.2	31.8
	121	1638	1458	22.5	31.8
88-154	88	1596	1422	21.8	30.0
	154	1625	1460	19.4	29.3
66-176	66	1602	1428	21.8	31.2
	176	1590	1417	20.6	30.0
86-156	86	1595	1421	22.5	30.6
	156	1589	1415	21.2	30.0
95-147	95	1626	1447	22.5	31.8
	147	1613	1437	21.2	31.8
65-177	65	1571	1401	20.6	30.0
	177	1580	1409	21.2	31.2

Note:
The surveillance tolerance bands above have been calculated in C-257-11 for the specific surveillance year and are included in Attachment 2.

TENDON SURVEILLANCE BASES

Table 1 (continued)
Tendon Lift-Off Force

Unit 3 – Hoop Tendons

Tendon Number	Buttress	First Year Maximum (kips)	First Year Minimum (kips)	Y1	Y2
64	1	1564	1391	24.3	35.6
	2	1623	1438	27.5	37.5
53	1	1602	1421	26.2	37.5
	3	1610	1428	26.2	37.5
42	2	1589	1409	26.8	37.5
	3	1582	1402	27.5	36.2
75	2	1576	1394	26.2	37.5
	3	1548	1372	25.6	36.2
31	1	1498	1326	25.0	35.0
	2	1579	1391	27.5	38.1
20	1	1582	1393	27.5	38.7
	3	1539	1358	26.2	36.2
9	2	1486	1314	25.0	35.0
	3	1513	1337	25.6	36.2
108	2	1603	1433	20.6	31.2
	3	1624	1450	21.8	31.2
97	1	1551	1384	20.6	29.3
	2	1599	1424	21.2	31.8
86	1	1533	1367	19.4	28.1
	3	1592	1416	21.2	31.2

Note:
The surveillance tolerance bands above have been calculated in C-257-11 for the specific surveillance year and are included in Attachment 2.

ATTACHMENT 3

MAINTENANCE RULE FOR STRUCTURES

TABLE OF CONTENTS

MAINTENANCE RULE FOR STRUCTURES

1.0 OBJECTIVE

1.1 This procedure covers the process by which the Maintenance Rule (MR) for Structures program is implemented at San Onofre. The MR for Structures program complies with NRC requirements published in 10 CFR 50.65 and guidelines from Regulatory Guide 1.160.

1.1.1 The work performed under the program consists of periodic inspections of plant buildings to evaluate whether they are being effectively maintained such that they remain capable of performing their intended functions. If so, the program objectives are met by documenting the inspection findings and evaluations. Otherwise, the program further requires establishing goals for the structure and performing corrective actions as necessary to provide reasonable assurance that the affected structures are capable of fulfilling intended functions.

2.0 REFERENCES

2.1 NRC Commitments

2.1.1 10 CFR 50.65, Requirements for Monitoring the Effectiveness of Maintenance at Nuclear Power Plants

2.1.2 NUMARC 93-01, Industry Guideline for Monitoring the Effectiveness of Maintenance at Nuclear Power Plants

2.1.3 Regulatory Guide 1.160, "Monitoring the Effectiveness of Maintenance at Nuclear Power Plants," Revision 2, March 1997

2.1.4 NUREG-1522, Assessment of Inservice Conditions of Safety-Related Nuclear Plant Structures

2.2 Procedures

2.2.1 SO123-XX-1 ISS2, Action Request/Maintenance Order Initiation and Processing

2.2.2 SO123-XV-5.3, Maintenance Rule Program

2.2.3 SO123-XXIV-7.15, Preparation and Verification of Design Calculations

2.3 Codes and Standards

NOTE: The complete list of design codes and standards applicable to SONGS 1 is given in Table 3.1-1 of the Unit 1 DSAR (Ref. 2.4.1). For SONGS 2 and 3, refer to Section 3.8.1.2 of the Units 2 and 3 UFSAR (Ref. 2.4.2), and DBD-SO23-TR-CS, "Codes and Standards Topical DBD," (Ref. 2.4.3).

2.3.1 American Institute of Steel Construction (AISC), "Manual of Steel Construction, Allowable Stress Design"

2.3.2 American Concrete Institute (ACI), "Guide for Making a Condition Survey of Concrete in Service," ACI 201.1R

2.3.3 American Concrete Institute (ACI), "Building Code Requirements for Reinforced Concrete," ACI 318

2.3.4 American Concrete Institute (ACI), "Code Requirements for Nuclear Safety-Related Concrete Structures," ACI 349

2.3.5 American Welding Society (AWS), "Structural Welding Code," AWS D1.1

2.3.6 American Society of Mechanical Engineers (ASME), "Boiler and Pressure Vessel Code," Section III and XI

2.3.7 American Concrete Institute (ACI), "Evaluation of Existing Nuclear Safety-Related Concrete Structures," ACI 349.3R

2.3.8 American Society of Civil Engineers (ASCE), "Guideline for Structural Condition Assessment of Existing Buildings," SEI/ASCE 11-99

2.4 Other

2.4.1 SONGS Unit 1 Defueled Safety Analysis Report (DSAR)

2.4.2 SONGS Units 2&3, Updated Final Safety Analysis Report

2.4.3 DBD-SO23-TR-CS, Codes and Standards Topical DBD

2.4.4 Maintenance Rule Expert Panel Meeting Minutes for August 12 and 16, 1996, "Performance Criteria for Switchyard and Unit 1"

2.4.5 Calculation S-02-C-001, Maintenance Rule Concrete Crack Inspection and Evaluation, Rev. 0

3.0 PREREQUISITES

3.1 Before using this document, verify the revision and any issued Temporary Change Notices (TCNs) and/or Editorial Corrections (ECs) are current by using one of the following methods:

3.1.1 Access the Nuclear Document Management System (NDMS) (preferred method).

3.1.2 Check it against a Corporate Documentation Management (CDM) SONGS controlled copy and any issued TCNs/ECs.

3.1.3 Contact CDM-SONGS by telephone or through counter inquiry.

3.1.4 Obtain a user-controlled copy of this procedure from CDM-SONGS or NDMS.

3.2 Verify level of use requirements on first page of this document.

3.3 Qualification Requirements:

3.3.1 PQS T4EN50 is required for implementing the Maintenance Rule Program structures.

4.0 PRECAUTION(S)

4.1 None

5.0 CHECKLIST(S)

5.1 None

6.0 PROCEDURE

6.1 RESPONSIBILITIES

6.1.1 The Maintenance Rule program divisional areas of responsibilities are specified in Section 6.2 of SO123-XV-5.3, Maintenance Rule Program. The Design Engineering Organization (DE) is responsible for monitoring structures under Section 6.6 of the above procedure.

.1 The Manager, Systems Engineering is responsible for the MR Program.

.2 The First Line Supervisor (FLS), DE Nuclear/Mechanical, Mechanical Systems & Analysis is responsible for the coordination of the MR for Structures program.

.3 The DE Civil Responsible Engineer (Civil RE), who reports to the FLS, is responsible for preparing inspection plans, coordinating inspections, performing evaluations and preparing inspection reports.

6.2 REQUIREMENTS

6.2.1 The quality and value of the examination results are dependent to an extent on the qualification and capabilities of the examination personnel. Therefore, the following shall be the minimum qualification requirements for the individuals responsible for the monitoring program:

.1 **Inspection Personnel** - The inspections shall be performed by personnel who are experienced in examining the conditions of structural elements and are knowledgeable about the plant. This may include the Civil REs, and Nuclear Oversight inspectors.

.2 **Evaluation Personnel** - The evaluations shall be performed by the Civil RE or designee who shall be degreed or a registered Civil Engineer and is familiar with the building and its systems, structures and components.

.3 PQS T4EN50 is required by the above personnel.

6.3 AFFECTED STRUCTURES

6.3.1 The safety related and nonsafety related structures required to be included in the Maintenance Rule Program scope are defined in Paragraph (b) of 10 CFR 50.65. In accordance with the methodology specified in Section 8.0 of NUMARC 93-01 "Industry Guideline for Monitoring the Effectiveness of Maintenance at Nuclear Power Plants," the following structures shall be covered under the SONGS MR Program:

.1 Units 2&3

.1.1 **Containment Building (including bellows and tendons)**: Primary functional requirements are to withstand the peak pressure resulting from a hypothetical failure of the Reactor Coolant System (RCS) or main steam system; provide radiological shielding; prevent the unmonitored leakage of airborne radioactive materials; and provide the support of nuclear steam supply system equipment.

.1.2 **Intake Structure (including gates, offshore conduits and structures)**: Primary functional requirements are to provide the interface with the ultimate heat sink, and house the major components of the circulating water system and the saltwater cooling system.

.1.3 **Auxiliary Building (Control, Radwaste and Penetration Areas)**: Primary functional requirements are to support various plant facilities and safety systems including the control room, decontamination, radioactive waste processing, the chemical and volume control system (CVCS), and the containment structure purge air system.

6.3.1.1.4 **Diesel Generator Building**: Primary functional requirement is to house the two diesel generators with complete auxiliary equipment required to provide emergency power to the plant.

.1.5 **Fuel Handling Building (including Spent Fuel Pools)**: Primary functional requirement is to provide facilities for the safe handling, storage and shipment of new and spent fuel assemblies.

.1.6 **Safety Equipment Building**: Primary functional requirement is to house the safety-injection system, containment spray system, component cooling water system, shutdown cooling heat exchanger, and engineered safety features (ESF) electrical gallery.

.1.7 **Turbine Building**: Primary functional requirements are to maintain structural integrity to avoid adverse impact to safety-related systems in the Safety Equipment Building, Auxiliary Building and the Intake Structure.

.1.8 **Condensate Storage and Refueling Water Tank Enclosure Building**: Primary functional requirement is to house the condensate storage tanks, the refueling water storage tanks, the auxiliary feedwater pumps and the associated piping.

.1.9 **Switchyard and Transformer Areas**: Primary functional requirement is to provide plant with offsite power.

.1.10 **Electrical and Piping Underground Galleries and Access Building**: Primary functional requirement is to protect of safety-related piping and electrical cable routed between safety-related structures.

.1.11 **Probable Maximum Flood (PMF) Control Structures**: Primary functional requirement is to protect safety-related structures, systems and components (SSCs) from flooding.

.1.12 **Makeup Demineralizer (West Berm)**: Primary functional requirement is to protect Unit 3 SSCs from flooding if demineralized water tanks were to rupture.

6.4 PERIODIC INSPECTIONS

6.4.1 Each of the structures included within the scope of the MR for Structures program shall be periodically inspected. The Civil REs shall conduct initial baseline inspections of their assigned structures to determine and document the baseline conditions.

6.4.2 The baseline conditions of structures shall be established to allow the discernment of changes to the material condition of structures.

6.4.3 Subsequent periodic inspections shall then be performed and the results documented to monitor the conditions of those structures. Changes in condition shall be trended and special inspections shall be performed as required to monitor any significant changes to the structure's material conditions which could affect its structural integrity.

6.4.4 Inspection Frequency - The inspection frequency for structures evaluated as acceptable shall be less than ten years. Adjustments shall be made to the inspection frequency considering the safety significance, condition, trend in condition, and environmental exposure of the structure.

.1 If the condition of a structure is degraded, adverse trends are present, or the structure is exposed to environmental degradation, the Civil RE shall consider more frequent inspections. For example, based on its past condition and exposure to salt water, the intake structure has been inspected every refueling outage.

.2 Inspection due dates shall be established following each evaluation of the structure and documented in inspection reports, as described in Section 6.5.

.3 In addition to scheduled inspections, supplemental inspections may be performed after any unusual events such as earthquakes.

6.4.5 Inspection Plan - Prior to each periodic inspection, the Civil RE shall prepare an inspection plan (see Attachment 2). The inspection plan shall include the scope of inspection, inspection methodology and the acceptance criteria used to inspect and evaluate the structure.

6.4.5.1 **Scope of Inspection** - The scope of inspection shall include all structural elements, such as floors, walls, columns, beams, miscellaneous supports, platforms, etc. The inspection is intended to assess the overall condition of structures, and need not require extensive condition documentation for every structural component. Findings should be focused on components that have evidence of damage or degradation observed during the inspection.

.2 The inspection scope should be organized by room or area of the building. SCE Architectural drawings may be used for room and area designations. For those areas that can only be accessed with Maintenance department support (e.g., entry requires pulling a hatch plug), the inspection plan should discuss Maintenance Order (MO) planning. The following items shall be documented, as deemed applicable based on the engineering judgment of the Civil RE:

.2.1 **Concrete** - Spalling, cracking, delaminations, honey combs, water in-leakage, chemical leaching, peeling paint, or discoloration, exposed or corroded reinforcement bars.

NOTES:

(1) Acceptable concrete crack widths are provided in Reference 2.4.5.

(2) Definitions of terms used to describe specific types of concrete degradation, with photographic examples, are given in Reference 2.3.2.

.2.2 **Steel** - Corrosion, peeling paint, beam/column/support deflection, vibration or damage, loose or missing anchors/fasteners, degraded base plates, missing or degraded grout under base plates, twisted beams, and cracked welds.

.2.3 **Settlement** - Excessive total or differential settlement.

6.4.5.2.4 **Miscellaneous**

- Masonry walls (cracks in joints, deteriorated penetrations, missing or broken blocks)
- Floors, floor hatches, covers, and seals.
- Roof systems (structural integrity of support system, deteriorated penetrations, i.e., drains, ventilations, etc., barrier integrity, signs of water infiltration, cracks, flashing degradation and expansion joint condition)
- Siding, plaster walls, drywalls (structural integrity, cracks, holes, corrosion and visible damage)
- Windows/doors (missing panes, cracks, deteriorated glazing, broken or cracked frames, missing or damaged hardware, and seal integrity)
- Earthen structures/dams (erosion, settlement, slope stability, seepage, drainage systems, integrity of rip rap, and environmental conditions, i.e., storms, floods, etc.)
- Containment prestressing tendons (degradation of grease caps and anchor heads)
- Water (accumulation, seepage or leakage)
- Paint coatings (peeling, flaking or corrosion), especially inside the Containment Structure due to concern for the blockage of containment emergency sump screens during recirculation
- Equipment supports and anchorages (structural integrity of support system, degraded grout, missing/loose fasteners, cracked welds)
- Seismic gaps (insufficient space for structural movement during a seismic event due to inclusion of foreign objects or debris, deteriorated elastomers)

.3 The inspection scope listed above is not intended to be all inclusive. The scope shall vary depending on the structure being inspected. The Civil RE shall inspect all relevant structures within the building for signs of degradation and abnormal conditions that may warrant monitoring or remedial action.

6.4.5.4 **Inspection Methodology** - The primary inspection and monitoring method shall be visual examination of the accessible areas to assess the conditions of the affected structures. Other non-destructive examination methods may be employed when deemed necessary. The degree of examination shall depend on many factors including the age of the structure, environmental conditions, accessibility and service requirements.

.4.1 The inspection plan shall identify all existing site surveillance and preventive maintenance programs used to supplement the MR for Structures program. These site programs may be credited to satisfy the applicable monitoring requirements of the Maintenance Rule program and should be reviewed and revised as necessary to meet the requirements of the Maintenance Rule. Such control could be the utilization of existing site preventive maintenance programs (plant walkdowns, site surveillance, inspection programs, etc.) that are currently in place.

.5 **Acceptance Criteria** - The acceptance criteria for the structure shall be included in the inspection plan. Acceptance criteria shall be based on the applicable codes and standards specified in Section 2.3, structural calculations, or on the sound judgment of the Civil RE. As a minimum, structures and their elements shall meet the design basis requirements of the UFSAR or DSAR, as applicable; i.e., they must be able to function as designed for all relevant load combinations.

.5.1 In addition, the inspection plan should describe how industry operating experience data, if any, shall be used to assess potentially applicable conditions in the building.

6.4.6 Performing Inspections

.1 Findings and observations obtained from the inspections shall be documented on Inspection Data Log Sheets (see Attachments 2 and 3) as described in Section 6.7.1.

.1.1 **Inaccessible Areas** - Some structures may be inaccessible due to radiation or obstructions. Site specific characteristics, industry experience data or testing history of features under similar conditions may aid in the examination. In addition, accessible areas subject to similar conditions (material, environment, etc.) may be evaluated in lieu of inaccessible areas. Whenever inaccessible areas are excavated, exposed or modified, an inspection should be performed. The Inspector shall note on the inspection data log sheet when areas are found to be inaccessible.

6.4.6.1.2 **Nonconforming Conditions** - An Action Request (AR) shall be prepared at the time of discovery for all conditions meeting the criteria for an AR as described in S0123-XX-1 ISS2, Action Request/Maintenance Order Initiation and Processing. The AR shall be used to document the conditions including any evaluation, operability assessment, and proposed corrective action. Implementation of corrective actions should be tracked in the Maintenance Rule quarterly report. Remedial actions for restoring and maintaining the structural integrity of the structure may include issuing Repetitive Maintenance Orders (RMOs) for those conditions requiring preventive maintenance or periodic inspections.

.1.3 **Minor Degradations** - ARs are not required for minor degradations. If the Civil RE recommends maintenance for a minor degradation, an AR should be prepared prior to approval of the inspection report to initiate and track work performed.

6.5 EVALUATIONS

6.5.1 Following each periodic inspection, the Civil RE shall utilize and evaluate the results obtained from the inspection and other site programs to determine the acceptability of the structure, to perform cause determinations for degraded conditions and to recommend corrective actions, where appropriate. Evaluations shall be documented in an inspection report, as described in Section 6.7.

.1 Use of Existing Programs - When existing site programs are credited for the inspection requirements of the Maintenance Rule, the program results (i.e., ARs or reports) shall be reviewed and evaluated for trends and applicability to the Maintenance Rule program. The results of this review shall be documented in the inspection report.

.2 Inaccessible Areas - Justification for bypassing inaccessible areas shall be provided in the inspection report.

.3 Evaluation Results - The evaluation should result in a determination as to whether a structure is acceptable or unacceptable. The Civil RE shall determine when conditions warrant trending, cause determination and any necessary corrective action. In addition, the inspection report shall specify a due date for the next periodic inspection.

6.5.1.4 Data Trending - The results and findings obtained from periodic inspections shall be compared with the established baseline conditions in the inspection report. Inspection reports shall note any changes in the material conditions since the previous inspection.

.5 Cause and Corrective Action - The inspection report shall include evaluations of cause and corrective actions, as described in Section 6.6, when required.

6.6 GOAL-SETTING AND CORRECTIVE ACTIONS

6.6.1 Per Paragraph (a)(2) of the Maintenance Rule, 10 CFR 50.65, goal-setting and corrective actions are not required where it has been demonstrated that the performance or condition of the structure is being effectively maintained such that it remains capable of performing its intended function. That is, if evaluations conclude that the structure is acceptable, the requirements of the Maintenance Rule are met by performing and documenting the periodic inspections and evaluations.

6.6.2 The Civil RE shall perform a cause determination when deficiencies exceed acceptance criteria or failures are identified. A cause determination may also be performed when deficiencies are discovered, but the structure is within the acceptance criteria.

6.6.3 Goal setting as required by 10 CFR 50.65 shall be instituted in accordance with procedure S0123-XV-5.3 (Maintenance Rule Program) when a structure is determined to be unacceptable. The goals and corrective actions should be effective in restoring and maintaining the acceptable condition of the structure. Actions for nonconforming conditions are discussed in Section 6.4.6.1.2. Systems Engineering shall be notified when a structure requires goal setting.

6.7 DOCUMENTATION

6.7.1 Inspection Documentation

.1 **Initial (Baseline) Inspections** - The Civil RE shall document all findings and results obtained from the initial baseline inspection to establish the baseline condition for the structure inspected. See Attachment 3 for recommended format of Inspection Data Log Sheets to be used in baseline inspections.

.2 **Subsequent Periodic Inspections** - The Civil RE shall document all findings and results obtained from subsequent periodic inspections to monitor and trend the condition of the structure inspected. See Attachment 4 for recommended format of Inspection Data Log Sheets to be used in subsequent periodic inspections.

.3 **Supplemental Inspections** - The inspection report may require supplemental inspections to trend the condition of specific components more frequently than the rest of the structure. Supplemental inspections may also be performed after any unusual events, such as earthquakes, or when initiated by plant procedures (Abnormal Operating Instructions, Action Requests, etc.). When inspections of specific conditions are conducted more frequently than the normal inspection intervals, the most recent inspection report shall be updated with the results of the supplemental inspection.

.4 **Inspection Data Log Sheets** - The Inspection Data Log Sheets utilized to document the walkdown observations and findings should contain, the following information:

.4.1 **Name of Inspector and Date of Walkdown** - The name of the Inspector and date of the walkdown shall be entered into the Data Log Sheet.

.4.2 **Unit No., Building Name and Elevation** - The unit number, name and elevation of the building inspected shall be entered into the Data Log Sheet, e.g., Unit 2/3, Auxiliary Building, Elevation 50'-0".

.4.3 **Building Area/ Room Number and Drawing No(s).** - The building area or room number of the structure inspected shall be denoted in the Data Log Sheet. The applicable drawing number(s) of the structure inspected shall also be entered on the Log Sheet. An example would be Control Area, Room 306E, Drawing 10102.

6.7.1.4.4 **Type/Location of Degraded Item, if any, including any applicable Equip/Comp ID No.** - If no nonconformances or degraded items are observed in the building area/room, the Inspector shall note as such on the Data Log Sheet. If a degraded item is found, the Inspector shall describe the type and location of the degraded item on the Log Sheet, e.g., concrete floor slab, elevation 50'-0", 8'-6" south of column line 18.4 and 3'-5" east of column line N.

.4.5 **Nature and Description (including any measurements) of degradation/deterioration** - The Inspector shall describe the nature and extent of the degraded item, and quantify the defect if possible, e.g., spalled concrete, 12" diameter and approximately 1-1/2" deep, no exposed rebar.

.4.6 **Photographs or Sketches of Degraded Item** - If photographs or sketches would be helpful in documenting or monitoring the affected item, the Inspector should include them in the inspection report and note on the Data Log Sheet.

.4.7 **Trend Evaluation, Comments and Remarks, including any applicable AR No., MO No., etc.** - The Inspector shall list any applicable remarks or comments for the area/room inspected including comparison of condition with baseline condition and listing any ARs or MOs associated with any nonconforming item. This entry may be completed following the inspection.

.4.8 **Conclusions** - Based on the inspection data obtained and acceptance criteria from the inspection plan, the Inspector shall determine the acceptability of the structure, and recommend any follow-up actions required (repairs, further inspections, monitoring, goal setting, etc.). This entry may be completed following the inspection.

6.7.2 Evaluation Documentation

.1 Inspection reports shall be prepared, reviewed and approved according to the requirements of S0123-XXIV-7.15. The inspection report should include the inspection plan, the inspection data, documentation of evaluations and results.

7.0 RECORDS

7.1 The Civil RE shall submit original records of the inspection report to CDM-SONGS no later than ninety (90) days after the inspection due date. CDM-SONGS shall maintain the records for the operational life of the plant.

7.2 The Civil RE shall transmit a copy of the approved inspection report to Systems Engineering - Maintenance Rule.

7.3 DE Nuclear/Mechanical, Mechanical Systems & Analysis, should maintain electronic file copies of the most recent inspection report, including the inspection plan and inspection data log sheets, pertaining to each structure covered under the MR for Structures program.

DEFINITIONS

- Acceptable Structures - Acceptable structures are capable of meeting their design bases, including the protection and support of maintenance rule systems and components. Acceptable structures have no degradation or may have minor degradation that is not detrimental to the structure meeting its design basis.

- Civil RE - Civil Engineer in DE or any other technically qualified person designated by the DE Mechanical Systems & Analysis FLS as the individual responsible for preparing an inspection report for a specific building.

- Degraded - Any condition which exhibits signs of deterioration or abnormality, e.g., corrosion, cracks, spalled concrete, bent beams, loose or missing bolts, leakage, etc.

- Minor Degradation - Any degraded condition that does not affect the structure's ability to meet its design basis, and if the degraded condition were allowed to continue uncorrected until the next normally scheduled inspection, the structure would still meet its design basis.

- Structure - Includes buildings (concrete walls, floors, ceilings), framing (steel girders, beams, platforms, bracing and columns), supports (HVAC, electrical raceway, piping, equipment) and connections (bolts, welds, base plates, embed plates), equipment mounting pads and skids, doors, cranes, etc.

- Unacceptable Structures - Unacceptable structures are those which are damaged or degraded such that they may not be capable of meeting their design bases, or have significant degradation which could deteriorate such that the structure may not meet its design basis, if not corrected prior to the next normally scheduled inspection.

INSPECTION PLAN OUTLINE

1. SCOPE OF INSPECTION

Instructions: Since each structure is unique, describe the scope of the inspection and include a listing of all areas, floors and/or rooms to be inspected. Include appropriate reference drawing numbers showing the affected areas of the building as necessary. For any inaccessible areas, describe the reason why they are not accessible for inspection and provide justification for bypassing them. Take credit for and reference any existing site preventive maintenance/surveillance programs.

LOG ITEM NO.	ELEVATION	ROOM/AREA NO.	DRAWING	DESCRIPTION	REMARKS

2. METHODOLOGY

Instructions: Describe the manner in which the inspection work shall be performed, i.e., floor by floor, from bottom up, etc. Indicate all method(s) which shall be utilized for the inspection, e.g., visual, NDE examination, etc.

Inspection Methods Utilized: (check as applicable)

VISUAL	NDE/UT	OTHER (specify)

3. ACCEPTANCE CRITERIA

Instructions: Describe the design bases, applicable codes and standards, and any specific criteria to be applied during inspections/evaluations to determine acceptability of the structure.

MAINTENANCE RULE INSPECTION DATA LOG SHEET (Initial Inspections)

LOG SHEET NO.: _____

INSPECTOR NAME: _____ INSPECTION DATE: _____

UNIT: _____ BUILDING: _____ ELEVATION: _____

ITEM NO.	BLDG. AREA/ ROOM NO.	DWG. NO.	DEGRADED ITEM? (Y/N)*	TYPE AND LOC. OF DEGRADED ITEM	NATURE & DESC. OF DEGRADED ITEM	PHOTO/ SKETCH? (Y/N)	COMMENTS & REMARKS	CONCLUSIONS

* If NO, stop here and proceed to the next area. If YES, indicate if condition is baseline under Comments & Remarks for data trending.

MAINTENANCE RULE INSPECTION DATA LOG SHEET (Subsequent Inspections)

ITEM NO.: _____ **UNIT:** _____ **BUILDING:** _____ **ROOM/AREA:** _____

ELEVATION: _____ **REFERENCE DRAWINGS:** _____

INSPECT. NO. AND DATES	INSPECTOR	DEGRADED ITEM? (Y/N)*	TYPE AND LOCATION OF DEGRADED ITEM	DESCRIPTION OF DEGRADED ITEM	PHOTO/ SKETCH? (Y/N)	TREND EVALUATION AND COMMENTS	CONCLUSIONS
1							
2							
3							
4							
5							

* If NO, stop here. If YES, complete remaining fields.

ATTACHMENT 4

VISUAL EXAMINATION OF CONTAINMENT CONCRETE SURFACES

TABLE OF CONTENTS

REFERENCE USE

VISUAL EXAMINATION OF CONTAINMENT CONCRETE SURFACES

1.0 OBJECTIVES

1.1 To evaluate the structural integrity of the Containment concrete shell.

1.2 To perform visual examinations of Containment concrete surfaces are to be performed in accordance with the requirements of:

1.2.1 ASME Code Section XI, 1992 Edition, 1992 Addenda of Subsection IWL (Reference 2.3.2).

1.2.2 All applicable references listed in Section 2.0.

1.3 To ensure that the Containment concrete shell is maintained in accordance with design requirements.

2.0 REFERENCES

2.1 NRC Commitments

2.1.1 Code of Federal Regulations, Title 10 - Energy, Part 50.55a, Codes and Standards (10CFR50.55a), amended by USNRC Final Rule dated August 8, 1996 and September 22, 1999

2.1.2 Units 2/3 Final Safety Analysis Report (FSAR), Section 3.8

2.1.3 Units 2/3 Technical Specification (TS) 3.6.1 and LCS 5-0.103.2.5

2.1.4 Topical Quality Assurance Manual (TQAM), Chapter 7

2.2 Procedures

2.2.1 S023-XXIV-3.8, Containment Structural Integrity Surveillance

2.2.2 S0123-XX-1 ISS2, Action Request/Maintenance Order Initiating and Processing

2.2.3 S0123-XXIV-20.2, Maintenance Rule for Structures

2.3 Other

2.3.1 ASME Section III, Division 2, Code for Concrete Reactor Vessels and Containments, 1992 Edition and Addenda

2.3.2 ASME Code Section XI, 1992 Edition, 1992 Addenda of Subsections IWA and IWL

2.3.3 ANSI/ASNT CP-189-1991, "Standard for Qualification and Certification of Nondestructive Testing Personnel"

2.3.4 ISI Program documents 90063 (Unit 2) and 90064 (Unit 3)

2.3.5 ASNT Recommended Practice No. SNT-TC-1A, "Personnel Qualification and Certification in Nondestructive Testing"

2.3.6 American Concrete Institute (ACI) 201.1R-68, "Guide for Making a Condition Survey of Concrete in Service"

2.3.7 American Concrete Institute (ACI) 349.3R-96, "Evaluation of Existing Nuclear Safety-Related Concrete Structures"

2.3.8 Calculation No. C-257-02.03, Containment Shell Design - Shell Wall

2.3.9 Memorandum For File, by Torrey Yee, dated March 30, 1998, "Concrete Acceptance Criteria for Containment San Onofre Nuclear Generating Station, Units 2 and 3"

3.0 PREREQUISITES

3.1 Before using this document, verify the revision and any issued Temporary Change Notices (TCNs) and/or Editorial Corrections (ECs) are current by using one of the following methods:

3.1.1 Access the Nuclear Document Management System (NDMS) (preferred method).

3.1.2 Check it against a Corporate Documentation Management-SONGS (CDM-SONGS) controlled copy and any issued TCNs/ECs.

3.1.3 Contact CDM-SONGS by telephone or through counter inquiry.

3.1.4 Obtain a user-controlled copy of this procedure from CDM-SONGS or NDMS.

3.2 Personnel performing this surveillance shall be qualified and certified in accordance with ASME Code Section XI, Reference 2.3.2, which references ANSI/ASNT CP-189-1991 (Reference 2.3.3).

3.2.1 Certifications based on SNT-TC-1A (Reference 2.3.4) are valid until recertification is required.

3.2.2 The work shall be performed under the direction of the Responsible Engineer, a Registered Professional Civil or Structural Engineer experienced in evaluating the inservice condition of structural concrete.

4.0 PRECAUTION

4.1 Contact Health Physics prior to climbing to the top of the plant vent stack.

5.0 CHECKLIST

5.1 Attachment 1 shall be used to record and document all examinations.

6.0 PROCEDURE

NOTE: All ASME code categories and item numbers satisfied by this procedure are listed in parenthesis next to the applicable sections.

6.1 Surveillance Requirements

6.1.1 The Containment concrete shell shall be visually inspected in accordance with this procedure.

6.1.2 The examinations shall commence not more than one (1) year prior to the specified dates and shall be completed not more than one (1) year after such dates.

.1 The plans and schedules for performance of this surveillance are contained in Attachment 3.

6.1.3 The visual examiners shall be certified to the VT-1C and VT-3C requirements specified in Reference 2.3.2. Limited certification may be used for examiners limited to concrete.

6.1.4 VT-3C visual examinations are conducted to determine the general structural condition of concrete surfaces of containments by identifying areas of concrete deterioration and distress, such as defined in ACI 201.1R-68 (Reference 2.3.6).

6.1.4.1 The minimum illumination, maximum direct examination distance, and maximum procedure demonstration lower case character height shall be as specified in Reference 2.3.2 for VT-3C visual examination. (See Figure 1)

FIGURE 1

TABLE IWA-2210-1 VISUAL EXAMINATIONS			
Visual Examination	Minimum Illumination, *fc*	Maximum Direct Examination Distance, *ft*	Maximum Procedure Demonstration Lower Case Character Height., *in*
VT-1	50	2	0.044
VT-3	50	4	0.105

6.1.4.2 When the VT-3C examination is performed remotely, the maximum direct examination distance of 4 feet may be extended and the minimum illumination of 50 fc may be decreased.

.3 The remote visual exam should be demonstrated at the chosen distance and illumination to be capable of detecting the conditions or indications for which the visual examination is performed.

6.1.5 Selected areas, such as those that indicate suspect conditions, shall receive a VT-1C examination in accordance with step 6.1.6.

6.1.6 VT-1C visual examinations are conducted to determine concrete deterioration and distress for suspect areas detected by VT-3C.

.1 Minimum illumination, maximum direct examination distance, and maximum procedure demonstration lower case character height shall be as specified in Reference 2.3.2 for VT-1 visual examination. (See Figure 1)

6.1.7 Portions of the concrete surfaces that are covered by the liner, foundation material, or backfill or are otherwise obstructed by adjacent structures, component, parts or appurtenances, are exempt from these visual examination requirements.

6.1.8 The Containment concrete examinations performed in this procedure may be used to satisfy the monitoring requirements of the Maintenance Rule Program for structures per S0123-XXIV-20.2 (Reference 2.2.3).

.1 The evaluation of the Containment's condition and its applicability to the Maintenance Rule Program will be determined in the Action Request process.

6.2 Visual Examinations (Examination Category L-A, Item No. L1.10, L1.11, and L1.12)

6.2.1 The examination shall be performed by, or under the direction of, the Responsible Engineer on the components listed in Attachment 1, and verified by the ALII.

6.2.2 Visual examinations may be performed from floors, roofs, platforms, walkways, ladders, ground surface, or other permanent vantage points, unless temporary close-in access is required to assess suspect conditions.

NOTE: Some examples of degradation mechanisms associated with concrete containments include degradation of dome concrete due to freeze-thaw cycles, and alkali-carbonate reactions; cracking of anchorage concrete; sailing and leaching of concrete; and grease intrusion from tendon ducts.

6.2.3 Concrete surface areas, including coated areas, except those exempted by step 6.1.7, shall be VT-3C visual examined for evidence of conditions indicative of damage or degradation, such as defined in ACI 201.1R-68.

6.2.4 Selected areas, such as those that indicate suspect conditions, shall receive a VT-1C examination in accordance with step 6.1.6. Use Attachment 2 to record the following suspect conditions:

.1 Crack widths between .013 in. and .040 in. shall be noted as existing. Crack widths greater than .040 in. shall be recorded with the measured length, location and frequency.

.2 Leaching, exudation, stalactites, and laitance.

.3 Medium or severe scaling.

.4 Spalls greater than 1 in. in any dimension. Popouts and bugholes greater than 1 in. in diameter.

.5 Concrete deterioration by abrasion damage, blistering, cavitation damage, corrosion, impact and delamination.

.6 Rust stains from reinforcement corrosion & efflorescence.

.7 Exposed reinforcement.

7.0 ACCEPTANCE CRITERIA

7.1 The condition of the concrete surface is acceptable if the Responsible Engineer determines that there is no evidence of damage or degradation sufficient to warrant further evaluation or repair. The following conditions are acceptable and do not need an evaluation:

7.1.1 Crack widths .013 in. or less.

7.1.2 Light scaling.

7.1.3 Spalls, Popouts and bugholes 1 in. in diameter or less.

7.2 Suspect conditions recorded per Sections 6.2.3 and 6.2.4 shall be evaluated for acceptability by the Responsible Engineer.

7.2.1 The evaluation shall include considerations for the design requirements specified in References 2.1.2, 2.3.7, and 2.3.8, and Items 7.2.2.1 to 7.2.2.5.

7.2.2 The evaluation and conclusions shall be included in the Final Report of Section 8.2.

.1 The cause of the condition which does not meet the acceptance standards.

.2 The acceptability of the concrete containment without repair of the item.

.3 Whether or not repair or replacement is required.

.4 If required, the extent, method, and completion date for the repair or replacement.

.5 Extent, nature, and frequency of additional examinations.

7.3 The acceptability of inaccessible areas shall be evaluated when conditions in accessible areas could indicate the presence of degradation in the inaccessible areas.

7.3.1 For each inaccessible area identified with degradation, the following items shall be included in the Final Report and the ISI Summary Report:

.1 A description of the type and estimated extent of degradation, and the conditions that led to the degradation.

.2 An evaluation of each area, and the result of the evaluation.

.3 A description of necessary corrective actions.

8.0 RECORDS

8.1 All data records and documents generated during the performance of this procedure shall be reviewed and approved by the Design Engineering (DE) Supervisor or designee.

8.1.1 If a contractor was used to perform this examination, then the contractor shall submit his final report of the examination to DE for review within 30 days of completion of work activities.

8.1.2 Items that do not meet the acceptance criteria of Section 7.1 shall be documented in accordance with, SO123-XX-1 ISS2, "Action Request/Maintenance Order Initiation and Processing", (Reference 2.2.2).

8.2 A Final Report shall be prepared by, or under the direction of, a Registered Professional Civil Engineer.

8.2.1 The final report shall then be reviewed and approved by a Registered Professional Civil Engineer by placing his stamp on the front of the report.

8.2.2 The final report shall be reviewed by the ANII.

8.2.3 The final report shall be reviewed and approved by the DE Supervisor or designee.

8.3 The final report and all documents generated during performance of this procedure shall be filed in CDM-SONGS.

CONTAINMENT CONCRETE VISUAL EXAMINATION SUMMARY SHEET

Unit: _____ Inspection Date: _____ Sheet: _____

ASME Examination Category: L-A, Concrete Surface; Item No. L1.10, L1.11 and L1.12

ISI ID & AREA NO.	EXAMINATION AREA DESCRIPTION	ELEVATION	DEGRADATION YES/NO (2)	REMARKS (3)	EXAMINATION REPORT FORM (4)
A-1	Basemat	-13.5' to 15'			
B1-1	Buttress No. 1	15' to 30'			
B1-2	Buttress No. 1	30' to 70'			
B1-3	Buttress No. 1	70' to 112'			
B12-1	Buttress No. 1 to No. 2	15' to 30'			
B12-2	Buttress No. 1 to No. 2	30' to 70'			
B12-3	Buttress No. 1 to No. 2	70' to 112'			
B2-1	Buttress No. 2	15' to 30'			
B2-2	Buttress No. 2	30' to 70'			
B2-3	Buttress No. 2	70' to 112'			
B23-1	Buttress No. 2 to No. 3	15' to 30'			
B23-2	Buttress No. 2 to No. 3	30' to 70'			
B23-3	Buttress No. 2 to No. 3	70' to 112'			
B3-1	Buttress No. 3	15' to 30'			
B3-2	Buttress No. 3	30' to 70'			

CONTAINMENT CONCRETE VISUAL EXAMINATION SUMMARY SHEET (Continued)

Unit: _____ Inspection Date: _____ Sheet: _____

ASME Examination Category: L-A, Concrete Surface; Item No. L1.10, L1.11 and L1.12

ISI ID & AREA NO.	EXAMINATION AREA DESCRIPTION	ELEVATION	DEGRADATION YES/NO (2)	REMARKS (3)	EXAMINATION REPORT FORM (4)
B3-3	Buttress No. 3	70' to 112'			
B31-1	Buttress No. 3 to No. 1	15' to 30'			
B31-2	Buttress No. 3 to No. 1	30' to 70'			
B31-3	Buttress No. 3 to No. 1	70' to 112'			
D1-1	Dome	112' to 152'			
D2-1	Dome	152' to 191'			

Notes:
1. Fabrication ID numbers are not applicable to the concrete structure and are not noted.
2. Indicate in "Degradation" column whether suspect conditions were observed.
3. Indicate in "Remarks" column whether examination areas are inaccessible. Other observations may also be noted.
4. Indicate in "Examination Report Form" column the sheet numbers of applicable forms that were recorded.

RECORDED BY: _____ _____
Examiner Date

REVIEWED BY: _____ _____
Responsible Engineer Date

REVIEWED BY: _____ _____
ANII Date

APPROVED BY: _____ _____
DE Supervisor or designee Date

CONCRETE SURFACE VISUAL EXAMINATION REPORT FORM

Sheet _____

EXAMINER'S NAME _____ AREA _____

Instructions:

1. Indicate on the sketch below the location, orientation and extent of any observed indication(s). Use additional sheets and sketches where necessary. Number each indication and Identify in Section B.

2. List the visual aids/tools utilized to perform the examination.

A. Sketch

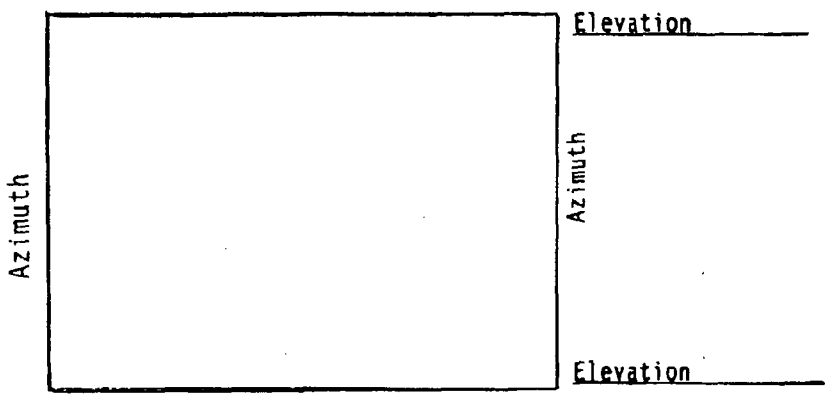

Visual Examination Type: (Circle One) VT-1C VT-3C

B. Indications

_____
_____
_____
_____
_____

C. Tools/Aids

_____
_____
_____
_____
_____

Notes: _____
_____
_____

RECORDED BY: _____ _____
Examiner Date

REVIEWED BY: _____ _____
Responsible Engineer Date

REVIEWED BY: _____ _____
ANII Date

APPROVED BY: _____ _____
DE Supervisor or designee Date

PLAN AND SCHEDULE

Concrete Surface Category L-A, Item L1.10

UNIT	EXAM METHOD	SCHEDULE		
		1ST EXAM Prior to 09/10/01	2ND EXAM ± 1 year	3RD EXAM ± 1 year
2	Visual VT-3C	Aug. 1998	Aug. 2008	Aug. 2018
3	Visual VT-3C	Aug. 1998	Aug. 2008	Aug. 2018

NOTES:
1) Schedule is based on IWL-2421.
2) VT-1C is required only for the concrete surfaces that indicate suspect conditions in accordance with procedure steps 6.1 and 6.2.