Technology MATTERS™

Short Summary Presentation to NRC
April 18 2007

CCI strainer testing experience with emphasis on chemical testing

CCI test facilities

- **Small size vertical test loop**
  (used for Head loss testing incl. Chemical)
- **Large size horizontal test loop**
  (used for Head loss testing incl. Chemical)
- **Multifunctional horizontal test loop**
  (used for Head loss incl. Chemical, Bypass, Transport, Flume Sedimentation)
- **Special purpose test loops**
  (used for vortex prevention, hydrodynamic loads etc.)

© 2003. CCI – Control Components Inc. CCI is the Valve Doctor ®. All rights reserved.

Small size loop for few representative pockets

© 2003. CCI – Control Components Inc. CCI is the Valve Doctor ®. All rights reserved.

Full size loop for an entire strainer module

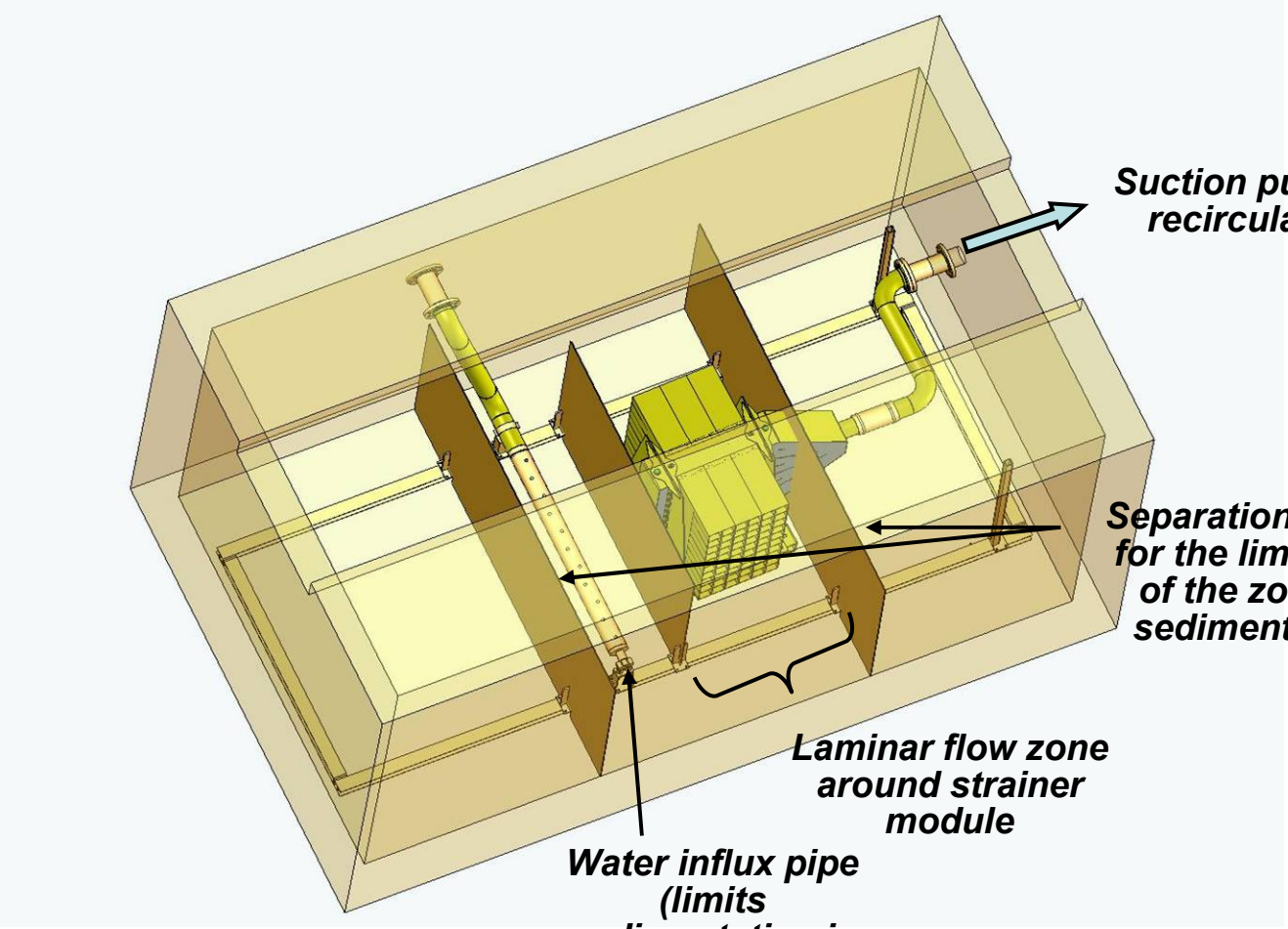

© 2003. CCI – Control Components Inc. CCI is the Valve Doctor ®. All rights reserved.

Multi Functional Test Loop

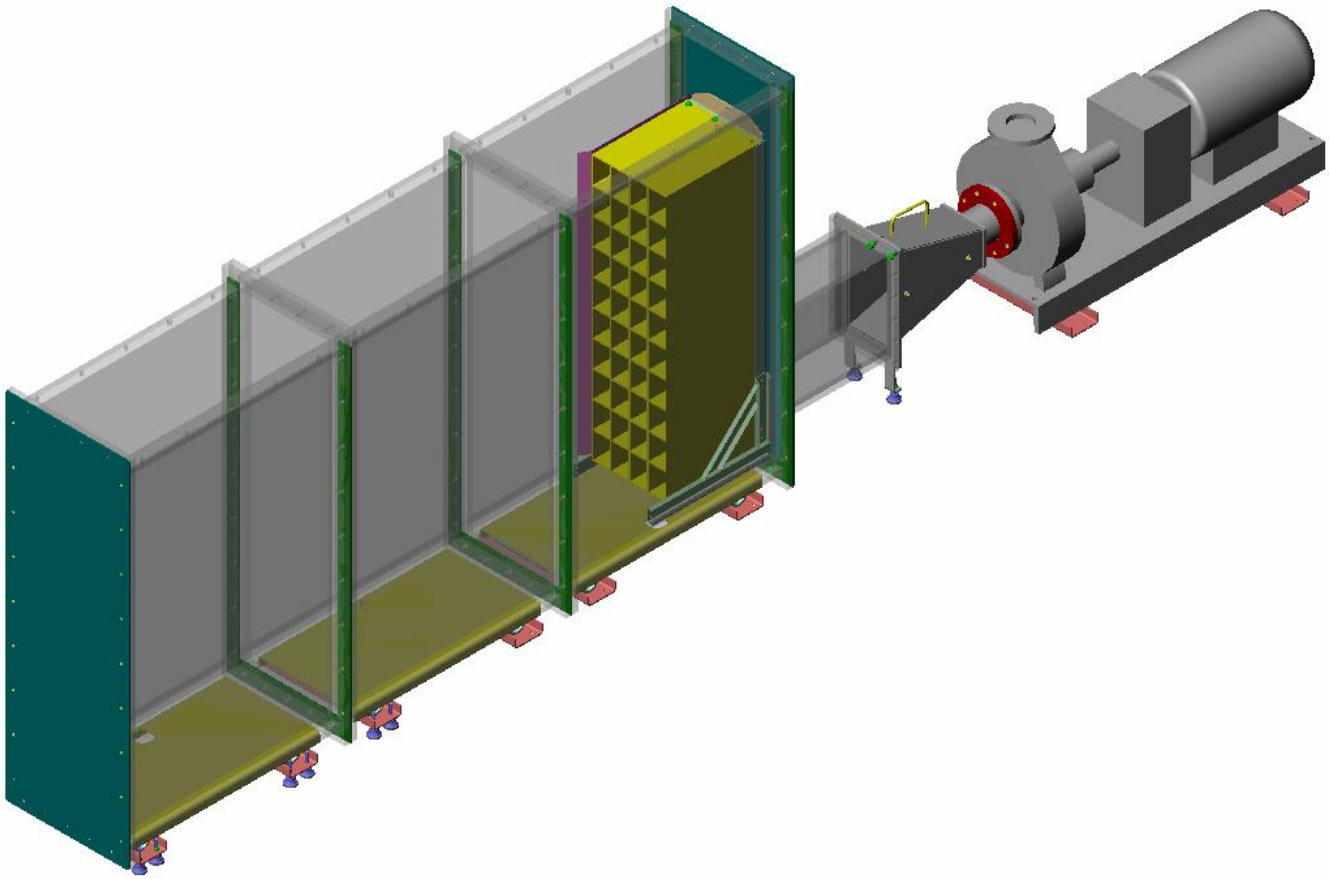

© 2003. CCI – Control Components Inc. CCI is the Valve Doctor ®. All rights reserved.

CCI testing experience

Type of Test Loop	Small	Large	MultiPurpose
Number of pockets (typically)	6	120	40
Flow rate capacity (gpm, approx.)	440	440	880
Experience in total test days for USA plants	30	80	190
Experience in chemical testing (from above)	10	5	65

© 2003. CCI – Control Components Inc. CCI is the Valve Doctor ®. All rights reserved.

Chemical testing highlights

- Chemistry according ICET # 1 (for 3 plants so far)
- Room temperature
- Total Precipitate amounts set by WCAP methodology and filtering surface scaling
- Use of test loop as particle generator
  - avoiding analyzing one step more (for separate part.gen.)
  - precipitate concentration in loop closer to real plant
  - direct control/check of loop chemistry by sampling
- Pre-analyses by lab bench top testing
  - chemistry (effects of tap water and other debris)
  - filterability
  - settling rate
  - viscosity
  - precipitate size distribution

© 2003. CCI – Control Components Inc. CCI is the Valve Doctor ®. All rights reserved.

Chemistry testing steps for head loss

- Establishment of boric acid concentration
- Start of head loss testing with all other debris
- Slow addition of Sodium Aluminate rises pH
- Immediate precipitation of Aluminum Hydroxide in required quantity for filtering surface scaling
- Similar steps by adding calcium chloride and sodium silicate
- Buffering additionally to reach wanted pH with Sodium Hydroxide, if required
- Continuation of head loss testing up to a predefined termination criteria
- Sampling of loop water at regular intervals for lab analysis
- Integration of chemical head loss results in final plant head loss report

© 2003. CCI – Control Components Inc. CCI is the Valve Doctor ®. All rights reserved.

Example of Chemistry testing results for a US plant

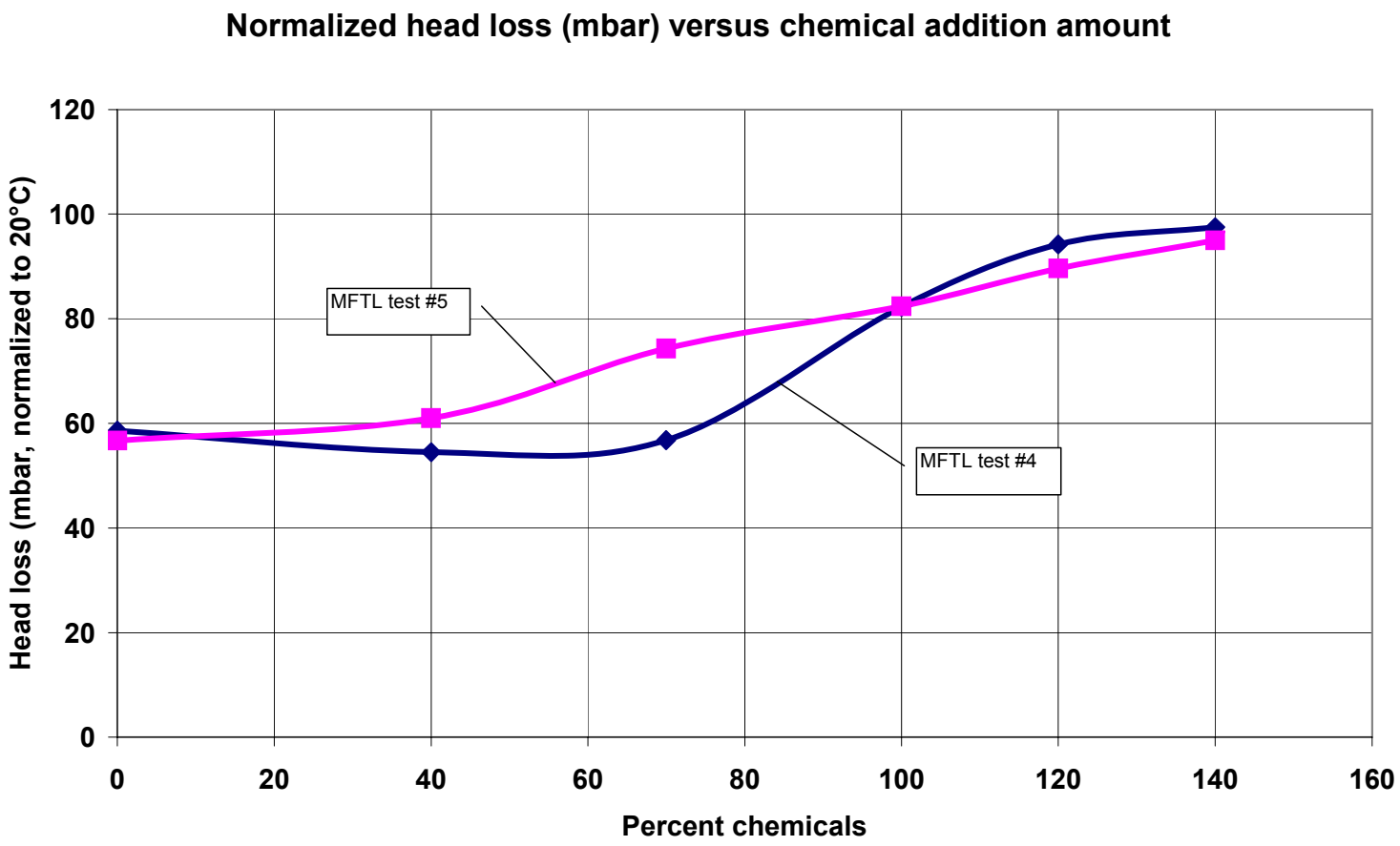

© 2003. CCI – Control Components Inc. CCI is the Valve Doctor ®. All rights reserved.

Overview of plants for chemical testing

- Already performed :
  - Byron / Braidwood
  - Salem
  - Palo Verde
- In planning phase :
  - Oconee
  - Ginna
  - Calvert Cliffs
  - ANO
  - DC Cook
  - + non-US plants

© 2003. CCI – Control Components Inc. CCI is the Valve Doctor ®. All rights reserved.