UNITED STATES
NUCLEAR REGULATORY COMMISSION
REGION IV
611 RYAN PLAZA DRIVE, SUITE 400
ARLINGTON, TEXAS 76011-4005

April 26, 2007

EA 07-047

R. T. Ridenoure
Vice President
Omaha Public Power District
Fort Calhoun Station FC-2-4 Adm.
P.O. Box 550
Fort Calhoun, NE 68023-0550

Dear Mr. Ridenoure:

SUBJECT: MEETING SUMMARY FOR REGULATORY CONFERENCE

On April 16, 2007, representatives of Omaha Public Power District met with NRC personnel in the Region IV office located in Arlington, Texas, to discuss the apparent violation identified in NRC Inspection Report 05000285/2006018. The conference was held at the request of the licensee. The apparent violation occurred when a containment spray isolation valve (HCV-345) was found to have been incorrectly installed for an entire operating cycle. Omaha Public Power District presented information regarding the significance, cause, and corrective actions associated with the apparent violation. The meeting attendance list and a copy of the licensee presentation are included as Enclosures 1 and 2.

In accordance with 10 CFR 2.390 of the NRC's "Rules of Practice," a copy of this letter and its enclosures will be available electronically for public inspection in the NRC's Public Document Room or from the Publicly Available Records (PARS) component of the NRC's Agencywide Documents Access and Management System (ADAMS). ADAMS is accessible from the Electronic Reading Room page of the NRC's public Web site at http://www.nrc.gov/reading-rm/adams.html.

Sincerely,

Jeff A. Clark, Chief
Project Branch E
Division of Reactor Projects

Enclosures: as stated

cc w/Enclosures:
Joe I. McManis, Manager - Licensing
Omaha Public Power District
Fort Calhoun Station FC-2-4 Adm.
P.O. Box 550
Fort Calhoun, NE 68023-0550

David J. Bannister
Manager - Fort Calhoun Station
Omaha Public Power District
Fort Calhoun Station FC-1-1 Plant
P.O. Box 550
Fort Calhoun, NE 68023-0550

James R. Curtiss
Winston & Strawn
1700 K Street NW
Washington, DC 20006-3817

Chairman
Washington County Board of Supervisors
P.O. Box 466
Blair, NE 68008

Julia Schmitt, Manager
Radiation Control Program
Nebraska Health & Human Services
Dept. of Regulation & Licensing
Division of Public Health Assurance
301 Centennial Mall, South
P.O. Box 95007
Lincoln, NE 68509-5007

Daniel K. McGhee
Bureau of Radiological Health
Iowa Department of Public Health
Lucas State Office Building, 5th Floor
321 East 12th Street
Des Moines, IA 50319

Enclosure 1

REGULATORY CONFERENCE MEETING ATTENDANCE	
LICENSEE/FACILITY	Omaha Public Power District/Fort Calhoun Station
DATE/TIME	April 16, 2007 - 1:00 pm
LOCATION	U.S. Nuclear Regulatory Commission, Region IV Training Conference Room 611 Ryan Plaza Drive, Suite 400 Arlington, TX 76011
NAME (PLEASE PRINT)	**ORGANIZATION**
Jeff Reinhart	OPPD - Fort Calhoun Station
Joe McManis	OPPD - Fort Calhoun Station
Dave Bannister	OPPD - Fort Calhoun Station
Alan Hackerott	OPPD
TOM GIEBELHAUSEN	OPPD
Ron Johansen	OPPD - FORT CALHOUN STATION
LLOYD SCHAATZ	OPPD - FORT CALHOUN STATION
John David Hanna	US NRC -
Jeff Clark	NRC
Art Howell	NRC
Pat Gwynn	NRC
Dwight Chamberlain	NRC
Russ Bywater	NRC

REGULATORY CONFERENCE MEETING ATTENDANCE

LICENSEE/FACILITY	Omaha Public Power District/Fort Calhoun Station
DATE/TIME	April 16, 2007 - 1:00 pm
LOCATION	U.S. Nuclear Regulatory Commission, Region IV Training Conference Room 611 Ryan Plaza Drive, Suite 400 Arlington, TX 76011

NAME (PLEASE PRINT)	ORGANIZATION
Victor Dricks	NRC
Wayne Walker	NRC
Michael Vasquez	NRC
John Kirkland	NRC
See-Meng Wong	NRC (via VTC)
Jeff Circle	NRC (via VTC)

Enclosure 2

Fort Calhoun Station Regulatory Conference Potential White Issue

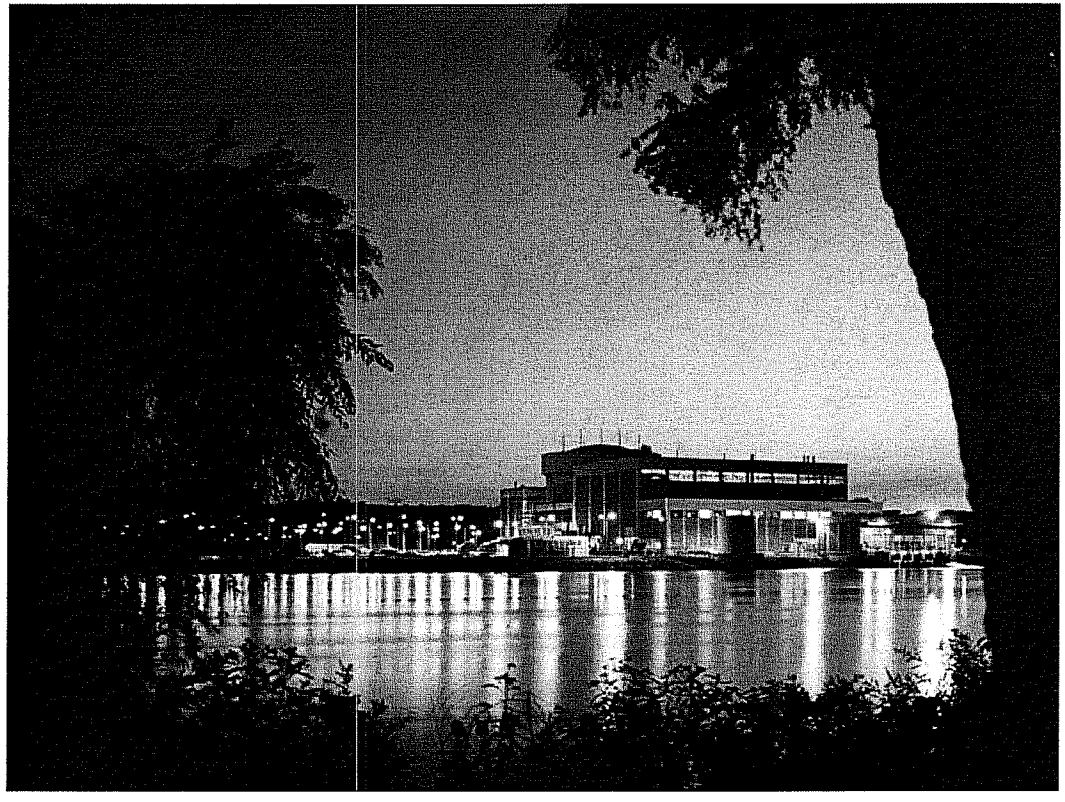

April 16, 2007

Agenda

- Agenda Introduction (Reinhart)
- Problem Overview (Bannister)
- Corrective Actions Taken (Bannister)
- Risk Discussion (Hackerott)
- Basis for Green Significance (Hackerott)
- Closing (Reinhart)

Problem Overview

- Valve Disk Found Installed Incorrectly on a CS Header Valve in 2006 RFO (HCV-345)
- Occurred During Maintenance from Previous Outage
- Effect:
  - 20% open instead of 100% open
  - 33% closed instead of 100% closed during normal operations
- Choice Letter Issued March 2007

Causal Analysis

Root Cause 1:

- Procedure allowed flexibility of performing selected portions of procedure without providing adequate annotation of risk important steps that could impact final valve alignment

Root Cause 2:

- Procedure did not provide detailed acceptance criteria of verification to ensure proper valve operation

Corrective Actions

- Immediately Verified HCV-344 Status
- HCV-345 Repaired & Verified to be in Correct Configuration
- Procedures Revised and Validated on Mock-Up
- Specific Acceptance Criteria Provided for Verifying the Valve Open / Closed as Part of Final Reassembly
- JIT Training Before Working These Valves

Organization of Technical Presentation

- Addresses Information Requested in Choice Letter
- Emphasizes Risk Associated with Diversion Flow Path
- Event Tree Developed Based upon Applicable Emergency Operating Procedures (EOPs)

Risk Assessment Overview

- Two Types of Scenarios Contribute to Severe Accident Risk
- More Important Scenario of the Two was Identified by FCS Staff
- Scientech Assisted OPPD in Completion of Analysis
- OPPD to Present Additional Information That Supports a “Green” Finding

Scenario 1: Spray Containment

- HCV-345 Would Have Opened 20%
- Sufficient to Perform Safety Function
- Small Impact upon CDF and LERF
- Agreement Between NRC and FCS on Scenario as Noted in Choice Letter

Scenario 2: Diversion Flow Path

- Possible Loss of RCS Mass
- Could Have Occurred During Establishment of Shutdown Cooling
- Scenario Identified by FCS PRA Staff
- Remainder of Presentation Focuses on Scenario 2

Simplified One-Line

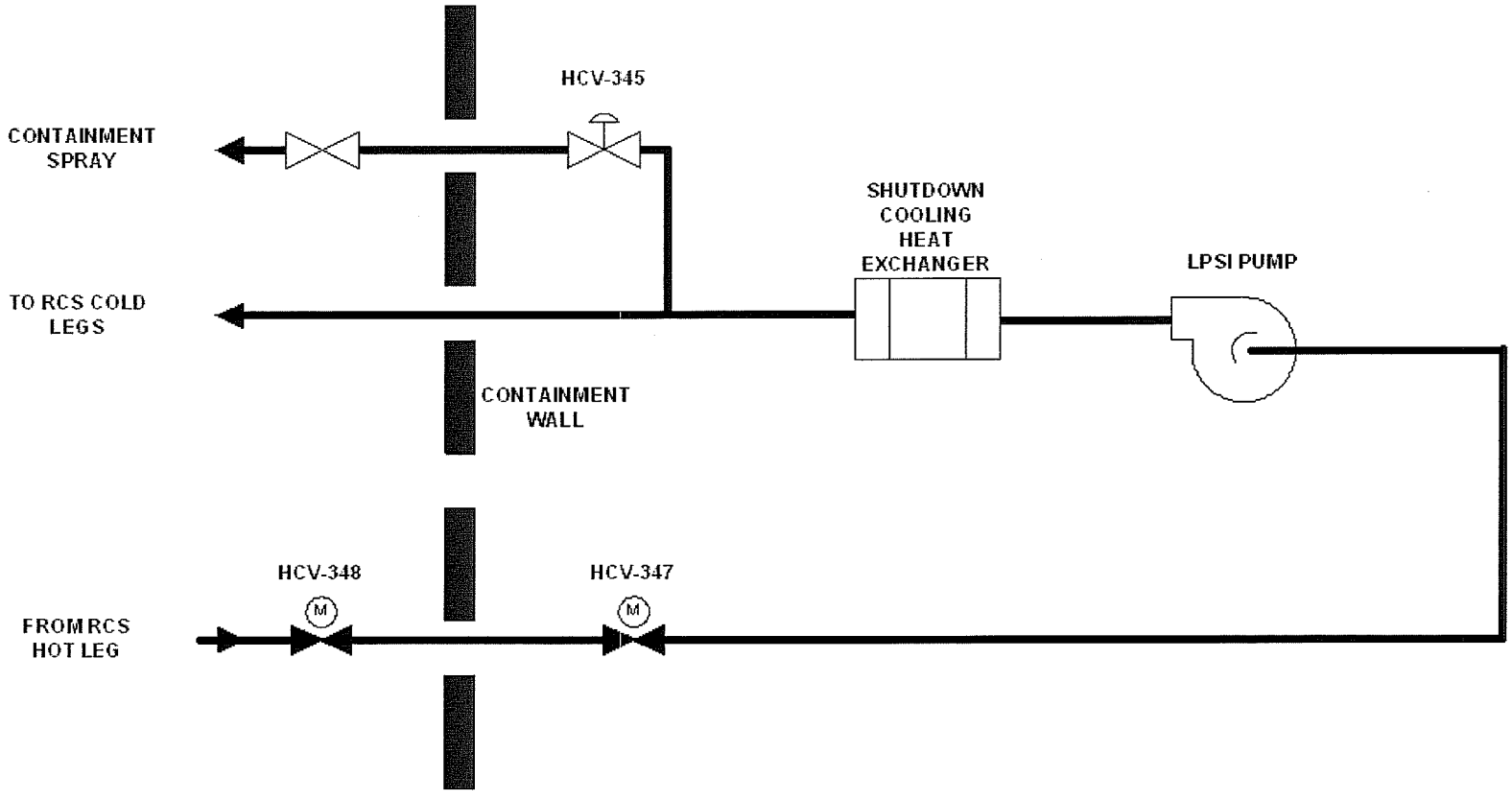

Scenario 2 Details

NRC Choice Letter Requested:

- Results of CDF and LERF Estimates
- Frequency of Initiating Events
- Operator Response, Success Paths, and Human Reliability Analysis
- External Event Initiators

Initiating Event Categories

1. Operating instructions direct establishment of shutdown cooling
2. Dry containment sump before shutdown cooling
3. RAS occurs before shutdown cooling
4. Wet containment sump before shutdown cooling

Initiating Events

Not Included in CDF if:

- Shutdown cooling per operating instruction; Closing manual valve prevents diversion flow path (Category 1)
- Sump is dry – operator recognition of diversion almost certain (Category 2)
- Recirculation is reached before shutdown cooling; all end states successful (Category 3)

Initiating Events Included (Category 4)

RCP Seal Cooler ISLOCA Inside Containment	3.00E-4/year
Small LOCA	6.79E-3/year
UHE Inside Containment	3.54E-3/year
Total	1.06E-2/year

Event Tree for Categories 3 and 4

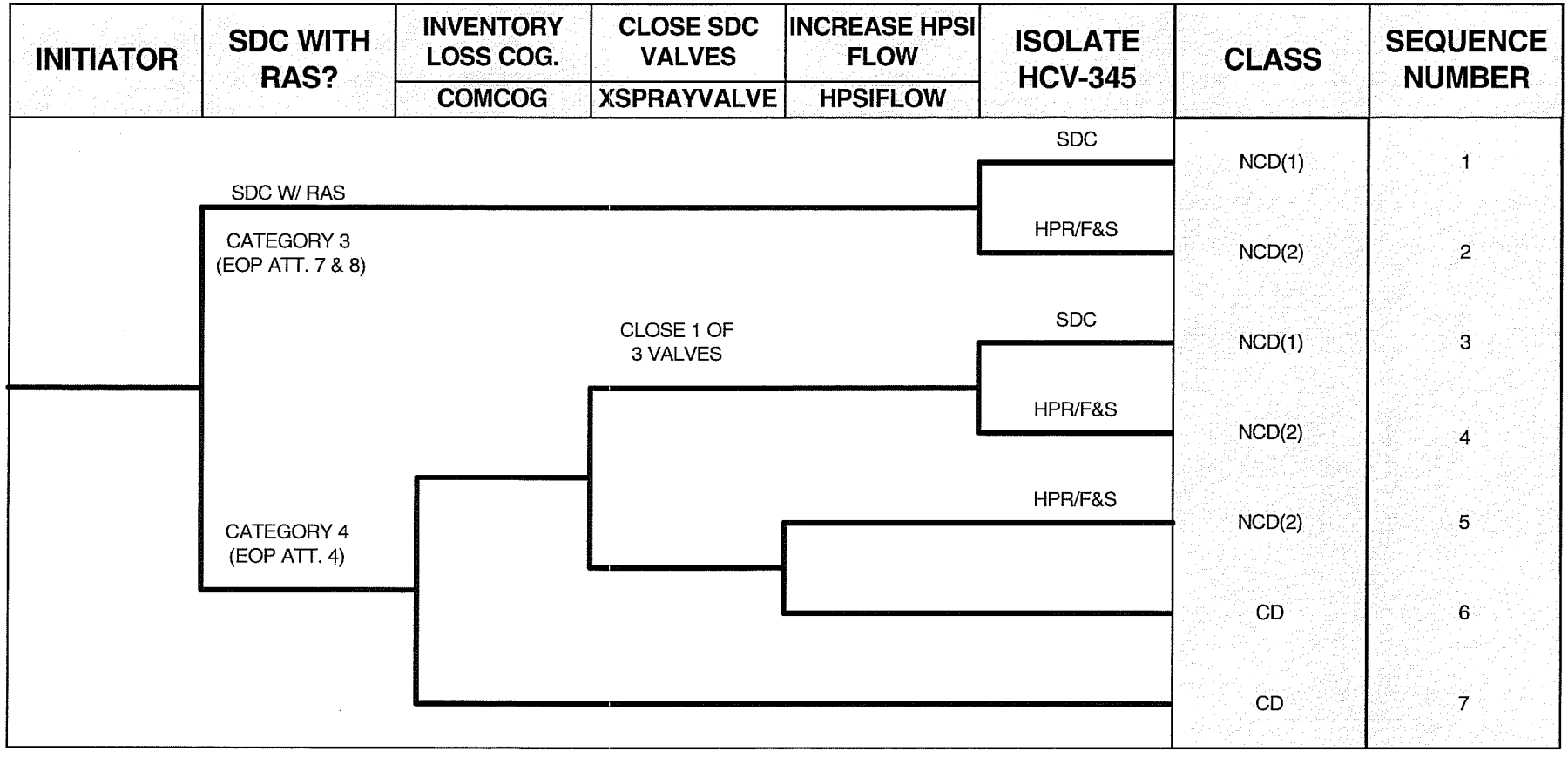

SDC = shutdown cooling

RAS = Recirculation Actuation Signal

HPR = high pressure recirculation

F&S = feeding and steaming S/G's

Category 3 Success Paths

EOP Attachments 7 & 8:

- Post-recirculation operation of SI system
- Portion of flow intended for shutdown cooling would be diverted to spray
- No core damage (NCD)

Category 3 Success Paths

Sequence 1: Operators Recognize / Isolate Diversion Flow Path

- Does not use RCS hot leg flow path
- Shutdown cooling established using one shutdown cooling heat exchanger
- Decay heat removal maintained with shutdown cooling
- Inventory control maintained with existing HPSI flow rate

Sequence 1

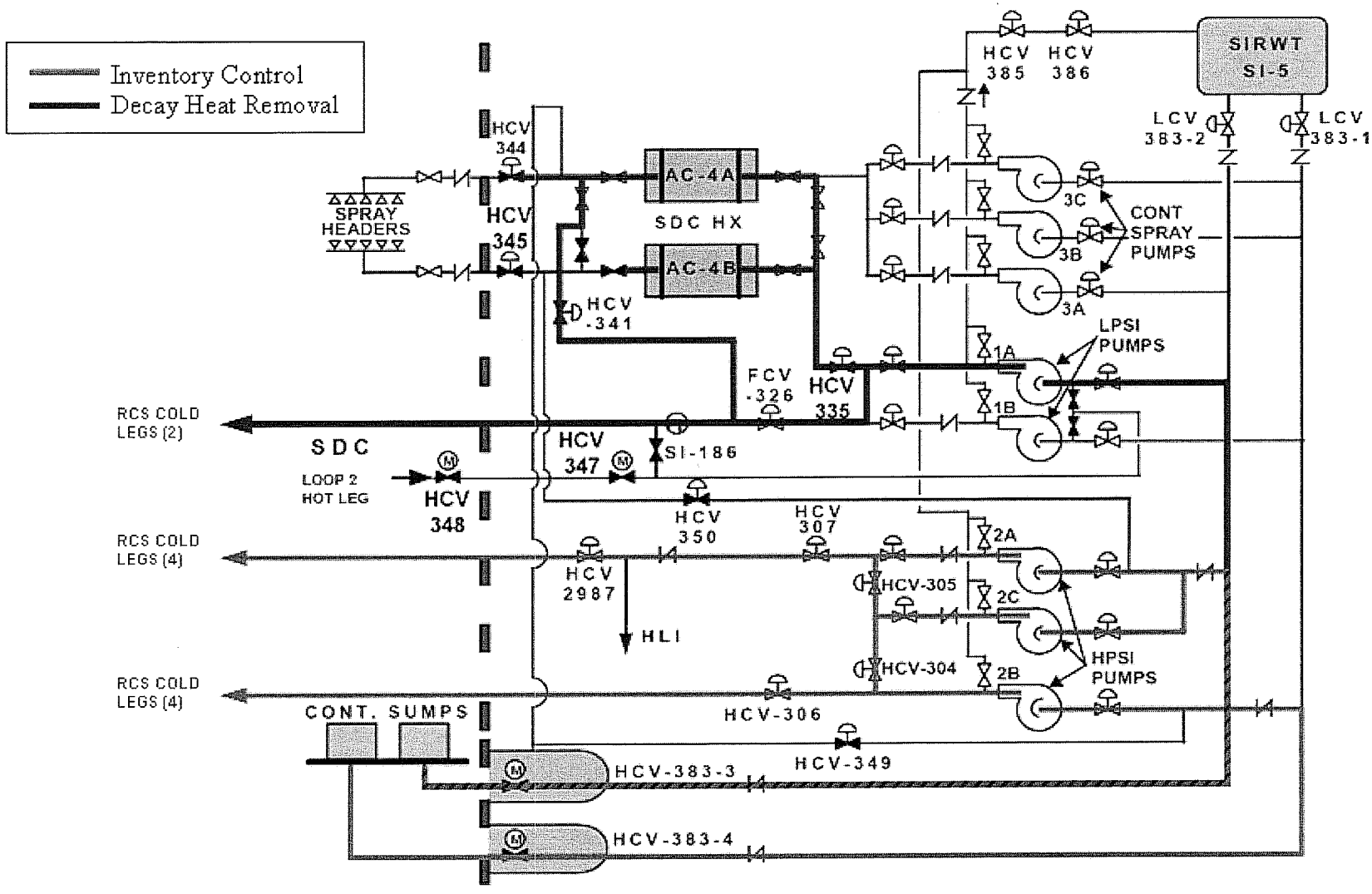
Inventory Control
Decay Heat Removal
SIRWT
SI-5
HCV 385
HCV 386
LCV 383-2
LCV 383-1
HCV 344
HCV 345
SPRAY HEADERS
AC-4A
AC-4B
SDC HX
HCV -341
3C
3B
3A
CONT SPRAY PUMPS
LPSI PUMPS
1A
1B
FCV -326
HCV 335
RCS COLD LEGS (2)
SDC
LOOP 2 HOT LEG
HCV 347
SI-186
HCV 348
HCV 350
HCV 307
RCS COLD LEGS (4)
HCV 2987
HLI
HCV-305
HCV-304
2A
2C
2B
HPSI PUMPS
RCS COLD LEGS (4)
CONT. SUMPS
HCV-306
HCV-349
HCV-383-3
HCV-383-4

Category 3 Success Paths

Sequence 2: Failure To Isolate HCV-345 Flow Path

- Does not use RCS hot leg flow path
- Recirculation continues uninterrupted
- Decay heat removal maintained by containment spray / secondary cooling
- Inventory control maintained with existing HPSI flow rate

Sequence 2

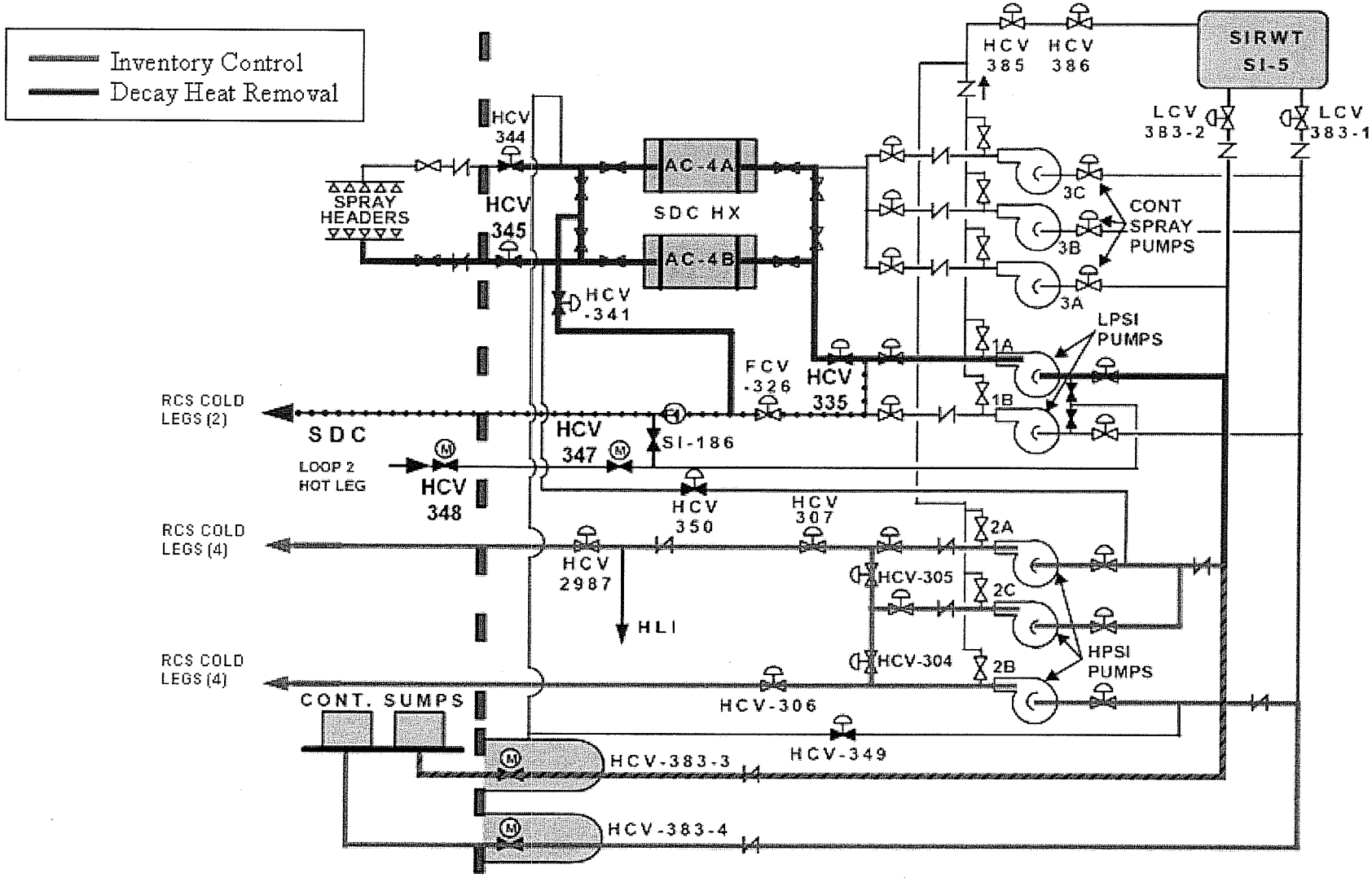
Inventory Control
Decay Heat Removal
HCV 385
HCV 386
SIRWT SI-5
LCV 383-2
LCV 383-1
HCV 344
AC-4A
SPRAY HEADERS
HCV 345
SDC HX
AC-4B
3C
3B
3A
CONT SPRAY PUMPS
HCV -341
LPSI PUMPS
1A
1B
FCV -326
HCV 335
RCS COLD LEGS (2)
SDC
HCV 347
SI-186
LOOP 2 HOT LEG
HCV 348
HCV 350
HCV 307
RCS COLD LEGS (4)
2A
HCV 2987
HCV-305
2C
HLI
HCV-304
2B
HPSI PUMPS
RCS COLD LEGS (4)
CONT. SUMPS
HCV-306
HCV-349
HCV-383-3
HCV-383-4

Category 4 Success Paths

EOP Attachment 4:

- Attempt to initiate shutdown cooling without recirculation
- Core damage prevented if operators recognize loss of RCS inventory, and either isolate diversion or increase HPSI flow rate
- Credit increasing HPSI flow as a success path evaluated since Choice Letter (new information)

Category 4 Success Paths

Sequence 3: Operators Recognize and Isolate Diversion Flow Path

- Shutdown cooling established using one shutdown cooling heat exchanger
- Decay heat removal maintained with shutdown cooling
- Inventory control maintained with HPSI
- Multiple valves available in case of hardware failure

Sequence 3

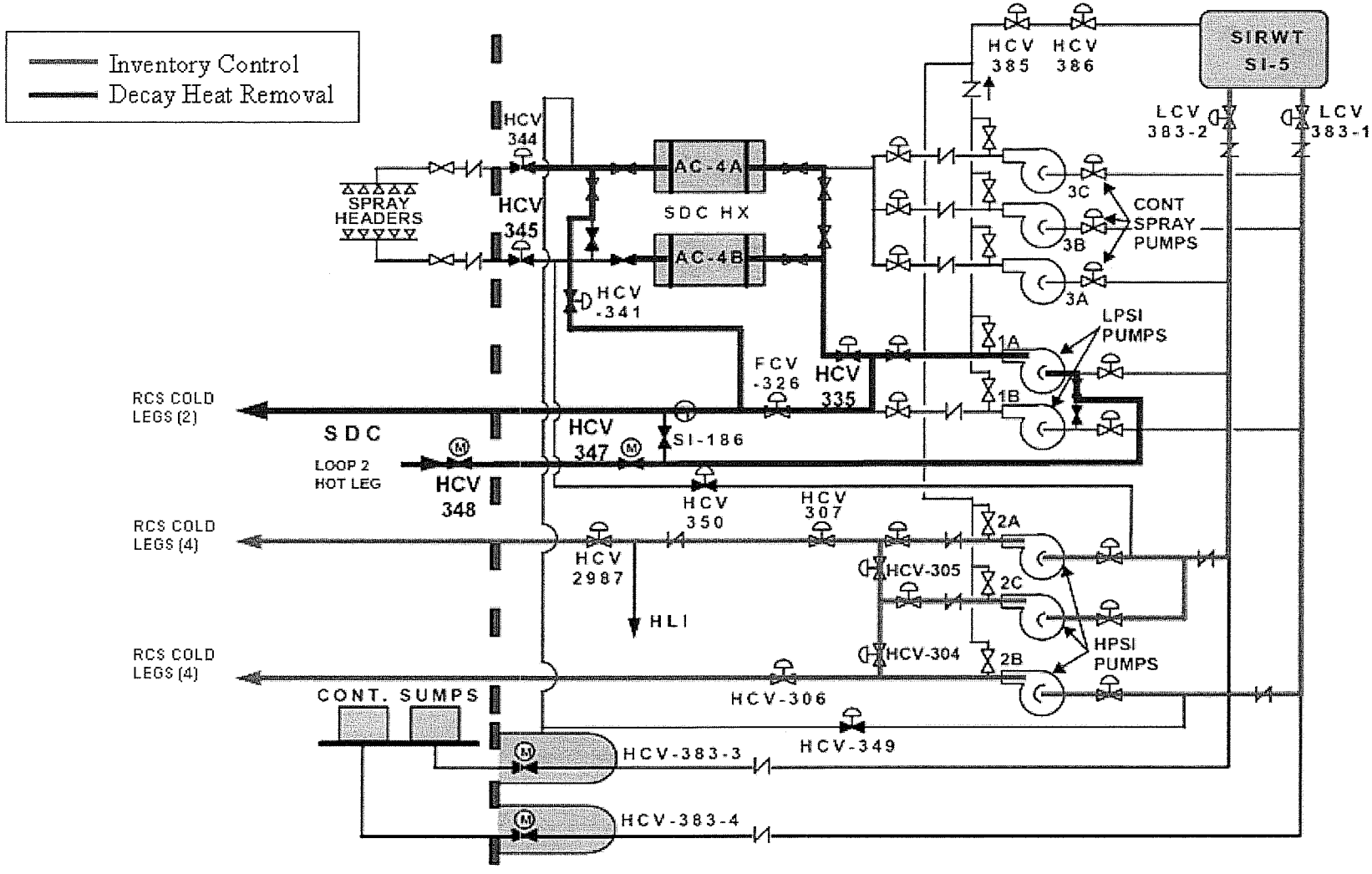
Inventory Control
Decay Heat Removal
SIRWT
SI-5
HCV 385
HCV 386
LCV 383-2
LCV 383-1
HCV 344
HCV 345
SPRAY HEADERS
AC-4A
AC-4B
SDC HX
HCV -341
3C
3B
3A
CONT SPRAY PUMPS
LPSI PUMPS
1A
1B
FCV -326
HCV 335
RCS COLD LEGS (2)
SDC
LOOP 2 HOT LEG
HCV 347
SI-186
HCV 348
HCV 350
HCV 307
RCS COLD LEGS (4)
HCV 2987
HLI
2A
2C
2B
HCV-305
HCV-304
HPSI PUMPS
RCS COLD LEGS (4)
CONT. SUMPS
HCV-306
HCV-349
HCV-383-3
HCV-383-4

Category 4 Success Paths

Sequence 4: Operators Close Shutdown Cooling Valves

- Failure to isolate HCV-345
- Shutdown cooling cannot be established
- Recirculation occurs
- Decay heat removal maintained by containment spray / secondary cooling

Sequence 4

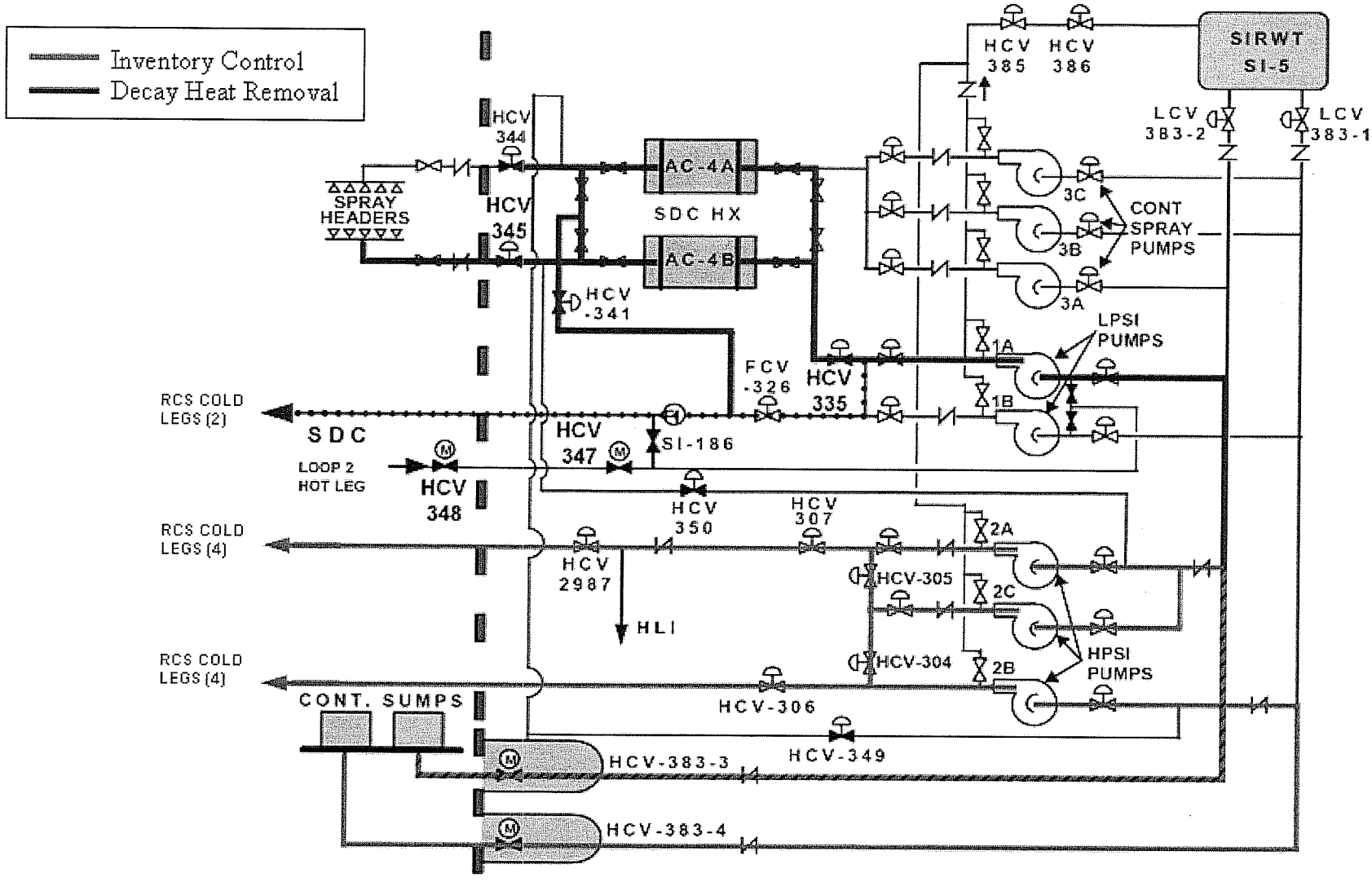
Inventory Control
Decay Heat Removal
HCV 385
HCV 386
SIRWT SI-5
LCV 383-2
LCV 383-1
HCV 344
AC-4A
SDC HX
AC-4B
SPRAY HEADERS
HCV 345
HCV -341
3C
3B
3A
CONT SPRAY PUMPS
LPSI PUMPS
1A
1B
FCV -326
HCV 335
RCS COLD LEGS (2)
SDC
HCV 347
SI-186
LOOP 2 HOT LEG
HCV 348
HCV 350
HCV 307
RCS COLD LEGS (4)
2A
HCV 2987
HCV-305
2C
HLI
HCV-304
2B
HPSI PUMPS
RCS COLD LEGS (4)
CONT. SUMPS
HCV-306
HCV-349
HCV-383-3
HCV-383-4

Category 4 Success Paths

Sequence 5: Operators Fail to Close Shutdown Cooling Valves

- HPSI stop-and-throttle criteria would not be met
- Operators maintain RCS inventory by raising HPSI flow rate
- Recirculation occurs
- Decay heat removal maintained by containment spray / secondary cooling

Sequence 5

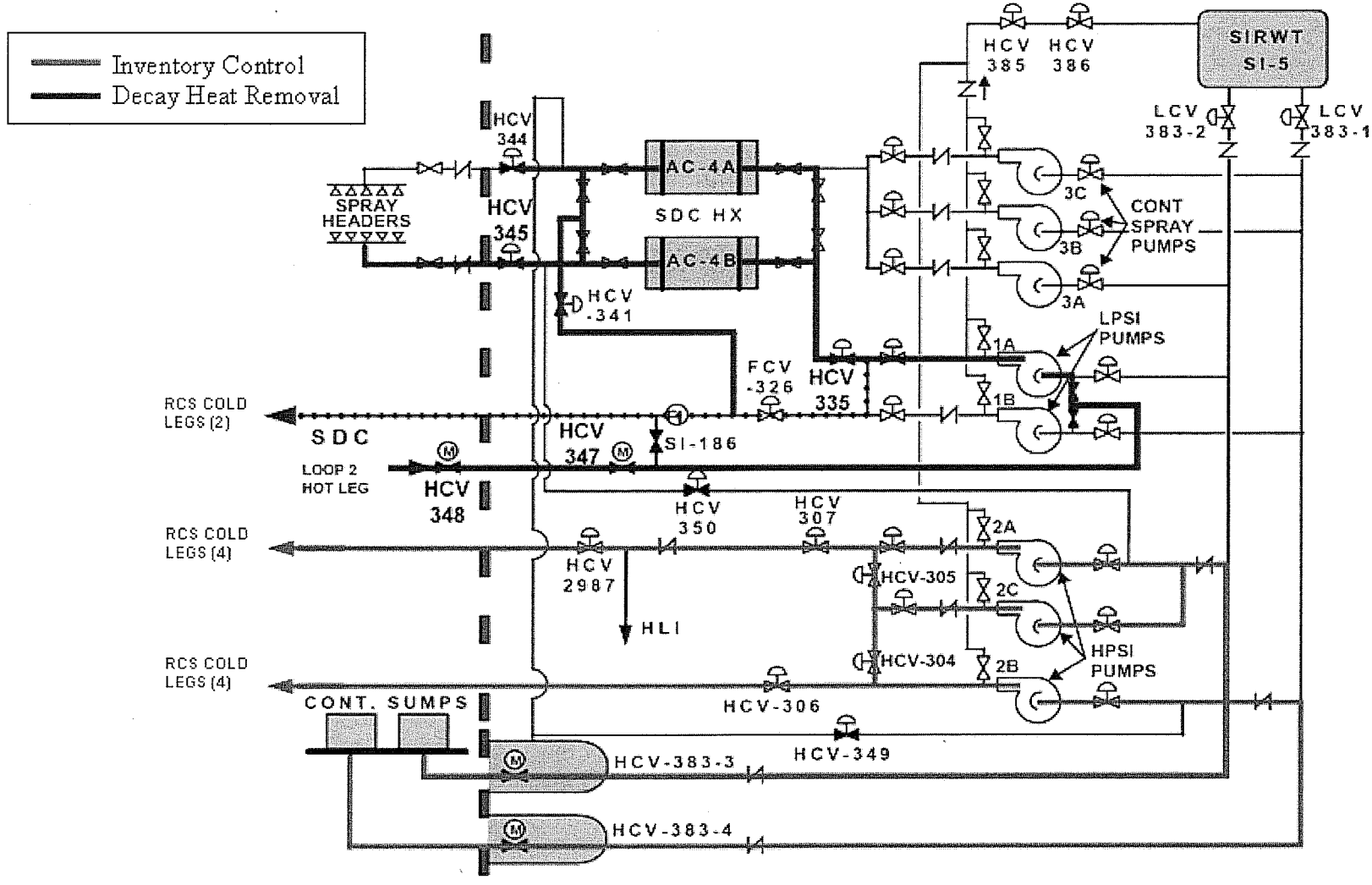
Inventory Control
Decay Heat Removal
SIRWT
SI-5
HCV 385
HCV 386
LCV 383-2
LCV 383-1
HCV 344
HCV 345
SPRAY HEADERS
AC-4A
AC-4B
SDC HX
HCV -341
3C
3B
3A
CONT SPRAY PUMPS
LPSI PUMPS
1A
1B
FCV -326
HCV 335
RCS COLD LEGS (2)
SDC
LOOP 2 HOT LEG
HCV 347
SI-186
HCV 348
HCV 350
HCV 307
RCS COLD LEGS (4)
HCV 2987
HLI
2A
2C
2B
HCV-305
HCV-304
HPSI PUMPS
RCS COLD LEGS (4)
CONT. SUMPS
HCV-306
HCV-349
HCV-383-3
HCV-383-4

Validation of Event Tree

- **Diversion Flow Path With Dry Sump (Category 2)**
  - Simulator scenario run shortly after discovery of HCV-345 issue
  - HCV-345 diversion issue not widely known
  - Containment sump alarms caused operators to rapidly stop LPSI pump
  - Discussion during table-top scenarios
  - "Dry Sump" initiators not included, as described earlier

Validation of Event Tree

- **Diversion Flow Path With Wet Sump (Categories 3 & 4)**
  - Table-top scenarios
  - Operators confident they would:
    - Recognize lowering pressurizer level
    - Isolate shutdown cooling
    - Raise HPSI flow rate in response to lowering pressurizer level

Operator Response, Success Paths, and HRA

- Human Reliability Analysis (HRA)
  - OPPD probability of failing to isolate diversion (initial analysis): 6.0E-5
  - NRC probability of failing to isolate diversion: 4.1E-4
  - OPPD probability of failing to isolate diversion (following further analysis by OPPD / Scientech): 4.0E-4

Operator Response, Success Paths, and HRA

NRC / OPPD Comparison of Analysis:

- Essentially match for isolation of diversion flow path
- OPPD / Scientech includes second success path to increase HPSI flow rate
- Common cognitive for both success paths
- Moderate dependency for both success paths
- Final OPPD / Scientech human error probability = 3.37E-5

CDF and LERF Estimates

Core Damage Frequency (CDF):

- CDF = ($\sum$ initiating event frequencies) X (combined human error probability)
- Internal Events CDF

  (1.06E-2/yr) X (3.37E-5) = 3.6E-7/yr

CDF and LERF Estimates

Large Early Release Frequency (LERF):

- SGTR
  - Mitigation includes depressurizing to < MSSV setpoint
  - Mitigation completed before initiating shutdown cooling
  - Therefore, no potential release path for LERF
- Negligible contribution from unisolated RCP seal cooler

External Events

- Seismic
  - Unlikely contributor to Categories 3 and 4 since affected SSCs have HCLPF > 0.3g
  - CDF contribution is approximately 2.8E-8/yr
- Flood, Wind, Toxic, etc.
  - No initiating events identified that significantly affect scenarios

External Events

- Fire
  - Most initiating events are passive, not fire-induced
  - Possible fire-induced loss of component cooling water leading to RCP seal LOCA (Category 4)
  - Possible fire-induced loss of off-site power (Category 2)
  - CDF contribution = 3.6E-8/yr

Conservative Assumptions in Analysis

- LOCAs with Initial HPSI Flow Rate > 200 gpm Self-Limiting, but Included
- All Uncontrolled Heat Extractions Upstream of MSIVs Included
- Thermal Hydraulic Analyses Assumed Four Hours to Shutdown Cooling

Summary

- Initiating Events with Dry Containment Sump Need Not be Included
- External Events Contribution is Small
- **Scenario 2 (Diversion Flow Path)**
  CDF = Internal + External = 4.2E-7/Yr

Basis for Green Significance

- NRC Initially Determined Potentially White Safety Significance
- OPPD & Scientech Quantified Additional Success Path
- Analysis Concluded ICDP Well Into Green Band (4.2E-07)

Closing