Chapter 11: Waste Disposal and Radiation Protection System

Table of Contents

Section	Title	Page
11.1	WASTE DISPOSAL SYSTEM	11.1-1
11.1.1	Design Basis	11.1-1
11.1.1.1	Control of Releases of Radioactivity to the Environment	11.1-1
11.1.2	System Design and Operation	11.1-2
11.1.2.1	System Description	11.1-3
11.1.2.2	Steam Generator Blowdown System	11.1-5
11.1.2.3	Gas Processing	11.1-6
11.1.2.4	Solids Processing	11.1-8
11.1.2.5	Components	11.1-8
11.1.2.6	Laundry and Hot Shower Tanks	11.1-8
11.1.2.7	Reactor Coolant Drain Tank	11.1-9
11.1.2.8	Waste Holdup Tank	11.1-9
11.1.2.9	Sump Tank and Pumps	11.1-9
11.1.2.10	Gas Decay Tanks	11.1-9
11.1.2.11	Waste Gas Compressors	11.1-9
11.1.2.12	Waste Condensate Tanks	11.1-9
11.1.2.13	Baler	11.1-10
11.1.2.14	Nitrogen Manifold	11.1-10
11.1.2.15	Hydrogen Manifold	11.1-10
11.1.2.16	Gas Analyzer	11.1-10
11.1.2.17	Deaerated Drains Tank	11.1-10
11.1.2.18	SGB Heat Exchangers	11.1-11
11.1.2.19	SGBT Heat Exchanger	11.1-11
11.1.2.20	SGBT Flash Tank Filters	11.1-11
11.1.2.21	SGBT Monitor Tanks	11.1-11
11.1.2.22	SGBT Holdup Tank	11.1-11
11.1.2.23	SGBT Ion Exchanger Pre-Filter	11.1-11
11.1.2.24	SGBT Ion Exchangers	11.1-11
11.1.2.25	SGBT Ion Exchanger Post Filters	11.1-11
11.1.2.26	Pumps	11.1-12
11.1.2.27	Piping	11.1-12
11.1.2.28	Valves	11.1-12

Chapter 11: Waste Disposal and Radiation Protection System

Table of Contents

Section	Title	Page
11.1.3	Design Evaluation	11.1-12
11.1.3.1	Liquid Wastes	11.1-12
11.1.3.2	Gaseous Wastes	11.1-13
11.1.3.3	Solid Wastes	11.1-13
11.1.4	Minimum Operating Conditions	11.1-13
11.1	References	11.1-14
11.2	RADIATION PROTECTION	11.2-1
11.2.1	Design Basis	11.2-1
11.2.1.1	Monitoring Radioactivity Releases	11.2-1
11.2.1.2	Monitoring Fuel and Waste Storage Areas	11.2-1
11.2.1.3	Fuel and Waste Storage Radiation Shielding	11.2-2
11.2.1.4	Protection Against Radioactivity Release from Spent Fuel and Waste Storage Areas	11.2-2
11.2.2	Primary and Secondary Shielding	11.2-2
11.2.2.1	Design Basis	11.2-2
11.2.2.2	Primary Shielding	11.2-4
11.2.2.3	Secondary Shielding	11.2-4
11.2.2.4	Fuel Handling Shielding	11.2-5
11.2.2.5	Auxiliary Shielding	11.2-5
11.2.2.6	Shielding Design	11.2-5
11.2.2.7	Secondary Shielding	11.2-6
11.2.2.8	Fuel Handling Shielding	11.2-6
11.2.2.9	Auxiliary Shielding	11.2-7
11.2.3	Radiation Monitoring System	11.2-7
11.2.3.1	Main Process Radiation Monitoring System	11.2-8
11.2.3.2	Containment or Containment System Vent - Air Particulate Monitor (R-11)	11.2-11
11.2.3.3	Containment or Containment System Vent - Radiogas Monitor (R-12)	11.2-11
11.2.3.4	Containment System Vent Air Activity Monitor (R-21)	11.2-13
11.2.3.5	Auxiliary Building Vent Monitors (R-13, R-14)	11.2-14
11.2.3.6	Condenser Air Ejector Gas Monitor (R-15)	11.2-15
11.2.3.7	Control Room Ventilation Monitor (R-23)	11.2-15
11.2.3.8	Residual Heat Removal Pump Pit Monitor (R-22)	11.2-15

Chapter 11: Waste Disposal and Radiation Protection System

Table of Contents

Section	Title	Page
11.2.3.9	Containment Fan Coil Water Monitor (R-16)	11.2-16
11.2.3.10	Component Cooling System Liquid Monitor (R-17)	11.2-16
11.2.3.11	Waste Disposal System Liquid Effluent Monitor (R-18)	11.2-16
11.2.3.12	Steam Generator Blowdown System Liquid Sample Monitor (R-19)	11.2-16
11.2.3.13	Service Water Monitor (R-20)	11.2-17
11.2.3.14	Auxiliary Process Radiation Monitoring System	11.2-17
11.2.3.15	Area Radiation Monitoring System	11.2-19
11.2.3.16	Main Steam Line Primary to Secondary Leakage Monitors (R-42, R-43)	11.2-22
11.2.3.17	Radiation Monitoring System-Control Room Panel	11.2-23
11.2.3.18	Recording	11.2-23
11.2.3.19	Monitor Ranges	11.2-23
11.2.3.20	Operating Conditions	11.2-23
11.2.3.21	Radiation Protection Program	11.2-23
11.2.3.22	Personnel Bio-Assay Program	11.2-24
11.2.3.23	Personnel Protection Equipment	11.2-24
11.2.3.24	Personnel Respiratory Protection	11.2-24
11.2.3.25	Action Levels	11.2-26
11.2.3.26	Facilities and Access Provisions	11.2-26
11.2.3.27	Instrumentation	11.2-27
11.2.4	Evaluation	11.2-28
11.2.5	Minimum Operating Conditions	11.2-29
11.2.6	Tests and Inspections	11.2-29
11.2	References	11.2-29
11.3	RADIOACTIVE MATERIALS SAFETY	11.3-1
11.3.1	Materials Safety Program	11.3-1
11.3.1.1	Sources	11.3-1
11.3.1.2	Fuel	11.3-1
11.3.1.3	Incore Detectors	11.3-2
11.3.2	Facilities and Equipment	11.3-2
11.3.3	Personnel and Procedures	11.3-2

Chapter 11: Waste Disposal and Radiation Protection System

List of Tables

Table	Title	Page
11.1-1	Waste Disposal System Performance Data (Historical – for information only)	11.1-15
11.1-2	Waste Disposal Components Code Requirements	11.1-16
11.1-3	Component Summary Data	11.1-17
11.1-4	Liquid Discharge To Waste Disposal Discharges, gal (Historical – for information only)	11.1-21
11.1-5	Liquid Release By Isotope Volume Discharged, Gal - 1,681,100 (Historical – for Information Only)	11.1-22
11.1-6	Annual Gaseous Release By Isotope (Historical – for information only)	11.1-24
11.2-1	Shielding Design Zone Classifications	11.2-30
11.2-2	Primary Shielding Neutron Fluxes and Design Parameters Calculated Neutron Fluxes - Core Midplane	11.2-31
11.2-3	Secondary Shielding Design Parameters	11.2-32
11.2-4	Accident Shielding Design Parameters	11.2-33
11.2-5	Fuel Handling Shielding Design Parameters	11.2-34
11.2-6	Principal Auxiliary Shielding	11.2-35
11.2-7	Radiation Monitoring System Channel Data	11.2-36
11.2-8	Detecting Medium and Conditions	11.2-44
11.2-9	Residual Heat Removal Loop Radiation Sources and Evaluation Parameters	11.2-46

Chapter 11: Waste Disposal and Radiation Protection System

List of Figures

Figure	Title	Page
11.1-1	Waste Disposal System Flow Diagram (Sheet 1 of 2)	11.1-25
11.1-2	Waste Disposal System Flow Diagram (Sheet 2 of 2)	11.1-26
11.1-3	Steam Generator Blowdown Treatment System - Flow Diagram	11.1-27
11.1-4	Flow Diagram Steam Generator Blowdown System	11.1-28
11.1-5	Reactor Plant Misc. Vents, Drains and Sump Pump Piping - Flow Diagram (Sheet 1 of 2)	11.1-29
11.1-6	Reactor Plant Misc. Vents, Drains and Sump Pump Piping - Flow Diagram (Sheet 2 of 2)	11.1-30
11.1-7	Liquid Waste Disposal Flow Diagram	11.1-31
11.1-8	Waste Gas Processing	11.1-32
11.2-1	Radiation Control Area - Basement Floor	11.2-49
11.2-2	Radiation Control Area - Mezzanine Floor	11.2-50
11.2-3	Radiation Control Area - Operating Floor	11.2-51
11.2-4	Radiation Control Area - Miscellaneous Floor	11.2-52
11.2-5	Maximum Radiation Levels Surrounding RHR Pipe	11.2-53
11.2-6	Sensitivity of Dose to Activity in the RHR Water	11.2-54

Intentionally Blank

Chapter 11 Waste Disposal and Radiation Protection System

11.1 WASTE DISPOSAL SYSTEM

11.1.1 Design Basis

11.1.1.1 Control of Releases of Radioactivity to the Environment

Criterion: The facility design shall include those means necessary to maintain control over the plant radioactive effluents, whether gaseous, liquid, or solid. Appropriate holdup capacity shall be provided for retention of gaseous, liquid, or solid effluents, particularly where unfavorable environmental conditions can be expected to require operational limitations upon the release of radioactive effluents to the environment. In all cases the design for radioactivity control must be justified:

1. on the basis of 10 CFR 20 requirements, for both normal operations and for any transient situation that might reasonably be anticipated to occur, and
2. on the basis of 10 CFR 100 dosage level guidelines for potential reactor accidents of exceedingly low probability of occurrence (GDC 70).

Liquid, gaseous, and solid waste disposal facilities are designed so that discharge of effluents and off-site shipments are in accordance with applicable governmental regulations.

Radioactive fluids entering the Waste Disposal System are collected in tanks until determination of subsequent treatment can be made. They are sampled and analyzed to determine the quality of radioactivity, with an isotopic breakdown as necessary to meet 10 CFR 20 requirements. Liquid wastes are processed as required and then released under controlled conditions. The system is designed and operated to ensure that radioactive waste streams are appropriately monitored and have safety features incorporated to preclude releases in excess of the limits of 10 CFR 20.

The bulk of the radioactive liquids discharged from the Reactor Coolant System (RCS) are processed by the boron recycle portion of the Chemical and Volume Control System (CVCS). This design minimizes liquid processed by the Waste Disposal System. The small quantities of liquid, which are input to the Waste Disposal System, are processed to remove most of the radioactive material. The liquid is then discharged to the Auxiliary Building Standpipe, which directs fluids to the Circulating Water System discharge.

Radioactive gases are pumped by compressors through a manifold to one of the gas decay tanks where they are held a suitable period of time for decay. Cover gases in the Waste Gas System are reused to minimize gaseous wastes. During normal operation, gases are discharged

when required at a controlled rate from these tanks through the monitored plant vent. The system is provided with discharge controls.

The spent resins from the demineralizers, the filter cartridges and compressible wastes are packaged and stored on site until shipment offsite for disposal.

11.1.2 System Design and Operation

The Waste Disposal System Process Flow Diagrams are shown in Figure 11.1-1 through Figure 11.1-5, and Performance Data are given in Table 11.1-1. The Liquid Waste Disposal Flow Diagram is given in Figure 11.1-7 and the Gaseous Waste Disposal Flow Diagram is given in Figure 11.1-8.

The Waste Disposal System collects and processes all potentially radioactive reactor plant wastes for removal from the plant site within limitations established by applicable governmental regulations. Fluid wastes are sampled and analyzed to determine the quantity of radioactivity, with an isotopic breakdown processed, as required, and then released under controlled conditions. Radiation monitors are provided to maintain surveillance over the release operation, and a permanent record of activity releases is provided by radiochemical analysis of known quantities of waste. The system is capable of processing all wastes generated during continuous operation of the Reactor Coolant System assuming that fission products escape to the reactor coolant by diffusion through defects in the cladding of 1 percent of the fuel rods.

The claim that the radwaste system is capable of processing said wastes during operation assuming defects in 1 percent of the fuel rods, is based on the waste evaporator expected efficiency. This efficiency was never achieved as waste evaporator operations were terminated shortly after initial plant start-up. The alternate method for liquid radwaste processing, as modeled using ANSI/ANS-18.1 (standardized reactor coolant source code), Regulatory Guide 1.112, and NUREG-0017 (NRC GALE code), and consistent with 10 CFR 50.34a, 50.36a, and Appendix I guidance for liquid radwaste system design and described in Reference 3, can meet this restrictive criteria if the assumptions of Reference 3 are met. The key assumptions are that routine dilution streams continue such that the radionuclide concentration of waste water awaiting processing is ¼ that of the reactor coolant and that collectively, a minimum of 7.5 days are available for collecting, recirculating, and processing the liquid radwaste. The above assessment remains valid for operation at the uprated core power level of 1772 MWt (Reference 4).

At least two valves must be manually opened to permit the initiation of a discharge of liquid or gaseous waste from the Waste Disposal System. The control valve will trip closed on a high effluent radioactivity level signal. Default alarm setpoints of the effluent monitors are given in the Offsite Dose Calculation Manual. Once a discharge is in progress, at least one valve must be manually opened to release any other tank contents. In addition, the release of more than one tank at a time is administratively controlled, and all contents discharged pass through the radiation monitor.

As secondary functions, system components supply hydrogen and nitrogen to Reactor Coolant System components as required during normal operation, and provide facilities to transfer fluids from inside the Containment to other systems outside the Containment.

The system is controlled from a central panel in the Auxiliary Building. Malfunction of the system is alarmed in the Auxiliary Building, and annunciated in the Control Room. All system equipment is located in or near the Auxiliary Building, except for the reactor coolant drain tank and pumps which are located in Containment.

11.1.2.1 System Description

11.1.2.1.1 Liquid Processing

The Liquid Waste Disposal System collects, processes, stores and disposes of radioactive liquid waste originating in the plant.

The major sources of liquid waste are:

- Reactor Coolant System drainage
- Deaerated equipment drains and leaks
- Aerated equipment drains and leaks
- Chemical laboratory drains
- Decontamination area drains
- Radioactive laundry and hot shower drains
- Sampling System

To facilitate storage, processing and disposal, the system is designed to segregate various waste streams at their point of collection into the following categories:

- Boron recycled distillate (deaerated waste)
- Miscellaneous rad waste drains (aerated waste)
- Laundry and hot shower waste

Part of the boron recycled distillate waste stream (deaerated waste) is the RCS drainage, which is transferred directly to the CVCS holdup tank or waste holdup tank for processing.

Sources of this drainage include:

- Reactor coolant loops
- Pressurizer relief tank

- Reactor coolant pump secondary seals
- Excess letdown (during startup)
- Accumulators
- Reactor vessel flange leakoffs
- Refueling cavity drains
- Valve leakoffs

These liquids flow to the reactor coolant drain tank or suction of the reactor coolant drain tank pumps and are discharged either directly to the CVCS holdup tanks or to the waste holdup tank by the reactor coolant drain pumps. These pumps can also return water from the refueling cavity to the RWST. There is one reactor coolant drain tank with two reactor coolant drain tank pumps located inside of the Containment.

The remaining deaerated liquid waste originates in the CVCS charging and letdown paths and from miscellaneous equipment drains. These liquid waste streams are collected and handled in a closed system to minimize the hydrogen explosion hazard and prevent the escape of gaseous radioactivity. This is accomplished by collecting deaerated waste in a closed piping system that drains to a deaerated drain tank. The deaerated drain tank is isolated from the atmosphere by a flexible diaphragm-type seal. From the tanks the deaerated waste is pumped to the CVCS holdup tanks for processing through the Boron Recovery System (see Section 9.2). The CVCS distillate is pumped from the monitor tanks to the Waste Disposal System through flow meters and discharged in the environment.

The miscellaneous rad waste drain stream (aerated waste) originates primarily from the floor drains, aerated equipment drains and leaks, and the decontamination area drains. Aerated waste is collected by gravity drainage in the basement sump and floor drains to the aerated waste sump tank or waste holdup tank. Equipment and floor drains above the ground floor-drain by gravity into the sludge interceptor tank. From the sump tank, waste is pumped to the waste holdup tank by the sump tank pumps. Waste from the sludge interceptor tank is pumped by the sludge interceptor pump through sludge interceptor filters (4) into the waste holdup tank. Waste from the hot sample station and hot chemical laboratory is also drained to the waste holdup tank. The tank's contents are pumped by the waste evaporator feed pump to the Blowdown Treatment System for processing and eventual release to the environment.

The activity level of waste liquid from the laundry and hot shower area is usually low enough to permit discharge from the site without processing. These wastes are collected in one-of-two laundry and hot shower tanks. Liquids collected in the laundry and hot shower tanks can, depending on the need, be prepared for proper release to the environment, routed to the waste condensate tanks for consolidation and storage pending proper release to the environment, or

routed to the waste hold-up tank for radwaste processing. If the activity is low enough the wastes are pumped through a flow meter and radiation monitor that is used for all releases of potentially radioactive liquids and discharged to the environment. Upon sensing high radiation the discharge valve in that flow path is automatically closed.

During plant operation, radioactively contaminated oils are generated from various equipment operating in the plant. The largest source of the contaminated oil is the reactor coolant pump lubricating oil, which is periodically changed during preventive maintenance. 10 CFR 20 allows licensees to incinerate radioactively contaminated oils on site provided that the total effluent from the facility conforms to the requirements of 10 CFR 50, Appendix I. At KPS, this waste oil is incinerated in the plant's heating boiler.

The Blowdown Treatment System was originally designed to handle nominal flow from the Steam Generator Blowdown System for treatment prior to release to the environment. With high blowdown flow rates (100 gpm maximum per steam generator) this is not possible.

The Blowdown Treatment System is used to treat and remove radioactivity from the Liquid Waste System. Liquid from the waste holdup tank is pumped by the waste evaporator feed pump to one of the two Steam Generator Blowdown Treatment (SGBT) holdup tanks. The effluent is then pumped using a SGBT holdup tank transfer pump (one per tank), through a pre-filter and SGBT ion exchanger and SGBT ion exchanger post filter to a SGBT monitor tank. A sample of the SGBT monitor tank contents is analyzed for radioactivity and, depending on the results of the analyses, discharged through a radiation monitor, using a SGBT monitor tank discharge pump to the environment or held in the tank for further processing.

Although the radiochemical analysis forms the basis for recording activity releases, the waste radiation monitor provides surveillance and control over the operation by automatically closing the discharge valve if the liquid activity level exceeds a preset value.

11.1.2.2 Steam Generator Blowdown System

The Steam Generator Blowdown (SGB) System provides a means of maintaining proper chemistry control in the steam generator. The system has three distinct modes of operation, dependent upon reactor operating level (Figure 11.1-4). The three modes are:

- Blowdown to the circulating water discharge via the blowdown tank.
- Blowdown to the circulating water discharge via the condensate heat recovery system.
- Blowdown to the holdup or monitor tanks via the blowdown tank, due to primary to secondary leakage.

During Reactor startup (Mode I), prior to condensate pump operation, steam generator blowdown flows to the Steam Generator Blowdown (SGB) tank, and into the Auxiliary Building standpipe for discharge to Lake Michigan.

Once a condensate pump is operating, steam generator blowdown can be placed in Mode II. Blowdown from each steam generator flows in respective parallel paths through motor-operated isolation valves, two SGB heat exchangers in series, and a high-pressure drop valve and polishing filters. The normal flow path for the blowdown from this point is to the Auxiliary Building standpipe. A portion of condensate from the condensate pump discharge header is routed through the shell side of the SGB heat exchangers and back into the hotwell of the condenser.

When power is greater than 50 percent, or the condensate outlet temperature can be maintained at least 20°F less than the heater drain tank saturation temperature, the condensate flow is lined up to the heater drain tank prior to mixing with the feed water instead of being returned to the condenser hotwell. The steam generator blowdown flow varies from 15 gpm to a maximum of 100 gpm per steam generator. The blowdown is cooled to approximately 100°F in the SGB heat exchangers, giving up its heat to the condensate, and the pressure is reduced to 40 psig by the hydrop valve prior to entering the Auxiliary Building standpipe and for discharge to Lake Michigan.

If there is primary to secondary leakage, blowdown can be routed to the Blowdown Treatment System (Mode III). The Blowdown Treatment System allows blowdown to be processed as liquid radioactive waste.

Radioactivity is monitored in the steam generators using either RE-15 (air ejector off gas) or RE-19 (steam generator blowdown). Laboratory analysis is used for confirmation. Upon receipt of a high radiation alarm, the blowdown isolation valves close and blowdown stops. A steam generator primary to secondary leak could precipitate this event.

11.1.2.3 Gas Processing

During plant operations, gaseous wastes originate from:

- Degassing reactor coolant discharge to the CVCS,
- Displacement of cover gases as liquids accumulate in various tanks,
- Miscellaneous equipment vents and relief valves, and
- Sampling operations and automatic gas analysis for hydrogen and oxygen in cover gases.

The Nitrogen and Hydrogen Supply Systems are designed to provide a supply of gas to various components. Operation is identical for both systems. Each system consists essentially of multiple banks of gas cylinders, dual manifolds, and a branch line to the various pieces of equipment. Each branch line has an isolation valve and a pressure control. The hydrogen main

supply header is equipped with a security shutoff valve, which will close in the event of a low downstream pressure indicating a possible line or component failure.

Two independent manifolds are provided for each system, one for normal operation and one spare. Each manifold has a pressure regulator, pressure indicator, a common pressure switch and a common alarm. When the gas cylinder banks supplying the operating manifold are low in pressure, an alarm will sound. The exhausted gas cylinders are removed from service and another group of cylinders are placed in service.

Most of the gas received by the Waste Disposal System during normal operation is cover gas displaced from the CVCS holdup tanks as they fill with liquid. Since this gas must be replaced when the tanks are emptied during processing, facilities are provided to return gas from the decay tanks to the holdup tanks. A backup supply from the nitrogen header is provided for makeup if return flow from the gas decay tanks is not available. To prevent the formation of a combustible mixture of gases, components discharging to the vent header system are restricted to those containing no air or aerated liquids and the vent header itself is designed to operate at a slight positive pressure (normal operating range is 0.5 psig to 2.0 psig) to prevent inleakage. Out-leakage from the system is minimized by using diaphragm valves, bellows seals, self-contained pressure regulators and soft-seated packless valves throughout the radioactive portions of the system.

Gases vented to the vent header flow to the waste-gas compressor suction header. The two compressors are operated as necessary to maintain a normal range of pressure in the vent header. From the compressors, gas flows to one-of-four gas decay tanks. The control arrangement on the gas decay tank inlet header allows the operator to place one tank in service and to select one tank for backup. When the tank in service becomes pressurized to 110 psig, a pressure signal automatically closes the inlet valve to the tank, opens the inlet valve to the backup tank and sounds an alarm to alert the operator so he may select a new backup tank. Pressure indicators are provided to aid the operator in selecting the backup tank.

Gas held in the decay tanks can either be returned to the CVCS holdup tanks, or discharged to the atmosphere provided the radioactive waste gases are at acceptable levels. Generally, the last tank to receive gas will be the first tank emptied back to the holdup tanks, which permits the maximum decay time before releasing gas to the environment. However, the header arrangement at the tank inlet gives the operator the option to fill, reuse or discharge gas to the environment simultaneously without restricting the operation of the other tanks. During degassing of the reactor coolant prior to a cold shutdown, for example, it may be desirable to pump the gas purged from the volume control tank into a particular gas decay tank and isolate that tank for decay rather than reuse the gas in it. This is done by aligning the controls to open the inlet valve to the desired tank and closing the outlet valve to the reuse header. Simultaneously, one of the other tanks can be opened to the reuse header if desired, while another is discharged to atmosphere. Before a tank is discharged to the environment, it is sampled and analyzed to determine and record the activity to

be released, and then will be discharged to the Auxiliary Building Ventilation System at a controlled rate, which is monitored by a radiation monitor. Samples are taken manually through pressure transmitter valve manifolds. The tank contents are released if the sampling has shown that activity is sufficiently low. During release, a trip valve in the discharge line is closed automatically by a high activity level indication in the Auxiliary Building vent.

During operation, gas samples are drawn and analyzed to determine their hydrogen and oxygen content. There should be no significant oxygen content in any of the tanks. This allows time to take required action before the combustible limits of hydrogen-oxygen mixtures are reached. Another tank is placed in service while the operator locates and eliminates the source of oxygen.

11.1.2.4 Solids Processing

The Waste Disposal System is designed to package solid wastes for removal to burial facilities. Miscellaneous materials such as paper and plastic are collected, analyzed, packaged and shipped from the site per Kewaunee's Solid Radioactive Waste Process Control Program (PCP).

Spent resin from the CVCS and other system demineralizers are flushed to a spent resin storage tank located in the Auxiliary Building basement. Periodically, spent resin is transferred to an approved package where it is de-watered. The dewatered container is then stored in a shielded area until they can be analyzed, packaged and shipped from the site per Kewaunee's PCP.

The Service Water Pretreatment Lagoon sludge, has the potential to become contaminated at very low levels. This sludge can be disposed of by land application to an area on-site at KPS provided the criteria identified in the NRC Safety Evaluation Report (Reference 1) and the Wisconsin Department of Natural Resources' Mandatory Operation Permit are complied with. Similarly, sewage treatment sludge has the potential to become contaminated at very low levels. This sludge can also be disposed of by land application (Reference 2).

11.1.2.5 Components

Codes applying to components of the Waste Disposal System are listed in Table 11.1-2. Components summary data are shown in Table 11.1-3.

11.1.2.6 Laundry and Hot Shower Tanks

Two stainless steel tanks collect liquid wastes originating from the laundry and hot shower. Additionally, the Technical Support Center laboratory drain sump is pumped into these tanks. When the tanks have been filled, the contents are pumped either to the waste holdup tank for processing, the Waste Condensate Tanks for retention pending release, or released to the environment following a liquid waste activity level determination.

11.1.2.7 Reactor Coolant Drain Tank

The reactor coolant drain tank is a right circular cylinder with spherically dished heads. The tank, which is all welded stainless steel, serves as a drain collection point for the RCS and other equipment located inside the Reactor Containment. The tank contents can be discharged to the waste holdup tank, refueling water storage tank or the CVCS holdup tanks.

11.1.2.8 Waste Holdup Tank

The waste holdup tank receives radioactive liquids from the CVCS, Sludge Intercept System, sump tank, reactor coolant drain tank, SGB tank, intermediate and operating floor drains, laundry and hot shower tanks, the chemical laboratory and sample room drains. The tank is of welded stainless steel construction. The tank's contents are normally pumped to the SGBT System holdup tanks for processing through the ion exchangers in that system. If radioactivity of the tank's contents are within acceptable levels the waste can be directly discharged to the environment.

11.1.2.9 Sump Tank and Pumps

The sump tank serves as a collection point for waste discharged to the basement floor drain header. Two horizontal centrifugal sump pumps drain this tank to the waste holdup tank. All wetted parts of the pumps are stainless steel. The tank is all welded stainless steel.

11.1.2.10 Gas Decay Tanks

Four welded carbon steel tanks are provided to contain compressed waste gases (hydrogen, nitrogen, and fission gases). Any given gas decay tank can be isolated to allow for radioactive decay if required. These gases are released at a controlled rate to the atmosphere through the Auxiliary Building vent. All discharges to the atmosphere are monitored.

11.1.2.11 Waste Gas Compressors

Two waste gas compressors are provided for continuous removal of gases from equipment that contains or can contain radioactive gases. These compressors are of the water-sealed rotary positive-displacement type. The operation of the compressors is automatically controlled by the gas manifold pressure. Construction is primarily of carbon steel. A mechanical seal is provided to minimize leakage of seal water.

11.1.2.12 Waste Condensate Tanks

Two tanks collect primarily laundry wastes. The contents are sampled and analyzed for radioactivity before discharge. The liquid is transferred by one-of-two waste condensate pumps to the waste holdup tank if the activity is high, or to the circulating water discharge if the activity is within discharge limits. These tanks are of welded stainless steel construction.

11.1.2.13 Baler

A hydraulically operated baler is used to compress solid wastes into containers. The baler is operated manually from a local station and is enclosed, supplied with a dust shroud to prevent escape of radioactive particulate matter, and is vented to the Auxiliary Building Ventilation System.

11.1.2.14 Nitrogen Manifold

Nitrogen is supplied to purge the vapor spaces of various NSSS components. Purging reduces the hydrogen concentration or replaces the fluid that has been removed. The dual manifolds have the capability of being supplied with gas from four portable banks of 12 gas cylinders each.

11.1.2.15 Hydrogen Manifold

Hydrogen is supplied to the main generator, volume control tank and to other various NSSS components from a central storage facility. Hydrogen is used as the heat transfer medium to cool the main generator and for maintaining the hydrogen overpressure in the volume control tank.

The storage facility consists of two independent dual manifolds and a common header. The crossover connection of the headers serves as a backup capability for both systems. The gas for the entire facility has the capability of being supplied by 6 portable banks of 12 gas cylinders each; any bank can be removed from service and another gas cylinder bank placed in service.

11.1.2.16 Gas Analyzer

An automatic gas analyzer is available to monitor the concentrations of oxygen and hydrogen in the cover gas of tanks and vessels, which might accumulate a hazardous mixture of the two gases.

11.1.2.17 Deaerated Drains Tank

The deaerated drains tank serves as a collection point for wastes from the miscellaneous valve leakoffs and hydrogenated system drains. A horizontal centrifugal sump pump transfers this collected liquid to the CVCS or waste holdup tanks. Post-accident the collected liquids can be pumped into the Containment sump “A.” All wetted parts of the pump are stainless steel. The tank is of welded stainless steel construction with a diaphragm seal to prevent entrained gases from escaping to the atmosphere, and to prevent oxygen contamination of the liquid.

11.1.2.18 SGB Heat Exchangers

Four SGB heliflow heat exchangers are used to cool normal flow blowdown from each steam generator to 100°F. The hydrop valve reduces the pressure to 40 psig prior to the blowdown passing through polishing filters and entering the Auxiliary Building Standpipe.

11.1.2.19 SGBT Heat Exchanger

The SGBT heat exchanger is used to cool liquid from the blowdown tank to below 120°F to allow processing through the SGBT ion exchanger.

11.1.2.20 SGBT Flash Tank Filters

The SGBT filters remove particulate matter from the fluid being pumped, prior to its passing to the SGBT holdup tanks or ion exchangers. The filter is constructed of stainless steel materials.

11.1.2.21 SGBT Monitor Tanks

The SGBT monitor tanks serve as a collection point for liquids processed through the SGBT ion exchanger. The contents are sampled at this point for an activity record before discharge through the Waste Disposal System radiation monitor to the circulating water discharge. The tanks are all-welded stainless steel construction.

11.1.2.22 SGBT Holdup Tank

The SGBT holdup tanks serve as a collection point for cooled and filtered blowdown liquid from the SGB tank before processing through the SGBT ion exchanger or for storage of liquid wastes transferred from the waste holdup tank prior to being processed through the SGBT ion exchangers. The tanks are of all welded stainless steel construction.

11.1.2.23 SGBT Ion Exchanger Pre-Filter

The SGBT ion exchanger pre-filter reduces the amount of ion exchanger resin fouling. The filter housing is constructed of stainless steel.

11.1.2.24 SGBT Ion Exchangers

Two flushable ion exchangers, capable of being operated in series or parallel, are provided. Each vessel is of all-welded stainless steel construction with a stainless steel resin retention element.

11.1.2.25 SGBT Ion Exchanger Post Filters

The SGBT ion exchanger post filters remove resin fines from the treated blowdown stream. The filter housings are constructed of stainless steel.

11.1.2.26 Pumps

The wetted surfaces of all pumps are stainless steel or other materials of equivalent corrosion resistance.

11.1.2.27 Piping

Piping carrying liquid wastes is stainless steel, while all gas piping is carbon steel. Steam generator blowdown piping is carbon steel to the point where this system joins the liquid wastes transferred from the waste holdup tank. Piping connections are welded, except where flanged connections are necessary to facilitate equipment maintenance.

11.1.2.28 Valves

All valves exposed to gases are carbon steel. Those exposed to liquids are stainless steel. All valves have stem leakage control. Globe valves are installed with flow over the seats when such an arrangement reduces the possibility of leakage.

Isolation valves are provided to isolate each piece of equipment for maintenance, to direct the flow of waste through the system, and to isolate storage tanks for radioactive decay.

Relief valves are provided for tanks containing radioactive wastes to prevent overpressurization by improper operation or component malfunction. Tanks containing wastes, which are normally free of gaseous activity, are vented locally.

11.1.3 Design Evaluation

The radiological impact of power uprate was evaluated for normal operation annual radwaste effluent releases (Reference 5).

Based on this evaluation it was determined that the power uprate to a core power level of 1772 MWt has no significant impact on the expected annual radwaste effluent releases/doses. All doses remain a small percentage of allowable 10 CFR 50 Appendix I dose limits. Following power uprate the liquid and gaseous radwaste effluent treatment system will remain capable of maintaining normal operation off-site doses within the requirements of 10 CFR 50, Appendix I (Reference 5).

11.1.3.1 Liquid Wastes

Liquid Wastes are generated primarily by plant maintenance and service operations. Table 11.1-4 and Table 11.1-5 contain a summary of the actual historical average annual values of the quantities and activity concentrations of influents to the system during the 1976 through 1981 time frame (which reflects plant operation at the average core power during that period). If the historical data is used to project the future release, core power uprate to 1772 MWt is expected to have minimal impact on the discharge quantities listed in Table 11.1-4. However, the released radioactivity in Table 11.1-5 could potentially increase by the percentage increase in power level between the uprated conditions and the average core power level during that time period (Reference 4).

11.1.3.2 Gaseous Wastes

Gaseous wastes consist primarily of hydrogen stripped from coolant discharged to the CVCS holdup tanks during boron dilution, nitrogen and hydrogen gases purged from the CVCS volume control when degassing the reactor coolant, and nitrogen from the Closed Gas Blanketing System. The original design basis for the gas decay tank capacity allows for storage of collected gaseous waste for at least 45 days prior to release. Release specifications are contained in the KPS Off-Site Dose Calculation Manual (ODCM). Table 11.1-6 contains a summary of the estimated annual average gaseous release from the plant. Based on the 1986 and 1987 KPS Semi-Annual Effluent Release Reports, actual typical annual gaseous discharge activity has been averaging less than 25 percent of the values shown in Table 11.1-6. The values in Table 11.1-6 are representative of a core power level of 1650 MWt. With a core power uprate to 1772 MWt, the Table 11.1-6 values could potentially increase by a maximum of the percentage increase in power level (Reference 4).

11.1.3.3 Solid Wastes

Solid wastes consist of filters, spent resins and miscellaneous materials such as paper and plastic. All solid wastes are packaged as noted under “Solids Processing” for removal to a burial facility. Annual solids, exclusive of solidified resins shipped for burial, averaged 1025 ft^3 during the period between 1975 and 1981. Annual average spent resin quantities shipped are 740 ft^3. More recent solid waste shipments are consistent with or below these volumes.

11.1.4 Minimum Operating Conditions

Verification is made to ensure that dilution flow sufficient to meet the requirements of 10 CFR 20 is available whenever radioactive liquid wastes are released to the Plant Discharge System.

All liquid waste releases are continuously monitored for gross activity during discharges to ensure that the activity limits specified in 10 CFR 20 for unrestricted areas are not exceeded. The Off-Site Dose Calculation Manual provides guidance when continuous monitoring is unavailable.

All batch radioactive liquid wastes are sampled prior to release to the Plant Discharge System.

At least one Auxiliary Building normal mode ventilation fan is in operation whenever radioactive gaseous wastes are released to the Auxiliary Building vent.

The maximum allowable dose rates at the site boundary due to discharges are specified in the Off-Site Dose Calculation Manual.

A record is maintained of the radioactive material contained in all releases.

11.1 References

1. NRC Safety Evaluation Report, A.G. Hansen (NRC) to C.A. Schrock (WPS), Letter No. K-92-119, June 17, 1992
2. NRC Safety Evaluation Report, R.J. Laufer (NRC) to M.L. Marchi (WPS), Letter No. K-95-172, November 13, 1995
3. Evaluation of Compliance with Technical Specification 6.19 for Removal of the Miscellaneous Waste Evaporator, J. Stewart Bland Associates, May 27, 1998
4. "Power Uprate, Balance of Plant Engineering Report, Kewaunee Nuclear Power Plant," Revision 1, February 2003
5. WCAP-16040-P, Power Uprate Project Kewaunee Nuclear Power Plant NSSS/BOP Licensing Report, February 2003

Table 11.1-1
Waste Disposal System Performance Data
(Historical – for information only)

Plant design life, years	40
Normal process capacity, liquids, gpm[a]	2
Evaporator load factor[1], %	25
Annual liquid discharge: [b]	
Volume, gal	1,681,200
Fission and activation products	
Total release (excluding H3 and dissolved gases), Ci	1.19E+0
Average concentration, mCi/ml	1.06E-8
Percent of Tech Spec, 10 Ci/qtr, %	1.19E+1
Tritium	
Total release, Ci	2.43E+2
Average concentration, mCi/ml	2.89E-6
Percent of Tech Spec, 3.0E-3 mCi/ml, %	9.63E-2
Dissolved gases	
Total release, Ci	
Average concentration, mCi/ml	1.40E+0
No applicable Tech Spec	1.38E-9
Gross alpha activity	
Total release, Ci	1.85E-3
Annual gaseous discharge:[b]	
Activity, Ci	438
Annual solids exclusive of solidified resins shipped for burial[b], ft^3	1025
Volume solidified spent resin, ft^3	740

a. The Waste Evaporator has been abandoned in place.
b. Based on actual release data 1976 through 1981.

Table 11.1-2
Waste Disposal Components Code Requirements

Component	Code
Reactor Coolant Drain Tank	ASME III[a], Class C
Sump Tank	No code
Waste Holdup Tank	No code
Deaerated Drains Tanks	No code
Waste Condensate Tank	No code
Laundry and Hot Shower Tank	No code
Waste Evaporator[c]	ASME Sect. III - C and ASME Sect. VIII
Waste Gas Compressors	No code
Waste Filter	ASME III[a], Class C
Piping and Valves	USAS-B31.1[b], Section 1 (1967) ASME Section III[d] Post 1980 Editions Approved by NRC
Gas Decay Tank	ASME III, Class C
SGBT Holdup Tanks	No code
SGBT Monitor Tanks	No code
SGBT Heat Exchangers	ASME VIII
SGBT Ion Exchangers	No code

a. ASME III, American Society of Mechanical Engineers, Boiler and Pressure Vessel Code, Section III, Nuclear Vessels

b. USAS-B31.1, Code for pressure piping American Standard Association and special nuclear cases where applicable

c. The Waste Evaporator has been abandoned in place

d. Alternative Design Code to USAS B31.1. During RFO 28, waste disposal tubing at Penetration #21, located between containment and the shield building, was analyzed to ASME Section III, reference Table B.7-6

Table 11.1-3
Component Summary Data

Tanks	Quantity	Type	Volume	Design Pressure	Design Temperature °F	Material [a]
Deaerated Drain	1	Vert	300 gal	Atm	180	SS
Reactor Coolant Drain	1	Horiz	350 gal	25 psig	267	SS
Laundry and Hot Shower	2	Vert	700 gal	Atm	250	SS
Sump Tank	1	Vert	600 gal	Atm	180	SS
Waste Holdup	1	Horiz	24,490 gal	Atm	180	SS
Waste Condensate	2	Vert	1000 gal	Atm	180	SS
Gas Decay	4	Vert	470 ft^3	150 psig	150	CS
SGBT Holdup Tanks	2	Horiz	10,000 gal	Atm	200	SS
SGBT Monitor Tanks	2	Horiz	10,000 gal	Atm	200	SS

a. Material contacting fluid.

Table 11.1-3 (continued)
Component Summary Data

Pumps	Quantity	Type	Flow Gpm	Head ft	Design Pressure psig	Design Temperature °F	Material[a]
Reactor Coolant Drain A	1	Horiz cent canned	50	175	150	267	SS
Reactor Coolant Drain B	1	Horiz cent canned	150	175	150	267	SS
Laundry	2	Horiz cent (b)	20	100	150	200	SS
SGBT Holdup Tank Pumps	2	Vert cent (c,d)	50	100	150	200	SS
SGBT Monitor Tank Pumps	2	Vert cent (b)	50	100	150	200	SS
SGBT Transfer Pumps	2	Vert cent (b)	50	100	150	220	SS
Sump Tank	2	Horiz cent[b]	20	100	150	200	SS
Waste Evaporator Feed	1	Horiz cent[b]	20	100	150	200	SS
Waste Condensate	2	Horiz cent[b]	20	100	150	200	SS

Table 11.1-3 (continued)
Component Summary Data

Pumps	Quantity	Type	Flow Gpm	Head ft	Design Pressure psig	Design Temperature °F	Material[a]
Deaerated Drain	1	Vert cent [b]	20	100	150	180	SS

a. Material contacting fluid.
b. Mechanical seal provided.
c. Mechanical seal provided.
d. Mechanical seal provided.

Table 11.1-3 (continued)
Component Summary Data

Miscellaneous	Quantity	Capacity	Type	Design Pressure psig	Design Temperature °F	Material [a]
Waste Evaporator[c]	1	2 gpm	Vacuum			SS
Waste Gas Compressors	2	40 SCFM	Horiz cent [b]			CS
SGBT Heat Exchanger	1	20 gpm Tube 90 gpm Shell	U-Tube Horiz Shell			SS CS
SGB Heat Exchangers	4	100 gpm Tube 200 gpm Shell	U-Tube Horiz Shell	1100 500	600 400	SS CS

a. Material contacting fluid.
b. Mechanical seal provided.
c. The Waste Evaporator has been abandoned in place.

Table 11.1-4
Liquid Discharge To Waste Disposal Discharges, gal
(Historical – for information only)

Source	Total Annual [a]
Laundry, shower, hand washes	330,000
Miscellaneous sources (laboratories, equipment drains leaks, decontamination)	1,351,200
TOTALS	1,681,200
SG Blowdown	1,750,000

a. Based on actual releases 1976 through 1981.

Table 11.1-5
Liquid Release By Isotope
Volume Discharged, Gal - 1,681,100
(Historical – for Information Only)

Isotope	Annual Average Curies[a]
Sr-89	1.00E-3
Sr-90	2.54E-4
Nb-95	5.40E-3
I-131	1.88E-2
I-133	7.37E-4
Cs-134	7.38E-2
Cs-136	5.22E-4
Cs-137	5.73E-2
Cs-138	1.23E-4
Ba-140	4.53E-4
Mn-54	4.52E-2
Co-57	3.11E-4
Co-58	5.53E-1
Co-60	1.61E-1
Sb-124	3.40E-2
Sb-125	3.40E-2
Cr-51	4.62E-2
AG-110m	4.33E-2
Na-24	9.72E-3
Fe-59	6.08E-3
Sn-113	6.06E-4
Xe-133	9.77E-2
Xe-135	3.28E-4
Zr-95	2.15E-3

Table 11.1-5
Liquid Release By Isotope
Volume Discharged, Gal - 1,681,100
(Historical – for Information Only)

Isotope	Annual Average Curies[a]
Other (13 Various Isotopes)	1.43E-3

a. Based on actual release 1976 through 1981.

Table 11.1-6
Annual Gaseous Release By Isotope
(Historical – for information only)

Fission and Activation Gases	
Total release (Ci)	4.30E+2
Average release rate (mCi/sec)	5.83E+1
Percent of Tech Spec (based on Xe-135)	1.31E+0
Iodine-131	
Total release (Ci)	5.22E-3
Average release rate (mCi/sec)	6.41E-4
Percent of Tech Spec	1.05E+0
Particulate (half-lives J 8d)	
Total release (Ci)	4.42E-4
Average release rate (mCi/sec)	5.58E-5
Percent of Tech Spec	9.12E-2
Gross alpha release (Ci)	2.04E-4
Tritium	
Total release (Ci)	8.07E+0
Average release rate (mCi/sec)	1.01E+0
There is no applicable Tech Spec limiting Tritium release rates	
Annual gaseous discharge activity (Ci/year)	438

Figure 11.1-1 Waste Disposal System Flow Diagram (Sheet 1 of 2)

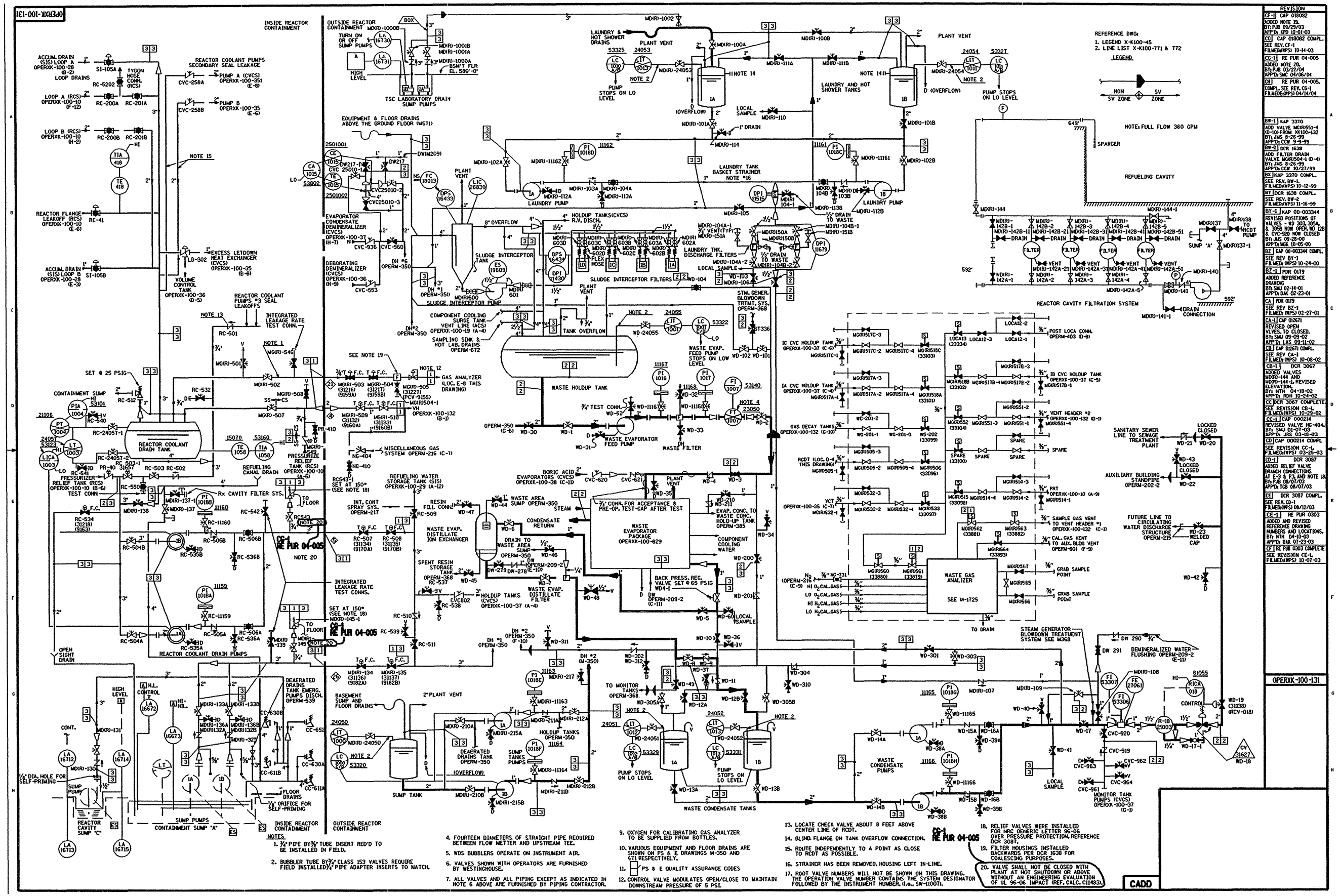

Figure 11.1-2 Waste Disposal System Flow Diagram (Sheet 2 of 2)

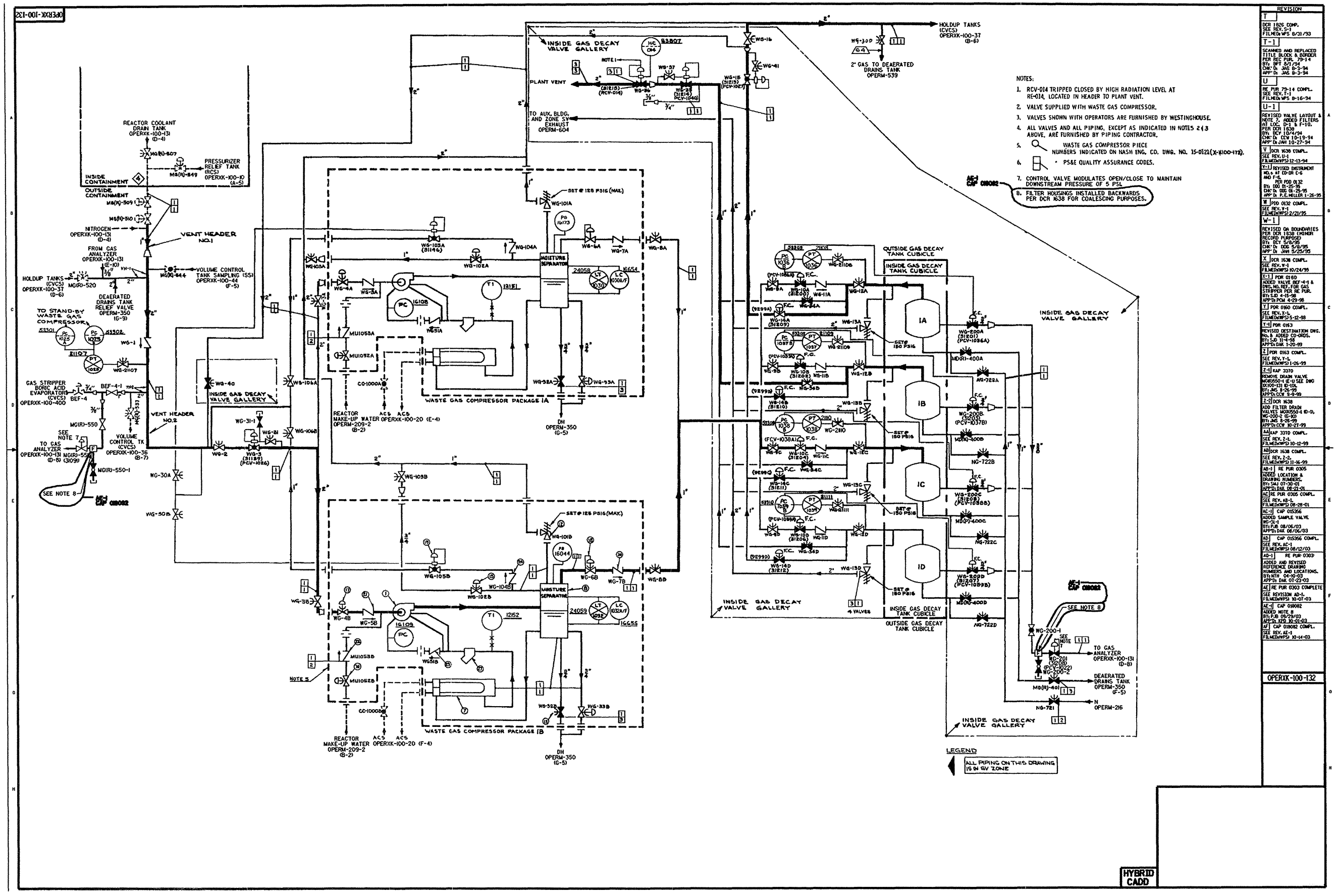

Figure 11.1-3 Steam Generator Blowdown Treatment System - Flow Diagram

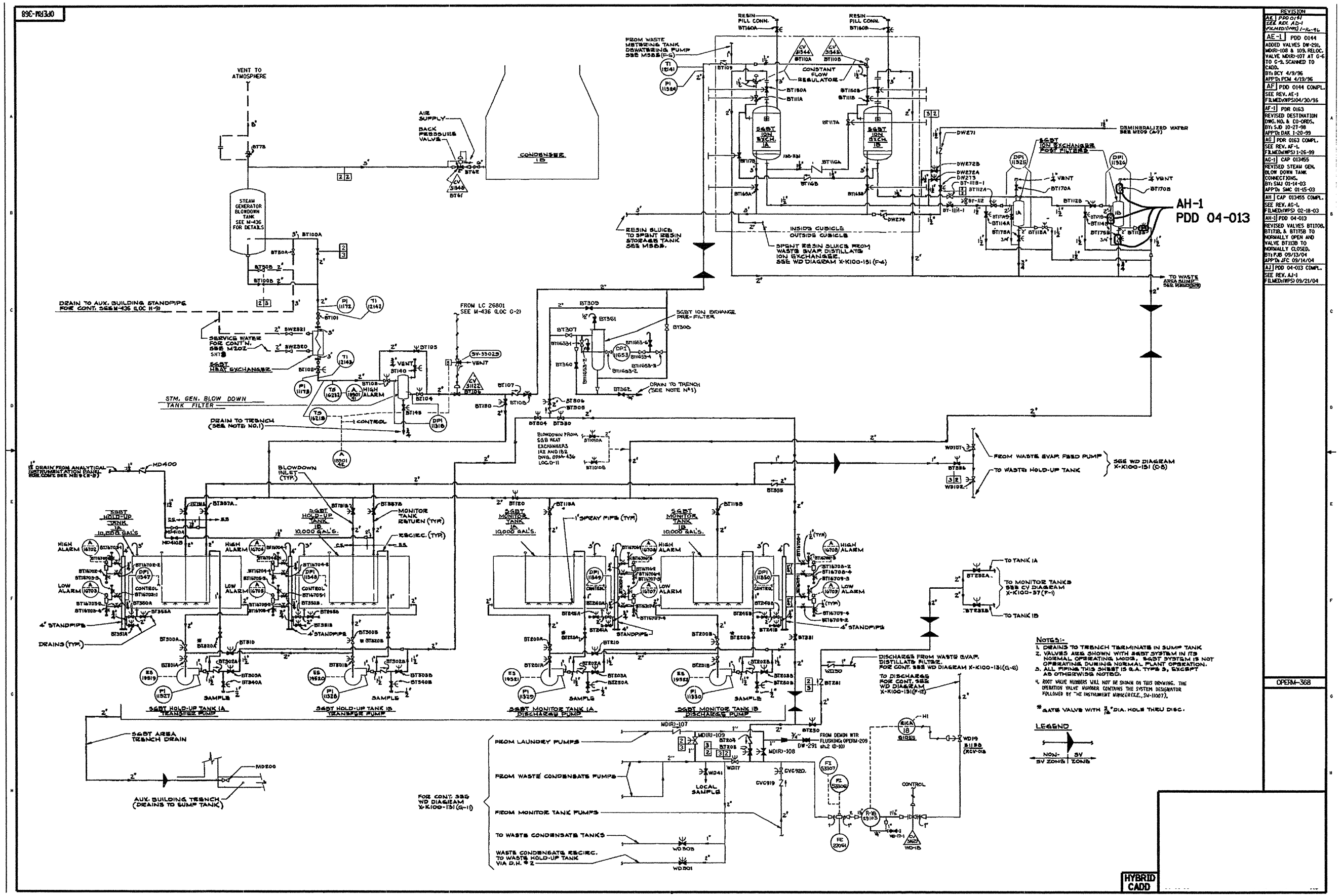

Figure 11.1-4 Flow Diagram Steam Generator Blowdown System

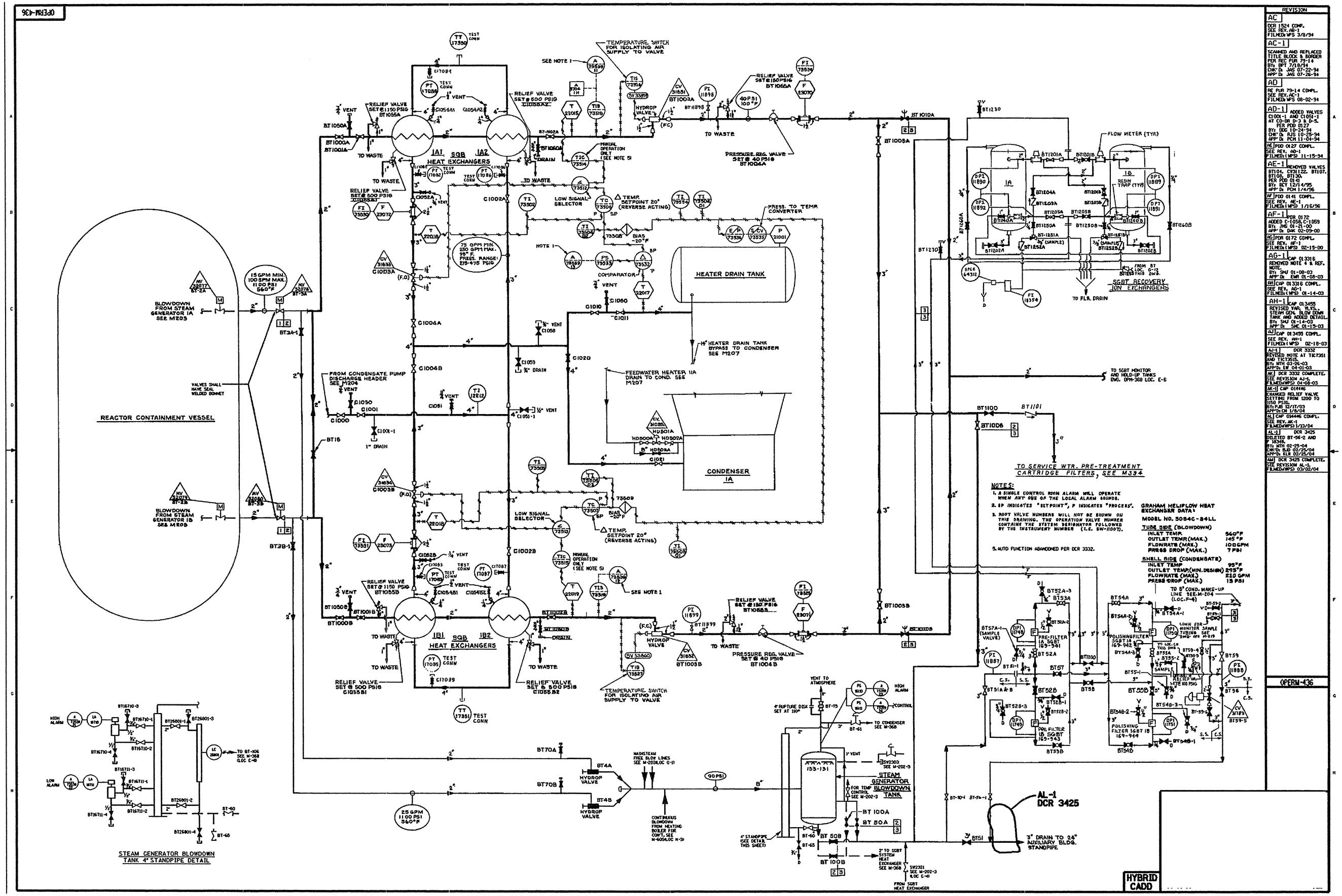

Figure 11.1-5 Reactor Plant Misc. Vents, Drains and Sump Pump Piping - Flow Diagram (Sheet 1 of 2)

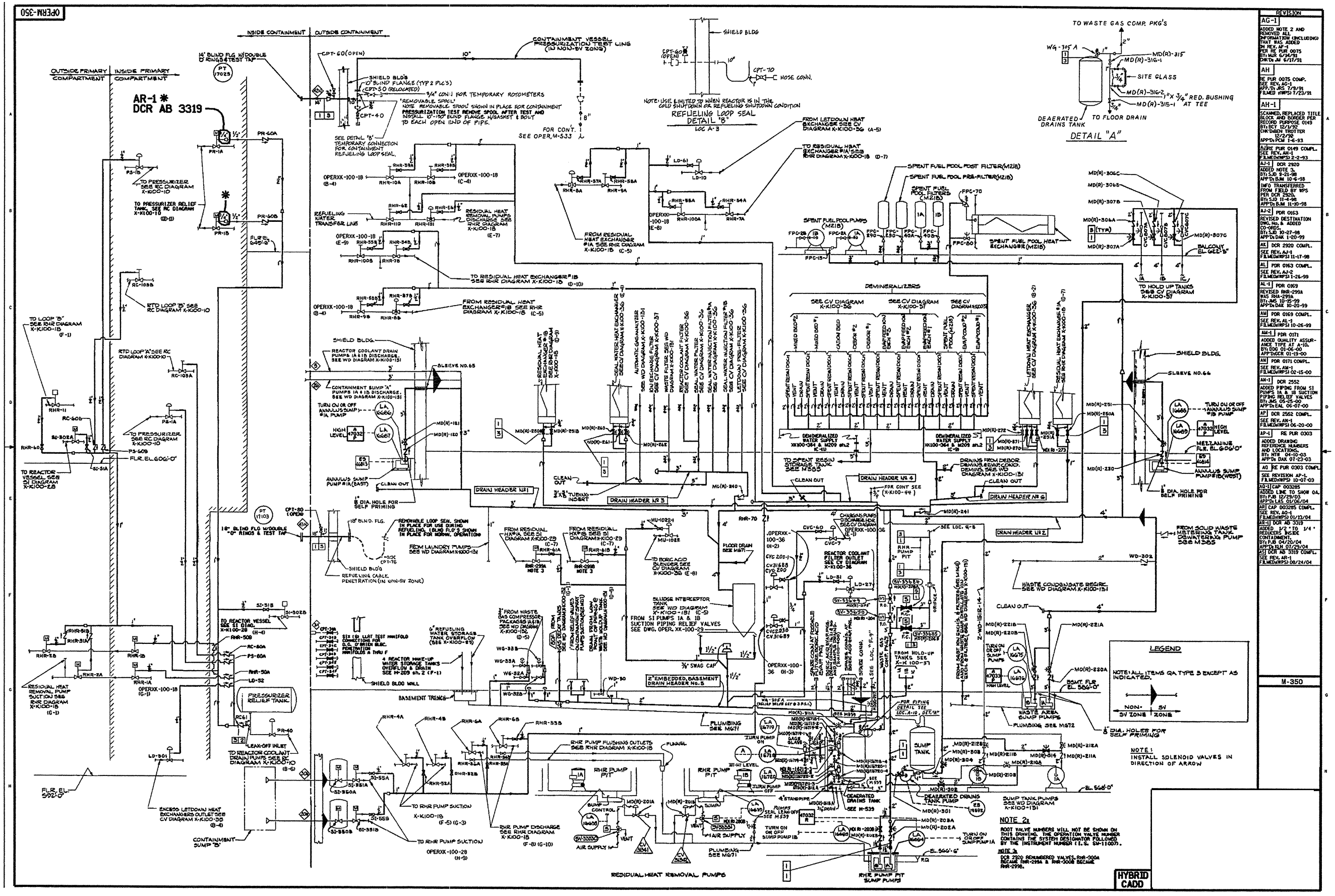

Figure 11.1-6 Reactor Plant Misc. Vents, Drains and Sump Pump Piping - Flow Diagram (Sheet 2 of 2)

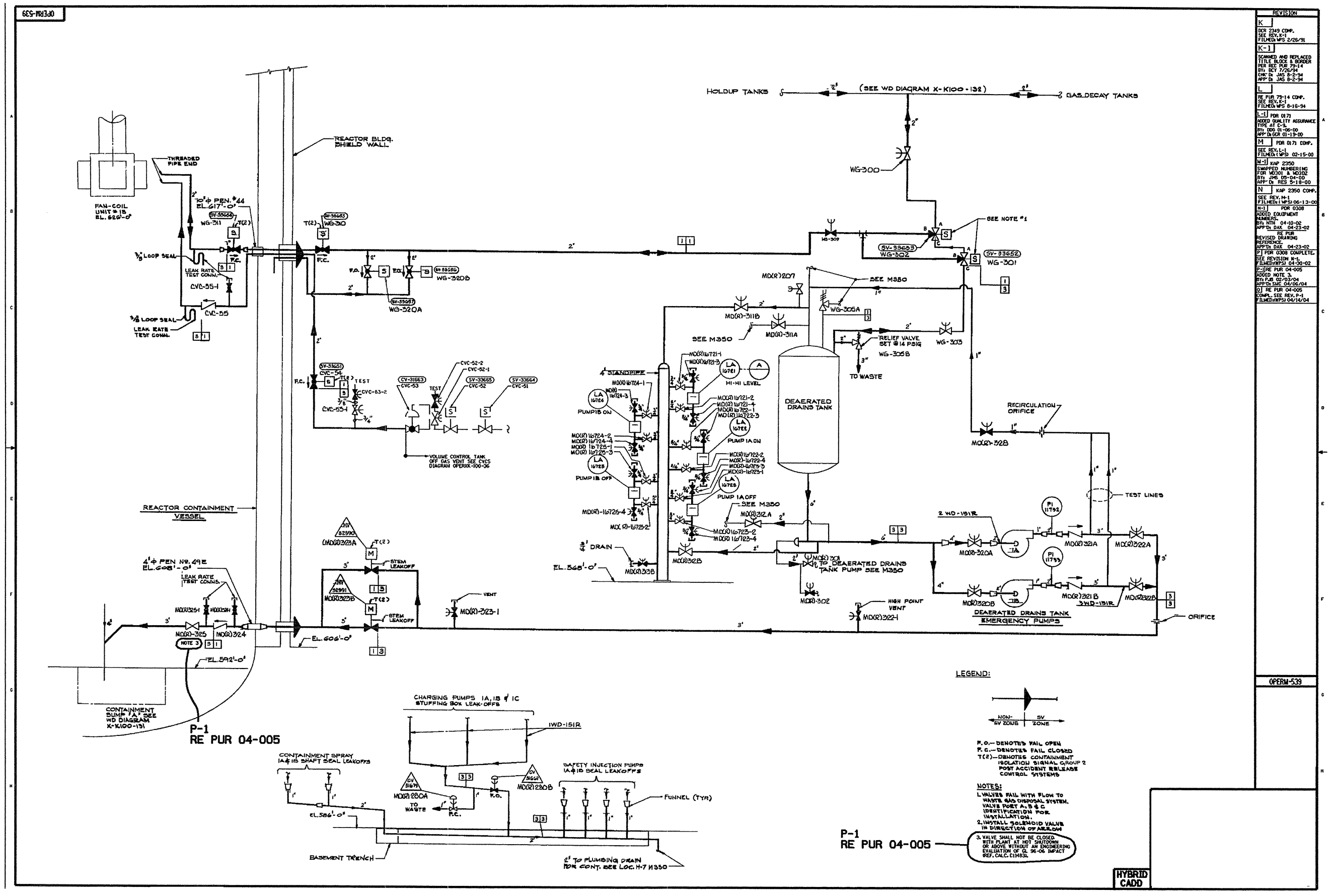

Figure 11.1-7 Liquid Waste Disposal Flow Diagram

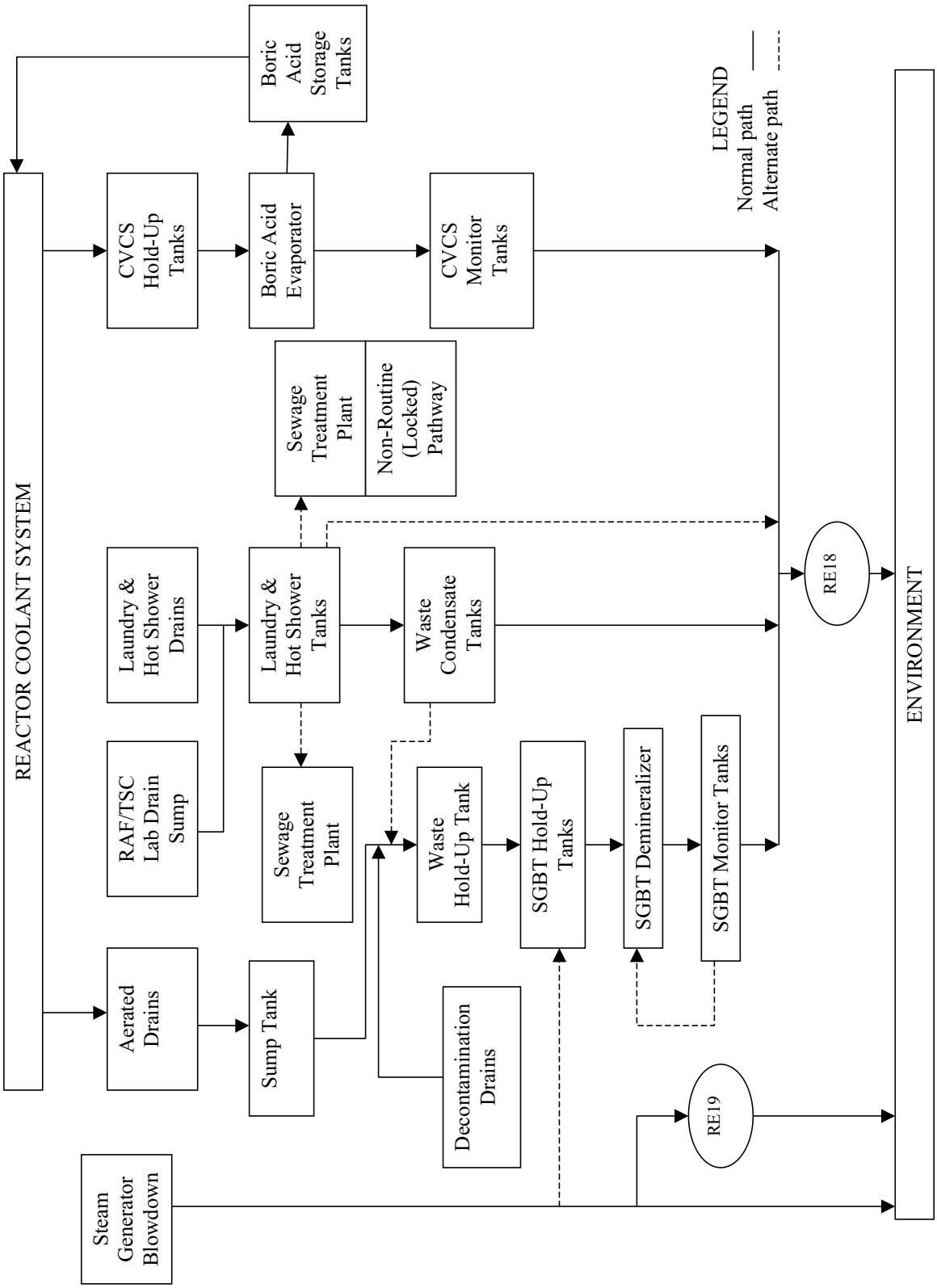

Figure 11.1-8 Waste Gas Processing

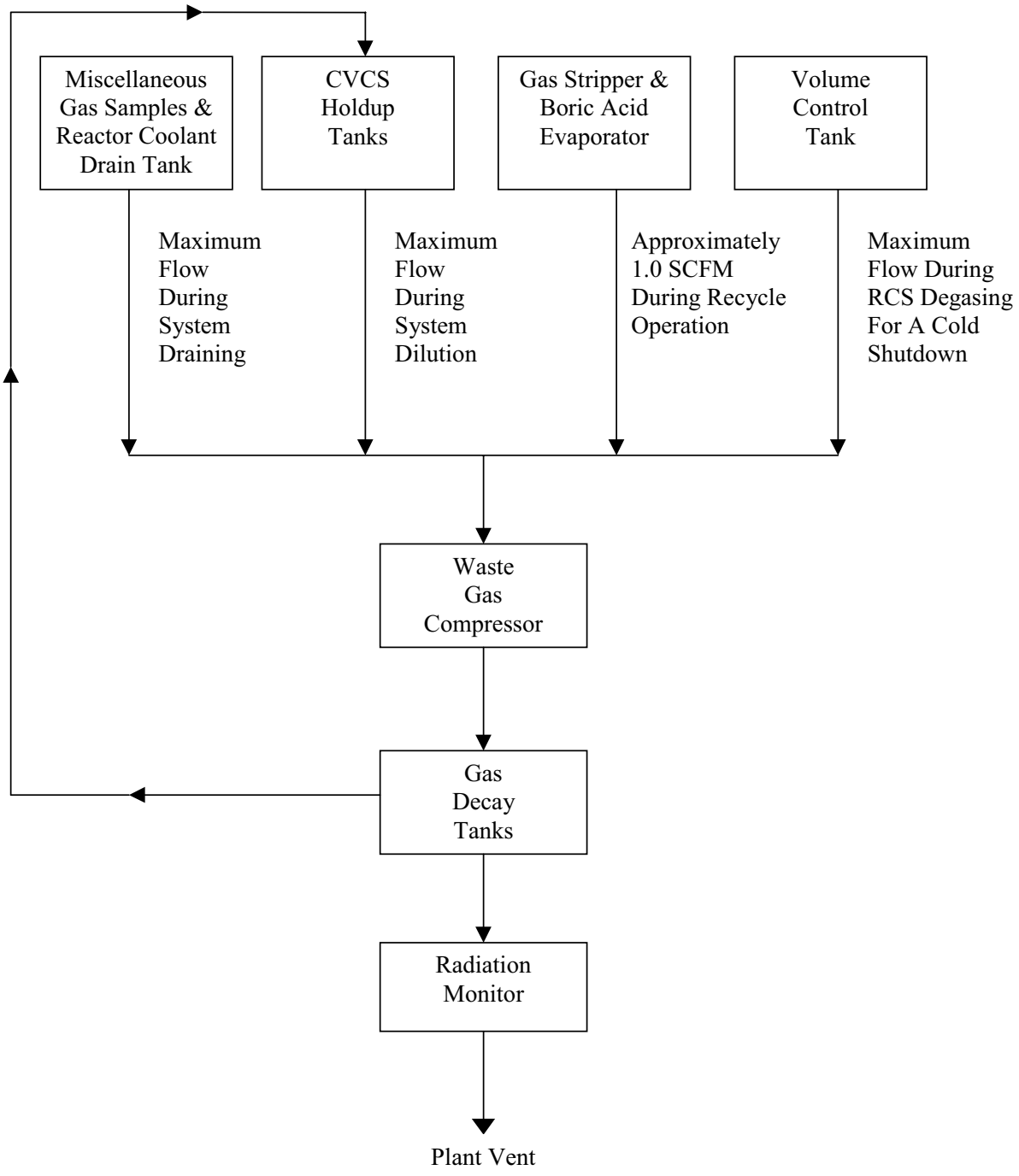

11.2 RADIATION PROTECTION

11.2.1 Design Basis

11.2.1.1 Monitoring Radioactivity Releases

Criterion: Means shall be provided for monitoring the containment atmosphere and the facility effluent discharge paths for radioactivity released from normal operations, from anticipated transients, and from accident conditions. An environmental monitoring program shall be maintained to confirm that radioactivity releases to the environs of the plant have not been excessive (GDC 17).

The containment atmosphere, the Containment System vent, the Auxiliary Building vent, the Control Room Ventilation System, the spent fuel pool heat exchanger service water discharge, the RHR pump pit ventilation exhaust, the condenser air ejector exhaust, the containment fan-coil service water discharge, blowdown from the steam generators, the component cooling water, and the Waste Disposal System liquid effluent are monitored for radioactivity concentration during normal operations, anticipated transients, and accident conditions. High radiation in any of these is indicated and alarmed in the Control Room.

All gaseous effluent from possible sources of accidental radioactive release external to the Reactor Containment (e.g., the spent fuel pool and waste handling equipment) is exhausted from an Auxiliary Building vent, which is monitored. All accidental spills of liquids are contained within the Auxiliary Building and collected in a sump.

For any leakage from the Reactor Containment under accident conditions, the Shield Building Ventilation System provides dilution, holdup and filtration capability to minimize the dose contribution. The Auxiliary Building Special Ventilation System provides filtration capabilities for the containment leakage, which bypasses the Shield Building Ventilation System.

The Plant Radiation Monitoring System supplemented by portable survey equipment provides adequate monitoring of radioactivity release. An outline of the procedures and equipment to be used in the event of an accident is presented in Section 11.2.3. The environmental monitoring program is described in Section 2.8.

11.2.1.2 Monitoring Fuel and Waste Storage Areas

Criterion: Monitoring and alarm instrumentation shall be provided for fuel and waste storage and associated handling areas for conditions that might result in loss of capability to remove decay heat and to detect excessive radiation levels (GDC 18).

Monitoring and alarm instrumentation is provided for fuel and waste storage and handling areas to detect inadequate cooling and excessive radiation levels. Radiation monitors are provided to maintain surveillance over the release of radioactive gases and liquids, and the permanent record of activity releases is provided by radiochemical and analysis of known quantities of waste.

The Spent Fuel Pool Cooling System loop flow is monitored to ensure proper operation, as described in Chapter 9.

A controlled ventilation system removes gaseous radioactivity from the atmosphere of the fuel storage and waste treatment areas of the Auxiliary Building and discharges it to the atmosphere via the Auxiliary Building vent. Radiation monitors are in continuous service in these areas to actuate high radiation alarms, as described in Section 11.2.3.

11.2.1.3 Fuel and Waste Storage Radiation Shielding

Criterion: Adequate shielding for radiation protection shall be provided in the design of spent fuel and waste storage facilities (GDC 68).

Auxiliary shielding for the Waste Disposal System and its storage components are designed to limit radiation to levels not exceeding 1 mR/hr in normally occupied areas, to levels not exceeding 2.5 mR/hr in periodically occupied areas and to levels not exceeding 15 mR/hr in controlled occupancy areas.

Gamma radiation is continuously monitored in the Auxiliary Building. High level signals are alarmed locally and annunciated in the Control Room.

11.2.1.4 Protection Against Radioactivity Release from Spent Fuel and Waste Storage Areas

Criterion: Provisions shall be made in the design of fuel and waste storage facilities such that no undue risk to the health and safety of the public could result from an accidental release of radioactivity (GDC 69).

All waste handling and storage facilities are contained and equipment is designed so that accidental releases directly to the atmosphere are monitored and will not exceed the applicable guidelines, as discussed in Section 11.1.2, Section 14.2.2 and Section 14.2.3.

11.2.2 Primary and Secondary Shielding

11.2.2.1 Design Basis

Radiation shielding is designed for operation at maximum radiation levels at the site boundary to below those levels allowed for continuous non-occupational exposure. The plant is capable of continued safe operation with 1 percent fuel element defects.

In addition, the shielding and containment provided ensure that in the unlikely event of a Design Basis Accident, the subsequent off-site radiation exposures will be below the guidelines of 10 CFR 50.67.

Sufficient shielding exists to limit essential equipment exposure and to provide adequate access to vital areas necessary to aid in the mitigation of, or recovery from, a Design Basis Accident. Plant shielding was inspected by a NRC representative and found to satisfy the requirements of Item II.B.2 of NUREG-0737 (see NRC SER in Reference 1). Operating personnel at the plant are protected by adequate shielding, monitoring, and operating procedures. Each area in the plant is classed according to the dose rate allowable in the area, based on the expected frequency and duration of occupancy. All plant areas capable of personnel occupancy are classified as one of the five zones of radiation level listed in Table 11.2-1. The Radiation Control areas are shown in Figure 11.2-1 through Figure 11.2-4. Typical Zone 0 areas are the Turbine Building and turbine plant service areas. Typical Zone I areas are the offices and Control Room. Zone II areas include the local control spaces in the Auxiliary Building and the operating floor of the Containment during reactor shutdown. Areas designated as Zone III include the sample room, valve galleries, fuel-handling areas, and intermittently occupied work areas. Typical Zone IV areas are the shielded equipment compartments enclosing the gas decay tanks and volume control tanks in the Auxiliary Building, waste-container storage area, and the Reactor Coolant loop compartments after shutdown.

All radiation and high radiation areas are appropriately marked and isolated in accordance with 10 CFR 20 and other applicable regulations.

The radiological impact of power uprate was evaluated for normal operation dose rates and shielding, post accident access to vital areas, and Radiological Environmental Qualification of equipment (Reference 6).

The pre-power uprate calculations of neutron and gamma ray leakage from the KNPP reactor for the Radiation Source Manual were based on a design basis core configuration that included fresh fuel on the core periphery and an assumed core power level of 1721 MWt. This fuel management approach resulted in relatively high-power generation at the periphery of the core, thus maximizing the neutron and gamma radiation levels external to the reactor vessel. In actual operations, the Kewaunee reactor has transitioned to low leakage fuel management, which places burned fuel on the periphery of the core. This fuel management strategy acts to reduce radiation leakage by at least a factor of 2-to-4. The equilibrium fuel cycle defined for the Kewaunee Power Uprate Program also represents a low-leakage core design. Based on the application of low-leakage fuel management, the increase in reactor power to 1772 MWt is completely offset by the reduction in core leakage. Thus, the power uprate will have no practical impact on the design basis of the primary shielding and the dose rates adjacent to the reactor vessel/primary wall.

The current plant Technical Specifications restrict the primary coolant activity to a maximum of 1.0 µci/gm DE I-131 (Technical Specification, Section 3.1.c), which provides an inherent margin to the design basis primary coolant activity of 4.5 µci/gm. Due to the limits imposed on primary coolant activity by the Technical Specifications the calculated increase in the design basis source term due to the power uprate is bounded by the design basis primary coolant activity. Therefore, taking into consideration the limits on RCS concentrations imposed by the plant Technical Specifications, it is concluded that the shielding design based on the original design basis primary coolant activity remains valid at the power uprate condition.

Following the power uprate, the post-LOCA vital area operator dose estimates will remain within the regulatory limits of NUREG-0578, Item 2.1.6.b and NUREG-0737 II.B.2 and II.B.3.

The power uprate has no significant effect on plant normal operation radiation zones and shielding requirements. A review of all of the EQ Evaluation and Review files was completed and it was determined that all the components in the EQ Program are qualified to the power uprate radiation environmental levels.

The shielding is divided into four categories according to function.

These functions include the primary shielding, the secondary shielding, the fuel handling shielding, and auxiliary shielding.

11.2.2.2 Primary Shielding

The primary shielding is designed to:

- Reduce the neutron fluxes incident on the reactor vessel to limit the radiation-induced increase in transition temperature.
- Attenuate the neutron flux sufficiently to prevent excessive activation of plant components.
- Limit the gamma flux in the reactor vessel and the primary concrete shielding to avoid excessive temperature gradients or dehydration of the primary concrete shield.
- Reduce the residual radiation from the core, reactor internals and reactor vessel to levels which will permit access to the region between the primary and secondary shields after plant shutdown.
- Reduce the radiation leakage contribution to obtain optimum division of the shielding between the primary and secondary shields.

11.2.2.3 Secondary Shielding

The main function of the secondary shielding is to attenuate the radiation originating in the reactor and the reactor coolant. The major source in the reactor coolant is the Nitrogen-16 activity, which is produced by neutron activation of oxygen, during passage of the coolant through the

core. The secondary shielding limits the full power radiation levels outside the containment building to less than 1 mR/hr. The secondary shield also ensures that the design radiation levels are not exceeded following a Design Basis Accident.

11.2.2.4 Fuel Handling Shielding

The fuel handling shielding permits the safe removal and transfer of spent fuel assemblies and rod cluster control assemblies (RCCAs) from the reactor vessel to the spent fuel pool. It is designed to attenuate radiation from spent fuel, RCCAs, and reactor vessel internals to less than 2.5 mR/hr at the refueling cavity water surface and less than 1.0 mR/hr in the Auxiliary Building.

11.2.2.5 Auxiliary Shielding

The function of the shielding is to protect personnel working near various system components in the CVCS, the RHR System, the Waste Disposal System and the Sampling System. The shielding provided for the Auxiliary Building is designed to limit radiation levels to less than 1 mR/hr in normally occupied areas, and at or below 2.5 mR/hr in periodically occupied areas. Additional shielding has been provided and equipment has been relocated to minimize exposures to personnel and equipment where necessary.

11.2.2.6 Shielding Design

11.2.2.6.1 Primary Shielding

The primary shielding consists of the reactor internals, the reactor vessel wall, and a concrete structure surrounding the reactor vessel.

The primary shielding immediately surrounding the reactor pressure vessel consists of a reinforced concrete structure extending from the base of the containment to a height of 69.0 feet. The lower portion of the shield is a minimum thickness of 7.0 feet of concrete and is an integral part of the main structural concrete support for the reactor vessel. It extends upward to the operating floor, forming a portion of the refueling cavity. This cavity is approximately rectangular in shape, and has concrete sidewalls, which are 5 feet 5 inches thick adjacent to areas in which fuel is transported.

The primary concrete shielding is air cooled to prevent overheating and dehydration from the heat generated by radiation absorption in the concrete. Eight “windows” have been provided in the primary shield for insertion of the out-of-core nuclear instrumentation. Cooling for the primary shield concrete, nuclear instrumentation, and vessel supports is provided by circulating 12,000 cfm of containment air between the reactor vessel wall and the surrounding concrete structure. The original primary shield neutron fluxes and design parameters are listed in Table 11.2-2.

11.2.2.7 Secondary Shielding

The secondary shield surrounds the Containment, the reactor coolant loops and the primary shield. It consists of interior walls within the Containment, the operating floor, and the Shield Building. The Shield Building also serves as the accident shield.

The total thickness of concrete provided for this function in the area above grade is 5 feet 8 inches. Of this, approximately 3 feet 2 inches is concrete wall inside the Containment immediately surrounding the reactor coolant loops and 2 feet 6 inches is in the Shield Building wall. This shielding reduces the radiation intensity at the outside surface of the Shield Building to a negligible level during normal plant operation.

The Shield Building consists of the 2 foot 6 inch reinforced concrete cylinder capped by a shallow, reinforced concrete dome 2 feet thick. Supplemental shielding has been provided for the Containment penetrations where required. Chapter 5 contains a detailed discussion of the Shield Building. The original secondary shielding design parameters are listed in Table 11.2-3. The equipment access hatch is shielded by a 2 foot 6 inch thick concrete shadow shield. The Control Room is protected with concrete sidewalls 2 feet thick, and a concrete roof 2 feet thick.

The original accident shielding design parameters are listed in Table 11.2-4.

11.2.2.8 Fuel Handling Shielding

The refueling cavity is formed by the upper portions of the primary shield concrete and other sidewalls of varying thicknesses. A portion of the cavity is used for storing the upper and lower internals packages. These are shielded with concrete walls 5 feet thick. The remaining walls vary from 4 feet to 6 feet thick, and provide the shielding required for handling spent fuel.

The refueling cavity, flooded with borated water to a height of 40 feet 2 inches during refueling operations, provides a temporary water shield above the components being withdrawn from the reactor pressure vessel. The water height during refueling is approximately 24 feet above the reactor pressure vessel flange. This height ensures that a minimum of 10 feet of water will be above the top of a withdrawn fuel assembly. Under these conditions, the radiation level is less than 50 mR/hr at the water surface.

The spent fuel assemblies and Rod Control Cluster Assemblies (RCCAs) are remotely removed from the reactor containment through the horizontal spent fuel transfer tube and placed in the spent fuel pool. Concrete, 5 feet thick, shields the spent fuel transfer tube. This shielding is designed to protect personnel from radiation during the time a spent fuel assembly is passing through the main concrete support of the Containment and the transfer tube.

Radial shielding, during fuel transfer is provided by the water and concrete walls of the fuel transfer canal. An equivalent of 6 feet of concrete is provided to insure a radiation level of 1.0 mR/hr in the Auxiliary Building areas adjacent to the spent fuel pool.

Spent fuel is stored in the spent fuel pool, which is located adjacent to the Containment. Radial shielding for the spent fuel is provided by 5-foot thick concrete walls. The pool is flooded with borated water to a level such that the normal water height above the stored fuel assemblies is approximately 25 feet.

The fuel handling shielding design parameters are listed in Table 11.2-5.

11.2.2.9 Auxiliary Shielding

The auxiliary shield consists of concrete walls around certain components and piping which process reactor coolant. In some cases, the concrete block walls are removable to allow personnel access to equipment during maintenance periods. Each equipment compartment is individually shielded so those compartments may be entered without having to shut down the adjacent system for any reason.

The primary shield material provided throughout the Auxiliary Building is concrete. The principal auxiliary shielding provided and the original design parameters are tabulated in Table 11.2-6.

11.2.3 Radiation Monitoring System

The Radiation Monitoring System provides continuous radiological surveillance of plant system and working areas. The system performs the following basic functions:

- Warns operating personnel of radiological health hazards, such as abnormal radiation fields.
- Provides warning of plant malfunctions, which could lead to plant damage and/or radiological hazards.
- Prevents or minimizes inadvertent releases of radioactivity to the environment via automatic action capability.
- Provides monitoring of controlled radiological plant releases.

Radiation detection instruments are located in areas of the plant, which house equipment containing or processing radioactive fluid. These instruments continually detect, compute, and record operating radiation levels. If the radiation level should rise above the set point for any channel, an alarm is initiated in the Control Room or Radiation Protection Office. Some channels also alarm locally. In stipulated cases, the alarm signal also provides the necessary signal for automatic process controls (e.g., valve closure, damper isolation, etc.). The Radiation Monitoring System operates in conjunction with regular and special radiation surveys and with chemical and radiochemical analyses performed by the plant staff. Adequate information and warning is thereby provided for the continued safe operation of the plant and assurance that personnel exposure does not exceed the limits of 10 CFR 20.

Two high range detectors are located in the containment. These two-containment area monitoring channels are the only components in the Radiation Monitoring System designed to operate following a major LOCA.

The components of the Radiation Monitoring System are designed according to the following environmental conditions:

- Temperature - an ambient temperature range as specified in Table 11.2-8.
- Humidity - 0 to 95 percent relative humidity.
- Pressure - Components in the Auxiliary Building and Control Room are designed for normal atmospheric pressure. Area Monitoring System components inside the Containment are designed to withstand containment test pressure.
- Radiation - Process and area radiation monitors are of a non-saturating design so that they “peg” full scale if exposed to radiation levels at over full-scale intensities. Critical process monitors are located in areas where the normal and post-accident background radiation levels will not affect their usefulness.

The Radiation Monitoring System consists of two types of components, the Process monitors and the Area monitors.

- The Process Radiation Monitoring System refers to those radiation monitors capable of analyzing fluid (air or water) flow for indication of increasing radiation levels.
- The Area Radiation Monitoring System monitors the direct radiation in various areas of the plant or indication of increasing radiation levels.

The Environmental Radiation Monitoring Program, as described in the Radiological Environmental Monitoring Manual, monitors radiation in various areas surrounding the plant. (This is described in Section 2.8.)

11.2.3.1 Main Process Radiation Monitoring System

The Main Process Radiation Monitoring System is designed to provide information to plant personnel on:

- Radioactivity levels present in fluid (air and water) systems.
- Leakage across boundaries of closed systems.
- Radioactivity concentrations in liquid and gaseous flow paths that lead to release from the plant.

In conjunction with the design functions spelled out above, the system is capable of initiating automatic actions designed to prevent or minimize any inadvertent/uncontrolled release of radioactivity to the environment.

The Main Process Monitoring System consists of 13 channels of monitoring equipment, 9 of which are equipped with some level of automatic action upon receipt of a high radiation alarm. Seven of the 13 channels perform engineered safety related functions. The Main Process Monitoring System consists of the following:

Process Monitors

- R-11 Containment System vent (Air Particulate)
- R-12 Containment System vent (Radioactivity Gas)
- R-13 Auxiliary Building vent A
- R-14 Auxiliary Building vent B
- R-15 Condenser air ejector
- R-16 Containment fan coil water
- R-17 Component Cooling System (Liquid Effluent)
- R-18 Waste Disposal System (Liquid Effluent)
- R-19 Steam gen. blowdown (Liquid Sample)
- R-20 Service Water System
- R-21 Containment System vent (Activity)
- R-22 Residual heat removal pump pit
- R-23 Control Room vent

The channels are capable of operational verification via the use of check sources that are either incorporated into the detector housing or externally mounted. In addition, there are alarms provided for channel failure and high radiation conditions. The alarms are indicated both at the individual radiation monitor meter panel and on the main annunciator panel, as well as via the annunciator audible alarm. The radiation level is indicated by a meter and can be recorded on multipoint recorders. Table 11.2-7 and 11.2-8 contain the channel data pertinent to each detector.

Certain process radiation monitors also utilize flow alarms, which alert the operator or technician to an abnormal flow situation in the process stream. Non-interruptible power for the system is provided via inverters off the 125V dc supply.

Each channel contains a completely integrated modular assembly, which includes the following:

1. Level Amplifier

   Amplifies and discriminates the detector output pulse to provide a discriminated and shaped pulse output to the log level amplifier.

2. Log Level Amplifier

   Accepts the shaped pulse of the level amplifier output, performs a log integration (converts total pulse rate to a logarithmic analog signal). The analog signal is then converted to a digital signal that provides output for suitable indication and recording.

3. Power Supplies

   Three separate dual power supplies are used to power the control room equipment 1) Area monitor, 2) Train A Process Monitors and 3) Train B Process Monitors. The field equipment is powered by its associated control room supply.

4. Test-Calibration Circuitry

   These circuits provide a predetermined value that pulses an LED into the NAI crystal that generates a signal to perform a channel test, and a solenoid-operated radiation check source to verify the channel's operation.

5. Radiation Level Meter

   This meter, mounted on the assembly drawer, has a scale calibrated logarithmically in counts per minute in the ranges from 1E+1 to 1E+7.

6. Indicating Lights/Annunciators

   These lights indicate high, alert and normal radiation alarm levels and a channel failure. An annunciator on the main control board is actuated on high and alert radiation signals and check source active, channel failure, high/low flow (process skids) and power supply failure.

7. Bistable Circuits

   Several bistable circuits are provided, to alarm on high and alert radiation (actuation point may be set at any level over the range of the instruments), check source active, high/low flow and channel failure.

8. A remotely operated long-half-life radiation check source is furnished in each channel. The energy emissions are similar to the radiation energies being monitored. The source strength is sufficient to produce an upscale meter indication above background.

The Process Radiation Monitoring System consists of the following radiation monitoring channels:

11.2.3.2 Containment or Containment System Vent - Air Particulate Monitor (R-11)

This monitor is provided to measure air particulate gamma radioactivity in the Containment with the ability to alternately monitor the Containment purge exhaust. This application ensures that the release rate during purging is maintained below specified limits.

High radiation level for the channels initiates closure of the Containment purge supply and exhaust duct valves.

This monitor has a measuring range of 1.06E-12 to 1.06E-6 μCi/cc.

This channel takes a continuous air sample from either the Containment atmosphere, or the purge exhaust. The sample is drawn from the Containment discharge ductwork through a closed, sealed system monitored by a scintillation counter - filter paper detector assembly. The filter paper collects particulate matter greater than 1 micron in size, on its constantly moving surface, and is viewed by a Beta Plastic-scintillation detector. In the case of the purge exhaust an isokinetic nozzle is used to obtain a representative sample. The sample is returned either to the Containment purge exhaust or the Auxiliary Building exhaust, after it passes through the series connected (R-12) gas monitor.

The detector assembly is in a completely enclosed housing. The pulse signal is transmitted to the Radiation Monitoring System panels in the Control Room. Lead shielding is provided to reduce the background level to where it does not interfere with the detector's sensitivity. The filter paper mechanism, an electro-mechanical assembly which controls the filter paper movement, is provided as an integral part of the detector unit.

11.2.3.3 Containment or Containment System Vent - Radiogas Monitor (R-12)

This monitor is provided to measure gaseous gamma radioactivity in the Containment, and to ensure that the radiation release rate during purging is maintained below specified limits. High gas radiation level initiates closure of the Containment purge supply and exhaust duct valves.

This monitor has a measuring range of 4.31E-7 to 4.31E-1 μCi/cc.

A continuous air sample is taken from the Containment atmosphere or the purge exhaust after it passes through the air particulate monitor, and draws the sample through a closed, sealed system to the gas monitor assembly. The sample is constantly mixed in the fixed, shielded volume, where it is counted by a scintillation detector sensitive to both gamma and beta activity. The sample is then returned to the Containment, the Containment System vent or the Auxiliary Building exhaust.

The detector assembly is in a completely enclosed housing mounted in a constant volume gas container. Lead shielding is provided to reduce the background level to a point where it does not interfere with the detector's sensitivity. The detector output is transmitted to the Radiation Monitoring System Panels in the Control Room.

The Containment air particulate and radioactivity gas monitors (R-11 and R-12) have assemblies common to both channels. They are described as follows:

1. The flow control assembly includes a pump unit and selector valves that provide a representative sample (or a "clean" sample) to the detector.
2. The pump unit consists of:

- A pump to obtain the air sample.
- A flowmeter to indicate the flow rate.
- A mass flow controller control valve to provide flow adjustment.
- A flow alarm assembly to provide low and high flow alarm signals

3. Selector valves are provided to direct the desired sample to the detector for monitoring and to block flow when the channel is in maintenance or "purging" condition.
4. A pressure sensor is provided to protect the system from high-pressure transients. This unit automatically closes the inlet and outlet valves upon a high-pressure condition.
5. Detector purging is accomplished with a valve control arrangement whereby the normal sample flow is blocked and the detector purged with a "clean" sample. This facilitates detector calibration by establishing the background level and aids in verifying sample activity level.
6. The flow control panel in the Control Room radiation monitoring racks permits remote operation of the flow control assembly. By operating a sample selector switch on the control panel, either the Containment or the Containment System vent sample may be monitored.

Alarm lights are actuated by the following:

- Flow alarm assembly (low or high flow)
- The pressure sensor assembly (high pressure)
- The filter paper sensor (paper drive malfunction)
- The pump power control switch (pump motor on)

11.2.3.4 Containment System Vent Air Activity Monitor (R-21)

The Containment System vent air activity monitor is designed primarily as a backup to the R-11/R-12 detector systems. Should R-11/R-12 be out of service, R-21 allows Containment air sampling and radioactivity analysis to be performed. This monitor system continuously monitors the Containment vent for iodine, particulate, and gas activity. The detector system consists of a sample line and pump. The vent air is drawn through a fixed particulate filter, a charcoal filter, and an off-line gas monitor in series. The off-line gas monitor is a scintillation detector sensitive to both gamma and beta activity.

The sample tank design provides a cyclonic airflow around the detector axis to preclude stagnancy within the sensing volume. The detector output is transmitted to the Radiation Monitoring System panels in the Control Room.

The charcoal filter for this channel is for measuring the accumulation of iodine isotope activity. The particulate filter is for the collection of particulate activity such as Cs-134 and Cs-137. Analysis of these filters is accomplished in the Count Room. These filters additionally serve to protect the sensitive sample volume chamber of the radiogas detector.

A high radiation alarm provides a closure signal to the Containment purge supply and exhaust valves. This monitor has a measuring range of 4.31E-7 to 4.31E-1 μCi/cc.

During routine fuel handling within Containment, ventilation air discharge passes through particulate filters. This discharge is monitored by two redundant Radiation Monitoring System channels (R12 and R21). An alarm by either of these channels will initiate containment ventilation isolation. Manual realignment is subsequently required to place the system back into operation utilizing the charcoal filters.

During these operations there is direct communication between the refueling group and the Control Room. If a fuel assembly were damaged during handling, the physical configuration of the duct system requires a 65-foot free air transport of the radioactivity to the duct entrance before release from Containment. This assures a reasonable interval between the time of initial release and discharge to the environment. In view of this, the most probable mechanism for Containment isolation would be manual activation by the Control Room upon request from the refueling group, rather than through the aforementioned automatic Containment Isolation System.

Considering the least probable case of containment isolation initiated by the Radiation Monitoring System, the large transport distance would preclude highly concentrated puffs. The response time for system isolation by radiation alarm is about four seconds, which includes the effects of signal delay. This limits the potential for a significant release before isolation.

11.2.3.5 Auxiliary Building Vent Monitors (R-13, R-14)

The Auxiliary Building vent monitors are used to monitor the Auxiliary Building vent flowpath on a continuous basis. The detectors are used to measure airborne radioactivity in the air as it is discharged out the stack. An off-line sampler is used to monitor and sample the Auxiliary Building vent stack. Upon receipt of a high radiation alarm, the system performs the following functions:

1. Shuts down normal Auxiliary Building ventilation.
2. Activates the Special Zone Auxiliary Building ventilation.
3. Initiates isolation of all normal ducting to the Auxiliary Building vent stack.
4. Closes the waste gas decay tank gas release valve.
5. Reroutes R11/12 sample exhaust flow from Auxiliary Bldg. vent to Containment.
6. Isolates the 2 inch containment depressurization line and stops the 2 inch containment supply blower.
7. Automatically diverts the Spent Fuel Pool Ventilation System exhaust through its charcoal filter banks.
8. Automatically isolates the Waste Gas Analyzer via redundant isolation valves MG(R)-560, MG(R)-561, MG(R)-562 and MG(R)-563.

An impedance matching circuit is used to match the signal source to the coaxial cable and transmit an alarm signal to the Control Room, where it is recorded on multipoint recorders and alarms on high activity.

Additionally, a sampler consisting of an isokinetic nozzle inserted in the vent to provide a representative sample to series connected particulate and charcoal collection filters is included. The charcoal filter is used for the accumulation of iodine isotope activity. The particulate filter is used for the collection of particulate activity such as Cs-134 and Cs-137.

Remote indication and annunciation are provided on the Waste Disposal System control board. A high level alarm shuts down normal ventilation fans, except Spent Fuel Pool Ventilation System fans; activates the Auxiliary Building Special Ventilation System; diverts exhaust from the Spent Fuel Pool Ventilation System through charcoal filter banks; initiates isolation of all ducting to the Auxiliary Building vent, with the exception of the Special Zone Ventilation discharge and the Spent Fuel Pool Ventilation discharge; and closes the gas release valve of the gas decay tanks.

This monitor has a measuring range of 4.31E-7 to 4.31E-1 μCi/cc.

11.2.3.6 Condenser Air Ejector Gas Monitor (R-15)

The condenser air ejector gas monitor is used to monitor the condenser air ejector discharge flow path on a continuous basis. The condenser air ejector discharges to the Auxiliary Building vent stack for HEPA filtration prior to release. The detector consists of a gamma scintillation tube placed in-line in the discharge flow path. The detector is designed to measure the gamma activity of the non-condensable gases removed by the air ejector. A high alarm on R-15 initiates automatic action to ensure that the three-way control valve located in the air ejector discharge header is aligned to the Auxiliary Building vent stack. Since the plant is normally run in this mode, a high alarm will not normally affect this valve. The high alarm also initiates closure of the steam generator blowdown sample isolation valves and the steam generator blowdown isolation valves.

A gamma sensitive scintillation detector is inserted into a drywell in an in-line fixed volume container, which includes adequate shielding to reduce the background radiation to where it does not interfere with the detector's maximum sensitivity. This monitor has a measuring range of 2E-7 to 5E-3 μCi/cc.

11.2.3.7 Control Room Ventilation Monitor (R-23)

This channel continuously monitors the Control Room environment for an indication of airborne activity entering through the ventilation system. The detector is a beta-sensitive plastic scintillator that is mounted in the air supply duct.

Readout is in the Control Room on multipoint recorders and at a rate meter station with high-low alarm setting. High alarm circuits actuate the necessary dampers and fans to isolate the Control Room environment and recirculate the air through a PAC filtering system. Redundant air intakes are provided to allow for any makeup requirement.

This monitor has a measuring range of 4.31E-7 to 4.31E-1 μCi/cc.

11.2.3.8 Residual Heat Removal Pump Pit Monitor (R-22)

This monitor provides continuous monitoring of the exhaust air from the RHR pump pits for indication of pump leakage while circulating liquid containing high gaseous activity.

The detector is a beta-sensitive plastic scintillator mounted directly in an off-line sampler. The sample volume chamber design provides a cyclonic airflow through the detector to preclude stagnation within the sensing volume. The detector output is transmitted to the Radiation Monitoring System panels in the Control Room. The detector has a measuring range of 4.31E-7 to 4.31E-1 μCi/cc.

A high radiation alarm alerts the operator so that a timely transfer to the standby pump may be made. No automatic action is initiated by a high alarm, but operator action is assumed to occur if an RHR pump is leaking.

11.2.3.9 Containment Fan Coil Water Monitor (R-16)

The Containment fan coil unit water monitor is designed to monitor the fan coil cooling water (service water) discharge for gamma activity. The fan coil cooling water discharge returns to the lake via the Circulating Water System. The detector system consists of a gamma-sensitive scintillation detector mounted in an in-line sample chamber. The sample chamber receives a continuous sample from the fan coil discharge headers. One sample line is connected to the discharge header from the 1A and 1B fan coil units, with a similar arrangement for the 1C and 1D units. A high alarm requires operator action to sequentially isolate each of the four fan coil units in order to determine the faulted unit.

The range of this monitor is 4E-8 to 5E-2 μCi/ml.

11.2.3.10 Component Cooling System Liquid Monitor (R-17)

This channel continuously monitors the Component Cooling System for radiation indicative of a leak of reactor coolant from the RCS and/or the Residual Heat Removal (RHR) System to the Auxiliary Coolant System. The detector system consists of an in-line T-type monitor located in the pumps discharge header downstream of the 1A and 1B component cooling water heat exchangers.

The range of this monitor is 1E-5 to 1E-2 μCi/ml.

11.2.3.11 Waste Disposal System Liquid Effluent Monitor (R-18)

This channel continuously monitors all Waste Disposal System liquid releases from the plant. Automatic valve closure action is initiated by this monitor to prevent further release after a high radiation level is indicated and alarmed. The detector assembly consists of a scintillation detector located in-line in the discharge header of the 1A and 1B waste condensate pumps. Remote indication and annunciation are provided on the Waste Disposal System local control board and in the Control Room.

The range of this monitor is 4E-8 to 5E-2 μCi/ml.

11.2.3.12 Steam Generator Blowdown System Liquid Sample Monitor (R-19)

This channel monitors the liquid phase of the secondary side of the steam generator for radiation, which would indicate a primary-to-secondary system leak, providing backup information to the condenser air ejector gas monitor. Samples from the bottom of each of the two steam generators are mixed in a common header and the common sample is continuously monitored by a scintillation counter and sample volume chamber assembly. Upon indication of a high radiation level, each steam generator is individually sampled in order to determine the source. This sequence is achieved by manually selecting the desired steam generator to be monitored.

The steam generator blowdown and air ejector radiation monitors are interconnected, such that either monitor isolates the blowdown and reroutes the air ejector exhaust.

A high radiation signal closes the isolation valves in the blowdown lines and sample lines.

The range of this monitor is 4E-8 to 5E-2 μCi/ml.

11.2.3.13 Service Water Monitor (R-20)

This channel continuously monitors the service water return path from the spent fuel pool and component cooling heat exchangers. A scintillation counter and sample volume chamber assembly monitors these effluent discharges. An increase above ambient radiation levels would indicate a leak across one of these heat exchangers and selective component isolation would then be used to locate the malfunction.

System readout is in the Control Room on multipoint recorders, a rate meter station in the Control Room with a high-low alarm setting, and a rate meter station at the detector location. A high level alarm is annunciated in the Control Room.

The range of this monitor is 4E-8 to 5E-2 μCi/ml.

In channels R-16, R-17, R-18, R-19 and R-20 a photo-multiplier tube scintillation crystal (Na-I) combination, mounted in a hermetically sealed unit, is used for liquid effluent radiation actuation. Lead shielding is provided to reduce the background level so it does not interfere with detector's sensitivity. The inline fixed volume container is an integral part of the detector unit. In channel R-17, the detector is inserted into a dry well in the Component Cooling System piping.

11.2.3.14 Auxiliary Process Radiation Monitoring System

The Auxiliary Process Monitoring System consists of two sets of components, which have been installed since plant construction. The motivating force behind many of the additional monitors was the result of lessons learned from TMI-2. These components have been installed for the purpose of an expanded, more reliable radiation monitoring capability (see NRC Order and NRC SERs in Reference 2, Reference 3, and Reference 4).

The first set of components is a group of eight high and low radiation monitors. These monitors are area-type monitors, which have been installed on the outside of process flow piping. A pair of monitors, one high range and one low range, are located on the outside of the containment vent ducting, the Auxiliary Building vent ducting, main steam 1A piping, and main

steam 1B piping. Each detector has a local readout and Control Room readout, with recorders also located in the Control Room. These radiation monitors are as follows:

Channel	Area Monitor
R-31	Steam line 1A (low range)
R-32	Steam line 1A (hi range)
R-33	Steam line 1B (low range)
R-34	Steam line 1B (hi range)
R-35	Auxiliary building vent (low range)
R-36	Auxiliary building vent (hi range)
R-37	Containment building vent (low range)
R-38	Containment building vent (hi range)

The second set of components are a pair of SPING-4 monitors. The SPING-4 is a self-contained microprocessor-based radiation detection system used to monitor for particulate, iodine, and noble gas activity in the air. The two SPING-4 Process Monitors are installed off-line in the containment vent stack and the Auxiliary Building vent stack. All SPING system detectors are tied to the central control consoles for monitoring of each SPING-4 stack process monitor, which contains nine individual detectors. The two SPING-4 Process Monitors and the nine individual detectors are as follows:

Channel	Area Monitor
01	Auxiliary Building vent ducting (SPING-4)

Address Code	Detector
01-01	Beta particulate
01-02	Alpha particulate
01-03	Iodine
01-04	Iodine background
01-05	Lo-range gas
01-06	Gamma area monitor

Address Code	Detector
01-07	Mid-range gas
01-08	Gas background
01-09	Hi-range gas

Channel	Area Monitor
02	Containment Building vent ducting (SPING-4)

Address Code	Detector
02-01	Beta particulate
02-02	Alpha particulate
02-03	Iodine
02-04	Iodine background
02-05	Lo-range gas
02-06	Gamma area monitor
02-07	Mid-range gas
02-08	Gas background
02-09	Hi-range gas

Information from the SPING-4 process monitors is available at either of the central control consoles, which are located in the Radiation Protection Office and the Radiological Analysis Facility in the Technical Support Center.

11.2.3.15 Area Radiation Monitoring System

There are three area radiation monitoring systems providing continuous radiological surveillance of critical plant systems and work areas. Detectors are located in Containment, the Auxiliary Building and the Technical Support Center. The system provides operating personnel with early warning of certain plant malfunctions which might lead to a radiological health hazard or plant damage.

The General Area Radiation Monitoring System consists of eight channels, which monitor radiation levels to various areas of the plant. These are as follows:

Channel	Area Monitor
R-1	Control Room
R-2	Containment (by personnel hatch)
R-4	Charging pump room
R-5	Fuel handling area
R-6	Sampling room
R-7	In-Core instrument seal table area
R-9	Reactor coolant letdown line
R-10	New fuel pit (criticality monitor)

Each channel consists of a fixed position gamma sensitive GM tube or ion chamber (R-5, R-10) detector. The detector output is amplified and the log count rate is determined by the integral amplifier at the detector. The radiation level is indicated locally at the detector, and in the Control Room where it is recorded.

High radiation alarms are displayed on the radiation monitoring panels in the Control Room, and at the detector location. The Control Room annunciator provides a single window, which alarms for any channel detecting high radiation. Verification of which channel has alarmed is made at the Radiation Monitoring System panels. A remotely operated, long half-life radiation check source is provided in each channel. The source strength is sufficient to produce an upscale meter indication above background. Table 11.2-7 and 11.2-8 contain the channel data pertinent to each detector.

The computer-indicator module amplifies the radiation level signal, as computed by the low-level amplifier, for indication and recording. The module also provides controls for actuation of the channel check source.

A meter is mounted on the front of each computer indicator module and is calibrated logarithmically from 0.1 mR/hr to 100 R/hr for channels R-1 through R-10.

Radiation Monitoring System panel alarms consist of an indicator light for high radiation and a light to annunciate detector failure or loss of signal. The remote meter and alarm assembly at the detector contains a red indicator light that is actuated on high radiation. The criticality monitor will actuate a special evacuation alarm in the required areas.

The second area Radiation Monitoring System consists of six channels (listed below) which were installed after six years of operation as a result of needs identified through experience. The original equipment supplier was Eberline. One detector, R-30, is an ion chamber. The remainder are all GM tube-type detectors. Local indication is available near the detectors. A local alarm is available only on channel R-30.

Remote indication is not available and trend data are not recorded for the following channels:

Channel	Area Monitor
R-25	Rad-waste drum area
R-26	SGBT ion exchange filter room
R-28	Compacted drum storage area
R-29	SGBT monitor tank room
R-30	Reactor cavity sump C
R-39	Sludge intercept filter area

The third Auxiliary Area Radiation Monitoring System consists of 23 channels. This system was installed as a result of lessons learned after TMI and NRC requirements. The original equipment suppliers were Eberline and General Atomic. The detectors are ion chambers and energy compensated GM tubes. Local readout is available at field mounted data acquisition modules and two central control consoles. An additional, five portable cart mounted beta air monitors can be tied into the system and can be read out at either central control console. High radiation alarms are displayed at the two central control consoles. Historical data is stored at the data acquisition modules via a microcomputer. Two recorders in the Control Room are provided for the wide range containment monitors (R-40 and R-41). These two monitors are designed to operate in a post-LOCA environment. The Auxiliary Area Radiation System consists of the following:

Address Code	Area Monitor
03-01	Waste disposal
03-02	Post accident sampling room
03-03	Component cooling heat exchanger
04-01	Machine Shop
04-02	Monitor room

Address Code	Area Monitor
04-03	Make-up demineralizer
04-04	I&C Storage Area
05-01	RHR pump pit
05-02	Radwaste compactor
05-03	Auxiliary Building loading dock
06-01	I & C Shop
06-02	Shield building vent filters
06-03	Control Room A/C vent filters
06-04	Containment ventilation exhaust filters
06-05	Zone SV exhaust filters
07-01	RAF count room
07-02	Technical Support Center
07-03	Technical Support Center Stairwell
08-01	Sulfuric acid storage tank
08-02	Containment spray pumps
08-03	Heating boiler

Instrument Number	Area Monitors
2906401	1B containment hi level radiation monitor (R-41)
2906501	1A containment hi level radiation monitor (R-40)

11.2.3.16 Main Steam Line Primary to Secondary Leakage Monitors (R-42, R-43)

These two channels continuously monitor the N-16 (nitrogen) concentration in both of the main steam lines using detectors, which are placed just outside of containment. In 2001, R-42 was installed near main steam 1A and R-43 was installed near main steam 1B. No automatic actions or automatic controls are associated with either of these channels. These channels will provide an early indication of primary to secondary leakage similar to R-15 and R-19. Installation of these channels will meet the EPRI PWR Primary-To-Secondary Leak Guidelines (TR-104788-R2).

11.2.3.17 Radiation Monitoring System-Control Room Panel

All of the Control Room system equipment for one unit is centralized in three panels. High reliability and ease of maintenance are emphasized in the design of this system. Sliding channel drawers are used for rapid replacement of units, assemblies and entire channels. It is possible to completely remove the various chassis from the panels.

11.2.3.18 Recording

Data from each of the Control Room monitors is recorded by an electrical storage device.

11.2.3.19 Monitor Ranges

The ranges of the radiation monitors are given in Table 11.2-7. Calibration curves showing count rate versus radiation activity (μCi/cc) are provided for all isotopes to be measured.

11.2.3.20 Operating Conditions

Table 11.2-8 indicates the detector operating condition during normal operation. Where fluid temperature is too high for the monitor, a cooling device is included. The different operating temperature ranges are within the design limits of the sensors.

11.2.3.21 Radiation Protection Program

11.2.3.21.1 Personnel Monitoring

A permanent record of accumulated total effective dose equivalent (TEDE) exposure received by individuals is maintained per 10 CFR 20 requirements. TEDE is the sum of the deep-dose equivalent (DDE) and the committed effective dose equivalent (CEDE). DDE exposures are provided by the interpretation of TLD chips. Electronic dosimeters, or in some cases self-reading dosimeters, provide day-by-day indication of DDE exposure.

All persons who are required to be monitored are issued beta-gamma TLD badges and are required to wear such badges at all times while within the radiologically controlled areas of the plant. Personnel who are issued TLD badges pick them up prior to entry into the radiologically controlled area and deposit them after leaving the radiologically controlled area at the Radiation Protection Office.

Special or additional TLD badges are issued at the discretion of Radiation Protection personnel.

The TLD badges are processed on a routine basis at specified intervals. Badges are processed immediately whenever it appears that an over exposure may have occurred, or any time deemed necessary by Radiation Protection personnel.

An electronic dosimeter or a self-reading dosimeter is issued for entry into the Radiologically Controlled Area in addition to a TLD badge for individuals whose work conditions

make a day-to-day indication of exposure desirable. Electronic dosimeters require the Radiological worker to sign in on the assigned Radiation Work Permit (RWP) using control stations outside of the Radiation Protection Office (RPO). If self-reading pocket dosimeters are used they are read, recorded and re-zeroed regularly and are issued for entry into the RCA when deemed necessary by Radiation Protection. Electronic dosimeters are reset by signing out on the control stations located outside the RPO. Dosimeter and TLD records furnish the exposure data for the administrative control of radiation exposure.

11.2.3.22 Personnel Bio-Assay Program

The Personnel Bio-Assay Program at the Kewaunee Power Station consists of whole-body counting and Passive Monitoring with a portal monitor. Whole body counts are made for select personnel routinely exposed to radioactive materials.

11.2.3.23 Personnel Protection Equipment

Personnel entering the radiologically controlled area are required to wear protective clothing as required by the radiation work permit. The nature of the work to be done and the conditions of the area are the governing factors in the selection of protective clothing to be worn by individuals.

11.2.3.24 Personnel Respiratory Protection

The Kewaunee Power Station is designed to minimize concentrations of airborne radioactivity due to inadvertent leaks, spills or other causes by filtered ventilation systems and isolation of equipment in compartments. Further, a radiation protection program is provided to minimize airborne concentrations by detecting and controlling potential sources of airborne radioactivity. The normal concentrations present in areas occupied by personnel are much less than the derived air concentrations (DACs) and the use of respiratory protection equipment is normally not necessary.

Usage of respiratory protection devices will be evaluated under unusual situations arising from plant operations to limit CEDE (i.e. TEDE) below 10 CFR 20 requirements. When it is not practicable to apply process or other engineering controls to control the concentrations of radioactive material in the air, consistent with maintaining the TEDE ALARA, the necessary protective devices will be specified and monitored by radiation protection personnel.

Three general types of respiratory protective equipment are utilized in the respiratory protection program. The type used for a particular circumstance is determined by the concentration in the air and the protection factor needed to prevent personnel from breathing or being exposed to airborne radioactivity in excess of that specified by 10 CFR 20, Section 20.1201.

The three general types of respiratory protective equipment intended for use are:

1. Air-Purifying Respirators

   These units are utilized for protection against airborne particulates only.

2. Atmosphere Supplying, Air-Line Respirators

   These units provide protection from radioactive particulates, gases and vapors. These respirators use the plant's Service Air System to supply a filtered and regulated source of breathing air to either a full-face piece or hood.

3. Atmosphere Supplying, Self-Contained Breathing Apparatus (SCBA)

   These respirators utilize back mounted compressed air cylinders to supply a full-face piece in the pressure-demand mode of operation. The SCBA provides protection against radioactive particulates, gases and vapors and may also be used in atmospheres considered Immediately Dangerous to Life or Health.

A Cascade System consisting of large cylinders of compressed air exists for refilling the SCBA cylinders on an as-needed basis.

After each use, non-disposable respirators are cleaned and sanitized before being reissued. The Radiation Protection Group cleans, maintains and controls the use of all respiratory protection equipment. Decontaminating and sanitizing agents are utilized which prevent damage to sealing surfaces and transparent face pieces. Following air drying, the respirators are checked for radioactive contamination and re-cleaned or disposed of if necessary. Each respirator is then visually inspected for mechanical degradation, and stored in a clean, sealed plastic bag.

Routine maintenance on respiratory equipment is performed, as the need becomes apparent through visual inspection following cleaning. For SCBA respirators, the ability to provide a sufficient, regulated air supply is periodically tested. For airline respirators, the quality of the breathing air is also periodically tested by analyzing samples of the Service Air System.

Each individual whose work requires the use of respiratory protection is trained in proper methods of donning and use of the various types of equipment. Initial training is done by training group personnel. At this time, individual problems, such as interference with sealing due to eyeglasses, will become apparent. Periodic retraining is done by the training group based on an individual's need for respiratory equipment use.

In accordance with 29 CFR 1910.134, a Licensed Health Care Professional performs evaluations of medical fitness for individuals requiring the use of respiratory protective equipment. Quantitative mask fit tests are administered annually.

If prolonged use of respiratory equipment is necessary, personnel are relieved at reasonable intervals such that usage of the equipment does not endanger personnel or discourage observance of proper work and safety procedures.

11.2.3.25 Action Levels

Areas are posted as Airborne Radioactivity Areas whenever an individual present could exceed, during the hours in a week, an intake of 0.6 percent of an ALI or 12 DAC-hrs. ALI and DAC values are given in Table 1 of Appendix B of 10 CFR 20.

The use of respirator protection devices will be evaluated pursuant to 10 CFR 20.1702 consistent with maintaining the TEDE ALARA. When respirators are deemed necessary, 10 CFR 20.1703 shall govern their proper usage.

11.2.3.26 Facilities and Access Provisions

The plant site is divided into various areas depending on radiation and/or contamination levels present.

The Clean Area includes all areas in the plant, which are not designated as the Radiologically Controlled Area and have radiation and contamination levels within the limits set for the Clean Area.

The Radiologically Controlled Area includes all areas in the plant in which radiation and/or contamination levels or the potential of such levels exist above those limits as stated for the Clean Areas. All entrances to the Radiologically Controlled Areas are posted as such and limited to emergency access only. Normal entry to and exit from the Radiologically Controlled Area is through the designated RPO only.

Exclusion Areas include all areas within the Radiologically Controlled Areas found to have levels of radiation and/or contamination above those specified for Radiologically Controlled Areas. These are Radiation, High Radiation, Very High Radiation, Airborne Radioactivity, Contaminated, and Radioactive Materials Areas. Each area is posted with its respective sign and requirements.

The Unrestricted Area includes all property owned by DEK immediately adjacent to and surrounding the Restricted Area. Normal environmental radiation and control procedures apply here.

The general arrangement of the service facilities is designed to provide adequate personnel decontamination and change areas.

Locker rooms are used to store items of personal clothing not required or allowed in the Radiologically Controlled Area. A supply of various protective clothing items for personnel is maintained within the RCA.

Personnel contamination monitors are located outside the Radiation Protection Office (RPO). All personnel are required to survey themselves on leaving the Radiologically Controlled Area.

A decontamination shower and wash sink are located adjacent to the RPO. Decontamination facilities are described in Section 9.7.3.

The fuel storage area has facilities to handle the decontamination of large items of equipment. The decontamination area contains service facilities.

All visitors to the RCA are required to wear electronic dosimeters, or in some cases, self-reading dosimeters, TLD badges, or be provided with an escort having personnel monitoring devices.

Administrative and physical security measures are employed to prevent unauthorized entry of personnel to any High Radiation Area. These measures include the following:

Personnel are restrained from entry by locks, interlocks, or similar devices that alert the Control Room of entries into High Radiation Areas (giving exposure rates greater than 1000 mREM/hr). Administrative control requires the issuance of a RWP prior to entry to any High Radiation Area.

1. Any individual or group of individuals entering a High Radiation Area is provided with a radiation-monitoring device, which continuously indicates the radiation, dose rate in the area.
2. Personnel are required to wear protective clothing as designated by Radiation Protection personnel for entry into a contaminated area.

Normal access into the Radiologically Controlled Area is through electronic dosimeter (ED) activated turnstiles. Workers are required to sign onto an RWP using the sign-on terminals. After the system activates the ED, the workers proceed through the turnstiles. The ED must be turned on to activate the turnstile. Radiation protection personnel can provide guidance and review applicable RWP requirements.

11.2.3.27 Instrumentation

Laboratory facilities are provided for the Radiation Protection Group. These facilities include both laboratory and calibration rooms. A Counting Room is equipped to analyze routine air sample and contamination swipe surveys. The RPO also serves as a central location for portable radiation survey instruments, respiratory protection equipment and contamination control supplies.

The survey equipment is supplemented with radioanalytical instrumentation located in the Counting Room and Radioanalytical Facility. Portal monitors are located in the Security Building as a final check on all personnel leaving the plant.

The types of portable radiation survey instruments available for routine monitoring functions are adequate for the performance of the surveys required by 10 CFR 20.

Survey and radioanalytical instruments are periodically calibrated. Calibration and maintenance records are recorded for each instrument.

11.2.4 Evaluation

The evaluation of the dose to operators in the Control Room under accident conditions is documented in Chapter 14 and Reference 6.

Although not credited in the radiological analyses, in an effort to prevent a post-accident IN VIVO dose to the thyroid glands of operating personnel, iodide can be made available to personnel early in the accident scenario. This medication, when taken six hours prior to an exposure to radioiodine, gives a minimum protective effect of 97 percent with respect to the localization of radioiodine in the human thyroid. The medication can be taken safely by most humans at 130 mg/day for approximately ten days.

All components necessary for the operation of the external recirculation loop following a LOCA are capable of remote manual operation from the Control Room and can be powered by the diesel generators so that it should not be necessary to enter the Auxiliary Building in the vicinity of the recirculation loops.

To determine the possible exposure that an operator could receive under accident conditions while operating a manual backup item (e.g., valve), it is estimated rather conservatively that it will require fifteen minutes to operate the valve. In addition, it is assumed that an additional fifteen minutes is required to get to and from the manual equipment. The total integrated whole body deep dose equivalent that an operator would receive performing the above operation would be about 8 REM. This exposure is calculated at one-half hour following the accident and assumes that the equipment being operated or serviced is adjacent to the Shield Building. The basis for such a calculation relating to the RHR System is given in Table 11.2-9 and Figure 11.2-5 and Figure 11.2-6. Exposures in the vicinity of equipment located within the Auxiliary Building would be much less due to the shielding afforded by intervening walls and structures in the Auxiliary Building.

Hazards due to the radioactive halogen gas exposure to operators in the Control Room during the course of a LOCA is minimized by providing a Control Room air conditioning system that filters all incoming air and is capable of internal recirculation within the Control Room to minimize the amount of outside air drawn into the Control Room. In the event of high radiation level in the Control Room ventilating air, makeup air from outside is shut off, and absolute and charcoal filters are placed in service on the recirculating air stream. The Control Room ventilating fans are supplied by emergency power.

If maintenance on the loop is required, such operations would be limited in duration. The radiation levels adjacent to equipment containing the sump water and fission products could be as high as 200 to 300 REM per hour shortly after the initiation of recirculation. Any emergency maintenance operations described above could be carried out using portable breathing equipment to limit the inhalation hazard.

11.2.5 Minimum Operating Conditions

All liquid waste releases are continuously monitored for gross activity during discharge to ensure that the activity concentration limits are below those specified in 10 CFR 20 for unrestricted areas.

11.2.6 Tests and Inspections

Complete radiation surveys were made throughout the Containment and Auxiliary Building during initial phases of plant start up. Survey data was taken and compared with levels at power levels of 0.01 percent, 10 percent and 100 percent of rated full power. Survey data were reviewed for conformance with design levels before increasing to the next power range. The 100 percent power readings are repeated after each refueling outage to ensure no degradation of shielding has occurred.

The radiation monitors are tested in accordance with the surveillance frequencies specified in the Technical Specifications and ODCM.

11.2 References

1. NRC Safety Evaluation Report, S. A. Varga (NRC) to C. W. Giesler (WPS), Letter No. K-83-12, January 12, 1983
2. NRC Order, S. A. Varga (NRC) to C. W. Giesler (WPS), Letter No. K-83-59, March 14, 1983
3. NRC Safety Evaluation Report, M. B. Fairtile (NRC) to D. C. Hintz (WPS), Letter No. K-85-14, January 9, 1985
4. NRC Safety Evaluation Report, S. A. Varga (NRC) to D. C. Hintz (WPS), Letter No. K-85-7, January 2, 1985
5. “Iodine-131 Behavior During the TMI-2 Accident” *NSAC/30*, Nuclear Safety Analysis Center, September 1981
6. WCAP-16040-P, Power Uprate Project Kewaunee Nuclear Power Plant NSSS/BOP Licensing Report, February 2003

Table 11.2-1
Shielding Design Zone Classifications

Zone	Condition of Occupancy	Maximum External Dose Rate (1% failed fuel) mrem/hr
0	Unlimited occupancy	0.1
I	Normal continuous occupancy	1.0
II	Periodic occupancy	2.5
III	Controlled occupancy	15.0
IV	Controlled access	>15.0

Table 11.2-2
Primary Shielding Neutron Fluxes and Design Parameters
Calculated Neutron Fluxes - Core Midplane

Energy Group	Incident Fluxes (n/cm2/sec)	Leakage Fluxes n/cm2/sec
E > 1 Mev	2.94E+9	9.0E+1
5.3 Kev < E ≤ 1 Mev	3.2E+10	2.0E+2
0.625 ev < E ≤ 5.3 Kev	1.91E+10	4.0E+2
E < 0.625 ev	4.45E+9	3.9E+3
Design Parameters		
Core thermal power, MWt		1721.4[1]
Active core height, in.		144
Effective core diameter, in.		96.5
Baffle wall thickness, in.		1.125
Barrel wall thickness, in.		1.75
Thermal shield wall thickness, in.		3.6
Reactor vessel ID, in.		132.00
Reactor vessel wall thickness, in.		6.50
Reactor coolant cold-leg temperature, °F		544
Reactor coolant hot-leg temperature, °F		607
Maximum thermal neutron flux exiting primary concrete, n/cm2-sec		4E+3
Reactor shutdown radiation levels exiting primary concrete, mr/hr		< 15

1. 1721.4 MWt was the original design basis core power used in shielding and dose calculations. Evaluations performed to support operation at a core power of 1772 MWt determined that the values determined using the original core power remained bounding for operation at 1772 MWt.

Table 11.2-3
Secondary Shielding Design Parameters

Core thermal power, MWt	1721.4[1]
Reactor coolant liquid volume, ft^3	6450
Reactor coolant transit times:	
Core, sec	0.9
Core exit to steam generator inlet, sec	2.0
Steam generator inlet channel, sec	0.6
Steam generator tubes to vessel inlet, sec	5.3
Vessel inlet to core, sec	2.1
Total out of core, sec	10.0
Full power radiation levels outside secondary shielding, mr/hr	< 1

1. 1721.4 MWt was the original design basis core power used in shielding and dose calculations. Evaluations performed to support operation at a core power of 1772 MWt determined that the values determined using the original core power remained bounding for operation at 1772 MWt.

Table 11.2-4
Accident Shielding Design Parameters

Core thermal power, MWt	1721.4[1]
Minimum full power operating time, days	650
Equivalent fraction of core melting	1.0
Fission product fractional releases:	
Noble gases	1.0
Halogens	0.5
Remaining fission product inventory	0.01
Cleanup rate following accident	0
Maximum deep dose equivalent (4-week exposure) in the Control Room, rem	< 2.5

1. 1721.4 MWt was the original design basis core power used in shielding and dose calculations. Evaluations performed to support operation at a core power of 1772 MWt determined that the values determined using the original core power remained bounding for operation at 1772 MWt.

Table 11.2-5
Fuel Handling Shielding Design Parameters

Total number of fuel assemblies	121
Minimum full power exposure, days	1000
Minimum time between shutdown and fuel handling, hr	24
Radiation levels adjacent to spent fuel pool, mr/hr	1.0
Radiation levels at water surface, mr/hr	2.5

Table 11.2-6
Principal Auxiliary Shielding

Component	Concrete Shield Thickness, Ft-In.
Demineralizers	3 – 9
Charging pumps	2 – 6
Liquid holdup tanks	2 – 9
Volume control tank	4 – 0
Reactor coolant filter	2 – 6
Gas stripper	2 – 0
Gas decay tanks	4 – 0
Gas compressor	3 – 0
Waste evaporator	2 – 6
Liquid waste holdup tank	2 – 0
Design parameters for the auxiliary shielding include:	
Core thermal power, MWt	1721.4[1]
Fraction of fuel rods containing small clad defects	0.01
Letdown flow (normal purification), gpm	40
Effective cesium purification flow (intermittent), gpm	4.0
Cut-in concentration deborating demineralizer, ppm	160
Radiation levels outside Auxiliary Building, mr/hr	< 1
Radiation levels in the building outside shield walls, mr/h	< 2.5

1. 1721.4 MWt was the original design basis core power used in shielding and dose calculations. Evaluations performed to support operation at a core power of 1772 MWt determined that the values determined using the original core power remained bounding for operation at 1772 MWt.

Table 11.2-7
Radiation Monitoring System Channel Data

Channel Number	Channel Name	Instrument Type	Sensitivity	Range	Set Points
R-1	Control Room Area Monitor	GM Tube	0.1 mR/hr	0.1 mR/hr to 100 R/hr	*
R-2	Containment Vessel Area Monitor	GM Tube	0.1 mR/hr	0.1 mR/hr to 100 R/hr	*
R-4	Charging Pump Room Area Monitor	GM Tube	0.1 mR/hr	0.1 mR/hr to 100 R/hr	*
R-5	Fuel Handling Area Monitor	Ion Chamber	0.1 mR/hr	0.1 mR/hr to 100 R/hr	*
R-6	Sampling Room Area Monitor	GM Tube	0.1 mR/hr	0.1 mR/hr to 100 R/hr	*
R-7	In-Core Instrument Seal Table Area Monitor	GM Tube	0.1 mR/hr	0.1 mR/hr to 100 R/hr	*
R-9	Reactor Coolant Letdown Line Area Monitor	GM Tube	0.1 mR/hr	0.1 mR/hr to 100 R/hr	*
R-10	New Fuel Pit (Criticality Monitor)	Ion Chamber	0.1 mR/hr	0.1 mR/hr to 100 R/hr	*
R-11	Containment Vessel or Containment System Vent-Air Particulate Monitor	Beta Scintillation Detector	1.89E12 cpm/µCi/cc based on Cs-137	1.06E-12 to 1.06E-6 µCi/cc	*
R-12	Containment Vessel or Containment System Vent-Radioactivity Gas Monitor	Beta Scintillation Detector	2.32E7 cpm/µCi/cc based on Xe-133	4.31E-7 to 4.31E-1 µCi/cc	**
R-13	Auxiliary Building Vent A Monitor	Beta Scintillation Detector	2.32E7 cpm/µCi/cc based on Xe-133	4.31E-7 to 4.31E-1 µCi/cc	**
R-14	Auxiliary Building Vent B Monitor	Beta Scintillation Detector	2.32E7 cpm/µCi/cc based on Xe-133	4.31E-7 to 4.31E-1 µCi/cc	**

Table 11.2-7
Radiation Monitoring System Channel Data

Channel Number	Channel Name	Instrument Type	Sensitivity	Range	Set Points
R-15	Condenser Air Ejector Gas Monitor	Scintillation Detector (NaI)	1.86E8 cpm/µCi/cc based on Xe-133	2E-7 to 5E-3 µCi/cc	**
R-16	Containment Fan-Coil Water Monitor	Scintillation Detector (NaI)	9.7E7 cpm/µCi/ml based on Cs-137	4E-8 to 5E-2 µCi/ml	**
R-17	Component Cooling System Liquid Effluent Monitor	Scintillation Detector (NaI)	1.0E8 cpm/µCi/ml based on Cs-137	1E-5 to 1E-2 µCi/ml	*
R-18	Waste Disposal System Liquid Effluent Monitor	Scintillation Detector (NaI)	1.0E8 cpm/µCi/ml based on Cs-137	4E-8 to 5E-2 µCi/ ml	**
R-19	Steam Generator Blowdown Liquid Sample Monitor	Scintillation Detector (NaI)	1.0E8 cpm/µCi/ml based on Cs-137	4E-8 to 5E-2 µCi/ ml	**
R-20	Service Water Monitor	Scintillation Detector (NaI)	9.7E7 cpm/µCi/ml based on Cs-137	4E-8 to 5E-2 µCi/ ml	**
R-21	Containment System Vent-Activity Monitor	Beta Scintillation Detector	2.32E7 cpm/µCi/cc based on Xe-133	4.31E-7 to 4.31E-1 µCi/cc	**
R-22	Residual Heat Removal Pump Pit Monitor	Beta Scintillation Detector	2.32E7 cpm/µCi/cc based on Xe-133	4.31E-7 to 4.31E-1 µCi/cc	*
R-23	Control Room Ventilation Monitor	Beta Scintillation Detector	2.32E7 cpm/µCi/cc based on Xe-133	4.31E-7 to 4.31E-1 µCi/cc	*
R-25	Radwaste Drumming Room - Drum Storage Area	GM Tube	0.1 mR/hr	0.1 mR/hr to 10 R/hr	*
R-26	Steam Generator Blowdown Treatment Ion Exchanger Room	GM Tube	0.1 mR/hr	0.1 mR/hr to 10 R/hr	*

Table 11.2-7
Radiation Monitoring System Channel Data

Channel Number	Channel Name	Instrument Type	Sensitivity	Range	Set Points
R-28	Compacted Radwaste Drum Storage Area	GM Tube	0.1 mR/hr	0.1 mR/hr to 10 R/hr	*
R-29	Steam Generator Blowdown Treatment Holdup Tank Room	GM Tube	0.1 mR/hr	0.1 mR/hr to 10 R/hr	*
R-30	Containment Sump “C,” below Reactor Vessel	Ion Chamber	0.5 cpm/mR/hr based on Cs-137	l00 mR/hr to 1000 R/hr	*
R-31	1A Steam Line Monitor - Lo Range	GM Tube	0.1 mR/hr	0.1 mR/hr to 10 R/hr	*
R-32	1A Steam Line Monitor - Hi Range	Ion Chamber	1 R/hr	1 R/hr to 10,000 R/hr	*
R-33	1B Steam Line Monitor - Lo Range	GM Tube	0.1 mR/hr	0.1 mR/hr to 10 R/hr	*
R-34	1B Steam Line Monitor - Hi Range	Ion Chamber	1 R/hr	1 R/hr to 10,000 R/hr	*
R-35	Auxiliary Building Vent Exhaust Stack Monitor - Lo Range	GM Tube	0.1 mR/hr	0.1 mR/hr to 10 R/hr	*
R-36	Auxiliary Building Vent Exhaust Stack Monitor - Hi Range	Ion Chamber	1 R/hr	1 R/hr to 10,000 R/hr	*
R-37	Containment Vent Exhaust Duct Monitor - Lo Range	GM Tube	0.1 mR/hr	0.1 mR/hr to 10 R/hr	*
R-38	Containment Vent Exhaust Duct Monitor - Hi Range	Ion Chamber	1 R/hr	1 R/hr to 10,000 R/hr	*
R-39	Sludge Intercept Filter Area Monitor	GM Tube	0.01 mR/hr	0.01 mR/hr to .1 R/hr	*
R-40	Containment Hi Level Radiation Monitor 1A	Ion Chamber	1E-11 Amp/RAD/hr	1 mR/hr to 1 E8 R/hr	-

Table 11.2-7
Radiation Monitoring System Channel Data

Channel Number	Channel Name	Instrument Type	Sensitivity	Range	Set Points
R-41	Containment Hi Level Radiation Monitor 1B	Ion Chamber	1 E-11 Amp/RAD/hr	1 mR/hr to 1 E8 R/hr	-
R-42	1A Main Steam Line Monitor – N16	NaI Scintillation	0.5 CPS/(1/hr)	0.5 to 5000 CPS	*
R-43	1B Main Steam Line Monitor – N16	NaI Scintillation	0.5 CPS/(1/hr)	0.5 to 5000 CPS	*
SPING 01	Auxiliary Building Stack Sampler				
01-01	Beta Particulate	Beta Scintillation	9.38 E-4 µCi	9.38 E-4 µCi to 2.21 E+1 µCi	
01-02	Alpha Particulate	Solid State Alpha	5.1 E+0 CPM	5.1 E+0 CPM to 1.2 E+6 CPM	
01-03	Iodine	Beta Scintillation	1.12 E-3 µCi	1.12 E-3 µCi to 2.63 E+1 µCi	
01-04	Iodine Background	Beta Scintillation (Part of 01-03)	CPM		
01-05	Lo Range Gas	Beta Scintillation	2.85 E-6 µCi/cc	2.85 E-6 µC/cc to 6.70 E-2 µC/cc	
01-06	Gamma Area Monitor	GM Tube	8.06 E-2 mR/hr	8.06 E-2 mR/hr to 1.90 E+3 mR/hr	
01-07	Mid Range Gas	GM Tube	1.00 E+1 CPM	1.00 E+1 CPM to 1.00 E+6 CPM	
01-08	Gas Background	GM Tube	CPM		

Table 11.2-7
Radiation Monitoring System Channel Data

Channel Number	Channel Name	Instrument Type	Sensitivity	Range	Set Points
01-09	Hi Range Gas	GM Tube	1.00 E+1 CPM	1.00 E+1 CPM to 1.00 E+6 CPM	
SPING 02	Containment Building Stack Sampler				
02-01	Beta Particulate	Beta Scintillation	1.02 E-3 µCi	1.02 E-3 µCi to 2.4 E+1 µCi	
02-02	Alpha Particulate	Solid State Alpha	5.1 E+0 CPM	5.1 E+0 CPM to 1.2 E+6 CPM	
02-03	Iodine	Beta Scintillation	1.10 E-3 µCi	1.10 E-3 µCi to 2.58 E+1 µCi	
02-04	Iodine Background	Beta Scintillation (Part of 02-03)	CPM		
02-05	Lo Range Gas	Beta Scintillation	6.38 E-6 µCi/cc	6.38 E-6 µC/cc to 1.50 E-2 µC/cc	
02-06	Gamma Area Monitor	GM Tube	9.95 E-2 mR/hr	9.95 E-2 mR/hr to 2.34 E+3 mR/hr	
02-07	Mid Range Gas	GM Tube	1.00 E+1 CPM	1.00 E+1 CPM to 1.00 E+6 CPM	
02-08	Gas Background	GM Tube	CPM		
02-09	Hi Range Gas	GM Tube	1.00 E+1 CPM	1.00 E+1 CPM to 1.00 E+6 CPM	

Table 11.2-7
Radiation Monitoring System Channel Data

Channel Number	Channel Name	Instrument Type	Sensitivity	Range	Set Points
SPING 03-01	Waste Disposal Pane Area Monitor - Hi Range	Ion Chamber	0.05 cpm/mR/hr based on Cs-137	1 R/hr to 10,000 R/hr	*
SPING 03-02	Post Accident Sampling Room Area Monitor - Int. Range	Ion Chamber	5 cpm/mR/hr based on Cs-137	10 mR/hr to 100 R/hr	*
SPING 03-03	Component Cooling Heat Exchanger Area Monitor - Hi Range	Ion Chamber	0.05 cpm/mR/hr based on Cs-137	1 R/hr to 10,000 R/hr	*
SPING 04-01	Machine Shop Area Monitor - Int. Range	Ion Chamber	5 cpm/mR/hr based on Cs-137	10 mR/hr to 100 R/hr	*
SPING 04-02	Monitor Room Area Monitor - Int. Range	Ion Chamber	5 cpm/mR/hr based on Cs-137	10 mR/hr to 100 R/hr	*
SPING 04-03	Make Up Demineralizer Area Monitor - Int. Range	Ion Chamber	5 cpm/mR/hr based on Cs-137	10 mR/hr to 100 R/hr	*
SPING 04-04	I&C Storage Area Monitor - Int. Range	Ion Chamber	5 cpm/mR/hr based on Cs-137	10 mR/hr to 100 R/hr	*
SPING 05-01	RHR Pumps Area Monitor - Hi Range	Ion Chamber	0.05 cpm/mR/hr based on Cs-137	1 R/hr to 10,000 R/hr	*
SPING 05-02	Radwaste Compactor Area Monitor - Lo Range	GM Tube	0.1 mR/hr	0.l mR/hr to 10 R/hr	*
SPING 05-03	Auxiliary Building Loading Dock Area Monitor - Int. Range	Ion Chamber	5 cpm/mR/hr based on Cs-137	10 mR/hr to 100 R/hr	*
SPING 06-01	I&C Shop Area Monitor - Lo Range	GM Tube	0.1 mR/hr	0.l mR/hr to 10 R/hr	*

Table 11.2-7
Radiation Monitoring System Channel Data

Channel Number	Channel Name	Instrument Type	Sensitivity	Range	Set Points
SPING 06-02	Shield Building Ventilation Filters Area Monitor - Hi Range	Ion Chamber	0.05 cpm/mR/hr based on Cs-137	1 R/hr to 10,000 R/hr	*
SPING 06-03	Control Room Air Conditioning Vent. Filters Area Monitor - Int. Range	Ion Chamber	5 cpm/mR/hr based on Cs-137	10 mR/hr to 100 R/hr	*
SPING 06-04	Containment Ventilation Exhaust Filters Area Monitor - Hi Range	Ion Chamber	0.05 cpm/mR/hr based on Cs-137	1 R/hr to 10,000 R/hr	*
SPING 06-05	Zone SV Exhaust Filters Area Monitor - Hi Range	Ion Chamber	0.05 cpm/mR/hr based on Cs-137	1 R/hr to 10,000 R/hr	*
SPING 07-01	RAF Count Room Area Monitor - Lo Range	GM Tube	0.1 mR/hr	0.1 mR/hr to 10 R/hr	*
SPING 07-02	Tech. Support Center Area Monitor - Lo Range	GM Tube	0.1 mR/hr	0.1 mR/hr to 10 R/hr	*
SPING 07-03	TSC Stairwell Area Monitor - Lo Range	GM Tube	01 mR/hr	0.1 mR/hr to 10 R/hr	*
SPING 08-01	Sulfuric Acid Storage Tank Area Monitor - Lo Range	GM Tube	0.1 mR/hr	0.1 mR/hr to 10 R/hr	*
SPING 08-02	Containment Spray Pumps Area Monitor - Hi Range	Ion Chamber	0.05 cpm/mR/hr based on Cs-137	1 R/hr to 10,000 R/hr	*

Table 11.2-7
Radiation Monitoring System Channel Data

Channel Number	Channel Name	Instrument Type	Sensitivity	Range	Set Points
SPING 08-03	Heating Boiler Area Monitor - Int. Range	Ion Chamber	5 cpm/mR/hr based on Cs-137	10 mR/hr to 100 R/hr	*

* Statistically significant level above background.
** Calculated in accordance with KPS Off-Site Dose Calculation Method.

Table 11.2-8
Detecting Medium and Conditions

Channel	Medium	Temperature Range (°F)
R-1	Air	50 to 120
R-2	Air	30 to 120
R-4	Air	50 to 120
R-5	Air	50 to 120
R-6	Air	50 to 120
R-7	Air	30 to 120
R-9	Air	50 to 120
R-10	Air	50 to 120
R-11	Air	30 to 120
R-12	Air	30 to 120
R-13	Air	-20 to 140
R-14	Air	-20 to 140
R-15	Air	40 to 120
R-16	Water	40 to 268
R-17	Water	30 to 160
R-18	Water	60 to 160
R-19	Water	60 to 160
R-20	Water	30 to 160
R-21	Air	30 to 120
R-22	Air	40 to 160
R-23	Air	40 to 160
R-25	Air	50 to 120
R-26	Air	50 to 120
R-28	Air	50 to 120
R-29	Air	50 to 120
R-30	Air	50 to 120

Table 11.2-8
Detecting Medium and Conditions

Channel	Medium	Temperature Range (°F)
R-31	Air	50 to 120
R-32	Air	50 to 120
R-33	Air	50 to 120
R-34	Air	50 to 120
R-35	Air	50 to 120
R-36	Air	50 to 120
R-37	Air	50 to 120
R-38	Air	50 to 120
R-39	Air	50 to 120
R-40	Air	30 to 120
R-41	Air	30 to 120
R-42	Air	50 to 120
R-43	Air	50 to 120

Table 11.2-9
Residual Heat Removal Loop Radiation Sources and Evaluation Parameters

Gamma Energy (Mev/Photon)

Decay Time	0.4	0.8	1.3	1.7	2.2	2.5	3.5
0 Hr	1.16E+7	9.31E+7	6.08E+6	3.49E+6	3.28E+6	1.21E+6	3.20E+5
0.5 Hr	1.08E+7	8.75E+7	5.38E+6	2.96E+6	2.96E+6	1.14E+6	2.69E+5
1 Hr	9.91E+6	8.12E+7	4.40E+6	2.46E+6	2.61E+6	8.52E+5	1.98E+5
2 Hr	9.13E+6	7.35E+7	3.27E+6	1.80E+6	2.14E+6	5.87E+5	1.43E+5
8 Hr	7.91E+6	5.52E+7	5.10E+5	2.96E+5	4.00E+5	9.29E+4	1.79E+4
1 Day	7.36E+6	4.98E+7	3.45E+4	1.30E+4	1.25E+5	5.03E+3	7.09E+1
1 Wk	6.80E+6	3.47E+7	8.28E+1	2.09E+2			
1 Mo	8.64E+5	3.34E+7					
6 Mo	2.96E+4	1.11E+7					
1 Yr	8.72E+2	9.34E+6					

Evaluation Parameters

1. Core thermal power, MWt	1721.4[1]
2. Percent of gap activity absorbed by the sump water:	
a. Noble gases	0
b. All others	100
3. Fission product cleanup rate	0
4. Reactor coolant volume, ft^3	6100

Table 11.2-9
Residual Heat Removal Loop Radiation Sources and Evaluation Parameters

	Gamma Energy (Mev/Photon)						
Decay Time	0.4	0.8	1.3	1.7	2.2	2.5	3.5
5. Refueling water volume, ft^3					36,760		
6. Accumulators (2), total ft^3					2300		

1. 1721.4 MWt was the original design basis core power used in shielding and dose calculations. Evaluations performed to support operation at a core power of 1772 MWt determined that the values determined using the original core power remained bounding for operation at 1772 MWt.

Intentionally Blank

Figure 11.2-1 Radiation Control Area - Basement Floor

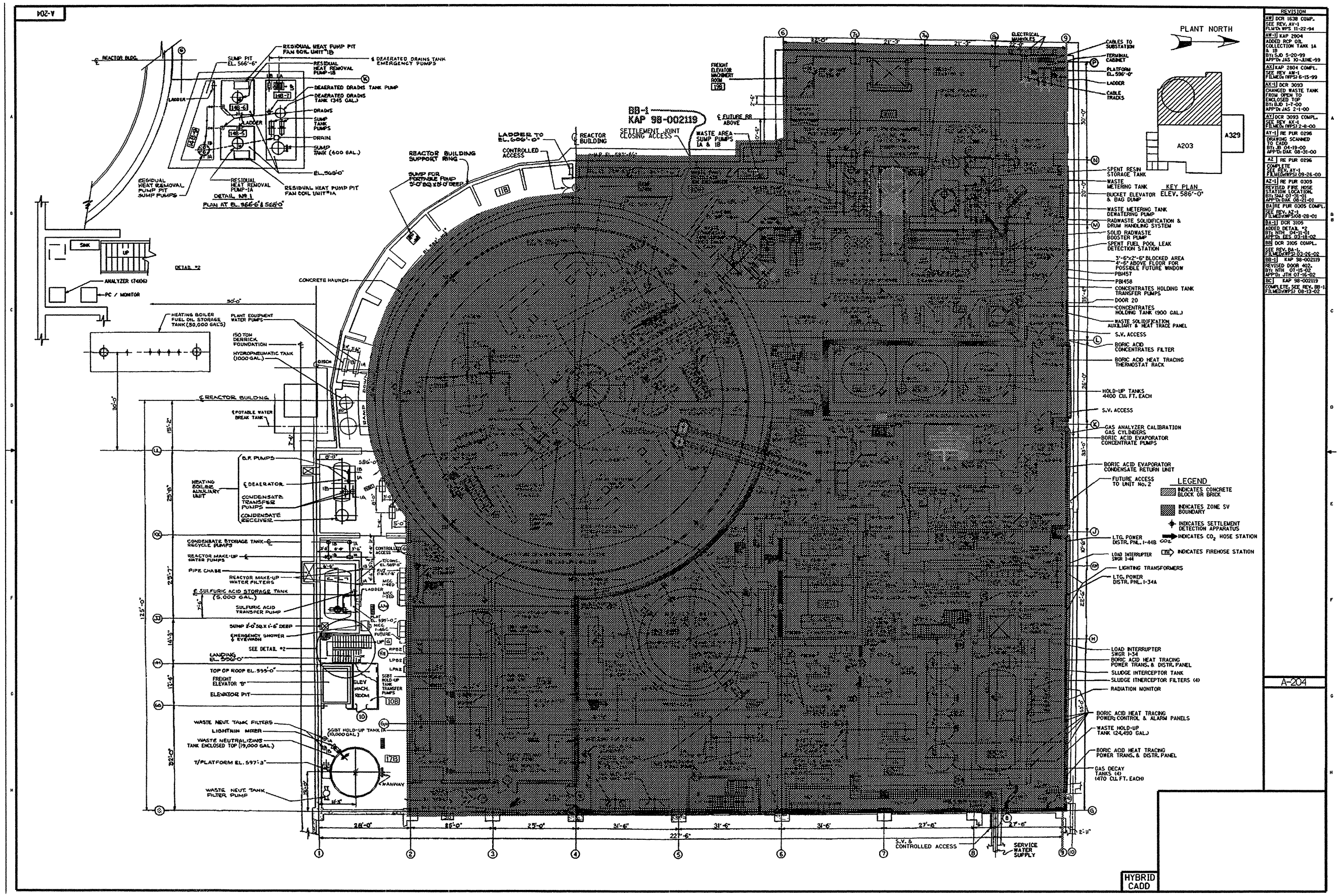

Figure 11.2-2 Radiation Control Area - Mezzanine Floor

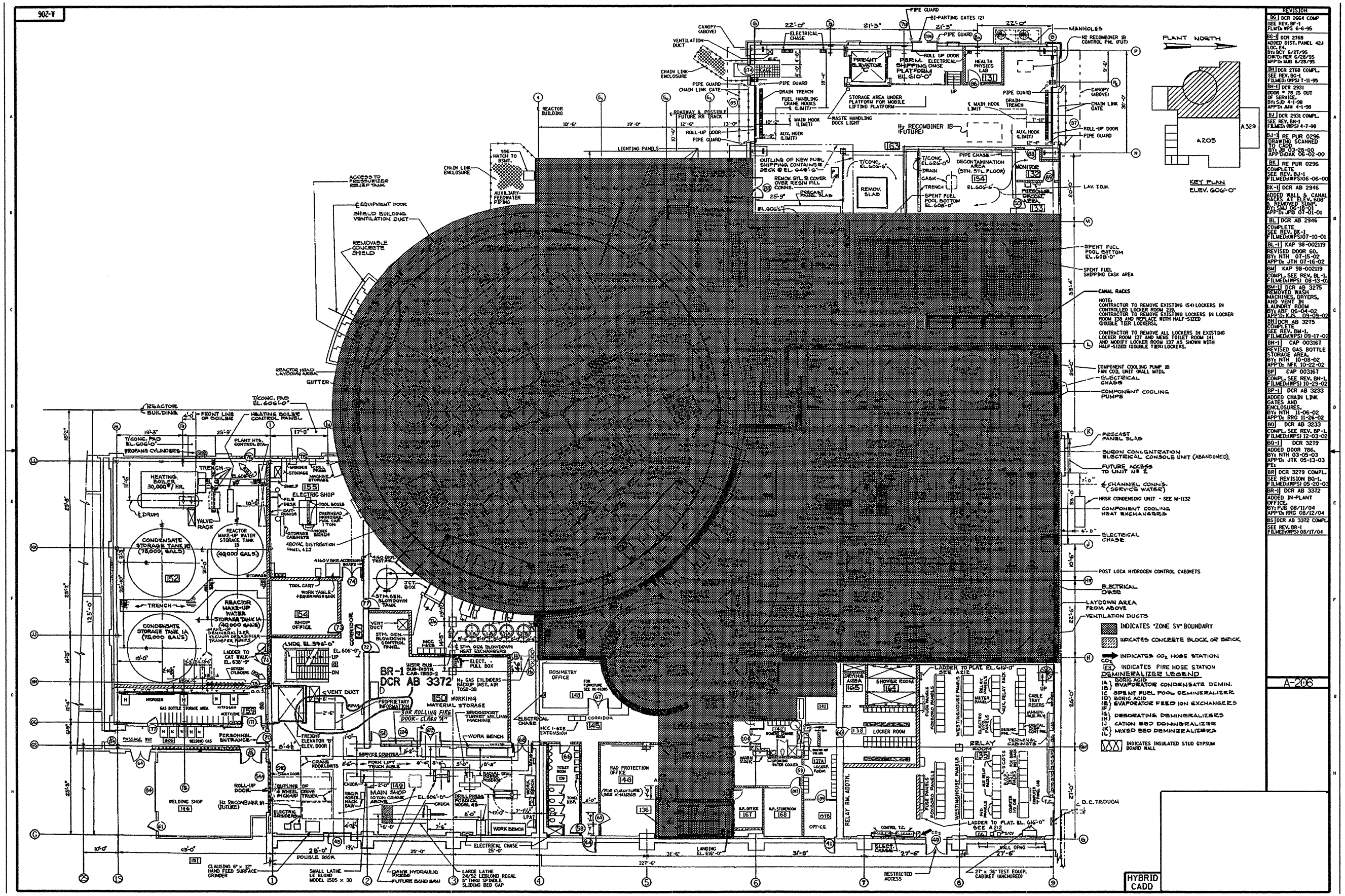

Figure 11.2-3 Radiation Control Area - Operating Floor

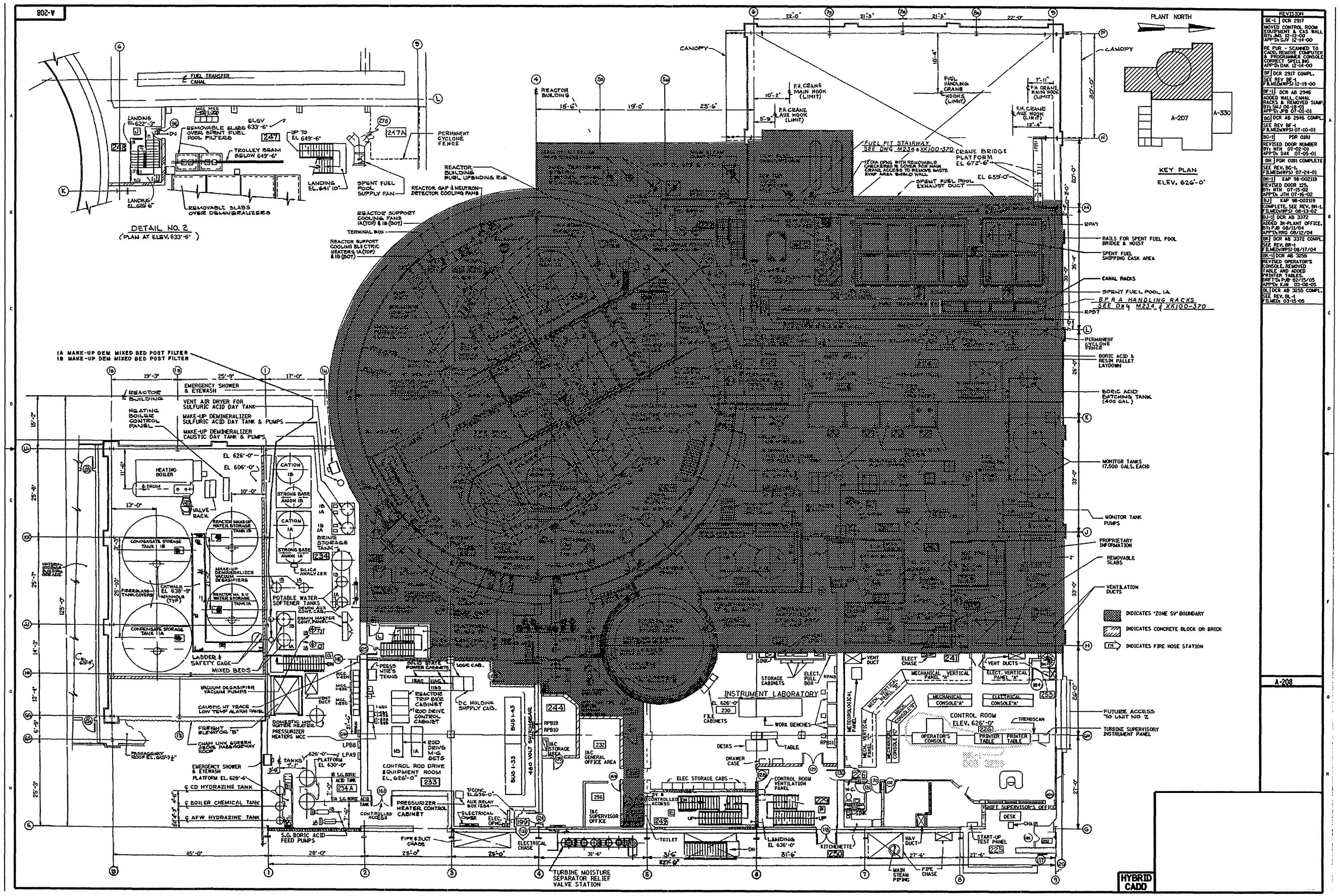

Figure 11.2-4 Radiation Control Area - Miscellaneous Floor

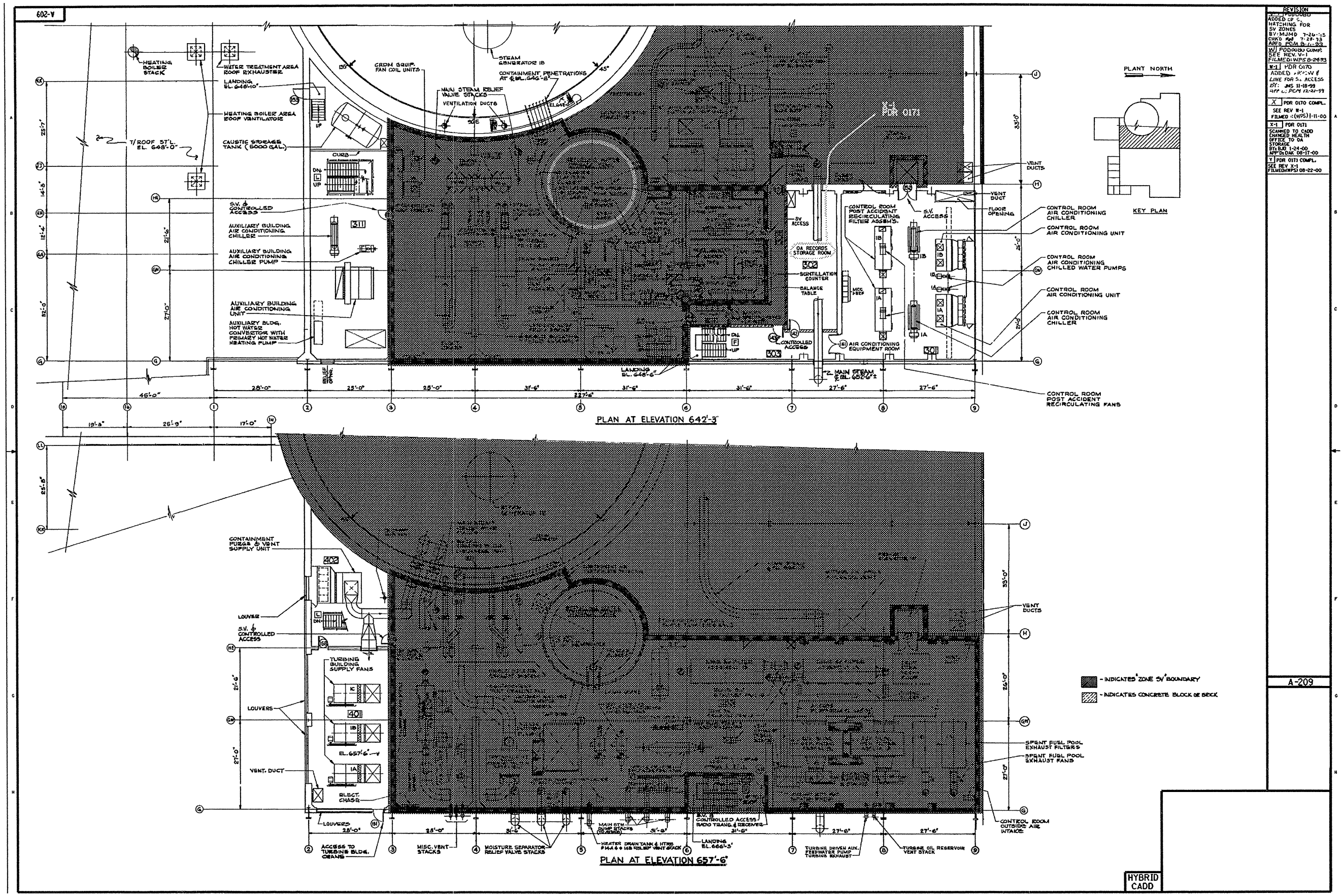

Figure 11.2-5 Maximum Radiation Levels Surrounding RHR Pipe

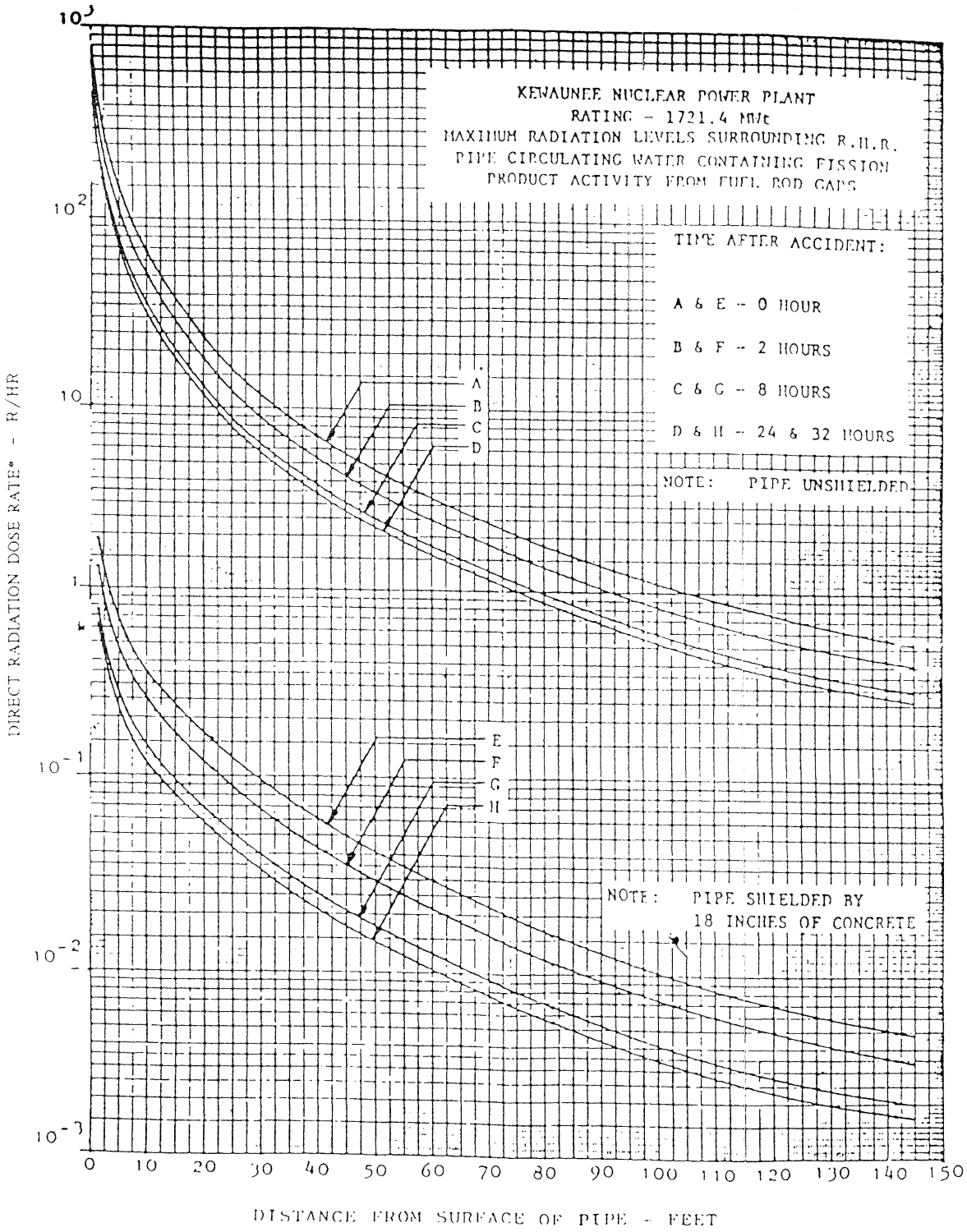

*Dose rates are external whole body.

Figure 11.2-6 Sensitivity of Dose to Activity in the RHR Water

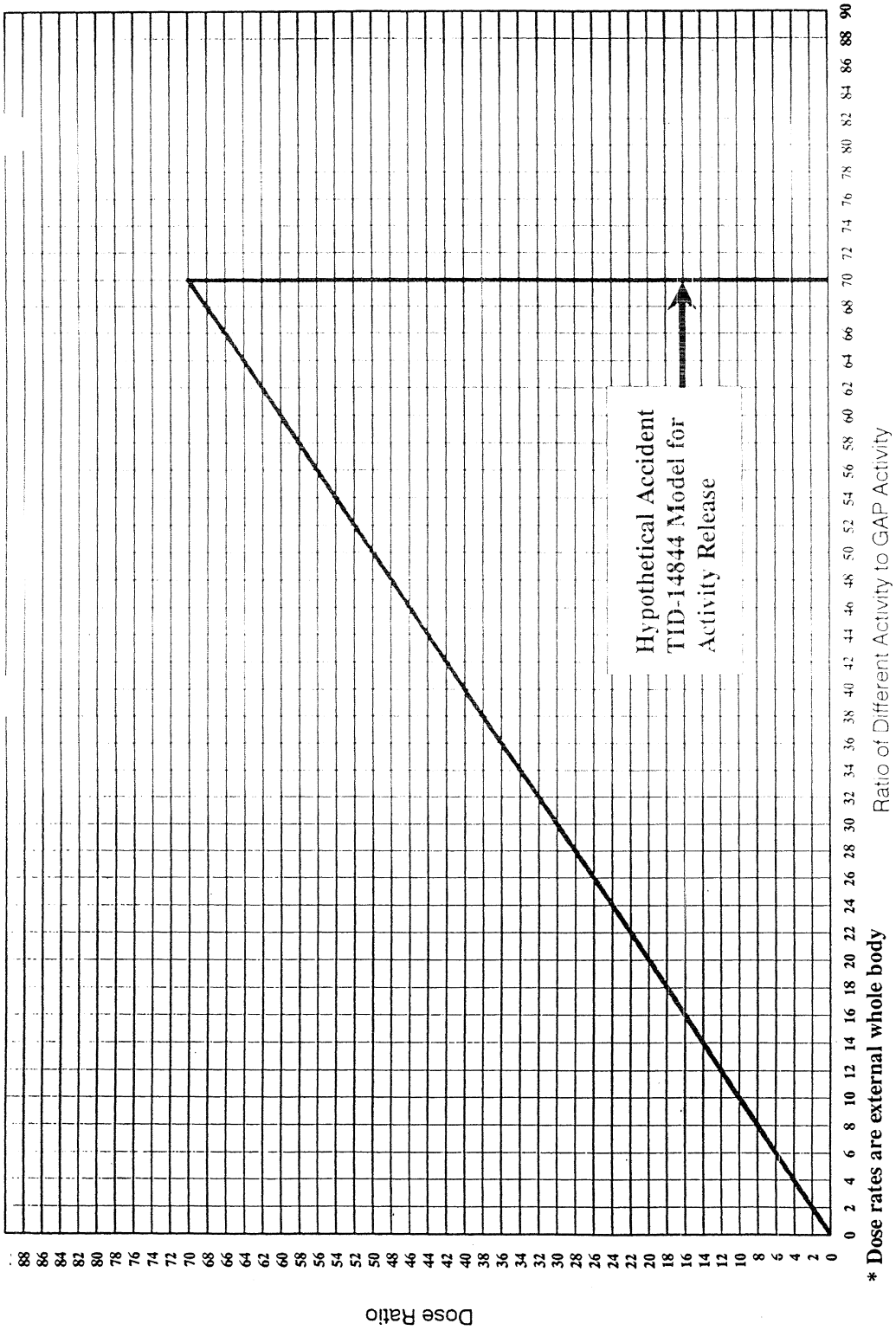

11.3 RADIOACTIVE MATERIALS SAFETY

11.3.1 Materials Safety Program

All sealed and unsealed special nuclear and by-product materials are stored within a Radiologically Controlled Area, inside the Restricted Area. A formal industrial security program has been established to protect the Restricted Area. Provisions for controlling access to the Radiologically Controlled Area are described in Section 11.2.3.

11.3.1.1 Sources

All large, greater than 0.01 ci, calibration sources are stored in the calibration room when not being used. Individual source containers for sources of significant dose rates, greater than 100-mr/hr contact, have locks, with keys controlled by the Radiation Protection staff. Liquid radioactive sources are stored in steel cabinets located in the count room or radiochemistry lab. These cabinets are maintained locked with keys controlled by the Radiation Protection staff. Use of liquid sources requires detailed inventory control, each use is recorded and an accountability record maintained. Similar controls are employed for solid sources with the maintaining of a continuous detailed inventory and accountability records. An inventory of all sources is performed quarterly; sealed sources are leak tested at six-month intervals.

11.3.1.2 Fuel

Fuel accountability, receipt, and shipment are conducted in accordance with written procedures.

If fuel shipment is made off site, documentation will be prepared and retained by the Reactor Supervisor. This documentation will describe the proposed fuel shipment, explaining which components are to be shipped, in which containers, the present status of the components, the approximate date and order of shipment, the common carrier, and the receiver.

The fuel accountability procedure defines the methods used for accountability of fuel assemblies and neutron source assemblies. It also defines the methods used for preparing and maintaining reports concerning Special Nuclear Material in accordance with 10 CFR 70.

The fuel accountability system is designed to meet the following criteria:

1. Locations of all core components are known at all times.
2. It is possible to assemble a chronological history of each core component's movements on site and change in isotopic concentrations due to burnup by core position.

The fuel storage area is normally locked except during periods of activity within the area.

11.3.1.3 Incore Detectors

The Kewaunee Plant employs moveable incore fission detectors to determine core peaking factors and to calibrate the excore power range neutron detector. Each of these detectors consists of approximately 5 mg of U^{235} at an enrichment of 93 percent. In normal operation, the lifetime of these detectors is on the order of one year. Prior to use, the detector assemblies are stored in a controlled warehouse within the Restricted Area. Failed detectors are treated as solid waste. Records of spare and operating inventory are maintained, as well as records of disposal methods for failed detectors.

11.3.2 Facilities and Equipment

Facilities available to perform leak tests of sources and retain leaking sources include the radiochemistry laboratory, counting room, and the decontamination facility. The radiochemistry laboratory is equipped with two ventilation hood assemblies with HEPA filters. The decontamination facility contains a single ventilation hood with a HEPA filter. The counting room contains instrumentation capable of detecting leakage from sealed sources. The counting room instrumentation includes gas-flow proportional counters, gamma spectroscopic analysis equipment, and survey instruments. The installed radiation monitoring equipment is described in Section 11.2.3.

11.3.3 Personnel and Procedures

Descriptions of the experience and qualifications of the key personnel responsible for handling and monitoring radioactive materials are contained in Chapter 12.

A detailed program of radiation protection has been established to control activities associated with radioactive materials.

Radiation areas inside the Radiologically Controlled Area are posted in accordance with the requirements of 10 CFR 20. All entries into the Radiologically Controlled Area require radiation work permits.

In addition to the Radiation Monitoring System described in Section 11.2.3, routine radiation and contamination surveys are conducted using portable and counting room radiation monitoring equipment to continually monitor areas of the plant. In addition, specific surveys are made on request, to evaluate and determine safe working conditions for personnel on specific jobs. Written procedures for conducting radiation and contamination surveys have been established.

All personnel, other than escorted visitors, who have occasion to enter the Radiologically Controlled Area, are indoctrinated in radiological safety. All personnel entering the Radiologically Controlled Area that have not been indoctrinated in radiological safety must obtain permission from the Radiation Protection staff and be assigned an escort.

Personnel exposure is determined using thermoluminescent devices and dosimeters. Exposure limits are established to conform with the requirements of 10 CFR 20. Protective clothing and equipment are available to minimize personnel exposure to contamination. Personnel decontamination procedures have been established and implemented.

Intentionally Blank