Chapter 5: Containment System

Table of Contents

Section	Title	Page
5.1	CONTAINMENT SYSTEM CONCEPT	5.1-1
5.1.1	Containment Systems	5.1-1
5.1.1.1	Containment Structures	5.1-2
5.1.2	Design Bases	5.1-2
5.1.2.1	Postulated Accident Conditions	5.1-2
5.1.2.2	Energy and Material Release	5.1-3
5.1.2.3	Contribution of Engineered Safety Features Systems	5.1-3
5.2	CONTAINMENT SYSTEM STRUCTURE DESIGN	5.2-1
5.2.1	Reactor Containment Vessel Design	5.2-1
5.2.1.1	Design Conditions	5.2-1
5.2.1.2	Design Leakage Rate	5.2-2
5.2.1.3	Design Loadings	5.2-2
5.2.1.4	Design Basis Accident Loads	5.2-2
5.2.1.5	Codes	5.2-6
5.2.1.6	In-Service Inspection	5.2-8
5.2.1.7	Design Stress Criteria	5.2-9
5.2.1.8	Reactor Containment Vessel at Embedment Region	5.2-12
5.2.1.9	Concrete and Steel Interface Design	5.2-13
5.2.1.10	Non-Axisymmetric Loading Due to Concrete Shielding at Fuel Transfer Tube	5.2-14
5.2.1.11	Testing of the Reactor Containment Vessel on Temporary Supports	5.2-17
5.2.1.12	Wind Analysis	5.2-17
5.2.1.13	Seismic Analysis	5.2-17
5.2.1.14	Building Response Spectra	5.2-18
5.2.1.15	Floor Response Acceleration	5.2-18
5.2.1.16	Airlock Seismic Analysis	5.2-18
5.2.1.17	Dynamic Constants for Airlocks	5.2-18
5.2.1.18	Seismic Forces on Airlocks	5.2-20
5.2.1.19	Seismic Stresses	5.2-20
5.2.1.20	Vertical Earthquake	5.2-21
5.2.1.21	Soil - Structure Interaction	5.2-21
5.2.1.22	Foundation Damping Factor	5.2-21
5.2.1.23	Penetrations	5.2-22
5.2.1.24	Piping Penetrations	5.2-24

Chapter 5: Containment System

Table of Contents

Section	Title	Page
5.2.1.25	General Design Description	5.2-24
5.2.1.26	Design Basis Common to Hot and Cold Piping Penetrations	5.2-25
5.2.1.27	Design Evaluation Common to Hot and Cold Piping Penetrations	5.2-25
5.2.1.28	Design Description - Hot Penetrations	5.2-26
5.2.1.29	Design Basis - Hot Penetrations	5.2-27
5.2.1.30	Design Evaluation - Hot Penetrations	5.2-28
5.2.1.31	Main Steam Piping Penetrations	5.2-28
5.2.1.32	Design Basis - Main Steam Piping Penetrations	5.2-28
5.2.1.33	Equipment and Personnel Access	5.2-29
5.2.1.34	Fuel Transfer Penetration	5.2-29
5.2.1.35	Containment Supply and Exhaust Purge Duct Penetrations	5.2-29
5.2.1.36	Missile Protection Features	5.2-30
5.2.2	Shield Building Design	5.2-32
5.2.2.1	Design Conditions	5.2-32
5.2.2.2	Design Leakage Rate	5.2-33
5.2.2.3	Design Loadings	5.2-33
5.2.2.4	Concrete Cracks in Walls of Shield Building During Post-Earthquake Conditions	5.2-40
5.2.2.5	Analysis and Design for Missiles	5.2-42
5.2.2.6	Penetrations	5.2-45
5.3	REACTOR CONTAINMENT VESSEL ISOLATION SYSTEMS	5.3-1
5.3.1	Design Bases	5.3-1
5.3.1.1	Containment Isolation Valves	5.3-1
5.3.2	System Design	5.3-1
5.3.3	System Evaluation	5.3-4
5.4	CONTAINMENT VESSEL AIR HANDLING SYSTEM	5.4-1
5.4.1	Design Conditions	5.4-1
5.4.1.1	Design Basis	5.4-1
5.4.2	System Design	5.4-2
5.4.2.1	Isolation Valves	5.4-3

Chapter 5: Containment System

Table of Contents

Section	Title	Page
5.4.3	Vacuum Relief System	5.4-3
5.4.3.1	Design Basis	5.4-3
5.4.3.2	System Design	5.4-4
5.4.3.3	Testing	5.4-5
5.4.3.4	Single Failure Analysis	5.4-6
5.4.3.5	Performance Analysis	5.4-6
5.4.3.6	Discussion	5.4-6
5.5	SHIELD BUILDING VENTILATION SYSTEM	5.5-1
5.5.1	Design Conditions	5.5-1
5.5.1.1	Design Bases	5.5-2
5.5.2	System Description	5.5-3
5.5.3	Actuation and System Operation	5.5-4
5.5.4	Component Design	5.5-5
5.5.4.1	Fans	5.5-5
5.5.4.2	Filter Assemblies	5.5-5
5.5.5	System Evaluation	5.5-6
5.5.6	Reliability and Testing	5.5-7
5.5.6.1	Quality Assurance	5.5-7
5.5.6.2	System Tests	5.5-7
5.6	LEAKAGE MONITORING	5.6-1
5.7	TESTS AND INSPECTIONS	5.7-1
5.7.1	Reactor Containment Vessel	5.7-1
5.7.1.1	Pre-Operational Quality Assurance and Testing	5.7-1
5.7.1.2	Quality Assurance	5.7-1
5.7.1.3	Initial Testing	5.7-1
5.7.1.4	Leak-Tight Integrity Tests	5.7-2
5.7.2	Shield Building	5.7-3
5.7.2.1	Pre-Operational Testing and Inspection	5.7-3
5.7.2.2	Leak Tightness	5.7-3
5.7.3	Auxiliary Building Special Ventilation Zone	5.7-4
5.7.3.1	Pre-Operational Testing and Inspection	5.7-4
5.7.3.2	Leak Tightness	5.7-4

Chapter 5: Containment System

Table of Contents

Section	Title	Page
5.8	SYSTEM EVALUATION	5.8-1
5.9	INTERNAL STRUCTURES	5.9-1
5.9.1	Description	5.9-1
5.9.2	Design Basis	5.9-1
5.9.2.1	Reactor Coolant System Compartments and Refueling Cavity	5.9-3
5.9.2.2	Loads	5.9-3
5.9.2.3	Method of Analysis	5.9-4
5.9.2.4	Design	5.9-5
5.9.2.5	Design Criteria	5.9-5
5.9.2.6	Design Verification	5.9-6
5.9.2.7	Analysis Model	5.9-6
5.9.2.8	Analysis Assumptions	5.9-6
5.9.2.9	Analysis Results	5.9-7
5.9.2.10	Analysis Conclusions	5.9-8
5.9.2.11	Loads	5.9-9
5.9.2.12	Load Combinations	5.9-9
5.9.2.13	Discussion of Results of Finite Element Analysis	5.9-10
5.9.2.14	Structural Analysis of Reactor Vessel Cavity Compartment	5.9-11
5.9.2.15	Nozzle Cavity	5.9-11
5.9.2.16	Structural Supports for Primary System Components	5.9-11
5.9.2.17	Method of Analysis	5.9-12
5.9.2.18	Design	5.9-13
5.9.2.19	Design Criteria	5.9-16
5.9.2.20	Reactor Cavity Biological Shield	5.9-16
5.9.2.21	Loads	5.9-17
5.9.2.22	Method of Analysis	5.9-18
5.9.2.23	Design	5.9-18
5.9.2.24	Design Criteria	5.9-18
5.9.2.25	Floor Systems	5.9-18
5.9.2.26	Loads	5.9-18
5.9.2.27	Method of Analysis	5.9-19
5.9.2.28	Design and Design Criteria	5.9-19

Chapter 5: Containment System

Table of Contents

Section	Title	Page
5.9.2.29	Stresses in Interior Structures	5.9-19
5.9.3	Materials	5.9-20
5.9.3.1	Concrete	5.9-21
5.9.3.2	Reinforcement	5.9-21
5.9.3.3	Structural Steel	5.9-21
5.9.4	Construction	5.9-23
5.9.4.1	Concrete in Ellipsoidal Bottom	5.9-23
5.9.4.2	Reactor Cavity Structure	5.9-23
5.9.4.3	Steam Generator and Reactor Coolant Pump Vaults	5.9-23
5.9.4.4	Reactor Refueling Cavity	5.9-23
5.9.4.5	Work Areas	5.9-24

Chapter 5: Containment System

List of Tables

Table	Title	Page
5.2-1	Allowable Stress Criteria - Reactor Containment Vessel Material: ASTM A516 Grade-70	5.2-47
5.2-2	D.G. O'Brien Electrical Penetration Tests	5.2-48
5.2-3	Reactor Containment Vessel Penetrations	5.2-49
5.2-4	Zone SV Boundary Penetrations Removable Slabs and Steel Plate Covers	5.2-61
5.2-5	Zone SV Boundary Penetrations Doors	5.2-62
5.2-6	Zone SV Boundary Penetrations & Zone SV Boundary Dampers	5.2-63
5.2-7	Shield Building Leakage Rates	5.2-65
5.2-8	Allowable Stresses - Shield Building	5.2-66
5.2-9	Allowable Stress Criteria - Shield Building	5.2-67
5.2-10	Membrane and Surface Stresses	5.2-68
5.2-11	Stresses Due to Temperature Difference	5.2-69
5.2-12	Stresses Due to Pressure Difference	5.2-69
5.2-13	Summary of Stresses Without Cold Spot	5.2-69
5.2-14	Maximum Stresses in the Containment Shell at the External Embedment Line	5.2-70
5.2-15	Steel and Concrete Stresses in Containment Vessel Bottom at Mezzanine Floor Line	5.2-71
5.2-16	Combined Stresses	5.2-72
5.2-17	Assumptions and Results of Calculation of Wall Temperatures and Total Stresses	5.2-74
5.2-18	Hot Penetration Guard Pipes Allowable Stress	5.2-75
5.4-1	Containment and Annulus Pressure Transients at Normal Operations Conditions (Subject to a Simultaneous Operation of all Cooling Units with One Vacuum Relief System)	5.4-8
5.4-2	Containment and Annulus Temperature Histories at Normal Operating Conditions (Subject to a Simultaneous Operation of All Internal Cooling Units With One Vacuum Relief System)	5.4-9
5.4-3	Vacuum Relief Valve Components	5.4-10
5.9-1	Allowable Stresses - Internal Structures	5.9-26
5.9-2	Design Stress Limits For Reactor Coolant System Compartments and Refueling Cavity	5.9-27
5.9-3	Loads and Load Combinations for Finite Element Analysis	5.9-29
5.9-4	Steam Generator Vault Maximum Stress and Stress Limits	5.9-30
5.9-5	Reactor Vessel Cavity Maximum Stress And Stress Limits	5.9-32
5.9-6	Nozzle Cavity Maximum Stress and Stress Limits	5.9-33

Chapter 5: Containment System

List of Tables

Table	Title	Page
5.9-7	Design Stress Limits for Structural Equipment Supports	5.9-34
5.9-8	Design Stress Limits for Biological Shield Structures	5.9-35
5.9-9	Allowable and Critical Stresses in Reactor Building Interior Structures	5.9-37

Chapter 5: Containment System

List of Figures

Figure	Title	Page
5.1-1	Containment System	5.1-5
5.2-1	Shell Transition Zone and Internal Stiffeners	5.2-76
5.2-2	Section of Base Slab & Wall Reinf. Details	5.2-77
5.2-3	Plan of Base Slab Reinf. Details	5.2-77
5.2-4	Section of Dome Slab & Wall Reinf. Details	5.2-78
5.2-5	Plan of Dome Slab & Wall Reinf. Details	5.2-79
5.2-6	Large Opening in Wall Typical Arrangement of Reinforcement	5.2-80
5.2-7	Temporary Support Structure	5.2-81
5.2-8	Electrical Penetration Assembly	5.2-83
5.2-9	Cold Piping Penetrations Assembly	5.2-85
5.2-10	Residual Heat Removal Piping Penetrations Assembly	5.2-86
5.2-11	Steam Generator Blowdown and Letdown Line Piping Penetrations Assembly	5.2-87
5.2-12	Containment System Calculated Displacements Due to Earthquake, Pressure and Temperature	5.2-89
5.2-13	Main Steam and Feedwater Piping Penetrations Assembly	5.2-90
5.2-14	Shield Building Leakage Rate	5.2-91
5.3-1	Special Containment Isolation System - Ventilation Purge and Supply	5.3-5
5.4-1	Containment Vessel Air Handling System Flow Diagram	5.4-11
5.4-2	Vacuum Relief System Typical Assembly	5.4-13
5.4-3	Containment and Annulus Pressure Transients*	5.4-14
5.4-4	Differential Pressure Across Containment Vessel*	5.4-15
5.9-1	Steam Generator Vault Compartment Differential Pressure Analysis	5.9-39
5.9-2	Volume and Flow Path Schematic of Reactor Cavity Region	5.9-39
5.9-3	Plan View and Section of Wall Segment Showing Stirrup	5.9-40
5.9-4	Plan View or Structural Model of Steam Generator Compartment (Height 68 Ft.)	5.9-41
5.9-5	Steam Generator and Reactor Cavity Compartment Configuration - Section	5.9-42
5.9-6	Stress Output for Three-Dimensional Brick Element in Local Coordinate System	5.9-43
5.9-7	Reactor Vessel Supports	5.9-44
5.9-8	Steam Generator Supports	5.9-45
5.9-9	Primary Coolant Loop Piping Restraints	5.9-47
5.9-10	Pressurizer Support	5.9-49
5.9-11	Reactor Coolant Pump Supports	5.9-50

Chapter 5: Containment System

List of Figures

Figure	Title	Page
5.9-12	Concrete Beam Floor Typ. Arrangement of Reinf.	5.9-51
5.9-13	Enclosure Walls for Steam Generator & R.C. Pump Typ. Plan of Reinforcement	5.9-52

Intentionally Blank

CHAPTER 5
CONTAINMENT SYSTEM

5.1 CONTAINMENT SYSTEM CONCEPT

5.1.1 Containment Systems

The total containment consists of two systems as shown in Figure 5.1-1:

1. The Primary Containment System consists of a steel structure and its associated-engineered safety features (ESF) Systems. The Primary Containment System, also referred to as the Reactor Containment Vessel, is a low-leakage steel shell, including all its penetrations, designed to confine the radioactive materials that could be released by accidental loss of integrity of the Reactor Coolant System pressure boundary. Systems directly associated with the Primary Containment System include the Containment Vessel Internal Spray, Containment Air Cooling and Containment Isolation Systems.

   The principal post-accident function of the Containment Spray and the Air Cooling System is to reduce the pressure (and temperature) in the Reactor Containment Vessel.

   The principal function of the Containment Isolation System is to confine the fission products within the Primary Containment System boundary.

2. The Secondary Containment System consists of the Shield Building, its associated ESF Systems, and a Special Ventilation Zone in the Auxiliary Building. The Shield Building is a medium-leakage concrete structure surrounding the Reactor Containment Vessel and designed to provide:

- Biological shielding for Design Basis Accident (DBA) conditions.
- Biological shielding for parts of the Reactor Coolant System (RCS) during operation.
- Protection of the Reactor Containment Vessel from low temperatures, adverse atmospheric conditions, external missiles.
- A means for collection and filtration of fission-product leakage from the Reactor Containment Vessel following the Design Basis Accident. The Shield Building Ventilation System is the ESF utilized for this function.

The Special Ventilation Zone of the Auxiliary Building provides a medium-leakage boundary, which confine leakage that could conceivably by-pass the Shield Building annulus.

The safety system associated with the Auxiliary Building Special Ventilation Zone is the Auxiliary Building Special Ventilation System (ABSVS). The principal function of the ABSVS is to confine and filter any potential fission products that may by-pass the Shield Building annulus.

The process flow diagrams have been marked to indicate both the Primary and Secondary Containment boundaries.

5.1.1.1 Containment Structures

The Containment System consists of two separate structures: a Reactor Containment Vessel and a Shield Building.

The Reactor Containment Vessel is a cylindrical steel pressure vessel with hemispherical dome and ellipsoidal bottom which houses the reactor pressure vessel, the steam generators, reactor coolant pumps, the reactor coolant loops, the accumulators of the Safety Injection System, the reactor coolant pressurizer, the pressurizer relief tank and other branch connections of the Reactor Coolant System.

The Reactor Containment Vessel is completely enclosed by the Shield Building. The Shield Building has the shape of a right circular cylinder with a shallow dome roof. A 5-ft. annular space is provided between the Reactor Containment Vessel and the Shield Building. Clearance at the roof of the Shield Building is 7 feet.

The Reactor Containment Vessel is supported on a grout base that was placed after the Vessel construction was completed and tested. Both the Reactor Containment Vessel and the Shield Building are supported on a common foundation slab. Appendix A contains a report on the foundation conditions.

Freedom of movement between the Reactor Containment Vessel and the Shield Building is virtually unlimited. With the exception of the support grout placed underneath and near the knuckle sides of the Vessel, there are no structural ties between the Reactor Containment Vessel and the Shield Building above the foundation slab.

5.1.2 Design Bases

5.1.2.1 Postulated Accident Conditions

The Containment System is designed to provide protection for the public from the consequences of a Design Basis Accident as defined in Chapter 14. The accident is a design condition based on an instantaneous double-ended rupture of the cold leg of the Reactor Coolant System. Pressure and temperature behavior subsequent to the accident was determined by calculations evaluating the combined influence of the energy sources, the heat sinks and ESFs. These are discussed in detail in Chapter 14.

5.1.2.2 Energy and Material Release

The sources available for the release of energy and materials into the Containment System are:

- Stored heat in the reactor core and internal structures;
- Decay heat from the reactor core;
- Stored heat in the materials of the RCS;
- Metal-water reactions;
- Hydrogen combustion;
- Reactor coolant and its contained corrosion and fission products;
- Fission products in the fuel elements of the core.

The amount of energy released by each of these sources during the assumed accident is discussed in Section 14.3.4, along with their post-accident time-related influence on the Containment. Energy contribution from the secondary steam system was not included in the calculation of Reactor Containment Vessel maximum internal pressure.

5.1.2.3 Contribution of Engineered Safety Features Systems

Since the design, application and evaluation of the ESF Systems are discussed fully in Chapter 6, their relation to the Containment Systems design is only summarized in this section.

Engineered Safety Features Systems are provided to minimize the consequences of the assumed accident by:

- Removing heat from the fuel,
- Inserting negative reactivity into the reactor,
- Decreasing the pressure of the Reactor Containment Vessel by removing thermal energy, and
- Removing radioactive material from the leakage through penetrations in the Reactor Containment Vessel.

The principal ESF Systems are:

- Safety Injection System
- Residual Heat Removal System
- Containment Vessel Internal Spray System
- Containment Vessel Air Handling System
- Shield Building Ventilation System
- Auxiliary Building Special Ventilation System

Figure 5.1-1 Containment System

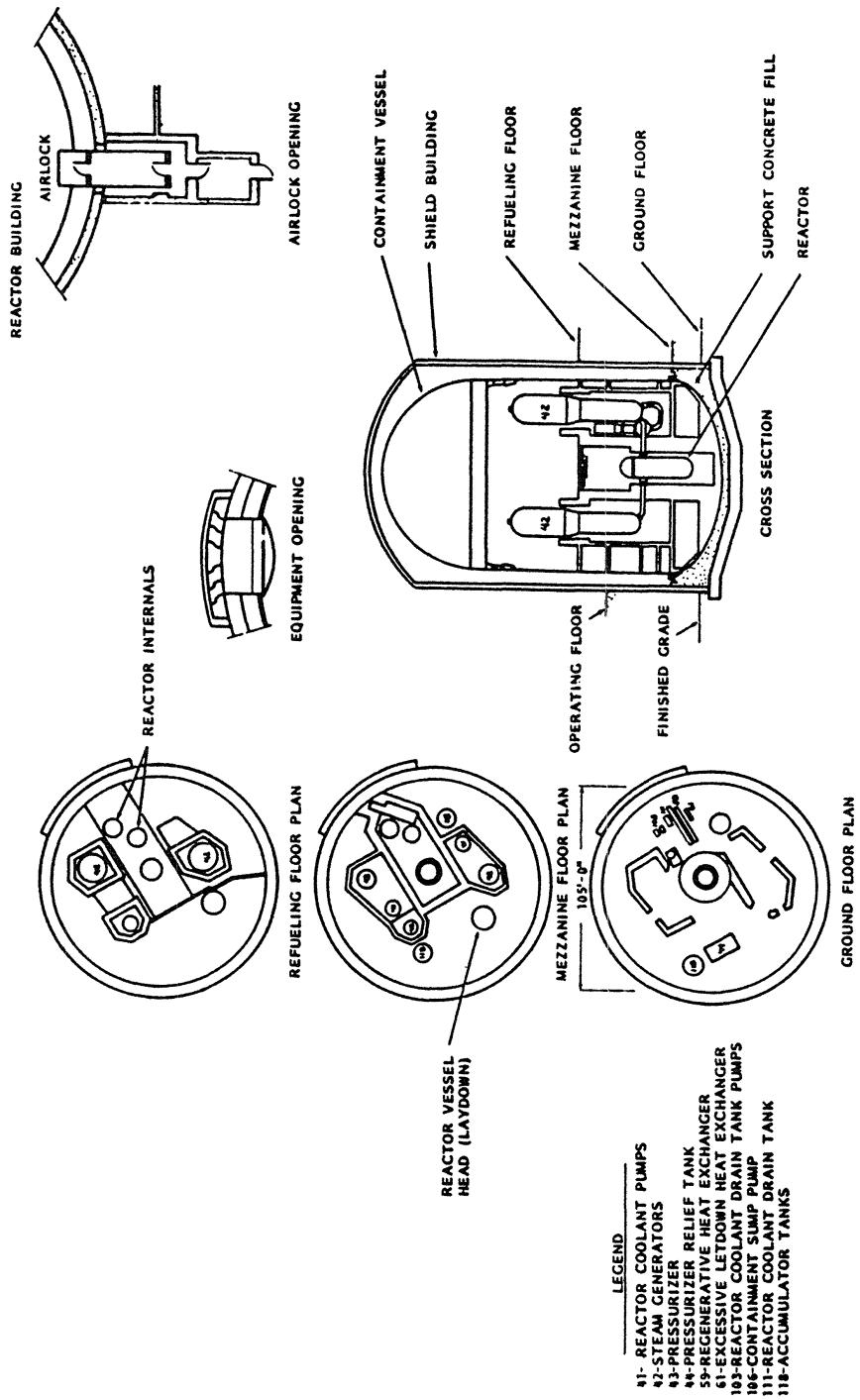

Intentionally Blank

5.2 CONTAINMENT SYSTEM STRUCTURE DESIGN

5.2.1 Reactor Containment Vessel Design

5.2.1.1 Design Conditions

The Reactor Containment Vessel is designed for a maximum internal pressure of 46 psig and a temperature of 268°F. The Reactor Containment Vessel design internal pressure as defined by ASME Boiler and Pressure Vessel Code is 41.4 psig.

The design temperature of 268°F is specifically for the design of the reactor containment vessel shell. Heat transfer to the containment vessel and to containment systems, structures and components, under the conditions of condensation of steam, is a function of the saturation temperature of the steam at its partial pressure in the steam/air mixture. The design temperature of 268°F is therefore based on the maximum saturation temperature of steam at the partial pressure of steam in the containment steam/air mixture following a design basis accident (DBA).

The vessel is 105 ft. inside diameter, 206 ft. high, and contains an internal net free volume of 1,320,000 ft^3.

The vessel plate nominal thickness does not exceed 1½ inches at the field welded joints so the vessel, as an integral structure, did not require field stress relieving. The hemispherical dome is ¾" thick and the ellipsoidal bottom is 1½" thick. A polar crane of 230 tons capacity is mounted on a girder attached to the vessel wall. Reinforcing plates at penetration openings exceed 1½" in thickness; however, these were fabricated as penetration weldment assemblies and were stress-relieved before they were welded to adjacent vessel shell plates.

The following loadings were considered in the design of the Reactor Containment Vessel, in addition to the pressure and temperature conditions described above:

- Dead Loads
- Design Basis Accident Loads
- Operating Loads
- External Pressure Loads
- Seismic Loads
- Foundation Deformation Loads
- Internal Test Pressure
- Thermal Stresses (in steel shell due to temperature gradients)
- Pipe Reaction and Rupture Forces

5.2.1.2 Design Leakage Rate

The Reactor Containment Vessel, including penetrations, is designed for low leakage. At the completion of erection, the Reactor Containment Vessel was tested with the penetrations capped. The measured leakage rate was 0.02 percent of the Reactor Containment Vessel's net free volume at a nominal internal pressure of 46 psig. The Reactor Containment Vessel was re-tested with all penetrations installed to assure that the leakage requirements as set forth in the analysis of Chapter 14, have been met. Testing is described in Section 5.7.

5.2.1.3 Design Loadings

5.2.1.3.1 Dead Loads

Dead loads consist of the dead weight of the Reactor Containment Vessel and its appurtenances, the weight of internal concrete, and the weight of structural steel and miscellaneous building items within the Reactor Containment Vessel.

Weights used for dead load calculations are as follows:

- Concrete: 143 PCF
- Steel Reinforcing: 489 PCF using nominal cross-section areas reinforcing bar sizes as defined in ASTM A 615
- Steel Containment Vessel: 489 PCF

5.2.1.4 Design Basis Accident Loads

This load was determined by analysis of the transient pressure and temperature effects that could occur during the DBA (see Chapter 14).

5.2.1.4.1 Operating Loads

Operating loads include the following:

- Gravity loads from all equipment and piping,
- Weight of water in the refueling cavity,
- Weight of crane,
- Loads resulting from the restraint of the free movement of the vessel at the line of embedment in concrete,
- Piping reactions at nozzles resulting from thermal movement.

The analysis of piping reaction forces acting on the steel shell penetration nozzles is based on the algebraic summation of the loading and movements derived from the analysis of the containment vessel, interior and exterior structures, and the attached piping systems.

This analysis included:

1. Piping systems under dead load, live load, thermal, and seismic conditions.
2. Containment vessel and interior and exterior structures under dead load, live load, thermal and seismic conditions.

The analysis considered the interactions between the exterior and interior structures and the containment vessel and included any reversal of penetration reaction forces that could occur.

Major piping systems are not anchored to the containment shell, but are allowed to move freely through the shell penetration. Indirect piping loads on the penetration bellows that are used to seal these systems at the containment boundary have been included in the containment vessel penetration analysis and design.

Piping systems that are directly attached to the containment shell (without expansion bellows) are of small pipe sizes and are of such geometry and design as to be flexible systems imposing minimal loads on the containment shell.

The moment, shear, and radial thrust structural capabilities of all the vessel shell penetrations have been analyzed by the Chicago Bridge and Iron Co. and have been provided and documented in the Containment Vessel Stress Report on file at the site.

The appropriate combinations of loads, moments, shears, and radial thrusts have been applied to the vessel penetrations in conjunction with the operating load parameters of the piping system analysis. The resulting stresses were found to be within suitable margins of the specified design criteria so as to preclude any damage to the steel shell or any anchorage system.

Equipment loads used were those specified on the drawings supplied by the manufacturers of the various pieces of equipment. Floor loadings for the design of internal slabs are consistent with their intended use.

5.2.1.4.2 External Pressure Load

During normal operation, annulus pressure will be essentially ambient barometric pressure. The Reactor Containment Vessel's shell plates are of suitable thickness to meet the specified internal pressure requirements and are capable of withstanding an external pressure differential of 0.8 psi in accordance with Section VIII of the ASME Boiler and Pressure Vessel Code.

Automatic vacuum relief devices are used to prevent the Reactor Containment Vessel from exceeding the external design pressure in accordance with the requirements of the ASME Boiler and Pressure Vessel Code, Section III, Article 17.

During and following the DBA, the annulus pressure will not exceed 1-inch water column positive or 5-inches water column negative. These values include results of analysis examining the effects of a single failure in the Shield Building Ventilation System.

Two valves in series are used in each of two lines to the annulus. One valve is actuated by a differential pressure signal and is independent of electrical power. The second valve is self-actuating. The vacuum breaker system is sized to provide air flow into the Reactor Containment Vessel at a rate to meet the following conditions, assumed to occur simultaneously without exceeding the maximum internal pressure differential (vacuum) of 0.8 psi below the external pressure:

1. Atmospheric pressure increasing at a rate equivalent to the maximum recorded by the nearest weather station,
2. Internal air being cooled at the maximum rate expected with all four fan-coil units and both internal spray units operating, with cooling water temperatures of 55°F for spray units and 32°F for fan-coil units;
3. No heat energy entering the containment atmosphere.

The vacuum breaker system has sufficient capability to meet single-failure design criteria, and is capable of proper functioning during a Design Basis Earthquake (DBE).

5.2.1.4.3 Seismic Loads

Seismic loads were computed using the following:

1. Operational Basis Earthquake (OBE) seismic ground acceleration of 0.06g horizontal; (see Appendix A)
2. DBE seismic ground acceleration of 0.12g horizontal.

A vertical component of 2/3 of the horizontal ground acceleration is applied simultaneously with the horizontal acceleration.

The Reactor Containment Vessel earthquake design included the seismic effects of the inertial mass of the air locks and equipment hatch, and the seismic effects of the air locks vibrating as an independent system. The independent vibration effects are considered to act in two directions:

1. Along the longitudinal axis of the air lock
2. In the rotational direction about the point of support on the vessel shell.

The seismic effects of the inertial mass of the crane is included in the Reactor Containment Vessel earthquake design.

The plots of the seismic response spectra are shown in Appendix A. The classification of plant structures and equipment and the applicable damping factors are shown in Appendix B.

5.2.1.4.4 Foundation Deformation Loads

During grouting, while the Vessel was supported on temporary columns, deformations of the base slab due to the weight of grout were not imposed on the Reactor Containment Vessel. Deformations of the base slab at this time were accommodated by the manner in which the grout was placed.

The bottom internal deck structure that was fitted to the inside contour of the vessel bottom, the grout base that confines the outside of the vessel bottom, and the heavily reinforced slab foundation mat formed a stiff integral structural system capable of transmitting all internal building loads directly into the supporting soil without relative deformation of the system.

5.2.1.4.5 Internal Test Pressure

The vessel was designed to be internally pressure tested on temporary supports. The vessel can also be tested to 46 psig at any time during its service life with the reactor shutdown. Prior to reactor operation the vessel was tested at an over-pressure of 51.8 psig.

5.2.1.4.6 Pipe Reaction and Rupture Forces

Pipe ruptures were postulated in the high pressure portions of all piping systems and the resulting jet forces considered in the design of the containment vessel and vessel penetrations.

In the design of the vessel shell, consideration was given to potential hazards from jet impingement resulting from ruptures of adjacent piping. The force of the jet impinging upon the vessel was computed as a function of distance from the hypothetical rupture. All high pressure piping within containment was examined to assure that the selected routings imposed no potential hazard.

The combination of loading which are to include pipe rupture forces (faulted condition), and the associated stress limits, are given in Appendix B. The load combinations to be considered are given in Table B.7-5 and the associated stress limits given for pressure vessels in Table B.7-2.

5.2.1.4.7 Thermal Stresses in Steel Shell Due to Temperature Gradients

The steel shell in the knuckle region was designed for the combined pressure and temperature gradients present.

5.2.1.5 Codes

5.2.1.5.1 Design Codes

The design, fabrication, inspection, and testing of the Reactor Containment Vessel comply with the requirements of the ASME Boiler and Pressure Vessel Code, Section II, Materials; Section III, Nuclear Vessels, Subsection B, Requirements for Class B Vessels, and applicable paragraphs of Appendix IX, Nondestructive Examination Methods; Section VIII, Unfired Pressure Vessels; and Section IX, Welding Qualifications.

The Reactor Containment Vessel design and construction meet all the requirements of state and local building codes.

5.2.1.5.2 Vessel Classification

The Reactor Containment Vessel is a Class B vessel as defined in the ASME Boiler and Pressure Vessel Code, Section III, Nuclear Vessels N-132.

5.2.1.5.3 Code Stamp

The Reactor Containment Vessel is code-stamped for pressures of both 46 psig and 41.4 psig in accordance with Paragraph N-1500, ASME Boiler and Pressure Vessel Code, Section III.

5.2.1.5.4 Materials

The Reactor Containment Vessel is fabricated of SA 516 Grade 70 steel plate meeting SA 300 requirements except that impact test requirements are as specified in the ASME Boiler and Pressure Vessel Code, Section III, N-1211 (a) for a minimum service metal temperature of 30°F.

Charpy V-Notch specimens (ASTM A 370 Type A) used for impact testing materials of all product forms were in accordance with the requirements of the ASME Boiler and Pressure Vessel Code, Section III, N-330. All material except austenitic stainless steels or non-ferrous metal associated with the Reactor Containment Vessel have an nil ductility temperature (NDT) of at least 0°F or less when tested in accordance with the appropriate code for the material.

The containment vessel has been specified to have Charpy V-notch temperature requirements not higher than 0°F. Charpy V-notch test data which demonstrate that the nil-ductility transition temperature is at least as low as 0°F are to be found in a voluminous record of impact test data on file at the site.

The Shield Building, as described in Chapter 5, protects the entire containment vessel from direct exposure to the outside atmosphere. An analysis of temperature gradients across the shell itself, the bulk air within the annulus, and the Shield Building (assuming an outside temperature of -20°F) shows that an internal containment air temperature of 38°F results in a shell temperature

of 30°F. Containment air temperature of 38°F or less is not considered credible for the following reasons:

1. Containment air temperatures are periodically monitored to verify proper operation of the containment air cooling system and, if necessary, manual action can be taken to prevent overcooling.
2. The heat load from internal equipment within containment is approximately 4E+6 Btu/hr, while the heat loss to the surroundings at -20°F is 4.7E+5 Btu/hr. This suggests that the containment air could be heated at a rate of 3.8°F/min if the fan coil units are not removing heat. Thus the operating equipment provides an excellent heat source for assuring an adequate operating temperature of the containment vessel shell.
3. The containment purge and ventilation system heaters are designed to supply 75°F air at a rate of 33,000 CFM. The equivalent net heat input of this system is 1.3E+6 Btu/hr with respect to the lowest permissible containment air temperature 38°F. Since this heat input is almost a factor of 3 higher than the heat loss of 4.7E+5 Btu/hr, the containment purge system heaters are capable of maintaining containment air temperature above 38°F when the reactor is shutdown, even if the fan coil units are in operation.
4. Normal maximum and minimum daily temperatures at Kewaunee are about 20°F and 0°F in January. Therefore, the assumption of constant outside temperature at -20°F is conservative, in spite of a few hours of extreme minimum at -40°F being recorded in January.

In the event of a LOCA, the initial containment ambient air temperature will exceed 40°F, as specified under the requirements for the containment system.

For any break, which released the stored energy of the reactor coolant, the air temperatures in the containment and in the annulus will remain above NDT considerations until long after the Shield Building Ventilation System is in the full recirculation mode.

Beyond this time, the containment air temperature can readily be maintained above 40°F by deliberately not overcooling the containment atmosphere with the post-accident heat removal systems. During eventual containment purge, the purge air heaters can be used if the outside air requires warming.

Calculations based on -20°F outside air and 32°F cooling water temperatures, heat input only from the containment, 200 cfm of annulus in-leakage, and a combined convective-radiative heat transfer coefficient of 1.5 Btu/hr ft^2 °F yield the following values:

- Annulus air temperature 25°F
- Containment air temperature 50°F
- Minimum penetration temperature 32°F (Fan-coil coolant inlet)

These values assure that the containment shell NDT limit of 0°F will not be approached or breached.

The lower portion of the shell, which is embedded in concrete, is also afforded significant protection by the Shield Building.

Of the entire lower shell, the portion in the transition zone between El. 584'-0" and El. 605'-6", as shown in Figure 5.2-1, is the most critical because of its minimum distance to the outside surfaces. Analysis indicated that the shell between these two elevations would be at 30°F or higher if the outside temperature is constant at -20°F and the inside temperature is 34°F or higher. As previously discussed, the inside temperature will always be maintained above 34°F. Therefore, the containment vessel temperature in this region could never be below 30°F in normal operation.

The reactor will not be operated unless the containment vessel air temperature exceeds 40°F. This will assure a minimum 2°F margin above the lowest critical temperature of 38°F. As stated earlier, a condition where containment air temperature is 38°F or less is not considered credible.

5.2.1.5.5 Code Requirements

The design internal pressure for the Reactor Containment Vessel is as specified in the provisions of the “Winter 1965 Addenda” to Section III of the ASME Boiler and Pressure Vessel Code.

The design requirements for Class B vessels are contained in Paragraph N-1311 through N-1314 of the Addenda. Paragraph N-1312 states that the design internal pressure may differ from the maximum internal pressure but may not be less than 90 percent of the maximum containment internal pressure. A maximum internal pressure of 46 psig and a design pressure of 0.9 x 46.0 = 41.4 psig have been specified.

The Reactor Containment Vessel has been pressure-tested for acceptance of the vessel, air locks, equipment door and all vessel penetration nozzles in accordance with the rules of Section VIII, UG-100 and Section III, N-1314(d). The maximum test pressure was 1.25 times the design internal pressure i.e., 1.25 x 41.4 = 51.8 psig.

5.2.1.6 In-Service Inspection

The basis of the In-Service Inspection Program is ASME Boiler and Pressure Vessel Code, Section XI, 1992 Edition including 1992 Addenda Subsection IWE, “Requirements for Class MC and Metallic Liners of Class CC Components of Light-Water Cooled Power Plants”.

5.2.1.7 Design Stress Criteria

The Reactor Containment Vessel will retain the capability to restrict leakage to the acceptable specified level under all conditions of loading that might occur during its lifetime. The vessel is designed to exhibit a general elastic behavior under accident and all earthquake-loading conditions. No permanent deformations due to primary stresses are permitted in the design under any conditions of loading.

For the OBE, designated as loading Condition 1 in Table 5.2-1, the Reactor Containment Vessel is capable of continued safe operation during a DBA. For this loading condition, the structure will function within the normal design limits specified by Section III of the ASME Boiler and Pressure Vessel Code, Figure N-414 and as listed in Table 5.2-1. Loading Condition 1 provides the design basis upon which the Reactor Containment Vessel is code-stamped.

For the DBE, designated as Loading Condition 2, the margin provided in the design assures the capability to maintain the vessel in a safe operating condition. For this loading condition, the basic design was reviewed to insure that the Reactor Containment Vessel and its components retain their capability to perform their containment function.

Primary stress intensities are conservatively limited to 90 percent of the yield strength of SA 516-GR70 carbon steel plate at the accident temperature. The application of this criterion to Table N-414, ASME Boiler and Pressure Vessel Code, Section III is shown under Loading Condition 2 of Table 5.2-1.

Earthquake stresses are added linearly and directly to stresses caused by the DBA, dead loads, and the appropriate operating loads to obtain the total stresses. These total stresses are within the maximum stress limits allowed by the design criteria, listed in Table 5.2-1.

Prior to the special ruling of ASME Code Case 1392 (Reference 1). The interpretation of the ASME Code for the design of containment vessels was to treat all vessel configurations and loading under the design rules of Section III(b) and satisfy the basic stress intensity limits of paragraphs N-414.1, N-414.2, N-414.3 and N-414.4 of Section III.

The interpretation presently permitted by this code case is to accept the design provisions of Section VIII in the absence of substantial mechanical or thermal loads other than pressure.

The design rules of Section VIII are satisfied for all configurations and loadings explicitly treated by Section VIII, using “Sm” [See N-1314(b)] in place of “S” in the various formulas.

The Reactor Containment Vessel in this application is applicable to the requirements of ASME Code Case 1392. The minimum thickness of the bottom configuration is predicated on the design rules of Section VIII.

In consideration of the large diameter of the vessel the shell bottom was analyzed by the "Yale Shell Program" (Reference 2).

Circumferential compressive stresses resulting from internal pressure forces were calculated and held below the critical buckling stress by a margin of safety compatible with good pressure vessel design practice.

The design was reviewed to assure that any resulting deflections or distortions would not prevent the proper functioning of the structure or pieces of equipment and would not endanger adjacent structures or components. The ASME Boiler and Pressure Vessel Code provisions, for out-of-roundness tolerance was not considered appropriate for the cylindrical vessel of the magnitude of the Reactor Containment Vessel. Therefore, it was specified to have an out-of-roundness tolerance of not greater than one half of the ASME Boiler and Pressure Vessel Code permissible tolerance, i.e., one-half percent of the normal diameter.

All other applicable tolerances of fabrication and erection as specified in the ASME Boiler and Pressure Vessel Code were applied to the Reactor Containment Vessel.

The ellipsoidal bottom of the Reactor Containment Vessel is bonded to and in intimate contact with the support grout under the vessel bottom. It is noted that those surfaces internal and external to the vessel that are in contact with concrete will not be readily available for inspection.

This concept of Reactor Containment Vessel support and internal concrete construction is recognized by the ASME Boiler and Pressure code and has been approved on numerous nuclear power plants.

The successful application of this method of support is predicated on the inherent built-in quality of construction associated with pressure vessels, and the test requirements of acceptance and code certification.

All weld seams on the bottom are fully radiographed and have been leak tested at 5 psig and also at the design internal pressure.

5.2.1.7.1 Design Review and Analysis

The Reactor Containment Vessel was designed, fabricated, constructed, and stamped in accordance with the rules of Section III, Subsection B, of the ASME Boiler and Pressure Vessel Code.

The bottom head of the Reactor Containment Vessel was designed using the formulas of Section VIII of the ASME Code as allowed by Paragraph N-1314(a)(1), (Summer 1968 Addenda) when substantial mechanical or thermal loads other than pressure are not present.

Temporary stiffeners were added to protect the structure during the overload pressure test and prevent the possibility of any damage to the vessel during construction. Following the

overload pressure test, the temporary stiffeners on the bottom head were removed by arc air gouging the metal to within ¼" of the vessel plate surface. Then grinding the remaining metal smooth to the surface of the vessel, to prevent damage to the internal concrete or the vessel that could result from movements of the vessel. After removal of the stiffeners, the area was examined using the magnetic particle method.

The Reactor Containment Vessel's concrete fill support under the ellipsoidal bottom was placed using a concrete placement and grout. The grout is a two component epoxy polysulfide material containing no solvent and does not shrink. The mixture consists of an epoxy resin, an organic amine, and a polysulfide. It is chemically inert to the steel and concrete and therefore will not promote corrosion of these materials. The technique used is as follows:

1. The concrete fill was placed in a predetermined sequence of pours. The size, location and timing of placement of the individual pours were all considered in determining the pattern and sequence of pours.
2. The placement of low-viscosity chemical grout proceeded in sequence during the above operation after the concrete grout had completed its cycle of hydration and shrinkage. The chemical grout was pressure injected through grouting ducts. Injection continued at each duct until the chemical grout appeared around the periphery of the pour. This method ensured full bearing under every part of the Reactor Containment Vessel's ellipsoidal bottom.

After embedment in concrete, the bottom head is subject to both thermal and pressure loads not considered by the formulas of Section VIII. A detailed thermal study and stress analysis was performed to show compliance with the stress intensity limits of N-414.1, N-414.2, N-414.3 and N-414.4 as required by N-1342(a)(2). This analysis is of the type normally required for a Class A vessel.

The top of the internal concrete and the interior surface of the steel shell above the floor has been coated with a nuclear grade coating capable of withstanding a DBA. At the intersection of the concrete floor and the steel shell, a sealant was provided to prevent moisture from penetrating the joint.

The exterior concrete and the steel shell have been chemically bonded tight to assure no penetration of moisture. Above the chemical grout at the "air gap" between the steel shell and the concrete, the steel surface has been sandblasted, primed and coated with a rust inhibitive, high temperature paint. The "air gap" was formed with two layers of styrofoam with all joints staggered and taped and concrete poured against it.

The top of the concrete in the annular space has been provided with sumps and a concrete curb all around (Figure 5.2-1 and Figure 5.2-7) to collect any moisture.

The space between the concrete curb and the steel shell was caulked with a sealant to assure that moisture will not penetrate into the air gap.

5.2.1.8 Reactor Containment Vessel at Embedment Region

In its final configuration, the containment shell knuckle is embedded by the internal concrete to a point 2 feet-3 inches above the shell tangent line and externally to a point approximately 2 feet-9 inches below the tangent line. A transition zone exists in a region that extends from the top of the internal concrete to some point on the shell below the temporary stiffeners. This condition is shown in Figure 5.2-1.

Embedment of the Reactor Containment Vessel knuckle in concrete produces bending stresses, resulting from thermal and pressure expansion, at the interface between the encased and non-encased portions of the shell. These bending stresses were minimized by providing a smooth transition between the part of the shell, which is free to expand and the part, which is fixed in concrete.

Figure 5.2-2 and Figure 5.2-3 show the typical arrangement of the reinforcing steel patterns for the base slab and at the lower portion of the wall. The reinforcement in the discontinuity zone of the wall with the base is shown in Figure 5.2-2.

Figure 5.2-4 and Figure 5.2-5 show the typical arrangement of the reinforcing steel pattern for the dome and the upper portion of the wall. The reinforcement in the discontinuity zone of the wall with the dome is shown on Figure 5.2-4.

Figure 5.2-6 shows the typical arrangement of the reinforcing steel pattern at a typical large opening. In this illustration the opening was provided for an airlock. It is to be noted that where the general pattern of wall reinforcement has been interrupted by an opening additional perimeter beam reinforcing has been added.

Since the Shield Building is not subjected to any significant internal pressure, reinforcement bar anchorage will generally not occur in tension zones.

When the Reactor Containment Vessel is pressurized, in operational configuration, it will exert a pressure on the internal concrete in the knuckle region as the shell attempts to deform inward. Also, the vessel will exert a pressure on the concrete outside of the vessel where the elliptical head is tending to deform outward. These reactions on the concrete are due to the tendency of the elliptical head to become hemispherical in shape when pressurized.

The analysis of the concrete-steel shell interaction in the embedded zone is basically a flexibility method of analysis of the concrete-steel structural systems.

The primary objective of the analysis is to determine stresses in the steel shell and the contact pressures on the concrete from the steel in the embedment region.

Three structures are used in the analysis:

- Internal concrete
- Steel shell, and
- External concrete

The model of the ellipsoidal bottom shell structure is divided into carefully selected segments to best represent the shape of the model.

The restraint of the concrete on the steel shell is modeled using “Analogous Springs” and a distributed pressure. The “Analogous Springs” are represented by a flexibility model of both the internal and external concrete supplied by Pioneer Service & Engineering Company. This model is in the form of load per unit length of circumference per unit of concrete displacement and is given for various positions on a meridian line of the shell bottom. The pressures applied at the selected loading points of the shell bottom are equal to the algebraic sum of the internal pressure plus the reaction pressure of the concrete. The pressure distribution between loading points specified in the program is assumed to be linear.

Continuity and interaction are established by assuring that the deflections are equal at the points where concrete is in contact with the steel shell. Equations for the internal and external and contact points are constructed and solved for redundants. A trial and error procedure is used for the solution since the equations corresponding to the redundants with negative contact pressure must be eliminated.

A. Kalnins’ method (Reference 2) is used to develop the equations to be used in the flexibility analysis; i.e., deflections, shears, and loads.

The compatibility of deformations of the structures is amply demonstrated when the solution of the flexibility model is carried to the point where the deflections of structures in contact are equal. This has been done and the final internal and external contact pressures of the concrete on the steel are in equilibrium with the structures as a free body for axisymmetric loads. There are no non-axisymmetric loads considered acting on the bottom in this analysis.

5.2.1.9 Concrete and Steel Interface Design

The final stress report demonstrated that the Reactor Containment Vessel, as specified, analyzed, and designed, meets all applicable requirements of the ASME Code.

As a further verification of the design, a second overpressure test (1.25 times design pressure), not required by ASME Code, was performed at a pressure of 51.8 psig with the temporary vessel stiffeners removed and the internal concrete support system in place, but before fuel was loaded. The maximum pressure was maintained only long enough to verify the pressure level.

5.2.1.10 Non-Axisymmetric Loading Due to Concrete Shielding at Fuel Transfer Tube

An area 43.5 ft high and about 24 ft wide on the inside of the containment vessel is covered by interior concrete walls. This area will be referred to as the "cold spot."

The design basis for the steel containment vessel is that after a LOCA the internal pressure will peak at 46 psi at about 10 seconds, and the internal temperature will peak at 268°F, also at about 10 seconds. After that, both pressure and internal temperature will decline.

During the first 10 seconds after a LOCA the temperature of the inner surface of the containment vessel shell rises from 120°F to 155°F, and the outer surface rises from 120°F to 129°F. Thereafter, the shell temperature continues to rise to 165°F at the inner surface and 155°F at the outer surface. This increase does not occur in the portion of the shell protected by the internal concrete thus producing the "cold spot" which results in additional stresses in the steel shell. These stresses are classified as Thermal Stresses.

The area behind the "cold spot" is assumed not to be subject to the 46-psi internal pressure. Thus, the pressure around the circumference of the steel shell is unbalanced giving rise to local pressure stresses.

Kalnins' Static Shell Program was used to determine the effects of the missing temperature rise and the missing pressure increase at the "cold spot." For each investigation, 21 Fourier harmonics were combined to represent the sudden changes at the edges of the "cold spot."

Additional stresses due to missing temperature at the "cold spot," after 10 seconds, were obtained and are given in Table 5.2-11.

The circumferential stresses are the maximum stresses at the three elevations listed in the table.

In determining the effect of the missing pressure, cognizance was taken of the fact that the increase in pressure and temperature of the steel shell after a LOCA would cause an increase in diameter. This would result in a theoretical finite gap between the steel shell and the exterior face of the concrete walls. However, the unbalance in forces around the circumference of the shell, due to the missing pressure against the portion of the shell protected by the concrete wall, would cause the steel shell to press against the concrete and thus prevent the gap from opening. At the maximum internal pressure of 46 psi, a pressure differential of 3 psi is required to close the gap. Thus, the steel shell will then press against the concrete with a pressure of 43 psi. The additional stresses in the steel shell were calculated on this basis and are given in Table 5.2-12.

The additional stresses given in the table must be added to the stresses, which would exist if no "cold spot" were present. These stresses are summarized in Table 5.2-13.

The total, combined stresses in the containment vessel steel shell due to the presence of the "cold spot" are summarized in Table 5.2-16. These stresses occur 10 seconds after the start of LOCA. The stress intensity for each loading condition is also shown in this table. The stress intensity is calculated in accordance with Paragraph N-413 of Section III of the ASME Boiler and Pressure Vessel Code (1968 Edition).

The allowable stresses in the containment vessel steel shell were established by the criteria listed in Table 5.2-1. For the OBE condition, this table refers to Figure N-414 of Section III of the ASME Boiler and Pressure Vessel Code (1968 Edition). The limits of stress intensities in Figure N-414 are based upon the allowable stress intensity S(m). For Class B vessels, this allowable stress intensity is obtained from Section VIII of the ASME Code, and is 17,500 psi for A-516 Grade 70 steel. This allowable stress intensity is applicable to general membrane stress intensities when local membrane and bending stresses are not present. When the latter stresses are present, the allowable stress intensity is increased to 1.5S(m) or 26,250 psi. When secondary stresses due to differential thermal expansion are included, the allowable stress intensity is increased to 3.0S(m) or 52,500 psi.

Allowable stress criteria for the DBE are given in Table 5.2-1 under loading condition 2. The allowable stress intensities computed in accordance with these criteria are:

- General membrane = $1.16(S_m)$ = 20,300 psi
- General membrane plus bending = 1.6 x $(1.5S_m)$ = 30,450 psi
- All stresses including = $3S_m$ = 52,500 psi secondary stresses

The OBE and DBE dynamic vertical and horizontal seismic loads and overturning moments of the containment vessel are transmitted into the concrete foundation and sub-foundation through the combined action of friction and bearing on the shell bottom.

The lateral and vertical loads caused by earthquake are of such a minimal nature that the friction is neglected to simplify the analysis and a simplified but conservative approximation of the reaction bearing load is considered.

The seismic overturning moment of the containment vessel will produce vertical reaction pressures on the shell bottom. The horizontal seismic forces will produce lateral pressure reactions on the shell bottom. Since the forces are minimal, a conservative, simplified mode of lateral load transfer and analysis of steel and concrete is made.

First, the load analysis consists of using John A. Blume's modal analysis seismic acceleration curves for the containment vessel. The calculation of the vessel shear, membrane and surface stresses is by the application of the Kalnins' program to shells. The most critical area of stress in the steel shell under these conditions occurs in the discontinuity zone at the line of the

external embedment in the concrete. The calculated stresses and allowable stresses at this line are given in Table 5.2-14. The allowable stresses are based on the criteria of Table 5.2-1.

Next, the total lateral seismic load of the containment vessel is conservatively assumed to be carried by tangential shear above the embedment line into the vessel plates whose planes are most nearly oriented in the direction of the seismic loads. These loads will then be carried by membrane action into a hoop band of limited width at or near the mezzanine floor line as an integral internal member. This lateral load is thereby transferred to the diametrically opposite surface of the internal concrete member. The load is then transferred through the shell plate onto an expanded area of the external concrete foundation.

To further simplify the analysis, this band is conservatively assumed to be 20 in. wide and the resulting stresses and allowable stress criteria are shown in Table 5.2-15.

The allowable stress intensities are also shown in Table 5.2-16.

It can be determined from an examination of Table 5.2-16 that the presence of the “cold spot” does not result in any case in which actual stress intensity exceeds the allowable stress intensity.

After the first ten seconds following a LOCA, the internal pressure drops and the temperature differential between the two surfaces of the steel shell also declines, but the average temperature of the shell increases another 18°F to 160°F. The change in stresses due to the first two effects is greater than that caused by the third effect. The net result is a decline in total stresses after about ten seconds.

It has previously been pointed out that at ten seconds after a LOCA, the steel shell exerts a 43-psi pressure against the outer surface of the concrete wall. At the same time there is an internal pressure of 46-psi against the inner surface of the concrete wall. The 3-psi pressure differential must be carried by the concrete wall.

During the first ten seconds following a LOCA the pressures do not increase linearly, so the pressure differential could, briefly, exceed 3-psi during this interval. For instance, at one second the interior pressure is 12 psi. This 12-psi pressure was used to calculate stresses in the concrete wall on the conservative assumption that the steel shell had not had time to react and press against the concrete.

STRESS computer program was used to calculate moments and shears, and Pioneer Service & Engineering Co. Program S-020 was used to determine the required reinforcing steel. The amount of reinforcing steel thus determined did not exceed 35 percent of the steel required by other loading conditions. Thus, the internal concrete structure will not be overstressed by the loads caused by the presence of the “cold spot.”

In conclusion, it has been demonstrated that all stress combinations, which include those computed on the basis of non-axisymmetric loading at the “cold spot” meet the criteria for allowable stress for the steel containment vessel and the interior concrete construction.

5.2.1.11 Testing of the Reactor Containment Vessel on Temporary Supports

The vessel was erected on a temporary support system. To fulfill the requirements of the ASME Code and provide a basis for acceptance of the vessel, the acceptance overpressure test was made while the vessel was supported on the temporary support system. To provide additional safety margin for those engaged in the erection and testing of the vessel, internal stiffeners were provided as a precautionary measure.

The temporary internal stiffeners consisted of four flat bars that were attached by fillet welds to the inside surface of the shell in the knuckle area. These bars are circumferential rings spaced about two feet apart. The stiffener bars are shown in Figure 5.2-1. These stiffener bars were installed to provide lateral stability of the knuckle plate during pressure testing.

This was necessary because the knuckle plate is subject to circumferential compression stress when it is pressurized for testing. After the vessel was acceptance-tested, the temporary stiffeners were removed and the required lateral support was provided by internal concrete structures.

The vessel was temporarily supported on fifteen laterally-braced pipe columns shaped to the contour of the vessel. The columns were welded to the shell plate immediately below the tangent line at the knuckle and also to the horizontal web of an external horizontal tee member. This horizontal tee ring-girder developed the lateral stiffness of the temporary bracing. These temporary supports are shown in Figure 5.2-7.

The temporary structure supported the weight of the vessel (2300 tons) and specified construction loads. In addition, it resisted lateral loads, such as wind, which were imposed during construction. The vessel loads were then transferred to the grout support. The temporary legs, bracing, and external tee member have been removed by cutting to within ¼ inch of the vessel face and then ground smooth.

5.2.1.12 Wind Analysis

The Reactor Containment Vessel and penetrations associated with Primary Containment are completely enclosed by the Shield Building and are therefore not directly subjected to the forces and effects of wind and tornadoes.

5.2.1.13 Seismic Analysis

The seismic analysis of the Containment System, critical appurtenances, structures, and equipment were based on the ground response acceleration spectra, the building response spectra (Reference 3) and the floor response acceleration spectra (Reference 4). For details see Appendix B.

5.2.1.14 Building Response Spectra

Building response spectral analyses (Reference 3) were performed, based on OBE (0.06g) and DBE (0.12g). The analyses developed values for maximum translational accelerations, displacements, shears and moments and maximum torsional accelerations, moments and rotations of the building structures.

The mathematical model considered the three major structures (Reactor, Auxiliary and Turbine Building) in a combined idealized three-dimensional model with 63° of freedom-translation for symmetrical elements, and both translation and torsional rotation for unsymmetrical and irregular elements.

5.2.1.15 Floor Response Acceleration

The floor response acceleration spectral analyses (Reference 4) are based on the OBE (0.06g) and the DBE (0.12g). The analyses developed the generated acceleration time-history response spectra at mass points designated for the seismic analysis of critical equipment and piping located throughout the structural complex. The mathematical model utilized for this analysis is the same one used for the building response spectra analysis.

5.2.1.16 Airlock Seismic Analysis

The specification for the Reactor Containment Vessel requires that the Earthquake design include the effects of the airlocks vibrating as an independent system. The Reactor Containment Vessel contractor, Chicago Bridge & Iron Co., (CB&I) developed an analysis of the airlock system under their seismic consultant, John A. Blume & Associates. The calculations were performed according to this method, and the results show that the stresses in the airlocks do not exceed the allowable stresses given in Table 5.2-1.

In this method of analysis, the horizontal earthquake is assumed to act in one of two directions as shown below. Case I will result in seismic forces and moments from the airlock being applied to the Containment Vessel in the circumferential direction. Case II will result in a radial thrust being applied to the Containment Vessel.

5.2.1.17 Dynamic Constants for Airlocks

Since the airlocks are completely separated from the concrete Shield Building and adjacent concrete structures by an air space, there will be no interaction between airlock structures and concrete structures.

5.2.1.17.1 Case I - Vertical and Circumferential Directions

The spring constant for the seismic analysis of airlocks in the circumferential direction of the vessel shell is evaluated by applying a unit moment (1000 in-lbs) at the shell and determining the rotation (θ) at the shell-to-nozzle junction (Reference 5):

$$K = \frac{M}{\theta}$$

$$W = \left(\frac{K}{I}\right)^{\frac{1}{2}}$$

$$T = \frac{2\pi}{W}$$

Where: K = Spring constant shell

W = Angular frequency of lock

I = Moment of inertia of lock about point of support on shell

T = Fundamental period of lock

M = Unit moment at shell

θ = Rotation at shell to nozzle junction

5.2.1.17.2 Case II - Radial Direction

In a similar manner the spring constant in the radial direction of the vessel shell is determined by applying a unit thrust (1000 lbs) at the shell and determining the deflections (w) at the shell-to-nozzle junction (Reference 6):

$$K = \frac{P}{w}$$

$$T = 2\pi\left(\frac{W}{Kg}\right)^{\frac{1}{2}}$$

Where: W = Weight of lock plus insert

g = 386.4 (in/sec²)

P = Unit load

w = Deflection at shell to nozzle junction

5.2.1.18 Seismic Forces on Airlocks

The vibrational driving force on the airlocks was determined from accelerations derived from the response acceleration spectra prepared by the seismic consultants, John A. Blume & Associates (Reference 4). Using the fundamental period of the airlock (T) and 1 percent damping (as recommended by John A. Blume & Associates), the acceleration in percent of gravity is obtained. The airlock dead loads were then multiplied by this acceleration to obtain the seismic forces acting on the airlock.

The applicable ASME Section III allowable stress intensities for stresses due to pressure and applied loads at the containment vessel shell to airlock nozzle junction were calculated as follows:

For OBE

- Membrane Stress: PL = (1.5) (17500) = 26250 psi
- Surface Stress: PL + Q = (3) (17500) = 52500 psi

For DBE

- Membrane Stress: PL = (1.16) (1.5) (17500) = 30450 psi

  PL + Q = (3) (17500) = 52500 psi

5.2.1.19 Seismic Stresses

Stresses in the shell due to the airlocks vibrating as an independent system from a horizontal and vertical earthquake were determined by the use of Welding Research Council Bulletin 107 and Chicago Bridge and Iron Computer Program 6-20N.

Stresses were limited to the allowable stress criteria as set forth in Table 5.2-1.

A horizontal earthquake acting perpendicular to the airlock (Case 1) will result in a circumferential shear and moment being applied to the shell. An earthquake acting parallel to the airlock (Case II) will subject the shell to a radial thrust.

Stresses were checked at three locations: at the neck-to-insert-plate junction, at the insert-to-shell junction, and at a distance of 0.5(Rt)½ from any local stress area. (R = radius of curvature and t = thickness).

Stresses in the reinforcing insert-plate and in the shell due to the applied earthquake loads were calculated. Pressure stresses were added directly to the earthquake stresses, and an equivalent stress intensity was calculated (per maximum shear theory) compared to allowable values in Table 5.2-1.

The designs are based on the OBE and are reviewed for the case of DBE to assure that the stress limits for this loading are not exceeded.

A summary of the membrane and surface stresses at the connecting weld of the containment vessel shell plate to the airlock barrel nozzle plate for the two earthquake loading conditions is given in Table 5.2-10.

5.2.1.20 Vertical Earthquake

A vertical earthquake acceleration applied to the Vessel and airlocks was assumed to act simultaneously with the horizontal earthquake.

5.2.1.21 Soil - Structure Interaction

The problem of soil-structure interaction was accounted for by introducing rotational and translational springs in the model used for seismic analysis. The rotational springs account for the deformation of the soil under the building, i.e., rocking, and the translational springs account for frictional resistance of the soil on the bottom and sides of the building, as well as soil bearing against the sides of the building. The stiffness of these springs was determined by using elastic finite element method of analysis and checked using equations developed for the case of rigid plate on a semi-infinite elastic half space.

5.2.1.22 Foundation Damping Factor

The following recommendation on damping factor to be employed for the foundation materials was made by Dr. Ralph B. Peck:

"Damping values for the rocking mode have not been well established for clay soils. Although some laboratory information is available, it seems preferable to use values (expressed as percent of critical damping) that have been back calculated from prototype installations, such as machine bases. Values from 5.1 to 7.1 percent were determined for a soft clay on this basis by D. D. Barkan (Reference 7) "Dynamics of Bases and Foundations." McGraw-Hill Book Company, New York, p. 126 (1962). The data quoted in Whitman (Reference 8) and Richart "Design Procedures for Dynamically Loaded Foundations," ASCE, Journ. Soil Mechanics and Foundations Division, Vol. 93, No. SM6, Nov. 1967 pg.178, which refer to Barkan's text, p. 67, are based on laboratory tests and may be in error."

"The damping factor can be expected to be smaller for a stiff clay than for a soft clay. On the other hand, the presence of granular material with an average thickness on the order of 10 ft between the clay and the bedrock at the Kewaunee site will introduce considerably more damping

than would the presence of an equivalent amount of stiff clay. For this reason, the damping factor would be greater than for clay alone. I would recommend, therefore, the use of a factor of 4 percent for the design earthquake and 6 percent for the maximum earthquake. The increase is permissible because the deformations associated with the greater earthquake would involve greater strains and loss of energy."

Dr. Peck's recommendation was the subject of discussion between John A. Blume & Associates (Seismic Design Consultants), Pioneer Service & Engineering Co., and Dr. Peck. As a result of these discussions it was agreed that 5 percent damping factor would be used for both OBE and DBE. For further details refer to Appendix E.

5.2.1.23 Penetrations

5.2.1.23.1 Design Basis

To maintain designed containment integrity, containment penetrations have the following design characteristics:

1. They are capable of withstanding the maximum internal pressure, which could occur due to the postulated rupture of any pipe inside the Reactor Containment Vessel.
2. They are capable of withstanding the jet forces associated with the flow from a postulated rupture of the pipe in the penetration or adjacent to it, while still maintaining the integrity of containment.
3. They are capable of accommodating the thermal and mechanical stresses, which may be encountered during all modes of operation and test.
4. Materials of piping penetrations furnished as a part of the Reactor Containment Vessel are either ASME SA-333 GR. 6 or ASME SA-312 TP. 304. All hot penetrations are fabricated of ASME SA-333 GR. 6. The cold penetrations are fabricated of either of the foregoing materials, but in all cases are compatible with the material of the process line, which is to be welded directly to the penetration nozzle.
5. The materials for penetrations, including the personnel access airlocks and the equipment access hatch, conform to the requirements of the ASME Boiler and Pressure Vessel Code, Section III, Nuclear Vessels, Code Case 1392, Rev 0. The process and guard pipes and flued heads were designed, specified and fabricated in accordance with the Code for Pressure Piping, USASI B31.1.0-1967, N-7, and ASME Boiler and Pressure Vessel Code Section III, 1968, Class B, Code cases 1177, 1330, and 1425.

Charpy V-notch tests were performed on the material used for construction of the carbon steel flued heads and penetrations. The test temperature was 0°F with break values based on three material samples from each penetration or flued head. All test data showed that the samples had

greater than 20 ft-lbs energy capability. The description of the tests and data are filed at the Kewaunee site.

5.2.1.23.2 Electrical Penetrations

The electrical penetration assemblies are designed for field installation by welding to the inside end of the nozzle type penetration passing through the Reactor Containment Vessel wall. Each penetration assembly is provided with a single connection to allow pressure testing for leaks. All components of the penetration assemblies are designed to withstand, without damage or interruption of operations, the forces resulting from an earthquake, in addition to the normal and accident design requirements.

All materials used in the design are selected for their resistance to the environment existing under normal operation and the DBA.

Figure 5.2-8 shows the D.G. O'Brien penetration configuration for the following types of electrical penetrations provided in the design:

- Type I — Medium Voltage Power (MVP) - 5000 Volt Insulation for use on 4160 volt Resistance Grounded System - 4 provided
- Type II — Low Voltage Power (LVP) - 600 volt insulation for use on 480V grounded system - 18 provided
- Type III — Instrument & Control (I&C) - 600 volt insulation - 22 provided
- Type IV — Control Rod Drive Power (CRDP) - 1000 volt insulation for use on 140V DC-5 provided
- Type V — Nuclear Instrumentation Systems (NIS) Triax Cables - 4 provided.
- Type VI — Radiation Monitor Cables (RM) - 1 provided

The electrical penetrations entering the Reactor Building are subdivided into six basic groups having twelve penetration nozzles in each group. Electrical penetration assemblies are installed in the penetration nozzles. Spare penetration nozzles in each group are sealed with a welded cap. Instrument and control leads are segregated from power leads by placement into different electrical penetration assemblies. The circuit arrangements are as follows:

- Group A — Normal power and Train "B" power
- Group B — Normal power and Train "B" power, control and instrumentation, and "White" Reactor Protection Channel
- Group C — Normal instrumentation, Train "B" instrumentation, and "Blue" Reactor Protection Channel.

- Group D Normal instrumentation, Train “A” instrumentation, and “Red” Reactor Protection channel.
- Group E Normal control, Train “A” control and instrumentation, and “Yellow” Reactor Protection channel.
- Group F Normal power and Train “A” power.

In addition to the above, there are penetrations into the two airlocks which are used for door position signal circuits, internal airlock lighting and communication circuits.

The approximate sequence of testing and tests performed on both prototype and production DG O’Brien penetrations are listed in Table 5.2-2. Detailed descriptions of the manufacturer’s test procedures are contained in D.G. O’Brien, Inc. Test Procedure Manual. The test data for all the tests performed are filed at the Kewaunee Reactor site. Since the specifications are different for each application, it is not possible to summarize the data into a concise form.

Leak Tests were performed on the D.G. O’Brien penetrations using helium leak-detection procedures. The tests were performed at a temperature of 270°F with a helium differential pressure of 52 psig. Maximum allowable leak rate was E-6 cc per second. Leak tests were performed at least twice during the sequence of tests on prototype models and once on each production unit. The leak rates measured were all less than the allowable leak rate (E-6 cc/sec).

Two Conax electrical penetration assemblies were installed to provide additional instrumentation and low voltage power circuits required for the Reactor Vessel Level Indicaton System (RVLIS) and Appendix R modifications. The Conax penetration assemblies, designed and tested in accordance with IEEE Standard 317-1976 as modified by Reg. Guide 1.63-1978; will withstand, without damage or interruption of operations, the forces resulting from an earthquake, in addition to the normal and accident design requirements. The Conax penetration assemblies are designed for field installation by welding to the inside end of a spare nozzle type penetration passing through the reactor containment vessel wall. Each Conax penetration assembly is provided with a single connection to allow pressure testing for leaks. The Conax low voltage instrumentation assembly is installed in Group C. The Conax low voltage power and control assembly is installed in Group F.

5.2.1.24 Piping Penetrations

All penetrations listed in Table 5.2-3, except the vacuum breakers, penetrate the Shield Building as well as the Reactor Containment Vessel. Both the Reactor Containment Vessel and Shield Building are provided with capped spare penetrations for possible future requirements.

5.2.1.25 General Design Description

All process lines traverse the boundary between the inside of the Reactor Containment Vessel and the outside of the Shield Building by means of piping penetration assemblies made up of several elements. Two general types of piping penetration assemblies are provided; i.e., those that are not required to accommodate thermal movement (designated as cold penetrations in Figure 5.2-9) and those which accommodate thermal movement (hot penetrations depicted in Figure 5.2-10 and Figure 5.2-11). All piping penetration assemblies are listed in Table 5.2-3.

Both hot and cold piping penetration assemblies consist of a containment penetration nozzle, a process pipe, a Shield Building penetration sleeve and a Shield Building flexible seal. In the case of a cold penetration, the Containment Vessel penetration nozzle is an integral part of the process pipe. For hot penetrations, a multiple-flued head becomes an integral part of the process pipe, and is used to attach a guard pipe and an expansion joint bellows. The expansion joint bellows is welded to the Reactor Containment Vessel penetration nozzle. The flued head fitting is the only part of the penetration assembly, which comes into contact with the Shield Building at any time.

At the termination of a piping penetration assembly near the Shield Building, a low-pressure leakage barrier, is provided in the form of a Shield Building flexible seal as shown in Figure 5.2-9, Figure 5.2-10 and Figure 5.2-13. These devices provide a flexible membrane type closure between the Shield Building penetration sleeve, which is embedded in the Shield Building, and the process pipe. In the case of hot penetrations 8 and 11, a circular plate is being used rather than a flexible seal as shown in Figure 5.2-11. This plate will serve as both an anchor and a Shield Building seal.

5.2.1.26 Design Basis Common to Hot and Cold Piping Penetrations

All Containment Vessel penetration nozzles are designed to meet the requirements for Class B vessels under Section III of ASME Boiler and Pressure Vessel Code. In compliance with the code, the operating stresses in a containment vessel penetration nozzle caused by the attached penetration assembly are limited to the allowable values given in the code. For earthquake analysis, Section III of the ASME code permits the use of 1.5 times the allowable stress value for the material being used.

The double-bellows expansion joints in the hot-pipe penetration assemblies and the Shield Building flexible seals for all pipes are designed to accommodate the maximum combination of vertical, radial, and horizontal differential movements of the Reactor Containment Vessel, the Shield Building, and the piping. The design considers the calculated displacements resulting from earthquake, pressure, and temperature, as presented in Figure 5.2-12, and also accounts for the actual measured displacement of representative penetration nozzles made during the initial pressure testing of the Containment Vessel.

5.2.1.27 Design Evaluation Common to Hot and Cold Piping Penetrations

Seismic loads on Containment Vessel penetration nozzles were determined by performing a dynamic model analysis of the piping systems. Response spectra at the piping system anchor points were used in this analysis. These response spectra were developed from the results of a dynamic time-history seismic analysis of the plant structures. Differential movement between points in the various structures have been included in the analysis of the piping.

The validity of the computer program used to perform the piping system seismic analysis was proven by comparison with an independent analysis of selected systems performed by recognized consultants.

Loads on Containment Vessel penetration nozzles due to thermal expansion of the pipe, thermal and pressure movements of the Reactor Containment Vessel, and piping system weight were determined by a flexibility analysis of the piping system. This analysis was performed with the aid of a computer program using established methods documented in current technical literature. The piping configuration and supports, restraints, or anchors on each side of the penetrations were designed to limit the stresses in the Containment Vessel at the penetration nozzle to the criteria defined in Appendix B.

5.2.1.28 Design Description - Hot Penetrations

A hot piping penetration assembly is used when the differential between the normal operating temperature of the fluid carried by a process line and the Reactor Containment Vessel wall temperature would create unacceptable thermal or cyclic stress at the attachment of the vessel penetration nozzle.

In addition to the elements contained in a cold piping penetrations assembly, as shown in Figure 5.2-9, a hot assembly has a multiple-flued head, a guard pipe, an expansion bellows and an impingement ring. The multiple-flued head is machined from a solid forging. It is welded into, and becomes an integral part of, the process line. The inner flue provides support for the guard pipe and the outer flue provides support for the expansion joint bellows. The guard pipe is located concentric to the process pipe, and is cantilever-supported by a weld attachment to the inner flue of the flued head. The length of the guard pipe is set so that it extends past the Reactor Containment Vessel penetration nozzle into the vessel.

The only interaction between the hot penetration assemblies and the Shield Building is through the multiple-flued head. This interaction takes place in one of two ways and is described as follows:

1. For the main steam, feedwater and residual heat removal penetrations, the multiple-flued head passes through a sleeve in the Shield Building as shown in Figure 5.2-10 and Figure 5.2-13. The sleeve acts as a horizontal and vertical guide, which allows rotational and axial movements. The piping system and hence the flued head is allowed to rotate or move

axially within the Shield Building sleeve but is restrained by the sleeve from moving in any direction perpendicular to the axis of the process line for all seismic, temperature, weight and jet loads. There are no pressure loads that have any effect on the flued head - Shield Building interaction for these assemblies other than the vertical and transverse movements of the containment vessel due to internal vessel pressure. The loads due to this movement are small, being a function of the transverse spring constant of the penetration expansion bellows, and have been considered in the design of the process line, the multiple flued head and the Shield Building sleeve.

2. For the steam generator blowdown and letdown line penetrations the multiple-flued head is anchored to a sleeve in the Shield Building as shown in Figure 5.2-11. All movement of the flued head and consequently the process line is restrained at this point. The design of this anchor and the process line considered all loads due to seismic, weight, temperature, pressure and pipe rupture jet effects of both the piping system and the structures.

The expansion joint bellows is attached at one end to the outer flue of the flued head and at the other end to the Reactor Containment Vessel nozzle. The expansion joint is provided with a double-layered bellows that has a connection between bellows for integrity testing. An impingement ring is mounted on the guard pipe to protect the expansion joint bellows from jet forces that might result from a pipe rupture inside containment.

The multiple-flued head with its associated guard pipe and expansion joint bellows provides a leak-tight seal for the extension of the containment boundary where the hot penetration assembly traverses the Shield Building annulus.

5.2.1.29 Design Basis - Hot Penetrations

Hot piping penetration assemblies are provided to:

1. Prevent unacceptable thermal and cyclic stress on Reactor Containment Vessel penetration nozzles,
2. Accommodate thermal movement, and
3. Protect containment from the effects of a hot process pipe rupture in the annulus between the Shield Building and the Reactor Containment Vessel.

Where hot penetration assemblies traverse the Shield Building annulus, they are designed to provide considerable margin between code allowable stress values and maximum calculated stresses in the pipe. This was accomplished by using 1.5 times the system design pressure to calculate the pipe wall thickness for the process and guard pipe, using the formula and allowable stresses given in USASI-B 31.1.0-1967. Under the normal B31.1.0 code practice, the system design pressure alone is adequate for calculating the pipe wall thickness. The same procedure was used to set the thickness of the guard pipe and the multiple-flued head. During RFO 28

instrumentation tubing at Penetration #3, located between containment and the shield building was analyzed to AME Section III, reference Table B.7-6.

5.2.1.30 Design Evaluation - Hot Penetrations

Stresses resulting from the combination of loads defined in Appendix B, Section B.7.2 were calculated for a typical process pipe in a hot piping penetration assembly using the cross sectional area of the pipe wall thickness as required to meet 1.5 times system design pressure. Comparison of calculated stress values with code allowable stresses shows:

- Thermal stresses are less than 50 percent of allowable;
- Combined longitudinal stresses are less than 50 percent of allowable;
- Hoop stresses are less than 60 percent of allowable.

The design criterion applied to the hot penetration guard pipes is defined in Table B.7-3 of Appendix B and is the same as that applied to all Class I piping. The allowable stress values and stress analysis results for normal, upset and faulted loading conditions for the main steam and feedwater guard pipes are shown in Table 5.2-18. The values listed represent the peak values that will occur at any given location in the guard pipe. This table shows that calculated guard pipe stress levels are well within those allowed by the criteria given in Table B.7-3 for all loading conditions. The main steam and feedwater penetrations were selected for this study because their failure would have the most severe consequences in the Shield Building annulus. A review of the design of the other hot penetration guard pipes indicates that calculated stress levels for these guard pipes would be of the same order of magnitude as for the main steam and feedwater guard pipes and well within allowable values.

5.2.1.31 Main Steam Piping Penetrations

The main steam piping penetration assembly, shown in Figure 5.2-13, uses the same elements as a hot piping penetration assembly. In addition, the main steam piping is anchored to the interior concrete of the Reactor Containment Vessel.

A limit stop designed to control lateral movement but permit axial movement is provided around the main steam piping inside containment. This limit stop serves to limit pipe movement in the event of a longitudinal pipe break, thus serving to control pipe whip inside containment. The multiple-flued head is also designed to transfer lateral loads that could result in the event of a main steam piping rupture exterior to the Shield Building, to a specially designed structural arrangement in the Shield Building. A lateral axial limit stop similar to the one provided inside containment is also provided exterior to the Shield Building.

5.2.1.32 Design Basis - Main Steam Piping Penetrations

The main steam piping between the anchor inside containment and the first isolation valve outside of the containment has a wall thickness selected by using 1.5 times the system pressure and normal code allowable stress values. The main steam piping anchor inside containment is designed to sustain the full force resulting from a 360° circumferential break of the main steam piping. The other requirements previously discussed for a hot piping penetration assembly are also met.

5.2.1.33 Equipment and Personnel Access

The equipment hatch and air locks are supported entirely by the Reactor Containment Vessel and will not be connected either directly or indirectly to any other structure.

The equipment hatch and air lock was fabricated from welded steel and furnished with a double-gasketed flange and bolted dished door. Provision is made to pressure-test the space between the double gaskets of its flange.

Two personnel air locks are provided. Each personnel air lock is a double-door welded steel assembly. Quick-acting type equalizing valves are provided to equalize pressure in the air lock when entering or leaving the Reactor Containment Vessel. Provision is made to pressure test the air locks for periodic leak-rate tests.

The two doors in each personnel air lock are interlocked to prevent both from being opened simultaneously and to ensure that one door is completely closed before the other door can be opened. Remote indicating lights and annunciators in the Control Room indicate the door operational status. Provision is made to permit by-passing the door interlocking system with a special tool, to allow doors to be left open during plant cold shutdown. Each door lock hinge can be adjusted to assist proper seating. A lighting and communication system, which can be operated from an external emergency supply is provided within each air lock.

5.2.1.34 Fuel Transfer Penetration

The fuel transfer penetration provided is for fuel movement between the reactor refueling cavity in the Reactor Containment Vessel and the spent fuel pool. This penetration consists of a 20-inch stainless steel pipe installed inside a 24 inch pipe. The inner pipe acts as the transfer tube and is fitted with a testable double-gasketed blind flange in the reactor refueling cavity, which provides containment integrity. A standard, normally closed gate valve in the spent fuel pool canal is also provided to isolate the refueling cavity from the spent fuel pool. This arrangement prevents leakage through the transfer tube in the event of an accident. The outer pipe is welded to the Reactor Containment Vessel. Bellows expansion joints are provided between the two pipes to compensate for any differential movement.

5.2.1.35 Containment Supply and Exhaust Purge Duct Penetrations

The ventilation system purge duct and make-up duct penetrations are welded directly to the penetration nozzles in a manner similar to the cold piping penetration. The ducts are circular in section and designed to withstand the Reactor Containment Vessel maximum internal pressure. They are provided with isolation valves as described in Section 5.3.

5.2.1.36 Missile Protection Features

High-pressure RCS equipment, which could be the source of missiles is suitably protected either by the concrete wall enclosing the reactor coolant loops or by the concrete operating floor to block any passage of missiles to the containment walls. The steam drum, which forms an integral part of the steam generator, represents a mass of steel which provides protection from missiles originating in the section of the Containment within the shield wall and below the operating floor. A concrete structure is provided over the RCCA drive mechanisms to block any missiles generated from a hypothetical fracture of a RCCA housing.

The missile shield structures inside Containment were analyzed using the conservation of momentum method. The penetration depth was calculated by the Ballistic Research Laboratories Formula for steel and concrete.

Missile protection is designed to the following criteria:

1. The Reactor Containment Vessel is protected from loss of function due to damage by such missiles as might be generated in a loss-of-coolant accident (LOCA) for break sizes up to and including the double-ended severance of a main coolant pipe (DBA);
2. The Engineered Safety Features Systems and components required to maintain containment integrity are protected against loss of function due to damage by missiles.

During the detailed plant design, the missile protection concept necessary to meet these criteria was developed. These concepts are:

1. Components of the RCS are examined to identify and to classify missiles according to size, shape and kinetic energy for purposes of analyzing their effects.
2. Missile velocities are calculated considering both fluid and mechanical driving forces, which could act during missile generation.
3. The structural design of the missile shielding takes into account both static and impact loads.
4. The RCS is surrounded by reinforced concrete and steel structures designed to withstand the forces associated with double-ended rupture of a main coolant pipe, and designed to stop these missiles.

The types of missiles for which protection is provided are:

- Valve Stems
- Valve bonnets
- Instrument thimbles
- Various types and sizes of nuts and bolts
- Complete RCCA drive mechanisms, or parts thereof
- Piece of pipe
- Pressurizer valves, instrumentation thimbles and heaters

Removable slabs, blocks and partitions were evaluated to determine whether or not they could become possible missiles. These items were reviewed to assure that the functions of safety related structures and equipment will not be affected during an OBE or tornado.

Removable slabs or plates, which were found to be potential missiles are anchored to Class I structures by means of bolts and anchor bolts. Concrete inserts and bolts provided for removing the slabs, are designed with lifting capacities equal to two times their normal design stress capabilities.

Concrete block walls and partitions which are adjacent to Class I (seismic) equipment or form the boundary of zone “SV” are designed under Class I seismic requirements, reinforced and anchored to Class I structures. Recommended construction practices of the Uniform Building Code were used as a minimum requirement.

The Reactor Building crane is also regarded as a potential earthquake-produced missile. The Reactor Building crane was analyzed for seismic forces under maximum expected crane load conditions during refueling. The procedure for seismic analysis is treated as described herein before in this Section. The design provides for no loss of crane support or structural integrity during a DBE, and that no parts will shake loose.

To assure the stability of the crane during an earthquake, the bridge and trolley are equipped with fitted rail yokes that will allow free-rolling movement but will prevent the wheels from being lifted or derailed. The structural steel and Reactor Containment Vessel wall supporting the crane are designed to withstand these earthquake-induced forces.

The bridge and trolley wheels are equipped with electrically activated, spring set brakes. Upon loss of power or when the crane or trolley is not under operator control, the springs activate the brakes locking the wheels firmly in place to prevent rolling. The positive wheel stops provided and designed to prevent overtravel of the trolley also prevent the trolley from leaving the rails

even in the unlikely event of brake failure. For details about missile protection of the Reactor Containment Vessel and Shielding Building, refer to Appendix B, Section B.9.

5.2.1.36.1 Insulation

Insulation is not required for the Reactor Containment Vessel or the Shield Building.

5.2.1.36.2 Shielding

The primary performance objective of radiation shielding within the Reactor Containment Vessel is to minimize the exposure of plant personnel to radiation emanating from the reactor and auxiliary systems. The radiation levels prevalent during plant operation, as well as those experienced upon shutdown, are recognized in the determination of the shielding requirements as described in Section 11.2. The secondary performance objective of the radiation shielding is to minimize radiation effects upon operating equipment as described in Section 11.2.

5.2.2 Shield Building Design

5.2.2.1 Design Conditions

The Shield Building is a reinforced concrete structure of vertical cylindrical configuration with a shallow dome roof. An annular space is provided between the Reactor Containment Vessel shell and the wall of the Shield Building to permit construction operations and periodic visual inspection of the Reactor Containment Vessel. The volume contained within this annulus is approximately 374,000 cubic feet.

The Shield Building concrete wall is 2'-6" thick and the dome is 2'-0" thick for biological shielding requirements. The design bases for shielding requirements for operational radiation protection are discussed in Section 11.2. The results of analysis with respect to assumed post-accident conditions using these design parameters are discussed in Section 14.3.5.

The normal ambient temperature in the annular space is set by heat loss through the Reactor Containment Vessel and Shield Building. The design assures that the Reactor Containment Vessel metal temperature can be maintained above 30°F.

Following the DBA, displacement of the containment shell due to the post-LOCA pressure/temperature increase inside the containment and heat transferred to the air in the annular space could cause a slight pressure rise. This annulus pressure transient is limited to less than 4.0" H_2O by venting the annular space. Conservative assumptions for temperature transmission to the space, and pressure drop in the Shield Building Ventilation (SBV) system were used in sizing the ventilation system. Following this initial pressure transient, the Shield Building is maintained at a slight negative pressure with respect to the Auxiliary Building-between ½" and 2½" H_2O. The Shield Building seals are designed to accommodate these pressures.

The structure was analyzed to assure adequate strength to accommodate thermal stresses resulting from the above temperature-induced thermal gradients.

The following loadings are considered in the design of the Shield Building:

- Structure dead load
- DBA load
- Live loads
- Wind load
- Tornado load
- Uplift due to buoyant forces
- Earthquake loads
- External missiles

5.2.2.2 Design Leakage Rate

The Shield Building is designed so that its inleakage rate is not greater than the amounts indicated in Figure 5.2-14. The inleakage rates shown in Figure 5.2-14 are total leak rates including the leakage through the personnel doors. The originally calculated contribution to total leak rate from the various sources of inleakage, with a differential pressure of ¼" of water is shown in Table 5.2-7. These leak rates will in most cases vary linearly with pressure, and extrapolations made on this basis are shown in Figure 5.2-14.

Figure 5.2-14 also shows the measured as-built leakage rate and a modified design basis leakage rate. For discussion of these leakage rates see Section 5.5.1.

5.2.2.3 Design Loadings

5.2.2.3.1 Dead Load

Dead load consists of the dead weight of the Shield Building, the Reactor Containment Vessel, grout under the Containment Vessel, the foundation slab, and the weight of concrete, structural steel, equipment, and miscellaneous building items within the Reactor Containment Vessel.

The basis for calculation of weights is given in Section 5.2.1.

5.2.2.3.2 Design Basis Accident Load

The DBA load is determined by analysis of the pressure and temperature transients in the annulus during a DBA.

5.2.2.3.3 Live Load

Live load consists of snow loads on the dome applied uniformly to the top surface of the dome at 40 pounds per horizontal square foot (PSF).

5.2.2.3.4 Wind Load

Wind loading for the Shield Building is based on Figure 1(b) ASCE Paper 3269, "Wind Forces on Structures," using the fastest wind speed for a 100-year period of recurrence. This results in a 100-mph basic wind at 30 feet above grade. In addition, this paper was used to determine shape factors, gust factors and variation of wind velocity with height.

5.2.2.3.5 Tornado Load

The structure was analyzed for tornado loading (not coincident with accident or earthquake) on the following basis:

1. The Shield Building is designed for an internal pressure of 3 psi acting outward and uniformly over the entire inside surface of the building, and
2. Lateral force on the Shield Building assumed as the force caused by a "funnel" of wind having a peripheral tangential velocity of 300 mph and a forward progression of 60 mph.

The design tornado that is assumed corresponds to a large funnel of arbitrary radius with a band of maximum velocity wind (300 mph) which is at least 150 feet wide and which extends from the ground surface to at least 200 feet.

The forces induced in the Shield Building by the external pressure of the above hypothetical tornado are considered in two cases. In the first case the structure is considered as an annular cantilever beam loaded with maximum wind pressure over the entire horizontally projected area of the structure. This case gives the maximum overturning moments, and membrane, shear and axial stresses. In the second case, it is assumed that the exterior pressure at any horizontal section varies from a maximum at the sub-wind centerline of the building to zero at each end of the diameter, which is perpendicular to this centerline. This pressure pattern is assumed to be the same at all elevations. This case gives the maximum ring moments and shears.

5.2.2.3.6 Uplift Due to Buoyant Forces

Uplift forces, which are created by the displacement of ground water by the structure, are accounted for in the design of the structure.

5.2.2.3.7 Earthquake Loads

Seismic loads were computed using the following:

- Operational Basis Earthquake seismic ground acceleration of 0.06g. (See Appendix A).
- Design Basis Earthquake seismic ground acceleration of 0.12g.

A vertical component of β of the horizontal ground acceleration is applied simultaneously with the horizontal acceleration. The plots of the seismic response spectra are shown in Appendix A. The classification of plant structures and equipment and the applicable damping factor are shown in Appendix B. The general procedure for seismic analysis is treated in Section 5.2.1.

5.2.2.3.8 External Missiles

The design tornado missile was chosen to be equivalent to an airborne 4" x 12" x 12' - 0" long wood plank traveling 300 mph. Other possible sources of tornado missiles were evaluated, as reported in Appendix B, but none were as destructive as the wood plank. The turbine missile is discussed in Appendix B.

5.2.2.3.9 Codes

5.2.2.3.10 Design Codes

Concrete structures are designed in accordance with the ACI Code 318-63 “Building Code Requirements for Reinforced Concrete.” Structural steel is designed in accordance with the “AISC Specification for Design, Fabrication and Erection of Structural Steel for Buildings.”

Welding is in accordance with the ASME Boiler and Pressure Vessel Code and AWS “Standard Code for Arc and Gas Welding in Building Construction.”

In addition to the above, the Shield Building is designed and constructed in accordance with applicable state and local building code requirements.

5.2.2.3.11 Material

Specifications and working drawings for materials and their installation are of such scope and detail that the desired integrity of the Shield Building was assured.

Basic specifications for these materials include the following:

1. Concrete

All concrete work is in accordance with ACI 318-63 “Building Code Requirements for Reinforced Concrete.”

The concrete was tested to assure a minimum compressive strength of 4000 psi at 28 days. Where the heat of hydration was not a factor, Portland cement Type I, conforming to Specification ASTM C150, was used. In other applications, Type II cement was used for its lower heat of hydration and slower rate of heat generation.

Testing of aggregates, cement, concrete mixes and sampling were undertaken by a qualified independent testing laboratory. Concrete samples were taken at a point nearest to placement as was possible.

Standards and specification for concrete materials, testing and construction methods are as follows:

- ACI 306 Recommended Practice for Winter Concreting
- ACI 347 Recommended Practice for Concrete Formwork
- ACI 605 Recommended Practice for Hot Weather Concreting
- ACI 614 Recommended Practice for Measuring, Mixing and Placing Concrete
- ASTM C31 Making and Curing Concrete Compression and Flexure Test Specimens in the Field
- ASTM C33 Specifications for Concrete Aggregates
- ASTM C39 Test for Compressive Strength of Molded Concrete Cylinders
- ASTM C87 Test for Effect of Organic Impurities in Fine Aggregate on Strength of Mortar
- ASTM C98 Specification for Ready-Mixed Concrete
- ASTM C143 Test for Slump of Concrete
- ASTM C150 Specification for Portland Cement
- ASTM C172 Method of Sampling Fresh Concrete
- ASTM C175 Specification for Air-Entraining Portland Cement
- ASTM C227 Test for Potential Alkali Reactivity of Cement Aggregate Combinations
- ASTM C231 Test for Air Content of Freshly Mixed Concrete by the Pressure Method
- ASTM C260 Specification for Air-Entraining Admixtures for Concrete
- ASTM C289 Test for Potential Reactivity of Aggregates

- ASTM C295 Petrographic Examination
- ASTM C350 Fly Ash for use as a Concrete Admixture

2. Reinforcement

All reinforcing is new billet steel and specified as follows:

Type & ASTM Spec No.	Grade Designation	Minimum Tensile-PSI	Minimum Yield-PSI	Minimum Elongation in 8" Spec
A-15	Intermediate	70,000	40,000	7-12%*
A-408	Intermediate	70,000	40,000	10%
A-432	--	90,000	60,000	7%
ASTM A305	Specification for Deformations of Deformed Steel bars for Concrete Reinforcement			
AWS D12.1	Recommended Practices for Welding Reinforcing Steel, Metal Inserts and Connections in Reinforced Concrete Construction			

* Varies with size of bar.

All reinforcing steel was shipped to the job site in bundles bearing a tag identifying its size, grade and code number keyed to heat numbers. This information was verified by certified mill test reports, which accompany each shipment of reinforcing steel.

All reinforcing steel bars were clearly identified with markings legibly rolled into the surface of each bar at the producer's plant showing the point of origin, size, designation and type of steel. High-strength steel bars were further identified with the minimum yield strength rolled into the surface of each bar.

All reinforcing steel was tested in accordance with ASTM Specifications. Tests included one tension and bend test per heat number or mill shipment; whichever is less, for each full size diameter bar.

The Quality Control Engineer followed construction to assure that steel bars as specified on the drawings were placed in their proper location and were of the designated size and strength.

The fabricator was required to furnish assurance that the steel as detailed, fabricated and shipped to the job site, bearing identification tags, was the same as that received from the mill.

Reinforcing steel bars were generally lap-spliced except where the design indicated that welded splices were structurally required, because the lap splice could not adequately meet the joint requirements within practical limits, or where welded splices were economically

advantageous. Welded splices were made by full penetration fusion butt-welding. Only A-15 reinforcing bars were used.

Whenever the integrity of structure was dependent upon welding, the weld splicing of A-15 bars was as follows:

1. A fully pre-qualified, written welding procedure was used
2. All welders were pre-qualified by tests
3. The chemistry of the bars to be welded was determined, and no bar with a carbon content greater than 0.35 percent was welded;
4. Welded splices in adjacent bars were staggered at least 24 inches
5. An extra ring of bars was added and was in addition to those required by the design; and
6. Not less than one in each twenty-five welds were tested radiographically. Each weld was inspected visually.

Shield Building wall reinforcement in each direction was governed by the structural requirements of tornado pressure loadings, wall temperature gradients, and missile loading. The structural requirements were in excess of the minimum percentages of reinforcement required by ACI-318. The design indicates that the minimum percentage of reinforcement in any case is not less than 0.4 percent.

5.2.2.3.12 Design Basis

The Shield Building completely encloses the Reactor Containment Vessel, the access openings, the equipment door, and that portion of all penetrations that are associated with Primary Containment. The design of the Shield Building provides for:

- Biological shielding,
- Controlled releases of the annulus atmosphere under accident conditions,
- Environmental protection of the Reactor Containment Vessel.

The Shield Building is primarily a shielding structure and as such it is not subjected to the internal pressure loads of a pressure-containment vessel. The structure therefore will not be subject to bi-axial tension and cracking due to pressure loads.

Since the Shield Building need not be designed for internal pressures, the reinforcement arrangements are based primarily on the need to withstand the more conventional structural loads from environmental effects.

The design criteria for the openings are:

1. To provide reinforcement around the openings to carry all loads by frame action. Because the Shield Building wall thickness is set to meet radiation shielding requirements, the thickness is generally in excess of that necessary for structural requirements; therefore, it was necessary to add additional bars around the perimeter of the opening to provide a reinforced concrete frame.
2. To provide for horizontal and vertical shearing forces acting in the plane of the opening, diagonal bars are provided forming an octagonal pattern of reinforcement around the perimeter of the opening.

The reinforced concrete and structural steel of the Shield Building and foundation were designed by the working stress method and are based on allowable stresses as set forth in Table 5.2-8.

Earthquake stresses were added linearly and directly to stresses caused by the DBA, snow, wind, dead loads, and the appropriate operating loads, to obtain the total stresses. These total stresses are within the maximum stress limits allowed by the applicable design criteria.

The summation of loads as stated in Conditions 1 and 2 of Table 5.2-8 provided the design basis for the Shield Building.

The summation of loads as stated in Condition 3 of Table 5.2-8 provided the design basis to maintain the integrity of the Shield Building so that a proper shutdown can be made during the ground motion having twice the intensity of the OBE. The design was reviewed to assure that resulting deflections or distortions did not prevent the proper functioning of the structure or piece of equipment and would not endanger adjacent structures or components.

Adequate reinforcing was placed in the concrete walls and dome to control cracking due to concrete shrinkage and temperature gradients.

The summation of loads as stated in Condition 4 of Table 5.2-8, provided the basis for a design review to assure that the Shield Building will suffer no loss of shielding or containment function due to a 300-mph design tornado.

The allowable stress values shown in Table 5.2-8 assure an elastic behavior of steel reinforcement during a DBE, thus minimizing the cracking of concrete and the impairment of leaktight integrity.

It is demonstrated by the stress criteria of Table 5.2-9 that during the maximum conditions of earthquake loading, the allowable stress values of Table 5.2-8 provide adequate margins within the elastic range of the material to assure the elastic behavior of the structure.

5.2.2.4 Concrete Cracks in Walls of Shield Building During Post-Earthquake Conditions

It is expected that only negligible amounts of inleakage could occur through cracks during post-earthquake conditions and accordingly, leakage due to an earthquake has been indicated as "negligible" in Table 5.2-7.

This is primarily a consequence of the combination of low shear stresses and the predominant effect of the dead load of the structure on the moment and shear stresses produced by earthquakes.

The maximum expected tangential shear stress on a horizontal cross-section of the Shield Building wall at the base of the structure during a DBE will be in the order of 90 psi. This shear stress will vary from zero to a maximum and will be distributed over the cross-section as outlined in Section 5.2.1.

The ratio of the structure deadload to the DBE moment uplift forces is in the order of 1:0.95 with a deadload stress of about 220-psi and a maximum moment uplift stress of 210-psi at the outer fibers of the cross-section where the shear stresses are zero.

The structure dead load acts as a pre-stress on the structural system and modifies the trajectories of tensile and compressive principal stresses from their characteristic curved lines to near straight orthogonal lines. For example, where the horizontal tangential shear stress is zero, the principal stress trajectory will be vertical and there will be no normal horizontal stress and associated cracking of concrete. This condition occurs in the walls at the extremities of a diameter normal to the neutral axis. A second limiting condition occurs where the horizontal tangential stress is a maximum (90-psi) at the extremities of a diameter coincident with the neutral axis. The vertical dead load stress (220-psi) will combine with the shear stress to generate a principal stress trajectory that will be oriented near vertical (approximately 20° to the vertical) with a normal principal tensile stress of 30-psi.

It is evident that earthquake conditions cannot produce sufficient horizontal forces to initiate and open vertical shear cracks to any appreciable degree. It is further evident that whatever cracks might form would only open and be exposed to inleakage for an average time length of only one-half of the duration of the earthquake. Since the elastic action of the structural system will alternately open and close stress cracks during earthquake stress cycling and finally remain closed after the earthquake has subsided. In addition, the stresses due to an earthquake will vary from a maximum at the base of the structure to zero at the very top, thereby further minimizing any leakage.

Finally, it can be concluded that earthquake forces will not provide any stresses of appreciable magnitudes that might contribute to any significant cracking and associated inleakage to the Shield Building Ventilation System.

5.2.2.4.1 Concrete Cracks and Leakage at the Springline of the Shield Building

The construction of the Shield Building roof consisted of two stages. First, a thin reinforced concrete dome roof was placed (about 5 inch thick). This dome was supported by the Reactor Containment Vessel shell dome by means of temporary construction shores. When this concrete dome had sufficient strength, the temporary shores were removed and the balance of roof concrete was placed.

The design and construction of the dome roof and walls at the springline are monolithic. The dome roof and walls are reinforced in a meridional direction for structural discontinuity moments and shears. The dome roof and walls are also reinforced in a circumferential direction to resist the hoop tensile stresses caused by springing of the dome roof at its point of support. The hoop reinforcing is proportioned in accordance with the discontinuity strains of the concrete shell near the springline to achieve an efficient use of the steel for crack control. The concrete dome roof is under continual compression due to dead load; therefore, cracking in the dome will be negligible.

It is estimated that the thrust of the dome roof will result in a maximum tensile stress of 120-psi in the hoop concrete section at the springline.

This stress is well within the limiting stress at which cracking in concrete can be expected to occur. However, in keeping with a conservative approach, the concrete is assumed to crack. The resulting inleakage through these cracks is shown in Table 5.2-7.

The wall and dome surfaces are provided with a minimum of 2 inch concrete cover over the reinforcing bars as required by ACI-318, to provide an adequate protection of reinforcement against freezing and thawing.

5.2.2.4.2 Foundation Slab and Support and Adjacent Building Construction

This foundation slab of the Containment System will have structural continuity with the foundation slab of the adjacent building.

The design provides for the relative static settlements that could occur between structures as dead load is placed on the slab during construction. The design assumes a zero relative settlement between structures during an earthquake. The design takes into account local foundation deformations during an earthquake due to the dynamic action of a rocking structure.

Structures adjacent and exterior to the Shield Building walls are designed with provision for the movements of the Shield Building during an earthquake. Walls originating in the Auxiliary Building that abut the Shield Building wall are isolated from the Shield Building by an adequate physical separation to prevent damage to either structure due to hammering during an earthquake.

Floors in the building adjacent to the Shield Building wall are not supported by the Shield Building wall but are cantilevered from columns. These floor slabs and beams are separated from the Shield Building wall by a flexible expansion joint that will permit independent building movements that might occur during an earthquake. Adequate physical separation between these floor slab terminal edges and the Shield Building walls are provided to prevent hammering.

The Shield Building and Auxiliary Building were dynamically analyzed for seismicity by John A. Blume & Associates (Reference 3 and Reference 4).

The results of these two analyses were correlated to determine the separation required between the two structures to assure that there would be no physical contact between the structures under earthquake conditions.

The separation space in walls and floors, which are a part of the leak barrier, is sealed by means of a flexible membrane attached to the concrete surfaces at the separation joint. This seal is of a type that will provide for movements that expand or contract the separation joint and for movements in the two other coordinate axes.

The Shield Building is monolithic with and integrally connected to the Auxiliary Building up to and including the mezzanine floor.

Flexible expansion joints have been provided between the Shield Building and adjacent Auxiliary Building structures above the mezzanine floor to provide for the relative lateral movements of the buildings during an earthquake.

A polyvinylchloride foam plastic joint filler is used to form the joint and a two-component polysulfide base sealant provides a watertight seal at the top of the joint. At the periphery of the roof, the “SV” zone and the Shield Building airlock concrete enclosures, an additional flexible non-plasticized chlorinated polyethyline reinforced with polyester mesh flashing was provided to assure continued leaktight integrity.

Prior to placement of the foundation slabs and exterior walls below grade, a 40-mil thick polyvinylchloride sheet was placed to act as a vapor barrier. This sheet acts in a dual role, preventing out-leakage of radioactive fluids from the plant, and at the same time preventing infiltration of ground water. The waterproofing membrane extends up to an elevation one foot below grade, which is approximately fifteen feet above the subsurface drainage system circumscribing the plant and twenty-two feet above high water lake level.

5.2.2.5 Analysis and Design for Missiles

The Shield Building is designed to withstand the tornado missile without loss of function. It is also designed to intercept the turbine missile and prevent it from damaging the Reactor Containment Vessel. Details of design analysis methods and criteria are given in Appendix B.

5.2.2.5.1 Design Analysis

The Shield Building was analyzed for individual cases of dead load, wind load, tornado, earthquake, and internal pressure loads.

The basis of the wind analysis is identified herein before in this Section.

The analysis for tornado winds considered the combined frontal pressure effects of both the 300 mph tangential and the 60 mph forward velocities acting on one-half of the Shield Building.

The seismic analysis of the Shield Building is given in Section 5.2.1.

The resulting stresses from individual loadings are combined as indicated in Table 5.2-8. Under loading condition "4" in Table 5.2-8 and Table 5.9-1, the maximum allowable concrete stress is indicated to be 0.85 f'_c.

In the actual design of the structures the maximum concrete stresses for condition "4" in the Shield Building never exceeded 0.53 f'_c and the actual stresses in the internal structures (Table 5.9-1) never exceeded 0.75 f'_c.

Therefore, with a maximum allowable concrete stress of 0.75 f'_c there is no lack of consistency in the safety margins for concrete and reinforcement steel. In the final design, a balanced design of concrete and steel reinforcement has been achieved.

The Shield Building is subjected to two distinct types of shear action. These are:

1. A radial shear normal to the building walls developed by discontinuity conditions and tornado internal pressure, and
2. A tangential and accompanying longitudinal shear taken on a radial plane through the walls induced by the flexural action of the structure under the effects of wind or earthquake loads (Reference 9).

The Shield Building was analyzed for effects of thermal stress.

The containment atmosphere during normal operation varies depending on the time of year. The average temperature at any one time can be as high as 115°F.

The steady-state temperature distribution in the Shield Building was determined, using the conservative assumption that the containment vessel and the annulus air are both at 120°F and the outside temperature is at -35°F. The calculated inside and outside wall temperatures are 99°F and -7°F, respectively.

The transient temperature distributions following a LOCA were calculated by superimposing on the steady-state temperature profile the effects of radiative and convective heat transfer to the wall from the annulus air and the containment vessel due to the energy release

inside the containment vessel. The maximum wall temperature is 117°F on the inside surface at 45.2 minutes following a LOCA and temperature changes at a depth beyond 10 inches are then negligible. The physical properties as well as the assumptions used to calculate the steady and transient temperature profiles are listed in Table 5.2-17.

The total concrete and steel stresses, including thermal stress due to the transient condition are also presented in the table, and these are below the allowable limits.

The calculation described is conservative in most respects, rather than realistic. The LOCA conditions are those associated with a double-ended break and calculations of outer containment wall temperatures following smaller breaks indicates very little difference in heat input to the annulus for these cases. The dominant thermal effect is the gradient resulting from initial temperatures on opposite sides of the wall and these temperatures have been chosen conservatively.

The Shield Building is a structure of conventional reinforced concrete design and construction. The Shield Building is designed to resist the internal pressure of 3-psi due to tornado loading, however this does not subject the structure to significant membrane forces that are ordinarily associated with pressure vessels. This low internal pressure minimizes the cracking of concrete and assures that concrete will function as a shear-carrying member. In addition, the structural discontinuity stresses are small since no significant pressure forces are present. Therefore, radial shears will be very low.

The shear provisions of the ACI Code are applicable to concrete members under the combined action of moments and applied axial compressive or tensile loads. These provisions are applicable to the transverse and tangential shear actions noted above.

The tangential and longitudinal shear distribution over the annular cross-section and at any point will be given by:

$$V_c = \frac{v}{\eta rt}\cos\theta$$

The tangential and longitudinal shear will vary from zero over a thickness of wall located at the extremes of a diameter normal to the neutral axis to a maximum on a wall thickness located on both extremes of a diameter coincident with the neutral axis, and is given by:

$$V_{max} = \frac{v}{\eta rt}$$

V = Total shear on the annular cross-section;

V_c = Unit tangential or longitudinal shear on the annual cross-section;

r = Mean radius of Shield Building wall;

t = Thickness of Shield Building wall;

θ = Polar angle measured on either side of the neutral axis locating the point at which the unit shear is to be determined;

V_{max} = Maximum tangential and longitudinal shear.

The maximum unit shear is limited in the design by the allowable values of the ACI 318-63 Code, Chapter 12.

5.2.2.5.2 Construction

The reinforced concrete vertical cylindrical wall of the Shield Building was constructed using the slip-form method as described in Chapter 5 of ACI Code 347-68.

Several minor changes were made to the fixed-form designs to facilitate slip forming. The changes effected the following:

1. Length of forms for block-outs, plate inserts and embedded items were shortened for easy placement in forms,
2. Spacing of form-supporting yokes required shorter lengths of reinforcement,
3. Concrete slump increased to 6 inches and maximum aggregate size was limited to ¾", and
4. Form to be tapered to avoid adhesion as form is raised.

5.2.2.6 Penetrations

The Shield Building penetrations for piping ducts and electrical cable are designed to withstand the normal environmental conditions which may prevail during plant operation and also to retain their integrity during and following postulated accidents.

The openings into the Shield Building, including personnel access openings, equipment access openings and penetrations for piping, duct, and electrical cable, are designed to provide containment which is as effective as the Shield Building and consistent with the Shield Building leak rate.

The Shield Building is provided with two access openings, one located adjacent to the maintenance air lock and the other adjacent to the personnel air lock.

Each access opening is provided with double-interlocked doors. A bolted, sealed door is provided at the equipment opening.

Pipe penetrations through the Shield Building are sealed with low-pressure flexible closures. The seals are of a rubber-impregnated canvas material or equal and seal the process line to the embedded sleeve in the Shield Building.

Flexibility of all cables is provided between the Shield Building and the Reactor Containment Vessel so that no damage can occur to the cables or structures due to differential movements between the two structures.

All electrical cables in the annulus are provided with support systems of various methods.

Generally the cables will be supported by tiers of cable tray, which are supported by structural members bearing on the external support concrete and tied back to the Shield Building. The cables will not be clamped to the cable tray system and will have slack allowed in them at both ends.

The large 5000-volt cables used for the reactor coolant pump are supported somewhat differently. A supporting framework is clamped to the penetration nozzle (part of the containment vessel) to provide a rigid support for the cables at the outboard end of the porcelain bushings. The cables will have approximately 18" of length available for slack prior to entering the embedded conduit in the Shield Building.

Annulus lighting system cables are all supported by clamps fastened only to the Shield Building.

All of the above systems are designed to accommodate differential movements between the two buildings without interaction.

Further discussion of penetrations is presented in Section 5.2.1.

Table 5.2-1

Allowable Stress Criteria - Reactor Containment Vessel Material: ASTM A516 Grade-70

Loading Conditions	Limits of Stress Intensity[a]
1. Dead loads plus operating loads plus DBA loads plus OBE Loads (0.06 g)	ASME Boiler and Pressure Vessel Code, Section III, Figure N-414
2. Dead loads plus operating loads plus DBA loads plus DBE Loads (0.12 g)	Safe shutdown of plant can be achieved (a) $P_m \leq 1.16\ S_m$ (b) $P_L + P_b \leq 1.16\ (1.5\ S_m)$ (c) $P_L + P_b + Q \leq 3.0\ S_m$
3. Dead loads plus operating loads plus pipe rupture forces (faulted condition) plus (operational basis or DBE Loads)	See Section 5.2.1, Pipe Reaction and Rupture Forces, and Table B.7-2 and B.7-5, Appendix B

P_m - Primary general membrane stress intensity
P_L - Primary local membrane stress intensity
P_b - Primary bending stress intensity
Q - Secondary stress intensity
S_m - Allowable stress intensity value

a. Refer to Table N-414, ASME Boiler and Pressure Vessel Code, Section III

Table 5.2-2
D.G. O'Brien Electrical Penetration Tests

		Prototype						Production					
Test	Mfrs. Test Procedures	MVP	LVP	I&C	CRDP	NIS	RM	MVP	LVP	I&C	CRDP	NIS	RM
1. Dye Penetrant	TP-DP-102	X	X	X	X	X	X	X	X	X	X	X	X
2. Continuity	TP-CR-105	X	X	X	X	X	X	X	X	X	X	X	X
3. Seismic	TP-EV-100	X	X	X	X	X	X						
4. Helium	TP-LK-109	X	X	X	X	X	X						
5. Environmental	TP-EV-102	X		X		X							
6. Continuous Current	TP-CR-107	X	X		X								
7. Interrupting Fault	TP-CR-107 Supplement	X	X										
8. Insul. Resistance	TP-IN-108	X	X	X	X	X	X	X	X	X	X	X	X
9. Diel. Strength	TP-HP-108	X	X	X	X	X	X	X	X	X	X	X	X
10. Helium Leakage	TP-LK-109	X	X	X	X	X		X	X	X	X	X	X
11. Continuity	TP-CR-105	X	X	X	X	X							
12. Steam Pressure	TP-EV-101	X	X	X	X		X						
13. Insul. Resistance	TP-IN-108	X	X	X	X	X	X						
14. Diel. Strength	TP-HP-108	X	X	X	X	X	X						
15. RF Test						X	X						

Table 5.2-3
Reactor Containment Vessel Penetrations

Penetration Number	Service	System*	Flow Diagr. Fig. No.	Quantity of Each	Size Line	Inside Type**	Valve No.	Operating Position	Outside Type**	Valve No.	Operating Position	(Note 1) Operating Function	Post-LOCA Function	Post-LOCA Position	*** Flow	>200F: Hot <200F: Cold	Penetration Class (Note 2)
1	Pressurizer Relief Tank Sample to Gas Analyzer	RCS	4.2-1	1	3/8"	None	-	-	RSV-T+ RSV-T	MG(R)512 MG(R)513	Closed Closed	Sample P.R. Tank	Cont. Iso.	Closed	G-0	Cold	2
2	Pressurizer Relief Tank Nitrogen Supply	RCS	4.2-1	1	3/4"	Check	NG304	-	RSV-T	NG302	Open	Blanket P.R. Tank w/N_2	Cont. Iso.	Closed	G-I	Cold	3
3	Instrumentation Instrumentation	- -	- -	1 1	3/8" 3/8"	(1) None	- -	- -	CS (1)			None None	Cont. Iso. Cont. Iso.	Closed Closed		Cold Cold	8 8
4	Primary System Vent Header	WDS	11.1-1	1	1"	-	-	-	RSV-T + RSV-T	MG(R)509 MG(R)510	Open Open	Vent RC Drain Tank	Cont. Iso.	Closed	G-0	Cold	2
5	Reactor Coolant Drain Tank Pump Discharge	WDS	11.1-1	1	3"				RSV-T + RSV-T	RC507 RC508	Closed Closed	Drain RC Drain Tank	Cont. Iso.	Closed	W-0	Cold	2
6E & 6W	Steam	MS	10.2-1	1	30"	(2)	-	-	Stop	MS1A & B MS2A & B	Open Closed	Isolate Steam to Turbine	Stm. Gen. Iso.	Closed	G-0	Hot	4A
7E & 7W	Feedwater	FW	10.2-3	1	16"	Check (2)	FW13A FW13B	- -	RSV-T -	FW12A FW12B	Open Open	Supply Water to Steam Generator	Stm. Gen. Iso.	Closed	W-I	Hot	4A
8N & 8S	Steam Generator Blowdown	MS	10.2-1	1	2"	RSV-T Check RSV-T Check	BT2A BT2A-1 BT2B BT2B-1	Open Open	RSV-T -	BT3A BT3B	Open Open	Interm. Stm. Gen. Blowdown	Stm. Gen. Iso.	Closed	W-0	Hot	4A
9	Residual Heat Removal Loop Out	ACS	9.3-1	1	8"	RSV RSV	RHR2A & B RHR1A & B	Closed Closed	MV	RHR4A & 4B	Open	Remove Residual Heat During Shutdown	Inside - RC Loop Iso.	Inside - Closed	W-0	Hot	6
10	Residual Heat Removal Loop In	ACS/SIS	9.3-1	1	8" 10"	Check RSV RSV RSV	RHR44 LD60 RHR11 S1302A	Closed Closed Open				Residual Heat Removal Return to RCS	Safety Injection Long-Term Post-LOCA Cooling	Inside – Closed Outside - Open	W-I	Hot	6

[1]Instrument diaphragm provides barrier.
[2]Tube barrier and pressurized system.
[3]These lines are also connected to an additional pair of valves, ICS-201 and ICS-202, which receive a containment isolation signal but do not meet the containment isolation criteriain Section 5.3.2. They are therefore not containment isolation valves.

Table 5.2-3
Reactor Containment Vessel Penetrations

Penetration Number	Service	System*	Flow Diagr. Fig. No.	Quantity of Each	Size Line	Inside Type**	Valve No.	Operating Position	Outside Type**	Valve No.	Operating Position	(Note 1) Operating Function	Post-LOCA Function	Post-LOCA Position	*** Flow	>200F: Hot <200F: Cold	Penetration Class (Note 2)
11	Letdown Line	CVCS	9.2-1	1	2"	RSV-T	LD4A LD4B LD4C	Closed Open Closed	RSV-T	LD6	Open	Letdown to Purif. Syst.	Cont. Iso.	Closed	W-0	Hot	1
12	Charging Line	CVCS	9.2-1	1	2"	Check	CVC10	-	RSV+ MV CS	CVC7 CVC9	Open Closed	Make-up to Reactor Coolant System	Continues to Make-up	Open	W-I	Cold	3
13N & 13E	R.C. Pump Seal Water Supply	CVCS	9.2-1	1	2"	Check & Check	CVC205A & B & 206A & B	-	MV + CS	CVC204B & A	Open	Supply Seal Water to R.C. Pumps	Continuous Seal Water Supply to R.C. Pumps	Open	W-I	Cold	3
14	R.C. Pump Seal Water Return	CVCS	9.2-1	1	3"	RSV-T Check	CVC211 CVC211-2	Open -	RSV-T	CVC212	Open	Seal Water Return	Cont. Iso.	Closed	W-0	Cold	1
15	Pressurizer Steam Sample	SS	9.4-1	1	3/8"	RSV	RC402	Closed	RSV-T	RC403	Open	To Sample Pressurizer	Cont. Iso.	Closed	G-0	Hot	1
15	Pressurizer Liquid Sample	SS	9.4-1	1	3/8"	RSV	RC412	Closed	RSV-T	RC413	Open	To Sample Pressurizer	Cont. Iso.	Closed	W-0	Hot	1
15	Loop B Hot Leg Sample	SS	9.4-1	1	3/8"	RSV	RC422	Closed	RSV-T	RC423	Open	To Sample RCS	Cont. Iso.	Closed	W-0	Hot	1
18	Fuel Transfer Tube	FTS	None	1	20"	Blind Flange	-	Closed	-		-	Fuel Transfer	Cont. Iso.	Closed	W	Cold	5
19	Service Air	AS	None	1	2"	Double O-ring Blind Flange	--	Closed	--	--	--	Supply Air for Hose Conns.	Cont. Iso.	Closed	G-I	Cold	5
20	Instrument Air	AS	None	1	1"	Check	IA103	-	Check	IA102	Open	Supply Air for Instruments	Same as Operating Function	Open	G-I	Cold	3
21	Reactor Coolant Drain Tank Gas Analyzer	WDS	11.1-1	1	3/8"				RSV-T RSV-T	MG(R)503 MG(R)504	Closed Closed	Sample R.C. Drain Tank	Cont. Iso.	Closed	G-0	Cold	2

[1]Instrument Diaphragm provides barrier
[2]Tube barrier and pressurized system
[3]These lines are also connected to an additional pair of valves, ICS-201 and ICS-202, which receive a containment isolation signal but do not meet the containment isolation criteriain Section 5.3.2. They are therefore not containment isolation valves.

Table 5.2-3
Reactor Containment Vessel Penetrations

Penetration Number	Service	System*	Flow Diagr. Fig. No.	Quantity of Each	Size Line	Inside Type**	Valve No.	Operating Position	Outside Type**	Valve No.	Operating Position	(Note 1) Operating Function	Post-LOCA Function	Post-LOCA Position	*** Flow	>200F: Hot <200F: Cold	Penetration Class (Note 2)
22	Containment Air Sample In	RMS	5.4-1	1	1"	Check	AS33	-	RSV-T	AS32	Open	Sample Containment Atmosphere	Cont. Iso.	Closed	G-I	Cold	3
23	Containment Air Sample Out	RMS	5.4-1	1	1"	None	-	-	RSV-T RSV-T	AS1 AS2	Open Open	Sample Containment Atmosphere	Cont. Iso.	Closed	G-0	Cold	2
24	Service Water	SW	9.6-2	1	2"	Check	SW6011	-	MV	SW6010	Closed	Supply Water for Hose Conns.	Cont. Iso.	Closed	W-I	Cold	5
25N	Containment Purge Exhaust Duct	VS	5.4-1	1	36"	RSV-TT	RBV3	Closed	RSV-TT	RBV4	Closed	Open Only During Containment Purge	Cont. Iso.	Closed	G-0	Cold	7
25S	Containment Vent and Purge Supply Duct	VS	5.4-1	1	36"	RSV-TT	RBV2	Closed	RSV-TT	RBV1	Closed	Open Only during Containment Purge	Cont. Iso.	Closed	G-I	Cold	7
26	Containment Sump “A” Discharge	WDS	11.1-1	1	3"				RSV-T RSV-T	MD(R)134 MD(R)135	Closed Closed	Discharge Misc. Containment Drains	Cont. Iso.	Closed	W-0	Cold	2
27N(X1)	Instrumentation	RBV	5.4-1	1	3/8"	None			(1)			Containment Pressure Measurement	Cont. Iso.		G	Cold	8
27N(X2)	Instrumentation	RBV	5.4-1	1	3/8"	None			(1)				Cont. Iso.		G	Cold	8
27N(SW)	Instrumentation	RBV	5.4-1	1	3/8"	None			(2)				Cont. Iso.		G	Cold	8
27NE(X1)	Instrumentation	RBV	5.4-1	1	3/8"	None			(1)			Containment Pressure Measurement	Cont. Iso.		G	Cold	8
27NE(X2)	Instrumentation	RBV	5.4-1	1	3/8"	None			(1)				Cont. Iso.		G	Cold	8
27NE(X3)	Instrumentation	RBV	5.4-1	1	3/8"	None			(2)				Cont. Iso.		G	Cold	8
27E	Steam Generator 1A Blowdown Sample	SS	10.2-9	1	3/8"	RSV-T	BT31A	Open	RSV-T	BT32A	Open	To Analytical Instrument Panel	Stm. Gen. Iso.	Closed	W-0	Hot	4A

[1]Instrument Diaphragm provides barrier
[2]Tube barrier and pressurized system
[3]These lines are also connected to an additional pair of valves, ICS-201 and ICS-202, which receive a containment isolation signal but do not meet the containment isolation criteriain Section 5.3.2. They are therefore not containment isolation valves.

Table 5.2-3
Reactor Containment Vessel Penetrations

Penetration Number	Service	System*	Flow Diagr. Fig. No.	Quantity of Each	Size Line	Inside Type**	Valve No.	Operating Position	Outside Type**	Valve No.	Operating Position	(Note 1) Operating Function	Post-LOCA Function	Post-LOCA Position	*** Flow	>200F: Hot <200F: Cold	Penetration Class (Note 2)
27E	Steam Generator 1B Blowdown Sample	SS	10.2-9	1	3/8"	RSV-T	BT31B	Open	RSV-T	BT32B	Open	To Analytical Instrument Panel	Stm. Gen. Iso.	Closed	W-0	Hot	4A
27EN	Instrumentation				3/8"	None	-	-	Blind Flange			-	-	-	G-0	Cold	8
27EN-X	Instrumentation				3/8"	None	-	-	(1)			-	-		G-0	Cold	8
28N	Cold Leg Safety Injection	SIS	6.2-1	1	3"	Check Check	SI13A&B SI12A&B	-	RSV	SI9A	Open	None	Injection Path Into Cold Leg		W-I	Cold	6
28E	Reactor Vessel Safety Injection	SIS	6.2-1	1	3"	RSV Check	SI15A&B SI16A&B	Closed -	RSV	SI9B	Open	None	Injection Path to Reactor Vessel (Optional)		W-I	Cold	6
29N & 29E	Internal Containment Spray	ICS	6.4-1	1	6"	Check	ICS9A & B	Closed	Check	ICS8A & B (Note 3)	Closed	None	Cool Containment Atmosphere Post-LOCA/ Cont. Iso.	Open/Closed	W-I	Cold	3C
30E & 30W	Containment Sump Recirc. Lines	SIS	6.2-1	1	12"	None	-	-	RSV+ RSV	SI350A & B SI351A & B	Closed Closed	None	Long-Term Post-LOCA Cooling to RHR Pumps	Closed Immediately After Accident	W-0	Cold	6
31	Nitrogen to Accumulator	SIS	6.2-1	1	1"	Check	NG107-1		RSV-T	NG107	Open	Supplied Nitrogen Blanket As Required	Cont. Iso.	Closed	G-I	Cold	3
32E	Component Cooling Water to Reactor Coolant Pump 1B (Closed System)	ACS	9.3-3	1	4"	CS	-	-	RSV	CC601B	Open	Supplied Cooling to Barrier Seals and Bearings	Same as Operating Function	Open	W-I	Cold	6

[1]Instrument Diaphragm provides barrier
[2]Tube barrier and pressurized system
[3]These lines are also connected to an additional pair of valves, ICS-201 and ICS-202, which receive a containment isolation signal but do not meet the containment isolation criteriain Section 5.3.2. They are therefore not containment isolation valves.

Table 5.2-3
Reactor Containment Vessel Penetrations

Penetration Number	Service	System*	Flow Diagr. Fig. No.	Quantity of Each	Size Line	Inside Type**	Valve No.	Operating Position	Outside Type**	Valve No.	Operating Position	(Note 1) Operating Function	Post-LOCA Function	Post-LOCA Position	*** Flow	>200F: Hot <200F: Cold	Penetration Class (Note 2)
32N	Component Cooling Water to Reactor Coolant Pump 1A (Closed System)	ACS	9.3-3	1	4"	CS	-	-	RSV	CC601A	Open	Supplied Cooling to Barrier Seals and Bearings	Same as Operating Function	Open	W-I	Cold	6
33E	Component Cooling Water from Reactor Coolant Pump IB (Closed System)	ACS	9.3-3	1	4"	CS	-	-	RSV	CC612B	Open	Removes Heat From Thermal Barrier and Motor Bearing Oil Coolers	Same as Operating Function	Open	W-0	Cold	6
33N	Component Cooling Water from Reactor Coolant Pump IA (Closed System)	ACS	9.3-3	1	4"	CS	-	-	RSV	CC612A	Open	Removes Heat From Thermal Barrier and Motor Bearing Oil Coolers	Same as Operating Function	Open	W-0	Cold	6
34 Elec. A	Normal Power and Train >B= Power	CCI	-	12	-	-	-	-	MV	CPT-34A	Closed	Local Leak Rate Testing	Cont. Iso.	Closed	-	Cold	-
34 Elec. B	Normal Power and Train >B=Power, Control and Instrumentation, and AWhite≅ Reactor Protection Channel	CCI	-	12	-	-	-	-	MV	CPT-34B	Closed	Local Leak Rate Testing	Cont. Iso.	Closed	-	Cold	-

[1]Instrument Diaphragm provides barrier
[2]Tube barrier and pressurized system
[3]These lines are also connected to an additional pair of valves, ICS-201 and ICS-202, which receive a containment isolation signal but do not meet the containment isolation criteriain Section 5.3.2. They are therefore not containment isolation valves.

Table 5.2-3
Reactor Containment Vessel Penetrations

Penetration Number	Service	System*	Flow Diagr. Fig. No.	Quantity of Each	Size Line	Inside Type**	Valve No.	Operating Position	Outside Type**	Valve No.	Operating Position	(Note 1) Operating Function	Post-LOCA Function	Post-LOCA Position	*** Flow	>200F: Hot <200F: Cold	Penetration Class (Note 2)
34 Elec. C	Normal Instrumentation, Train >B= Instrumentation, ABlue≅ Reactor Protection Channel	CCI	-	12	-	-	-	-	MV	CPT-34C	Closed	Local Leak Rate Testing	Cont. Iso.	Closed	-	Cold	-
34 Elec. D	Normal Instrumentation, Train >A= Instrumentation, ARed≅ Reactor Protection Channel	CCI	-	12	-	-	-	-	MV	CPT-34D	Closed	Local Leak Rate Testing	Cont. Iso.	Closed	-	Cold	-
34 Elec. E	Normal Control, Train >A= Control and Instrumentation, AYellow≅ Reactor Protection Channel	CCI	-	12	-	-	-	-	MV	CPT-34E	Closed	Local Leak Rate Testing	Cont. Iso.	Closed	-	Cold	-
34 Elec. F	Normal Power and Train AA≅ Power	CCI	-	12	-	-	-	-	MV	CPT-34F	Closed	Local Leak Rate Testing	Cont. Iso.	Closed	-	Cold	-
35	Safety Injection and Accumulator Test Line	SIS	6.2-1	1	3/4"	RSV RSV MV MV	SI201A&B SI202A&B SI203A-1 SI203B-1	Closed Closed Open Closed	MV	SI204	Closed	Test of SI System	Cont. Iso.	Closed	W-0	Cold	5
36N (X2)	Instrumentation	RBV	5.4-1	1	3/8"	None	-	-	(1)			Measures Containment	Same as Operating	-	-		8
36N (SW)	Instrumentation	RBV	5.4-1	1	3/8"	None	-	-	(2)			Pressure	Function				8

[1] Instrument Diaphragm provides barrier
[2] Tube barrier and pressurized system
[3] These lines are also connected to an additional pair of valves, ICS-201 and ICS-202, which receive a containment isolation signal but do not meet the containment isolation criteriain Section 5.3.2. They are therefore not containment isolation valves.

Table 5.2-3
Reactor Containment Vessel Penetrations

Penetration Number	Service	System*	Flow Diagr. Fig. No.	Quantity of Each	Size Line	Inside Type**	Valve No.	Operating Position	Outside Type**	Valve No.	Operating Position	(Note 1) Operating Function	Post-LOCA Function	Post-LOCA Position	*** Flow	>200F: Hot <200F: Cold	Penetration Class (Note 2)
36S	Hydrogen Control System Sample Line	RBV	14.3-48	1	3/8" -2"	RSV-T	LOCA2A	Closed	RSV RSV RSV	LOCA100A LOCA10A LOCA3A	Closed Closed Closed	None	Cont. Atmos. Sampling	Open Inter-mittently		Cold	6
36W	Hydrogen Control System Sample Line	RBV	14.3-48	1	3/8" -2"	RSV-T	LOCA2B	Open	RSV-1 RSV RSV	LOCA100B LOCA10B LOCA3B	Open Closed Closed	Periodically Vent Containment To Reduce Pressure	Cont. Atmos. Sampling	Open Inter-mittently		Cold	6
36SE	Hydrogen Control Pressurization	RBV	14.3-48	1	2"	Check RSV	SA7004A LOCA201 A	- Closed	RSV	SA7003A	Closed	None	Air Supply	Open Inter-mittently		Cold	6
36NW	Hydrogen Control Pressurization	RBV	14.3-48	1	2"	Check RSV	SA7004B LOCA201B	- Open	RSV-TT	SA7003B	Open	Periodically Vent Containment To Reduce Pressure	Air Supply	Open Inter-mittently		Cold	6
37NW	Service Water to Containment Fan Coil Unit 1A	SW	9.6-2d	1	8"	CS	--	-	MV	SW900A	Open	Provide Cooling of Containment Atmosphere	Provide Cooling of Containment Atmosphere	Open	W-I	Cold	6
37NE	Service Water to Containment Fan Coil Unit 1B	SW	9.6-2d	1	8"	CS	--	-	MV	SW900B	Open	Provide Cooling of Containment Atmosphere	Provide Cooling of Containment Atmosphere	Open	W-I	Cold	6
37ES	Service Water to Containment Fan Coil Unit 1C	SW	9.6-2d	1	8"	CS	--	-	MV	SW900C	Open	Provide Cooling of Containment Atmosphere	Provide Cooling of Containment Atmosphere	Open	W-I	Cold	6

[1]Instrument Diaphragm provides barrier
[2]Tube barrier and pressurized system
[3]These lines are also connected to an additional pair of valves, ICS-201 and ICS-202, which receive a containment isolation signal but do not meet the containment isolation criteriain Section 5.3.2. They are therefore not containment isolation valves.

Table 5.2-3
Reactor Containment Vessel Penetrations

Penetration Number	Service	System*	Flow Diagr. Fig. No.	Quantity of Each	Size Line	Inside Type**	Valve No.	Operating Position	Outside Type**	Valve No.	Operating Position	(Note 1) Operating Function	Post-LOCA Function	Post-LOCA Position	*** Flow	>200F: Hot <200F: Cold	Penetration Class (Note 2)
37EN	Service Water to Containment Fan Coil Unit 1D	SW	9.6-2d	1	8"	CS	--	-	MV	SW900D	Open	Provide Cooling of Containment Atmosphere	Provide Cooling of Containment Atmosphere	Open	W-I	Cold	6
38NW	Service Water from Containment Fan Coil Unit 1A	SW	9.6-2d	1	8"	None	-	-	RSV	SW903A	Open	Provide Cooling of Containment Atmosphere	Provide Cooling of Containment Atmosphere	Open	W-O	Cold	6
38NE	Service Water from Containment Fan Coil Unit 1B	SW	9.6-2d	1	8"	None	-	-	RSV	SW903B	Open	Provide Cooling of Containment Atmosphere	Provide Cooling of Containment Atmosphere	Open	W-O	Cold	6
38ES	Service Water from Containment Fan Coil Unit 1C	SW	9.6-2d	1	8"	None	-	-	RSV	SW903C	Open	Provide Cooling of Containment Atmosphere	Provide Cooling of Containment Atmosphere	Open	W-O	Cold	6
38EN	Service Water from Containment Fan Coil Unit 1D	SW	9.6-2d	1	8"	None	-	-	RSV	SW903D	Open	Provide Cooling of Containment Atmosphere	Provide Cooling of Containment Atmosphere	Open	W-O	Cold	6
39	Component Cooling Water to Excess Letdown HX	ACS	9.3-3	1	3"	CS	-	-	RSV	CC600	Open	Cools Excess Letdown HX	Cont. Iso.	Open	W-I	Cold	4
40	Component Cooling Water from Excess Letdown HX	ACS	9.3-3	1	3"	CS	-	-	RSV-T	CC653	Open	Excess Letdown HX Return	Cont. Iso.	Closed	W-O	Cold	4

[1]Instrument Diaphragm provides barrier
[2]Tube barrier and pressurized system
[3]These lines are also connected to an additional pair of valves, ICS-201 and ICS-202, which receive a containment isolation signal but do not meet the containment isolation criteriain Section 5.3.2. They are therefore not containment isolation valves.

Table 5.2-3
Reactor Containment Vessel Penetrations

Penetration Number	Service	System*	Flow Diagr. Fig. No.	Quantity of Each	Size Line	Inside Type**	Valve No.	Operating Position	Outside Type**	Valve No.	Operating Position	(Note 1) Operating Function	Post-LOCA Function	Post-LOCA Position	*** Flow	>200F: Hot <200F: Cold	Penetration Class (Note 2)
41E	Containment Vacuum Breaker	RBV	5.4-1	1	18"	None	-	-	RSV-T Check	VB10B VB11B	Closed	Maintain Containment Above 0.8 psig Vacuum	Cont. Iso.	Closed	G-I	Cold	7B
41S/S	Containment Vacuum Breader	RBV	5.4-1	1	18"	None	-	-	RSV-T Check	VB10A VB11A	Closed	Maintain Containment Above 0.8 psig Vacuum	Cont. Iso.	Closed	G-I	Cold	7B
42N	Containment Vessel Pressurization Test	RBV	11-1.4	1	14"	Double O-ring Blind Flange	-	-		-	-	Pressure Test Containment Cable Penetration During Refueling	Cont. Iso.		G-I	Cold	7
43N	Refueling Cable Penetration	RBV	11.1-4	1	18"	Double O-ring Blind Flange	-	-	-	-	-	Cable Penetration During Refueling	Cont. Iso.		-	Cold	7
44R	Deaerated Drain Tank Vent	WDS	-	1	2"	RSV-T	WG311	Closed	RSV-T	WG310	Closed	Deaerated Drain Tank Vent	Cont. Iso.	Closed	G-I	Cold	5
44L	Volume Control Tank Vent	CVCS	-	1	2"	Check	CVC55	-	RSV-T	CVC54	Closed	Volume Control Tank Vent	Cont. Iso.	Closed	G-I	Cold	5
45	Reactor Make-up Water to Pressurizer Relief Tank	RCS	4.2-1	1	2"	Check	MU1011		RSV-T	MU1010-1	Closed	Provide Cooling Water to P. R. Tank	Cont. Iso.	Closed	W-I	Cold	3

[1] Instrument Diaphragm provides barrier
[2] Tube barrier and pressurized system
[3] These lines are also connected to an additional pair of valves, ICS-201 and ICS-202, which receive a containment isolation signal but do not meet the containment isolation criteriain Section 5.3.2. They are therefore not containment isolation valves.

Table 5.2-3
Reactor Containment Vessel Penetrations

Penetration Number	Service	System*	Flow Diagr. Fig. No.	Quantity of Each	Size Line	Inside Type**	Valve No.	Operating Position	Outside Type**	Valve No.	Operating Position	(Note 1) Operating Function	Post-LOCA Function	Post-LOCA Position	*** Flow	>200F: Hot <200F: Cold	Penetration Class (Note 2)
46E	Auxiliary Feedwater	FW	10.2-3	1	3"	Check	AFW4B	-	Check	AFW1B AFW1C	-	Supplies Aux. Feedwater to Steam Generator 1B	Injects Water Into Steam Generator	Open	W-I	Cold	6
46W	Auxiliary Feedwater	FW	10.2-3	1	3"	Check	AFW4A	-	Check	AFW1A AFW1C	-	Supplies Aux. Feedwater to Steam Generator 1A	Injects Water Into Steam Generator	Open	W-I	Cold	6
48	Low Head Safety Injection to Reactor Vessel	SIS	6.2-1	1	6"	RSV Check	SI302B SI303B	Open	MV RSV	RHR9B RHR8B	Open Open	None	Injects Water Into Reactor Vessel (Optional)	Open	W-I	Cold	6
49	Equipment Door			1		Double Gasketed							Cont. Iso.	Closed	W-I	Cold	7
49E	Deaerated Drain Tank Emerg. Pumps Discharge	WDS	-	1	3"	Check	MD(R)324	-	RSV-T RSV-T	MD(R)323A MD(R)323B	Closed Closed	Deaerated Drains to Containment Sump “A”	Cont. Iso.	Closed	G-I	Cold	5
50	Personnel Airlocks			1		Double Gasketed Door		Closed	Double Gasketed Door	-	Closed	-	-	-	-	-	5

[1]Instrument Diaphragm provides barrier
[2]Tube barrier and pressurized system
[3]These lines are also connected to an additional pair of valves, ICS-201 and ICS-202, which receive a containment isolation signal but do not meet the containment isolation criteriain Section 5.3.2. They are therefore not containment isolation valves.

Table 5.2-3
Reactor Containment Vessel Penetrations
Branch Lines

Penetration Number	Type**	Valve No.	Operating Function (Note 1)	Post-LOCA Position	*** Flow	Size Line
6E + 6W	MV	MS40B MS40A	Drain to Trap	Open	W-O	1"
6E + 6W	RV	SD1A1 through 1A5	Vent to Atmosphere Through Relief Valves	Closed	G-O	6"
		SD1B1 through 1B5				
6E + 6W	RV	SD3A SD3B	Vent to Atmosphere Through Controlled Relief	Closed	G-O	6"
38NE	RSV-T	SW904B	Containment Temp. Control	Closed	W-O	8"
38EN	RSV-T	SW904D	Containment Temp. Control	Closed	W-O	8"
42N	MV	CPT60	Vent to Annulus	Locked Open	G-O	3/4"
43N	MV	CPT80	Vent to Annulus	Open	G-O	1"

Table 5.2-3
Reactor Containment Vessel Penetrations
Abbreviations and Notes

***SYSTEM**

RCS- Reactor Coolant System
WDS- Waste Disposal System
ACS- Auxiliary Coolant System
SIS- Safety Injection System
CVCS- Chemical and Volume Control System
SS- Sampling System
FTS- Fuel Transfer System
VS- Ventilation System
RMS- Radiation Monitoring System
RBV- Reactor Building Ventilation System
MS- Main Steam System
FW- Feedwater System
AS- Station and Instrument Air System
SW- Service Water System
ICS- Internal Containment Spray System
MDS- Miscellaneous Drains, Sumps
N_2- Nitrogen

****VALVES**

CS- Closed System
RSV- Remotely Operated Stop Valve
MV- Manual Valve
GSV- Globe Stop Check Valve
RV- Relief Valve
RSV+RSV- Remotely Operated Stop Valves in Series
VRV- Vacuum Relief Valve
-T- Tripped Closed on Safety Injection Signal
-TT- Tripped Closed on Safety Injection Signal or High Containment Radiation

***FLOW

Direction = I = In Fluid = G = Gas
O = Out W = Water

Note 1: OPERATING FUNCTION

Denotes the position of the valve during normal reactor operation. Instrumentation and control circuits associated with isolation valves RSV-T and RSV-TT shall fail safe (initiate closure) upon loss of voltage and/or control air or have non-interruptible
power supplies (in the case of motor operated valves) which would ensure isolation capability.

Note 2: PENETRATION CLASS

Number classifications are defined in Section 5.3.2. Letter designation is defined as follows:

1. The isolation system for these penetrations are subject to special consideration on leakage and testing requirements because their principal function is related to rupture of steam generator secondary side systems and not loss of coolant.
2. The automatically operated relief valve actuates from containment vacuum and qualifies as an isolation valve because increasing pressure causes the valve to stay in the closed position.
3. The design basis LOCA may not be the most limiting accident for these penetrations. The system may or may not be in operation post-accident. The more conservative penetration class is specified.

Note 3:

To trace drawing number references on flow diagrams to other flow diagrams in this USAR.

See Table 1.0-1.

Table 5.2-4
Zone SV Boundary Penetrations Removable Slabs and Steel Plate Covers

Gen. Arrgt. Fig. No. (Slabs & Covers)	Equipment Access	Gen. Arrgt. Fig. No. (Equipment)
1.2-6	Residual Heat Exchangers 1A & 1B	1.2-4
1.2-6	Letdown Heat Exchanger	1.2-4
1.2-6	Seal Water Heat Exchanger	1.2-4
1.2-6	Demineralizers and Resin Fill Conns.	1.2-4
1.2-6	Spent Fuel Pool Filters	1.2-10
1.2-6	Spent Fuel Pool Demin. Post-Filter	1.2-10
1.2-6	Refueling Water Purification Pre-Filter	1.2-10
1.2-6	General Equipment Access	1.2-4

Table 5.2-5
Zone SV Boundary Penetrations Doors

Door No.	Gen. Arrgt. Fig. No.	Floor Elevation	Access Control
9-	1.2-2	586'-0"	Locked Key Card
8	1.2-2	586'-0"	Not Locked
12 & 196	1.2-2	586'-0"	Elec. Interlock
13	1.2-2	586'-0"	Not Locked
63 & 197	1.2-4	606'-0"	Elect. Interlock & Key Card
80	1.2-4	606'-0"	Locked
52	1.2-4	606'-0"	Not Locked
55	1.2-4	606'-0"	Locked Key Card
162	1.2-6	626'-0"	Locked
82	1.2-10	616'-0"	Not Locked
140	1.2-10	622'-3"	Not Locked
134 & 187	1.2-6	633'-6"	Elect. Interlock
144 & 199	1.2-7	642'-3"	Elect. Interlock
152	1.2-7	642'-3"	Locked
155	1.2-7	642'-3"	Locked
156	1.2-7	657'-6"	Locked
163	1.2-7	657'-6"	Locked
441 & 442	1.2-2	586'-0"	Elect. Interlock
121	1.2-6	633'-6"	Not Locked
146	1.2-7	642'-3"	Not Locked

Table 5.2-6
Zone SV Boundary Penetrations & Zone SV Boundary Dampers

Damper Number	Service	Flow Diagram Figure No.	Operating Function	Position	Accident Function	Position
CD-34004 (ASV 65)	Exhaust Duct - Toilet 139	9.6-7	None	Open	Zone SV Isolation	Closed
CD-34016 (ASV 30)	Exhaust Duct - Spent Fuel Pool Area	9.6-5	None	Open	Zone SV Isolation	Closed
CD-34017 (ASV 81)	Supply Duct - Sample Rm 308, Hot Chem Lab 309, Counting Rm. 305, Hot Inst. Lab 306	9.6-7	None	Open	Zone SV Isolation	Closed
CD-34018 (ASV 60)	Exhaust Duct - Toilets 141, 147, 168 & 221, Control Rm Locker Rm 219 & 138, Hot Shower Rm 166, Laundry 142, Record Storage 302	9.6-7	None	Open	Zone SV Isolation	Closed
CD-34019 (ASV 22)	Exhaust Duct - Filter Rm, Waste Holdup Tank Area, Safety Injection Pump Area, Charging Pump Area, Containment Spray Pump Area	9.6-5	None	Open	Zone SV Isolation	Closed
CD-34020 (ASV 23)	Exhaust Duct - Filter Rm., Waste Holdup Tank Area, Safety Injection Pump Area, Charging Pump Area, Containment Spray Pump Area	9.6-5	None	Open	Zone SV Isolation	Closed
CD-34021 (ASV 51)	Exhaust Duct - Aux. Bldg. Exhaust Fan 1B Disch.	9.6-5	None	Open	Zone SV Isolation	Closed

Table 5.2-6
Zone SV Boundary Penetrations & Zone SV Boundary Dampers

Damper Number	Service	Flow Diagram Figure No.	Operating Function	Position	Accident Function	Position
CD-34022 (ASV 51)	Exhaust Duct - Aux. Bldg. Exhaust Fan 1A Disch.	9.6-5	None	Open	Zone SV Isolation	Closed
CD-34023 (ASV 31)	Exhaust Duct - Spent Fuel Pool Exhaust Fan 1A Disch.	9.6-5	None	Open	Zone SV Isolation	Closed
CD-34024 (ASV 31)	Exhaust Duct - Spent Fuel Pool Exhaust Fan 1B Disch.	9.6-5	None	Open	Zone SV Isolation	Closed
CD-34025 (ASV 66)	Exhaust Duct - Toilet & Locker Exhaust Fan Disch.	9.6-5	None	Open	Zone SV Isolation	Closed
CD-34026 (ASV 10)	Exhaust Duct - Decon Rm, Penetration Area El. 618'-0", Waste Evap. Area, Penetration Area El. 606'-0", Hydraulic Baler & Area, Waste Conc. Pumps & Tanks Area, Drumming Station Area, Boric Acid Tank Area	9.6-5	None	Open	Zone SV Isolation	Closed
CD-34027 (ASV 20)	Supply Duct - Aux. Bldg. Bsmt. & Mezzanine	9.6-5	None	Open	Zone SV Isolation	Closed
CD-34028 (ASV 40)	Supply Duct - Aux. Bldg. Fan Floor	9.6-5	None	Open	Zone SV Isolation	Closed
CD-34046 (ASV 70)	Exhaust Duct - Inst Lab 230 & 230A, Cold Chem. Lab 232	9.6-7	None	Open	Zone SV Isolation	Closed
CD-34047 (ASV 75)	Exhaust Duct - Cold Chem Lab Hood & Welding Shop Exh.	9.6-7	None	Open	Zone SV Isolation	Closed

Table 5.2-7
Shield Building Leakage Rates

(Based upon data presented in the Report NAA-SR-10100, Conventional Buildings for Reactor Containment)

Source of Leakage	Leakage Rate*(Cubic Feet in 24 Hours)	Leakage Rate* (Percent of Annulus Volume in 24 Hours)
Concrete surface of wall and dome	10	2.67E-3
Construction joints	20	5.35E-3
Cracks in concrete:		
1. Temperature cracks	50	13.37E-3
2. Shrinkage cracks	3	0.80E-3
3. Earthquake cracks (see Section 5.2.2)	negligible	negligible
4. Stress cracks at springline	2000	0.535
Penetrations (all)	50	13.37E-3
Equipment door	30	8.02E-3
Personnel door - 2	28,800	7.7
Total leakage (in-leakage to Shield Building Vent, System)	30,963	8.3

*At 1/4" W.C. (Water Column) differential pressure and 374,000 ft^3 annulus free volume.

Table 5.2-8
Allowable Stresses - Shield Building

Reinforced Concrete - Structural Steel

Loading Condition	Reinforced Concrete	Structural Steel
1. Dead loads plus live loads plus DBA load	ACI 318-63 Allowable Values	AISC Allowable Values
2. Dead loads plus live loads plus DBA load plus wind load or OBE load (0.06 g)	ACI 318-63 Allowable Values	AISC Allowable Values
3. Dead loads plus live loads plus DBA load plus DBE load (0.12 g)	1 1/2 times ACI 318-63 Allowable Values	1 1/2 times AISC Allowable Values
4. Dead loads plus live loads plus 300 mph design tornado	$f_c = 0.75\ f'_c$ $f_s = 0.90$ Y.S.	$f_s = 0.90$ Y.S.

f'_c = Minimum 28-day compressive strength of concrete
f_c = Compressive stress in concrete
f_s = Tensile stress in steel
Y.S. = Specified minimum yield strength or yield point of steel
ACI Allowable Values are working stress design allowable stresses

Table 5.2-9
Allowable Stress Criteria - Shield Building

			A-15 & A-408 Bars		A-432 Bars	
Loading Condition	Criteria	f_c	Allowable Working Stress (psi)	Percent of Min Spec Yield[1]	Allowable Working Stress (psi)	Percent of Min Spec Yield[1]
1. Normal loads + DBA	ACI 318-63 Allowable Values	$0.45\ f'_c$	20,000	50	24,000	40
2. Normal loads + DBA + wind (or) ± operational basis earthquake	ACI 318-63 Allowable Values	$0.45\ f'_c$	20,000	50	24,000	40
3. Normal loads + DBA ± design basis earthquake	1½ times ACI 318-63 Allowable Values	$0.675\ f'_c$	30,000	75	36,000	60

[1] Minimum specified yield points of steel reinforcement are as follows:
A-15 40,000 psi
A-408 40,000 psi
A-432 60,000 psi
ACI Allowable Values are working stress design allowable stresses.

Table 5.2-10
Membrane and Surface Stresses

	Membrane Stress (psi) Actual			Surface Stress (psi) Actual		
Case	Longitudinal	Circumferential	Allowable	Longitudinal	Circumferential	Allowable
			Personnel Airlock			
OBE	18024	17479	26250	26961	26276	52500
DBE	18064	17549	30450	27080	27452	52500
			Escape Airlock			
OBE	17598	17415	26250	25876	25248	52500
DBE	17608	17421	30450	25914	25384	52500

Table 5.2-11
Stresses Due to Temperature Difference

	Top of Cold Spot	Bottom of Cold Spot	5.5 Feet Below Cold Spot
Membrane Stresses			
Meridional Stress	0.58 ksi	0.82 ksi	0.84 ksi
Circumferential Stress	2.20	2.24	0.25
Bending Stresses			
Meridional Stress	4.65	0.40	0.57
Circumferential Stress	4.46	4.11	0.17

Table 5.2-12
Stresses Due to Pressure Difference

	Top of Cold Spot	Bottom of Cold Spot	5.5 Feet Below Cold Spot
Membrane Stresses			
Meridional Stress	1.64 ksi	4.35 ksi	6.72 ksi
Circumferential Stress	0.06	0.04	2.02
Bending Stresses			
Meridional Stress	1.27	0.39	7.20
Circumferential Stress	3.74	0.94	2.16

Table 5.2-13
Summary of Stresses Without Cold Spot

	Top of Cold Spot	Bottom of Cold Spot	5.5 Feet Below Cold Spot
With Operating Basis Earthquake			
Membrane Stresses			
Meridional	8.45 ksi	8.39 ksi	8.38 ksi
Circumferential	17.39	17.39	7.22
With Design Earthquake			
Membrane Stresses			
Meridional	8.66 ksi	8.68 ksi	8.68 ksi
Circumferential	17.39	17.39	7.22

Table 5.2-14
Maximum Stresses in the Containment Shell at the External Embedment Line

	Calculated Stress (psi)						
	Vertical and Horizontal Seismic Loads		Vessel Dead Loads Plus Internal Accident Pressure[c]	Total		Stress (psi)[b]	
Type of Stress	OBE	DBE	(41.4 psi)	OBE	DBE	OBE	DBE
Membrane:							
Meridian	423	846	7878	8301	8724	17500	20300
Circumferential	238	476	3594	3832	4070	17500	20300
Surface:							
Meridian	259	518	22438[a]	22697	22956	26250	30450
Circumferential	78	156	6052	6130	6208	26250	30450
Shear:							
Tangential	293	586	NA	293	586	NA	NA
Transverse	5.3	10.6	NA	5.3	10.6	NA	NA

(a) Accident Pressure (41.4 psi) ONLY
(b) See USAR Table 5.2-1
(c) Includes stresses caused by axial temperature gradient in embedment region.

Table 5.2-15
Steel and Concrete Stresses in Containment Vessel Bottom at Mezzanine Floor Line

	Calculated Stress (psi)						
	Horizontal Seismic Loads Only		Vessel Dead Loads Plus Internal Accident Pressure[c]	Total		Allowable Stress (psi)[b]	
Type of Stress	OBE	DBE	(41.4 psi)	OBE	DBE	DBE	DBE
Average Vessel Plate Membrane Hoop Stress in 20 in. Wide Band	6330	12660	14330	20660	26990	26250	30450
Approximate Bearing Stress of 20 in. Wide Hoop Band Bearing Against Internal Concrete	15	30	NA	15	30	1500[b]	2250[b]

(a) See USAR Table 5.2-1.
(b) Maximum Allowable Bearing Stress on Concrete (see ACI 318-63)
(c) Includes stresses caused by axial temperature gradient in embedment region.

Table 5.2-16
Combined Stresses

	Top of Cold Spot	Bottom of Cold Spot	5.5 Feet Below Cold Spot	Allowable Stress Intensity
With Operating Basis Earthquake				
Membrane Stresses Only – Including Local Membrane (No Temperature Stresses)				
Meridional	10.00 ksi	12.61 ksi	14.99 ksi	
Circumferential	17.45	17.43	9.24	
Max. Stress Intensity	17.50	18.99*	16.00	17.50 ksi
Membrane and Bending Stresses (No Temperature Stresses)				
Meridional	11.27 ksi	13.00 ksi	22.19 ksi	
Circumferential	21.19	18.37	11.40	
Max. Stress Intensity	21.23	19.892	22.79	26.25 ksi
All Stresses, Including Temperature				
Meridional	16.50 ksi	14.22 ksi	23.60 ksi	
Circumferential	27.85	24.72	11.82	
Max. Stress Intensity	27.86	25.34	24.09	52.50 ksi
With Design Basis Earthquake				
Membrane Stresses Only - Including Local Membrane (No Temperature Stresses)				
Meridional	10.12 ksi	12.87 ksi	15.14 ksi	
Circumferential	17.45	17.43	9.24	
Max. Stress Intensity	17.50	19.04	16.14	20.30 ksi
Membrane and Bending Stresses (No Temperature Stresses)				
Meridional	11.39 ksi	13.26 ksi	22.34 ksi	
Circumferential	21.19	18.37	11.40	
Max. Stress Intensity	21.23	19.87	22.94	30.45 ksi

Table 5.2-16
Combined Stresses

	Top of Cold Spot	Bottom of Cold Spot	5.5 Feet Below Cold Spot	Allowable Stress Intensity
All Stresses, Including Temperature				
Meridional	16.62 ksi	14.48 ksi	23.75 ksi	
Circumferential	27.85	24.72	11.82	
Max. Stress Intensity	27.86	25.35	24.23	52.50 ksi

* The maximum membrane stress intensity is 20530 psi and occurs at 6 in. below the bottom of this "cold spot." Because this point is not within 2.5 $\sqrt{Rt}$, of another point where the membrane stress intensity exceeds 1.1 S_m or 19250 psi, and since the height of the area stressed above 1.1 S_m does not exceed 0.5 $\sqrt{Rt}$, this area is classified as a local stress region with an allowable membrane stress intensity of 1.5 S_m or 26250 psi in accordance with Paragraph N412(j) of Section III of the ASME Boiler and Pressure Vessel Code.

Table 5.2-17
Assumptions and Results of Calculation of Wall Temperatures and Total Stresses

Wall density	144 lbm/ft^3
Conductivity	0.73 Btu/hr ft°F
Heat capacity	0.2 Btu/lbm °F
Containment temperatures	output of the revised CONTEMPT code with condensate heat transfer rate 25% higher than that of Tagami's
Annulus air temperatures	output of the Shield Building Computer Code with best estimated heat transfer rates
Compression stress for concrete:	
Allowable	1.8 ksi
Evaluated*	1.51 ksi
Tension stress for steel:	
Allowable	24 ksi
Evaluated*	22.42 ksi

* Including all stresses due to thermal, dead load, live load, design earthquake, membrane shear, and out-of-plumb effects.

Table 5.2-18
Hot Penetration Guard Pipes Allowable Stress

	Normal Operating Condition			Upset Cond.	Faulted Condition			
	Bending Due to Thermal	Thermal Δt Hoop	Long. Bend. WT	Long. Bend. WT + OBE	WT + DBE	WT + DBE + Press.	Thermal Δt + Press. Hoop	WT + DBE + Rupt. Jet
Allow. Stress	S_A	S_h	S_h	1.2 S_h	1.8 S_h or S_y	1.8 S_h or S_y	1.2 S_h	1.8 S_h or S_y
(psi)	(26,250)	(17,500)	(17,500)	(21,000)	(31,500)	(31,500)	(21,000)	(31,500)
Main Steam	11,655	11,375	221.4	226.02	230.6	2211.6	3191	1806.9
Feedwater	7,883	11,134	284.7	301.8	318.9	726.9	8014	2051.3

Figure 5.2-1 Shell Transition Zone and Internal Stiffeners

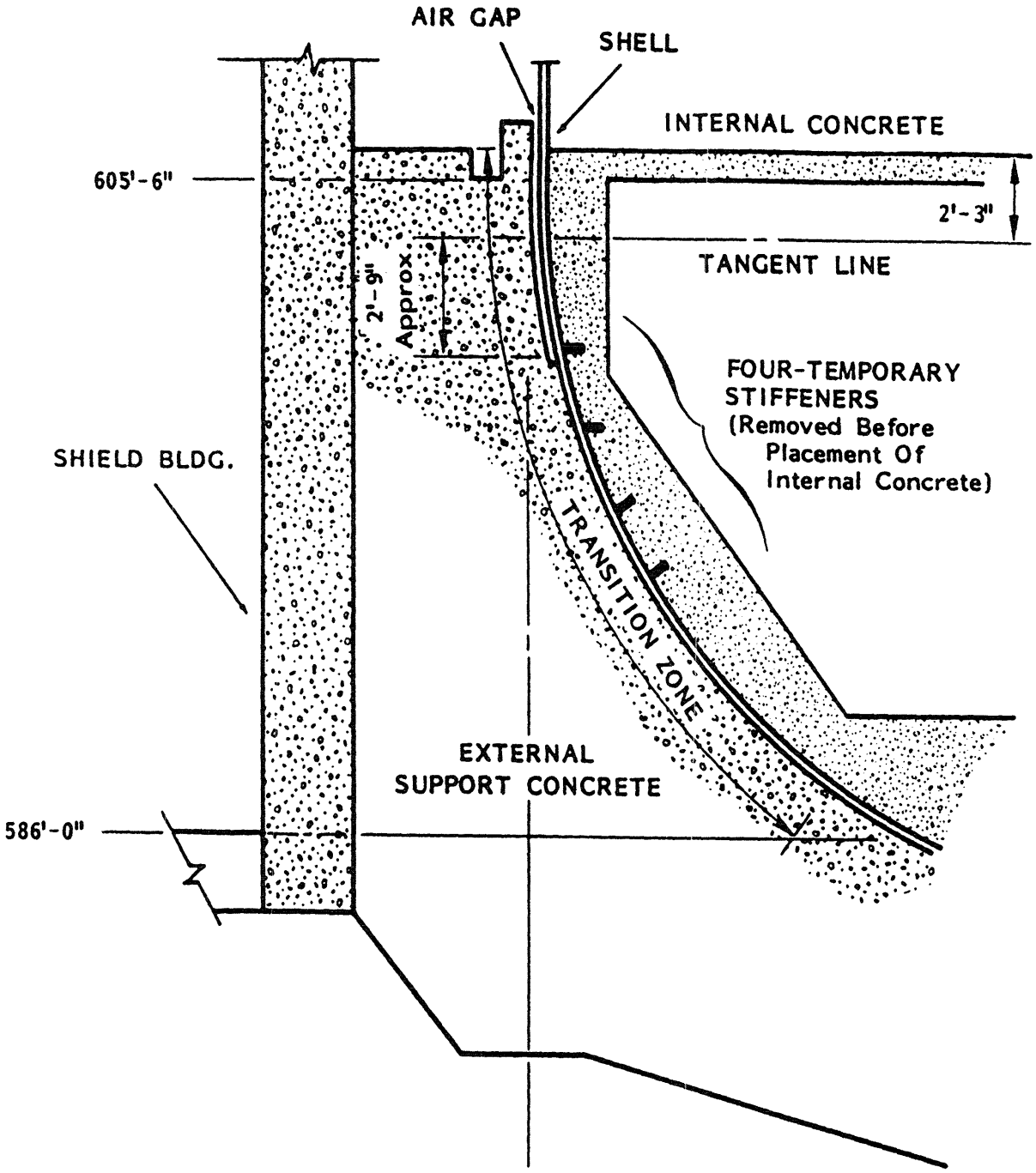

Figure 5.2-2 Section of Base Slab & Wall Reinf. Details

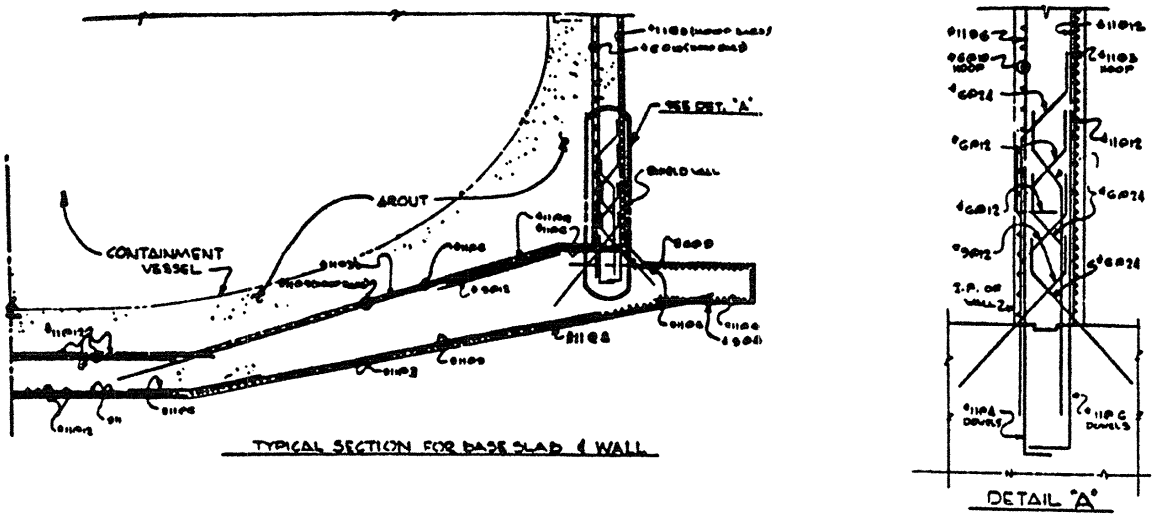

Figure 5.2-3 Plan of Base Slab Reinf. Details

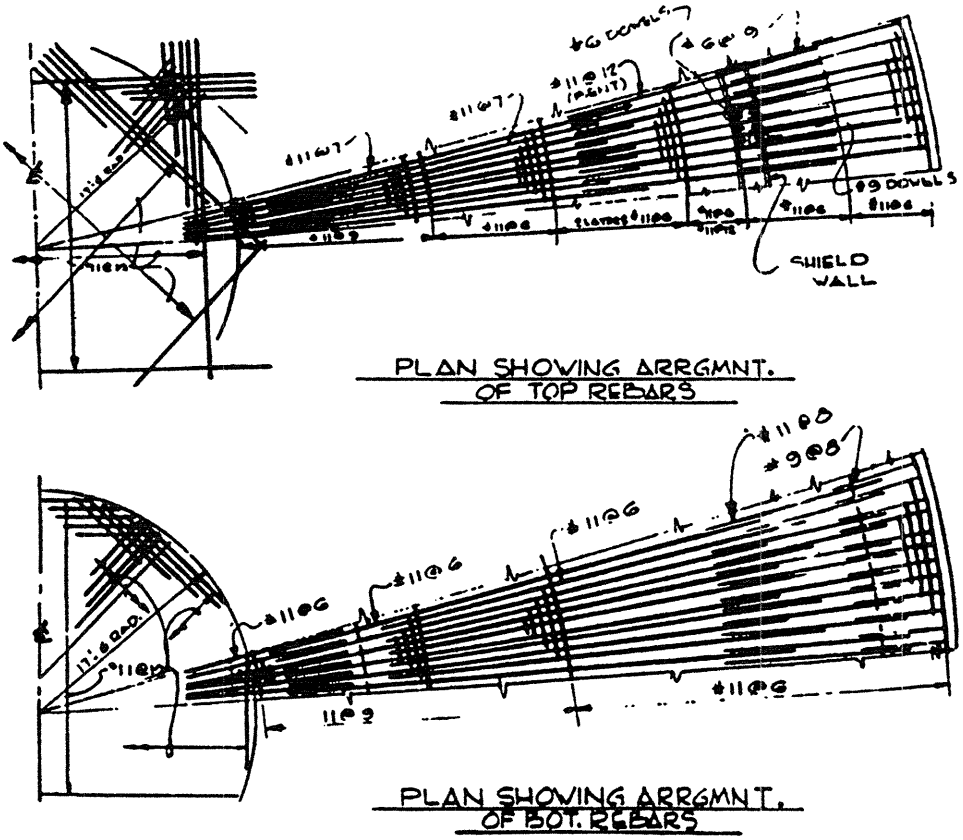

Figure 5.2-4 Section of Dome Slab & Wall Reinf. Details

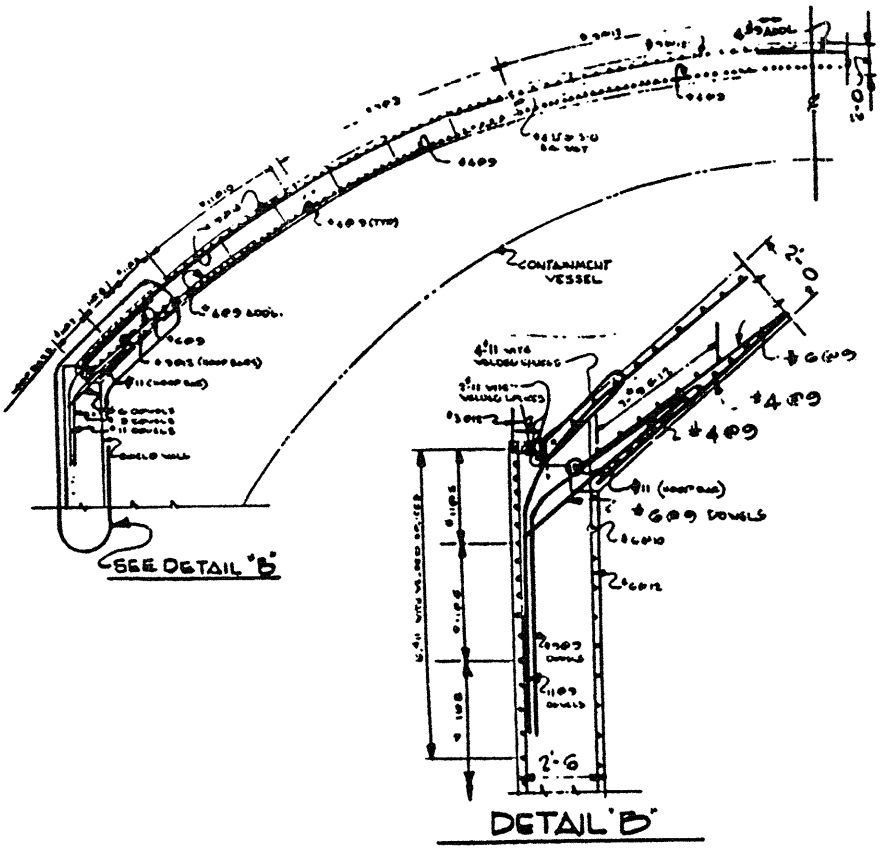

Figure 5.2-5 Plan of Dome Slab & Wall Reinf. Details

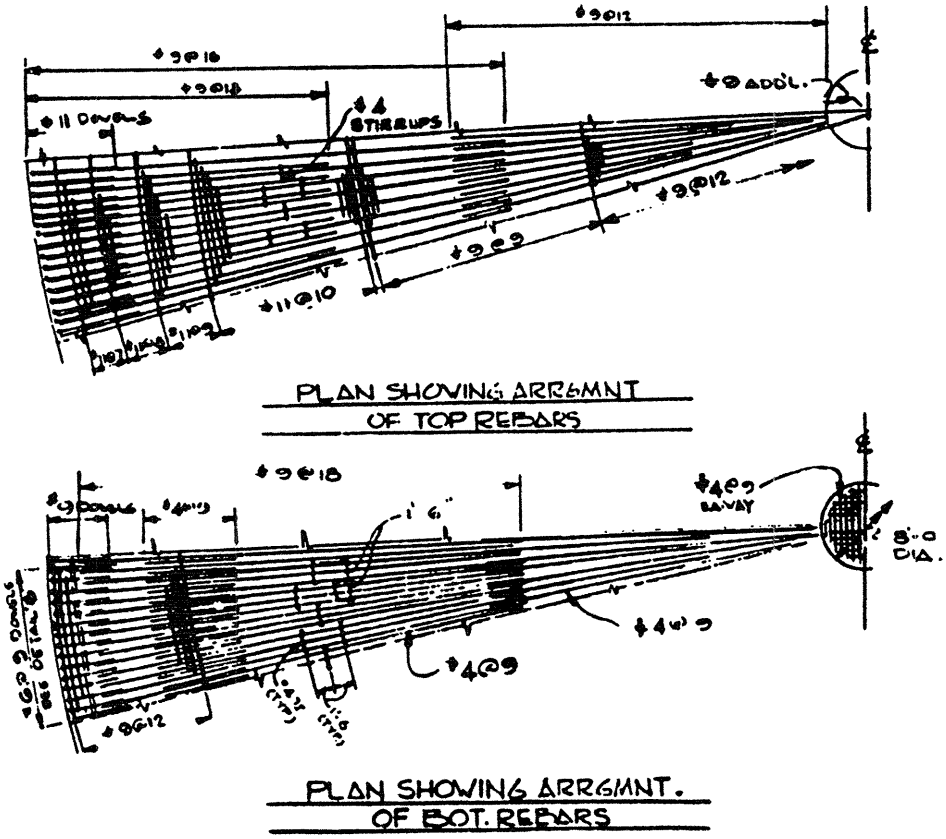

Figure 5.2-6 Large Opening in Wall Typical Arrangement of Reinforcement

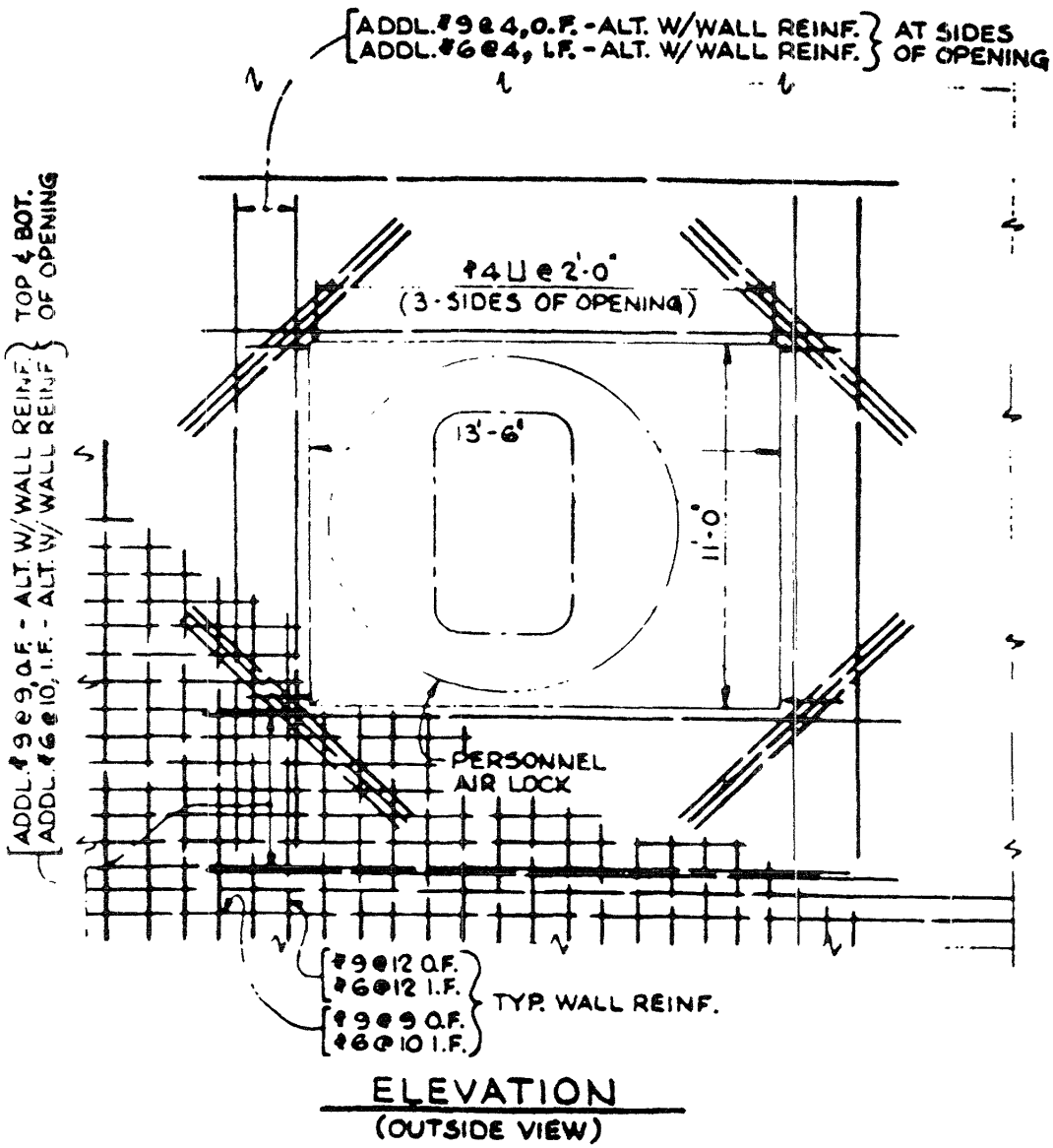

Figure 5.2-7 Temporary Support Structure

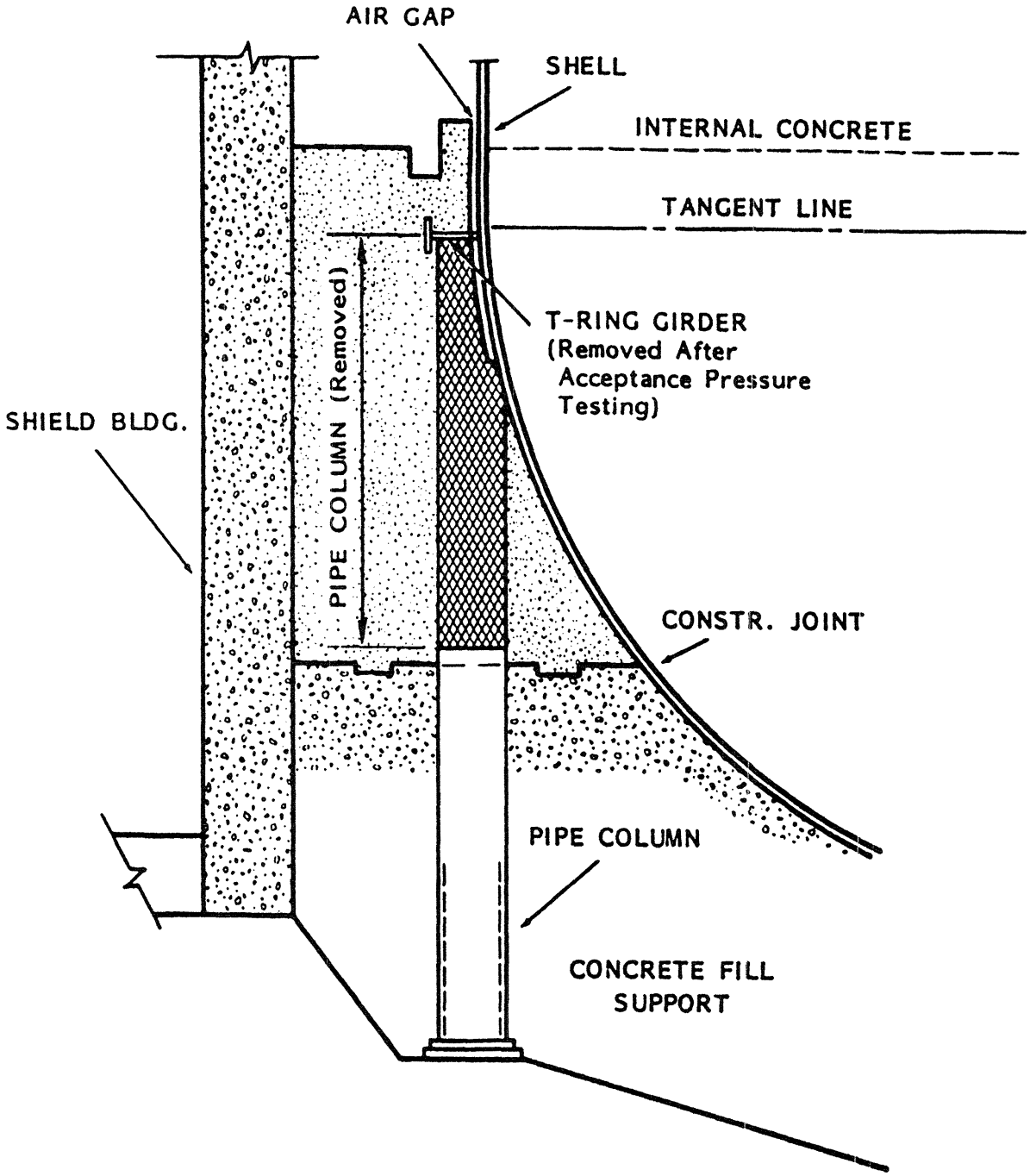

Intentionally Blank

Figure 5.2-8 Electrical Penetration Assembly

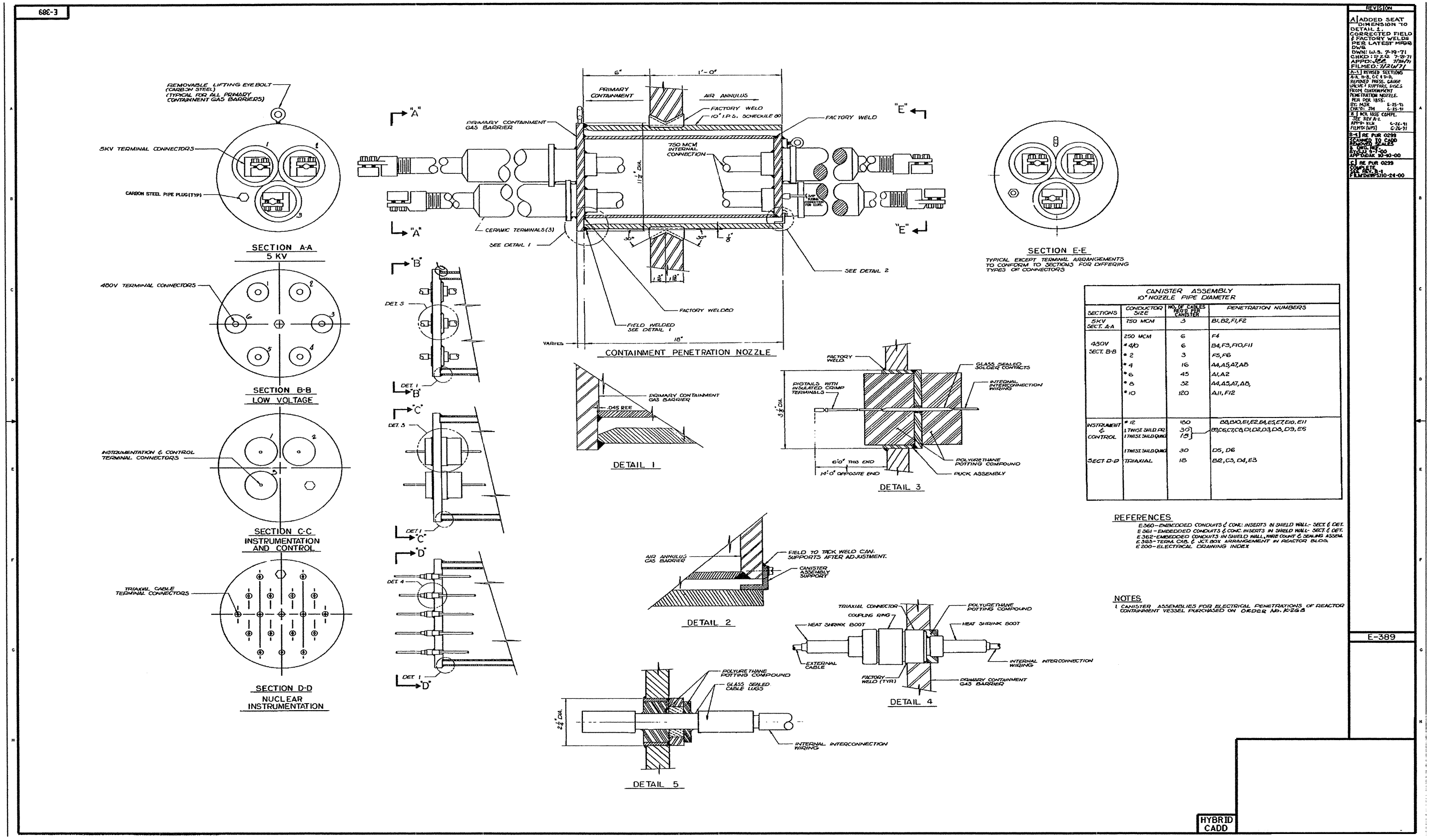

CANISTER ASSEMBLY
10" NOZZLE PIPE DIAMETER

SECTIONS	CONDUCTOR SIZE	NO. OF CABLES REQ'D PER CANISTER	PENETRATION NUMBERS
5KV SECT. A-A	750 MCM	3	B1, B2, F1, F2
480V SECT. B-B	250 MCM	6	F4
	#4/0	6	B4, F3, F10, F11
	#2	3	F5, F6
	#4	16	A4, A5, A7, A8
	#6	45	A1, A2
	#8	32	A4, A5, A7, A8,
	#10	120	A11, F12
INSTRUMENT & CONTROL	#12	150	B8, B9, B11, E2, E4, E5, E7, E10, E11
	1 TWIST SHLD PR.	30	B3, C6, C7, C8, D1, D2, D3, D8, D9, E6
	1 TWIST SHLD QUAD	15	
	1 TWIST SHLD QUAD	30	D5, D6
SECT. D-D	TRIAXIAL	18	B2, C3, D4, E3

REFERENCES

E 360 – EMBEDDED CONDUITS & CONC. INSERTS IN SHIELD WALL – SECT. & DET.
E 361 – EMBEDDED CONDUITS & CONC. INSERTS IN SHIELD WALL – SECT. & DET.
E 362 – EMBEDDED CONDUITS IN SHIELD WALL, WIRE COUNT & SEALING ASSEM.
E 363 – TERM. CAB. & JCT. BOX ARRANGEMENT IN REACTOR BLDG.
E 200 – ELECTRICAL DRAWING INDEX

NOTES

1. CANISTER ASSEMBLIES FOR ELECTRICAL PENETRATIONS OF REACTOR CONTAINMENT VESSEL PURCHASED ON ORDER No. K-268

E-389

HYBRID CADD

Intentionally Blank

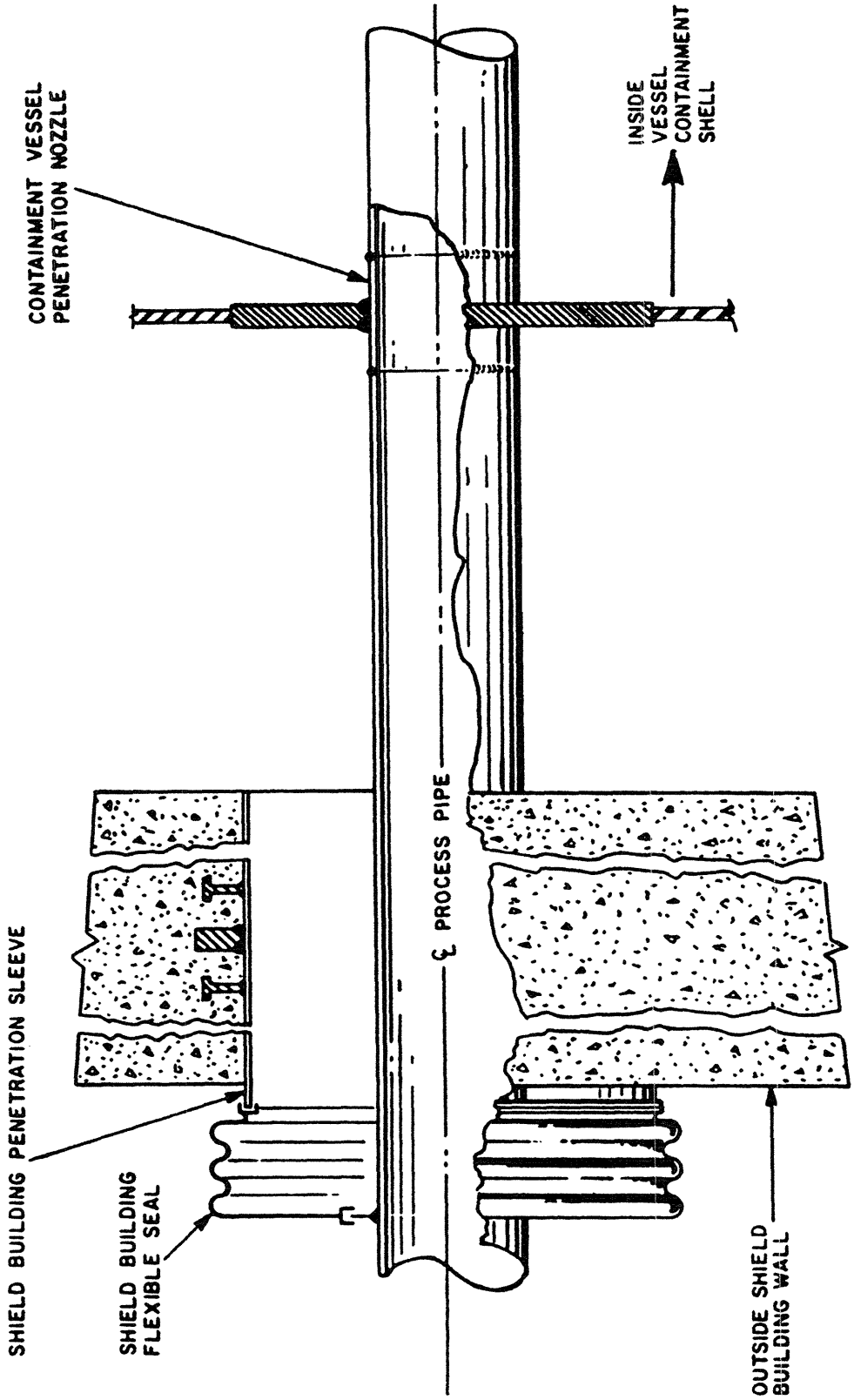

Figure 5.2-9 Cold Piping Penetrations Assembly

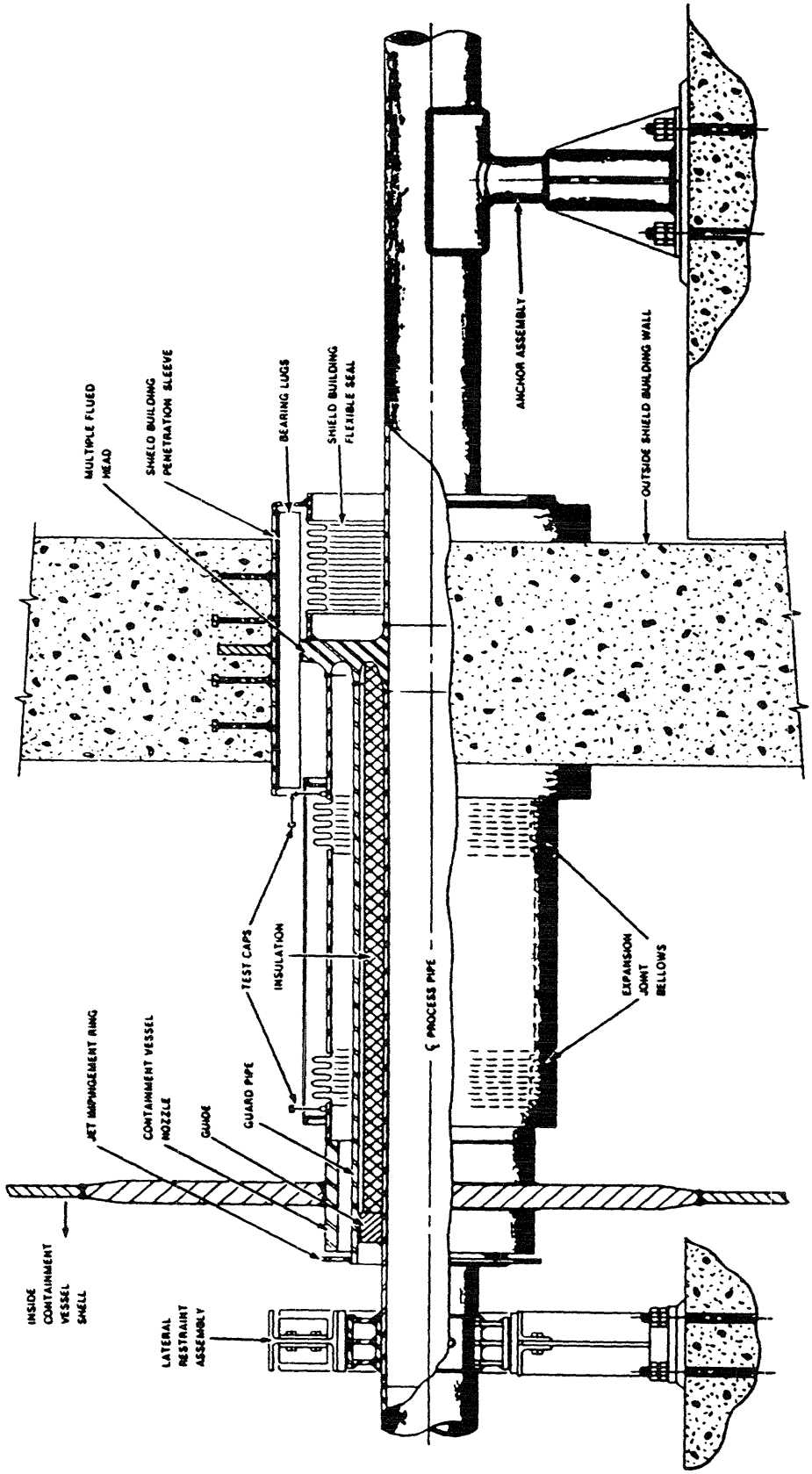

Figure 5.2-10 Residual Heat Removal Piping Penetrations Assembly

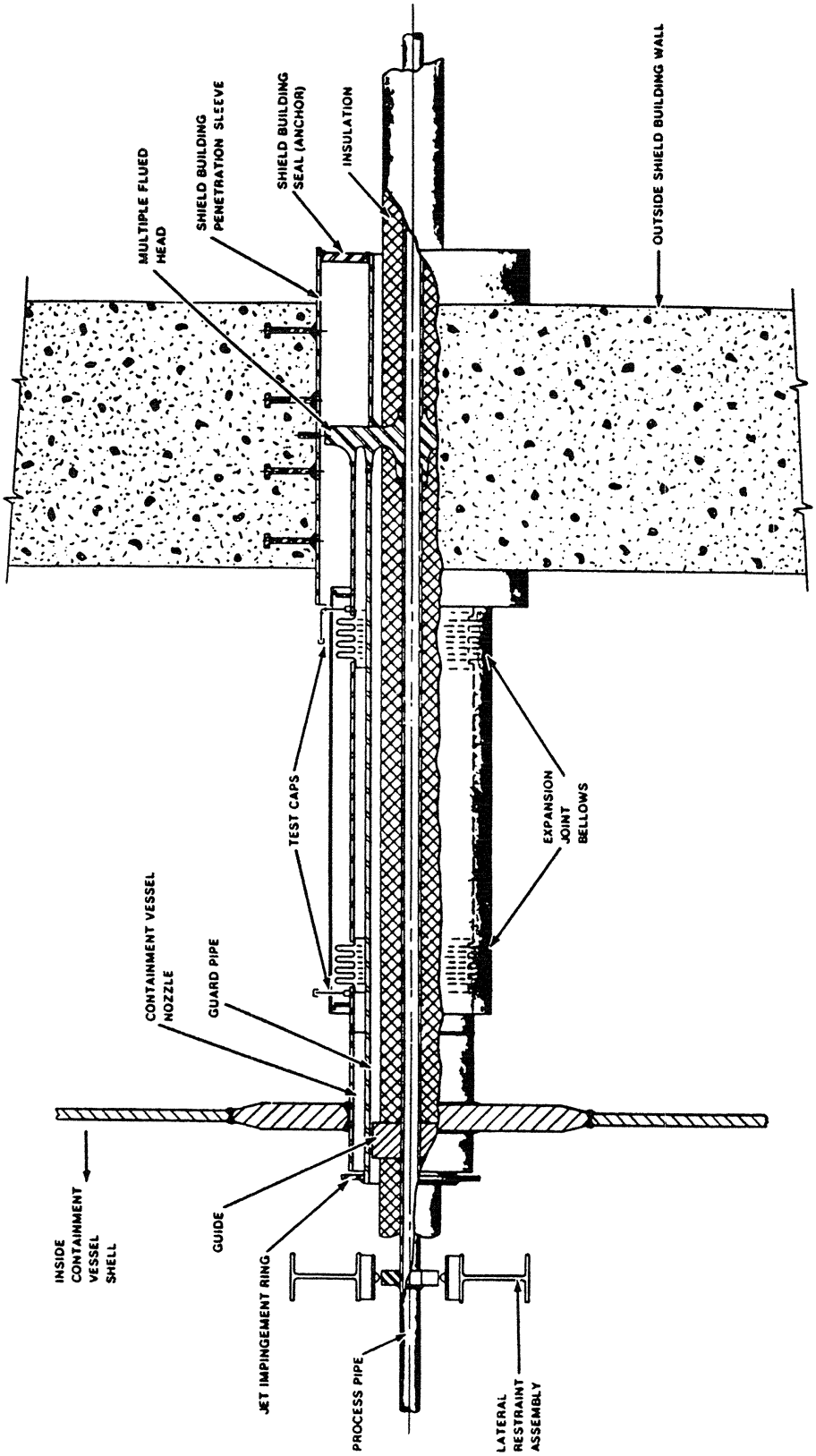

Figure 5.2-11 Steam Generator Blowdown and Letdown Line Piping Penetrations Assembly

Intentionally Blank

Figure 5.2-12 Containment System Calculated Displacements Due to Earthquake, Pressure and Temperature

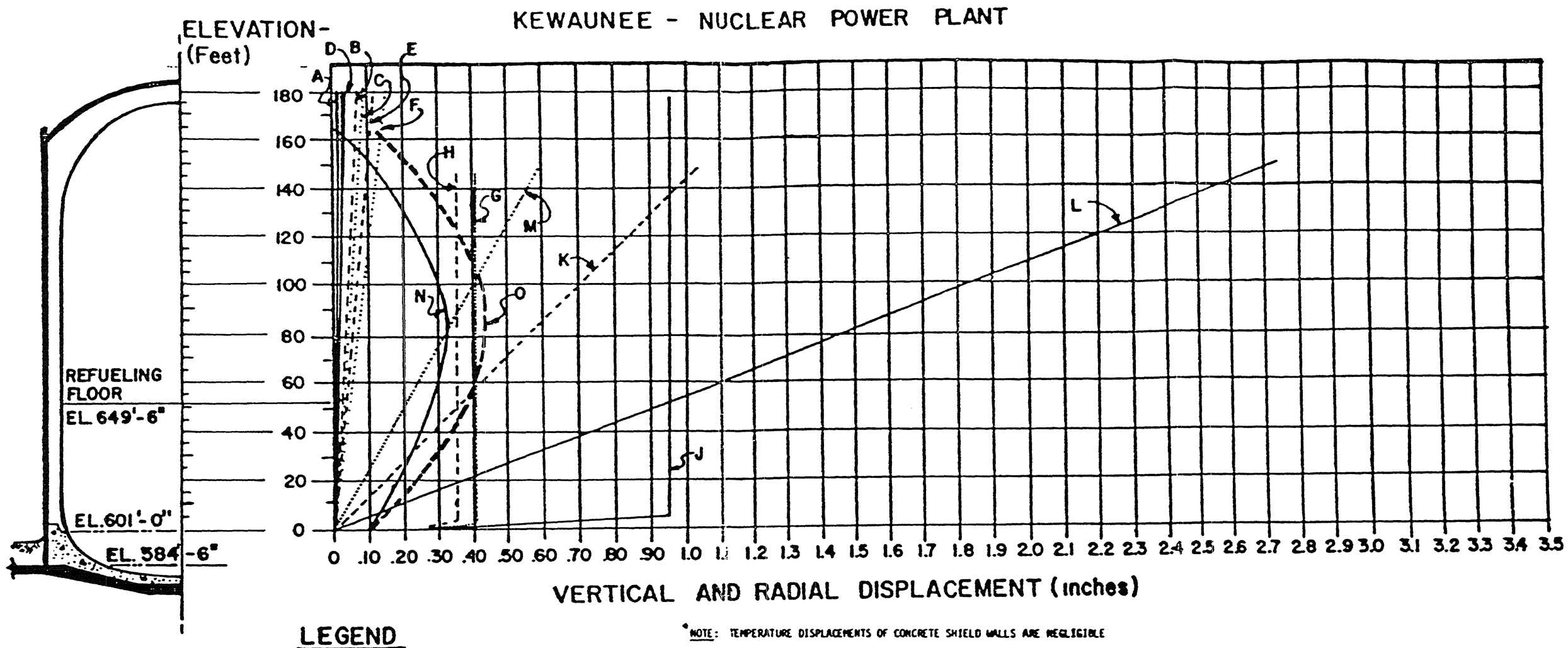

LEGEND

A: CONTAINMENT VESSEL HORIZONTAL DISPLACEMENT DUE TO OBE.*

B: SHIELD BUILDING HORIZONTAL DISPLACEMENT DUE TO DESIGN OBE.

C: MAXIMUM RELATIVE HORIZONTAL DISPLACEMENT BETWEEN CONTAINMENT VESSEL AND SHIELD BUILDING DUE TO OBE.

D: CONTAINMENT VESSEL HORIZONTAL DEFLECTION DUE TO DBE.*

E. SHIELD BUILDING HORIZONTAL DEFLECTION DUE TO DBE.

F. MAXIMUM RELATIVE HORIZONTAL DISPLACEMENT BETWEEN CONTAINMENT VESSEL AND SHIELD BUILDING DUE TO DBE.

G. CONTAINMENT VESSEL HORIZONTAL RADIAL DISPLACEMENT DUE TO INTERNAL PRESSURE (46 PSI)

OBE = OPERATIONAL BASIS EARTHQUAKE
DBE = DESIGN BASIS EARTHQUAKE

*NOTE: TEMPERATURE DISPLACEMENTS OF CONCRETE SHIELD WALLS ARE NEGLIGIBLE

H. CONTAINMENT VESSEL HORIZONTAL RADIAL DISPLACEMENT DUE TO TEMPERATURE INCREASE (30°F-120°F) See original roll "DE" approx. 1830 to 1840.

J. CONTAINMENT VESSEL HORIZONTAL RADIAL DISPLACEMENT DUE TO DBA* TEMPERATURE INCREASE (30°F-268°F)

K. CONTAINMENT VESSEL VERTICAL DISPLACEMENT DUE TO TEMPERATURE INCREASE (30°F-120°F)

L. CONTAINMENT VESSEL VERTICAL DISPLACEMENT DUE TO DBA* TEMPERATURE INCREASE (30°F-268°F)

M. CONTAINMENT VESSEL VERTICAL DISPLACEMENT DUE TO INTERNAL PRESSURE (46 PSI)

N. MAXIMUM TORNADO DISPLACEMENT OUTWARD

O: MAXIMUM TORNADO DISPLACEMENT INWARD

* DBA = DESIGN BASIS ACCIDENT

Figure 5.2-13 Main Steam and Feedwater Piping Penetrations Assembly

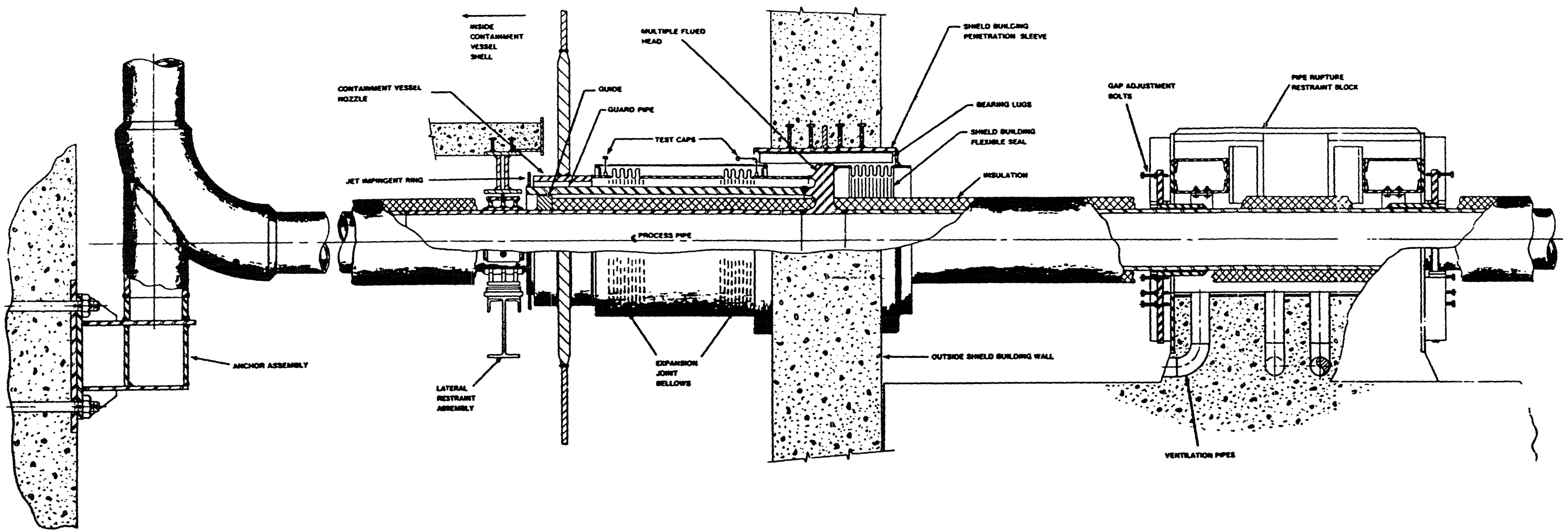

Figure 5.2-14 Shield Building Leakage Rate

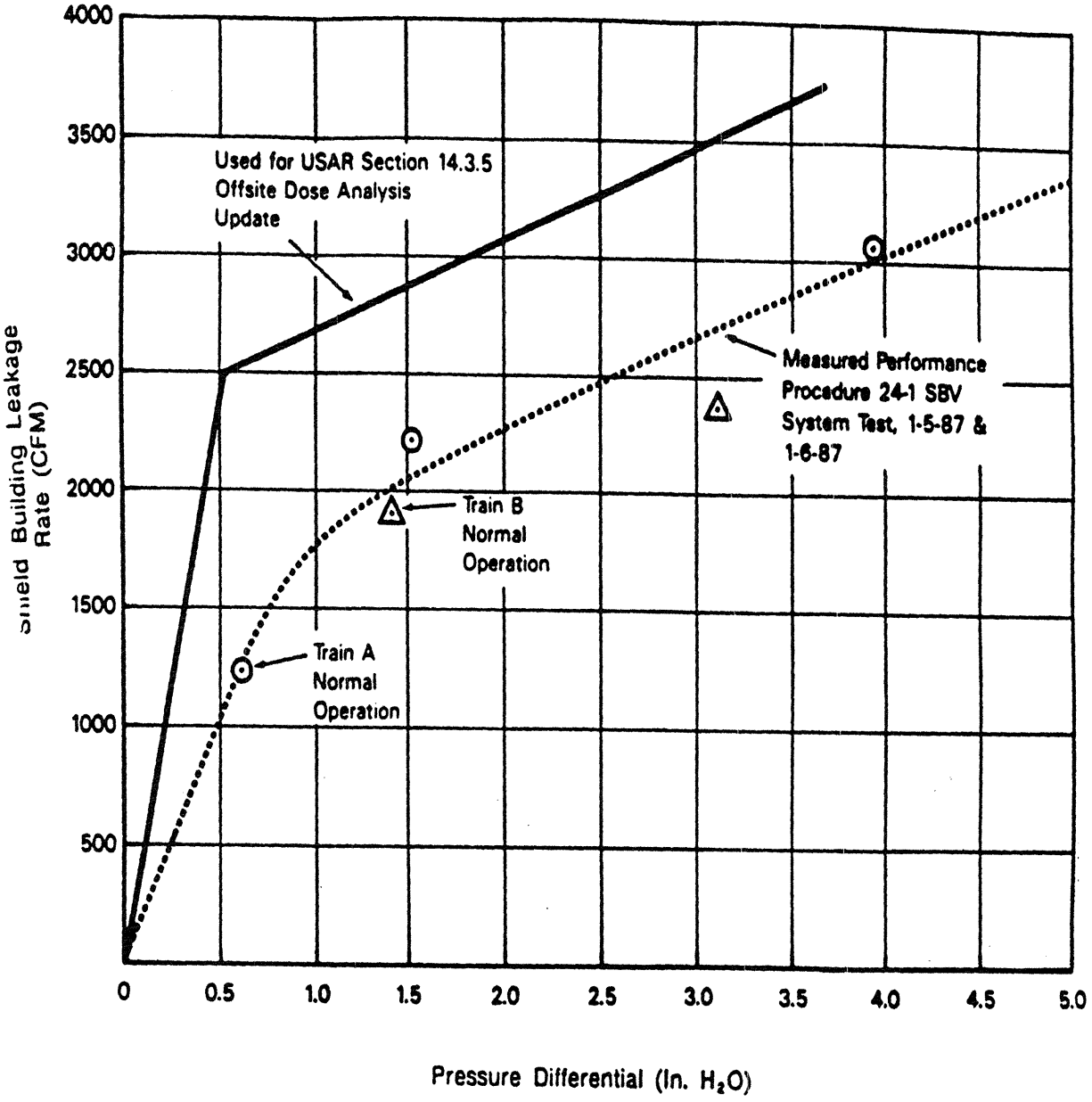

Intentionally Blank

5.3 REACTOR CONTAINMENT VESSEL ISOLATION SYSTEMS

5.3.1 Design Bases

5.3.1.1 Containment Isolation Valves

Criterion: Penetrations that require closure for the containment function shall be protected by redundant valving and associated apparatus (GDC 53).

Isolation valves are provided as required for fluid system lines penetrating containment to assure that:

a. Leakage through all fluid line penetrations not serving accident-consequence-limiting systems is minimized by a double-barrier. The double-barriers take the form of closed pipe systems, both inside and outside the Reactor Containment Vessel, and various types of isolation valves. The double barrier arrangement provides two reliable low leakage barriers between the RCS or containment atmosphere and the environment. The failure of any one barrier will not prevent suitable isolation;

b. Fluid line penetrations normally serving accident-consequence-limiting systems can be isolated by manual action if the automatic system should malfunction;

c. No single credible failure or malfunction (expected fault condition) occurring in any active system component can result in loss-of-isolation or intolerable leakage.

An isolation actuation system is provided to close those automatically operated containment isolation valves in fluid line penetrations used during normal operation but not required for Engineered Safety Features functions. The automatic closure is initiated by a Safety Injection Signal or by manual initiation (see Chapter 7).

5.3.2 System Design

The actuation systems for automatically closing the isolation systems for all penetration classifications are discussed in Chapter 7. Isolation valves inside the Reactor Containment Vessel are equipped with operators and actuation devices capable of operating reliably under post-accident containment conditions. Valves which are designated as automatic trip isolation valves are designed to either fail-closed upon loss of actuation power and/or loss of power to control logic, or are provided with reliable source of actuation power and a “fail-close mode” upon loss of power to control logic.

Certain valves for Class 6 usage (Engineered Safety Features) may be exempted from the “fail-close” criterion. The operation of valves in these systems is governed by the functional requirements of the system as outlined in their respective Sections.

Table 5.2-3 lists the containment piping penetrations and describes the type of isolation barrier provided, the type of isolation valve provided, and the nature of the isolation system. Table 5.2-3 is not intended to be an all-inclusive listing of containment isolation valves; only major components associated with each penetration are included. Containment isolation design was reviewed and addressed as required by TMI Action Item II.E.4.2, "Containment Isolation Dependability," of NUREG-0737. The eight classes of penetration isolation described in the following text are used in Table 5.2-3 under the column of PENETRATION CLASS.

- Class 1 (Outgoing Lines, Reactor Coolant System)

  Normally operating outgoing lines connected to the RCS are provided with either two automatically-operated trip valves in series located near the Reactor Containment Vessel (one inside and one outside), or two manual valves normally closed during power operation capable of being maintained under administrative control with a locking system or equivalent. In addition to the isolation valves, each line connected to the RCS is provided with a remotely operated root valve located near its connection to the RCS.

- Class 2 (Outgoing Lines)

  Normally operating outgoing lines not connected to the RCS, not protected from missiles throughout their length, and not required to be open for assumed post-accident conditions, are provided with two automatically-operated trip valves. At least one valve is external to the Reactor Containment Vessel; the other may be internal or external.

- Class 3 (Incoming Lines)

  Incoming lines connected to open systems outside the Reactor Containment Vessel are provided with two check valves in series, one located inside and one outside the Reactor Containment Vessel. The internal check valve is located near the Reactor Containment Vessel shell.

  Incoming lines connected to closed systems outside the containment are provided with at least one check valve located near the Reactor Containment Vessel on the inside and a manually-operated (local or remote) isolation valve outside the Reactor Containment Vessel.

  An automatically-operated trip valve is considered to be the equivalent of a check valve and vice-versa.

- Class 4 (Missile Protected)

  Normally operating incoming and outgoing lines which penetrate the Reactor Containment Vessel, and are connected to closed systems inside the Reactor Containment Vessel, and which have a low probability of being ruptured by the assumed accident, are provided with at least one remotely-operated valve located outside the Reactor Containment Vessel.

Steam Generator secondary side isolation valves receive special treatment because their function is not containment isolation for the LOCA, but only containment isolation for main steam line rupture within containment.

- Class 5 (Normally-Closed Lines Open to the Containment)

  Lines which penetrate the Reactor Containment Vessel and which can be opened to the Reactor Containment Vessel atmosphere, but which are normally closed during reactor operation, are provided with two isolation valves in series, two blind flanges, or one isolation valve and one blind flange. One valve or flange is located inside, and the second valve or flange is located outside the Reactor Containment Vessel. Testable double o-ring seals inside containment also provide a double barrier against leakage and therefore satisfy the intent of 10 CFR 50, Appendix A, GDC 56 for containment integrity.

- Class 6 (Systems Required to Operate in the Post-Accident Condition)

  The design and operational criteria for the isolation valves in these systems is governed by the functional requirements of the systems as outlined in the Section in which the system is described.

- Class 7 (Normally-Closed Lines with Leakage Returned to Shield Building Annulus)

  Class 7 lines are the same as Class 5 lines with the addition of a feature to assure that any small leakage through the isolation system is returned to the Shield Building annulus for processing by the Shield Building Ventilation System (refer to Figure 5.3-1).

- Class 8 (Instrument Lines)

  Class 8 lines are small diameter lines penetrating containment for the purpose of instrumentation and control of containment conditions. Due to their small size and high probability of requirement post-accident, these penetrations receive special containment integrity provisions as stated in Regulatory Guide 1.11 dated 3/10/71, and ANSI/ANS 56.2-1984. The containment integrity barriers used for these penetrations may include valves, caps, compression fittings, instrument diaphragms, and the instrument tubing itself.

During RFO 28, instrumentation containment pressure measurement tubing at Penetrations #27EN, 27N, 27NE, and 36N, located between containment and the shield building, was analyzed to ASME Section III, reference Table B.7-6.

5.3.3 System Evaluation

Assurance that valves of adequate leak tightness are provided for containment isolation service is obtained through the specification and testing of these valves in accordance with Manufacturers Standardization Society, Standard Practice SP-61-1961, “Hydrostatic Testing of Steel Valves,” The specified maximum permissible leakage rates, as manufactured, is 1/10 of a standard cubic foot of air per hour per inch of diameter of nominal valve size. Leak tightness assurance of valves once in service, is by testing as part of the integrated leak-rate tests for the Containment System and as part of the periodic valve operability and leakage tests.

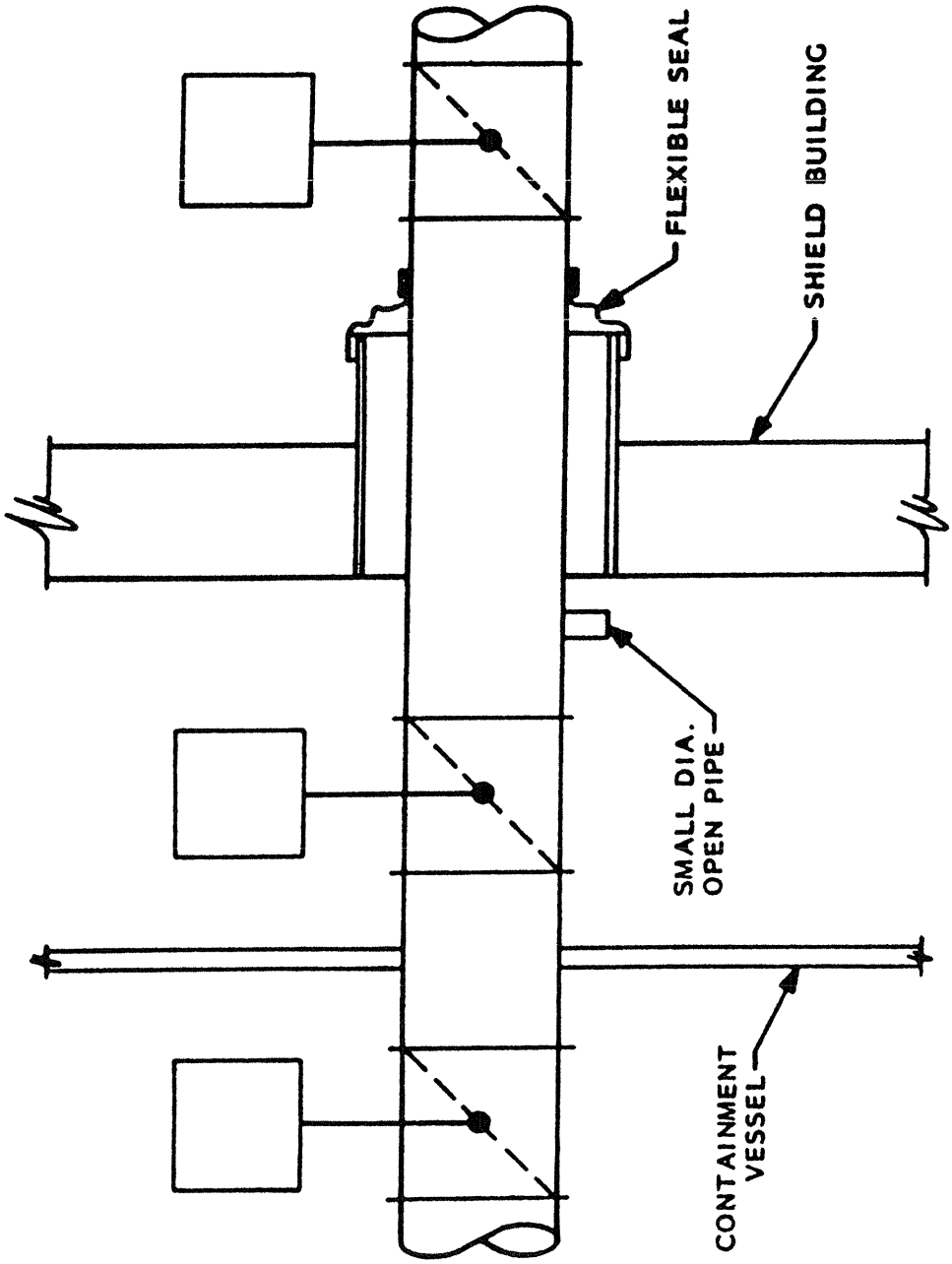

Figure 5.3-1 Special Containment Isolation System - Ventilation Purge and Supply

Intentionally Blank

5.4 CONTAINMENT VESSEL AIR HANDLING SYSTEM

5.4.1 Design Conditions

The Containment Vessel Air Handling System consists of the Containment Air Cooling System and the Purge and Ventilation System. The function of the Air Cooling System is to remove the heat lost to the Reactor Containment Vessel environment during normal operations, from equipment and piping inside the Reactor Containment Vessel and, during post-accident conditions, to remove energy from the Reactor Containment Vessel as required and described in Chapter 6.

The function of the Purge and Ventilation System is to provide fresh, tempered air for comfort during maintenance and refueling operations and to purge contaminated air from the Reactor Containment Vessel whenever required for access. The Purge and Vent System satisfies the requirements of provisions six and seven of Item II.E.4.2 of NUREG-0737 (see NRC SERs in Reference 16 and Reference 17).

The normal mode of operation requires the Reactor Containment Vessel to be completely closed whenever the Reactor is less than 1.0-percent k/k sub-critical or the Reactor Coolant System's temperature exceeds 200°F.

The Purge and Vent System is not used when the reactor is above the hot shutdown operating condition. The Purge and Vent Valves RBV-1, RBV-2, RBV-3 and RBV-4 are sealed closed in accordance with NRC Standard Review Plan Section 6.2.4.II.6.f when above hot shutdown because of NRC concerns over the ability of these valves to close under Design Basis LOCA conditions.

For entry at or below hot shutdown, the Reactor Containment Vessel may be vented using the Purge and Vent system to reduce the concentration of radioactive gases and airborne particulates. The health and safety of the public is assured by the quick closure of the purge, and vent valves in the event of high radiation in the containment system vent.

5.4.1.1 Design Basis

The Containment Air Cooling System is sized such that any three of the four fan-coil units will provide adequate heat removal capacity from the Reactor Containment Vessel during operation, to maintain interior air temperatures below the maximum temperature allowable for any component and to obtain temperatures below 104°F in accessible areas during hot standby operation. The fan-coil units and assorted emergency discharge dampers will also be utilized for emergency cooling under post-accident conditions. Their use for that purpose is described in Section 6.3.

The fan-coil units of the Air Cooling System are utilized to distribute air adequately over equipment and around occupied spaces for ventilation service. Equipment operation will provide

heating within the Reactor Containment Vessel when required during shutdown. The Containment Vent Supply unit will also furnish heating of makeup air under shutdown conditions.

The Purge and Ventilation System is sized to provide a reduction of the radioactivity in the Reactor Containment Vessel air following normal full-power operation to the level defined by 10 CFR 20 for a 40 hour occupational work week, within 2-6 hours after reactor shutdown. Purging of the Reactor Containment Vessel will normally be accomplished within two hours following the beginning of purge.

Provision is made in the design of the Purge and Ventilation System for 1½ air changes per hour during refueling and maintenance operations.

The Containment System Vent provides for the discharge of air at an elevation near the top of the Shield Building within the influence of the building wake effect, to improve the dispersion of gaseous releases.

5.4.2 System Design

The Containment Vessel Air Handling System is shown in Figure 5.4-1.

The Containment Air Cooling System consists of four fan-coil units located in the Reactor Containment Vessel. These will recirculate and cool the Reactor Containment Vessel atmosphere. The fan-coil units use service water as the heat removal medium and discharge the cooled air through ducts to provide adequate distribution. Additional circulating fans are provided as required to insure a positive flow of air to the areas around the RCCA drives, and the reactor refueling cavity.

The Purge and Ventilation System consists of a tempered air supply and a filtered exhaust system, as described below. The exhaust discharges to the monitored Containment System Vent, which extends through the Shield Building annulus to a point approximately five feet above the lower edge of the Shield Building domed roof. The equipment for the Purge and Ventilation System is located outside the Shield Building.

When high airborne radioactivity levels within containment preclude a normal shutdown entry to the Reactor Containment Vessel, the initial purge will be directed to the purge filter (particulate-absolute-carbon). Radiation monitors in the Containment System Vent are used to assure that the discharge rate and filtering efficiency is such that dose rates set by the Technical Specifications are not exceeded. Purge flow is controlled from a local control station where a remote readout from the Vent Radiation Monitor has been provided.

When the Reactor Containment Vessel air activity has decreased sufficiently for release to the atmosphere with particulate filtration only, the valve in the Vent line can be opened and the purge line valve closed. Should some incident occur to cause the air activity to increase above the

setpoint of the Containment System Vent Monitor, the vent and purge line valves would both be automatically closed.

5.4.2.1 Isolation Valves

The ventilation isolation valves are included as part of the containment isolation systems listed in Table 5.2-3.

The valves immediately outside the Reactor Containment Vessel are conventional butterfly valves, specified to be adequately leak-tight with maximum internal pressure inside the Reactor Containment Vessel. The valves inside the Reactor Containment Vessel are butterfly valves, which are leak-tight with maximum internal pressure on either side of the valves. This permits the space between the two containment purge isolation valves to be pressurized to the maximum internal pressure at any time to ascertain continued leak tightness. The shaft seals for all purge isolation valves consist of a double seal with a leak test space between the seals, which can be pressurized for testing shaft seal leakage. The purge isolation valves will fail in the closed position upon loss of actuating power (electric or air).

The valves, which perform a containment isolation function will withstand the necessary earthquake loadings. These valves have withstood simultaneous tests at 0.5g horizontal and 0.25g vertical accelerations. Each isolation valve was reviewed during final design of piping systems to determine the extent of support required. Most of the valves are supported by the piping system of which they are a part. Special supports were included as required.

5.4.3 Vacuum Relief System

Vacuum relief devices or systems are provided to protect the Reactor Containment Vessel against excess differential pressures. Such differential pressure conditions (vacuum) may exist inside the containment vessel if the Containment Air Cooling Systems are operated with a heat removal capability in excess of the heat inputs at any time during normal or post-accident operations.

5.4.3.1 Design Basis

The vacuum relief valves are sized to assure that the Reactor Containment Vessel will not be subjected to an internal pressure in excess of 0.8 psi below the external pressure. The design basis for sizing the relief system has been identified as the inadvertent and simultaneous operation of all Containment Air Cooling Systems during normal operation or following a plant shutdown, when heat inputs to the containment are minimal and the cooling water temperatures produce the largest heat removal rates for the respective cooling systems. The Containment Air Cooling Systems to be included in the analysis are the two full-capacity Containment Internal Spray Systems and the four fan-coil units.

5.4.3.2 System Design

Two valves in series are used in each of the two large containment penetrations, which permit air to flow from the Shield Building annulus into the containment vessel. The valves in each line consist of an air-to-open, spring-to-close, butterfly valve and a self-actuated, horizontally installed, swing disc check valve as shown in Figure 5.4-2. Individual accumulators are provided at each vacuum breaker isolation butterfly valve to provide one (1) complete cycle of the valve (open and close) for a minimum of 72 hours following a loss of instrument air. Since only one vacuum breaker is required to operate to protect the vessel and the two redundant vacuum breakers are located at different elevations in the annulus and separated by 72 feet around the containment vessel. The consequences of a single failure would be the failure of a single vacuum-breaker isolation butterfly valve to open. (The aforementioned butterfly valves and the Turbine Building service water header valves require a Class I compressed air supply.)

Vendor-supplied flow versus pressure-drop information was used to ensure that sufficient flow area is available in each line so that the combined pressure drop at rated flow through both valves in series will not exceed the permissible pressure. Satisfactory operation of either of the two parallel lines is adequate to meet the design conditions.

Each air-operated vacuum relief valve has a piston-type actuator with a 3-way solenoid pilot valve. The design will fail closed on loss of instrument air or solenoid power to assure containment isolation.

Each solenoid pilot valve air supply is equipped with a reservoir of sufficient capacity to provide one (1) complete valve cycle for 72 hours following a loss of instrument air. Each reservoir sub-system consists of accumulators, check valves and components designed and installed per the requirements stated in Appendix B for safety-related equipment to assure operability for all design basis accidents. The source of instrument air to the Class 1 reservoirs is located in a Class 1 area of the Auxiliary Building accessible post-accident. This allows the connection of a back-up air supply to assure long term vacuum protection.

Each reservoir is equipped with a pressure switch which closes when the pressure drops below the preset level, providing a signal to the sequence of event recorder, and a signal to a common annunciator in the Control Room. Contacts are provided on each power operated vacuum relief valve to signal the sequence of event recorder whenever the valve is in the closed position, and the two valves operate a common annunciator in the Control Room when either is closed.

The control logic for each valve is identical. The control logic input signals for the vacuum relief valve are from the following:

1. A three position control switch (CLOSE/AUTO/OPEN) with spring return from CLOSE or OPEN to AUTO.
2. Containment Isolation Signals
3. Differential pressure switches connected by piping at two different locations to measure the pressure difference between the Shield Building annulus and that within the Containment. These instruments have a scale range of 0 to 1.0 psi. A reading on scale indicates containment atmosphere is at a vacuum relative to Shield Building annulus air pressure.

A differential pressure greater than 0.3 psid (annulus pressure greater than containment pressure) will close a contact on the differential pressure switch to energize the solenoid pilot valve. This will supply air to the piston operator causing the valve to open. This open signal dominates the signals from containment isolation or the control switch so they are prevented from closing the valve. Under these conditions, air will flow from the annulus into containment equalizing the pressure.

Between a pressure difference of 0.3 psid to 0.2 psid, the vacuum relief valve will remain open if already open, using a second differential pressure switch contact and a seal in signal from a valve limit switch contact. This prevents valve chatter. When the differential pressure falls below 0.2 psid, the containment isolation and control switch signals are enabled, and the valve will close automatically if a containment isolation signal is present. For normal operation, the control switch will control valve position according to the last position OPEN or CLOSED selected prior to placing the switch in AUTO.

The vacuum relief valve may be opened at any time if the control switch is held in its OPEN position. Should this be done at a time when the pressure within the Containment is greater than that in the annulus, passage of air out of the Containment is prevented by the swing check valve that is in series with the vacuum relief valve.

5.4.3.3 Testing

The vacuum breaker assemblies have a test connection in the piping between the isolation valve and the vacuum breaker valve. Since the isolation valve will normally be closed, air pressure can be applied to the space between the vacuum breaker and isolation valves at any time to test for leakage. The vacuum breaker isolation butterfly valve flange faces and the flange face of the self actuating swing disc check type vacuum breaker valves are provided with double o-ring seals and pressure test connections to the space between the o-rings to allow testing of o-ring seal integrity.

The self actuating swing disc check type vacuum breaker valves are equipped with externally mounted, air actuated, spring loaded, fail safe mechanism for testing the valve from a

remote location during plant operation. Limit switches on the valves will actuate lights in the Control Room to indicate fully open and fully closed positions of the valve discs.

Test circuits in the differential pressure control for the vacuum-breaker isolation butterfly valves permit periodic testing of these valves while the plant is operating. Limit switches on the valves will actuate lights in the Control Room to indicate fully open and fully closed positions of the vacuum-breaker isolation butterfly valves.

Test connections have been provided in the Class 1 tubing to allow leak testing of the reservoir components. This will allow periodic testing to verify the required capacity for valve operation.

The self-actuating swing disc check type vacuum breaker valves are provided with a lever assembly and weights to determine the force necessary to crack the valve open and the force necessary to hold the valve in the full open position.

5.4.3.4 Single Failure Analysis

Table 5.4-3 lists the instruments and components for the vacuum relief valves. As indicated, the valves are completely redundant. Since only one valve is required to protect the Reactor Containment Vessel against excess differential pressure, the single failure criterion is met. The swing check valve assures that passage of air out of containment is prevented when containment pressure is greater than that in the annulus.

5.4.3.5 Performance Analysis

The results of the containment vacuum breakers analysis, with one valve designed to open fully when a differential pressure of 0.5 psi is sustained across the system, are summarized in Table 5.4-1 and Table 5.4-2 and are presented graphically in Figure 5.4-3 and Figure 5.4-4.

The following assumptions were used for the analysis:

- No heat energy is being added to the containment atmosphere
- Two Containment Vessel Internal Spray Systems are operating at 1300 gpm each with water at 55°F;
- Four fan-coil units are operating with a cooling water flow rate of 500 gpm each, with inlet water temperature at 32°F;
- Initial ambient conditions, both inside the Reactor Containment Vessel and within the Shield Building annulus, are 120°F and 14.7 psia.

5.4.3.6 Discussion

The analysis indicates that one vacuum relief system, designed to open fully when a 0.5 psi pressure differential is sustained across the system is sufficient to prevent the Reactor Containment Vessel from exceeding the maximum permissible external/internal pressure differential (0.8 psi).

Concurrent with the vacuum relief of the Reactor Containment Vessel, the pressure in the Shield Building annulus is also reduced resulting in an external/internal pressure differential that is well within the design conditions for the Shield Building.

The analysis has been based on conservative assumptions, namely:

- No heat sources are assumed within Containment. Such condition would not normally occur coincident with such low cooling-water temperature and 120°F initial ambient air conditions;
- No credit is taken for heat transferred from the steel shell and surfaces of the Containment vessel during the transient;
- The unlikely occurrence of simultaneous operation of spray system and fan coil system under non-accident conditions because of the separation of actuating controls.

Table 5.4-1[a]
Containment and Annulus Pressure Transients at Normal Operations Conditions (Subject to a Simultaneous Operation of all Cooling Units with One Vacuum Relief System)

Time Following the Incident in Seconds	Containment Pressure Pc, psia	Annulus Pressure Pa, psia	Pressure Differential Pa-Pc, psi	Remarks
0	14.7	14.7	0	Initial conditions all cooling units beginning to function simultaneously.
13.4004	14.2	14.7	0.5	Vacuum relief system starts to function with valves full open
40.6004	13.659	14.422	0.63	
54.3004	3.514	14.297	0.783	Maximum pressure differential across the system
100.0004	13.319	14.005	0.686	
200.5004	13.379	13.834	0.455	
600.5004	14.010	14.175	0.165	
800.5004	14.241	14.339	0.098	
1000.5004	14.419	14.476	0.057	
1200.5004	14.555	14.586	0.031	
1522.004	14.698	14.698	0	Lowest attainable conditions.

a. Refer to WPSC Calculation No. C10942 for analysis.

Table 5.4-2[a]
Containment and Annulus Temperature Histories at Normal Operating Conditions (Subject to a Simultaneous Operation of All Internal Cooling Units With One Vacuum Relief System)

Time Following the Incident Seconds	Containment Temperature °F	Annulus Temperature °F
0	120	120
13.4004	100.28	120
40.6004	76.16	116.81
54.3004	68.98	115.37
100.0004	56.61	111.96
200.5004	50.25	109.93
600.5004	50.23	113.95
800.5004	50.72	115.86
1000.5004	51.13	117.43
1200.5004	51.47	118.70
1522.0004	52.25	119.99

a. Refer to WPSC Calculation No. C10942 for analysis.

Table 5.4-3
Vacuum Relief Valve Components

	Train A	Train B
Vacuum Relief Valve	CV31337 (RBV2-1)	CV31338 (RBV2-2)
Solenoid Pilot Valve	SV33291	SV33292
Control Switch	ES46828	ES46829
Differential Pressure Switch	DPS16427	DPS16428
Swing Check Valve	CV31339 (RBV1-1)	CV31340 (RBV1-2)

Figure 5.4-1 Containment Vessel Air Handling System Flow Diagram

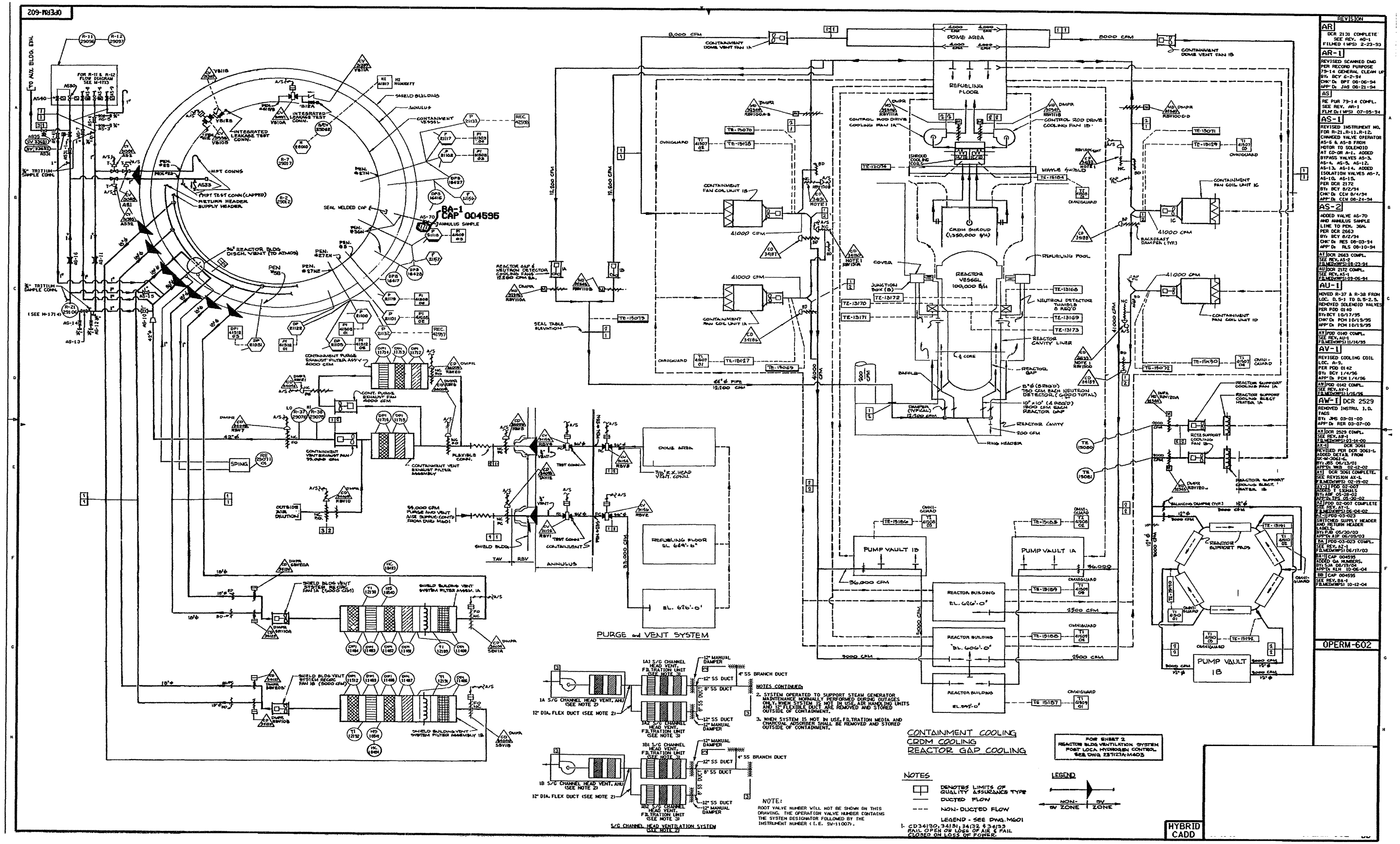

Intentionally Blank

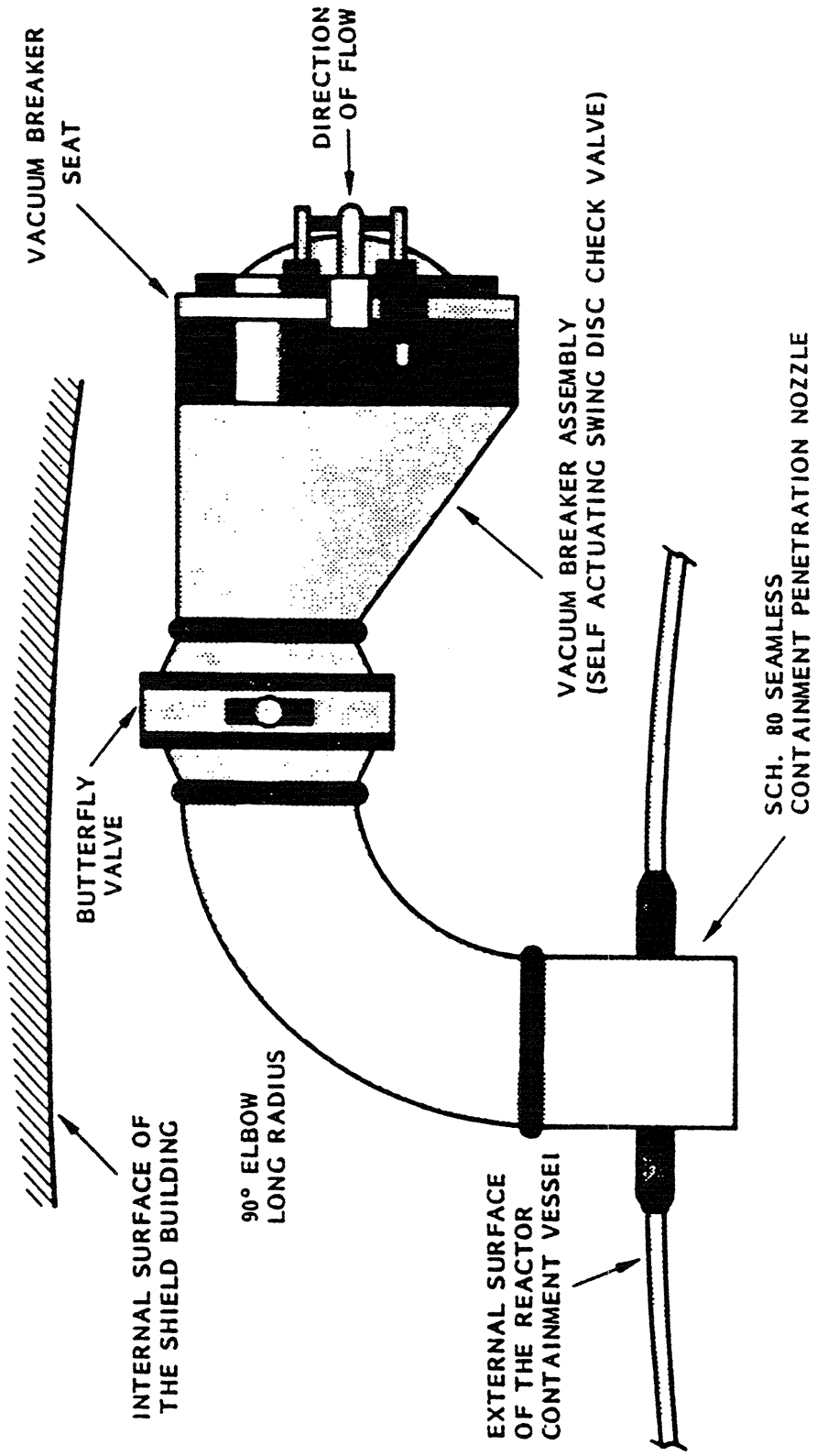

Figure 5.4-2 Vacuum Relief System Typical Assembly

Figure 5.4-3 Containment and Annulus Pressure Transients*

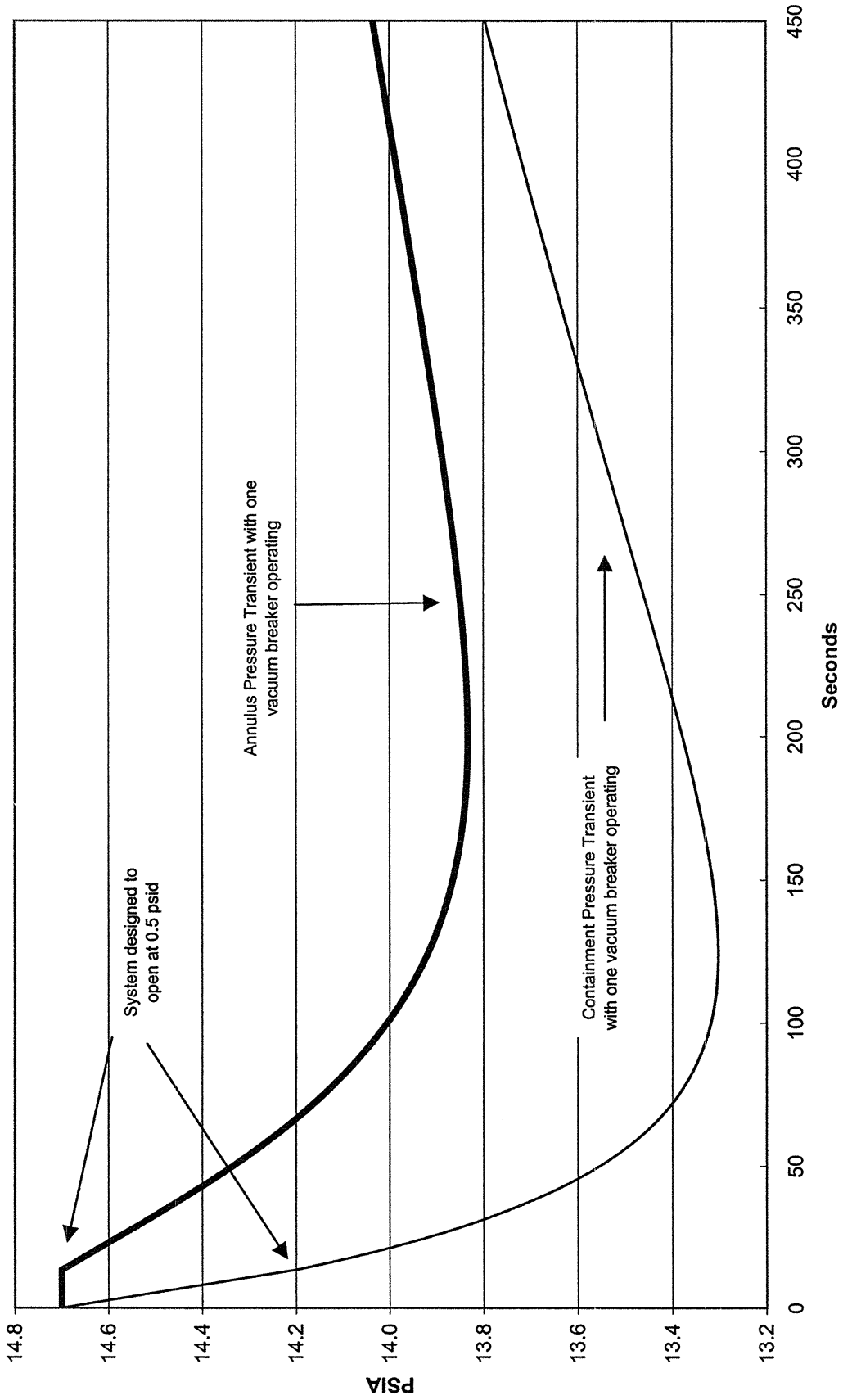

* Refer to WPSC Calculation No. C10942 for analysis

Figure 5.4-4 Differential Pressure Across Containment Vessel*

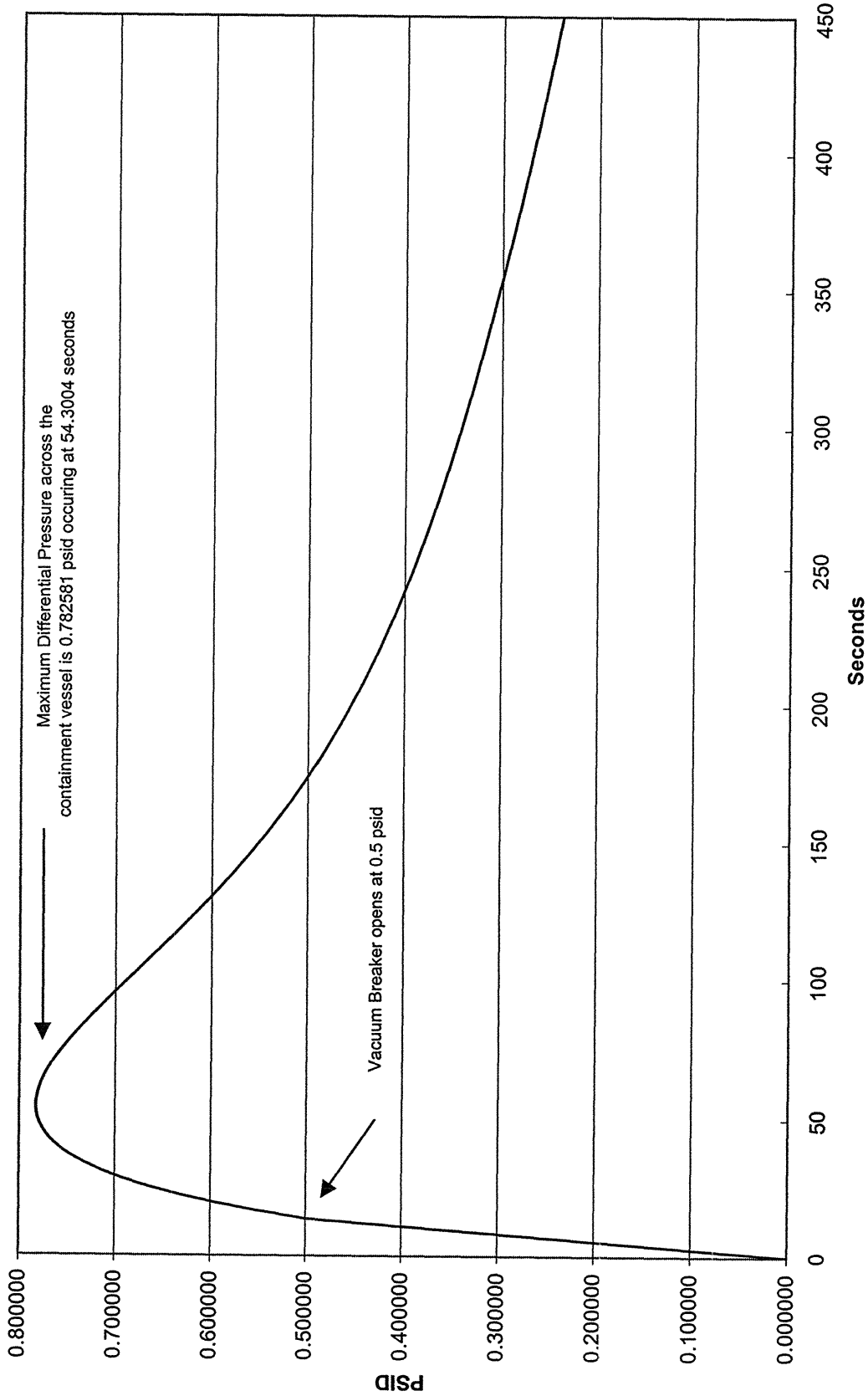

* Refer to WPSC Calculation No. C10942 for analysis.

Intentionally Blank

5.5 SHIELD BUILDING VENTILATION SYSTEM

5.5.1 Design Conditions

The SBV System is a system of fans and ducts for collecting the leakage from the Reactor Containment Vessel penetrations into the annulus of the Shield Building and discharging it through filters (particulate-absolute-charcoal) to the monitored Containment System Vent.

The Shield Building Ventilation System is not used except for testing during normal operation of the plant. Dampers located in the system prevent the flow of air through the filters from wind-induced pressure gradients. The filters are thereby retained in a fresh, unloaded condition for maximum efficiency during post-accident usage. The Shield Building Ventilation System discharge dampers are opened and fans are started by the Safety Injection Signal.

The Shield Building Ventilation System is designed to provide three functions. The first function is to produce a negative pressure within the annulus immediately following the LOCA. The second function is to ensure the mixing of any Reactor Containment Vessel penetration leakage into a large portion of the Shield Building annulus, thereby avoiding potential direct streaming of the radioisotopes to the exhaust duct and hence increasing holdup within the annulus. The third function is to provide long-term cleanup of fission products from the annulus air by recirculation after the LOCA.

The normal temperature of the air within the Shield Building annulus is approximately the same as the temperature of the air within the Reactor Containment Vessel. In the event of a LOCA, the air temperature would increase as the Reactor Containment Vessel shell temperature increases. The resultant thermal expansion of the air would pressurize the annulus during the first few minutes after the postulated accident unless suitably relieved.

The SBV System, as part of its design function to produce a negative pressure, must relieve any effects of thermal expansion that could cause uncontrolled out leakage from the Shield Building.

The pressure transient in the annulus poses no structural hazard to the Reactor Containment Vessel or Shield Building. Since the pressure increase in the annulus results from the pressure and temperature transient imposed on the Reactor Containment Vessel internal pressure will be positive with respect to the external (annulus) pressure. The Shield Building is capable of structurally accommodating any foreseeable pressure transient of the annulus air.

The amount and rate of the thermal expansion of the air during this initial period are dependent upon the rate of rise in temperature of the Reactor Containment Vessel shell and the rate of heat transfer from the shell to the air in the annulus. The rate of venting is set by the flow resistance of the filters and the vent ducting and the characteristics of the SBV fan, which acts as an exhaust fan until the annulus reaches a sub-atmospheric condition and the recirculation

dampers open. While thermal expansion continues, the fan exhausts the excess volume of air and maintains a negative pressure in the annulus. The negative pressure is sufficiently low so that no internal effects will cause a localized area of the annulus to return to a positive pressure.

When the annulus has been drawn to a negative pressure, the SBV fan will then recirculate the air within the annulus to ensure mixing as well as continue exhausting a portion of the fan capacity to offset the Shield Building in-leakage and maintain vacuum in the annulus. In-leakage to the annulus is mixed with annulus air and drawn through the filter units to the monitored Containment System Vent. The recirculation fan continues to partially recirculate the contaminated air of the annulus through the filters for long-term clean up during the post-accident period.

5.5.1.1 Design Bases

The SBV System is designed to relieve the post-accident thermal expansion transient of the Shield Building atmosphere without permitting the pressure in the annulus to exceed the design basis positive pressure at any time during the first several minutes. This design will also maintain a negative pressure in the annulus with respect to the Auxiliary Building at all times following this initial expansion.

The rate of expansion was calculated utilizing the containment shell temperature curve resulting from containment pressure transient studies with only one containment pressure-reducing system operative.

The capacity of the SBV fan was selected to return the annulus to a negative condition within three minutes after one SBV fan is started. The flow capacity of the filter is selected to match the capacity of the fan and the charcoal bed is sized to assure adequate capability for removing the long-term leakage of radioiodine.

The heating elements were designed to produce a relative humidity of 70 percent or less at the charcoal bed with 100 percent relative humidity in the air entering the filter at rated conditions. Under degraded grid conditions the heating elements will have a reduced output, however, calculations show that in a DBA insufficient moisture is available to have relative humidity greater than 70 percent. Heat contribution to the Shield Building atmosphere, in the event of heater malfunction is extremely small when compared to the overall heat contribution from the containment vessel itself following a LOCA. Heaters are interlocked with the fans, such that they are de-energized when the respective recirculation fan is tripped.

The original plant design included an exhaust fan for each train, which was designed to handle the in-leakage so that this design allowed the SBV fan to operate in a full recirculation mode after the initial drawdown of the annulus. The actual as-built Shield Building in-leakage was determined by test and was much higher than that used for initial design. Due to the inherent design characteristics of the system, part of the recirculation fan flow could also be continuously

exhausted, thus supplementing the capacity shortfall of the exhaust fan. The measured as-built leakage rate of the Shield Building is shown on Figure 5.2-14.

These higher than expected Shield Building leakage rates together with control problems (unrelated to the leakage) experienced with the original modulating check dampers, resulted in modifications to the SBV System. These modifications consisted of the removal of the exhaust fans, changing the modulating check dampers to control dampers controlled by the Auxiliary Building-to-Annulus differential pressure, installation of gravity check dampers, and changing the set-point for initiation of recirculation from -2.0 inches WC to -1.0 inches WC annulus pressure. The removal of the exhaust fans was done after system performance testing, which included determination of the Shield Building leakage rate. Based on the performance tests, a Modified Design Basis Leakage Rate was established to envelop the leakage rate determined by the tests. This modified design basis leakage rate is also shown on Figure 5.2-14.

During an internal review in 1989, it was determined that the function of the air-operated shut off dampers in the recirculation and exhaust flow paths were redundant to the gravity check dampers described above. Subsequently, the air-operated dampers and associated equipment were removed. This change simplified the SBV System, improving its overall reliability, with no impact on functionality.

5.5.2 System Description

The SBV System flow diagram is shown on Figure 5.4-1.

The vent system consists of two full-capacity, redundant, fan and filter systems, which share a common Containment System Exhaust Vent. The vent exhaust pipe is located in the Shield Building annulus and extends approximately five feet above the Shield Building. The fans and filters are located in the Auxiliary Building.

Each system is made up of a demister, pre-filter, electric heater, absolute filter, charcoal filter, a final absolute filter, and one fan. The fan is used for both the exhausting and recirculation functions. The discharge for each fan splits into two flow paths, the exhaust and recirculation paths, each sized to accommodate the full capacity of the respective fan. Each flow path contains a gravity check damper and a hydraulically operated control damper. The exhaust flow in each system is directed to the common Containment System Exhaust Vent, and the recirculation flow in each system is returned to the annulus through ducting located so as to enhance circulation within the annulus.

The control dampers in the SBV fan exhaust and recirculation flow paths modulate in response to a pre-set annulus negative pressure. After the initial drawdown of the annulus (i.e., the system has switched to recirculation mode of operation) the SBV System controls will maintain a pre-set annulus negative pressure by modulating the exhaust and recirculation dampers so as to provide sufficient amount of exhaust to offset the Shield Building in-leakage.

Check (Backdraft) dampers are provided in the SBV fan exhaust and recirculation ducts. The check damper in each of the recirculation fan exhaust ducts will prevent drawing outside air into the annulus via the exhaust stack after the annulus has been drawn negative in the event of fan failure. The check dampers in each of the recirculation ducts will prevent unfiltered out-leakage to the atmosphere while the annulus is at positive pressure immediately following the DBA.

5.5.3 Actuation and System Operation

Following a LOCA, the SBV Systems are placed into operation by the Safety Injection Signal. The signal causes the hydraulically operated exhaust control dampers in the discharge lines to the Containment System Vent to open. The fans are started early in the emergency power loading sequence for Engineered Safety Features. When the annulus pressure has been pulled down to the negative pressure set point, the annulus differential pressure switch output signal will open the hydraulically operated recirculation control dampers. A permissive switch on each recirculation fan allows the recirculation shut-off damper in that loop to open only if that respective fan is operating. A single differential pressure switch in each train will provide permissive for the exhaust and recirculation control dampers to modulate. These control dampers are interlocked so as to prevent them from modulating during the exhaust mode of operation (the exhaust control damper will remain fully open and the recirculation damper will remain fully closed).

The operation of the system, after initiation by either automatic or manual means, is as follows:

1. Initiating signal starts the Shield SBV fan.
2. Start of the fan will energize the filter heater, and open the filter inlet damper. The recirculation control damper will remain closed, and the exhaust control damper will be fully open.
3. The SBV fan, exhausting to atmosphere, will rapidly draw down the annulus; as annulus pressure decreases below the set pressure of the differential pressure controller, an interlock with a pressure switch (set at -1° WC) will prevent the exhaust control damper from modulating closed.
4. At -1.0 inch WC, the control dampers will receive permissive signals to modulate. Since the annulus pressure is lower than the set pressure for the differential pressure controller, the exhaust control damper will modulate to the fully closed position and the recirculation control damper will modulate to the fully open position.
5. When the annulus in-leakage has increased the annulus pressure back up to the set pressure of the controller, the control dampers will then be automatically positioned so as to maintain this annulus set pressure by allowing a portion of the SBV fan discharge to be exhausted to the atmosphere.

5.5.4 Component Design

5.5.4.1 Fans

The SBV fans are vane-axial, direct-connected fans of standard construction. The SBV is nominally rated at 5000 cfm.

5.5.4.2 Filter Assemblies

The filter assemblies are composite units consisting of a demister section, pre-filters, electric heating elements, HEPA filter section, impregnated charcoal filter section, and another HEPA filter section. Each section is designed as follows:

a. The heating coils are designed to increase the temperature of the incoming air by a sufficient amount to assure a 70 percent relative humidity entering the charcoal bed with 100 percent saturated air entering the demisters at nominal flow rates. Humidity sensing devices actuate an alarm if the relative humidity rises above 70 percent.

b. The high-efficiency particulate filters are designed to remove 99.97 percent minimum of particulate matter 0.3 micron or larger in size. The filters are water and fire resistant, and meet all requirements of AEC Health and Safety Bulletin 212-1965.

c. The iodine filter is an impregnated activated charcoal bed, capable of removing ≥ 90 percent radioactive methyl iodide when exposed to an atmosphere at 130°C, 95 percent relative humidity, for the Shield Building Ventilation System based on a filter depth of 2 inches and a residence time of 0.25 seconds. The ignition temperature for the charcoal used is greater than 640°F.

The particulate and charcoal filters have a nominal flow rating of 5000 cfm and are sized to retain the fission products released to the Shield Building following any of the postulated accidents without exceeding a loading of 10 mg/gm for elemental iodine or 3 mg/gm for organic iodine. For sizing criteria, it has been assumed that 10 percent of the total iodine will occur in the organic form.

Normally the filters are cooled by the air flowing through them. The results of an analysis of the charcoal filter ignition hazard are reported in Section 14.3.6.

To provide protection against fission product release due to high carbon temperatures in case of total loss of flow, a deluge system is installed in each filter assembly. The water spray is provided from the Service Water System and is actuated by Underwriters' Laboratories (UL)-approved heat sensing devices. Alarms in the control room notify the operator of system actuation.

5.5.5 System Evaluation

Post-LOCA annulus pressure transient analysis was performed for the modified system, using the modified design basis leakage rate for the shield building. The analysis was based on system friction losses and recirculation fan performance established during the SBV System performance tests. This analysis is described in detail in Appendix H.3. The results of the analysis depict the modified system design to be acceptable. Modified shield building post-LOCA pressure transient and exhaust flow rates are shown in Figure 14.3-24 and 14.3-25, respectively. The modified design basis leakage rate is shown in Figure 5.2-14.

The post-LOCA annulus pressure transient analysis for the modified system used the same containment heat input into the annulus and the same containment shell expansion as those used for the original plant design analysis, and was based on conservative assumptions as follows:

a. No out leakage from the annulus to the outside was assumed when the annulus pressure is above atmospheric pressure. Since the out leakage would contribute to the shortening of the “positive pressure duration” during the drawdown, the assumption of “no out leakage” is conservative, and will envelope any future reductions in annulus in-leakage through maintenance and/or replacement of degraded components, such as the hypalon boots on piping penetrations and door seals on the Shield Building and filter assemblies. However, once the annulus has been drawn down to sub-atmospheric condition the new design basis Shield Building leakage rate was utilized in the analysis.

b. The performance test data did not necessarily correspond to the damper fully open conditions. Since the DP for a damper is small compared to the other system losses, a somewhat conservative result was realized in establishing the system resistance factors from the test data.

c. The filter assembly dirty condition DP used in the analysis was 12.4" WC at 5000 cfm (SBV fan design capacity), which includes the Technical Specification limit of 10" WC across the combined HEPA/carbon filters plus allowance for a DP across the moisture eliminator, heater and pre-filter.

d. Any in-leakage through the filter housing was assumed to leak directly into the annulus, thus increasing the flow rate in the ductwork between the annulus and filter assembly, with a consequentially slightly higher system DP.

The analysis as shown in Figure 14.3-24, was performed for a bounding case of -1.0" WC initial drawdown and a subsequent controlled pressure of -1.0" WC. The system, however, is provided with a readily adjustable controller setpoint for maintaining the annulus pressure, subsequent to the drawdown, between -0.25 and -1.0" WC.

5.5.6 Reliability and Testing

5.5.6.1 Quality Assurance

The following inspections and tests were performed to provide assurance that the functional intent of the system is achieved during the manufacture of the components and the construction of the filter systems:

a. All ducting and filter assemblies were given a pneumatic pressure test and leak test;

b. Each filter assembly received a filter performance test. Each HEPA and charcoal filter bank was tested in place to verify performance;

c. Dimensional tolerances on filter assemblies and frame assemblies were checked to assure that suitable gasket compression was uniformly achieved on the filter sealing faces;

d. The manufacturer has demonstrated, by testing charcoal essentially identical in composition to that furnished with the filter assembly, that the charcoal bed is capable of removing 99.9 percent of molecular iodine - 131 in the presence of a gaseous concentration of 50 mg per m_3 of non-radioactive molecular iodine or 95.0 percent of methyl-iodide - 131 in the presence of a gaseous concentration of 5 mg per m_3 of non-radioactive methyl iodide. This performance level was maintained until the amount of non-radioactive I_2, which reached the test unit, was equivalent to 100 gm in the full-scale system. Following this loading, air at 70 percent RH and 150°F was drawn through the test unit at its rated flow for two hours. The integrated I_2 131 removal efficiency for the test unit, including both iodine feed and elution periods was no less than 95.0 percent of the methyl iodide - 131. The I_2 - 131 and CH_3-I-131 activity during feed periods was between 10 and 100 millicurie/gm of non-radioactive I_2 fed.

5.5.6.2 System Tests

In order to prove satisfactory operation of the modified SBV System, system testing was conducted for the following purposes:

a. To demonstrate functional operability of the SBV recirculation fan exhaust and recirculation control dampers and their respective controls and capability of the control system to maintain an equilibrium Auxiliary Building-to-Annulus differential pressure.

b. To demonstrate that the modified system's annulus drawdown time has not changed substantially from the values established during the previous periodic tests of the SBV System.

c. To determine the effect of deletion of the exhaust fan on system and recirculation fan performance.

The modified SBVS testing was performed during refueling shutdown with the reactor containment and shield building integrity established. The exhaust fans were still in the system. However, the testing was done with the exhaust fans off, as well as with the exhaust fans running.

a. The new control system operated as expected during the drawdown transient to -2.0" WC annulus pressure and subsequent pressure increase back up to the set pressure of the controller. There was a slight overshoot of the set-pressure by approximately 0.25" WC, before the control system settled to steady state operation; observations of the annulus pressure and control damper positions indicated a very stable operation. This was performed for each of the two redundant trains. In addition, both trains were run simultaneously, which also showed a very stable steady state operation; due to a slight difference in the set points between the two controllers, one train was in full recirculation, while the other train was split between exhaust and recirculation.

b. The drawdown time to -2.0" WC with the exhaust fan running was essentially the same as the values established during the previous periodic tests.

c. The drawdown time to -2.0" WC with the exhaust fan not running was timed to be slightly longer (approximately 5 percent longer) than the drawdown time with the exhaust fan running.

5.6 LEAKAGE MONITORING

The Reactor Containment Vessel steel shell, its structural integrity, and acceptance leakage rate tests are described in Section 5.2.1 and Section 5.7.1. The Reactor Containment Vessel is conservatively designed in accordance with the ASME Code for nuclear vessels and was rigorously analyzed for loading conditions of a highly improbable hypothetical accident as well as all other types of loading conditions that could be experienced. All seam welds for the steel shell were 100 percent radiographed. All penetration sleeves were welded into the shell and were radiographed or inspected by dye penetrant methods where radiographic methods could be ambiguous or difficult to interpret.

The Reactor Containment Vessel structural integrity test was performed at an over-pressure in accordance with the ASME Code. This test was performed at 125 percent of design pressure (51.8 psig). The initial acceptance leak rate test was performed at 46.0 psig and the leak rate was less than 0.02 percent (free volume) in 24 hours. A second Reactor Containment Vessel structural integrity test was performed after all of the internal concrete structures had been placed inside the Containment Vessel.

The Reactor Containment Vessel has been designed so that integrated leakage rate testing can be conducted at containment maximum internal pressure after completion and installation of all penetrations. The Reactor Containment Vessel is designed so that integrated leak rate testing can be performed during plant lifetime.

Penetrations containing expansion bellows or resilient seals are provided with a pressure tap to the volume between seals for pressurizing to 46 psig, equivalent to containment “maximum internal pressure” for a periodic leak rate test to assure that no deterioration of the bellows or seal has occurred. The large access openings such as the equipment hatch and personnel air locks are equipped with double-gasketed seals. The space between the seals can be pressure tested.

Capability has been provided to the extent practical for testing functional operability of valves and associated apparatus essential to the containment function, to establish that no failure has occurred and to determine that valve leakage does not exceed acceptable limits. Testing of these isolation valves can be performed during periods of reactor shutdown.

Initiation of containment isolation employs coincidence circuits which allows checking of the operability and calibration of one channel at a time. Removal or bypass of one signal channel places that circuit in the half-tripped mode.

Local leak tests of containment isolation valves are performed as required during periods of reactor shutdown in accordance with 10 CFR 50, Appendix J.

The sensitivity of main steam line isolation valve stem leakage (assuming primary-to-secondary leakage – 0.1 to 1 gpm) to the total radiological consequences from a

LOCA or steam line break was evaluated. For a LOCA or steam line break, the main steam line isolation valves close within five seconds after the initiation of the actuating signal. This isolates the steam generator or generators at pressure. The valve stem leak rate considered 0.1 SCF of air/hr per inch of stem diameter is the maximum allowable leak rate specified in the engineering specifications.

Following a LOCA, the primary system is rapidly depressurized and any leakage through steam generator tubes would be from the secondary side to the primary side until the pressure equalizes. In the case of a smaller break the primary system depressurizes at a slower rate, but in a matter of minutes the primary pressure is below that of the secondary side. No valves downstream of the main steam line isolation valves are considered in this evaluation.

For the steam line break, an inside break with loss of offsite power was considered since, for this accident, there is a direct leak path from the Containment to the environment through the valve. For this evaluation, there is a steam dump from the non-affected steam generator for eight hours following the incident and there is no core damage.

The evaluation results indicate that for both the LOCA and steam line break, the off-site dose contribution due to main steam line isolation valve stem leak is negligible when compared to the total off-site dose. This means that a main steam line isolation valve stem leak rate orders of magnitude higher than allowed by the engineering specifications can be tolerated.

Valves in the Emergency Core Cooling Systems (Safety Injection and Residual Heat Removal) are not considered to be isolation valves in the usual sense inasmuch as the system would be in operation under accident conditions.

5.7 TESTS AND INSPECTIONS

5.7.1 Reactor Containment Vessel

5.7.1.1 Pre-Operational Quality Assurance and Testing

5.7.1.1.1 General Requirements

Test, code cleanliness, and Quality Assurance requirements accompanied each specification or purchase order for work materials and equipment. Tests performed by the supplying manufacturers are enumerated in the specifications together with the requirements, if any, for test witnessing by an inspector. Fabrication, including final cleaning and sealing, is described together with shipping procedures. Standards and tests are specified in accordance with applicable regulations, recognized technical society codes, and current industrial practices.

5.7.1.2 Quality Assurance

Fabrication procedures, non-destructive testing, and sample coupon tests for the Reactor Containment Vessel were in accordance with the ASME Code for Boilers and Pressure Vessels, Section III, Subsection B.

All materials incorporated into the Reactor Containment Vessel and airlocks were subject to inspection at mill, shop and field, and all materials conformed to the testing requirements of the ASME Code. All seam welds for the Reactor Containment Vessel were 100 percent radiographed. All penetration nozzles were welded into the shell and were radiographed or inspected by dye penetrant methods where radiographic methods could be ambiguous or difficult to interpret.

The Reactor Containment Vessel design, fabrication, material and testing conformed to all the requirements of the ASME Code and the ASME Code stamp of acceptance has been issued for and applied to the Vessel.

5.7.1.3 Initial Testing

The Reactor Containment Vessel and airlock specifications required acceptance testing, and this has been carried out on the constructed Reactor Containment Vessel prior to installation of internals and penetrations.

These tests in October 1969 included soap bubble tests at 5 psig and 46 psig, an over-pressure test at 51.8 psig, and an integrated leak test at 46 psig.

After successful completion of the initial soap bubble test, the pneumatic pressure structural test was made on the Reactor Containment Vessel and each of the personnel air locks at a pressure of 51.8 psig. Both the inner and outer doors of the personnel air locks were tested at this pressure.

The over-pressure test was in accordance with the requirements of Paragraph UG-100 of Division 1, Section VIII of the ASME B&PV Code. The test pressure is determined in accordance

with the rules of Paragraph N-1314(d) of Section III and Paragraph UG-100(b) of Section VIII of the code as follows:

- Test Pressure [Paragraphs N-1314(d) and UG-100(b)] --1.25 x 41.4 = 51.8 psig

Following the successful completion of the soap bubble and initial over-pressure tests, the leak test at 46 psig pressure was performed on the Containment Vessel with the personnel air lock inner doors closed.

Pressure was maintained for the length of time required to demonstrate full compliance with air tightness requirements.

The leak rate was determined by the "Reference System Method" which consists of measuring the pressure differential between the contained air and that of a hermetically-closed reference system within the Reactor Containment Vessel. The "Absolute Method" which consists of measuring the temperature, pressure and humidity of the contained air, and making suitable corrections for changes in temperature and humidity was used to confirm the results. The results of both methods were in agreement.

Continuous hourly readings were taken until it was satisfactorily shown that the total leakage during a consecutive 72-hour period did not exceed 0.15 percent of the total contained weight of air. The actual loss per 24 hours was less than 0.02 percent.

After placement of external support concrete, removal of temporary stiffeners, T-ring girder and pipe columns, and placement of internal support concrete (stiffener for knuckle), but prior to fueling the reactor, the over-pressure test was performed a second time to provide assurance that removal of the stiffeners or other changes in the system during construction have not compromised the structural integrity of the Reactor Containment Vessel.

5.7.1.4 Leak-Tight Integrity Tests

Pre-operational leak tests, March through June 1973, were performed after all penetration connections; support and internal concrete and all equipment were installed, prior to fueling the reactor.

The objectives of these tests were:

a. To determine the initial integrity leak rate for comparison with the 0.5%/24 hours by weight at 46 psig specified as the maximum permissible;

b. To determine the characteristic leak rate variation with pressure so as to allow re-testing at pressures less than design pressure;

c. To institute a performance history summary of both local leak and integrated leak rate tests.

The guidelines established for the tests were:

a. The methods and equipment used during the initial tests are such that they can be used for subsequent re-tests, thus avoiding test result variations due to changes of the methods or equipment;

b. The leak-test equipment is calibrated before the initial test and, if the equipment does not remain in place for subsequent re-tests, it is replaceable with either a similar calibrated device or made such that it can be re-calibrated in place;

c. The equipment consists of the necessary flow meters, pressure, temperature, and moisture sensors;

d. The leak rate was determined in accordance with the requirements of 10 CFR 50, Appendix J.

Prior to the integrated leak rate test, local leak tests were made on electrical penetrations, piping penetrations, across valve seats and along valve stems, and on equipment and personnel hatches were those items were a part of the containment envelope during the Design Basis Accident. The test methods used were "soap bubble," halogen leak detectors, pressure decay or rise, rotameters, or sonic detection, as appropriate for the individual item being tested. The containment pressure was then increased for the second over-pressure test.

Subsequent integrated (Type A) and local (Type B and C) leakage rate tests are in accordance with the requirements of 10 CFR 50, Appendix J and detailed in Technical Specifications, Section 4.4 (Reference 20 and Reference 21).

5.7.2 Shield Building

5.7.2.1 Pre-Operational Testing and Inspection

5.7.2.1.1 General Requirements

Appropriate ASTM Material Specifications are cited in the Building Specifications for all construction materials, which describe the testing and basis for acceptance of materials. Standards and tests are specified in accordance with applicable regulations and current building practices. The testing of concrete and reinforcing bar welding is referred to in Section 5.2.2.

Inspections were performed as necessary to verify compliance with specifications.

5.7.2.2 Leak Tightness

It should be noted that the Shield Building has no significant pressure-containing function and therefore, except for attention to good leak-tightness, standard building construction and quality control practices are satisfactory. The leak tightness was determined concurrently with the testing of the Shield Building Ventilation System, as described in Section 5.5.

5.7.3 Auxiliary Building Special Ventilation Zone

5.7.3.1 Pre-Operational Testing and Inspection

5.7.3.1.1 General Requirements

Appropriate ASTM Material Specifications are cited in the Building Specifications of all construction materials, which describe the testing and basis for acceptance of materials. Standards and tests are specified in accordance with applicable regulations and current building practices. The testing of concrete and reinforcing bar welding is referred to in Section 5.2.2.

5.7.3.2 Leak Tightness

The Auxiliary Building Special Ventilation Zone boundary requires only moderate attention to good leak-tightness due to the large capacity of the Zone SV exhaust fans and therefore standard building construction and quality control practices are satisfactory.

Provisions had been made to test the leak tightness of the Auxiliary Building Special Ventilation Zone. The leak tightness was determined concurrently with the testing of the Auxiliary Building Special Ventilation System, as described in Section 9.6.5.

5.8 SYSTEM EVALUATION

The SBV System in the event of a LOCA; will produce a vacuum in the Shield Building annulus and will cause all leakage from the Containment Vessel to be mixed in the annulus volume, and recirculated through a filter system before its deferred release to the environment through the exhaust fan that maintains vacuum.

The free-standing Reactor Containment Vessel is designed to accommodate the maximum internal pressure that would result from the DBA. For initial conditions typical of normal operation, 120°F and 15 psia, an instantaneous double-ended break with minimum safety features effectiveness results in a peak pressure transient as presented in Section 14.3.4, Containment Integrity Evaluation.

The Reactor Containment Vessel has been successfully strength-tested at 51.8 psi and leak-tested at 46.0 psi to meet acceptance specifications previous to installation of penetrations.

Section 14.3.5, Off-Site Dose Consequences is based on a conservatively chosen reference set of assumptions regarding the sequence of events relating to activity release and attainment of vacuum in the Shield Building annulus, the effectiveness of filtering, and the leak rate of the Containment Vessel as a function of time.

The initial leak rate in this analysis is 0.5 weight percent of air per 24 hours at the peak containment pressure of 46 psig. The resulting doses are less than the guidelines presented in 10 CFR 50.67.

Intentionally Blank

5.9 INTERNAL STRUCTURES

NOTE: In 2001, Kewaunee Nuclear Power Plant replaced the original Model 51 steam generators with Model 54F steam generators. The relevant changes that the replacement steam generators produce on the primary system include a decrease in the resistance to primary flow (and therefore an increase in the primary flow rate) and an increase in the primary volume (more tubes have been added to the replacement steam generators). The resistance reduction results from a 6 percent increase in tube flow area within the steam generator. The associated primary flow rate increase is calculated to be 6 percent. The primary volume increase is 3 percent within the steam generator and 1.2 percent considering the total primary system volume. Since the subcompartment pressurization rate and peak pressures resulting from a leak in the primary piping or surge line could be impacted by the flow resistance in the lines and the total primary side volume, a change to these values would be possible if the LOCA analysis were to be redone. The impact is minimal based on the magnitude of the resistance and volume changes and the fact that the key driving factors (pipe diameter and pressure difference) remain unchanged. Therefore, the analysis for subcompartment pressurization for the original steam generators, as described in the following sections, remains a bounding analysis. Instead of re-performing this analysis, KNPP used the leak-before-break provision of General Design Criterion 4 and KNPP's design basis (Reference 14, Reference 15 and Reference 19).

Subcompartment pressurization for the breaks of smaller primary lines remain bounded by the existing primary loop LOCA analysis results. The next largest diameter branch connection off of the primary loop piping is the 12 inch Safety Injection line. Since flow rate (and resulting pressure buildup) in subcompartments is proportional to the pipe flow area (note that the pressure difference would remain the same), and since the 12 inch diameter pipe has a flow area of about 1/7 of the 31 inch pipe, the pressure buildup inside containment for a pipe break of a 12 inch pipe is significantly less than that for the 31 inch pipe. The minor changes caused by the changeout of the steam generators have no impact on this conclusion and the existing LOCA analysis easily bounds the results for the smaller diameter pipes.

5.9.1 Description

The Reactor Containment Vessel contains the reactor cavity, which houses the reactor pressure vessel, two reactor coolant system compartments, a refueling cavity, which is located between the primary coolant compartments and above the reactor cavity, and miscellaneous equipment rooms and work areas (see Figure 5.1-1).

5.9.2 Design Basis

The reactor cavity, the Reactor Coolant System compartments, and all equipment rooms housing Class I components or systems as defined in Appendix B, are designed as Class I structures. The design criteria for structures as described in Section B.6 of Appendix B is

applicable with the exception of environmental loads such as snow, wind and tornado, which do not affect containment internal structures.

The design has been performed in accordance with the applicable portions of the following design codes:

- American Concrete Institute Code 318 “Building Code Requirements for Reinforced Concrete,” 1963 Edition
- American Institute of Steel Construction “Specification for the Design, Fabrication and Erection of Structural Steel Buildings,” 1963 Edition
- American Welding Society Code D 1.0 “Standards for Arc and Gas Welding in Building Construction”
- International Conference of Building Officials “Uniform Building Code,” 1967 Edition
- Atomic Energy Commission publication TID 7024 “Nuclear Reactors and Earthquakes”

The design pressure differentials across walls and slabs of the enclosed compartments in the internal structure have been calculated for the hypothetical double-ended pipe rupture at any location within the RCS compartments or within the piping penetration of the reactor cavity shield up to the last field weld on the RCS piping. The pressure differentials used for this design are:

- Reactor Cavity (Nozzles) - 475 psia
- Reactor Vessel Gap - 100 psia
- Reactor Steam Generator and Pump Vaults - 25 psia

In addition to the peak pressure differentials, the RCS compartment walls are designed for simultaneous action of a single jet impingement load and the OBE.

The supports for all NSSS equipment including the reactor pressure vessel, the steam generators, the primary coolant pumps and the pressurizer are designed to remain within the elastic range following the rupture of any pipe, except the reactor coolant loop piping and the pressurizer surge line, combined with the DBE. Elimination of postulated breaks in the reactor coolant loop piping is justified by application of “leak-before-break” technology in accordance with the limited 7 scope rule change of General Design Criteria 4 (51 FR 12502, dated 4/11/86). The analyses performed, which demonstrate leak-before-break in the reactor coolant loop, are reported in Reference 12 and Reference 13. NRC approval is provided in Reference 14 and Reference 15. Elimination of postulated breaks in the pressurizer surge line is justified by a leak-before-break analysis using methodology described in the Standard Review Plan (52 FR 32626, dated 8/28/87). The analysis, which demonstrates leak-before-break for the pressurizer surge line, is documented in Reference 18. NRC approval is provided in Reference 19.

The internal reinforced concrete and steel structures are designed using the working stress method, and are based on the allowable stresses as set forth in Table 5.9-1.

The design was reviewed to assure that any resulting deflections or distortions will not prevent the proper functioning of the structure or piece of equipment, will not endanger adjacent structures or components, will not allow the uncontrolled release of radioactive material, and will not prevent the safe shutdown and isolation of the reactor. Earthquake stresses were compared with stresses implied by the damping values used, to assure that the analysis was consistent.

The reactor cavity is designed to contain Safety Injection water up to the level of the reactor nozzles, and reduce the likelihood of secondary missiles during a pipe rupture.

Pipe whip restraints are provided, as required, to prevent consequential damage to the RCS, Engineered Safety Features systems, Containment Isolation Systems, and the Reactor Containment Vessel as the result of a double-ended rupture of high-pressure piping within containment (except the reactor coolant loop and the pressurizer surge line).

The design of the internal structures has been examined to assure that credible missiles from high-pressure equipment will not cause a loss of function within the structure, the Reactor Coolant System, the Containment Isolation Systems or the Reactor Containment Vessel. The principal barriers against missiles are the reinforced concrete biological shield, the shield walls around the RCA compartments, and miscellaneous local barriers. A removable steel plate is located above the reactor vessel head to block any missile that could be generated by a failure of the RCCA drive mechanism.

5.9.2.1 Reactor Coolant System Compartments and Refueling Cavity

There are two RCS Compartments each housing one loop of the primary nuclear steam supply components, namely; pressurizer, steam generator, and reactor coolant pump. The compartments are vertical vaults of reinforced concrete construction with flat walls having an irregular geometric wall configuration.

5.9.2.2 Loads

The vault compartment structure and refueling cavity are designed to carry the vertical and horizontal live and dead loads of adjacent floors and structures that are attached to it as well as its own live and dead loads and horizontal loads imposed on the compartment walls from the equipment components contained within and external to the compartments.

Also included in the Design are:

- Jet Load

  Jet impingement loads on compartment surfaces that are postulated to occur in the event of a pipe rupture.

- Internal Pressure

  Compartment internal pressure buildup that would occur during a LOCA blowdown. These loads are defined in Section 5.9.2.

- Pipe Rupture Reaction Load

  These are reaction forces on equipment and structures caused by a postulated pipe rupture, except ruptures in the reactor coolant loop piping and the pressurizer surge line.

- Thermal Load

  These are stress loads from thermal gradients through compartment walls that are caused by a LOCA.

- Residual Construction Loads

  These are internal residual construction stress loads resulting from the shrinkage of the various levels of construction pours of concrete.

- Refueling Cavity Pool

  Vertical pool water load and lateral hydraulic water pressure loads from water in the refueling cavity pool. These loads are treated as live loads since they will only occur during reactor shut-down.

- Seismic Loads

  Seismic loads are determined from the John A. Blume analysis (Reference 3) of the Reactor-Auxiliary-Turbine Buildings using data for the appropriate mass points under consideration.

5.9.2.3 Method of Analysis

The general structural model consists of a composite of the compartment walls, the adjoining biological shield, the attached floor systems and structures, and the refueling cavity pool.

The analytical model is broken down into two district interacting models (1) laminar horizontal frames analyzed by STRESS programs and (2) vertical structural elements analyzed to carry unbalanced load reactions to the base by the box girder action of the compartment walls.

This latter model could more aptly be described as a modified folded plate structure.

The local effects of forces are analyzed by considering loading conditions on simplified but conservative models limited to the immediate and close by adjoining areas of loading.

The above described analysis results were later confirmed by an independent finite element method of analysis that indicated conservative margins in the results of the original analysis on the order of 30 percent and greater.

5.9.2.4 Design

Concrete structures are designed in accordance with the working strength design methods of the ACI-318 Code.

Concrete is specified to attain a minimum strength of 4000 psi in 28 days. Reinforcement is ASTM-A615, Grade 60. No bar sizes greater than No. 11 are used. No welding of reinforcement was permitted.

In those portions of concrete structures subject to dynamic loadings and having heavy tensile reinforcement, particular attention was given to enhance the ductility of the concrete by the addition of stirrup systems (Reference 10).

5.9.2.5 Design Criteria

The design stress limits for the various design condition categories are shown on Table 5.9-2. This criteria is in accordance with Section 5.9 and Section B.6.

Criteria and stress limits are shown for reinforced concrete and structural steel. Structural steel criteria and stress limits applies to those members that are a functioning integral part of the compartment structure system, i.e.; embedded items, structural wall-tie members, etc.

Pipe rupture reaction forces and resulting jet impingement loads will act on limited extents of the structures. Because of the instantaneous nature of these loads they can produce very high local stress concentrations on parts of the structures. Accordingly, these loads require a somewhat different treatment than categories 1, 2, & 3. Table 5.9-2 has been expanded to include category-4, “Pipe Rupture Reaction Loads and Jet Loads.”

This category will include the local effects of pipe rupture reaction loads and jet forces. The criteria and increased stress limits presented in this category take into account the self-equilibrating nature of these localized stresses. This is analogous to the techniques employed in the design of pressure vessels. The design stress limits indicated are consistent with the design margins used throughout the plant.

Because of the time related effects of the reaction forces induced by a pipe rupture when considered simultaneously with internal compartment pressure buildup from a LOCA blowdown, two limiting loading conditions were established for category-4, as shown in Table 5.9-2.

5.9.2.6 Design Verification

Subsequent to the design process, an analysis was performed which used as-built data to verify the adequacy of the design for the Reactor Coolant System compartments.

5.9.2.7 Analysis Model

A five-volume model was used to calculate the peak differentials for the steam generator vault. The volumes represented were the dome, the base compartment, the foundation void and the two steam generator vaults. Time dependent equations of conservation of mass, energy and momentum, and the equation of state were used in the calculation. Flow inertia effects between the volumes were calculated. This model calculated critical flow conditions for application under high pressure differentials. The model assumed 100 percent entrainment of the water, which emerges from the break. The time intervals used in the calculations up to the time of the peak differential were one millisecond steps.

The pressures in the pipe annulus and reactor annulus were established through a steady state analysis of the peak mass and energy flow in the region. This study utilized two-phase critical flow relations. The pressure in the compartment below the reactor was established by addition of a sixth volume, representing this compartment, to the model used to calculate the peak differentials of the steam generator vaults. A steam and energy flow was input to this new volume to calculate the resultant peak differential. The time interval in use when the peak pressure was calculated was four milliseconds, although the time steps of one millisecond and two milliseconds were used earlier in the transient. The lengthening of the time step is due to the low rate of change of the blowdown after initial flow rise through the break. The shorter time steps are used to follow the rapidly changing portion of the blowdown.

5.9.2.8 Analysis Assumptions

The steam generator vaults of the Kewaunee plant, shown schematically in Figure 5.9-1, have been analyzed to determine the peak pressure differentials. The peak differentials have been calculated for a double-ended rupture of a reactor coolant pipe. One steam generator vault has a volume of 21,740 ft^3 and vent areas of 360 ft^2 and 111.3 ft^2; the other vault has a volume of 24,500 ft^3 and vent areas of 394 ft^2 and 106 ft^2. Volumes and vent areas used in the analysis are shown in Figure 5.9-1.

The reactor cavity region has been analyzed for the effects of a longitudinal split inside the pipe sleeve of area equivalent to the cross-sectional area of a reactor coolant pipe. A circumferential failure of the pipe at this location would result in a much smaller flow discharge area because the vessel, pipe, and sleeve arrangement is such that no significant relative movement can take place. The compartments analyzed are the pipe sleeve, reactor vessel annulus, and the compartment below the reactor vessel. The volume of the pipe annulus containing the break is 117.3 ft^3 and the vent area is 23.5 ft^2. The volume of the reactor vessel annulus is 223 ft^3

and the vent area is 54.2 ft^2. The volume of the compartment under the reactor vessel is 4709 ft^3 and the vent area is 33.2 ft^2. The areas reported above are net as-built vent areas. Volumes and vent areas used in the analysis are shown in Figure 5.9-2.

5.9.2.9 Analysis Results

The maximum pressure achieved in the smaller steam generator vault at the time of the peak differential pressure is 28.7 psig. The maximum differential between the steam generator vault and the dome is 27.4 psi and the maximum differential between the steam generator vault and the base compartment is 23.9 psi.

The maximum pressure calculated in the pipe annulus is 350 psig and this has also been selected as peak differential pressure. The maximum pressure in the reactor annulus is 84 psig, and again the peak differential has been selected as 84 psi. Finally, the peak pressure in the cavity below the vessel is 25 psig and the peak differential pressure is 24.3 psi.

The jet force loads from rupture of various pipes used in compartment structure designs are very conservative, and are as follows:

Break Location	Jet Force
• Primary loop hot leg	1800 kips
• Primary loop cold leg	1600 kips
• Crossover (pump suction leg)	2250 kips
• Steam line	813 kips
• Feedwater line	277 kips

The above jet forces are calculated by the method described in Section 10A.12.

The pressure differential values discussed above are from the re-analysis of compartment pressures. A comparison with the values assumed for design purposes are shown below:

Location	Re-analysis	Design Values
• Steam generator vault – base compartment	23.9 psi	25 psi
• Steam generator vault – bulk containment volume	27.4 psi	25 psi
• Reactor vessel gap – bulk containment volume	84.3 psi	85.3 psi
• Pipe annulus – bulk containment volume	350 psi	460.3 psi

The compartment structures surrounding the steam generator vaults have considerable margin in their design because of the design method used initially. The design was first done using

a simplified analysis and allowance was made for uncertainties. A subsequent finite element analysis showed the structural design could withstand nearly twice the originally predicted differential pressure loading.

5.9.2.10 Analysis Conclusions

5.9.2.10.1 Steam Generator Vault

Compartment Structural Design

The steam generator vault design depends primarily on steel reinforcement to carry the loads induced by compartment differential pressures, jet impingement forces and steam supply equipment reaction forces resulting from pipe rupture. Loads from compartment pressure differentials represent only a minor part of the total design load. The wall thickness was determined from biological shielding requirements and the resulting thickness exceeds that required by the loading configuration. The horizontal and vertical steel reinforcing bars carry the loads associated with the hoop stresses and longitudinal stresses, respectively. Steel reinforcing bars formed into stirrups carry the shear load. Figure 5.9-3 shows the orientation of the stirrups.

The simplified analysis initially used in the design of the compartments was a quasi-folded plate method. This method exaggerates the loading on the transverse and longitudinal frames examined during the analysis because some actual loads are accounted for twice, and this repetition leads to a structure that is very conservatively designed. The finite element analysis subsequently performed, demonstrated the degree of conservatism of the initial analysis.

5.9.2.10.2 Structural Analysis of Steam Generator Compartment Model

The finite element computer code Structural Analysis Program was used for the analysis. The structure for the compartment around Steam Generator 1A was modeled. The compartment configuration is shown in plan view in Figure 5.9-4 and in section on Figure 5.9-5. The model consists of vertical steam generator and reactor coolant pump shield walls, mezzanine floor, missile shield slabs, knuckle wall, and steam generator support steel beams.

The structural model consists of four different types of elements connected by 2151 nodal points. The number and type of elements are:

- 967 three dimensional brick elements
- 40 three dimensional beam elements
- 42 elastic shell elements
- 111 boundary elements

5.9.2.11 Loads

Structural integrity was analyzed for the 24 loading cases listed in Table 5.9-3. The loads are defined in the following discussion.

The maximum pressure differential load was determined from the compartment pressure analysis described above. The maximum pressure differential was 27.4 psi at 0.17 sec. after the break.

The seismic loads are determined from the analysis provided by Reference 3. The OBE has been defined as having ground acceleration of 0.06g. The DBE has been defined as having ground acceleration of 0.12g. For this analysis an equivalent static load method was used.

Pipe rupture forces (namely jet impingement and pipe reaction forces) were developed from a detailed analysis of the steam generator supports and calculations done expressly for this analysis.

5.9.2.12 Load Combinations

Loading combinations for design and stress investigation of the compartment structures are defined in Table 5.9-2 (see notes in Table 5.9-2).

- Load Combination 1: Normal Operation

  Stresses are very low during normal operations since the operating loads are extremely low when compared to accident induced loads. The massive self supporting walls and missile slabs are designed to restrain equipment and piping of RCS from lateral movements during hypothetical accidents.

  Similarly, compartment structures are also designed to provide biological shielding from radiation, and this requires wall thickness in excess of those required for structural integrity.

- Load Combination 2: Design Basis Accident

  This load combination includes maximum calculated internal differential pressure plus OBE. The wall acceleration used was 0.12g.

- Load Combination 3: Safe Shut-Down

  Load Combination 3 is similar to Load Combination 2 above except that the earthquake loading is the DBE. The wall acceleration used was 0.24g.

- Load Combination 4: Local Effects Consideration

This combination includes operating load and DBE in addition to an appropriate superposition of the time dependent pressure differential loads, pipe rupture reaction loads and jet impingement loads.

The highest loading results from a double-ended crossover pipe break. The peak load occurs at the time when the pressure differential load is 0.766 of its maximum value.

Load Combination 4 has also been modified to include hypothetical pressure differential loads of 50 psi and 75 psi.

5.9.2.13 Discussion of Results of Finite Element Analysis

Concrete walls are modeled with three-dimensional brick elements. The computer output consists of stresses at the element faces with the general convention described in Figure 5.9-6 and, as indicated, shear stresses are part of the unique solution for each loading case.

The most highly stressed elements of each load combination were selected for further detailed examination. The stresses on the brick elements were converted to axial forces, shear forces and moments, at each face. Then the stresses in the steel reinforcing bars and stirrups and concrete were calculated. These stresses were compared with Code allowable values as given in Table 5.9-2.

Because most sections are subjected to axial loads, the shearing capacity of the concrete was computed by:

$$v_c = 1.75\sqrt{f'_c(1.0 + 0.004\ \mathrm{N/A}_g)}$$

where N = axial force (if N is tension, negative sign reduces concrete shearing capacity), for Load Combinations 2 and 3. For Load Combination 4 the shearing capacity of the concrete was computed by:

$$v_c = 2(1.0 + 0.002\ \mathrm{N/A})\sqrt{f'_c}$$

The stresses for the critical sections are summarized in Table 5.9-4. For Load Combination 4.a) the calculated stresses are below the stress limits. The assumed allowable concrete stress design limit of 3000 psi is well below the actual measured 28-day compression strength of 6000 psi.

Further, in regards to the reinforcing bars specified by code, minimum yield strength is 60,000 psi but it has a tested average strength of 70,000 psi.

The margin of the compartment structural capability is indicated by the results for Load Combination 4. c) where, even for a hypothetical pressure differential load of 75 psi, the critical concrete stress is below both the specified and actual measured strength and the reinforcing steel stresses are below the specified and measured yield limits. Essentially no permanent deformation would be expected to occur.

Initially only the compartment walls of Unit 2 of Prairie Island, which are similar to Kewaunee compartments, were analyzed by a finite element analysis. In this case reinforcing was provided by 40 percent more than the analysis required.

5.9.2.14 Structural Analysis of Reactor Vessel Cavity Compartment

The load carrying ability of the reactor vessel cavity compartment is provided primarily by the 7.33-ft thick steel reinforced concrete walls. Steel supports for the reactor vessel are also encased in the concrete structure.

The dead load consists of the weight of the walls, equipment and water in the refueling pool. Thermal loads result from the neutron attenuation-induced thermal gradient in the wall. The long term design differential pressure for the cavity is 100 psi, however, a short-term differential pressure of 185 psi and an upper bound pressure differential of 480 psi have been considered for analysis purposes.

Seismic loads are determined from Reference 3. The highest structural stress and design limits for different load combinations are given in Table 5.9-5.

5.9.2.15 Nozzle Cavity

The applicable design loads for the nozzle cavity are as follows:

1. Differential pressure load due to pipe rupture in the nozzle region. The most critical stresses and the associated stress limits for the design differential pressure of 475 psi and an upper bound differential pressure of 1400 psi are given in Table 5.9-6.
2. Reaction loads imposed by the pipe restraints on the nozzle cavity walls for a pipe rupture in the nozzle region. Under normal operating conditions, the restraints impose negligible loads on the cavity walls. The normal operating temperature in the concrete is kept below the ASME B&P.V. Code, Section III, Division 2, allowables of 150°F overall and 200°F local. The rupture loads imposed by the restraints will result in the indentation of the restraint tips into the steel liner and a confined local bearing load on the concrete cavity wall.

5.9.2.16 Structural Supports for Primary System Components

5.9.2.16.1 Loads

The structural support system for the steam generators and reactor coolant pumps is designed for the following loads:

- Operating Loads

Consists of dead loads, live loads and loads caused by thermal expansion.

- Seismic Loads

  Seismic loads are determined from J.A. Blume Response Acceleration Spectra Curves (Reference 4) for the appropriate mass points under consideration.

- Pipe Rupture Reaction Loads

  These are reaction forces on equipment and structures caused by a postulated pipe rupture, except ruptures in the reactor coolant loop piping and the pressurizer surge line.

- Operating Loads On Ventilated Support Structures

  Operating loads consist of:

  a. Reactor vessel vertical dead loads,

  b. Lateral radial friction loads caused by radial thermal expansion of the reactor vessel,

  c. Internal loads within the ventilated support structures caused by local temperature gradients.

5.9.2.17 Method of Analysis

The steam generator analytical structural model consists of three related structural support systems: Pin-ended support columns, a lower lateral bumper support system, and an upper lateral suppressor dampened support system (see Figure 5.9-8). The three support systems are analyzed statically as a deformation related single system. Appropriate dynamic load amplification factors are applied to the dynamic loads of pipe rupture reactions.

The reactor coolant pump analytical structural model consists of pin-ended support columns and pin-ended horizontal tie members located at the tops of the columns (see Figure 5.9-11). This model is analyzed statically with a similar treatment of dynamic load amplification factors as described above.

The reactor vessel is the structural rigid center of the two loop system. The analytical structural model consists of six vertical support columns rigidly tied together at their tops and anchored into the massive concrete biological shield structure (see Figure 5.9-7).

The ventilated support structures as described in Section 4.2.2 are modeled as a deformation related group of structures designed to support the reactor vessel vertically and to restrain its horizontal movement. The entire analytical model is treated by statical methods with appropriate application of dynamic load amplification factors.

An independent time-history dynamic analysis of the complete assembly of the separate structural support systems modeled together with the complete nuclear steam supply equipment components and primary loop piping was made by the Westinghouse Electric Corp. The results of these two independent analyses were found to be a consistent agreement. Also, an independent

time-history dynamic analysis of the steam generator, its support system, and the steam piping was made by Pioneer Service & Engineering Co. and the results of this analysis were also found to be in consistent agreement with the original static analysis.

5.9.2.18 Design

5.9.2.18.1 Reactor Vessel (Figure 5.9-7)

The reactor vessel is supported on six vertical steel H-Columns embedded in the biological shield concrete. The tops of these columns are furnished with ventilated support structures to provide for a suitable temperature gradient between the heated parts of the reactor vessel coming in contact with the supports and the supporting steel columns and surrounding concrete below. These ventilated support pads are discussed in Section 4.2.2.

Fitted key slot blocks that are furnished with the reactor and bolted to the ventilated support pads provide for the free radial thermal expansion of the reactor vessel. Machined keys that are integral with the reactor vessel nozzles and support lugs are shimmed for sliding fits in the key slots and restrain the reactor vessel from movement in any horizontal direction. Thus the center point of the Reactor Vessel is rigid and has a “zero” lateral movement.

The tops of the steel H-Columns are connected together by means of a structural tee horizontal bracing system that is welded to a continuous outer steel band. This entire bracing system is embedded in concrete to provide a rigid anchorage. Stud anchors are welded to the flanges and web along the column length to assure the composite action of concrete in carrying the vessel loads, thereby providing additional load carrying margins in the supporting structural system.

5.9.2.18.2 Steam Generators (Figure 5.9-8)

Vertical support consists of four steel H-Columns hinged at each end to provide for unrestrained movement in the direction of thermal expansion. The column ends are securely bolted into the steam generator support lugs and anchored by embedded bolts at the base to provide for uplift forces that are postulated to occur during lateral loading of the support system.

Two lateral levels of supports are provided for the lateral seismic and pipe rupture loads.

The lower lateral support provides restraint in three of the six directional degrees of freedom by means of close clearance bumper-pedestals that are mounted on the compartment walls and on horizontal girders that span between compartment walls. These bumper-pedestals were fitted and shimmed for close clearance during pre-operational heatup.

The upper lateral support system consists of a horizontal ring girder that is fitted and shimmed to the contour of the steam generator shell with clearance allowance for the thermal expansion of the girder-shell system. The upper lateral support girder provides restraint in four directions by means of three attached bumper-pedestal plates that come in close clearance contact

with wall mounted bumper plates in the hot position of the generator. The fourth side of the girder is provided with a hydraulic suppressor whose longitudinal axis is in alignment with the direction of thermal expansion through the centerline of the steam generator. The suppressor is attached to the girder and the compartment wall by means of pivoted linkage brackets to allow for vertical thermal displacement of the girder. The hydraulic suppressor provides for freedom of movement in the direction of thermal expansion during heatup and cooldown and provides dampened restraint to the sudden loads of seismic action and pipe rupture.

The reactions of jet forces in the main steam line at the top of the steam generator are restrained by means of two cable anchors that are fitted with yokes welded to the pipe bends.

Based on independent flow stability computations in conjunction with information submitted by WPSC, the NRC has concluded that the KNPP primary loop piping complies with the revised General Design Criterion 4 (GDC-4) of Appendix A to 10 CFR Part 50. Thus, the probability or likelihood of large pipe breaks occurring in the primary coolant system loops is sufficiently low such that the dynamic effects associated with postulated pipe breaks need not be a design basis. The NRC's Safety Evaluation Report provided in Reference 14 approves this application of fracture mechanics "leak-before-break" technology. This, along with the elimination of arbitrary intermediate breaks in accordance with NRC Branch Technical Position MEB 3-1, Rev. 2, provided the basis for the removal of three of the four snubbers on the upper lateral support of each of the Steam Generators. Reference 15 is the NRC's Safety Evaluation for KNPP's Steam Generator snubber reduction.

5.9.2.18.3 Primary Piping (Figure 5.9-9)

The reactions of jet forces in primary loop piping caused by pipe rupture, which was postulated in the original design prior to elimination of the dynamic effects of primary loop rupture (see Section 5.9.2), are restrained by means of heavy structural steel weldment brackets rigidly anchored at various points throughout the internal concrete structures. Since the NRC approved the use of the "leak-before-break" analysis at KNPP (Reference 14), the need for the RCS crossover leg whip restraints has been eliminated. Analysis by Westinghouse, as part of the Steam Generator Replacement and the Power Uprate Projects, demonstrate the allowable stresses and displacements of the RCS piping, steam generators, primary equipment supports and primary equipment nozzle loads remain within acceptance criteria.

In order to limit the asymmetric LOCA loads for the postulated reactor coolant pipe break in the nozzle region, restraints have been provided for the hot and cold leg pipes in the penetrations of the reactor shield wall. The bearing pressure on the pipe exerted by the restraints is limited to 15KSI for the postulated accident conditions. Gaps between pipes and restraints are maintained as required by the original design. The lateral movement of pipe at the restraint is limited to 1½ inches, excluding the deformation of the pipe but including the gap. A factor of safety is provided against premature buckling of compression members. The structural steel

supporting the restraints was designed for load combinations and allowable stresses as specified in the FSAR using the latest editions of applicable codes at the time of original design.

5.9.2.18.4 Pressurizer (Figure 5.9-10)

The pressurizer is supported by the base concrete slab of the pressurizer vault and anchored thereto by means of 24 high strength bolts equally spaced on the circumference of the pressurizer support skirt.

5.9.2.18.5 Reactor Coolant Pumps (Figure 5.9-11)

Vertical support consists of three steel H-columns hinged at each end for vertical support and uplift hold-down while providing unrestrained freedom of movement laterally in the direction of thermal expansion during heatup and cooldown.

The connection between the top of the support columns and the pump support brackets is by means of a single high strength steel threaded rod. Between the support bracket and the top of the column are three high-strength tie bars with slotted holes at each end to accommodate the thermal expansion of the pump loop. The tie bars are anchored to the compartment walls and will prevent whipping of the pump in the event of a pipe rupture and/or a seismic event.

The structures are of heavy welded construction. The materials are specified to be ASTM-A588 high strength, low-alloy steel except for the coolant pump horizontal linkage bars, which are ASTM-A517. The connecting bolts to the steam generators are high strength precipitation hardening stainless steel. The connecting bolts to the pumps are high strength Maraging alloy steels. Anchor bolts are specified to meet ASTM-A540 requirements.

The design and fabrication was specified in accordance with the AISC Specifications for the “Design, Fabrication, and Erection of Structural Steel for Buildings” and selected provisions of the ASME Boiler and Pressure Vessel Code. Welding is in accordance with Section IX of the ASME Code.

In general, the final design sizing of members and welds as determined by the specified design criteria have been increased approximately 40 percent above the minimum design requirements to provide adequate margins in the design.

All anchor bolts carrying dynamic loads of equipment and that are subject to the forces of pipe rupture reactions are designed to be positively anchored by means of embedded anchor plates.

All plate material was specified to be ultrasonically tested. Steel plates, structural shapes and anchor bolts were specified to meet Charpy impact test requirements of 15 ft-lb average and 12 ft-lb minimum at 40°F. Anchor bolts are magnetic particle inspected.

All welding procedures were pre-qualified. All welders were qualified for the project work regardless of previous qualifications. All welds were either ultrasonically inspected or magnetic particle inspected in progressive steps. All weld thicknesses over 1½ inches were stress-relieved.

All work was specified to at least meet the minimum equivalent quality assurance requirements of Appendix IX of the ASME Boiler and Pressure Vessel Code.

5.9.2.19 Design Criteria

Because of the impulse nature of pipe rupture dynamic loads and the short duration of these loads, on the order of 10 milliseconds or less, there will be high strain-rate loadings present in the response of the structures.

This factor of the dynamic material behavior has been taken into account in establishing the design criteria since the results of tests (Reference 11) have shown that the stresses associated with the initiation of yielding have been found to increase with increased strain-rates (Reference 11).

Table 5.9-7 indicates the design stress limits that were used for the various design condition categories. The stress limits that are indicated for concrete apply to the anchorage design of the support embedments.

5.9.2.20 Reactor Cavity Biological Shield

The biological shield is a massive reinforced concrete structure that surrounds the reactor vessel and all its nozzles and immediate piping. The shield structure is supported in the vicinity of the containment vessel bottom head. It supports the reactor vessel by composite action with the embedded support columns. The top of the shield forms the floor of the refueling cavity pool. Its interconnection with the steam generator compartments and floor systems integrates its design function into the total interior structure complex.

Neutron absorption by the concrete biological shield structure at the level of the reactor core will result in a temperature of 118°F on the inside surface of the concrete facing the reactor vessel and an internal concrete temperature which will peak at about 190°F two (2) feet inside the concrete; these temperatures are not deleterious to the cement.

The thermally induced stresses in the concrete shield structure caused by neutron absorption were structurally analyzed using the “IBM M003 FLEXIBILITY ANALYSIS” program.

The concrete and reinforcement design of the concrete shield structure is based on the “Working Stress Design Method” of the ACI 318-63 code.

To provide generous margins in the design of the six (6) structural steel columns that support the reactor vessel and that are embedded in the concrete of this region, the structure was analyzed as an independent vertical support system and was assumed to carry the total reactor

vertical load without relying on the surrounding concrete. The embedded structural steel members were designed in accordance with the requirements of the AISC, “Specifications for the Design, Fabrication and Erection of Structural Steel for Buildings.”

The design criteria used is stated in Table 5.9-1 except that stress caused by thermal effects is included in all categories of loading.

5.9.2.21 Loads

The shield structure is designed to carry the vertical and horizontal live and dead loads of adjacent floors and structures that are attached to it as well as its own dead load.

Also included in the design are:

- Internal Pressure

  Pressure forces within the confines of the structure that are postulated to build-up in the event of a LOCA. These pressures are identified in Section 5.9.2.

- Neutron Absorption

  Stress load from neutron absorption. This is discussed above.

- Safety Injection Water

  Water pressure loads from the pooling of Safety Injection water in the reactor cavity up to the level of the nozzles.

- Reactor Vessel

  Reactor vessel dead and live loads.

- Refueling Cavity Pool

  Refueling cavity pool water load. This load is treated as a live load and will occur only during reactor shutdown.

- Residual Construction Loads

  These are internal residual construction stress loads resulting from shrinkage of the various levels of construction pours of concrete.

- Seismic Loads

  Seismic loads are determined from the John A. Blume analysis (Reference 3) of the Reactor-Auxiliary-Turbine buildings using data for the appropriate mass points under consideration.

- Pipe Rupture Reaction Load

These are reaction forces on equipment and structures caused by a postulated pipe rupture.

5.9.2.22 Method of Analysis

The biological shield was analyzed in the integrated structural model complex as previously described.

5.9.2.23 Design

Design is same as outlined in the RCS Compartments and Refueling Cavity.

5.9.2.24 Design Criteria

The design stress limits for the various design condition categories are as set forth in Table 5.9-8. Because of the massive nature of that portion of the shield structure below the vessel supports and its general involvement in structural action with the compartment structures, the design criteria established generally followed those criteria set for the compartment structures.

The shield structure above the vessel supports will respond to applied loads of a more local nature, therefore, the criteria established in Table 5.9-2 for the local effects of pipe rupture were used.

5.9.2.25 Floor Systems

Floor systems consist of the following types:

- Monolithic reinforced slab and beam construction,
- Composite concrete slabs and steel framing,
- Steel grating on steel framing.

The floors form an integral part of the knuckle support system as well as the interior concrete complex as described in preceding sections.

5.9.2.26 Loads

The floors are designed to carry the following loads:

- Dead Loads
- Floor Live Loads
- Equipment Loads
- Construction Loads
- Seismic Loads

- Loads Imposed on the Floor System caused by a postulated pipe rupture.

5.9.2.27 Method of Analysis

To avoid impractical and unwieldy analytical models the floor systems were modeled with any one or combination of the following models as was appropriate:

- Individual floor support system
- Floor and knuckle support system
- Floor and interior structure system

In most instances, floors were modeled as individual floor support systems since steel framing structures are secondary structures and therefore do not contribute to the structural support of the primary structures under the conditions of DBA, OBE, and DBE. These supporting steel structures as well as the composite floor structures are analyzed and designed to include the seismic effect of the structure dead loads and supported equipment.

5.9.2.28 Design and Design Criteria

Concrete floor systems are designed in accordance with the Working Stress Design Methods of the ACI-318 Code.

Structural steel is designed in accordance with the AISC Specifications for the “Design, Fabrication and Erection of Structural Steel for Buildings.”

Figure 5.9-12 shows the typical arrangement of the reinforcing steel patterns for reinforced concrete beam floors.

Figure 5.9-13 shows the typical arrangement of the reinforcing patterns for the steam generator and reactor coolant pump enclosure walls.

Design criteria is in accordance with Table B.6-2.

5.9.2.29 Stresses in Interior Structures

Table 5.9-9 summarizes the allowable and the maximum actual stresses in the four major categories of structures, which have been treated in detail in preceding sections.

The results of these analyses demonstrate that the critical stresses in all structures meet the criteria for allowable design stresses.

Provisions for reinforcing bar bond and anchorage in tension zones were in accordance with the requirements of the ACI Standard - Building Code Requirements for Reinforced Concrete ACI-318-63.

All splices and dowels were staggered wherever feasible and splices were located at points of minimum tension stresses. Regardless of the actual stress levels, splice laps and dowel lengths applicable for maximum stresses were used in accordance with Section 805(b) of the ACI Code where:

$$L = \frac{fs\ As}{\Sigma O(.75u)}$$

fs = 24,000 psi grade 60 reinforcing steel

fs = 20,000 psi grade 40 reinforcing steel

$$u(top\ bars) = \frac{3.4\sqrt{f'_c}}{D}$$

$$u(others) = \frac{4.8\sqrt{f'_c}}{D}$$

Anchorage of tension bars were in accordance with Section 1301(b) of the ACI Code where:

$$L = \frac{fs\ As}{\Sigma O(u)}$$

Regardless of the actual stress levels, the embedment length required for maximum allowable stress was used.

In the Shield Building wall, dome roof and internal Reactor Building concrete, the embedment and splice lengths “L” were increased an additional 10 percent for conservatism.

Coefficients of 1.5 and 1.67 times the allowable ACI Code working stress design values were used for DBE and tornado conditions respectively.

Further conservatism is realized because many design conditions were governed by construction loading and also the fact that the f'c = 4000 psi used in design is in reality 4800 psi or larger.

5.9.3 Materials

The specifications and working drawings for materials and their installation are of such scope and detail that the quality of internal structures is assured and the desired degree of integrity is obtained.

5.9.3.1 Concrete

The basic specifications for concrete materials and construction practices are as delineated in Section 5.2.2, Materials (Concrete). No high density concrete is used for structures. A small quantity of pre-cast high density shielding concrete may be provided at selected areas, but will not serve a structural function.

5.9.3.2 Reinforcement

Standards and specifications for reinforcement steel, testing, and construction methods are as follows:

• ACI	315	Manual of Standard Practice for Detailing Reinforced Concrete Structures
• ACI	318	Building Code Requirements for Reinforced Concrete
• CRSI	63	Recommended Practice for Placing Reinforcing Bars
• CRSI	65	Recommended Practice for Placing Bar Supports, Specifications and Nomenclature
• AWS	D1.0	Code for MC and Gas Welding in Building Construction
• AWS	D12.0	Recommended Practices for Welding Reinforcing Steel, Metal Inserts and Connections in Reinforced Concrete Construction
• ASME		Boiler and Pressure Vessel Code, Welding Qualifications, Sections IX
• ASTM	A615	Standard Specifications for Deformed Billet Steel Bars for Concrete Reinforcing, Grade 40 bars and Grade 60 bars
• ASTM	A185	Specifications for Welded Steel Wire Fabric for Concrete Reinforcement

5.9.3.3 Structural Steel

Standards and specifications for structural steel, testing and construction and methods are as follows:

- "Specification for the Design, Fabrication and Erection of Structural Steel for Buildings," published by the American Institute of Steel Construction
- "Code of Standard Practice for Steel Buildings and Bridges," published by the American Institute of Steel Construction
- "Code for Welding in Building Construction," published by the American Welding Society (AWS D1.0 and D3.0)

- "Boiler and Pressure Vessel Code," Section VIII "Unfired Pressure Vessels," and Section IX "Welding Qualifications," published by the American Society of Mechanical Engineers

ASTM:

A36	Specifications for Structural Steel
A502	Specifications for Steel Structural Rivets
A325	Specifications for High-Strength Bolts for Structural Steel Joints, Including Suitable Nuts and Plain Hardened Washers
A354	Specifications for Quenched and Tempered Alloy Steel Bolts and Studs with Suitable Nuts
A490	Specifications for Quenched and Tempered Alloy Steel Bolts for Structural Steel Joints
A588	Specifications for High-Strength Low Alloy Structural Steel with 50,000 psi Minimum Yield Point to 4 in. thick
A240	Specifications for Chromium and Chromium-Nickel Stainless Steel Plate Sheet and Strip for Fusion-Welded Unfired Pressure Vessels - Type 304
A298	Specifications for Corrosion-Resisting Chromium and Chromium-Nickel Steel Covered Welding Electrodes
A276	Specifications for Hot-Rolled and Cold-Finished Stainless and Heat Resisting Steel Bars
A306	Specifications for Carbon Steel Bars Subject to Mechanical Property Requirements, Grade 70
A370	Methods and Definitions for Mechanical Testing of Steel Products
A593	Specifications for Charpy V-Notch Testing Requirements for Steel Plates for Pressure Vessels
E109	Method for Dry Powder Magnetic Particle Inspection
E164	Method for Ultrasonic Contact Inspection of Weldments

ASME:

Appendix VI	Section VIII	Methods for Magnetic Particle Examination
Appendix U	Section VIII	Ultrasonic Examination of Welds
N-532	Section III	Requirements for Postweld Heat Treatment

5.9.4 Construction

5.9.4.1 Concrete in Ellipsoidal Bottom

The placement of internal reinforced concrete in the bottom and in the knuckle region of the ellipsoidal bottom of the Reactor Containment Vessel followed the concrete fill and chemical grouting operations of the concrete fill support under the Vessel (Section 5.2.1) after the lapse of sufficient time for the concrete fill and chemical grouting to develop strength to carry the loads to be imposed by the internal concrete. The internal concrete was placed in a manner to minimize shrinkage effects of concrete. Also prior to placement of internal concrete at the knuckle, the temporary steel stiffeners for the steel ellipsoidal bottom of the vessel were removed.

5.9.4.2 Reactor Cavity Structure

The reactor cavity structure was designed and constructed as a composite structural component by using shim lags on embedded members, to integrate the steel structural supporting system for the Reactor Pressure Vessel with the reinforced concrete mass required for shielding.

The reactor cavity is fabricated from stainless steel liner plate in the areas of the nuclear core and carbon steel liner plate above and below the core area. During operation of the reactor, the liner plate in the core area will function to minimize the circulation of concrete dust by the Ventilation System, with its attendant effects on the buildup of radiation sources within the accessible areas of containment. In addition, during the placement of concrete the liner plate functioned as a form.

5.9.4.3 Steam Generator and Reactor Coolant Pump Vaults

The vault structures were designed and constructed as two systems which are complementary rather than composite:

1. The structural steel system within the vault consists of supporting legs and pinned brackets, upper and lower lateral supports, stops, eye bar and pin retainers. All of these members are secured by anchor bolts rather than by embedment into the concrete walls of the vault. The structural steel systems, basically acts to transmit the load to the reinforced concrete internal structure.
2. The reinforced concrete walls of the vault resist the radial and lateral loads transmitted by the structural steel system through tension in anchor bolts and bearing against load distribution plates. The loads are dissipated through the reactions of the mass of the walls. The massive reinforced concrete base dissipates the vertical loading of the structural steel (supporting legs) system.

5.9.4.4 Reactor Refueling Cavity

The Reactor Refueling Cavity is a complementary system consisting of formed reinforced concrete and stainless steel liner plate. The reinforced concrete wall was placed in two lifts except

at the fuel transfer tube opening, where three lifts were required. The floor of the Reactor Refueling Cavity for the most part is the top lift of the reactor cavity concrete. The 3/16" stainless steel liner plate is field “seal” welded to stainless steel angles that are embedded and anchored in the reinforced concrete walls and floor.

5.9.4.5 Work Areas

The work areas consist of three types of construction, which are as follows:

- Top surface of mass (reinforced) concrete - i.e., basement floor
- Reinforced concrete construction, columns, beams and slabs - i.e., mezzanine floor
- Structural steel columns and beams and reinforced concrete structural slab - i.e., refueling and operating floor.

Chapter 5 References

1. Mechanical Engineering, December 1967, pp. 77-78
2. Kalnins, Arthur, “Analysis of Shells of Revolution Subjected to Symmetrical and Non-Symmetrical Loads,” Trans. ASME Journal of Applied Mechanics, Volume 31, Series E, No. 3, PP 467, 476, September 1964
3. John A. Blume & Associates, Engineers, Kewaunee Nuclear Power Plant Earthquake Analysis of the Reactor-Auxiliary Turbine Building, JAB-PS-01, February 16, 1971 (submitted as part of Amendment No. 9 to this license application)
4. John A. Blume & Associates, Engineers, Kewaunee Nuclear Power Plant Earthquake Analysis: Reactor-Auxiliary-Turbine Building Response Acceleration Spectra, JAB-PS-03, February 16, 1971 (submitted as part of Amendment No. 9 to this license application)
5. Bijlaard, P. P., “Stresses from Radial Loads and External Moments in Cylindrical Pressure Vessels, The Welding Journal,” December 1954
6. Bijlaard, P. P., “Stresses from Radial Loads in Cylindrical Pressure Vessels,” The Welding Journal Research Supplement, 1954
7. Barkan, D. D., Dynamics of Bases and Foundations, McGraw-Hill, 1962
8. “Design Procedures for Dynamically Loaded Foundations,” Journal of the Soil Mechanics and Foundation Division, ASCE SM6, November 1967, PP. 169-193
9. Roark, R. J., Formulas for Stress and Strain, 3rd Ed., p. 96, McGraw-Hill Book Co., Inc.
10. Shah, S.P. and Vijay Rangan, B., “Effects of Reinforcements on Ducility of Concrete,” Journal of the Structural Division, ASCE, Volume 96, No. ST6, Proceedings Paper 7366, June 1970, PP. 1167-1184

11. Brockenbrough, R. L. and B. G. Johnston, “Effects of Strain Rate,” Steel Design Manual, United States Steel Corporation, ADUSS 27-3400-02, November 1968, PP. 16-18

12. “Technical Bases for Eliminating Large Primary Loop Pipe Rupture as the Structural Design Basis for Kewaunee,” WCAP-11411, Rev. 1 (Westinghouse Proprietary) and WCAP-11410, Rev. 1 (Westinghouse Non-Proprietary), April 1987

13. “Additional Technical Bases for Eliminating Large Primary Loop Pipe Rupture as the Structural Design Basis for Kewaunee,” WCAP-11619 (Westinghouse Proprietary) and WCAP-11620 (Westinghouse Non-Proprietary), September 1987

14. NRC SER, K. E. Perkins (NRC) to D. C. Hintz (WPS) Letter No. K-88-32, February 16, 1988

15. NRC SER, J. G. Giitter (NRC) to D. C. Hintz (WPS) Letter No. K-88-50, March 18, 1988

16. NRC Safety Evaluation Report, S. A. Varga (NRC) to C. W. Giesler (WPS) Letter No. K-82-172, November 1, 1982

17. NRC Safety Evaluation Report, S. A. Varga (NRC) to C. W. Giesler (WPS), Letter No. K-82-153, September 30, 1982

18. “Technical Justification for Eliminating Pressurizer Surge Line Rupture as the Structural Design Basis for Kewaunee Nuclear Plant,” WCAP-12875, (Westinghouse Proprietary Class 2), June 1991

19. NRC SER, A. G. Hansen (NRC) to C. A. Schrock (WPS), Letter No. K-92-005, January 3, 1992

20. NRC Amendment No. 69 to Facility Operating License, M. B. Fairtile (NRC) to D. C. Hintz (WPS), Letter No. K-86-238, December 1, 1986

21. NRC Amendment No. 136 to Facility Operating License, W. O. Long (NRC) to M. L. Marchi (WPS), Letter No. K-98-82, June 24, 1998

Table 5.9-1
Allowable Stresses - Internal Structures

Reinforced Concrete - Structural Steel

Loading Conditions	Reinforced Concrete	Structural Steel
1. Dead loads plus live loads plus DBA load	ACI 318-63 Allowable Values	AISC Allowable Values
2. Dead loads plus live loads plus DBA load plus OBE load (0.06 g)	ACI 318-63 Allowable Values	AISC Allowable Values
3. Dead loads plus live loads plus DBA load plus DBE load (0.12 g)	1½ Times ACI 318.63 Allowable Values	1 1/2 Times AISC Allowable Values
4. Dead loads plus live loads plus pipe rupture (Note 1)	$f_c = 0.75\ f'_c$ $f_s = 0.90$ Y.S.	$f_s = 0.90$ Y.S.
5. Missile loads	$f_c = 1.25\ f'_c$ f_s = Stress @ 0.50 Ultimate Strain	$f_s = 0.90$ Y.S.

f'_c = Minimum 28-day compressive strength of concrete
f_c = Compressive stress in concrete
f_s = Tensile stress in steel
Y.S. = Specified minimum yield strength or yield point of steel
ACI Allowable Values are working stress design allowable stresses

Note 1: Criterion for pipe rupture is based on maximum usable in pipe as per Westinghouse Electric Corporation “Support Design Criteria - Reactor Coolant System Components”.

Table 5.9-2
Design Stress Limits For Reactor
Coolant System Compartments and Refueling Cavity

Design Condition Categories	Design Stress Limits for Reinforced Concrete		Design Stress Limits for Structure Steel	
	Criteria	Stress Limits	Criteria	Stress Limits
1. Normal Operation				
Operating Loads[1]	ACI-318 (WSD)	Code Allowable	AISC (Part 1)	Code Allowable
2. Design Basis Accident				
Operating Load + DBA (Maximum Internal Differential Pressure Load)[2] + OBE	ACI-318 (WSD)	Code Allowable	AISC (Part 1)	Code Allowable
3. Safe Shutdown[4]				
Operating Load + DBA (Maximum Internal Differential Pressure Load)[2] + DBE	ACI-318 (WSD)	1.5 x (Code Allowable)	AISC (Part 1)	1.5 x (Code Allowable)
4. Pipe Rupture Reaction Loads and Jet Loads (Local Effect)[5]				
a. Operating Load + DBA (Maximum Pipe Rupture Reaction Load)[2] + DBE	ACI-318 (WSD)	0.75 f'_c (concrete) 0.9 Y.S. (reinforcement)	AISC (Part 1)	0.9 Y.S.
b. Operating Load + DBA (Pipe Rupture Reaction Load and Internal Differential Pressure Load)[2][3] + DBE	ACI-318 (WSD)	0.75 f'_c (concrete) 0.9 Y.S. (reinforcement)	AISC (Part 1)	0.9 Y.S.

Table 5.9-2
Design Stress Limits For Reactor
Coolant System Compartments and Refueling Cavity

Design Condition Categories	Design Stress Limits for Reinforced Concrete		Design Stress Limits for Structure Steel	
	Criteria	Stress Limits	Criteria	Stress Limits

NOTES:

(1) Operating load includes: (a) dead load, (b) live load, (c) residual construction loads.
(2) DBA load includes thermal loads.
(3) The combination of pipe rupture reaction load and jet load with the associated internal differential pressure load that resulted in the most severe effect on the structure was used in the analysis and design.
(4) Safe shutdown analysis includes the general effects of pipe rupture loads on the complex of integrated structures.
(5) Safe shutdown analyzed for the local effects of pipe rupture loads and jet loads.

Table 5.9-3
Loads and Load Combinations for Finite Element Analysis

Loading Case Number	Loads and Load Combinations
1	Pipe Rupture; Hot Leg, Horizontal Run-A
2	Pipe Rupture; Hot Leg, Horizontal Run-S
3	Pipe Rupture; Cross-over Leg, Vertical Run, S.G. Side-A
4	Pipe Rupture; Cross-over Leg, Vertical Run, S.G. Side-B
5	Pipe Rupture; Cross-over Leg, Horizontal Run-A
6	Pipe Rupture; Cross-over Leg, Horizontal Run-B
7	Pipe Rupture; Cold Leg - A
8	Pipe Rupture; Cold Leg - B
9	Pipe Rupture; Cross-over Leg, Run-A (Split)
10	Pipe Rupture; Cross-over Leg, Run-B (Split)
11	Load Combination: 0.766 DDP* + (Case 1) + DBE**
12	Load Combination: 0.766 DDP + (Case 2) + DBE
13	Load Combination: 0.766 DDP + (Case 3) + DBE
14	Load Combination: 0.766 DDP + (Case 4) + DBE
15	Load Combination: 0.766 DDP + (Case 5) + DBE
16	Load Combination: 0.766 DDP + (Case 6) + DBE
17	Load Combination: 0.766 DDP + (Case 7) + DBE
18	Load Combination: 0.766 DDP + (Case 8) + DBE
19	Load Combination: 0.766 DDP + (Case 9) + DBE
20	Load Combination: 0.766 DDP + (Case 10) + DBE
21	Design Differential pressure = 27.4 psi
22	DDP + DBE
23	DDP + (0.5) x DBE
24	DDP + (1.0) x DBE

* Design Differential Pressure (DDP)
** Design Basis Earthquake (DBE)

Table 5.9-4
Steam Generator Vault Maximum Stress and Stress Limits

	Design Stress Limits for Reinforced Concrete		Design Stress Limits For Reinforcing Steel	
Load Combination	Design Stress (psi)	Stress Limit (psi)	Design Stress (psi)	Stress Limit (psi)
1. Normal Operation				
Operating Loads	Not Critical	Not Critical	Not Critical	Not Critical
2. Design Basis Accident				
Operating Load + DBA (Maximum Internal Differential Pressure Load) + OBE	639	1800	19,590	24,000
3. Safe Shut-Down				
Operating Load + DBA (Maximum Internal Differential Pressure Load) + DBE	644	2700	21,000	36,000
4. Pipe Rupture Reaction Loads and Jet Loads (Local effect)				
a. Operating Load + DBA (Pipe Rupture Reaction Load & Internal Differential Pressure Load) (27.4 psi) + DBE	1267	3000	49,475	54,000
b. Operating Load + DBA (Pipe Rupture Reaction Load & Internal Differential Pressure Load) (50 psi) + DBE	1250	3000	51,550	54,000

Table 5.9-4
Steam Generator Vault Maximum Stress and Stress Limits

	Design Stress Limits for Reinforced Concrete		Design Stress Limits For Reinforcing Steel	
Load Combination	Design Stress (psi)	Stress Limit (psi)	Design Stress (psi)	Stress Limit (psi)
c. Operating Load + DBA (Pipe Rupture Reaction Load & Internal Differential Pressure Load) (75 psi) + DBE	1320	4000	57,480	60,000

Table 5.9-5
Reactor Vessel Cavity
Maximum Stress And Stress Limits

	Design Stress Limits for Reinforced Concrete		Design Stress Limits for Reinforcing Steel	
	Design Stress (psi)	Stress Limit (psi)	Design Stress (psi)	Stress Limit (psi)
1. Normal Operating Loads (Dead Loads + Thermal)	389	1800	6150	24,000
2. Dead Loads + Thermal + OBE + Differential Pressure (100 psi)	479	1800	12,351	24,000
3. Dead Loads + Thermal + DBE + Maximum Differential Pressure (185 psi)	569	2700	22,800	36,000
4. Dead Loads + Thermal + DBE + Maximum Hypothetical Differential Pressure (480 psi)	569	4000	59,284	60,000

Table 5.9-6
Nozzle Cavity Maximum Stress and Stress Limits

	Design Stress (psi)	Stress Limit (psi)
1. Differential Pressure = 475 psi	10,133	20,000
2. Differential Pressure = 1400 psi	29,870	45,000

Table 5.9-7
Design Stress Limits for Structural Equipment Supports

	Design Stress Limits (1)	
Design Condition Categories	Steel	Concrete
1. Normal Conditions: Operating Loads	0.6 Fy	0.45 f'c
2. Upset Condition: Operating Loads + OBE	0.6 Fy	0.45 f'c
3. Emergency Condition: Operating Loads + DBE	0.9 Fy	0.675 f'c
4. Faulted Condition:		
a. Operating Loads + DBA (2)		
(1) Duration: > 0.01 Sec	0.9 Fy	0.675 f'c
(2) Duration: ≤ 0.01 Sec	0.95 Fy or 0.8 F_u	0.75 f'c
b. Operating Loads + DBA + DBE		
(1) Duration: > 0.01 Sec	Fy or 0.85 F_u	0.75 f'c
(2) Duration: ≤ 0.01 Sec	1.1 Fy or 0.9 F_u	0.85 f'c

NOTES:

1. Fy = Minimum Yield Stress

   F_u = Ultimate Tensile Stress

   f'_c = Minimum 28-Day Compressive Strength of Concrete

2. DBA Load Includes:

   a. Pipe Rupture Reaction Loads

   b. LOCA Temperature Transients Through Steel

Table 5.9-8
Design Stress Limits for Biological Shield Structures

Structural System and Design Condition Categories	Design Stress Limits for Reinforced Concrete		Design Stress Limits for Structure Steel	
	Criteria	Stress Limits	Criteria	Stress Limits
1. Shield Structure Below Reactor Vessel Supports				
a. Normal Operation: Operating Loads(1)	ACI-318 (WSD)	Code Allowable	AISC (Part 1)	Code Allowable
b. Design Basis Accident: Operating Load + DBA + OBE	ACI-318 (WSD)	Code Allowable	AISC (Part 1)	Code Allowable
c. Safe Shutdown: Operating Load + DBA + DBE	ACI-318 (WSD)	1.5 x (Code Allowable)	AISC (Part 1)	1.5 x (Code Allowable)
2. Shield Structure Above Reactor Vessel Supports				
a. Normal Operation: Operating Loads(1)	ACI-318 (WSD)	Code Allowable	AISC (Part 1)	Code Allowable
b. Design Basis Accident: Operating Load + DBA + OBE	ACI-318 (WSD)	0.75 f'_c (concrete) 0.9 Y.S. (reinforcement)	AISC (Part 1)	0.9 Y.S.
c. Safe Shutdown: Operating Load + DBA + DBE	ACI-318 (WSD)	0.75 f'_c (concrete) 0.9 Y.S. (reinforcement)	AISC (Part 1)	0.9 Y.S.

Table 5.9-8
Design Stress Limits for Biological Shield Structures

Structural System and Design Condition Categories	Design Stress Limits for Reinforced Concrete		Design Stress Limits for Structure Steel	
	Criteria	Stress Limits	Criteria	Stress Limits

NOTES:

1. Operating load includes: (a) dead loads, (b) live loads, (c) neutron absorption, (d) reactor vessel operating weight, and (e) residual construction loads.
2. DBA load includes: (a) internal pressure, (b) pipe rupture reaction loads, and (c) safety injection water load.

Table 5.9-9
Allowable and Critical Stresses in Reactor Building Interior Structures

Structural Stress and Design Condition Categories	Loading Criteria	Design Stress Limits (psi)		Actual Maximum Stresses (psi)	
		f'_c	f_s	f'_c	f_s
1. Equipment Compartments					
a. Normal Operation	Operating Loads	1800	24000	200	5900
b. Design Basis Accident	Operating Loads + DBA + OBE	1800	24000	610	24000
c. Safe Shutdown	Operating Loads + DBA + DBE	2700	36000	2200	3200
d. Pipe Rupture Reaction Loads and Jet Loads (Local Effect)	1. Operating Loads + DBA (Maximum Pipe Rupture Reaction Load) + DBE	3000	54000	2260	48430
	2. Operating Loads + DBA (Pipe Rupture Reaction Load and Internal Differential Pressure Load) + DBE	3000	54000	2890	53200
2. Structural Equipment Supports					
a. Normal Condition	Operating Loads	1500	30000*	200	5850*
b. Upset Condition	Operating Loads + OBE	1800	30000*	500	19700*
c. Emergency Condition	Operating Loads + DBE	2700	45000*	2190	24700*
d. Faulted Condition	Operating Loads + DBA:				
	1. Duration: >0.01 Sec	2700	45000*	(1)	(1)
	2. Duration: ≤ 0.01 Sec	3000	47500*	(1)	(1)
	Operating Loads + DBA + DBE:				
	3. Duration: > 0.01 Sec	3000	56000*		
	4. Duration: ≤ 0.01 Sec	3400	56000*	2630	56000*
3. Biological Shield					
Structure Below Reactor Vessel Supports					
a. Normal Operation	Operating Loads	1800	24000	420	20900
b. Design Basis Accident	Operating Loads + DBA + OBE	1800	24000	500	21500
c. Safe Shutdown	Operating Loads + DBA + DBE	2700	36000	500	21500
Structure Above Reactor Vessel Supports					
a. Normal Operation	Operating Loads	1800	24000	60	20900
b. Design Basis Accident	Operating Loads + DBA + OBE	3400	54000	70	25400
c. Safe Shutdown	Operating Loads + DBA + DBE	3400	54000	70	25400

Table 5.9-9
Allowable and Critical Stresses in Reactor Building Interior Structures

Structural Stress and Design Condition Categories	Loading Criteria	Design Stress Limits (psi)		Actual Maximum Stresses (psi)	
		f'_c	f_s	f'_c	f_s
4. Floor Systems					
Monolithic Concrete Beam and Slabs					
a. Normal Operation	Operating Loads	1800	24000	1800	22600
b. Design Basis Accident	Operating Loads + DBA + OBE	1800	24000	1800	23900
c. Safe Shutdown	Operating Loads + DBA + DBE	2700	36000	1900	25300
Composite Floors (Concrete Slab on Steel Framing) (All Design Condition Categories)	1. Operating Loads + OBE	1800	24000	1570	22400
	2. Operating Loads + DBE	2700	36000	1660	23800
Steel Grating on Steel Framing (All Design Condition Categories)	1. Operating Loads + OBE	NA	22000*	NA	25000*
	2. Operating Loads + DBE	NA	33000*	NA	25000*

NOTES:
f_s (without asterisk) = Tensile Stress in Reinforcing Steel
f_s (*) = Tensile Stress in Structural Steel
(l) Stresses not calculated

Figure 5.9-1 Steam Generator Vault Compartment Differential Pressure Analysis

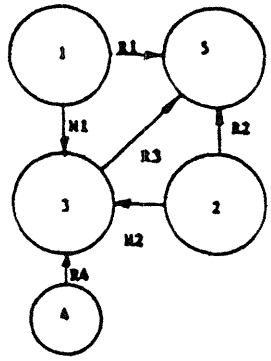

Compartment	Volume (ft^3)
1 (Steam generator vault)	21,740
2 (Steam generator vault)	24,500
3 (Base compartment)	66,000
4 (Foundation void)	23,935
5 (Bulk containment volume)	1,184,000

Flow path	Minimum flow area (ft^2)
R1	360
R2	394
R3	174
RA	12.6
M1	111.3
M2	106.0

Figure 5.9-2 Volume and Flow Path Schematic of Reactor Cavity Region

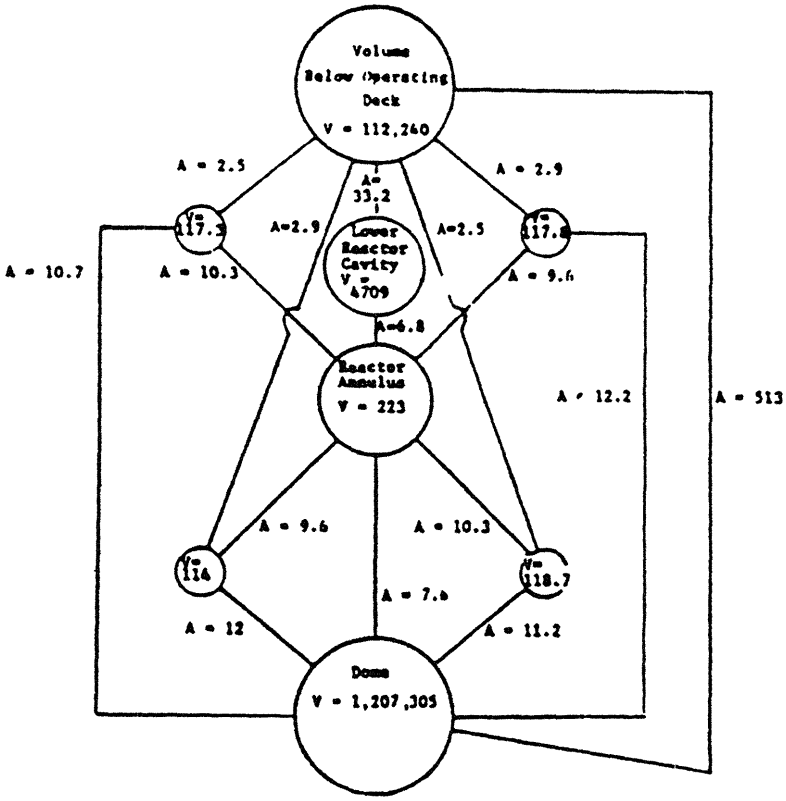

Figure 5.9-3 Plan View and Section of Wall Segment Showing Stirrup

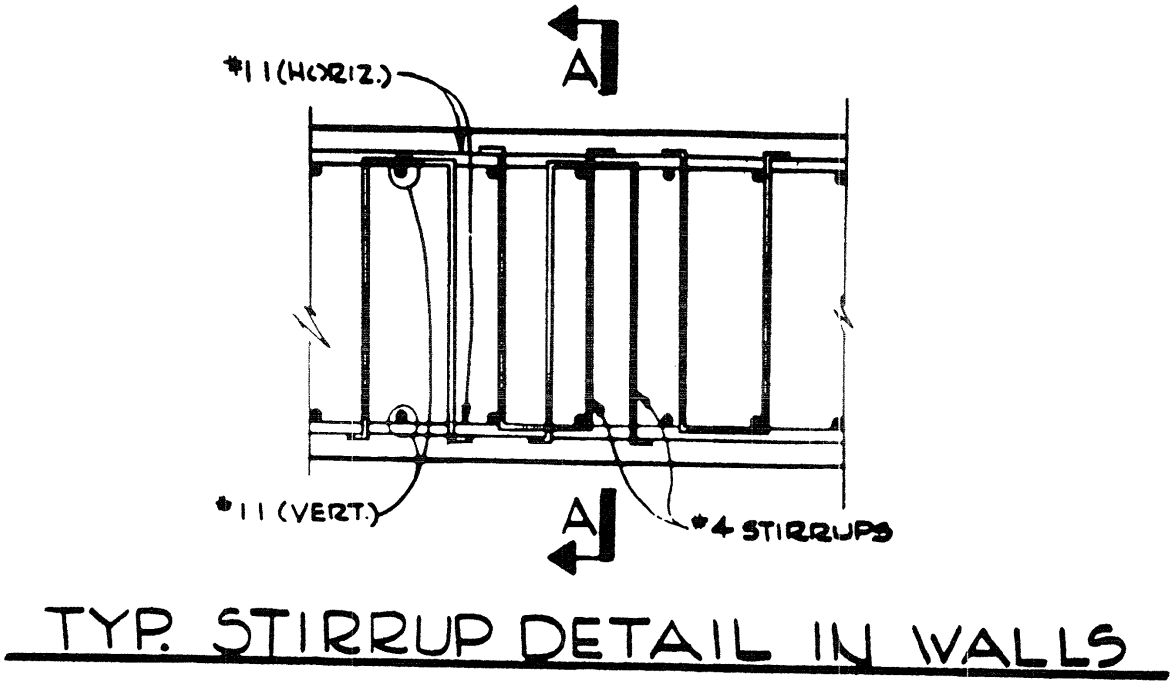

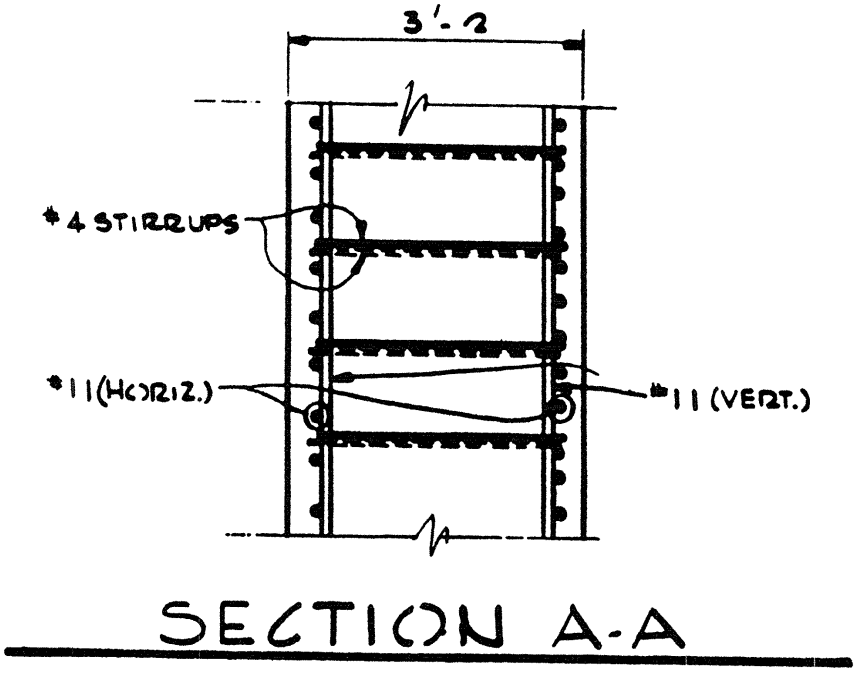

Figure 5.9-4 Plan View or Structural Model of Steam Generator Compartment (Height 68 Ft.)

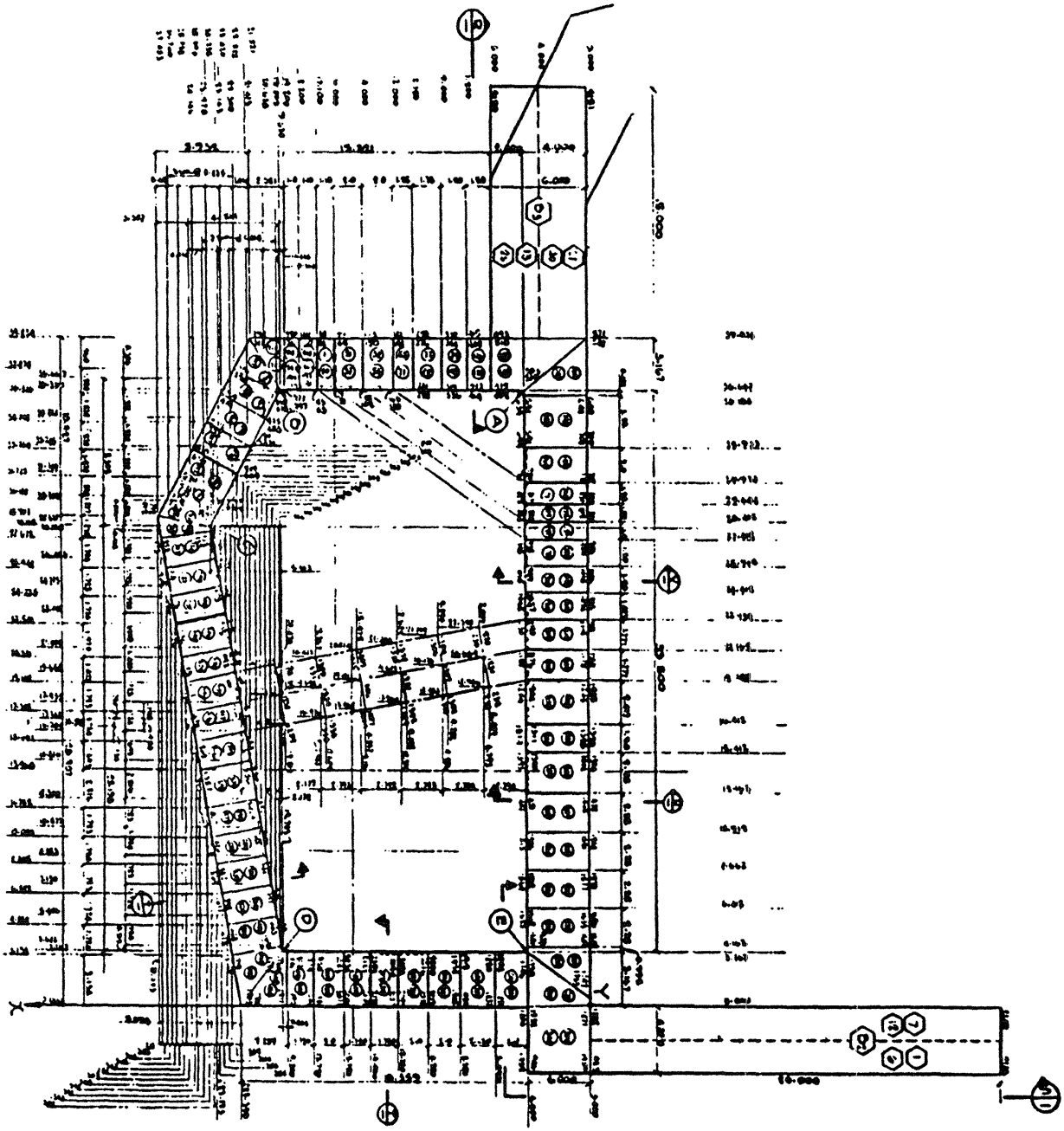

Figure 5.9-5 Steam Generator and Reactor Cavity Compartment Configuration - Section

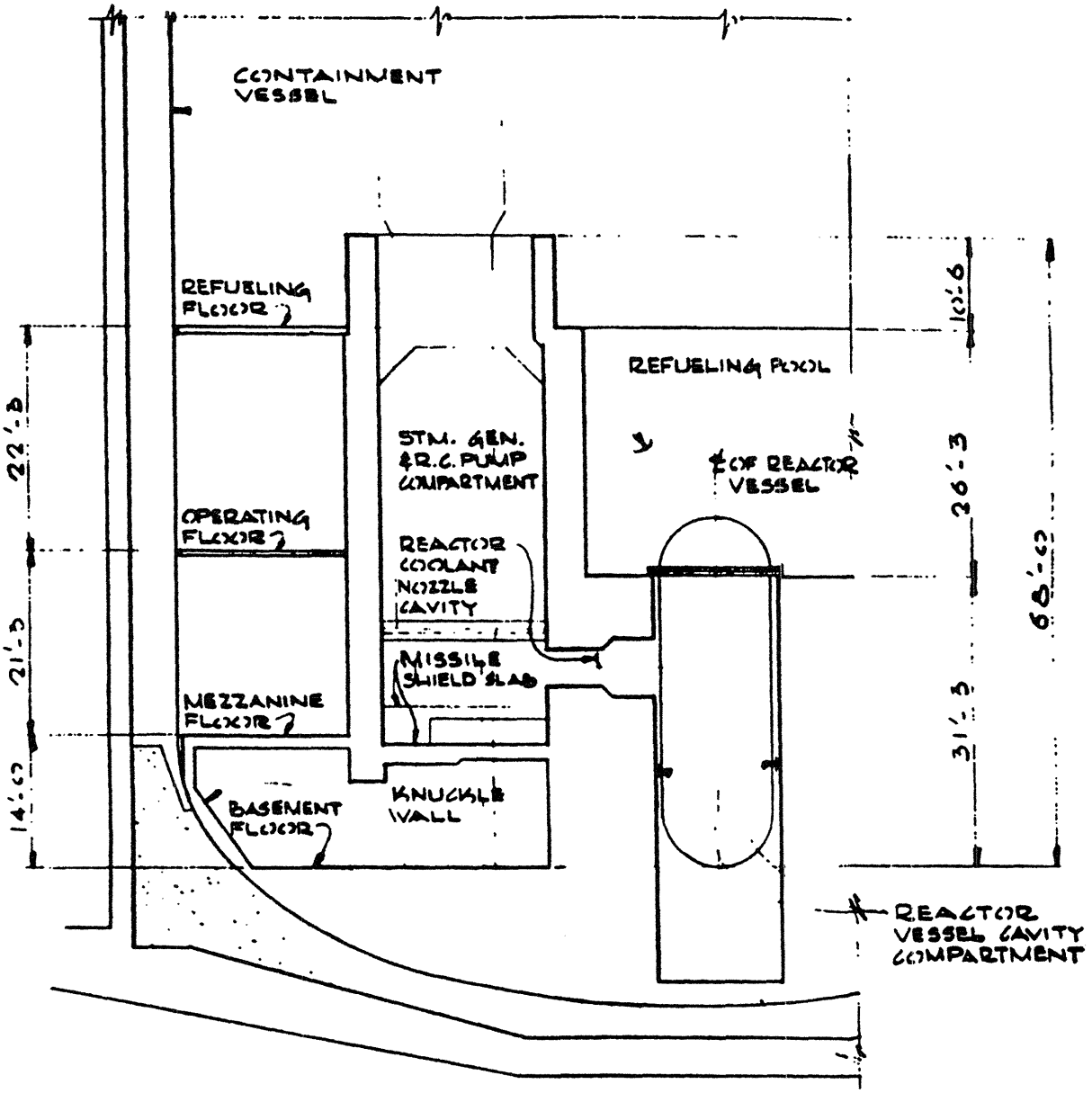

Figure 5.9-6 Stress Output for Three-Dimensional Brick Element in Local Coordinate System

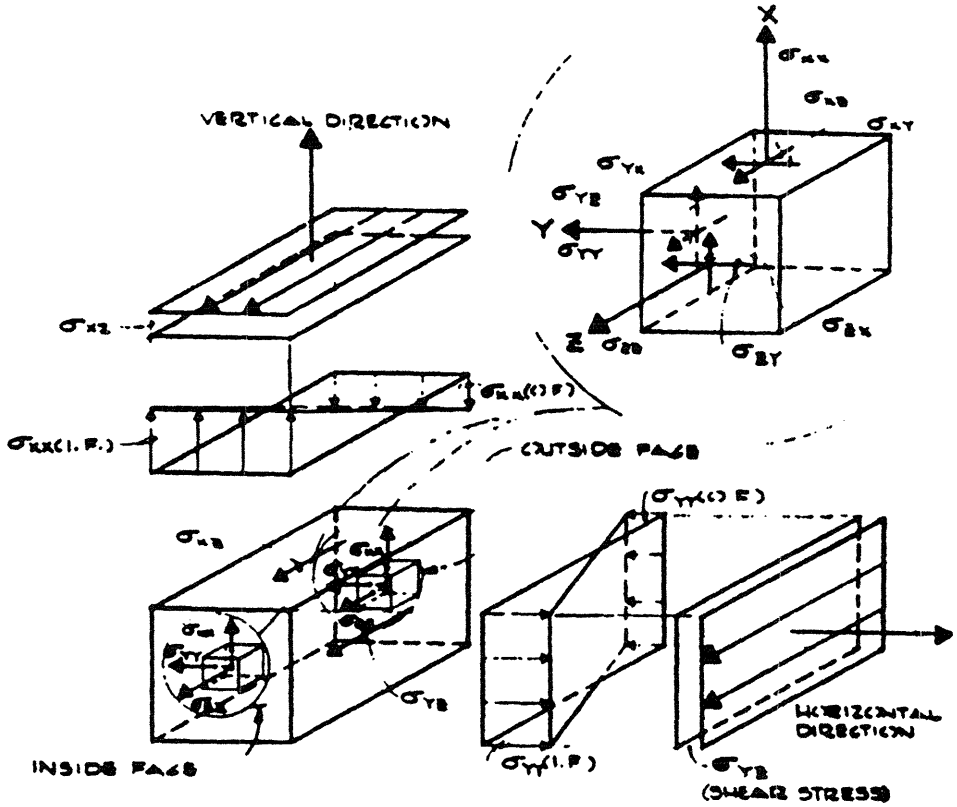

NOTES:

1. Inside Face: Facing Steam Generator and Reactor Coolant Pump.
2. Outside Face: Opposite of Inside Face of Wall.
3. σ_{xx}, σ_{yy}, σ_{zz}: Positive for Tension and Negative for Compression.

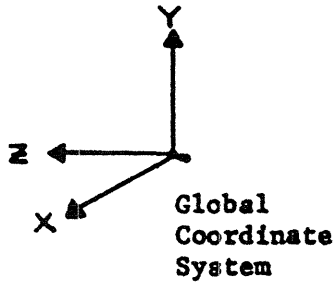

Figure 5.9-7 Reactor Vessel Supports

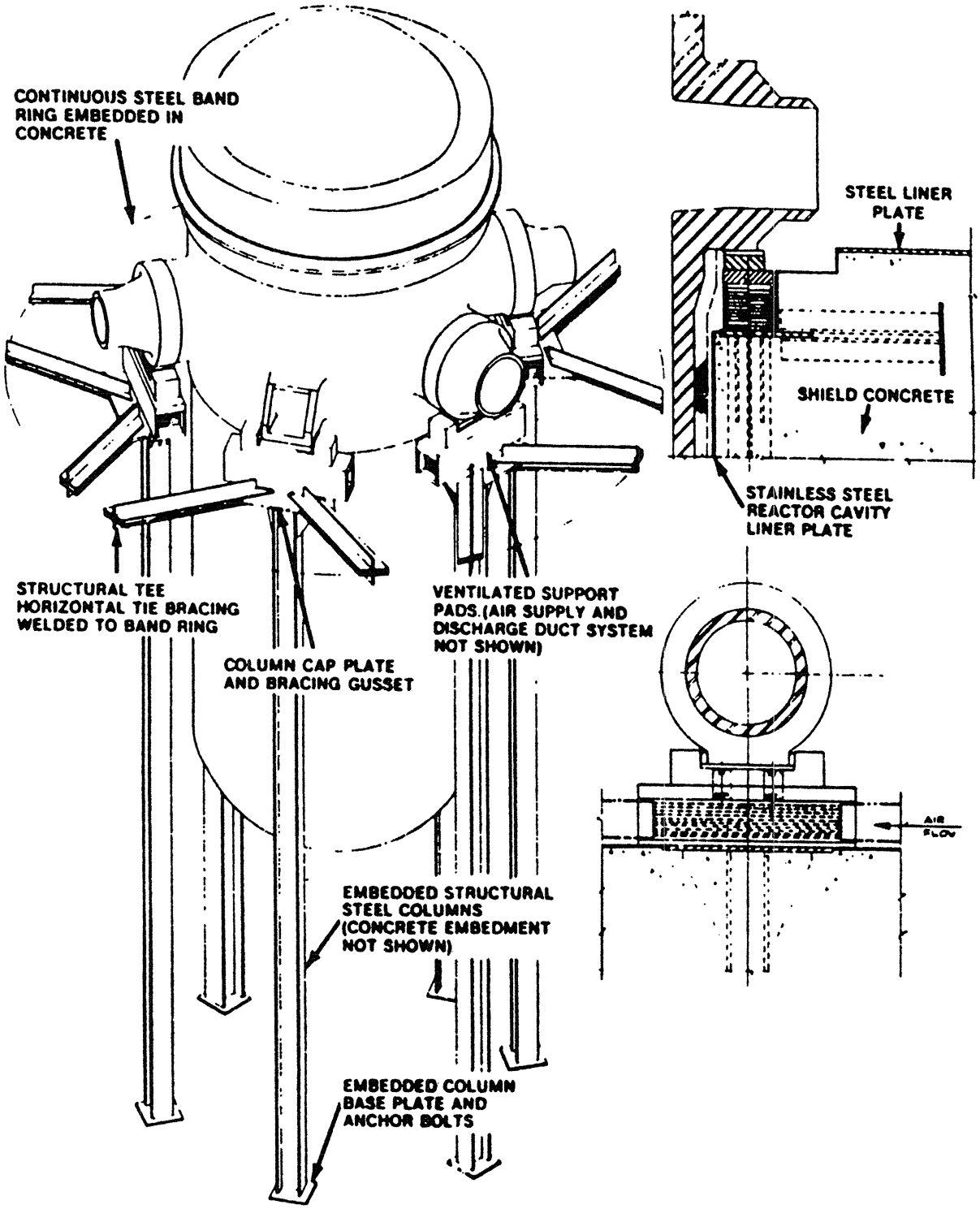

Figure 5.9-8 Steam Generator Supports

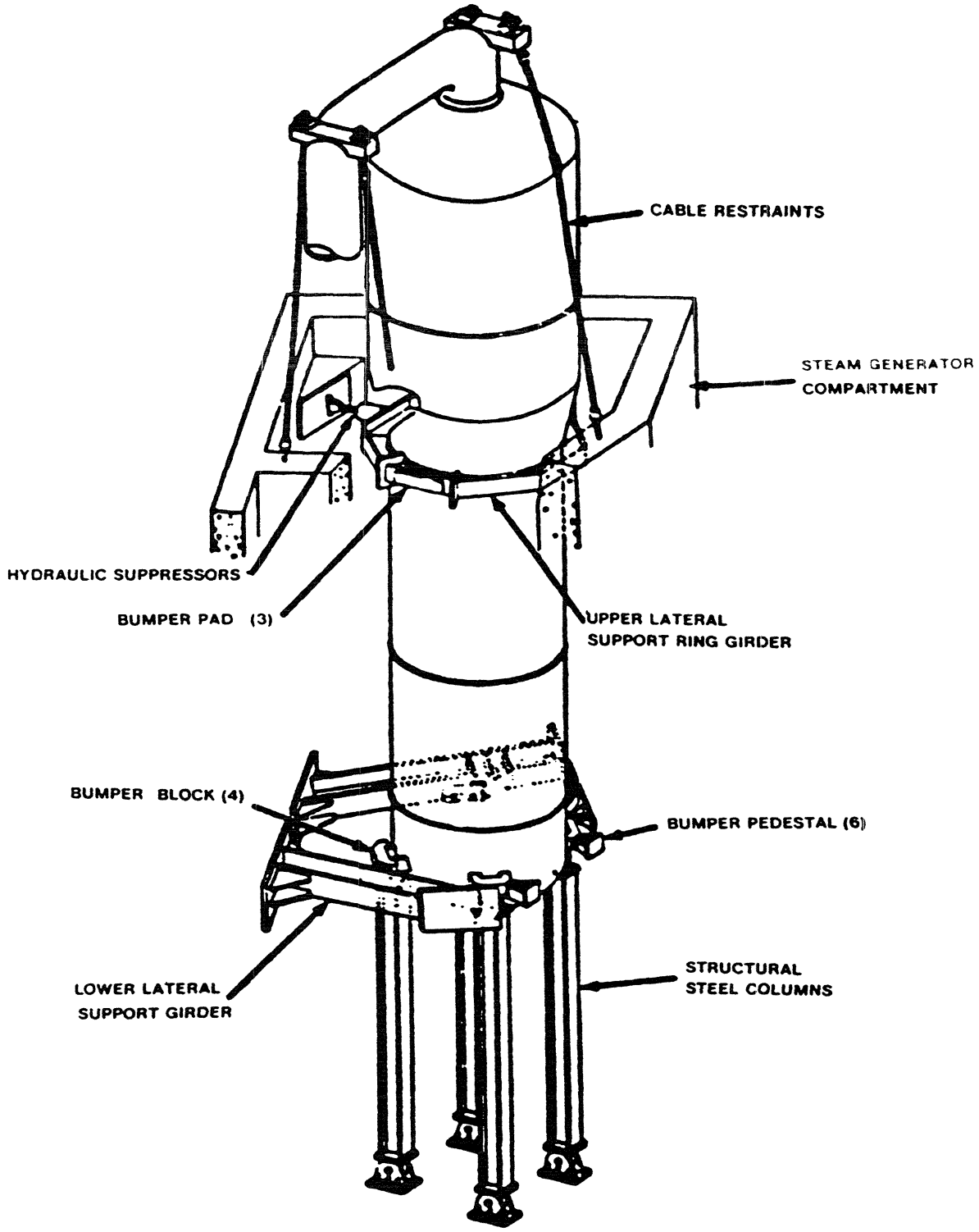

Intentionally Blank

Figure 5.9-9 Primary Coolant Loop Piping Restraints

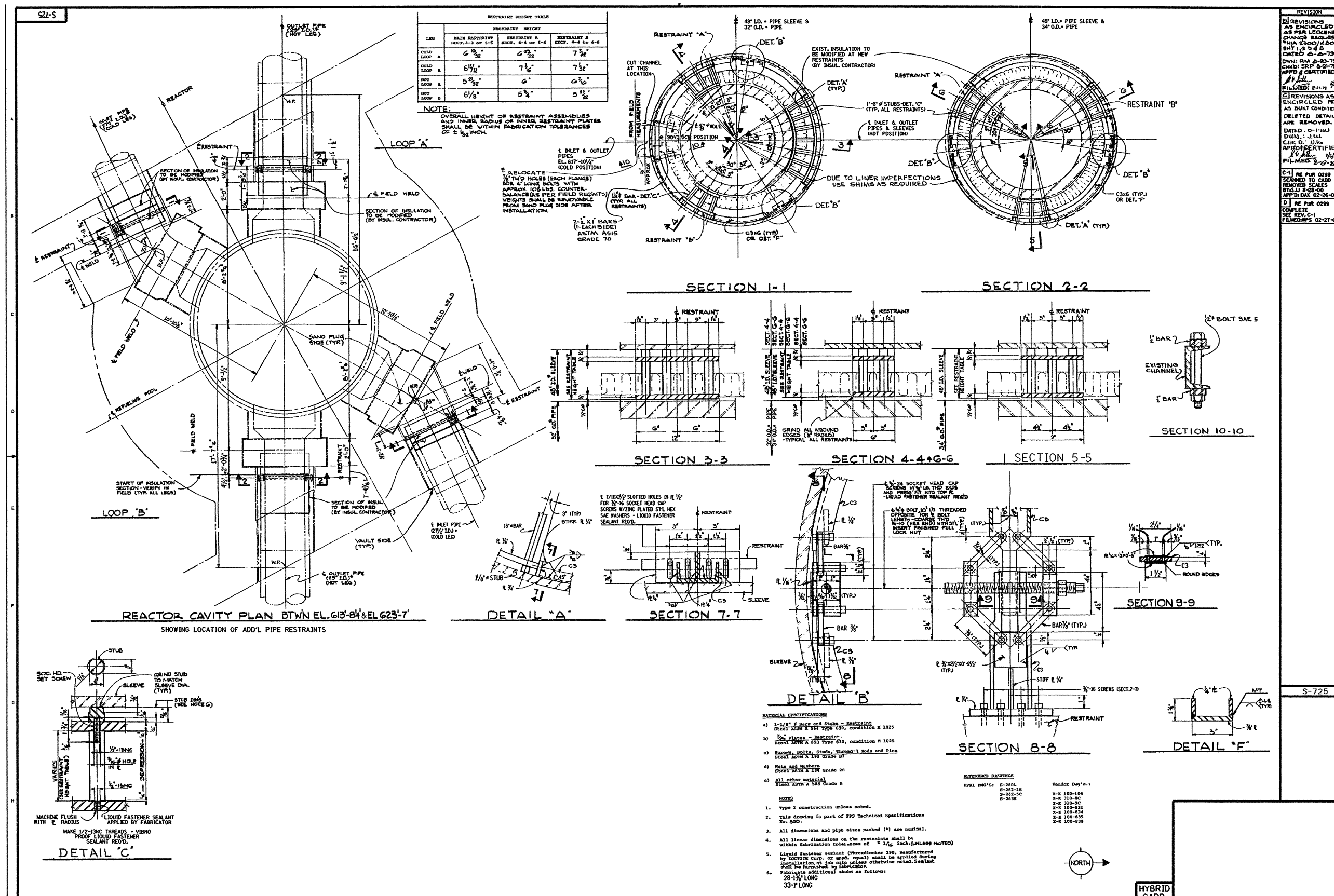

Intentionally Blank

Figure 5.9-10 Pressurizer Support

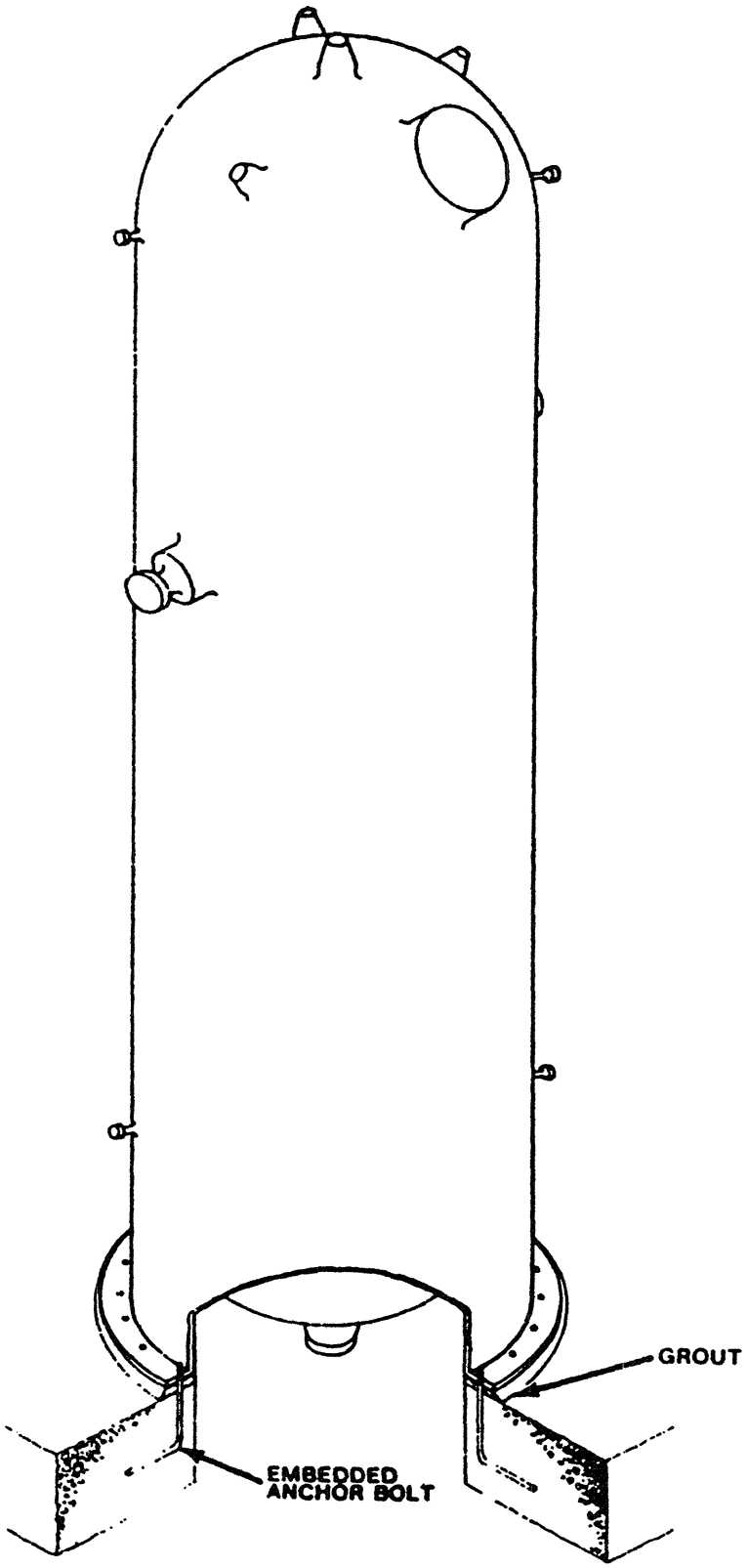

Figure 5.9-11 Reactor Coolant Pump Supports

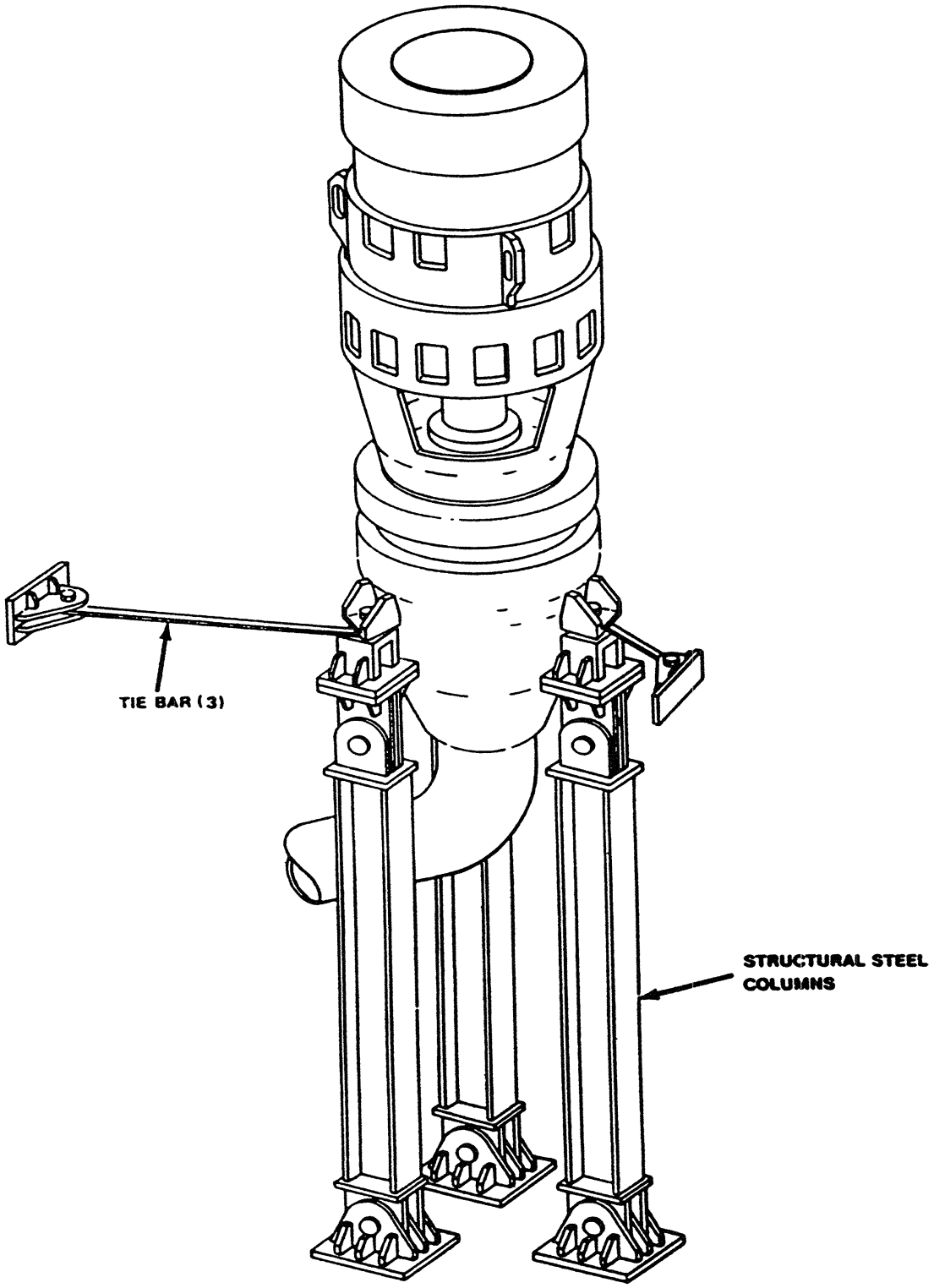

Figure 5.9-12 Concrete Beam Floor Typ. Arrangement of Reinf.

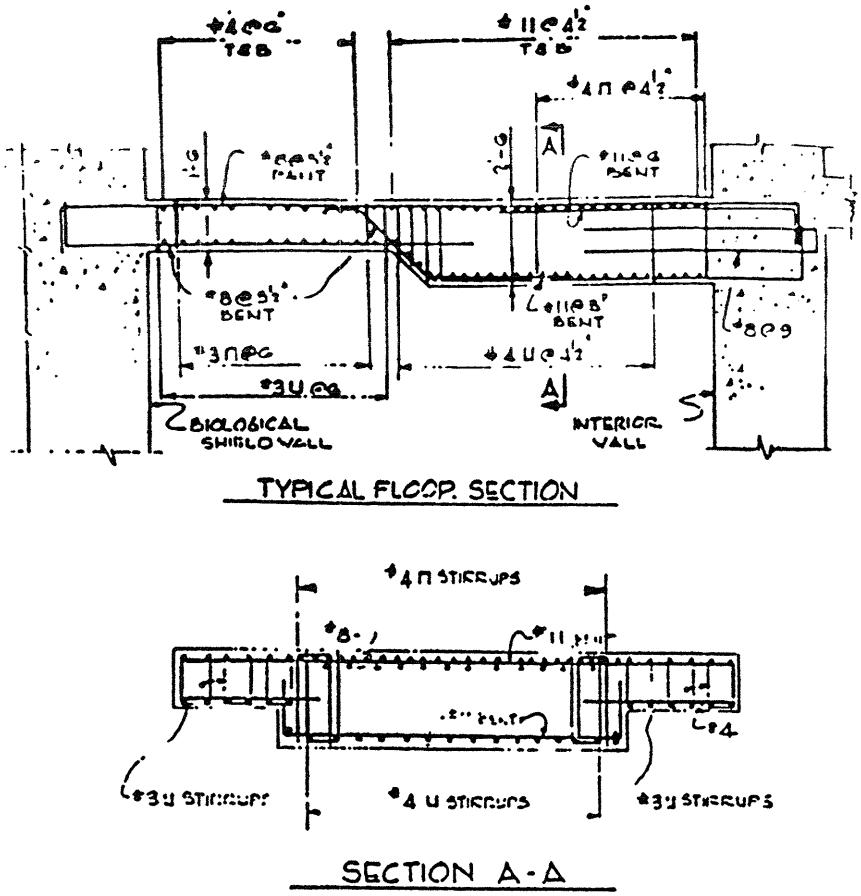
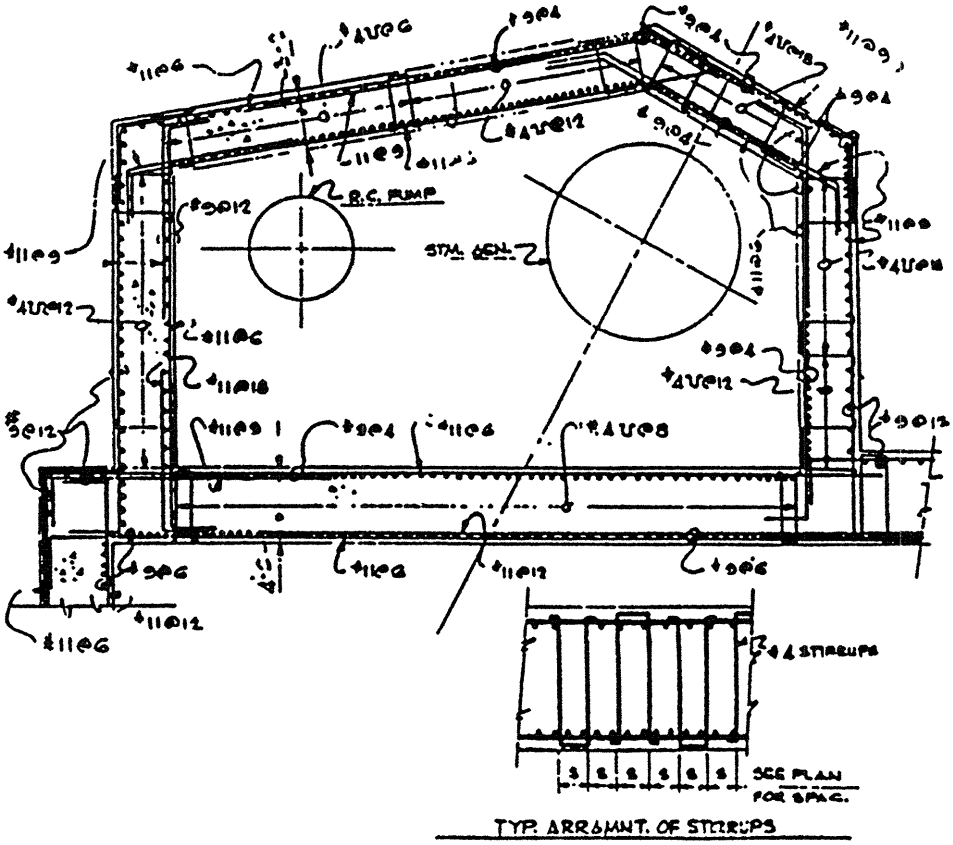
Figure 5.9-13 Enclosure Walls for Steam Generator & R.C. Pump Typ. Plan of Reinforcement