Chapter 4: Reactor Coolant System

Table of Contents

Section	Title	Page
4.1	DESIGN BASES	4.1-1
4.1.1	Performance Objectives	4.1-1
4.1.2	General Design Criteria	4.1-1
4.1.2.1	Quality Standards	4.1-1
4.1.2.2	Performance Standards	4.1-2
4.1.2.3	Records Requirements	4.1-3
4.1.2.4	Missile Protection	4.1-3
4.1.3	Principal Design Criteria	4.1-4
4.1.3.1	Reactor Coolant Pressure Boundary	4.1-4
4.1.3.2	Monitoring Reactor Coolant Leakage	4.1-4
4.1.3.3	Reactor Coolant Pressure Boundary Capability	4.1-5
4.1.3.4	Reactor Coolant Pressure Boundary Rapid Propagation Failure Prevention	4.1-6
4.1.3.5	Reactor Coolant Pressure Boundary Surveillance	4.1-7
4.1.4	Design Characteristics	4.1-8
4.1.4.1	Design Pressure	4.1-8
4.1.4.2	Design Temperature	4.1-8
4.1.4.3	Seismic Loads	4.1-8
4.1.5	Cyclic Loads	4.1-9
4.1.5.1	Heatup and Cooldown	4.1-9
4.1.5.2	Unit Loading and Unloading	4.1-10
4.1.5.3	Step Load Increase and Decrease of 10%	4.1-10
4.1.5.4	Large Step Decrease in Load	4.1-11
4.1.5.5	Loss of Load	4.1-11
4.1.5.6	Loss of Power	4.1-12
4.1.5.7	Loss of Flow	4.1-12
4.1.5.8	Reactor Trip From Full Power	4.1-12
4.1.5.9	Turbine Roll Test	4.1-13
4.1.5.10	Hydrostatic Test Conditions	4.1-13
4.1.5.11	Pressurizer Surge and Spray Line Connections	4.1-14
4.1.5.12	Accident Conditions	4.1-14
4.1.6	Service Life	4.1-16
4.1.7	Codes and Classifications	4.1-17

Chapter 4: Reactor Coolant System

Table of Contents

Section	Title	Page
4.2	SYSTEM DESIGN AND OPERATION	4.2-1
4.2.1	General Description	4.2-1
4.2.2	Components	4.2-1
4.2.2.1	Reactor Vessel	4.2-1
4.2.2.2	Foreign Obligations	4.2-3
4.2.2.3	Reactor Vessel Support Structure	4.2-4
4.2.2.4	Pressurizer	4.2-5
4.2.2.5	Pressurizer Support Structure	4.2-6
4.2.2.6	Steam Generators	4.2-6
4.2.2.7	Reactor Coolant Pumps	4.2-7
4.2.2.8	Pump Support Structure	4.2-10
4.2.2.9	Pressurizer Relief Tank	4.2-10
4.2.2.10	Piping	4.2-11
4.2.2.11	Pipe Rupture Restraints	4.2-12
4.2.2.12	Valves	4.2-16
4.2.3	Pressure-Relieving Devices	4.2-17
4.2.4	Protection Against Proliferation of Dynamic Effects	4.2-18
4.2.5	Materials of Construction	4.2-18
4.2.5.1	Reactor Vessel	4.2-19
4.2.5.2	Steam Generator	4.2-19
4.2.5.3	Pressurizer	4.2-19
4.2.5.4	Core Structure	4.2-19
4.2.6	Maximum Heating and Cooling Rates	4.2-22
4.2.7	Water Chemistry	4.2-22
4.2.8	Reactor Coolant Flow Measurements	4.2-23
4.2.9	Reactor Coolant System Temperature	4.2-23
4.2.10	Loose Parts Monitoring System	4.2-25
4.3	SYSTEM DESIGN EVALUATION	4.3-1
4.3.1	Safety Factors	4.3-1
4.3.1.1	Reactor Vessel	4.3-1
4.3.1.2	Steam Generators	4.3-3
4.3.2	Reliance on Interconnected Systems	4.3-4
4.3.3	System Integrity	4.3-4
4.3.4	Overpressure Protection	4.3-4

Chapter 4: Reactor Coolant System

Table of Contents

Section	Title	Page
4.3.5	System Incident Potential	4.3-5
4.4	TESTS AND INSPECTIONS	4.4-1
4.4.1	Reactor Coolant System Inspection	4.4-1
4.4.1.1	Non-Destructive Inspection of Material and Components	4.4-1
4.4.1.2	Electroslag Weld Quality Assurance	4.4-6
4.4.1.3	Piping Elbows	4.4-6
4.4.1.4	Reactor Coolant Pump Casings	4.4-7
4.4.1.5	In-Process Control of Variables	4.4-8
4.4.1.6	In-Service Inspection	4.4-10
4.4.1.7	Reactor Building Containment Vessel In-Service Inspection	4.4-11

Chapter 4: Reactor Coolant System

List of Tables

Table	Title	Page
4.1-1	Reactor Coolant System Design Parameters and Pressure Settings	4.1-19
4.1-2	Reactor Vessel Design Data	4.1-20
4.1-3	Pressurizer & Pressurizer Relief Tank Design Data	4.1-21
4.1-4	1780 MWt NSSS Steam Generator Design Data	4.1-22
4.1-5	Reactor Coolant Pumps Design Data	4.1-24
4.1-6	Reactor Coolant Piping Design Data	4.1-25
4.1-7	Reactor Coolant System Design Pressure Drop	4.1-26
4.1-8	Reactor Coolant System Operating Transients (40-Year Plant Life)	4.1-27
4.1-9	Reactor Coolant Pressure Boundary-Code Requirements	4.1-29
4.2-1	Materials of Construction of the Reactor Coolant System Components	4.2-27
4.2-2	Reactor Coolant Water Chemistry Specification	4.2-29
4.2-3	Reactor Vessel Support Structure Cooling Data	4.2-30
4.2-4	Reactor Vessel Toughness Data	4.2-31
4.3-1	Summary of Primary Plus Secondary Stress Intensity for Components of the Reactor Vessel	4.3-8
4.3-2	Summary Cumulative Fatigue Usage Factors for Components of the Reactor Vessel	4.3-9
4.4-1	Reactor Coolant System Preservice And Fabrication Inspections	4.4-14
4.4-2	Surveillance Capsule Withdrawal Schedule	4.4-18

Chapter 4: Reactor Coolant System

List of Figures

Figure	Title	Page
4.1-1	Reactor Vessel Nozzles	4.1-31
4.2-1	Reactor Coolant System Process-Flow Diagram	4.2-33
4.2-2	Kewaunee Reactor Vessel Schematic	4.2-34
4.2-3	Schematic of Reactor Vessel Support	4.2-35
4.2-4	Temperature Drop in the Reactor Support System	4.2-36
4.2-5	Pressurizer	4.2-37
4.2-6	Steam Generator	4.2-38
4.2-7	Reactor Coolant Controlled Leakage Pump	4.2-39
4.2-8	Reactor Coolant Pump Estimated Performance Characteristics	4.2-40
4.2-9	Reactor Coolant Pump Flywheel	4.2-41
4.2-10	Reactor Coolant Pump Flywheel Stress	4.2-42
4.2-11	KPS Coordinated Lithium Program	4.2-43
4.4-1	Surveillance Capsule Elevation View	4.4-19
4.4-2	Surveillance Capsule Plan View	4.4-20

Intentionally Blank

CHAPTER 4
REACTOR COOLANT SYSTEM

The Reactor Coolant System (RCS), shown in the Flow Diagram, Figure 4.2-1, consists of two identical heat transfer loops connected in parallel to the reactor vessel. Each loop contains a circulating pump and a steam generator. The system also includes a pressurizer, pressurizer relief tank, connecting piping, and instrumentation necessary for operational control and protection.

4.1 DESIGN BASES

4.1.1 Performance Objectives

The RCS transfers the heat generated in the core to the steam generators where steam is generated to drive the turbine generator. Borated demineralized light water is circulated at the flow rate and temperature consistent with achieving the reactor core thermal-hydraulic performance presented in Chapter 3. The water also acts as a neutron moderator and reflector and as a solvent for the neutron absorber used in chemical shim control.

The RCS provides a boundary for containing the coolant under operating temperature and pressure conditions. It serves to confine radioactive material and limits to acceptable values any release to the secondary system and to other parts of the plant under conditions of either normal or abnormal reactor operation. During transient operation the systems heat capacity attenuates thermal transients. The RCS accommodates coolant volume changes within the protection system criteria.

By appropriate selection of the inertia of the reactor coolant pumps, the thermal-hydraulic effects, which result from a loss-of-flow situation, are reduced to a safe level during the pump coastdown. The layout of the system ensures the natural circulation capability following a loss of flow to permit plant cooldown without overheating the core. The system serves as part of the Safety Injection System to ensure cooling water delivery to the core during a loss-of-coolant accident (LOCA).

4.1.2 General Design Criteria

General design criteria, which apply to the RCS, are given below.

4.1.2.1 Quality Standards

Criterion: Those systems and components of reactor facilities, which are essential to the prevention or the mitigation of the consequences of nuclear accidents, which could cause undue risk to the health and safety of the public shall be identified and then designed, fabricated, and erected to quality standards that reflect the importance of the safety function to be performed. Where generally recognized codes and standards pertaining to design, materials, fabrication, and inspection

are used, they shall be identified. Where adherence to such codes or standards does not suffice to assure a quality product in keeping with the safety function, they shall be supplemented or modified as necessary. Quality assurance programs, test procedures, and inspection acceptance criteria to be used shall be identified. An indication of the applicability of codes, standards, quality assurance programs, test procedures, and inspection acceptance criteria used is required. Where such items are not covered by applicable codes and standards a showing of adequacy is required (GDC 1).

The RCS is of primary importance with respect to its safety function in protecting the health and safety of the public.

Quality standards of material selection, design, fabrication and inspection conform to the applicable provisions of recognized codes and good nuclear practice (Section 4.1.7). Details of the Quality Assurance Programs test procedures and inspection acceptance levels are given in Section 4.3.1 and Section 4.4. Particular emphasis is placed on the assurance of quality of the reactor vessel to obtain material whose properties are uniformly within code specifications.

4.1.2.2 Performance Standards

Criterion: Those systems and components of reactor facilities, which are essential to the prevention or to the mitigation of the consequences of nuclear accidents which could cause undue risk to the health and safety of the public shall be designed, fabricated, and erected to performance standards that will enable such systems and components to withstand, without undue risk to the health and safety of the public the forces that might reasonably be imposed by the occurrence of an extraordinary natural phenomenon such as earthquake, tornado, flooding condition, high wind or heavy ice. The design bases so established shall reflect:

1. appropriate consideration of the most severe of these natural phenomena that have been officially recorded for the site and the surrounding area, and
2. an appropriate margin for withstanding forces greater than those recorded to reflect uncertainties about the historical data and their suitability as a basis for design (GDC 2).

All piping, components and supporting structures of the RCS are designed as Class I equipment, i.e., they are capable of withstanding:

1. The Operational Basis Earthquake (OBE) ground acceleration within allowable working stresses.
2. The Design Basis Earthquake (DBE) ground acceleration acting in the horizontal and vertical direction simultaneously with no loss of capability to perform their safety function.

Allowable limits for the above are given in Appendix B.

The RCS is located in the Reactor Containment Vessel whose design, in addition to being a Class I structure, also considers accidents or other applicable natural phenomena. Details of the containment design are given in Chapter 5.

4.1.2.3 Records Requirements

Criterion: The reactor licensee shall be responsible for assuring the maintenance throughout the life of the reactor of records of the design, fabrication, and construction of major components of the plant essential to avoid undue risk to the health and safety of the public (GDC 5).

Records of the design of the plant are maintained at the plant and will be retained there throughout the life of the plant.

Records of fabrication are maintained in the manufacturers' plants as required by the appropriate Code. Construction records are being retained at the plant site for periods of time varying from a few years to the life of the plant.

4.1.2.4 Missile Protection

Criterion: Adequate protection for those Engineered Safety Features, the failures of which could cause an undue risk to the health and safety of the public, shall be provided against dynamic effects and missiles that might result from plant equipment failures (GDC 40).

The dynamic effects during blowdown following a loss-of-coolant accident are evaluated and taken into consideration in the detailed layout and design of the high-pressure equipment and barriers, which afford missile protection. Fluid and mechanical driving forces are calculated, and consideration is given to possible damage due to fluid jets and secondary missiles, which might be produced.

The steam generators are supported, guided and restrained in a manner which prevents rupture of the steam side of a generator, the steam lines and the feedwater piping as a result of forces created by a rupture of main auxiliary lines (accumulator injection, Residual Heat Removal (RHR), and pressurizer surge) at their connections to the RCS piping. These supports, guides and restraints also prevent rupture of the primary side of a steam generator as a result of forces created by a steam or feedwater line rupture at the steam generator nozzle.

The mechanical consequences of a pipe rupture are restricted by design such that the functional capability of the engineered safety features is not impaired. Further discussions of missile protection are given in Section 5.1.2, 6.1.1, 6.1.2, 14, and Appendix B.

4.1.3 Principal Design Criteria

The criteria, which apply solely to the RCS, are given below.

4.1.3.1 Reactor Coolant Pressure Boundary

Criterion: The Reactor Coolant Pressure Boundary shall be designed, fabricated and constructed so as to have an exceedingly low probability of gross rupture or significant uncontrolled leakage throughout its design lifetime (GDC 9).

The RCS in conjunction with its control and protective provisions is designed to accommodate the system pressures and temperatures attained under all expected modes of plant operation or anticipated system interactions, and maintain the stresses within applicable code stress limits.

Fabrication of the components, which constitute the pressure boundary of the RCS, was carried out in strict accordance with the applicable codes. In addition there are areas where specifications for RCS components go beyond the applicable codes. Details are given in Section 4.4.1.

The materials of construction of the pressure boundary of the RCS are protected by control of coolant chemistry from corrosion phenomena, which might otherwise reduce the system structural integrity during its service lifetime.

System conditions resulting from anticipated transients or malfunctions are monitored and appropriate action is automatically initiated to maintain the required cooling capability and to limit system conditions to a safe level.

The system is protected from overpressure by means of pressure relieving devices, as required by Section III of the ASME Boiler and Pressure Vessel Code.

Isolable sections of the system are provided with overpressure relieving devices discharging to closed systems such that the system code allowable relief pressure within the protected section is not exceeded.

4.1.3.2 Monitoring Reactor Coolant Leakage

Criterion: Means shall be provided to detect significant uncontrolled leakage from the Reactor Coolant Pressure Boundary (GDC 16).

Positive indications in the control room of leakage of coolant from the RCS to the Reactor Containment Vessel are provided by equipment, which permits continuous monitoring of containment air activity and humidity, and containment sump level.

This equipment provides indication of normal background, which is indicative of a basic level of leakage from the reactor coolant pressure boundary. Any increase in the observed

parameters is an indication of change within the containment, and the equipment provided is capable of monitoring this change. The basic design criterion is the detection of deviations from normal containment environmental conditions including air particulate activity, radiogas activity, humidity, condensate runoff and in addition, in the case of gross leakage, the liquid inventory in the process systems and containment sump.

Further details are supplied in Section 6.5.

4.1.3.3 Reactor Coolant Pressure Boundary Capability

Criterion: The Reactor Coolant Pressure Boundary shall be capable of accommodating without rupture the static and dynamic loads imposed on any boundary component as a result of an inadvertent and sudden release of energy to the coolant. As a design reference, this sudden release shall be taken as that which would result from a sudden reactivity insertion such as rod ejection (unless prevented by positive mechanical means), rod dropout, or cold water addition (GDC 33).

The reactor coolant boundary is shown to be capable of accommodating without rupture, the static and dynamic loads imposed as a result of a sudden reactivity insertion such as an Rod Control Cluster Assemblies (RCCA) ejection. Details of this analysis are provided in Chapter 14.

The operation of the reactor is such that the severity of an ejection accident is inherently limited. Since RCCAs are used to control load variations only and boron dilution is used to compensate for core depletion, only the RCCA in the controlling groups are inserted in the core at power, and at full power these RCCA may be partially inserted. A RCCA insertion limit monitor is provided as an administrative aid to the operator to insure that this condition is met.

By using the flexibility in the selection of RCCA groupings, radial locations and position as a function of load, the design limits the maximum fuel temperature for the highest worth ejected RCCA accident to a value which precludes any resultant damage to the RCS pressure boundary from possible excessive pressure surges.

The failure of a rod drive mechanism housing causing an RCCA to be rapidly ejected from the core is evaluated as a theoretical, though not a credible accident. While limited fuel damage could result from this hypothetical event, any released fission products are confined to the RCS and the Reactor Containment Vessel. The environmental consequences of RCCA ejection are less severe than from the LOCA, for which public health and safety is shown to be adequately protected in Chapter 14.

4.1.3.4 Reactor Coolant Pressure Boundary Rapid Propagation Failure Prevention

Criterion: The reactor coolant pressure boundary shall be designed and operated to reduce to an acceptable level the probability of a rapidly propagating type failure. Consideration is given:

1. to the provisions for control over service temperature and irradiation effects, which may require operational restrictions;
2. to the design and construction of the reactor pressure vessel in accordance with applicable codes including those which establish requirements for absorption of energy within the elastic strain energy range and for absorption of energy by plastic deformation; and
3. to the design and construction of reactor coolant pressure boundary piping and equipment in accordance with applicable codes (GDC 34).

The reactor coolant pressure boundary is designed to reduce to an acceptable level the probability of a rapidly propagating type failure. A leak-before-break analysis has been performed on the pressurizer surge line (Reference 7), and NRC approval is documented in Reference 6. Additionally, leak-before-break analysis has been performed and found acceptable by the NRC for the RCS primary loops (Reference 8) and the RHR, Safety Injection Accumulator, and Safety Injection (SI) System lines attached to the RCS (Reference 9).

The scope of the piping within the RHR, accumulator injection, and SI System piping for which leak-before-break applies requires further definition. For the RHR System, the leak-before-break evaluation addressed the 8-inch diameter nominal pipe size (NPS) piping in RHR Loop A from its connection to the Loop A hot leg outlet nozzle to RHR isolation valve RHR-1A and the 8-inch NPS piping in RHR Loop B from its connection to the Loop B hot leg outlet nozzle to RHR isolation valve RHR-1B. For the SI System, the leak-before-break evaluation addressed the 6-inch diameter NPS piping in SI Loop A from its connection to the Loop A cold leg inlet nozzle to SI check valve SI-13A and the 6-inch NPS piping in SI Loop B from its connection to the Loop B cold leg inlet nozzle to SI check valve SI-13B. For the accumulator injection system, the leak-before-break evaluation addressed the 12-inch diameter NPS piping in accumulator injection Loop A from its connection to the Loop A cold leg to check valve SI-22A and the 12-inch NPS piping in accumulator Loop B from its connection to the Loop B cold leg to check valve SI-22B. Finally, the analysis addressed the application of leak-before-break to one 6-inch capped nozzle on each of the Loop A and Loop B hot legs.

In the core region of the reactor vessel it is expected that the notch toughness of the material will change as a result of fast neutron exposure. This change is evidenced as a shift in the Nil Ductility Transition (NDT) temperature, which is factored into the operating procedures in such a manner that full operating pressure is not obtained until the affected vessel material is above the now higher Design Transition Temperature (DTT) and in the ductile material region. The pressure

during startup and shutdown at the temperature below NDT temperature is maintained below the threshold of concern for safe operation.

The DTT is a minimum of NDT temperature plus 60°F and dictates the procedures to be followed in the hydrostatic test and in plant operations to avoid excessive cold stress. The value of the DTT is increased during the life of the plant as required by the expected shift in the NDT temperature, and as confirmed by the experimental data obtained from irradiated specimens of reactor vessel materials during the plant lifetime. Further details are given in Section 4.4.

All pressure-containing components of the RCS are designed, fabricated, inspected and tested in conformance with the applicable codes. Further details are given in Section 4.1.7.

4.1.3.5 Reactor Coolant Pressure Boundary Surveillance

Criterion: Reactor coolant pressure boundary components shall have provisions for inspection, testing, and surveillance of critical areas by appropriate means to assess the structural and leaktight integrity of the boundary components during their service lifetime. For the reactor vessel, a material surveillance program conforming with current applicable codes shall be provided (GDC 36).

The design of the reactor vessel and its arrangement in the system permits access during the service life to the entire internal surfaces of the vessel and to the following external zones of the vessel: the flange seal surface, the flange OD down to the cavity seal ring, the closure head except around the drive mechanism adapters and the nozzle to reactor coolant piping welds. The reactor arrangement within the containment provides sufficient space for inspection of the internal surfaces of the reactor coolant piping and components, except for the area of pipe within the primary shielding concrete.

Monitoring of the NDT temperature properties of the core region plates, forgings, weldments and associated heat treated zones are performed in accordance with ASTM E 185-82 (Recommended Practice for Surveillance Tests for Nuclear Reactor Vessels). Samples of reactor vessel core region materials are retained and catalogued in case future engineering development shows the need for further testing.

The material properties surveillance program includes not only the conventional tensile and impact tests, but also fracture mechanics tests. The fracture mechanics specimens are the Wedge Opening Loading (WOL) type specimens. The observed shifts in NDT temperature of the core region materials with irradiation will be used to confirm the calculated limits on startup and shutdown transients.

To define permissible operating conditions below DTT a pressure range is established, which is bounded by a lower limit for pump operation and an upper limit, which satisfies reactor vessel stress criteria. To allow for thermal stresses during heatup or cooldown of the reactor

vessel, an equivalent pressure limit is defined to compensate for thermal stress as a function of rate of change of coolant temperature. Since the normal operating temperature of the reactor vessel is well above the maximum expected DTT, brittle fracture during normal operation is not considered to be credible.

4.1.4 Design Characteristics

4.1.4.1 Design Pressure

The Reactor Coolant System design and operating pressure together with the safety, power relief and pressurizer spray valve set points, and the protection system set point pressures are listed in Table 4.1-1. The design pressure allows for operating transient pressure changes. The selected design margin considers core thermal lag, coolant transport times and pressure drops, instrumentation and control response characteristics, and system relief valve characteristics. The design pressures and data for the respective system components are listed in Table 4.1-2 through Table 4.1-6. Table 4.1-7 gives the design pressure drop of the system components.

4.1.4.2 Design Temperature

The design temperature for each component is selected to be above the maximum coolant temperature in that component under all normal and anticipated transient load conditions. The design and operating temperatures of the system components are listed in Table 4.1-2 through Table 4.1-6.

4.1.4.3 Seismic Loads

The seismic loading conditions are established by the OBE and the DBE. The former is selected to be typical of the largest probable ground motion based on the site seismic history. The latter is selected to be the largest potential ground motion at the site based on seismic and geological factors and their uncertainties.

For the OBE loading condition, the nuclear steam supply system is designed to be capable of continued safe operation. Therefore, for this loading condition, critical structures and equipment needed for this purpose are required to operate within normal design limits. The seismic design for the DBE is intended to provide a margin in design that assures capability to shut down and maintain the nuclear facility in a safe condition. In this case, it is only necessary to ensure that the Reactor Coolant System components do not lose their capability to perform their safety function. This has come to be referred to as the “no-loss-of-function” criterion and the loading condition as the “no-loss-of-function earthquake” loading condition.

For the combination of normal plus OBE loadings, the stresses in the support structures are kept within the limits of the applicable codes.

For the combination of normal plus DBE loadings, the stresses in the support structures are limited to values necessary to ensure their integrity, and to keep the stresses in the RCS components within the allowable limits as given in Appendix B.

4.1.5 Cyclic Loads

To provide the necessary high degree of integrity for the components in the RCS, transient conditions are selected for fatigue evaluation based on a conservative estimate of the magnitude and frequency of the temperature and pressure transients resulting from normal operation, normal and abnormal load transients and accident conditions. To a large extent, the specific transient operating conditions that were considered for equipment fatigue analyses were based upon engineering judgment and experience. Those transients are chosen which are representative of transients to be expected during plant operation and which are sufficiently severe or frequent to be of possible significance to component cyclic behavior. The number of thermal and loading cycles used for fatigue evaluation are given in Table 4.1-8.

Clearly it is difficult to discuss in absolute terms the transients that the plant will actually experience during the forty years operating life. For clarity, however, each transient condition is discussed in order to make clear the nature and basis for the various transients.

4.1.5.1 Heatup and Cooldown

The normal heatup or cooldown cases are conservatively represented by a continuous operation performed at a uniform temperature rate of 100°F per hour.

For these cases, the heatup occurs from ambient to the no-load temperature and pressure condition and the cooldown represents the reverse situation. In actual practice, the rate of temperature change of 100°F per hour will not be attained because of other limitations such as:

1. Material NDT temperature considerations which establish maximum permissible temperature rates of change, as a function of plant pressure and temperature, which are below the design rate of 100°F per hour. (See Tech. Spec. Section 3.1.b for discussion of limits).
2. Slower initial heatup rates when using pumping energy only.
3. Interruptions in the heatup and cooldown cycles due to such factors as drawing a pressurizer steam bubble, RCCA withdrawal, sampling, water chemistry and gas adjustments.

Two hundred complete heatup and cooldown operations are specified, which corresponds to five such occurrences per year for the forty-year plant design life. For the ideal plant only one heatup and one cooldown would occur per 100 percent full power year, i.e., the period between refueling. In practice, experience to date indicates that during the first year or so of operation additional unscheduled plant cooldowns may be necessary for plant maintenance; the frequency of maintenance shutdowns reduce as the plant matures. As experience was gained with Yankee-Rowe, the number of shutdowns decreased; for example Core II ran for a year from 1962

to 1963 with no cooldowns. The outage record at Kewaunee during the first fifteen years of commercial operation is sufficiently low for the plant to have attained a capacity factor, using MDC net, of 81.4 percent and an availability of 84.4 percent.

4.1.5.2 Unit Loading and Unloading

The unit loading and unloading cases are conservatively represented by a continuous and uniform ramp power change of 5 percent per minute between 15 percent load and full load. This load swing is the maximum possible consistent with operation with automatic reactor control. The reactor coolant temperature will vary with load as prescribed by the temperature control system. The number of each cycle is specified at 18,300 times or 1 time per day with approximately 40 percent margin for plants with forty-year design life.

4.1.5.3 Step Load Increase and Decrease of 10%

The ± 10 percent step change in load demand is a control transient, which is assumed to be a change in turbine control valve opening, which might be occasioned by disturbances in the electrical network into which the plant output is tied.

The Reactor Control System is designed to restore plant equilibrium without reactor trip following a ± 10 percent step change in turbine load demand initiated from nuclear plant equilibrium conditions in the range between 15 percent and 100 percent full load, the power range for automatic reactor control. In effect, during load change conditions, the Reactor Control System attempts to match turbine and reactor outputs in such a manner that peak reactor coolant temperature is minimized and reactor coolant temperature is restored to its programmed set point at a sufficiently slow rate to prevent excessive pressurizer pressure decrease.

Following a step decrease in turbine load, the secondary side steam pressure and temperature initially increase since the decrease in nuclear power lags behind the step decrease in turbine load. During the same increment of time, the Reactor Coolant System average temperature and pressurizer pressure also initially increase. Because of the power mismatch between the turbine and reactor and the increase in reactor coolant temperature, the control system automatically inserts the control rods to reduce core power. With load decrease, the reactor coolant temperature will be ultimately reduced from its peak value to a value below its initial equilibrium value at the inception of the transient. The reactor coolant average temperature set point change is made as a function of turbine-generator load as determined by first-stage turbine pressure measurement. The pressurizer pressure will also decrease from its peak pressure value and follow the reactor coolant decreasing temperature trend. At some point during the decreasing pressure transient, the saturated water in the pressurizer begins to flash, which reduces the rate of pressure decrease. Subsequently, the pressurizer heaters come on to restore the plant pressure to its normal value.

Following a step load increase in turbine load, the reverse situation occurs, i.e., the secondary side steam pressure and temperature initially decrease and the reactor coolant average temperature and pressure initially decrease. The control system automatically withdraws the control rods to increase core power. The decreasing pressure transient is reversed by actuation of the pressurizer heaters and eventually the system pressure is restored to its normal value. The reactor coolant average temperature will be raised to a value above its initial equilibrium value at the beginning of the transient.

The number of cycles is specified at 2000 times or 50 per year for the forty-year plant design life.

4.1.5.4 Large Step Decrease in Load

This transient applies to a step decrease in turbine load from full power of such magnitude that the resultant rapid increase in reactor coolant average temperature and secondary side steam pressure and temperature will automatically initiate a secondary side steam dump that will prevent a reactor shutdown or lifting of steam generator safety valves. The plant can accept a load rejection of 50 percent from full power without reactor trip. This signifies that a steam dump system will provide a heat sink to accept 40 percent of the turbine load. The remaining 10 percent of the total load change is assumed by the Reactor Rod Control System as noted in Chapter 3. If a steam dump system was not provided to cope with this transient, there would be such a strong mismatch between what the turbine is asking for and what the reactor is furnishing that a reactor trip and lifting of steam generator safety valves would occur.

The number of occurrences of this transient is specified at 200 times or 5 per year for the forty-year plant design life.

4.1.5.5 Loss of Load

This transient applies to a step decrease in turbine load from full power occasioned by the loss of turbine load without immediately initiating a reactor trip and represents the most severe transient on the RCS. The reactor and turbine eventually trip as a consequence of a high pressurizer level trip initiated by the Reactor Protection System. The pressurizer safety valves relieving capacity is sized to accept a complete loss of load without an immediate turbine or reactor trip. No credit is taken for the operation of the pressurizer power operated relief valves. The basis for these valves is to prevent a reactor trip on high pressurizer pressure following the design load rejection transient with automatic steam dump. (See large step decrease in load.) The power operated relief valves will also reduce the probability of actuating the self-actuated safety valves.

The number of occurrences of this transient is specified at 80 times or 2 per year for the forty-year plant design life. Since redundant means of tripping the reactor upon turbine trip are

provided as part of the Reactor Protection System, transients of this nature are not expected, but are included to insure a conservative design.

4.1.5.6 Loss of Power

This transient applies to a blackout situation involving the loss of off-site electrical power to the plant and a reactor and turbine trip, on low reactor coolant flow, culminating in a complete loss of plant electrical power. Under these circumstances, the reactor coolant pumps are de-energized and following the coastdown of the reactor coolant pumps, natural circulation builds up in the system to some equilibrium value. This condition permits removal of core residual heat through the steam generators which at this time are receiving feedwater from the Auxiliary Feedwater System operating from diesel generator power or steam driven auxiliary feedwater pump. Steam is removed for reactor cooldown through atmospheric power-operated relief valves provided for this purpose.

The number of occurrences of this transient is specified at 40 times or 1 per year for the forty-year plant design life.

4.1.5.7 Loss of Flow

This transient applies to a partial loss of flow accident from full power in which a reactor coolant pump is tripped out of service as a result of a loss of power to that pump. The consequences of such an accident at high power level are a reactor and turbine trip, on low reactor coolant flow, followed by automatic opening of the steam dump system and flow reversal in the affected loop. The flow reversal results in reactor coolant at cold-leg temperature, being passed through the steam generator and cooled still further. This cooler water then passes through the hot-leg piping and enters the reactor vessel outlet nozzles. The net result of the flow reversal is a sizeable reduction in the hot-leg coolant temperature of the affected loop.

The number of occurrences of this transient is specified at 80 times or 2 per year for the forty-year plant design life.

4.1.5.8 Reactor Trip From Full Power

A reactor trip from full power may occur from a variety of causes resulting in temperature and pressure transients in the RCS and in the secondary side of the steam generator. This is the result of continued heat transfer from the reactor coolant in the steam generator. The transient continues until the reactor coolant and steam generator secondary side temperatures are in equilibrium at zero power conditions. A continued supply of feedwater and controlled dumping of secondary steam remove the core residual heat and prevent the steam generator safety valves from lifting. The reactor coolant temperature and pressure undergo a rapid decrease from full-power values as the Reactor Protection System causes the RCCAs to move into the core.

The number of occurrences of this transient is specified at 400 times or 10 per year for the forty-year plant design life.

4.1.5.9 Turbine Roll Test

This transient was imposed upon the plant during the hot functional test period for turbine cycle checkout. Reactor coolant pump power was used to heat the reactor coolant to operating temperature and the steam generated was used to perform a turbine roll test.

The number of such test cycles is specified at 10 times to be performed at the beginning of plant operating life prior to irradiation.

4.1.5.10 Hydrostatic Test Conditions

The pressure tests are outlined below:

1. Primary Side Hydrostatic Test Before Initial Startup at 3107 psig

   The pressure tests covered by this section include both shop and field hydrostatic tests, which occur as a result of component or system testing. This hydro test is performed at a water temperature, which is compatible with reactor vessel material DTT requirements, which shift with lifetime and a maximum test pressure of 3107 psig. In this test, the primary side of the steam generator was pressurized to 3107 psig coincident with the secondary side pressure of 0 psig. The RCS has been analyzed for 5 cycles of this hydro test.

2. Secondary Side Hydrostatic Test Before Initial Startup

   The secondary side of the steam generator is pressurized to 1356 psig with a minimum water temperature of 120°F coincident with the primary side at 0 psig.

   The steam generator has been analyzed for 5 cycles of this test. Normally only one test will be made to satisfy the code requirements and this will be made at the site after installation.

3. Primary Side Leak Test

   Subsequent to each time the primary system has been opened, a leak test will be performed. During this test the primary system pressure will be raised to a maximum of 2280 psig (1.02 x normal operating pressure). If no welded repairs have been made to the primary system the pressure of the leak test will be 2235 psig. The system temperature will be above Design Transition Temperature, while the system is checked for leaks.

   During this leak test, the design of the replacement steam generators is to have the secondary pressure at 1006 psig.

   For design purposes it is assumed that the primary side will experience 50 cycles of this test during the 40-year design life of the plant.

4. Steam Generator Tube In-Situ Hydrostatic Test

   In-situ hydrostatic testing is a method of simulating normal and faulted loads on in-service steam generator tubes to verify NRC Regulatory Guide structural requirements are met. In-situ tests are on an individual tube basis. Testing is performed at typical target pressures of the normal operating differential pressure, the faulted (MSLB) differential pressure, and the Regulatory Guide 1.121 target pressure of 3 times the normal operating differential pressure. Tubes which have been in-situ tested will count for one of the 5 cycles analyzed for the Primary Side Hydrostatic Test.

4.1.5.11 Pressurizer Surge and Spray Line Connections

The surge and spray nozzle connections at the pressurizer vessel are subject to cyclic temperature changes resulting from the transient conditions described previously. The various transients are characterized by variations in reactor coolant temperature, which in turn result in water surges into or out of the pressurizer. The surges manifest themselves as changes in system pressure which depending upon whether an increase or decrease in pressure occurs, result in introducing spray water into the pressurizer to reduce pressure or actuating the pressurizer heaters to increase pressure to the equilibrium value. To illustrate a load change cycle as it affects the pressurizer, consider a design step increase in load. The pressurizer initially experiences an out surge with a drop in system pressure, which actuates the pressurizer heaters to restore system pressure. As the RCS reacts, the reactor coolant temperature is increased which causes an in-surge into the pressurizer raising system pressure. As pressure is increased, the heaters go off and at some pressure set point; the spray valves open to limit the pressure rise and restore system pressure. Thus, the pressurizer surge nozzle is subjected to a temperature increase on the out surge, followed by a temperature decrease on the in-surge during this load transient. The pressurizer spray nozzle is subjected to a temperature decrease when the spray valve opens to admit reactor coolant cold-leg water into the pressurizer. The pressurizer experiences a reverse situation during a load decrease transient, i.e., an in-surge followed by an out surge. It is assumed that the spray valve opens to admit spray water into the pressurizer once at the design flow rate for each design step change in plant load. Thus, the number of occurrences for the spray nozzle corresponds to that shown for the system transients in Table 4.1-8.

During plant cooldown, spray water is introduced into the pressurizer to cool down the pressurizer and to remove gas from the reactor coolant. The maximum pressurizer cooldown rate is specified at 200°F per hour, which is twice the rate specified for the other RCS components.

4.1.5.12 Accident Conditions

The effect of the accident loading will be evaluated in combination with normal loads to demonstrate the adequacy to meet the stated plant safety criteria.

A brief description of each accident transient to be considered follows. In each case one occurrence has been evaluated.

1. Reactor Coolant Pipe Break

   As a result of the TMI accident, an industry-wide concern was raised over the potential loss of pressure vessel integrity resulting from thermal shock caused by a small-break-loss-of-coolant accident followed by the initiation of cold, high- pressure Safety Injection. This issue was initially addressed by TMI Action Plan Item II.K.2.13 and was later broadened in scope to include all over-cooling events and was studied as Unresolved Safety Issue A-49, "Pressurized Thermal Shock (PTS)." The specific concerns of Item II.K.2.13 were analyzed in the topical report found in Reference 1. The more general issue of PTS was resolved following an extensive review of the Kewaunee reactor pressure vessel from which it was determined that the reactor vessel meets the requirements of 10 CFR 50.61 for the projected operational life of the plant (See NRC SERs in Reference 2, Reference 3, Reference 4 and Reference 5).

   This accident involves the rupture of a RCS pipe resulting in a loss of primary coolant. It is conservatively assumed that the system pressure and temperature are reduced rapidly and the Safety Injection System is initiated to introduce a minimum of 40°F water into the RCS. The Safety Injection signal will also result in a turbine and reactor trip. Because of the rapid blowdown of coolant from the system and the comparatively large heat capacity of the metal sections of the components, it is likely that the metal is still at no-load temperature conditions when the minimum of 40°F Safety Injection water is introduced into the system.

   Figure 4.1-1 shows the location of the low-head injection nozzles. The injection flow penetrates the core barrel, however, the Safety Injection nozzle is not connected to the core barrel and a clearance is maintained under all conditions.

   In the event of a loss of coolant accident and subsequent operation of the Emergency Core Cooling System, cold water is injected from the accumulators, to the cold legs, through the inlet nozzles and downcomer, to the core.

   Thermal gradients through the core support components will originate transient thermal stresses. Results shows that the worst thermal stress case occurs to the core barrel. The barrel is affected by the cold water in the downcomer and the somewhat hotter water in the compartments between barrel and baffle, producing a thermal gradient across barrel wall. The lower support structure is cooled more uniformly because of the large and numerous flow holes and consequently thermal stresses are lower.

   The method used to obtain the maximum barrel stresses is as follows:

   a. Temperature distribution across the barrel wall is computed as a function of time taking into consideration water temperatures and film coefficients.

b. Assuming that the obtained thermal gradients are axisymmetrically distributed, which is conservative for stresses, maximum thermal stresses are computed in the barrel considered as an infinite cylinder.

c. Thermal stresses are added to primary stresses including seismic in order to obtain the maximum stress-state of the barrel.

Results of studies performed for different conditions show that maximum thermal stresses in the barrel wall are well below the allowable criteria given for design by Section III of the ASME Code.

1. Steam Line Break

For RCS component evaluation, the following conservative conditions were considered:

a. The reactor is initially in a hot, zero-load, just-critical condition, assuming all rods in except the most reactive rod, which is assumed to be stuck in its fully withdrawn position.

b. A steam line break occurs inside the containment resulting in a reactor and turbine trip.

c. Subsequent to the break, there is no return to power and the reactor coolant temperature cools down to 212°F.

d. The Safety Injection System pumps restore the reactor coolant pressure to 2200 psia.

The above conditions result in the most severe temperature and pressure variations, which the Reactor Coolant System components will encounter during a steam break accident.

2. Steam Generator Tube Rupture

This accident postulates the double-ended rupture of a steam generator tube resulting in a decrease in pressurizer level and reactor coolant pressure. Reactor trip will occur due to a Safety Injection signal on low pressurizer pressure. When the accident occurs, some of the reactor coolant blows down into the affected steam generator causing the level to rise. If the level rises sufficiently, a high-level alarm will occur and the feedwater regulating valve will close. Approximately thirty minutes after the rupture, the RCS pressure is reduced below the secondary safety valve settings (~1100 psia). At this time, the planned procedure for recovery from this accident is the reduction of reactor coolant pressure below the steam safety valve setting, which isolates the steam generator. Therefore, this accident will result in a transient which is no more severe than that associated with a reactor trip. For this reason, it requires no special treatment insofar as fatigue evaluation is concerned.

4.1.6 Service Life

The service life of RCS pressure components depends upon the end-of-life material radiation damage, unit operational thermal cycles, quality manufacturing standards, environmental protection, and adherence to established operating procedures.

The reactor vessel is the only component of the RCS, which is exposed to a significant level of neutron irradiation and it is therefore the only component, which is subject to any appreciable material radiation damage effects.

The NDT shift of the vessel material and welds during service, due to radiation damage effects is monitored by a radiation damage surveillance program, which conforms with ASTM E185-70 standards.

Reactor vessel design is based on the transition temperature method of evaluating the possibility of brittle fracture of the vessel material, as a result of operations such as leak testing and plant heatup and cooldown.

To establish the service life of the RCS components as required by the ASME (Section III), Boiler and Pressure Vessel Code for Class "A" Vessels, the unit operating conditions have been established for the forty-year design life. These operating conditions include the cyclic application of pressure loadings and thermal transients.

The number of thermal and loading cycles used for design purposes are listed in Table 4.1-8.

4.1.7 Codes and Classifications

During construction and pre-service operation all original pressure-containing components of the RCS were designed, fabricated, inspected and tested in conformance with the applicable codes listed in Table 4.1-9. Applicable codes for the replacement reactor vessel head, replacement CRDMs are listed in Table 4.1-9.

The RCS is classified as Class I for seismic design, requiring that there will be no loss of function of such equipment in the event of the Design Basis Earthquake acting in the horizontal and vertical directions simultaneously, when combined with the primary steady state stresses. Further details of the design bases are given in Appendix B.

Since power operation started in 1974, all pressure-containing components of the RCS have been inspected, tested and if necessary modified in accordance with the requirements of 10 CFR 50.55a.

The NRC has reviewed the material properties and chemical composition of the intermediate-to-lower-shell circumferential weld of the pressure vessel (the controlling material for pressurized thermal shock) and found them acceptable. The staff, also reviewed a revised estimate of the fast neutron fluence ($E > 1MeV$) on the inside surface of the vessel wall and concluded that the Kewaunee reactor pressure vessel meets the toughness requirements of 10 CFR 50.61 for at least 40 calendar years of operation (see NRC SERs in Reference 3, Reference 4 and Reference 5).

4.1 References

1. WCAP-10019, "Summary Report on Reactor Vessel Integrity for Westinghouse Operating Plants." Westinghouse Owner's Group Letter OG-66 from O. D. Kingsley (Alabama Power) to H. R. Denton (NRC), December 30, 1981
2. NRC SER, S. A. Varga (NRC) to C .W. Giesler (WPS) Letter No. K-84-130, June 18, 1984
3. NRC SER, D. L. Wigginton (NRC) to D. C. Hintz (WPS) Letter No. K-87-135, July 21, 1987
4. NRC SER, J. G. Giitter (NRC) to C. R. Steinhardt (WPS) Letter No. K-89-122, May 26, 1989
5. NRC SER, A. T. Gody (NRC) to K. H. Evers (WPS) Letter No. K-89-234, November 21, 1989
6. NRC SER, A. G. Hansen (NRC) to C. A. Schrock (WPS) Letter No. K-92-005, January 3, 1992
7. "Technical Justification for Eliminating Pressurizer Surge Line Rupture as the Structural Design Basis for Kewaunee Nuclear Plant," WCAP-12875 (Westinghouse Proprietary Class 2), June 1991
8. NRC SER, K. E. Perkins (NRC) to D. C. Hintz (WPSC), Letter No. K-88-032, February 16, 1988, "Application of Leak-Before-Break Technology as a Basis for Kewaunee Nuclear Power Plant Steam Generator Snubber Reduction"
9. NRC SER, J. G. Lamb (NRC) to T. Coutu (NMC), Letter No. K-02-080, September 5, 2002, "Kewaunee Nuclear Power Plant -Review of Leak-Before-Break Evaluation for the Residual Heat Removal, Accumulator Injection Line and Safety Injection System (TAC No. MB1301)"
10. Mitsubishi Heavy Industries, LTD Document L5-01DE510, Rev. 1, Addendum 2, "Nuclear Management Company - Kewaunee Nuclear Power Plant, Replacement Reactor Vessel Closure Head - Design Report," (Westinghouse Electric Company WCAP-16237-P)
11. Mitsubishi Heavy Industries, LTD Document KW-KCS-04-0002, "Nuclear Management Company - Kewaunee Nuclear Power Plant, Replacement Control Rod Drive Mechanism - Design Report," (Westinghouse Electric Company WCAP-16238-P)

Table 4.1-1
Reactor Coolant System Design Parameters and Pressure Settings

Total Primary Heat Output, MWt	1780
Total Primary Heat Output, Btu/hr	6075E+6
Number of Loops	2
Coolant Volume (liquid), including pressurizer volume, at full power, ft^3	6191
Total Reactor Coolant Flow, gpm (Thermal Design Flow Rate including bypass)	178,000
	Pressure, psig
Design Pressure	2485
Operating Pressure (at pressurizer)	2235
Safety Valves	2485
Power Relief Valves	2335
Pressurizer Spray Valves (open)	2260
High Pressure Trip, nominal plant setting (typical)	2377
High Pressure Alarm	2310
Low Pressure Trip, nominal plant setting (typical)	1904
Low Pressure Alarm	2185
Hydrostatic Test Pressure (Cold), Initial Hydro Only	3107

Table 4.1-2
Reactor Vessel Design Data

Design/Operating Pressure, psig	2485/2235
Hydrostatic Test Pressure (cold), psig	3110
Design Temperature, °F	650
Overall Height of Vessel and Closure Head, ft-in. (Bottom head OD to top of Control Rod Mechanism Housing)	39-1.28
Water Volume (with core and internals in place), ft^3	2473
Thickness of Insulation, minimum, in.	3
Number of Reactor Closure Head Studs	48
Diameter of Reactor Closure Head Studs, in.	6
Flange, ID, in.	128.31
Flange, OD, in.	157.25
ID at Shell, in.	132
Inlet Nozzle ID, in.	27.70
Outlet Nozzle ID, in.	29.20
Clad Thickness, minimum, in.	0.156
Lower Head Thickness, minimum, in.	4.125
Vessel Belt-Line Thickness, minimum, in.	6.5
Closure Head Thickness, in.	5.375
Reactor Coolant Vessel Inlet Temperature, Low/High* (ºF)	521.9/539.2
Reactor Coolant Vessel Outlet Temperature, Low/High* (ºF)	590.8/606.8
Reactor Coolant Flow, Thermal Design (gpm/loop)	89,000
Safety Injection Nozzle, number/size, in.	2/4

* Refers to low and high T_{avg} cases for design at Thermal Design Flow

Table 4.1-3
Pressurizer & Pressurizer Relief Tank Design Data

Pressurizer	
Design/Operating Pressure, psig	2485/2235
Hydrostatic Test Pressure (cold), psig	3107
Design/Operating Temperature, ºF	680/653
Water Volume, Full Power, ft^3*	600
Steam Volume, Full Power, ft^3	400
Surge Line Nozzle Diameter, in./Pipe Schedule	14/Sch140
Shell ID, in./minimum Shell Thickness, in.	84/4.1
Minimum Clad Thickness, in.	0.188
Electric Heaters Capacity, kW (total)	987.14
Heatup Rate of Pressurizer Using Heaters Only, ºF/hr	55 (Approximately)
Power Relief Valves:	
Number	2
Set Pressure (open), psig	2335
Capacity, lb/hr Saturated Steam/Valve	179,000
Safety Valves:	
Number	2
Set Pressure, psig	2485
Capacity (ASME Rated Flow), lb/hr/valve	345,000
Pressurizer Relief Tank	
Design Pressure, psig	100
Rupture Disc Release Pressure, psig	100
Design Temperature, ºF	340
Normal Water Temperature, ºF	120
Total Volume, ft^3	800
Rupture Disc Relief Capacity, lb/hr	65E+5

*60% of net internal volume (maximum calculated power)

Table 4.1-4
1780 MWt NSSS Steam Generator Design Data

(All quantities are for a single steam generator)		
Number of Steam Generators	2	
Design Pressure, Reactor Coolant/Steam, psig	2485/1085	
Reactor Coolant Hydrostatic Test Pressure (Tube Side - Cold), psig	3107	
Secondary Side Hydrostatic Test Pressure (Shell Side-Tube Side), psig	1356	
Design Temperature, Reactor Coolant/Steam, ºF	650/600	
Reactor Coolant Flow, Thermal Design, gpm/loop	89,000	
Total Heat Transfer Surface Area, ft²	54,500	
Heat Transferred, Btu/hr	3037E+6	
Steam Conditions at Full Load, Outlet Nozzle:	Low*	High*
Steam Flow, lb/hr	3.87E+6	3.88E+6
Steam Temperature, ºF	495.9	514.0
Steam Pressure, psia	656.0	771.0
Feedwater Temperature, ºF	437.1	437.1
Overall Height, ft-in.	67-8.0	
Shell OD, Upper/Lower, in.	177.75/135	
Shell Thickness, Upper/Lower, in.	3.62/2.82	
Number of U-Tubes	3592	
U-Tube Diameter, OD, in.	0.875	
Tube Wall Thickness (Average), in.	0.050	
Number of Manways/ID in. (2 primary and 2 secondary)	4/16	
Number of Handholes/ID, in.	2/6	

Table 4.1-4
1780 MWt NSSS Steam Generator Design Data

	1780 MWt (Low/High*)	Zero Power
Reactor Side Coolant Water Volume, ft^3	1133/1133	1133
Primary Side Fluid Heat Content, Btu	29.2E+6/29.5E+6	29.0E+6
Secondary Side Water Volume, ft^3	1811/1903	3381
Secondary Side Steam Volume, ft^3	3827/3736	2257
Secondary Side Fluid Heat Content, Btu	49.50E+6/53.63E+6	91.3E+6

* Refers to low and high T_{avg} cases for design at Thermal Design Flow.

Table 4.1-5
Reactor Coolant Pumps Design Data

Number of Pumps	2
Design Pressure/Operating Pressure, psig	2485/2235
Hydrostatic Test Pressure (cold), psig	3107
Design Temperature (casing), ºF	650
RPM at Nameplate Rating	1189
Suction, Temperature, ºF	544.5
Net Positive Suction Head, ft.	172
Developed Head, ft. (Rated)	296
Volumetric Flow (per pump), gpm (Rated)	89,000
Seal Water Injection (per seal), design point, gpm	8
Seal Water Return (per seal), design point, gpm	3
Pump Discharge Nozzle ID, in.	27 1/2
Pump Suction Nozzle ID, in.	31
Overall Unit Height, ft.	28.4
Water Volume (per pump), ft^3	56
Pump and Motor Moment of Inertia, $lb\text{-}ft^2$	80,000
Motor Data:	
Type	A-C Induction Speed, Air Cooled
Voltage	4000
Insulation Class	B Thermalastic Epoxy / F Thermalastic*
Phase	3
Frequency, Hz	60
Starting:	
Currrent, maximum, amp	4800
Input (hot reactor coolant), kW	4763
Input (cold reactor coolant), kW	6117
Power, hp (nameplate)	6000

* Data denoted with an asterisk is associated with the rotatable spare reactor coolant pump motor.

Table 4.1-6
Reactor Coolant Piping Design Data

Design/Operating Pressure, psig	2485/2235
Hydrostatic Test Pressure (cold), psig	3107
Design Temperature (casing), °F	650
Design Temperature (pressurizer surge line), ºF	680
Reactor Inlet Piping, ID, in.	27 1/2
Reactor Inlet Piping, Nominal Thickness, in.	2-11/16
Reactor Outlet Piping, ID, in.	29
Reactor Outlet Piping, Nominal Thickness, in.	2-13/16
Coolant Pump Suction Piping, ID, in.	31
Coolant Pump Suction Piping, Nominal Thickness, in.	3
Pressurizer Surge Line Piping, ID, in./Pipe Schedule	10/Sch 140*
Pressurizer Surge Line Piping, Nominal Thickness, in.	1
Water Volume (2 loops), ft^3	565

* Surge line fitted with a 14-in./10-in. adapter at the pressurizer.

Table 4.1-7
Reactor Coolant System Design Pressure Drop

	Pressure Drop, psi
Across Pump Discharge Leg	1.40
Across Vessel, Including Nozzles	39.5
Across Hot Leg	1.28
Across Steam Generator	33.57
Across Pump Suction Leg	3.28
Total Pressure Drop	79.03

Table 4.1-8
Reactor Coolant System Operating Transients (40-Year Plant Life)

	Operating Cycle	
	Expected	Design*
1. Heatup at 100ºF/hr	80	200
Cooldown at 100ºF/hr (pressurizer 200ºF/hr)	80	200
2. Plant loading at 5% of full power/min	2500	18,300
Plant unloading at 5% of full power/min	2500	18,300
3. Step load increase of 10% of full power	500	2000
Step load decrease of 10% of full power	500	2000
4. Large step decrease in load (with steam dump)	50	200
5. Loss of load (without immediate turbine or reactor trip)	40	80
6. Loss of power (blackout with natural circulation in reactor coolant system)	10	40
7. Loss of flow (partial loss of flow - one pump only)	20	80
8. Reactor trip from full power	40	400
9. Turbine roll test	2	10
10. Hydrostatic Test Conditions:		
a. Primary side hydrostatic test before initial startup at 3107 psig	2	5
b. Secondary side hydrostatic test before initial startup at 1356 psig.	2	5
11. Primary Side Leak Test	40	50
12. Accident Conditions:		
a. Reactor Coolant Pipe Break	-	1
b. Steam Pipe Break	-	1
c. Steam Generator Tube Rupture	-	-

Table 4.1-8
Reactor Coolant System Operating Transients (40-Year Plant Life)

	Operating Cycle	
	Expected	Design*
13. Steady-state fluctuations-the reactor coolant average temperature for purposes of design is assumed to increase and decrease a maximum of 6ºF in 1 minute. The corresponding reactor coolant pressure variation is less than 100 psi. It is assumed that an infinite number of such fluctuations will occur.		

* Estimated for equipment design purposes (40-year life) and not intended to be an accurate representation of actual transients or to reflect actual operating experience.

Table 4.1-9
Reactor Coolant Pressure Boundary-Code Requirements

Component	Code	Addenda and Code Cases
Reactor (Rx) Vessel	ASME III* Class A	1968 Edition through Winter 1968 Addenda
	Reactor Vessel Closure Head	
Original	ASME III[a] Class A	1968 Edition through Winter 1968 Addenda
Replacement	ASME III[a] Class 1	1998 Edition through 2000 Addenda (reconciliation to 1968 Edition through Winter 1968 Addenda in Reference 10)
	Full Length Control Rod Drive Mechanisms	
Original	ASME III[a] Class A	1965 Edition through Summer 1966 Addenda
Replacement	ASME III[a] Class 1	1998 Edition through 2000 Addenda (reconciliation to 1965 Edition through Summer 1966 Addenda in Reference 11)
Steam Generators - Replacement Lower Units	ASME Section III, Division 1, Subsection NB, Class 1	1986 Edition through 1987 Addenda
Steam Generators - Steam Domes	ASME III[a] Class C [c]	1965 Edition through Summer 1966 Addenda
Reactor Coolant Pump Casings	No Code (designed with ASME III[a] Article 4 as a guide)	1968 Edition No Addenda
Pressurizer	ASME III[a] Class	1965 Edition through Winter 1966 Addenda
Pressurizer Safety Valves	ASME III[a]	1968 Edition No Addenda
Power Operated Relief Valves	USAS B16.5	
Main Reactor Coolant System Piping	USAS B31.1[b] ASME Section III[d], Post 1980 Editions Approved By NRC	1967 Edition B31.1-55 Nuclear Code Cases

Table 4.1-9
Reactor Coolant Pressure Boundary-Code Requirements

Component	Code	Addenda and Code Cases
Reactor Coolant Valves	USAS B16.5 and MSS-SP-66	
Other Reactor Coolant Piping	USAS B31.1-1967[b]	(Applicable Nuclear Code Cases to B31.1-1955)

[a] ASME Boiler and Pressure Vessel Code, Section III, Nuclear Vessels.
[b] USA Standard Code for Pressure Piping - Power Piping.
[c] The steam domes from the original steam generator conform to the requirements for Class A vessels. The steam domes have been analyzed for a 40-year design life (beginning December 2001) in accordance with the design code of the replacement lower units.
[d] Alternative Design Code to USAS B31.1.

Figure 4.1-1 Reactor Vessel Nozzles

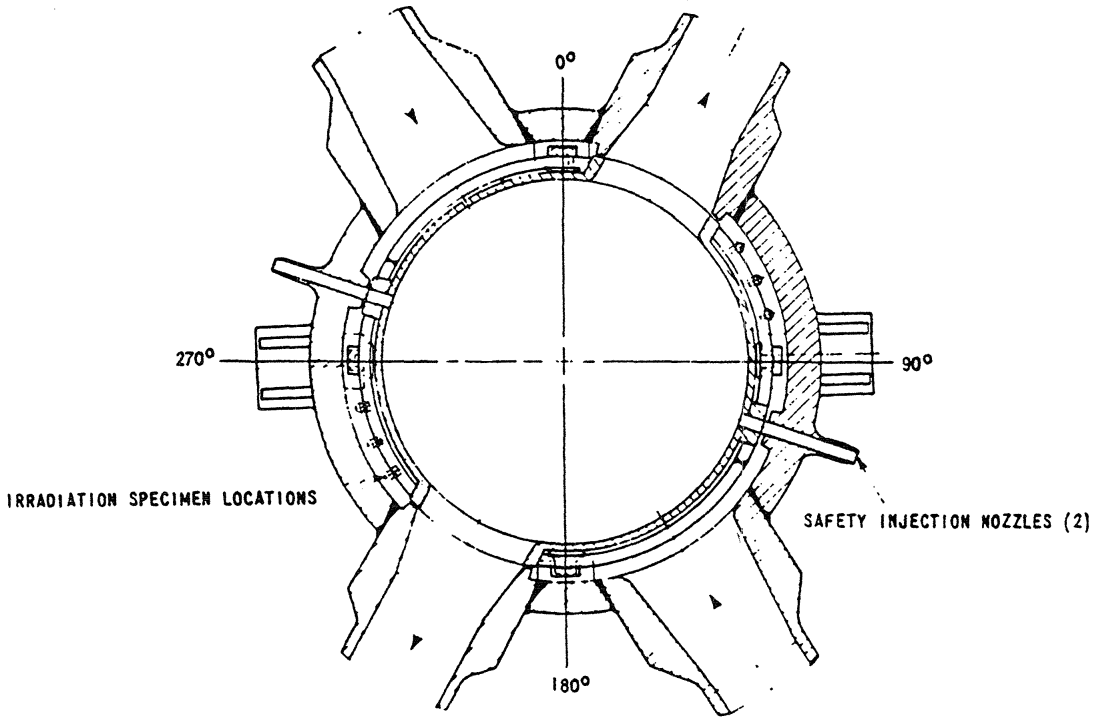

Intentionally Blank

4.2 SYSTEM DESIGN AND OPERATION

4.2.1 General Description

The RCS consists of two heat transfer loops connected in parallel to the reactor vessel. Each loop contains a steam generator, a circulating pump, loop piping, and instrumentation. The pressurizer surge line is connected to one of the loops. Auxiliary system piping connections into the reactor coolant piping are provided as necessary. A flow diagram of the RCS is shown in Figure 4.2-1. (Directional notations between flow diagrams are cross-referenced in Table 1.0-1).

The containment boundary shown on the flow diagram indicates those major components which are to be located inside the containment. The intersection of a process line with this boundary indicates a containment penetration.

RCS and components design data are listed in Table 4.1-1 through Table 4.1-6.

Pressure in the system is controlled by the pressurizer, where water and steam pressure are maintained through the use of electrical heaters and sprays. Steam can either be formed by the heaters or condensed by a pressurizer spray to minimize pressure variations due to contraction and expansion of the coolant. Instrumentation used in the pressure control system is described in Chapter 7. Spring-steam safety valves and power-operated relief valves are connected to the pressurizer and discharge to the pressurizer relief tank, where the discharged steam is condensed and cooled by mixing with water.

4.2.2 Components

4.2.2.1 Reactor Vessel

The reactor vessel is cylindrical in shape with a hemispherical bottom and a flanged and gasketed removable upper head. Figure 4.2-2 is a schematic of the reactor vessel. The materials of construction of the reactor vessel are given in Table 4.2-1. Reactor vessel toughness data is contained in Table 4.2-4.

Coolant enters the reactor vessel through inlet nozzles in a plane just below the vessel flange and above the core. The coolant flows downward through the annular space between the vessel wall and the core barrel into a plenum at the bottom of the vessel where it reverses direction. A small percentage also flows downward between the core baffle plates and core barrel to provide additional cooling of the barrel. Approximately 95 percent of the total coolant flow is effective for heat removal from the core. The remainder of the flow includes the flow through the RCC guide thimbles, the leakage across the downcomer from the inlet nozzles to the outlet nozzles, and the flow deflected into the head of the vessel for cooling the upper flange. All the coolant is combined and mixed in the upper plenum and the mixed coolant stream then flows out of the vessel through exit nozzles located on the same plane as the inlet nozzles.

A one-piece thermal shield, concentric with the reactor core, is located between the core barrel and the reactor vessel. The shield is attached to the core barrel. The shield, which is cooled by the coolant on its downward pass, protects the vessel by attenuating much of the gamma radiation and some of the fast neutrons, which escape from the core. This shield minimizes thermal stresses in the vessel, which result from heat generated by the absorption of gamma energy. It is illustrated in Figure 3.2-5 and is further described in Section 3.2.3.

Thirty-six core instrumentation nozzles are located on the lower head.

The upper head is fitted with a remotely operated vent, which allows venting of non-condensable gases from the reactor vessel head. This venting system satisfies the requirements of both 10 CFR 50.44(c)(3)(iii) and Item II.B.1 of NUREG-0737 (see NRC SERs in Reference 9, Reference 10 and Reference 11).

The reactor closure head and the reactor vessel flange are joined by 48 6-inch diameter studs. Two metallic o-rings seal the reactor vessel when the reactor closure head is bolted in place. A leakoff connection is provided between the two o-rings to monitor leakage across the inner o-ring. In addition, a leak-off connection is also provided beyond the outer o-ring seal.

The reactor vessel insulation is of the metallic reflective type (MRI), supported from the nozzles and consisting of inner and outer sheets of stainless steel spaced 3 inches apart and with multi-layer stainless steel foil as the insulating agent. The clearance between the insulation and the cylindrical portion of the reactor vessel is nominally ½ inch.

Insulation sheets are also provided for the reactor closure head and are supported on the refueling seal ledge and vent shroud support rings.

The MRI is designed to maintain 2 inches of clearance between the MRI and the RVCH to facilitate inspection of head assembly. The MRI is also designed with removable access doors adjacent to access doors in the CRDM cooling shroud. The remote access doors permit the use of a remote device to inspect the CRDM head adapter connection to the RVCH.

The reactor vessel contains the lower internals, upper internals, fuel assemblies, RCC assemblies, surveillance specimens, and in-core instrumentation. The reactor vessel internals are designed to direct the coolant flow, support the reactor core, and guide the control rods in the withdrawn position.

Ring forgings have been used in the following areas of the reactor vessel:

- Closure Head Flange
- Vessel Flange
- Upper Shell Course

- Four Primary and Two Safety Injection Nozzles
- Intermediate Shell Course
- Lower Shell Course
- Bottom Head Transition Ring

The pressure or strength bearing stainless steel components or parts in the reactor vessel and associated RCS that may become furnace sensitized[1] during the fabrication sequence include:

1. Reactor Vessel: Four primary nozzle safe ends and two Safety Injection nozzles-weld metal buttering
2. Steam Generator: Two primary nozzle safe ends per steam generator-stainless steel forgings

Westinghouse has evaluated the use of sensitized stainless steel and reactor components in pressurized water reactors. The results of this evaluation are summarized in Reference 1, which covers the nature of sensitization, conditions leading to stress corrosion, and associated problems with both sensitized and non-sensitized stainless steel. The results of extensive testing and service experience that justify the use of stainless steel in the sensitized condition for components in Westinghouse PWR Systems is presented in Reference 1. Steps taken to avoid severe sensitization are discussed in Section 4.2.5.

Surveillance specimens made from reactor vessel core region shell forging low-alloy steel material are located between the reactor vessel wall and the thermal shield. These specimens will be examined at selected intervals to evaluate reactor vessel material NDT changes as described in Section 4.4.1.

The reactor internals are described in detail in Section 3.2.3 and the general arrangement of the reactor vessel and internals is shown in Figure 3.2-3.

Reactor vessel design data are listed in Table 4.1-2.

4.2.2.2 Foreign Obligations

The reactor vessel closure head and control rod drive mechanisms for the Kewaunee Power Station were manufactured in Japan. Consequently, as stated in letters from the NRC dated December 16 and 17, 2004, use of this equipment (“foreign obligated equipment”) obligates Kewaunee Power Station to comply with certain peaceful use commitments and material tracking obligations specified in the U.S.-Japan Agreement for Peaceful Nuclear Cooperation. This equipment will not be used for any purpose that would result in any nuclear explosive device

1. The term “furnace sensitized” is interpreted as wrought austenitic stainless steel (>0.02C) components which have been post-weld heat treated; the temperature and minimum times are consistent with ASME Section III requirements.

(e.g., producing tritium for the weapons program). Additionally, export of this equipment will require similar peaceful use assurances from the proposed recipient country. Finally, all nuclear material used in or produced through the use of the reactor with this equipment will also become obligated to Japan so long as that equipment is in use. All nuclear material transactions and status reports must be adjusted accordingly.

4.2.2.3 Reactor Vessel Support Structure

The reactor vessel is supported on six individual air-cooled support pads. The support pads are hollow box-type built-up plate structures equipped with ten ¼-inch plate split steel cooling fins welded to the inside walls. Approximate outside dimensions of the pad structures are 15-inches wide x 18-inches high x 58-inches long. The boxes are welded to the top cap plates of six full-length support columns that are embedded in the concrete shield structure. The box structures support the reactor vessel shoes supplied with the vessel. Attachment to the shoes is by means of bolting as described in Section 5.9.

The support pads provide for the vertical and lateral support of the reactor vessel. In addition, the pads provide a means to obtain a suitable temperature gradient between the reactor vessel support points and the supporting concrete and steel structures of the building.

The pads are cooled by an interconnecting forced air duct system embedded in the concrete shield structure.

The pads are structurally designed for:

- Reactor vessel vertical loads
- Radial temperature expansion friction forces of the reactor vessel
- Lateral seismic and pipe rupture loads
- Temperature stresses caused by temperature gradients within the support pads

The pad structure was analyzed as a closed box type structure using STRUDL computer codes.

The main purpose of pad cooling is to maintain a satisfactory temperature profile along the support coordinate, rather than heat removal from the support system. The optimum operating conditions are such that the temperature at the bottom plate of the rectangular ventilated pad is kept sufficiently low so that heat transferred from the pads into the surrounding concrete becomes negligible. Based on a design temperature of 650°F for the reactor vessel, the design criteria of thermal gradients across the support system are as follows:

1. The minimum temperature at the integral nozzle interface is 300°F, equivalent to a maximum permissible temperature drop of 350°F in the nozzle.

2. The temperature drop across the sidewalls of the rectangular finned pad must not exceed 150°F.
3. The temperature at the bottom plate of the rectangular pad is 150°F or lower.

Appropriate thermocouples are installed to confirm that criteria (2) and (3) are satisfied.

With an air flow rate of 1500 cfm per support at 120°F available for the pad-cooling, a rectangular finned pad as shown in Figure 4.2-3 was designed to satisfy all the criteria mentioned above.

The calculation results based on the dimensions given in Figure 4.2-3 are summarized in Table 4.2-3 and expressed in Figure 4.2-4.

The predicted heat removal rate of 5580 Btu/hr from each wall of the rectangular pad implies an effective nozzle heat transfer area of approximately 4 ft^2 which is believed to be acceptable by investigating the nozzle configuration and the nozzle interface area. The study also indicated that the effective nozzle area for heat transfer is not so sensitive as to change the temperature profile significantly for the designed ventilated pad. It is therefore concluded that the pad-cooling design is adequate.

4.2.2.4 Pressurizer

The general arrangement of the pressurizer is shown in Figure 4.2-5, and the design data are listed in Table 4.1-3.

The pressurizer maintains the required reactor coolant pressure during steady-state operation, limits the pressure changes caused by coolant thermal expansion and contraction during normal load transients, and prevents the pressure in the RCS from exceeding the design pressure.

The pressurizer vessel contains replaceable direct immersion heaters, multiple safety and relief valves, a spray nozzle and interconnecting piping, valves and instrumentation. Block valves, provided with an emergency power supply, are located upstream of the pressurizer power operated relief valves (PORV) to prevent a LOCA through an unseated relief valve. Air accumulators are installed in line with the PORV air supply affording several operations of the PORVs upon loss of instrument air. Additionally, there is a ¾" vent line upstream of the block valves capable of being remotely operated. The electric heaters located in the lower section of the vessel assist in pressurizing and maintaining the pressure of the RCS by keeping the water and steam in the pressurizer at system saturation temperature. The heaters are capable of raising the temperature of the pressurizer and contents at approximately 55°F/hr during startup of the reactor.

The pressurizer is designed to accommodate positive and negative surges caused by load transients. The surge line, which is attached to the bottom of the pressurizer, connects the pressurizer to the hot leg of a reactor coolant loop. During a positive surge, caused by a decrease

in plant load, the spray system, which is fed from the cold leg of a coolant loop, condenses steam in the pressurizer vessel to prevent the pressurizer pressure from reaching the set point of the power operated relief valves. Power operated spray valves on the pressurizer spray line limit the pressure during load transients. In addition the spray valves can be operated manually from the control room. A small continuous spray flow is provided to assure that the pressurizer liquid is homogeneous with the coolant and to prevent excess cooling of the spray piping.

During a negative pressure surge, caused by an increase in plant load, flashing of water to steam and generation of steam by automatic actuation of the heaters keep the pressure above the minimum allowable limit. Heaters are also energized on high water level during positive surges to heat the subcooled surge water entering the pressurizer from the reactor coolant loop.

The pressurizer is constructed primarily of low alloy steel with internal surfaces clad with austenitic stainless steel. The heaters are sheathed in austenitic stainless steel.

A pressurizer vessel surge nozzle is protected from thermal shock by a thermal sleeve. A thermal sleeve also protects the pressurizer spray nozzle connection.

4.2.2.5 Pressurizer Support Structure

The pressurizer is supported on a heavy concrete slab spanning the concrete shield walls of its compartment. The pressurizer is a bottom-skirt-supported vessel.

4.2.2.6 Steam Generators

Each loop contains a vertical shell and U-tube steam generator. The steam generator lower assemblies are replacement units installed in 2001. The replacement lower assemblies have been designed to retain the major design functions, thermal performance and overall physical size of the original steam generators, thus limiting the impact of the replacement steam generators on the Kewaunee design and licensing basis. The joint between the replacement lower assembly and the original upper shell is midway in the transition cone. The steam generator is shown in Figure 4.2-6. Principal design parameters are listed in Table 4.1-4.

Reactor coolant enters the inlet side of the channel head at the bottom of the steam generator through the inlet nozzle, flows through the U-tubes to an outlet channel and leaves the generator through another bottom nozzle.

The inlet and outlet channels are separated by a partition. Manways are provided to permit access to the U-tubes and moisture separating equipment.

Feedwater to the steam generator enters just above the top of the U-tubes through a feedwater ring. The water flows downward through an annulus between the tube wrapper and the shell and then upward through the tube bundle where part of it is converted to steam.

The steam-water mixture from the tube bundle passes through a steam swirl vane assembly, which imparts a centrifugal motion to the mixture and separates the water droplets from the steam. The water spills over the edge of the swirl vane housing and combines with the feedwater for another pass through the tube bundle.

The steam rises through additional separators, which limit the moisture content of the steam to one fourth of one percent or less under all design load conditions.

The primary side inlet and outlet nozzle of each steam generator include provisions to accept two nozzle dams each, which allow isolation of the steam generator primary side during refueling operations. In each nozzle a ring is seal welded to the steam generator nozzle cladding. This ring provides a location to attach the nozzle dam.

The steam generator nozzles with rings, have been analyzed for structural integrity and seal welds installed and found acceptable (Reference 6).

The steam generator is constructed primarily of low alloy steel. The tubes are fabricated of nickel-chromium-iron Alloy 690. The tubes undergo thermal treatment following tube-forming operations. The interior surfaces of the channel heads and nozzles are clad with austenitic stainless steel, and the side of the tube sheet in contact with the reactor coolant is clad with Inconel. The tube to tubesheet joint is welded.

4.2.2.6.1 Steam Generator Support Structure

The steam generator is supported on a structural system consisting of four vertical columns fitted at the top and bottom with a double clevis and pin assembly. The vertical column clevis base plates are bolted to the steam generator support feet and permit movement in the horizontal plane to accommodate reactor coolant pipe thermal expansion. Horizontal restraint is accomplished at two locations: the lower lateral support located at the support feet and the upper lateral support located near the center of gravity, below the transition cone. The upper and lower supports include mechanical stops and a hydraulic shock suppressor. These supports limit and control horizontal movement for pipe rupture and seismic effects. The steam generator support structures are further described in Chapter 5.

4.2.2.7 Reactor Coolant Pumps

Each reactor coolant loop contains a vertical single-stage centrifugal pump, which employs a controlled-leakage seal assembly. A view of a controlled-leakage pump is shown in Figure 4.2-7 and the principal design parameters for the pumps are listed in Table 4.1-5. The reactor coolant pump estimated performance and net positive suction head (NPSH) characteristics are shown in Figure 4.2-8. The performance characteristic is common to all of the higher specific speed centrifugal pumps and the “knee” at about 45 percent design flow introduces no operational restrictions since the pumps operate at full flow.

All the pressure-bearing parts of the reactor coolant pump are analyzed in accordance with Article 4 of the ASME B&PV Code, Section III. This includes the casing, the main flange and the main flange bolts. The analysis includes pressure, thermal and cyclic stresses and these are compared with the allowable stresses in the Code.

Mathematical models of the parts are prepared and used in the analysis, which proceeds in two phases.

In the first phase, the design is checked against the design criteria of the ASME Code, with stress calculations using the allowable stress at design temperature. By this procedure, the shells are profiled to attain optimum metal distribution with stress levels adequate to meet the more exacting requirements of the second phase.

In the second phase, the interacting forces needed to maintain geometric capability between the various components are determined and applied to the components along with the external load, to determine the final stress state of the components. This stress was also used in the fatigue analyses. These results were finally compared with the Code allowable values.

There are no other sections of the Code which are specified as areas of compliance, but where Code methods, allowable stresses, fabrication methods, etc., are applicable to a particular component, these are used to give a rigorous analysis and conservative design.

Stress Analysis Reports are prepared on these components as described in Section 4.3.3. These reports include the calculation of stress intensities and a summary of fatigue usage factors. These reports are a part of the plant documentation on file with the Dominion Energy Kewaunee, Inc.

Reactor Coolant is pumped by the impeller attached to the bottom of the rotor shaft. The coolant is drawn up through the impeller, discharged through passages in the diffuser, and out through a discharge nozzle in the side of the casing. The rotor-impeller can be removed from the casing for maintenance or inspection without removing the casing from the piping. All parts of the pumps in contact with the reactor coolant are austenitic stainless steel or equivalent corrosion-resistant materials.

The pump employs a controlled-leakage seal assembly to restrict leakage along the pump shaft, as well as a secondary seal which directs the controlled leakage out of the pump, and a third seal which minimizes the leakage of water and vapor from the pump into the containment atmosphere.

A portion of the high-pressure water flow from the charging pumps is injected into the reactor coolant pump between the impeller and the controlled-leakage seal. Part of the flow enters the Reactor Coolant System through a labyrinth seal in the lower pump shaft to serve as a buffer to keep reactor coolant from entering the upper portion of the pump. The remainder of the injection

water flows along the drive shaft, through the controlled-leakage seal, and finally out of the pump. A very small amount, which leaks through the secondary seal is also collected and removed from the pump.

Component cooling water is supplied to the thermal barrier heat exchanger and the motor bearing oil coolers.

The squirrel cage induction motor driving the pump is air-cooled and has oil lubricated thrust and radial bearings. A water-lubricated bearing provides radial support for the pump shaft.

An extensive test program has been conducted for several years to develop the controlled-leakage shaft seal for pressurized water reactor applications. Long-term tests have been conducted on less-than-full-scale prototype seals as well as full size seals. San Onofre and Connecticut Yankee and others have demonstrated satisfactory performance of the controlled-leakage shaft seal pump.

Each Reactor Coolant Pump has a vibration monitoring system with remote readout and analytical capabilities in the control room. This equipment provides continuous surveillance of Reactor Coolant Pump conditions and immediate indication of trouble to control room personnel. This system also provides a remote means of checking the balance of the pumps.

The reactor coolant pumps run at about 1200 rpm and may operate briefly at overspeeds of 109 percent during loss of outside load. For conservatism the motors are designed in accordance with NEMA standards for operation at a maximum speed of 125 percent of rated speed.

Precautionary measures, taken to preclude missile formation from the reactor coolant pump components, assure that the pumps will not produce missiles under any anticipated accident condition.

Each component of the reactor coolant pump motors has been analyzed for missile generation. Any fragments would be contained by the heavy stator. The same conclusion applies to the pump impeller because the small fragments that might be ejected would be contained by the heavy casing.

The reactor coolant pump flywheels are shown in Figure 4.2-9. As for the pump motors, the most adverse operating condition of the flywheels is visualized to be the loss-of-load situation. The following conservative design-operation conditions preclude missile production by the pump flywheels. The wheels are fabricated from rolled, vacuum-degassed, ASTM A-533 Grade B Class 1 steel plates. Flywheel blanks are flame-cut from the plate, with allowance for exclusion of flame-affected metal. A minimum of three Charpy tests are made from each plate parallel (RW, longitudinal) and normal (WR, transverse) to the rolling direction. An NDT less than +10°F is specified. Westinghouse has a great deal of experience and data in determining fracture toughness of A-533 Grade B Class 1 steel utilizing fracture mechanics specimens as well as Charpy-V

specimens. Fracture mechanics specimens up to 12 inches in thickness have been tested to characterize A-533 Grade B Class 1 material.

From Westinghouse's experience and those of others found in the literature, an empirical relationship can be established from Charpy-V data and fracture toughness data ($^{K}I_{C}$). The finished flywheels are subjected to 100 percent volumetric ultrasonic inspection. The finished machine bores are also subjected to magnetic particle or liquid penetrant examination.

These design-fabrication techniques yield flywheels with primary stress at operating speed (shown in Figure 4.2-10) less than 50 percent of the minimum specified material yield strength at room temperature (100 to 150°F). The stress resulting from the press fit of the flywheel on the shaft is less than 2000 psi at zero speed, but this stress becomes zero at approximately 600 rpm because of radial expansion of the hub. Bursting speed of the flywheels has been calculated on the basis of Griffith-Irwin's results (Reference 2 and Reference 3), to be 3900 rpm, more than three times the operating speed.

A fracture mechanics evaluation was made of the reactor coolant pump flywheel. This evaluation considered the following assumptions:

1. Maximum tangential stress at an assumed overspeed of 125 percent
2. A crack through the thickness of the flywheel at the bore
3. 400 cycles of startup operation in forty years

Using critical stress intensity factors and crack growth data attained on flywheel material, the critical crack size for failure was greater than 17 inches radially and the crack growth rate was 0.030 inch to 0.060 inch per 1000 cycles.

An ultrasonic inspection capable of detecting at least ½ inch deep cracks from the ends of the flywheel will be more than adequate as part of a plant surveillance program.

4.2.2.8 Pump Support Structure

The reactor coolant pump is supported by a structural system consisting of three vertical columns fitted at the top and bottom with a double clevis and pin assembly and a system of stops. The vertical column clevis base plates are bolted to the pump support feet and permit movement in the horizontal plane to accommodate reactor coolant pipe thermal expansion. Horizontal restraint is accomplished by a combination of tie rods and stops, which limit horizontal movement for pipe rupture and seismic effects. The reactor coolant pump support structures are further described in Chapter 5.

4.2.2.9 Pressurizer Relief Tank

Principal design parameters of the pressurizer relief tank are given in Table 4.1-3.

Steam discharged from the power relief and safety valves passes to the pressurizer relief tank, which is partially filled with water at or near ambient containment conditions. The tank normally contains water in a predominantly nitrogen atmosphere. Steam is discharged under the water level to condense and cool by mixing with the water. The tank is equipped with a spray and drain, which are operated to cool the tank following a discharge.

The tank size is based on the requirement to condense and cool a discharge from the pressurizer equivalent to 110 percent of the steam in the pressurizer at full power.

The tank is protected against a discharge exceeding the design value by a rupture disc, which discharges into the reactor containment. The rupture disc on the relief tank has a relief capacity at least equal to the combined capacity of the pressurizer safety valves. The tank design pressure (and the rupture disc setting) is twice the calculated pressure resulting from the maximum safety valve discharge described above. This margin is to prevent deformation of the disc. The tank and rupture disc holder are also designed for full vacuum to prevent tank collapse if the tank contents cool without nitrogen being added.

The pressurizer relief tank, by means of its connection to the Waste Disposal System, provides a means for removing any non-condensable gases from the RCS, which might collect in the pressurizer vessel.

The tank is constructed of carbon steel and lined with a corrosion resistant coating.

4.2.2.10 Piping

The general arrangement of the RCS piping is shown on the plant layout drawings in Chapter 1. Piping design data are presented in Table 4.1-6.

The reactor coolant piping layout is designed on the basis of providing “floating” supports for the steam generator and Reactor Coolant Pump in order to absorb the thermal expansion from the fixed or anchored reactor vessel.

The austenitic stainless steel reactor coolant piping and fittings which make up the loops are 29 inch ID in the hot legs, 27 ½ inch ID in the cold legs and 31 inch ID between each loop’s steam generator outlet and its reactor coolant pump suction.

The pressurizer safety valve discharge piping is equipped with 2 rupture discs designed to rupture under the pressure forces associated with an accelerating water slug originating at the pressurizer safety valve loop seal. The accelerating water slug, and subsequent steam, discharge directly into the pressurizer vault against baffle plates, which absorb the shock and diffuse the water/steam jet.

The 2-rupture disc design is intended to correspond one rupture disc to one safety valve, considering piping bends and proximity. This design does not exclude both discs from rupturing when one safety valve actuates at its nominal setpoint.

There is an orifice in the pressurizer discharge piping between the PORV discharge piping connection and rupture discs to reduce the pressure at the rupture discs associated with PORVs opening at their nominal setpoints. With the orifice in place, the rupture discs will withstand the maximum pressure associated with opening one or both PORVs at their nominal setpoints.

Pressurizer safety valve leakage and all discharge from the PORVs are routed to the pressurizer relief tank.

The pressurizer relief line, which connects the pressurizer safety and relief valves to the inlet nozzle on the pressurizer relief tank, is fabricated of stainless steel. Other small piping, including the pressurizer surge spray lines, drains and connections to other systems are austenitic stainless steel. All joints and connections are welded except for flange connections to the carbon steel pressurizer relief tank and the connections at the relief and safety valves.

Thermal sleeves are installed at the following locations where high thermal stresses could otherwise develop due to rapid changes in fluid temperature during normal operational transients:

- Return line from the Residual Heat Removal System
- Both ends of the pressurizer surge line
- Pressurizer spray line connection to the pressurizer
- Charging line connections

4.2.2.11 Pipe Rupture Restraints

In the confirmatory dynamic analyses, longitudinal rupture and circumferential ruptures were postulated in the RCS at points of change in flexibility.

Pipe rupture restraints were located such that plastic hinges were prevented, unless formation of the plastic hinge did not result in pipe whip which would impair containment integrity or a safety system function. The pipe rupture restraints are designed with an allowable stress less than 0.9 times the yield strength of the restraint material. All restraints remain in place, though the more significant dynamic effects of postulated breaks in the reactor coolant loop have been eliminated (see Section 5.9.2, Design Bases).

All piping systems were routed, barriers installed, or the piping otherwise restrained such that all vital equipment is shielded from potential damage due to pipe whip caused by jet reaction loads.

Individual lines and components of all Engineered Safety Features are separated to the maximum extent practicable and restrained where necessary to prevent interaction with redundant lines and components, as well as with other systems.

The pipe rupture analyses of lines with diameter of 3/4 inches or less were performed in the same manner as those of larger diameter.

Pipe rupture analyses were performed on all high-pressure piping except reactor coolant loop piping. For the design of the NSSS piping, equipment, and supports, ruptures at large reactor coolant loop branch nozzles were analyzed. The analyses establish that the containment vessel and all essential equipment within and without the containment (system and equipment defined as Class I in Appendix B) are adequately protected against the effects of potential pipe ruptures.

- Method of Analysis:

  Pipe ruptures were postulated in the portions of piping systems pressurized during normal plant operations, the resulting forces were determined in accordance with the criteria as specified below, and potential damage to the system under consideration and to other Class I systems and equipment was evaluated.

  a. Ruptures were postulated in adjacent Class I, II and III high-pressure piping and potential damage to Class I systems or equipment under consideration was evaluated.

  b. Potential damage to Class I Systems and Equipment, including the containment vessel, resulting from pipe rupture was evaluated to assure that their minimum required performance is not reduced below that specified in the USAR. As part of the evaluation it is assumed that the failure of any single active component could occur coincident with the assumed pipe rupture.

  Pipe rupture constitutes potential sources of damage as a result of:

  a. Jet impingement - the force loading of the jet issuing from the break.

  b. Pipe whip - the unrestrained movement of a length of pipe caused by the reaction loading at point of break.

The evaluation of damage propagation from these forces was based upon piping configuration, location of barriers and supports, locations of postulated breaks, separation of redundant parts of the system, and location of other systems and equipment in relation to the system under consideration. Locations of breaks were assumed such that the most critical results would occur.

- Rupture Forces:

  The initial force at the point of rupture is:

  F = 1.2 PA

  where:

  P = static pressure at point of rupture

  A = flow area of the pipe

For breaks in compressible fluid systems and in liquid systems connected to reservoirs that are large relative to the pipe size, the pressure is the maximum normal operation pressure at the point of rupture. For breaks in liquid systems not connected directly to reservoirs, the pressure is based on the saturation pressure at the maximum normal operating temperature.

- Break Size:

  The area of any postulated rupture is assumed equal to the flow area of the ruptured pipe. A longitudinal break is assumed to be rectangular in shape with length equal to two times the inside diameter of the ruptured pipe.

- Jet Impingement Load:

  The jet impingement load is defined as the load on a component (piping or equipment) of the undeflected jet from an instantaneous circumferential or longitudinal break of an adjacent pipe.

  At the point of rupture, the jet pressure is assumed equal to the rupture pressure (P), and the effective loading area is assumed to be the break area (A). As the flow progresses away from the point of rupture the jet is assumed to diverge at an included angle of 45°. Hence, the effective loading area at some distance from the point of a longitudinal break is:

  $$A_i = [L_1 + 2L_3 Tan22 - ½°]L_2 + 2L_3 Tan22 - ½°$$

  where:

  L_1 = width of break

  L_2 = length of break

  L_3 = distance to target

  and the jet pressure at some distant target object with the effective load area is

$$P_i = P\left[\frac{A}{A_i}\right]$$

The effective load on a distant target is

$$F_e = f\,P_i A_e$$

where:

A_e = projected area of the target object

f = shape factor of the target object

- Criteria For Pipe Whip:

The evaluation of the effects of pipe whip is based upon a review of the physical arrangement of the piping system under consideration in conjunction with the evaluation of the ultimate load carrying capability of the piping. At any point in the pipe where the load resulting from a rupture exceeds the ultimate load carrying capability, it is assumed that a plastic hinge is formed and that the pipe will rotate freely about this point unless restrained at another point.

The load carrying capability of a pipe is defined in terms of the ultimate bending strength, which for carbon steel piping is

$$M_{ult} = (1.33)(r_1^{\,3} r_2^{\,3})\sigma$$

where:

r_1 = Outside radius

r_2 = Inside radius

$\sigma = (0.75)\ \sigma$

σ_{ult} = Ultimate strength of pipe at maximum normal operating temperature.

For stainless steel pipe, the ultimate bending moment can vary within a range defined by the lower and upper limits of:

M_{ult} (lower limit) = $2.4\ \sigma_y\ Z$

M_{ult} (upper limit) = $3.8\ \sigma_y\ Z$

where:

σ_y = yield strength of the pipe at maximum normal operating temperature

Z = section modulus of the pipe

A derivation of M_{ult} is given in Reference 5.

For conservatism, the lower limit value is used to determine the location of a plastic hinge in stainless steel piping.

If either of the two following conditions are found to exist, it is assumed that pipe whip would result:

a. A circumferential break such that a section of pipe is subjected to a cantilever type loading in a manner which produces a bending moment greater than M_{ult}

b. A longitudinal break resulting in bending moments greater than M_{ult} at the point of break and at the restraint points on either side of the break

A whipping section of pipe is assumed to move freely until striking an object capable of stopping it and no recurring plastic hinges are assumed to develop. Further, it is assumed that the pipe will neither rebound nor change directions.

It is assumed that a whipping pipe will not damage another pipe of equal or greater size and schedule.

- Restraint/Anchor Loading:

Determination of the maximum loads on pipe rupture restraints and anchors is based upon the following assumptions:

a. Pipe rupture loads are “point” loads.

b. Restraints/anchors act as “fixed” supports.

c. A plastic hinge is not formed in stainless steel until the upper limit value of the ultimate load carrying capability is exceeded.

d. Loads can originate from either a pipe rupture force in the piping system under consideration or a jet impingement force resulting from a break in adjacent Class I, II or III piping.

4.2.2.12 Valves

All valve surfaces in contact with reactor coolant are austenitic stainless steel or equivalent corrosion-resistant materials. Connections to stainless steel piping are welded.

Valves that perform a modulating function are equipped with two sets of packing and an intermediate leakoff connection.

4.2.3 Pressure-Relieving Devices

The Reactor Coolant System is protected against overpressure by control and protective circuits such as the high-pressure trip and by code relief valves connected to the top head of the pressurizer. The relief valves discharge into the pressurizer relief tank, which condenses and collects the valve effluent. The schematic arrangement of the relief devices is shown in Figure 4.2-1, and the valve design parameters are given in Table 4.1-3. Valve sizes are determined as indicated in Section 4.3.4.

Power-Operated Relief Valves and code safety valves are provided to protect against pressure surges, which are beyond the pressure limiting capacity of the pressurizer spray.

The design and installation criteria for the mounting of the pressure-relieving devices within the reactor coolant pressure boundary and on the main steam lines outside of containment is in accordance with Westinghouse criteria and the applicable portions of the following codes:

- ASME Section I Power Boilers
- ANSI B31.1.0 Power Piping Code
- ASME Section III Nuclear Power Plant Components

In designing the proper support systems for the pressure-relieving devices, a complete thermal, dead weight and dynamic analysis was performed and the stresses are within the code allowable values as set forth in Appendix B. Calculations to determine the discharge forces assumed that all of those pressure-relieving devices which are connected to the same header (or have any significant influence by discharging simultaneously) would discharge concurrently at their maximum relieving capacity. The full discharge loads and all resulting forces, bending moments and torsional moments imposed on the connecting piping were analyzed. The resulting stress levels were maintained below the code allowable values by reinforcing and restraining the pipe as required.

In response to the requirements of NUREG-737, Item II.D.1, programs were developed and executed to re-examine the functional performance capabilities of safety, relief and block valves to verify the integrity of the piping systems for normal, transient and accident conditions. These programs were deemed necessary by the NRC to reconfirm that General Design Criteria 14, 15 and 30 of Appendix A to 10 CFR 50 are satisfied.

These programs and the test results were approved by the NRC and adequately ensure that the reactor primary coolant pressure boundary will have a low probability of abnormal leakage and that it and its components (piping, valves and supports) have been designed with a sufficient margin so that design conditions are not exceeded during relief/safety valve events. In addition, the tests and successful performance of the valves and associated components demonstrated that

this equipment is constructed with appropriately high quality standards (see NRC SER in Reference 8).

The PORV block valves have been replaced with a double disc gate valve, with explicit design features that address the concerns associated with thermal binding, pressure locking, stem embrittlement and stem growth phenomena.

The pressurizer relief tank is protected against a steam discharge exceeding the design pressure value by a rupture disc, which discharges into the reactor containment. The rupture disc relief conditions are given in Table 4.1-3.

4.2.4 Protection Against Proliferation of Dynamic Effects

Engineered Safety Features and associated systems are protected from loss of function due to dynamic effects and missiles, which might result from a LOCA. Protection is provided by missile shielding and/or separation of redundant components. This is discussed in detail in Chapter 6.

The RCS is surrounded by concrete shield walls. These walls provide shielding to permit access into the containment during full power operation for inspection and maintenance of miscellaneous equipment. These shielding walls also provide missile protection for the Reactor Containment Vessel.

The concrete deck over the RCS also provides for shielding and missile damage protection. Missile protection afforded by the arrangement of the RCS is illustrated in the Containment System drawings given in Chapter 5.

4.2.5 Materials of Construction

Each of the materials used in the RCS is selected for the expected environment and service conditions. The major component materials are listed in Table 4.2-1.

All RCS materials, which are exposed to the coolant are corrosion-resistant. They consist of stainless steels and Inconel, and they are chosen for specific purposes at various locations within the system for their superior compatibility with the reactor coolant. The chemical composition of the reactor coolant is maintained within the specification given in Table 4.2-2. Reactor coolant chemistry is further discussed in Section 4.2.7.

The water chemistry specifications in the secondary side of the steam generators are maintained consistent with the EPRI PWR Secondary Water Chemistry Guidelines to control deposits and corrosion inside the steam generator.

The phenomena of stress-corrosion cracking and corrosion fatigue are not encountered unless a specific combination of conditions is present. The necessary conditions are a susceptible alloy, an aggressive environment, a stress, and time.

To avoid partial or local severe sensitization of austenitic stainless steel, the following steps were taken.

4.2.5.1 Reactor Vessel

The safe ends on the primary nozzles were made of weld metal containing enough ferrite to prevent severe sensitization.

The original, sensitized Safety Injection nozzle safe end was removed and a new weld-end prepared in the Inconel weld metal deposit that affixed the original safe end.

4.2.5.2 Steam Generator

The primary nozzle safe ends are forged stainless steel pieces that permit welding to the primary piping without post weld heat treatment of the installation weld.

4.2.5.3 Pressurizer

The type 316L safe ends were welded on after weld heat treatment.

4.2.5.4 Core Structure

All core structural load bearing members were made from annealed type 304 stainless steel, so there is no possibility of sensitization, with the exception of the core barrel itself, which required stress relief during manufacture at temperatures over 750°F. The stress relieving operation was conducted in a manner to minimize the possibility of severe sensitization, while maintaining the necessary conditions for relieving residual fabrication stresses. This consisted of heating to 1650°F, holding at this temperature for several hours, then cooling very slowly in the furnace. This treatment results in massive carbide precipitation at the grain boundaries, and agglomeration of the carbides, instead of the formation of detrimental continuous carbide films. Further, the long times at high temperatures cause diffusion of chromium into the grain boundary areas that were depleted in chromium by the precipitation of chromium carbides. This combination of formation of massive carbides, plus diffusion of chromium back into the depleted zone is referred to as “desensitization,” and is commonly used to prevent severe sensitization of parts requiring heat treatments that otherwise would cause severe sensitization of the material. Strauss tests, run according to ASTM A393, were performed on core barrel material given this heat treatment, and results verified that severe sensitization is prevented.

All reactor coolant pipe and fittings were water-quenched from the solution heat treatment and then water-cooled (on the inside) during welding. The resultant ferrite content is approximately 8 percent. Although there were no spot checks with HNO3 or Strauss tests, there is no question that for the Kewaunee piping and fittings the water quenching was fast enough to preclude sensitization. As shown from past experience with heavier sections, the ferrite content runs from 5 to 15 percent and the interpass temperature is very low (approximately 350°F maximum) due to the inside water-cooling. Since water quench was not practical for field

welding, interpass temperature was maintained below 350°F by limiting heat input through the use of small diameter weld wire. Temperatures were measured by temperature indicating crayons or contact thermometers to assure this limitation was met. Weld wire was procured with a minimum of 5 percent ferrite specified, as deposited. To assure this requirement was met, samples were taken from each heat, a pad made and analyzed with a Severin gauge.

It is characteristic of stress corrosion that combinations of alloy and environment which result in cracking are usually quite specific. Nitrogen was not added to type 304 or 316 stainless steel, so this is not a consideration. Environments, which have been shown to cause stress-corrosion cracking of stainless steels are free alkalinity in the presence of a concentrating mechanism and the presence of chlorides, fluorides, and free oxygen. With regard to the former, experience has shown that deposition of chemicals on the surface of tubes can occur in a steam-blanketed area within a steam generator. In the presence of this environment under very specific conditions, stress-corrosion cracking can occur in stainless steels having the nominal residual stresses resulting from normal manufacturing procedures.

The replacement steam generator tubes are fabricated of nickel-chromium-iron Alloy 690. The tubes undergo thermal treatment following tube-forming operations. The thermal treatment subjects the tubes to elevated temperatures for a prescribed period of time to improve the grain structure of the material. Thermally treated Alloy 690 has been shown in laboratory test and operating nuclear power plants to be very resistant to primary water stress corrosion cracking (PWSCC) and outside diameter stress corrosion cracking (ODSCC). The tubes in rows 1 through 8 are also stress relieved following bending of the U-bend to decrease the potential for stress corrosion cracking.

Thermally treated (TT) nickel-chromium-iron Alloy 690 used for the replacement steam generator tubes is very resistant to corrosion in steam generator applications. Alloy 690 TT has been proven through both laboratory testing and operational experience to provide increased corrosion resistance compared to mill annealed Alloy 600 (original steam generator tubes) with regard to PWSCC and ODSCC. Alloy 690 has been determined to be the material of choice for steam generator application based on extensive industry testing. Field experience with Alloy 690 tubing in operation since 1989 has been excellent.

Laboratory testing shows that Alloy 690 tubing is compatible with the all-volatile treatment environment. Isothermal corrosion testing in high-purity water shows that Alloy 690 exhibiting normal microstructure tested at normal engineering stress levels is not susceptible to intergranular stress corrosion cracking in extended exposure to high-temperature water. These tests also show that no general type corrosion occurred.

Several features in the replacement steam generator minimize crevice areas and the deposition of contaminants from the secondary-side flow. Such crevices and deposits could

otherwise produce a local environment allowing adverse conditions to develop and result in material corrosion.

All external insulation of RCS components is compatible with component materials. The cylindrical shell exterior and closure flanges to the reactor vessel are insulated with metallic reflective insulation. The reactor vessel closure head and steam generators are also insulated with metallic reflective insulation. All other external corrosion-resistant surfaces in the RCS are insulated with low or halide-free insulating material as required.

The NDT temperature of the reactor vessel material opposite the core is periodically established by performing Charpy V-notch tests at 30 ft lb or greater on the reactor vessel test specimens. The material is tested to verify conformity to specified requirements and to determine the actual NDT temperature value. In addition, this material is 100 percent volumetrically inspected by ultrasonic test using both straight beam and angle beam methods.

The remaining material in the reactor vessel, and other Reactor Coolant System components, meets the appropriate design code requirements and specific component function.

The reactor vessel material is heat-treated specifically to obtain good notch-ductility, which ensures a low NDT temperature and thereby gives assurance that the finished vessel can be initially hydrostatically tested and operated as near to room temperature as possible without restrictions. The stress limits established for the reactor vessel are dependent upon the temperatures at which the stresses are applied. As a result of fast neutron irradiation in the region of the core, the material properties will change, including an increase in the NDT temperature. A nominal initial maximum value of NDT temperature will be established after examination and evaluation of the fabrication specimens.

The techniques originally used to measure and predict the integrated fast neutron (E > 1 Mev) fluxes at the sample locations and the initial NDT temperature of the reactor vessel base plate and forgings material are described in Appendix 4A of the original FSAR. The calculation method used to obtain the maximum neutron (E > 1 Mev) exposure of the reactor vessel is identical to that described for the irradiation samples. Since the neutron spectrum at the sample can be applied with confidence to the adjacent section of the reactor vessel, the vessel exposure will be obtained from the measured sample exposure by appropriate application of the calculated azimuthal neutron flux variation.

The maximum original integrated fast neutron (E > 1 Mev) exposure of the vessel was computed to be 4.4E+19 n/cm² for forty years operation at 1650 MWt at 85 percent load factor. Subsequent to the original calculation, the pressure vessel fast neutron fluence was updated by Reference 1, Reference 2, Reference 3, Reference 4, Reference 8, Reference 12 and Reference 16 of Section 4.4. The conservatively estimated maximum fast neutron exposure of the vessel for all 34 effective full power years is 3.49E+19 n/cm². The methodology and numerical estimates used

to calculate the fast neutron fluence were reviewed by the NRC and found acceptable (see NRC SER in Reference 4 of Section 4.1).

To evaluate the NDT temperature shift of welds, heat affected zones and base material for the vessel, test coupons of these material types have been included in the reactor vessel surveillance program described in Technical Specifications Section 3.1.b and USAR Section 4.4.1.

The methods used to measure the initial NDT temperature of the reactor vessel base plate material are given in Appendix 4A of the original FSAR.

4.2.6 Maximum Heating and Cooling Rates

The reactor system operating cycles used for design purposes are given in Table 4.1-8 and described in Section 4.1.5. The typical system heating and cooling rate varies between 30°F/hr and 50°F/hr. However, under some plant conditions these rates may be exceeded. Sufficient electrical heaters are installed in the pressurizer to permit a heatup rate of 55°F/hr, starting with a minimum water level. This rate takes into account the small continuous spray flow provided to maintain the pressurizer liquid homogeneous with the coolant.

The fastest cooldown rates, which result from the hypothetical case of a break of a main steam line are discussed in Chapter 14.

NRC approval of Technical Specification Amendment No. 168 (Reference 7) revised the value for the applicability period for reactor heatup and cooldown pressure/temperature limits from 28 to 31.1. EFPY. The basis for these changes is two-fold:

- A Master Curve - based approach (Reference 12) was applied for establishing EOL reference transition temperatures (although the heatup/cooldown curves themselves are not based upon Master Curve data).
- A change to reflect the vessel fluence associated with uprated power operation.

4.2.7 Water Chemistry

The water chemistry is selected to provide the necessary boron content for reactivity control and to minimize corrosion of RCS surfaces.

All materials exposed to reactor coolant are corrosion resistant. Periodic analyses of the coolant chemical composition are performed to monitor the adherence of the system to the reactor coolant water quality listed in Table 4.2-2. Maintenance of the water quality to minimize corrosion is accomplished using the Chemical and Volume Control System and Sampling System, which are described in Chapter 9.

4.2.8 Reactor Coolant Flow Measurements

Elbow taps are used in the RCS as an instrument device that indicates the status of the reactor coolant flow. The basic function of this device is to provide information as to whether or not a reduction in flow rate has occurred. The correlation between flow reduction and elbow tap read out has been well established by the following equation:

$$(4)\Delta P/\Delta P_o = (\omega/\omega_o)^2$$

where:

ΔP_o = is the pressure differential with the corresponding flow rate

ΔP = is the pressure differential with the corresponding referenced flow rate

The full flow reference point is established during initial plant startup. The low flow trip point is then established by extrapolating along the correlation curve. The technique has been well established in providing core protection against low coolant flow in Westinghouse PWR plants. The expected absolute accuracy of the channel is within ±10 percent and field results have shown the repeatability of the trip point to be within ±1 percent. As a result of the calibration techniques used, the absolute accuracy of the coolant flow measurement is not relevant. The limiting trip point assumed for analysis was 87 percent loop flow. This represents a 3 percent of flow allowance below the setpoint of ≥ 90 percent, which is specified in the Technical Specifications, Section 2.3. Since the trip point is calibrated as a function of full flow output of the instrument and since the flow rate of the reactor is verified to be equal or greater than the design flow rate during startup testing, the actual trip point would ≥89 percent based on the ±1 percent repeatability.

Startup tests provide a means for verifying that reactor coolant flow is equal to or greater than the design flow rate. The core flow rate can be verified, with accuracy better than 10 percent, by correlating a secondary system heat balance and the inlet and outlet core temperatures. In addition, measurements of pump input power and loop DP can be made at hot shutdown condition for various configurations of running pumps (“A” pump running, “B” pump running, and both pumps running), the absolute flow rate of each pump is verified to be greater than the design flow.

4.2.9 Reactor Coolant System Temperature

RTDs are located in bypass loops for each hot and cold leg to develop signals used as part of the reactor control and protection systems. In addition to the bypass loop RTDs, one well type is located in each hot and cold leg to provide loop temperature signals independent of the bypass loops.

To obtain a representative hot-leg temperature, three connections are located 120° apart on the same cross-sectional plane of the RCS piping and extend into the Reactor Coolant System

pipe. The hot-leg RTD bypass flow from the three connections joins a common line upstream of the hot-leg bypass loop isolation valves.

Flow for the cold-leg RTD bypass originates downstream of the reactor coolant pump discharge. Because of the mixing action of the pump, only one connection is required for the cold-leg bypass. This connection is located in the same relative position for each loop.

The accuracy of the RTD bypass loop temperature measurements was demonstrated during plant startup tests by comparing temperature measurements from all bypass loop RTDs with one another as well as with the temperature measurements obtained from the RTDs located in the hot leg and cold leg piping of each loop. The comparisons were done with the Reactor Coolant System in an isothermal condition. The linearity of the ΔT measurements obtained from the hot-leg and cold-leg bypass loop RTDs as a function of plant power was also checked during plant startup tests. The absolute value of ΔT versus plant power is not important as far as reactor protection is concerned. Reactor protection system setpoints are based upon percentages of the indicated ΔT at nominal full power rather than on absolute values of ΔT. For this reason, the linearity of the ΔT signals as a function of power is of importance rather than the absolute values of the ΔT. As part of the plant startup tests, the loop RTD signals were compared with the core-exit thermocouple signals.

The use of RTD bypass manifold loops on Westinghouse reactor plants is a direct result of the experience with the San Onofre Nuclear Plant, Unit 1. Several plants preceding the Kewaunee Plant in schedule have RTD bypass manifold loops. Operating experience was available to Westinghouse to confirm the adequacy of this design from Point Beach and H.B. Robinson, Unit 2.

Westinghouse has concluded that a more accurate measurement of RCS flow is not required for either plant operation or safety and the RTD bypass design improves the capability to perform maintenance without sacrificing accuracy.

It should be noted that the RTDs located in the RCS piping are not used in the control or protection system. Figure 4.2-1 of the USAR shows the various RTD locations.

During the startup tests the RTD time response and delay times of the overpower and overtemperature ΔT reactor trips were measured for comparison with the delay times used in the safety analyses. In the event the measured delay times had exceeded those previously used in the safety studies, the USAR analyses would have been reexamined to delineate the effect that the as-measured delay times have on predicted plant behavior.

During the 1989 refueling outage, the bypass loop RTDs were replaced with electrically and mechanically equivalent RTDs. The accuracy of the new RTDs was verified using RXT-9, Core Exit Thermocouple/RTD Cross-calibration. The time response of the new RTDs was verified to be faster than the original response by factory test and calculation.

Sufficient alarms, indicators and recorders are available on the control board for the operator to monitor the status of both RCS loops with regard to all operating variables and reactor trips, including RCS pump operation, flow, T, Tavg, pressurizer pressure and water level.

4.2.10 Loose Parts Monitoring System

The Loose Parts Monitoring System monitors the Reactor Vessel and the primary side of the Steam Generators for loose parts. The sensors for this system are located such that they are monitoring the natural loose parts collection points of the RCS. This system includes Control Room Alarms and an analysis panel.

If a loose part is detected by the monitor, an annunciator alerts the control room personnel allowing them to go to the analysis panel and analyze the alarm validity, including the part's impact energy and approximate location. This information is then used to determine what action, if any should be taken. The system does not perform or cause any automatic actions other than to alarm the control room of loose parts in the RCS and save the relevant data for future evaluation.

4.2 References

1. Galik, M. A.,"Topical Report - Sensitized Stainless Steel in Westinghouse Nuclear Steam Supply Systems," WCAP-7735 (Nonproprietary), August 1971
2. Ernest L. Robinson, "Bursting Tests of Steam-Turbine Disk Wheels," Transactions of the A.S.M.E., July 1944
3. Application of the Griffith-Irwin Theory of Crack Propagation to the Bursting Behavior of Disks, Including Analytical and Experimental Studies by D. H. Winne and B. M. Wundt, ASME, December 1, 1957
4. Murdock, J. W., "Performance Characteristics of Elbow Flowmeters," Transaction of the ASME, September 1964
5. Westinghouse, "Ultimate Strength Criteria to Insure No Loss of Function of Piping and Vessels Under Earthquake Load," WCAP 5890, Revision 1, October 1967
6. Westinghouse WCAP 15318, "Model 54F Replacement Steam Generator Summary Stress Report, Wisconsin Public Service Corporation, Kewaunee Nuclear Power Plant-Lower Assembly," Latest Revision
7. Lamb, J. G,. (NRC) to T. Coutu (NMC) transmitting the NRC SER for Amendment No. 168 to the Operating License, approving the Measurement Uncertainty Recapture (MUR) Power Uprate (1.4%), Letter No. K-03-094, July 8, 2003
8. NRC Safety Evaluation Report, M. B. Fairtile (NRC) to D. C. Hintz (WPS), Letter No. K-86-195, September 15, 1986

9. NRC Safety Evaluation Report, S. A. Varga (NRC) to C. W. Giesler (WPS), Letter No. K-83-180, September 1, 1983

10. NRC Safety Evaluation Report, S. A. Varga (NRC) to C. W. Giesler (WPS), Letter No. K-84-8, January 6, 1984

11. NRC Safety Evaluation Report, M. B. Fairtile (NRC) to D. C. Hintz (WPS), Letter No. K-85-14, January 16, 1985

12. Lamb, J. G., (NRC) to M. E. Reddeman (NMC) transmitting the NRC SER approving the exemption from requirements of 10 CFR 50, Appendix G, Appendix H, and Section 50.61, Letter No. K-01-061, May 1, 2001

Table 4.2-1
Materials of Construction of the Reactor Coolant System Components

Component	Section	Materials
Reactor Vessel Closure Head	One - Piece Forging	SA-508, Grade 3, Class 1 Type 304 or equivalent and Inconel
	Thermal Shield and Internals Core Support Insulation	A-240, Type 304 Inconel Reflective Type (100% type 304 SS construction)
	Control Rod Housing Instrumentation Nozzles	316 SS Inconel 690/304 SS
	Pressure Plate	SA-302, Grade B/SA-533, Grade B Class 2
Steam Generator	Cladding, Stainless Weld Rod	Type 304 or equivalent
	Cladding for Tube Sheets Tubes	Alloy 600
	Channel Head Forging	Alloy 690 SA-508, Class 3A
Pressurizer	Shell Heads and Nozzles External Plate (Skirt) Cladding, Stainless Internal Plate Internal Piping	SA-533, Grade A, Class 1 SA-216, Grade WCC SA-516, Grade 70 Type 304 or equivalent SA-240, Type 304 SA-376, Type 316
Pressurizer Relief Tank	Shell Heads	A-285 GR C A-285 GR C
Piping	Pipes Fittings Nozzles	A-351, CF8M A-351, CF8M A-182 F316
Pump	Shaft Impeller Casing Locknut Bearings	Type 347 A-351, CF8 A-351, CF8M 17-4PH Stellite on graphite

Table 4.2-1
Materials of Construction of the Reactor Coolant System Components

Component	Section	Materials
Valves	Pressure Containing Parts	A-351, CF8M, and A-182 F316
	Shafts, Stems	17-4PH, ASME SB
	Hard Surfacing	637-N07718
	Bushings, Bearings	Stellite 6
	Springs	Cast stellite
	Miscellaneous Fasteners &	Inconel X
	Washers	410 and 416 SS

Table 4.2-2
Reactor Coolant Water Chemistry Specification

Electrical Conductivity	Determined by the concentration of boric acid and alkali present. Expected range is < 1.0 to 40 µMhos/cm at 25°C.
Solution pH	See USAR Figure 4.2-11
Oxygen, ppm, maximum	0.10
Chloride, ppm, maximum	0.15
Fluoride, ppm, maximum	0.15
Hydrogen, cc (STP)/kg H_2O	25-50
Total Suspended Solids, ppm	Monitor for trends
pH Control Agent (Li^7OH)	See USAR Figure 4.2-11
Boric Acid as ppm Boron	Variable from 0 to ~ 4000

Table 4.2-3
Reactor Vessel Support Structure Cooling Data

Design Reactor Vessel Temperature, t_w	650°F
Air Flow Rate Per Pad	1500 cfm
Bulk Air Temperature, t_μ	120°F
Predicted Heat Transfer Coefficient, h	6.7 Btu/hr-ft²
Fin Efficiency, η	0.406
Predicted Nozzle Interface Temperature, t_i	423°F
Predicted Temperature at the Top of the Side Walls of the Finned Pad, t_R	252°F
Predicted Temperature at the Bottom of the Side Walls of the Finned Pad, t_L	133°F
Heat Dissipation Rate Per Each Wall of the Finned Pad, q''_t	5580 Btu/hr

Table 4.2-4
Reactor Vessel Toughness Data

Component	MATL Type	CU%	NDTT °F	50 ft-lb MIL LONG	35 FT-LB MIL TRANS	RTNDT °F	Upper Shelf ft-lb	
							Long	Trans
CL. HD.	A508 Grade 3 CL 1	0.06[e]	-60[e]	164[e]	88[e]	-60[e]	0	182[f]
VES. SH. FLG.	A508,2	0.14	60[c]	25	68[a]	60	124	81[b]
INJEC. NOZ.	A508,2	NA	60[c]	-10	43[a]	60	106	69[b]
INJEC. NOZ.	A508,2	NA	60	-7	40[a]	60	80	52[b]
INLET NOZ.	A508,2	NA	55[c]	29	44[a]	55	134	87[b]
INLET NOZ.	A508,2	NA	60[c]	-24	8[a]	60	126	82[b]
OUTLET NOZ.	A508,2	NA	60[c]	46	63[a]	60	122	79[b]
OUTLET NOZ.	A508,2	NA	25[c]	-22	5[a]	25	162	105[b]
UPPER SHL.	A508,2	NA	40	65	95[a]	40	122	79[b]
INTER SHL.	A508,2	0.06	60	43	67	60	153	135
LOWER SHL.	A508,2	0.06	20	-24	6	20	122	148
TRANS. RING	A508,2	NA	.60[c]	50	77[a]	60	130	85[b]
BOT. HD. DOM.	A533B1	0.11	-30	-50	38[a]	-22	126	82[b]
WELD	WELD	0.287[d]	-50[d]	NA	58	0	NA	125
HAZ CORE	HAZ	NA	NA	-15	NA	NA	172	NA

Table 4.2-4
Reactor Vessel Toughness Data

Component	MATL Type	CU%	NDTT °F	50 ft-lb MIL LONG	35 FT-LB MIL TRANS	RTNDT °F	Upper Shelf ft-lb Long	Upper Shelf ft-lb Trans

a. Estimated (77=T-lb/54 mil temp for longitudinal data)
b. Estimated (65% of longitudinal shelf)
c. Estimated (60°F or 100 ft-lb. temp, whichever is less)
d. Reference WCAP-15074
e. MHI CMTR JQA-03-080
f. Letter WPS-03-47

Figure 4.2-1 Reactor Coolant System Process-Flow Diagram

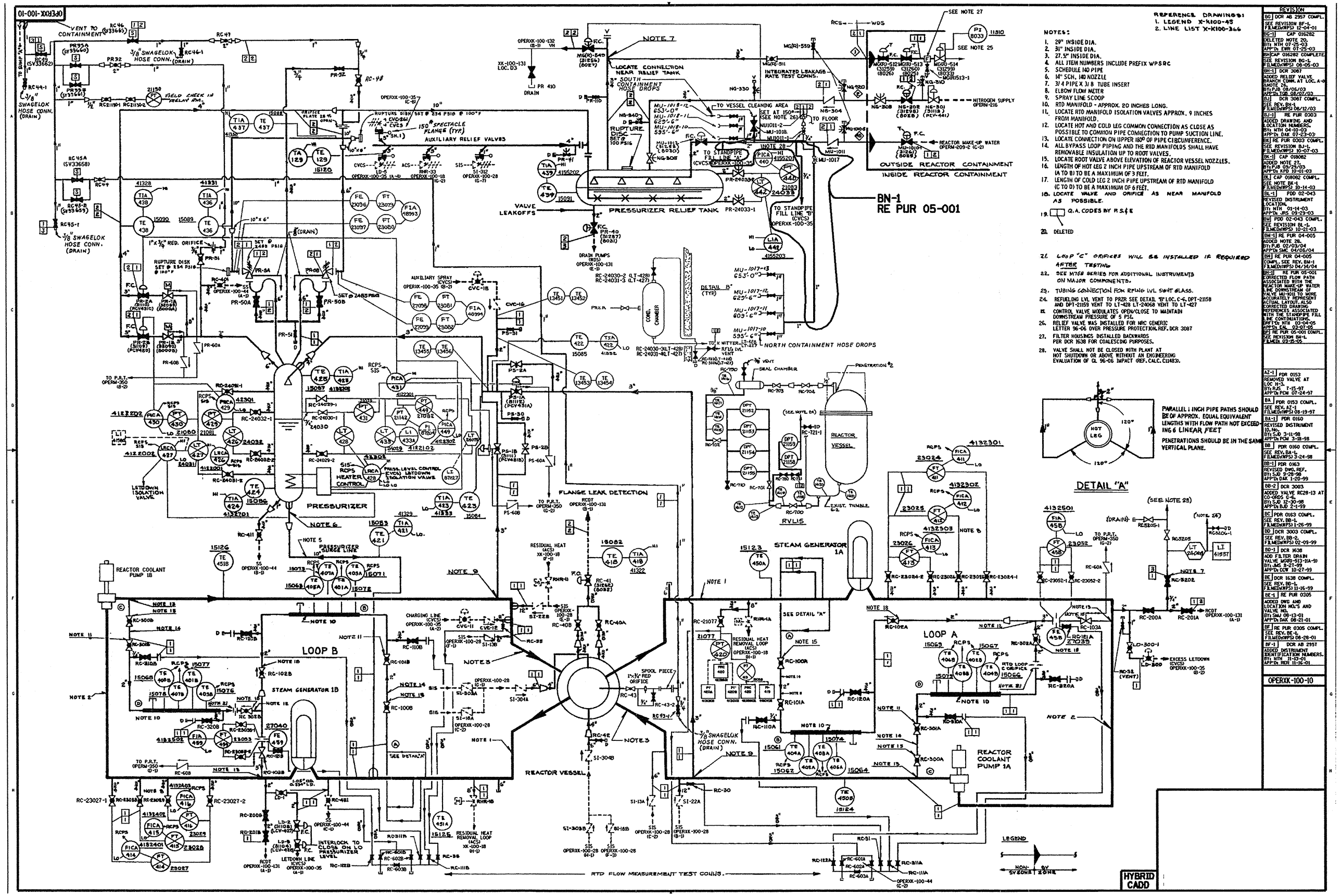

Figure 4.2-2 Kewaunee Reactor Vessel Schematic

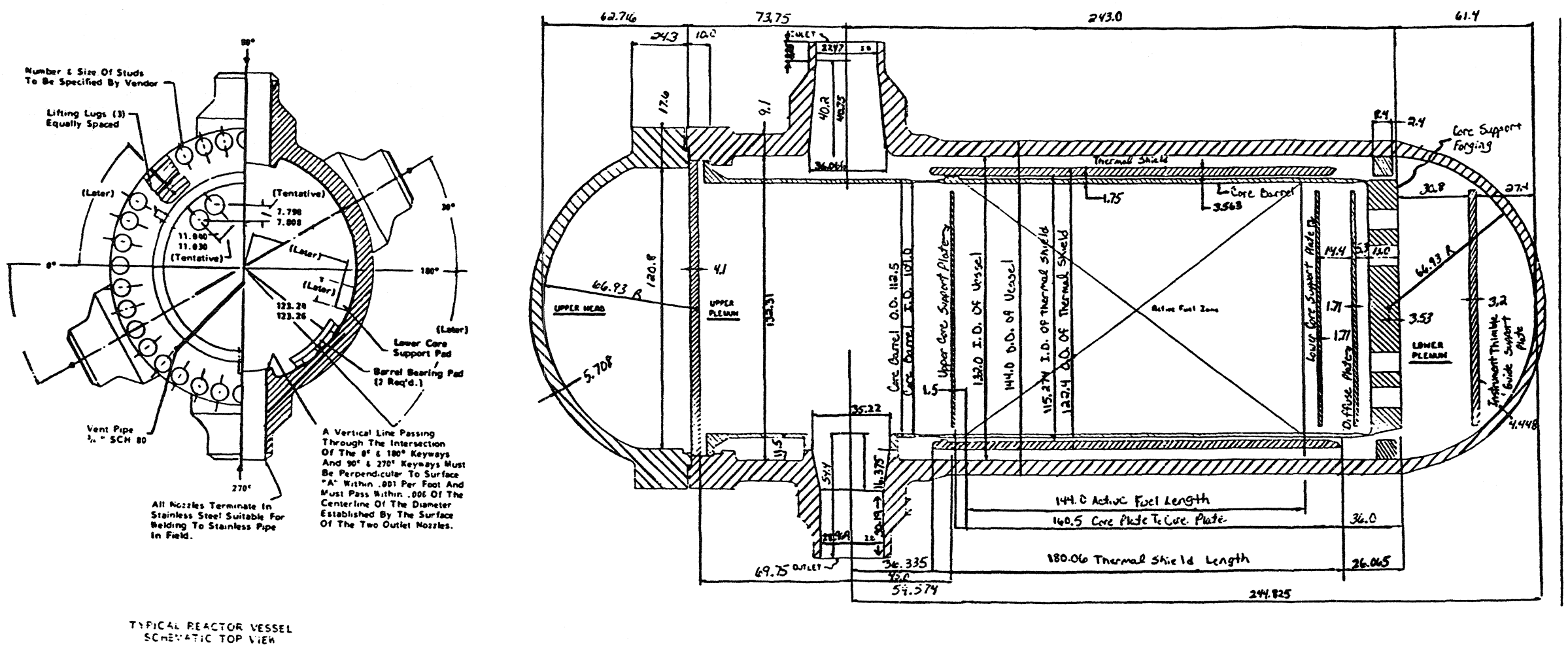

Figure 4.2-3 Schematic of Reactor Vessel Support

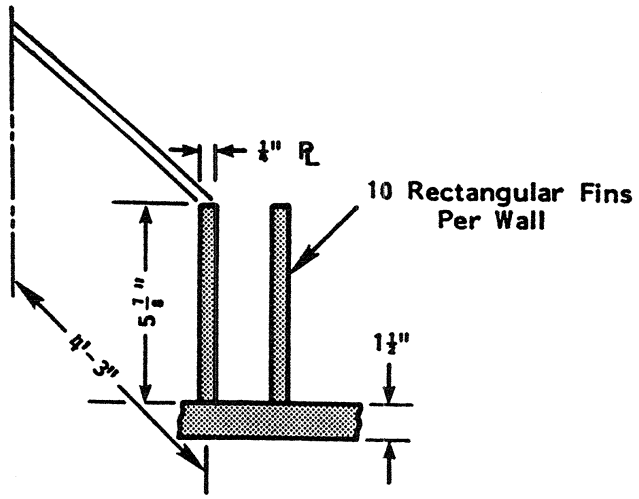

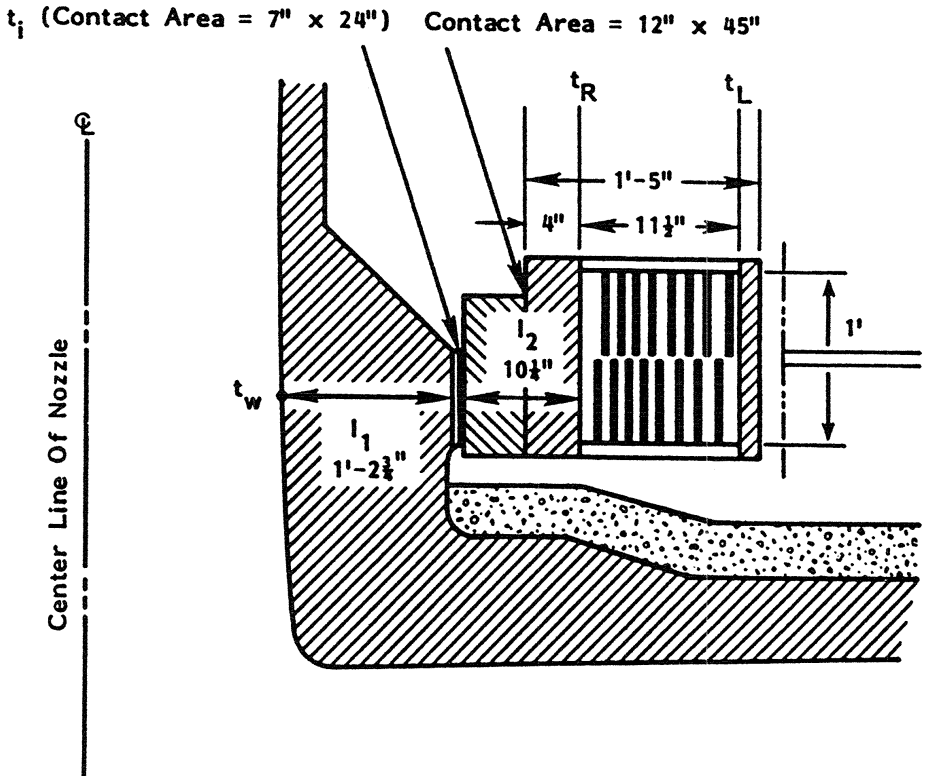

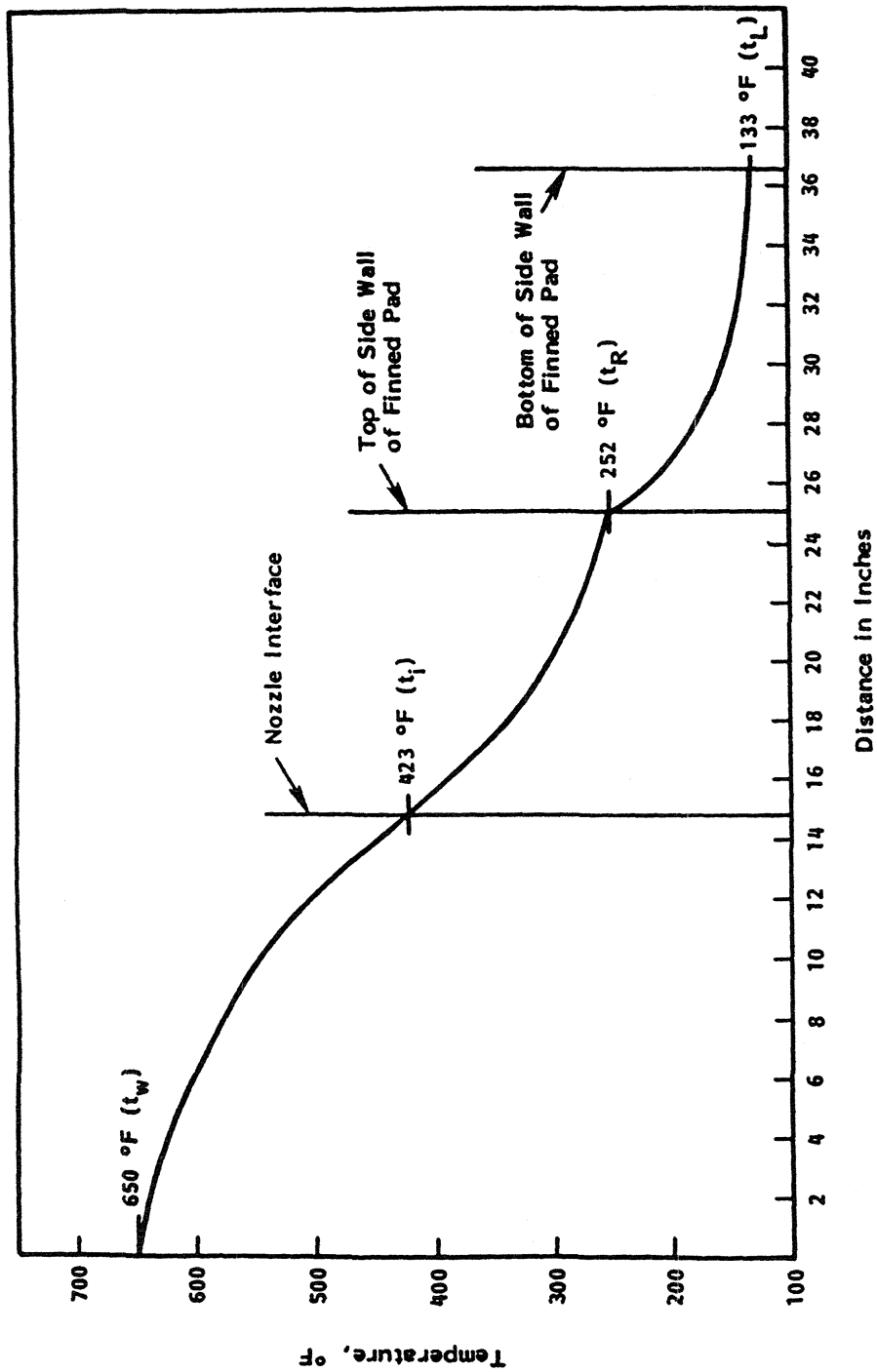

Figure 4.2-4 Temperature Drop in the Reactor Support System

Figure 4.2-5 Pressurizer

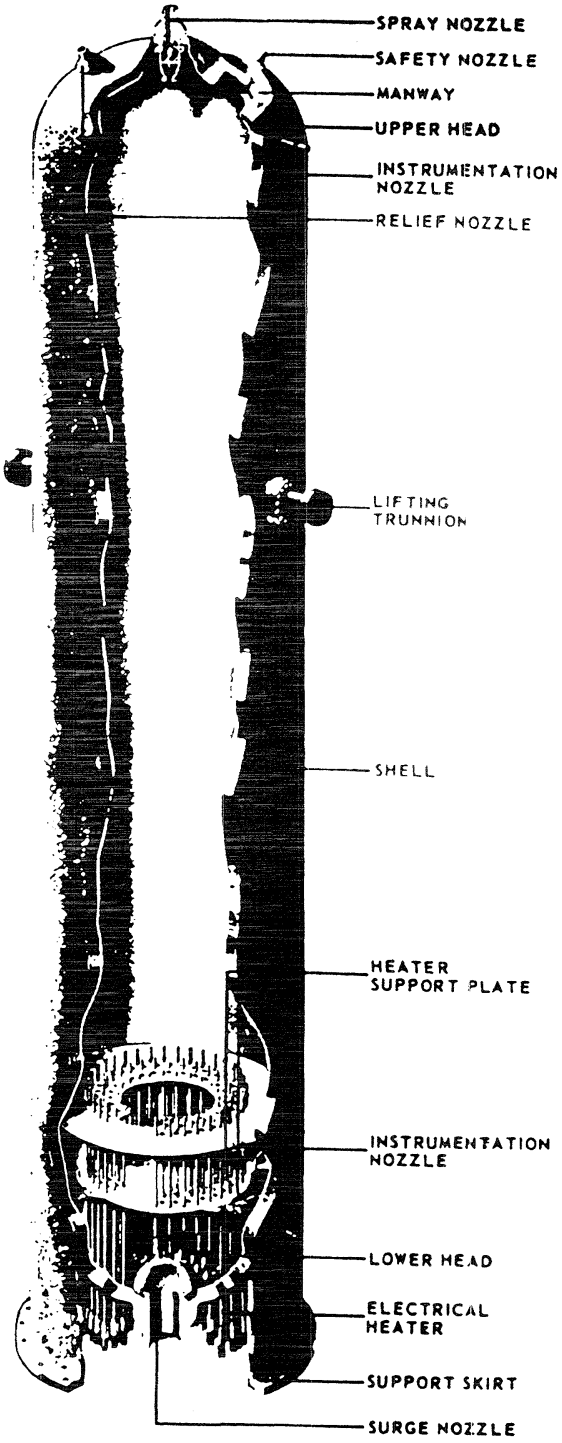

Figure 4.2-6 Steam Generator

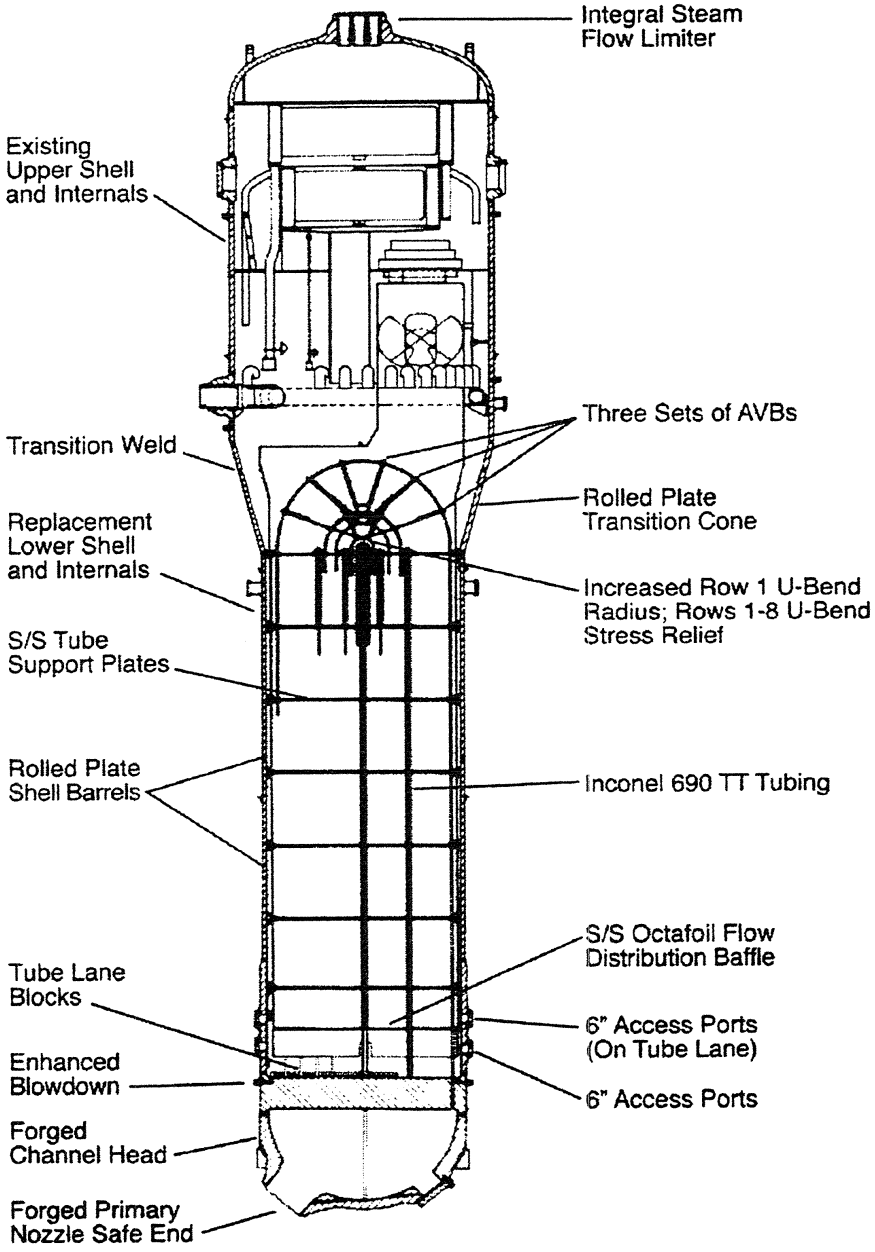

Figure 4.2-7 Reactor Coolant Controlled Leakage Pump

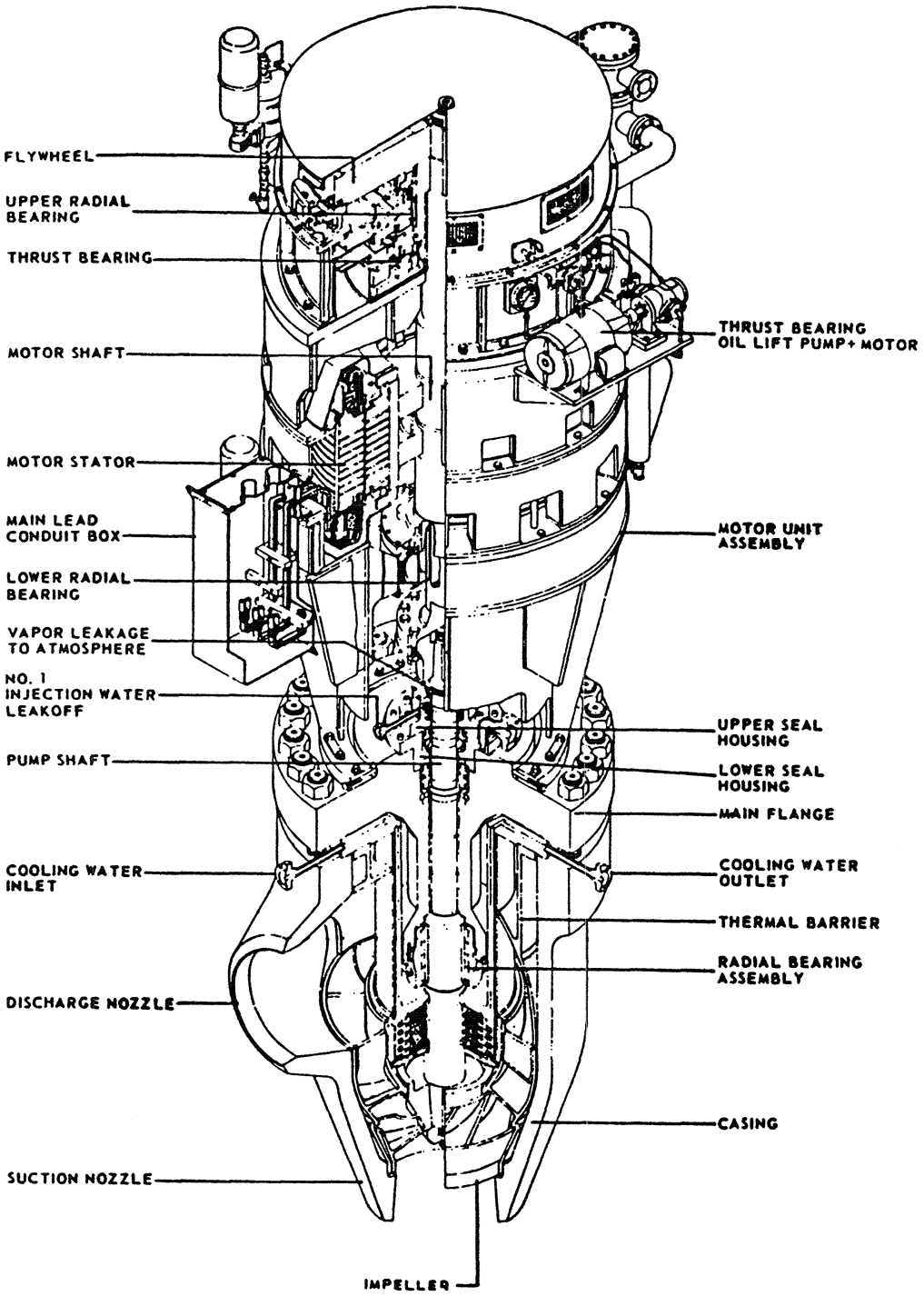

Figure 4.2-8 Reactor Coolant Pump Estimated Performance Characteristics

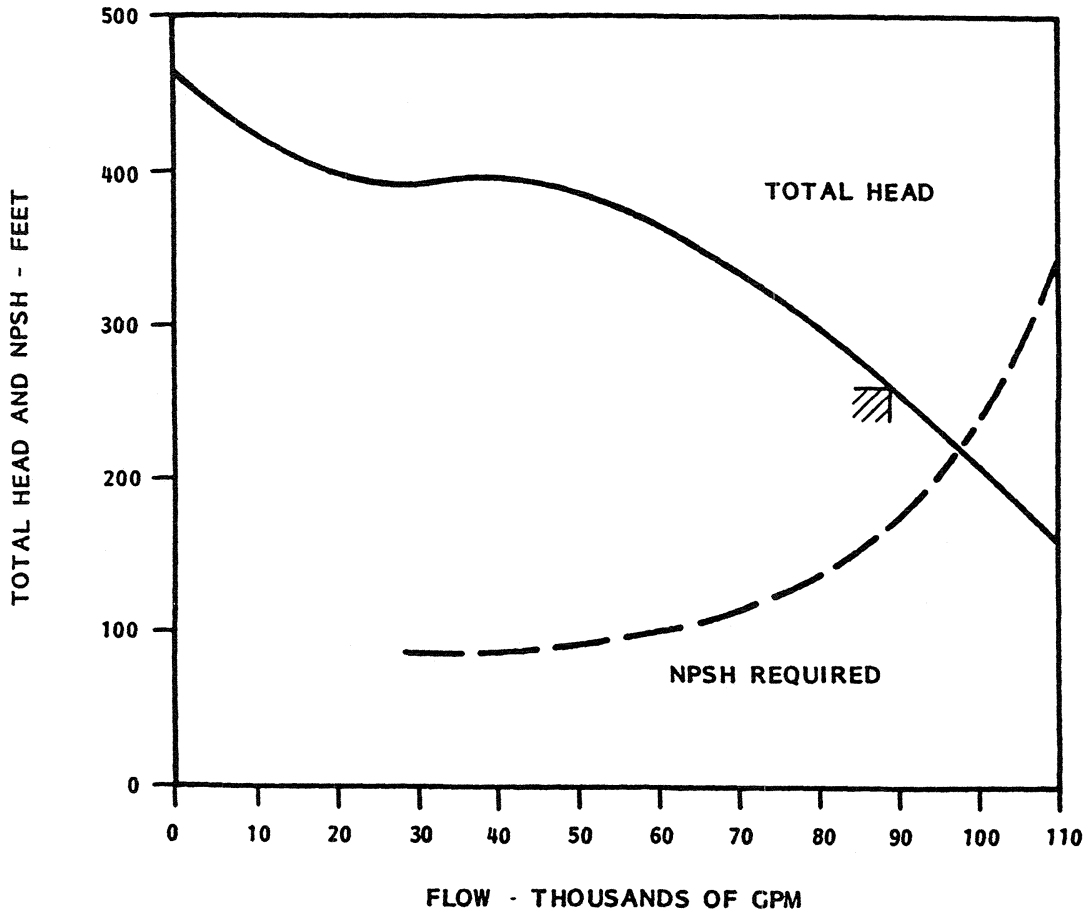

Figure 4.2-9 Reactor Coolant Pump Flywheel

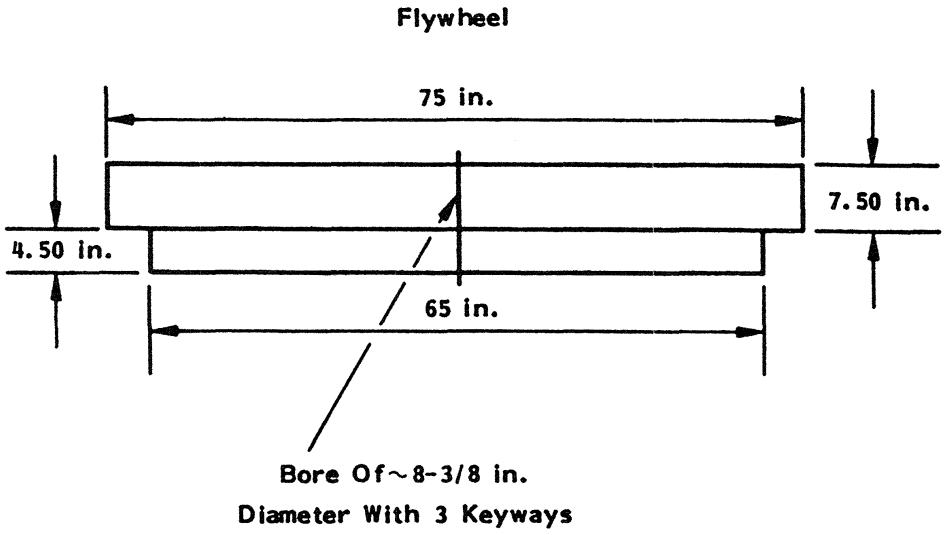

Note: The Plates Are Bolted Together With The Bolts Aligned Perpendicular To The Planes Of The Plates

Figure 4.2-10 Reactor Coolant Pump Flywheel Stress

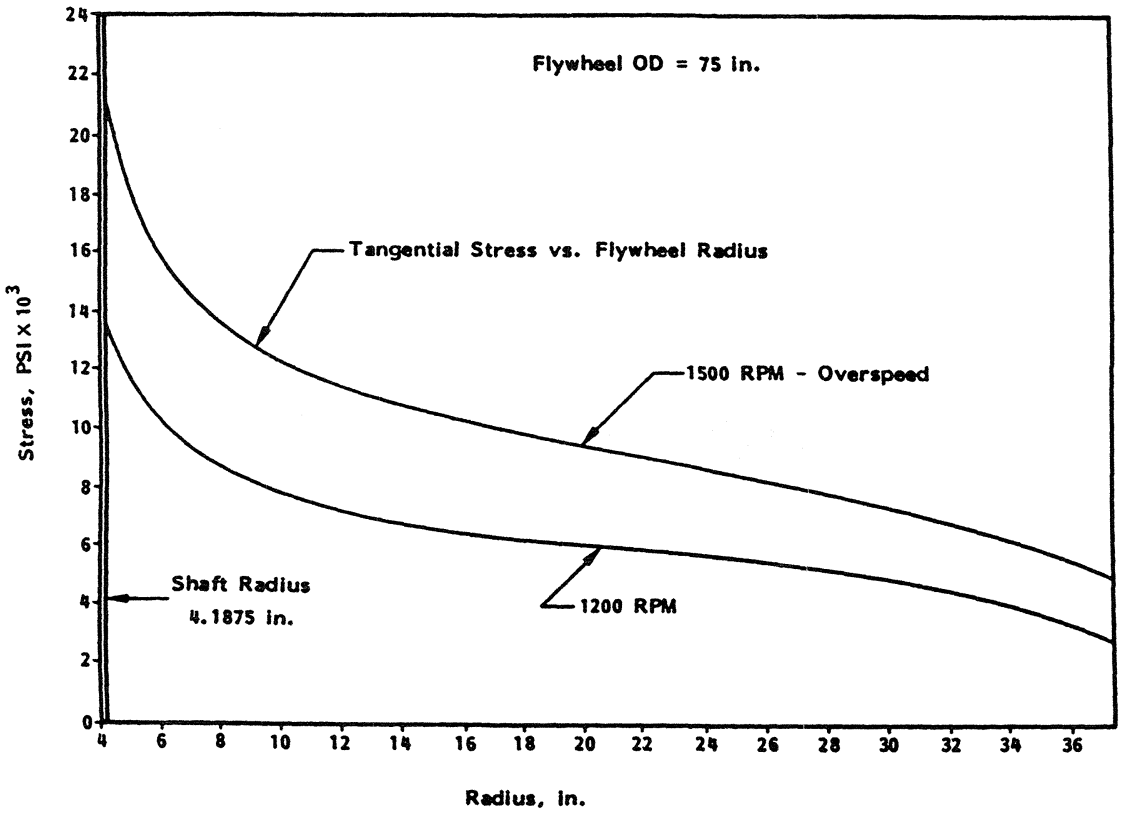

Figure 4.2-11 KPS Coordinated Lithium Program

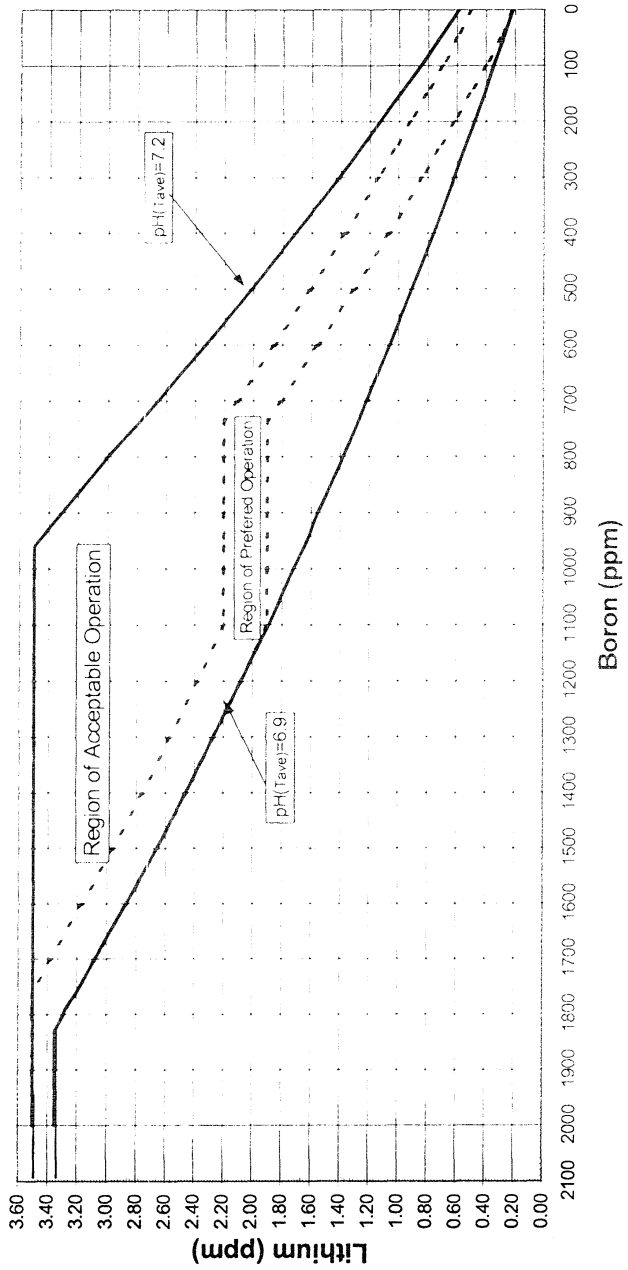

This curve was generated from data in the EPRI PWR Primary Water Chemistry Guidelines Revision 4 dated March 1999

Intentionally Blank

4.3 SYSTEM DESIGN EVALUATION

4.3.1 Safety Factors

The safety of the reactor vessel and all other RCS pressure containing components and piping is dependent on several major factors including design and stress analysis, material selection and fabrication, quality control and operations control.

4.3.1.1 Reactor Vessel

The reactor vessel has a 132" ID. A stress evaluation of the reactor vessel has been carried out in accordance with the rules of Section III of the ASME Nuclear Vessel Code. The evaluation demonstrates that stress levels are within the stress limits of the Code. Table 4.3-1 presents a summary of the results of the stress evaluation.

A summary of fatigue usage factors for components of the reactor vessel is given in Table 4.3-2. The effect of τ heating on the cumulative usage factor is negligible.

The cycles specified for the fatigue analysis are the result of an evaluation of the expected plant operation coupled with experience from nuclear power plants now in service, such as Yankee-Rowe. The conservatism of the design fatigue curves used in the fatigue analysis has been demonstrated by the Pressure Vessel Research Committee (PVRC) in a series of cyclic pressurization tests of model vessels fabricated to the code. The results of the PVRC tests showed that no crack initiation was detected at any stress level below the code allowable fatigue curve and that no crack progressed through a vessel wall in less than three times the allowable number of cycles. Similarly fatigue tests have been performed on irradiated pressure vessel steels with comparable results (Reference 1).

The vessel design pressure is 2485 psig while the normal operating pressure will be 2235 psig. The resulting operating membrane stress is therefore amply below the code allowable membrane stress to account for operating pressure transients.

The stress allowed in the vessel in relation to operation below NDT temperature and DTT (NDT temperature plus 60°F) to preclude the possibility of brittle failure is:

- At DTT a maximum stress of 20 percent yield
- From DTT to DTT minus 200°F a maximum stress decreasing from 20 percent to 10 percent yield
- Below DTT minus 200°F a maximum stress of 10 percent yield

These limits are based on a conservative interpretation of the Fracture Analysis Diagram developed at the Naval Research Laboratory (Reference 2, Reference 3 and Reference 4) after many years of research and confirmed by extensive correlation with service failures. There have

been no known service failures under conditions permitted by these limits. The Fracture Analysis Diagram was the most widely known and generally accepted criterion for brittle fracture prevention and includes linear elastic fracture mechanics concepts. These limits established by the Fracture Analysis Diagram have been correlated with linear elastic fracture mechanics insofar as possible, (Reference 5) and are conservative in providing protection against brittle fractures. The stress limits are maintained by prescribing operating procedures, which rely upon administrative pressure and temperature control during heatup and cooldown, as described in Reference 6.

The actual shift in NDT temperature can be established periodically during plant operation by testing of vessel material samples which are irradiated cumulatively by securing them near the inside wall of the vessel in the core area. To compensate for any increase in the NDT temperature caused by irradiation, the limits given in the plant operating manual on the pressure-temperature relationship are periodically changed to stay within the stress limits which are stated above, during heatup and cooldown.

The vessel closure contains 48 6-inch studs. The stud material is ASTM A-540, which has a minimum yield strength of 104,400 psi at design temperature. The membrane stress in the studs when they are at the steady state operational condition is less than half this value as specified in Table 4.3-1. This means that about half of the 48 studs have the capability of withstanding the hydrostatic end load on vessel head without the membrane stress exceeding yield strength of the stud material at design temperature.

The emphasis on conservative operation, in setting up the temperature-pressure relationship, is placed on heatup and cooldown because the normal operating temperature always exceeds even the highest anticipated DTT during the life of the plant. The emphasis on conservatism is required for heatup and cooldown rates because long term irradiation of the vessel raises the DTT and thereby limits the heatup or cooldown rates. The conservatism in the limits stated above are:

- Use of a stress concentration factor of 4 on assumed flaws in calculating the stresses
- Use of nominal yield of material instead of actual yield
- Neglecting the increase in yield strength resulting from radiation effects

The factor of four in Item 1 above is not an actual stress concentration factor, such as described in Article 4 Design of Section III, but is a margin of conservatism based on the Fracture Analysis Diagram in ASTM E208 as well as the stress limits maintained by the prescribed operating procedures which rely upon administrative pressure and temperature control during heatup and cooldown (Reference 6). At the DTT, the stresses are 20 percent of the yield strength versus a prescribed upper limit of 80 percent of the yield strength; therefore, at this point there is a margin of four (80%/20%).

Since the Fracture Analysis Diagram was based on a plot of nominal stress versus temperature and different size flaws (cracks) are assumed, the use of actual stress concentration factors does not apply.

As part of the plant operator training program, supervisory and operating personnel receive instructions in reactor vessel design, fabrication, and testing, as well as present and future precautions necessary for pressure testing and operating modes. The need for record keeping is stressed, such records being helpful for future summation of time at power level and temperature which tends to influence the irradiated properties of the material in the core region. These items are incorporated in the operating instructions.

4.3.1.2 Steam Generators

The pressure retaining portions of the replacement steam generators, including the transition cone, lower shell, tubesheet, tubes and channel head (i.e., lower unit) were designed and constructed to the requirements of the ASME Boiler and Pressure Vessel Code, Section III - Division 1, Subsection NB, 1986 Edition and 1987 Addenda. The steam domes, including a portion of the transition cone, remain from the original steam generators which were designed and manufactured in accordance with ASME Boiler and Pressure Vessel Code, Section III, 1965 Edition, meeting Class A requirements.

The Kewaunee steam generator design specification, required by ASME Section III, NCA 3250 (Reference 11 and Reference 12) identifies the requirements for procurement, manufacturing and inspection during manufacturing. The design specification also specifies the loadings that must be analyzed in the design report. The design report is required by ASME Section III, NCA 3350 (Reference 10, Reference 13, Reference 14, Reference 15, Reference 16 and Reference 17).

Kewaunee's replacement steam generator lower units were manufactured in accordance with the design specification (Reference 11) and were NPT stamped by Ansaldo. Kewaunee's steam domes are from original construction, they were manufactured in accordance with the original equipment specification (Reference 12) and were N stamped by Westinghouse. In the course of replacing the lower units, the steam domes were modified by installing steam flow limiters inside the steam nozzles, feedwater nozzle adapter pieces were installed on the feedwater nozzles, new feedwater ring assemblies with welded thermal sleeves and supports were installed, and modifications to the moisture separation equipment were installed (Reference 11).

The Kewaunee steam generators were shown to meet applicable Code requirements via the design report, which considers the steam generator as an entire unit, replacement lowers and original/modified steam domes (Reference 10, Reference 13, Reference 14, Reference 15, Reference 16 and Reference 17). The Kewaunee steam generators were evaluated at an uprated power of 1772 MWt during the power uprate project and were shown to meet applicable code requirements (Reference 18).

4.3.2 Reliance on Interconnected Systems

The principal heat removal systems which are interconnected with the RCS are the Steam and Feedwater Systems and the Safety Injection and Residual Heat Removal Systems. The RCS is dependent upon the steam generators, and the steam, feedwater, and Condensate Systems for decay heat removal from normal operating conditions to a reactor coolant temperature of approximately 350°F. The layout of the system ensures the natural circulation capability to permit plant cooldown following a loss of all reactor coolant pumps.

The flow diagram of the Steam and Power Conversion System is shown in Figure 10.2-1 through Figure 10.2-8. If the condenser is not available, steam generated by decay heat is vented to the atmosphere. The Auxiliary Feedwater System will supply water to the steam generators when the main feedwater pumps are off. The system is described in Chapter 6.

The Safety Injection System is described in Chapter 6. The Residual Heat Removal System is described in Chapter 9.

4.3.3 System Integrity

A complete stress analysis of major components of the RCS, which reflects consideration of all design loadings detailed in the design specification was prepared by the manufacturer. The analysis showed that the reactor vessel, steam generator, pump casing and pressurizer comply with the stress limits of Section III of the ASME Code. A similar analysis of the piping showed that it complies with the stress limits of the applicable USAS Code.

As part of the design control on materials, Charpy V-notch toughness tests are run on all ferritic material used in fabricating pressure parts of the reactor vessel, steam generator and pressurizer to provide assurance for hydro-testing and operation in the ductile region at all times. In addition, drop-weight tests and Charpy V-notch transition temperature curves are performed on the reactor vessel materials.

As an assurance of system integrity, all components in the system are hydro-tested at 3107 psig prior to initial operation. Note that ASME Code Case N416-2 was approved subsequent to the installation of the replacement steam generator allowing a system pressure test in lieu of the replacement steam generator secondary side hydro test (USAR Section 4.4).

4.3.4 Overpressure Protection

The Reactor Coolant System is protected against overpressure by safety valves located on the top of the pressurizer. The safety valves on the pressurizer are sized to prevent system pressure from exceeding the design pressure by more than 10 percent in accordance with Section III of the ASME Boiler and Pressure Vessel Code. The capacity of the pressurizer safety valves is determined from considerations of:

1. the reactor protective system, and

2. accident or transient conditions which may potentially cause overpressure.

The combined capacity of the safety valves is equal to or greater than the maximum surge rate resulting from complete loss of load without a direct reactor trip or any other control, except that the safety valves on the secondary plant are assumed to open when the steam pressure reaches the secondary plant safety valve setting. See Section 14.1.9 for a discussion of the loss of load transient. See Reference 7 for a complete analysis of the protection against overpressurization of either the RCS or the Steam System. This report shows that following a complete loss of heat sink, i.e., steam flow to the turbine, protection against overpressure is afforded by the pressurizer and steam generator safety valves along with any of a number of reactor trip functions.

Low Temperature Overpressure Protection (LTOP) of the reactor vessel is provided by a relief valve on the common portion of the Residual Heat Removal (RHR) suction line from the RCS loops. See Section 9.3.3 for a discussion of the KPS LTOP System.

4.3.5 System Incident Potential

The potential of the RCS as a cause of accidents is evaluated by investigating the consequences of certain credible types of components and control failures as discussed in Section 14.1 and 14.2. Reactor coolant pipe rupture is evaluated in Section 14.3.

Following the TMI accident which was the result of an equivalent small-break-loss-of-coolant-accident which could have been terminated by the closure of the PORV block valve, the NRC issued NUREG-0737. Items II.K.3.1 and II.K.3.2 of NUREG-0737 specifically addressed the potential for a similar accident occurring and whether automatic PORV isolation would be necessary to protect against such an event.

Kewaunee, responded to these items by referencing the generic Westinghouse report WCAP-9804 (see Reference 8). This report included historical PORV failure data and documentation of actions taken since the TMI event to reduce the probability of a stuck-open pressurizer PORV. The report, applicable to all Westinghouse plants which have incorporated the post-TMI hard ware and procedural changes relative to stuck-open PORVs, concludes that plant modifications and actions taken since the TMI event have resulted in a 78 percent reduction in the probability of a similar accident occurring. On the basis of WCAP-9804, the NRC has determined that sufficient improvements in safety have been made and, therefore, has determined that the proposed automatic PORV block valve isolation system would not be required (see NRC SER in Reference 9).

4.3 References

1. Fatigue Properties of Irradiated Pressure Vessels by Gibbon et al., ASTM STP 426, pages 408 to 437
2. Pellini, W. S., and P. P. Puzak, "Fracture Analysis Diagram Procedures for the Fracture Safe Engineering Design of Steel Structures," NRL Report 5920, March 15, 1963, Welding Research Council Bulletin No. 88 (1963)
3. Pellini, W. S., and P. P. Puzak, "Practical Considerations in Applying Laboratory Fracture Test Criteria to the Fracture Safe Design of Pressure Vessels," NRL Report 6630, November 5, 1963
4. Pellini, W. S., and F. J. Loss, "Integration of Metallurgical and Fracture Mechanics Concepts of Transition Temperature Factors Relating to Fracture-Safe Design for Structural Steels," Welding Research Council Bulletin No. 141 (1969)
5. Mager, T. R., an W. S. Hazelton, "Evaluation of Linear Elastic Fracture Mechanics of Radiation Damage to Pressure Vessel Steels," Vienna IAEA-Meeting, June 2-9, 1969
6. Porse, L., "Reactor Vessel Design Considering Radiation Effects," ASME 6 WA 100
7. Mangan, M. A., WCAP 7769, "Topical Report, Overpressure Protection for Westinghouse Pressurized Water Reactors," October, 1971 (W NES Class 3)
8. Westinghouse Electric Corporation, "Probabilistic Analysis and Operational Data in Response to NUREG-0737, Item II.K.3.2 for Westinghouse NSSS Plants," WCAP-9804, February 1981
9. NRC SER, S. A. Varga (NRC) to C. W. Giesler (WPS), Letter No. K-83-188, September 19, 1983
10. Westinghouse WCAP 15318, Model 54F Replacement Steam Generator Stress Report Volumes 1-12, Wisconsin Public Service Corporation, Kewaunee Nuclear Power Plant - Lower Assembly, latest revision
11. Westinghouse Report 414A03, Model 54F Replacement Steam Generator Complete Lower Assembly and Modified Upper Assembly - Design Specification, Revision 6, April 17, 2001
12. Westinghouse Equipment Specification G-677164, Reactor Coolant System Series "51" Steam Generator, Revision 1, December 18, 1969 and Equipment Specification Addendum No. 677031, Revision 4, March 20, 1975
13. Westinghouse WCAP 15319, Model 54F Replacement Steam Generator Seismic Analysis, Volume 1, Wisconsin Public Service Corporation, Kewaunee Nuclear Power Plant - Lower Assembly, latest revision

14. Westinghouse WCAP 15324, Model 54F Replacement Steam Generator Feedwater Nozzle, Feedwater Ring, Steam Outlet Nozzle, Elliptical Head, and Upper Shell, Steam Water Deflector/Chimney/Drain Pipe and Secondary Manway Stress Analyses, Volumes 1-5, Wisconsin Public Service Corporation, Kewaunee Nuclear Power Plant - Lower Assembly, latest revision

15. Westinghouse WCAP 15439, Model 54F Replacement Steam Generator J-Nozzle to Feed Ring Weld Analysis, Wisconsin Public Service Corporation, Kewaunee Nuclear Power Plant - Lower Assembly, latest revision

16. Westinghouse WCAP 15374, Model 54F Replacement Steam Generator Flow Induced Vibration and Tube Wear, Wisconsin Public Service Corporation, Kewaunee Nuclear Power Plant - Lower Assembly, latest revision

17. Westinghouse WCAP 15375, Model 54F Replacement Steam Generator LOCA Rare Fraction and Shaking, Wisconsin Public Service Corporation, Kewaunee Nuclear Power Plant - Lower Assembly, latest revision

18. Westinghouse WCAP-16039, “Power Uprate Project, Kewaunee Nuclear Power Plant, NSSS Engineering Report,” February 2003

Table 4.3-1
Summary of Primary Plus Secondary Stress Intensity for Components of the Reactor Vessel

Area	Stress Intensity (psi)	Allowable Stress 3 S_m (psi) (Operating Temperature)
Control Rod Housing	42,800	60,000
Head Flange	49,400	80,100
Vessel Flange	67,400	80,100
Closure Studs	109,300	118,800
Primary Nozzle:		
Inlet	43,090	80,100
Outlet	48,800	80,100
Vessel Support	36,460	80,100
Vessel Wall Transition	32,240	80,100
Core Support Guide	57,530	69,900
Bottom Head to Shell	28,620	80,100
Bottom Instrumentation Tubes	57,770	69,900
Safety Injection Nozzle	46,840	80,100

Table 4.3-2
Summary Cumulative Fatigue Usage Factors for Components of the Reactor Vessel

Item	Usage Factor*	Stress Intensity (psi)	Allowable Stress Intensity (psi) (Operating Temperature)
CRDM Housing	0.27	42,800	60,000
Head Flange	0.057	49,400	80,100
Vessel Flange	0.5755	67,400	80,100
Closure Studs	0.5932	109,300	118,800
Primary Nozzles			
Inlet	0.0331	43,090	80,100
Outlet	0.1261	48,800	80,100
Vessel Support	0.900	36,460	80,100
Vessel Wall Transition	0.0039	32,240	80,100
Core Support Guide	0.204	57,530	69,900
Bottom Head to Shell	0.004	28,620	80,100
Bottom Instrumentation Tubes	0.3836	57,770	69,900
Safety Injection Nozzle	0.2947	46,840	80,100

* Covers all transients. Usage factor as defined in Section III, ASME Boiler and Pressure Vessel Code, Nuclear Vessels.

Intentionally Blank

4.4 TESTS AND INSPECTIONS

4.4.1 Reactor Coolant System Inspection

4.4.1.1 Non-Destructive Inspection of Material and Components

Table 4.4-1 summarizes the pre-service and fabrication inspections for all RCS components. In this table all of the non-destructive tests and inspections which were required by Westinghouse specifications on RCS components and materials are specified for each component. All tests, which were required by the applicable codes, are included in this table. Westinghouse requirements, which are more stringent in some areas than those requirements specified in the applicable codes, are also included. The fabrication and quality control techniques used in the fabrication of the RCS were equivalent to those used for the reactor vessel. The Reactor Coolant System piping was installed, welded, inspected and non-destructively examined according to the requirements of the project specification and installer's quality assurance procedures which are on file at the Kewaunee plant. The welding is performed in accordance with Section IX of the ASME Boiler and Pressure Vessel Code. Tests and inspections were documented to an extent which conformed to the requirements of the AEC (NRC).

Westinghouse requires, as part of this reactor vessel specification that certain special tests, which are not specified by the applicable codes, are performed. These tests are listed below:

- Ultrasonic Testing - Westinghouse required that a 100 percent volumetric ultrasonic test of reactor vessel plate for shear wave be performed in addition to code requirements. This 100 percent volumetric ultrasonic test is a severe requirement, but it assures that the plate is of the highest quality.

- Radiation Surveillance Program - In the surveillance program, the evaluation of the radiation damage is based on pre-irradiation testing of Charpy V-notch and tensile specimens and post-irradiation testing of Charpy V-notch, tensile and Wedge Opening Loading (WOL) fracture mechanics test specimens.

These programs are directed toward evaluation of the effect of radiation on the fracture toughness of reactor vessel steels based on the transition temperature approach and the fracture mechanics approach, in accordance with ASTM-E-185-82, "Recommended Practice for Surveillance Tests for Nuclear Reactor Vessels." The surveillance program does not include thermal control specimens. These specimens are not required since the surveillance specimens will be exposed to the combined neutron irradiation and temperature effects and the test results will provide the maximum transition temperature shift. Thermal control specimens as considered in ASTM-E-185-82 would not provide any additional information on which the operational limits for the reactor vessel are set.

The reactor vessel surveillance programs use six specimen capsules, which is more than the minimum number recommended by ASTM E 185-82. The capsules are located about 3 inches

from the vessel wall directly opposite the center portion of the core. Sketches of an elevation and plan view showing the location and dimensional spacing of the capsules with relation to the core, thermal shield, vessel and weld seams are shown in Figure 4.4-1 and Figure 4.4-2, respectively. The capsules can be removed when the vessel head and upper internals are removed, and can be replaced when the internals are removed. The capsules contain reactor vessel steel specimens from the shell material located in the core region of the reactor and associated weld metal and heat affected zone metal. (As part of the surveillance program, a report of the residual elements in weight percent to the nearest 0.01 percent was made for surveillance material base metals and as deposited weld metal.) In addition, 48 correlation monitors made from fully documented specimens of SA533 Grade B Class 1 material obtained through Subcommittee II of ASTM Committee E10, Radioisotopes and Radiation Effects are inserted in the capsules. The six capsules contain approximately 54 tensile specimens, 288 Charpy V-notch specimens (which include weld metal and heat affected zone material) and 54 WOL specimens. No WR oriented Charpy specimens are included in the reactor vessel material surveillance program. Dosimeters including Ni, Cu, Fe, Co-Al, Cd-shielded Co-Al, Cd-shielded Np-237, and Cd-shielded U238 are placed in filler blocks drilled to contain the dosimeters. The dosimeters permit evaluation of the flux seen by the specimens and vessel wall. In addition, thermal monitors made of low melting alloys are included to monitor temperature of the specimens. The specimens are enclosed in a tight fitting stainless steel sheath to prevent corrosion and ensure good thermal conductivity. The complete capsule is helium leak tested. Vessel material sufficient for at least 2 capsules is kept in storage should the need arise for additional replacement test capsules in the program.

Each of three capsules contain the following specimens:

Material	No. 1 Charpy	No. 2 Tensile	No. 3 WOL
Shell Forging No. 1 (High NDT)	12	4	4
Shell Forging No. 2	12	3	3
Weld Metal	8	2	2
HAZ	8	-	-
ASTM Reference	8	-	-

Dosimeters:

- Pure Cu
- Pure Fe
- Pure Ni
- CoAl (0.15% Co)

- CoAl (Cadmium Shielded)
- U-238 (Cadmium Shielded)
- Np-237 (Cadmium Shielded)

Thermal Monitors:

- 97.5 Pb, 2.5 Ag (579°F MP) (MP = Melting Point)
- 97.5 Pb, 1.75 Ag, 0.75 Sn (590°F MP)

Each of three additional capsules contain the following specimens:

Material	No. 4 Charpy	No. 5 Tensile	No. 6 WOL
Shell Forging No. 1 (High NDT)	12	5	5
Shell Forging No. 2	12	4	4
Weld Metal	8	2	2
HAZ	8	-	-
ASTM Reference	8	-	-

Dosimeters:

- Pure Cu
- Pure Fe
- Pure Ni
- CoAl (0.15% Co)
- CoAl (Cadmium shielded)
- U-238 (Cadmium shielded)
- Np-237 (Cadmium shielded)

Thermal Monitors:

- 97.5 Pb, 2.5 Ag (579°F MP)
- 97.5 Pb, 1.75 Ag, 0.75 Sn (590°F MP)

Irradiation of the specimens is higher than the irradiation of the adjacent vessel wall because they are closer to the core than the vessel itself. Since these specimens experience higher

irradiation and are actual samples from the materials used in the vessel, the NDT measurements are representative of the vessel at a later time in life. Data from fracture toughness samples (WOL) provide additional information for use in determining allowable stresses for irradiated material.

The originally calculated maximum fast neutron exposure (nvt) at the vessel wall was 4.4E+19 nvt > 1Mev. Reference 1, Reference 2, Reference 3, Reference 4, Reference 8, Reference 12 and Reference 16 have subsequently updated the calculations for the end of life neutron fluence at the vessel wall. The conservatively estimated fluence for forty years of operation at approximately 95 percent capacity factor is 3.34E19 n/cm². At an uprated power level of 1772 MWt, the calculated fluence for 40 years of operation is 4.36E19n/cm^2. The reactor vessel surveillance capsules are located at 13°, 23°, and 33° as shown in Figure 4.4-2. The original lead factors for the capsules and the adjacent vessel wall, and the vessel maximum are listed below:

Capsules at	Lead Adjacent Vessel Wall by a Multiplying Factor of:	Lead Vessel Maximum by a Multiplying Factor of:
13°	3.6	3.3
23°	3.3	1.7
33°	3.3	1.9

The updated lead factors are presented in Table 4.4-2. Correlations between the original calculations and the measurements of irradiated samples from other reactors, assuming the same neutron spectrum at the samples and the vessel inner wall, are described in Appendix 4A of the original FSAR and have indicated good agreement. The calculation of the integrated flux at the vessel wall is conservative by up to 20 percent.

The anticipated degree to which the specimens will perturb the fast neutron flux and energy distribution will be considered in the evaluation of the surveillance specimen data. Verification and possible readjustment of the calculated wall exposure will be made by use of data on all capsules withdrawn.

The schedule for removal of capsules is presented in Table 4.4-2.

Capsule 1, designated as Capsule V, was removed with the replacement of the first region of core and the results are reported in Reference 1.

Capsule 2, designated as Capsule R, was removed at the end of five years and the results are reported in Reference 2.

Capsule 3, designated as Capsule P, was removed at the end of fourteen years and the results are reported in Reference 4.

The capsule designated as S was removed in 1994 at the end of nineteen operating cycles, and the results are reported in Reference 12. One capsule remains in the vessel (N). The capsule designated as T was removed in 2004 at the end of operating cycle twenty-six and the results are pending.

The results show that the fluence measurements compare very closely with the calculated values. The results of Charpy impact tests indicate that radiation damage has not saturated. The end-of-life projected measured fast neutron fluences for the reactor vessel, based on 32 full-power years of operation at 1650 Mw, agree favorably with calculated values. Neutron fluence values were recalculated for the power uprate to 1772 MWt. The new neutron fluence values are contained in Reference 16.

Table 4.4-1 summarizes the pre-service and fabrication inspections performed on Reactor Coolant System Components. In addition to the inspections shown in Table 4.4-1, there are those which the equipment supplier performs to confirm the adequacy of material he received and those performed by the material manufacturer in producing the basic material. The inspections of reactor vessel, pressurizer, and steam generator were governed by ASME code requirements. The inspection procedures and acceptance standards required on pipe materials and piping fabrication are governed by USAS B31.1 and Westinghouse requirements and are equivalent to those performed on ASME coded vessels. During RFO 28 Gas Sample tubing from the PRT (Penetration # 1) located between containment and the shield building was analyzed to ASME Section III, reference Table B.7-6.

Procedures for performing the examinations were consistent with those established in the ASME Code Section III and were reviewed by qualified engineers. These procedures have been developed to provide the highest assurance of quality material and fabrication. They consider not only the size of the flaws, but equally as important, how the material is fabricated, the orientation and type of possible flaws, and the areas of most severe service conditions. In addition, the accessible external surfaces of the RCS pressure-containing segments received a 100 percent surface inspection by Magnetic Particle or Liquid Penetrant Testing after hydrostatic test (See Table 4.4-1). All reactor vessel plate material was subjected to angle beam as well as straight beam ultrasonic testing to give maximum assurance of quality. All reactor vessel forgings received the same inspection. In addition, 100 percent of the material volume was covered in these tests as an added assurance over the grid basis required in Section III of the B&PV Code.

Quality Control engineers of Wisconsin Public Service Corporation, Pioneer, and Westinghouse monitored the supplier's work, witnessing key inspections not only in the supplier's shop but in the shops of sub-vendors of the major forgings and plate material. Normal surveillance

included verification of records of material, physical and chemical properties, review of radiographs, performance of required tests, and qualification of supplier personnel.

Wisconsin Public Service Corporation, using Pioneer Service and Engineering and others as consultants, reviewed the quality control methods and results of vendors and had found them to be satisfactory.

Equipment specification for fabrication required that suppliers submit the manufacturing procedures (welding, heat treating, etc.) which were reviewed by qualified Westinghouse engineers. Field fabrication procedures were also reviewed to assure that installation field welds were of equal quality.

Section III of the ASME Code requires that nozzles carrying significant external loads are attached to the shell by full penetration welds. This requirement was carried out in the reactor coolant piping, where all auxiliary pipe connections to the reactor coolant loop were made using full penetration welds.

The RCS components were welded under procedures, which required the use of both pre-heat and post-heat. Preheat requirements, not mandatory under Code rules, were performed on all weldments including P1 and P3 materials which are the materials of construction in the reactor vessel, pressurizer and steam generators. Pre-heat and post-heat of weldments both served a common purpose: the production of tough, ductile metallurgical structures in the completed weldment. Preheating produces tough ductile welds by minimizing the formation of hard zones whereas post-heating achieves this by tempering any hard zones, which may have formed due to rapid cooling.

4.4.1.2 Electroslag Weld Quality Assurance

The 90° elbows and one reactor coolant pump were electroslag welded.

4.4.1.3 Piping Elbows

The following were performed for quality assurance of the welding procedures:

1. The electroslag welding procedure employing one wire technique was qualified in accordance with the requirements of ASME B&PV Code Section IX and Code Case 1355 plus supplementary evaluations as requested by Westinghouse. The following test specimens were removed from a 5-inch thick weldment and successfully tested. They are:

   - 6 Transverse Tensile Bars - as welded
   - 6 Transverse Tensile Bars - 2050°F, H_2O Quench
   - 6 Transverse Tensile Bars - 2050ºF, H_2O Quench + 750°F stress relief heat treatment
   - 6 Transverse Tensile Bars - 2050°F, H_2O Quench, tested at 650°F

- 12 Guided Side Bend Test Bars

2. The casting segments were surface conditioned for 100 percent radiographic and penetrant inspections. The acceptance standards were ASTM-E-186 severity level 2 except no category D or E defectiveness was permitted and USAS Code Case N-10, respectively.
3. The edges of the electroslag weld preparations were machined. These surfaces were penetrant inspected prior to welding. The acceptance standards were USAS Code Case N-10.
4. The completed electroslag weld surfaces were ground flush with the casting surface. Then the electroslag weld and adjacent base material were 100 percent radiographed in accordance with ASME Code Case 1355. Also, the electroslag weld surfaces and adjacent base material were penetrant inspected in accordance with USAS Code Case N-10.
5. Weld metal and base metal chemical and physical analysis were determined and certified.
6. Heat treatment furnace charts were recorded and certified.

4.4.1.4 Reactor Coolant Pump Casings

The electroslag welding procedure employing two- and three-wire techniques was qualified in accordance with the requirements of the ASME B&PV Code Section IX and Code Case 1355 plus supplementary evaluations as requested by W NES-PWRSD. The following test specimens were removed from an 8-inch thick and from a 12-inch thick weldment made from a separate static casting and successfully tested for both the two-wire and three-wire techniques, respectively. They are:

1. Two-wire electroslag process - 8-inch thick weldment.
   - 6 Transverse Tensile Bars - 750°F post weld stress relief
   - 12 Guided Side Bend Test Bars
2. Three-wire electroslag process - 12-inch thick weldment
   - 6 Transverse Tensile Bars - 750°F post weld stress relief
   - 17 Guided Side Bend Test Bars
   - 21 Charpy V-Notch Specimens
   - Full section macroexamination of weld and heat-affected zone
   - Numerous microscopic examinations of specimens removed from the weld and heat-affected zone regions.
   - Hardness survey across weld and heat-affected zone.

3. A separate weld test using the two-wire electroslag technique was performed to evaluate the effects of a stop and restart of welding by this process. This evaluation was performed to establish proper procedures and techniques. The following test specimens were removed from an 8-inch thick weldment in the stop-restart-repaired region and tested. They are:
   - 2 Transverse Tensile Bars - as welded
   - 4 Guided Side Bend Test Bars
   - Full section macro-examination of weld- and heat-affected zone.
4. All of the weld test blocks in (a), (b), and (c) above were radiographed using a 24 Mev Betatron. The radiographic quality level, as defined by ASTM E-94, obtained is between ½ of 1 percent and 1 percent (1-1T). There were no discontinuities evident in any of the electroslag welds.
   - The casting segments were surface conditioned for 100 percent radiographic and penetrant inspections. The radiographic acceptance standards were ASTM E-186 Severity Level 2 except no Category D or E defect was permitted for section thickness up to 4½ inches. The penetrant acceptance standards were ASME B&PV Code Section III, paragraph N-627.
   - The edges of the electroslag weld preparations were machined. These surfaces were penetrant inspected prior to welding. The acceptance standards were ASME B&PV Code Section III, paragraph N-627.
   - The completed electroslag weld surfaces were ground flush with the casting surface. Then the electroslag weld and adjacent base material were 100 percent radiographed in accordance with ASME Code Case 1355. Also, the electroslag weld surfaces and adjacent base material were penetrant tested in accordance with B&PV Code Section III, paragraph N-627.

- Weld metal and base metal chemical and physical analysis were determined and certified.
- Heat treatment furnace charts were recorded and certified.

4.4.1.5 In-Process Control of Variables

There are many variables that must be controlled in order to maintain desired quality welds. These, together with an explanation of their relative importance are as follows:

4.4.1.5.1 Heat Input vs. Output

The heat input is determined by the product of volts times current and they are measured by voltmeters and ammeters, which are considered accurate as they are calibrated every 30 days. During any specific weld, these meters are constantly monitored by the operators.

The ranges specified are 500-620 amperes and 44-50 volts. The amperage variation, even though it is less than ASME allows by Code Case 1355, is necessary for several reasons:

1. The thickness of the weld is in most cases the reason for changes.
2. The weld gap variation during the weld cycle will also require changes. For example, the procedure qualifications provide for welding thicknesses from 5 inches to 11 inches with two wires. The current and voltage are varied to accommodate this range.
3. Also, the weld gap is controlled by spacer blocks. These blocks must be removed as the weld progresses. Each time a spacer block is removed there is the chance of the weld pinching down to as much as 1 inch or opening to perhaps as much as 1½ inches. In either case, a change in current may be necessary.
4. The heat output is controlled by the heat sink of the section thickness and metered water flow through the water-cooled shoes. The nominal temperature of the discharged water is 100°F.

4.4.1.5.2 Weld Gap Configuration

As previously mentioned, the weld gap configuration is controlled by 1¼ inch spacer blocks. As these blocks are removed there is the possibility of gap variation. It has been found that a variation from 1 to 1¾ inches is not detrimental to weld quality as long as the current is adjusted accordingly.

4.4.1.5.3 Flux Chemistry

The flux used for welding is Arcos BV-1 Vertomax. This is a neutral flux whose chemistry is specified by Arcos Corporation. The molten slag is kept at a nominal depth of 1¾ inches and may vary in depth by plus or minus 3/8 inch without affecting the weld. This is measured by a stainless steel dipstick.

4.4.1.5.4 Weld Cross Section Configuration

It is noted that the higher the current or heat input and the lower the heat output that the dilution of weld metal with base metal is greater, causing a more round barrel-shaped configuration as compared to welding with less heat input and higher heat output. This would cut the amount of dilution to provide a more narrow barrel-shaped configuration. This is also a function of section thicknesses; the thinner the section, the more round the pattern that is produced.

4.4.1.5.5 Welder Qualification

Welder qualification in accordance with ASME B&PV Code, Section IX rules is required, using transverse side bend test specimens per Table Q.24.1.

4.4.1.6 In-Service Inspection

The basis of the In-Service Inspection program is Section XI of the ASME Boiler and Pressure Vessel Code, Rules for In-Service Inspection of Nuclear Power Plant Components. The Kewaunee nuclear steam supply system is a pressurized water system supplied by Westinghouse Electric Corporation. The plant was not specifically designed to meet the requirements of Section XI of the Code; therefore, 100 percent compliance may not be feasible or practical. However, access for in-service inspection was considered during the design, and modifications have been made where practical to make provisions for maximum access within the limits of the current plant design.

The In-Service Inspection (ISI) Plan and Schedule is a ten-year program that is prepared in accordance with the latest NRC approved version of the ASME Code edition and addenda. As specified in 10 CFR 50.55a(g)(4)(ii) this ASME Code is the latest version incorporated by reference in 10 CFR 50.55a(b)(2) approved one year prior to the start of the next ten-year interval. For Kewaunee Power Station the fourth ten-year interval 2004-2014, the current applicable edition of ASME Boiler and Pressure Vessel Code is the 1998 Edition 2000 Addenda The KPS 120-month ISI intervals start and end on the anniversary of the initial startup date, June 16, 1974.

At the present time, the most highly developed technique for volumetric inspection of reactor pressure vessel welds is ultrasonic. Both ultrasonic techniques and radiography can be used for volumetric inspection of most of the other components, but ultrasonic techniques is used for the following reasons:

1. The pipe or vessel need not be drained.
2. The inspection can be mechanized, reducing radiation exposure to personnel.
3. Less time is usually required than for radiographic inspection.
4. Radiation levels and component geometry make radiography more difficult and sometimes impossible.
5. Adequate records can be obtained using manual techniques, and reproducible records can be obtained with mechanized techniques.

Kewaunee Power Station has considered problems associated with in-service inspection during design of the plant. These considerations have provided increased access such as at the reactor coolant and safety injection nozzle-to-pipe welds.

Although ultrasonic techniques will be used for most of the volumetric examinations, radiography may be used on piping and other areas where ultrasonic techniques cannot be used.

The method of examinations planned for each area - volumetric, surface, or visual - is shown in the In-Service Inspection Plan and Schedule. Detailed procedures have been prepared

and may be revised prior to the examinations in order to permit incorporation of the latest available techniques.

It should be noted that because of the plant design, certain code requirements may be impractical to implement, therefore certain components and piping have been excluded. For those examinations found to be impractical, relief requests have been generated and submitted to the NRC in accordance with 10 CFR 50.55a(g)(5)(iii). Reference Kewaunee Power Station fourth ten-year Inservice Inspection (ISI) Program 2004-2014.

4.4.1.7 Reactor Building Containment Vessel In-Service Inspection

Federal Register Vol. 61, No. 154 dated August 8, 1996 the NRC amended its regulations to incorporate by reference the 1992 Edition with the 1992 Addenda of Subsection IWE, “Requirements for Class MC and Metallic Liners of Class CC Components of Light-Water Cooled Power Plants” of Section XI, Division 1, of the American Society of Mechanical Engineers Boiler and Pressure Vessel Code (ASME Code) with specified modifications and a limitation. Licensees will be required to incorporate Subsection IWE into their ISI program. For Kewaunee Power Station the current applicable edition of ASME Boiler and Pressure Vessel Code is the 2001 Edition 2003 Addenda for the second ten-year interval 2006-2016.

4.4 References

1. Yanichko, S. E., S. L. Anderson, K. V. Scott, "Analysis of Capsule V From the Wisconsin Public Service Corporation Kewaunee Nuclear Plant Reactor Vessel Radiation Surveillance Program," WCAP-8908 (Nonproprietary), January, 1977
2. Yanichko, S. E., S. L. Anderson, R. P. Shogan, R. G. Lott, "Topical Report - Analysis of Capsule R From the Wisconsin Public Service Corporation Kewaunee Nuclear Plant Reactor Vessel Radiation Surveillance Program," WCAP-9878, EPRI Research Project 1021-3, March, 1981
3. Nair, P. K., and E. B. Norris, "Pressure/Temperature Operating Curves and Assessment of RT_{PTS} Concerns for Kewaunee Nuclear Plant," SwRI Project 06-9819, April 1986. Submitted April 29, 1986 in a letter from C. W. Giesler (WPSC) to H. R. Denton (NRC)
4. Yanichko, S. E., S. L. Anderson, L. Albertin, "Analysis of Capsule P from the Wisconsin Public Service Corporation Kewaunee Nuclear Power Plant Reactor Vessel Radiation Surveillance Program," WCAP-12020, November 1988
5. [Deleted]
6. [Deleted]
7. [Deleted]
8. Letter from K. H. Evers (WPS) to Document Control Desk (NRC) "Pressurized Thermal Shock," Letter No. NRC-89-122, September 19, 1989
9. NRC Safety Evaluation Report, S. A. Varga (NRC) to C. W. Giesler (WPS), Letter No. K-83-186, September 16, 1983
10. [Deleted]
11. [Deleted]
12. "Analyses Of Capsule S From The Wisconsin Public Service Corporation Kewaunee Nuclear Plant Reactor Vessel Radiation Surveillance Program," WCAP-14279, March 1995 (non-proprietary)
13. [Deleted]
14. [Deleted]
15. [Deleted]
16. Power Uprate Project, Kewaunee Nuclear Power Plant, NSSS Engineering Report, WCAP-16039, February 2003

17. Letter from L. Raghaven (NRC) to M. G. Gaffney (KPS) Transmitting NRC SER Relating To The Fourth Ten-Year Interval ISI Program and Associated Relief Requests, Letter No. 05-682, September 23, 2005

Table 4.4-1
Reactor Coolant System Preservice And Fabrication Inspections

Component	RT[1]	UT[1]	PT[1]	MT[1]	ET[1]
1. Steam Generator					
1.1 Tube Sheet					
1.1.1 Forging		yes		yes	
1.1.2 Cladding		yes[a]	yes[b]		
1.2 Channel Head					
1.2.1 Casting	yes			yes	
1.2.2 Cladding			yes		
1.3 Secondary Shell and Head					
1.3.1 Plates		yes			
1.4 Tubes	yes				
1.5 Nozzles (forgings)	yes				
1.6 Weldments					
1.6.1 Shell, longitudinal	yes			yes	
1.6.2 Shell, circumferential	yes			yes	
1.6.3 Cladding (channel head-tube sheet joint cladding restoration)			yes		
1.6.4 Steam and feedwater nozzle to shell	yes			yes	
1.6.5 Support brackets				yes	
1.6.6 Tube-to-tube sheet			yes		
1.6.7 Instrument connections (primary and secondary)				yes	
1.6.8 Temporary attachments after removal				yes	

a. Flat Surfaces Only
b. Weld Deposit Areas Only

Table 4.4-1
Reactor Coolant System Preservice And Fabrication Inspections

Component	RT[1]	UT[1]	PT[1]	MT[1]	ET[1]
1.6.9 After hydrostatic test (all welds and complete channel head-where accessible)				yes	
1.6.10 Nozzle safe ends (weld deposit)		yes	yes		
2. Pressurizer					
2.1 Heads					
2.1.1 Casting	yes			yes	
2.1.2 Cladding			yes		
2.2 Shell					
2.2.1 Plates		yes		yes	
2.3 Heaters					
2.3.1 Tubing[c]		yes	yes		
2.3.2 Centering of element	yes				
2.4 Nozzle		yes	yes		
2.5 Weldments					
2.5.1 Shell, longitudinal	yes			yes	
2.5.2 Shell, circumferential	yes			yes	
2.5.3 Cladding			yes		
2.5.4 Nozzle safe end (forging)	yes		yes		
2.5.5 Instrument connections			yes		
2.5.6 Support skirt				yes	
2.5.7 Temporary attachments after removal				yes	

c. Or a UT and ET

Table 4.4-1
Reactor Coolant System Preservice And Fabrication Inspections

Component	RT[1]	UT[1]	PT[1]	MT[1]	ET[1]
2.5.8 All welds and cast heads after hydrostatic test				yes	
2.6 Final Assembly					
2.6.1 All accessible surfaces after hydrostatic test				yes	
3. Piping					
3.1 Fittings and pipe (castings)	yes		yes		
3.2 Fittings and pipe (forgings)		yes	yes		
3.3 Weldments					
3.3.1 Circumferential	yes		yes		
3.3.2 Nozzle to run pipe (no RT for nozzles less than 3")	yes		yes		
3.3.3 Instrument connections		yes	yes		
4. Pumps					
4.1 Castings	yes		yes		
4.2 Forgings					
4.2.1 Main shaft		yes	yes		
4.2.2 Main studs		yes	yes		
4.2.3 Flywheel (rolled plate)		yes			
4.3 Weldments					
4.3.1 Circumferential	yes		yes		
4.3.2 Instrument connections			yes		
5. Reactor Vessel					
5.1 Forgings					
5.1.1 Flanges		yes		yes	

Table 4.4-1
Reactor Coolant System Preservice And Fabrication Inspections

Component	RT[1]	UT[1]	PT[1]	MT[1]	ET[1]
5.1.2 Studs		yes		yes	
5.1.3 Head adaptors		yes	yes		
5.1.4 Head adaptor tube		yes	yes		
5.1.5 Instrumentation tube		yes	yes		
5.1.6 Main nozzles		yes		yes	
5.1.7 Nozzle safe ends		yes	yes		
5.1.8 Ring forging (if forging is employed)		yes			
5.2 Plates (only for head)					
5.3 Weldments					
5.3.1 Main steams	yes			yes	
5.3.2 CRD head adaptor connection			yes		
5.3.3 Instrumentation tube connection			yes		
5.3.4 Main nozzles	yes			yes	
5.3.5 Cladding		yes[d]	yes		
5.3.6 Nozzle-safe ends	yes		yes		
5.3.7 Head adaptor forging to head adaptor tube	yes		yes		
5.3.8 All major welds after hydrotest		yes		yes	
6. Valves					
6.1 Castings	yes		yes		
6.2 Forgings (no UT for valves 2" and smaller)		yes	yes		

d. UT of Clad Bond-to-Base Metal
1. RT-Radiographic, UT-Ultrasonic, PT-Dye Penetrant, MT-Magnetic Particle, ET-Eddy Current

Table 4.4-2
Surveillance Capsule Withdrawal Schedule

Capsule	Location	Lead Factor	Removal Time (EFPY) (a)	Fluence (n/cm², E>1.0 MEV)
V	77°	3.03	1.3	5.86×10^{18}
R	257°	3.03	4.6	1.76×10^{19}
P	247°	2.00	11.1	2.61×10^{19}
S	57°	2.08	16.2	3.67×10^{19}
T	67°	2.13	24.8	5.63×10^{19}
N	237°	2.18	Standby	---

(a) Effective Full Power Years (EFPY) from plant startup.

Figure 4.4-1 Surveillance Capsule Elevation View

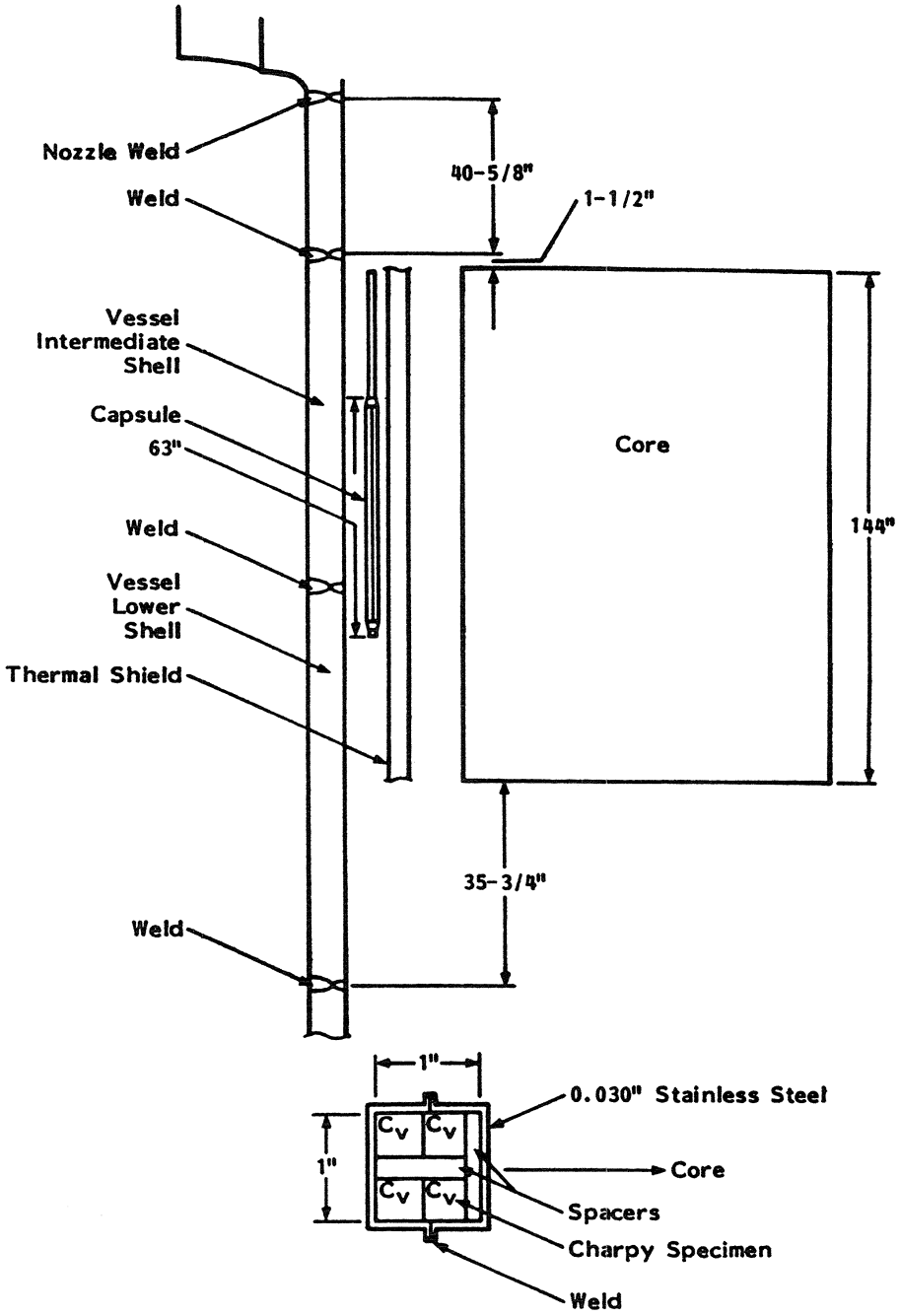
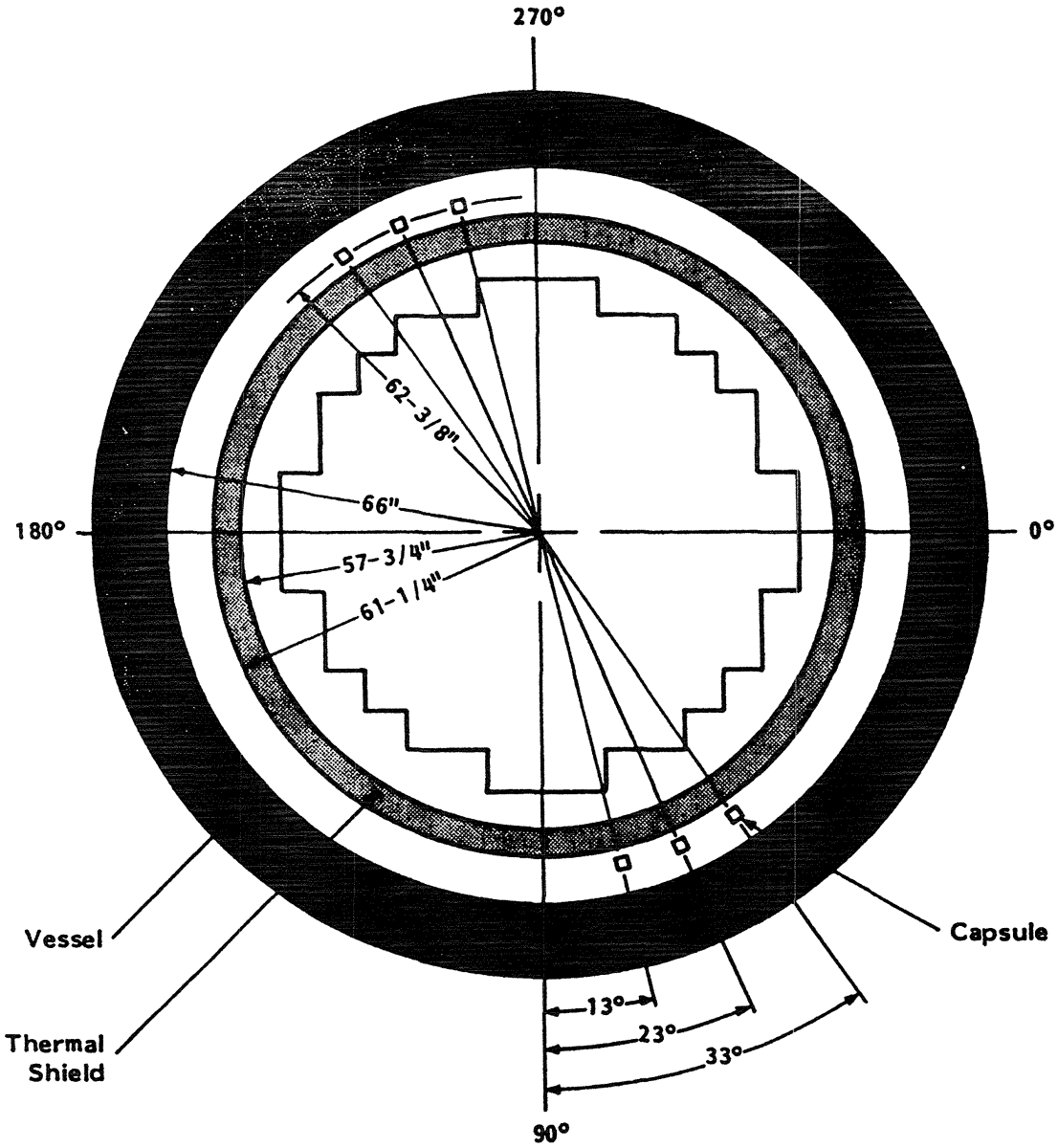
Figure 4.4-2 Surveillance Capsule Plan View