INDIANA MICHIGAN POWER®
A unit of American Electric Power

Indiana Michigan Power
Cook Nuclear Plant
One Cook Place
Bridgman, MI 49106
AEP.com

March 30, 2007

AEP:NRC:7691-01

Docket Nos.: 50-315
50-316

U. S. Nuclear Regulatory Commission
ATTN: Document Control Desk
Mail Stop O-P1-17
Washington, DC 20555-0001

Donald C. Cook Nuclear Plant Units 1 and 2
ANNUAL RADIOACTIVE EFFLUENT RELEASE REPORT
JANUARY 1, 2006, THROUGH DECEMBER 31, 2006

In accordance with Technical Specification 5.6.3, Indiana Michigan Power Company hereby submits the Annual Radioactive Effluent Release Report for Donald C. Cook Nuclear Plant (CNP). This report covers the period January 1, 2006, through December 31, 2006.

The calculations in this report were performed in accordance with the CNP Offsite Dose Calculation Manual (ODCM). There have been two revisions made to the ODCM during this reporting period.

This letter contains no new commitments. Should you have any questions, please contact Ms. Susan D. Simpson, Regulatory Affairs Manager, at (269) 466-2428.

Sincerely,

Joseph N. Jensen
Site Vice President

RSP/rdw

Attachment

IE48
A009

c: J. L. Caldwell, NRC Region III
K. D. Curry, AEP Ft. Wayne, w/o attachment
J. T. King, MPSC, w/o attachment
MDEQ – WHMD/RPMWS, w/o attachment
NRC Resident Inspector
P. S. Tam, NRC Washington, DC

ATTACHMENT TO AEP:NRC:7691-01

DONALD C. COOK NUCLEAR PLANT UNITS 1 AND 2
ANNUAL RADIOACTIVE EFFLUENT RELEASE REPORT
JANUARY 1, 2006, THROUGH DECEMBER 31, 2006

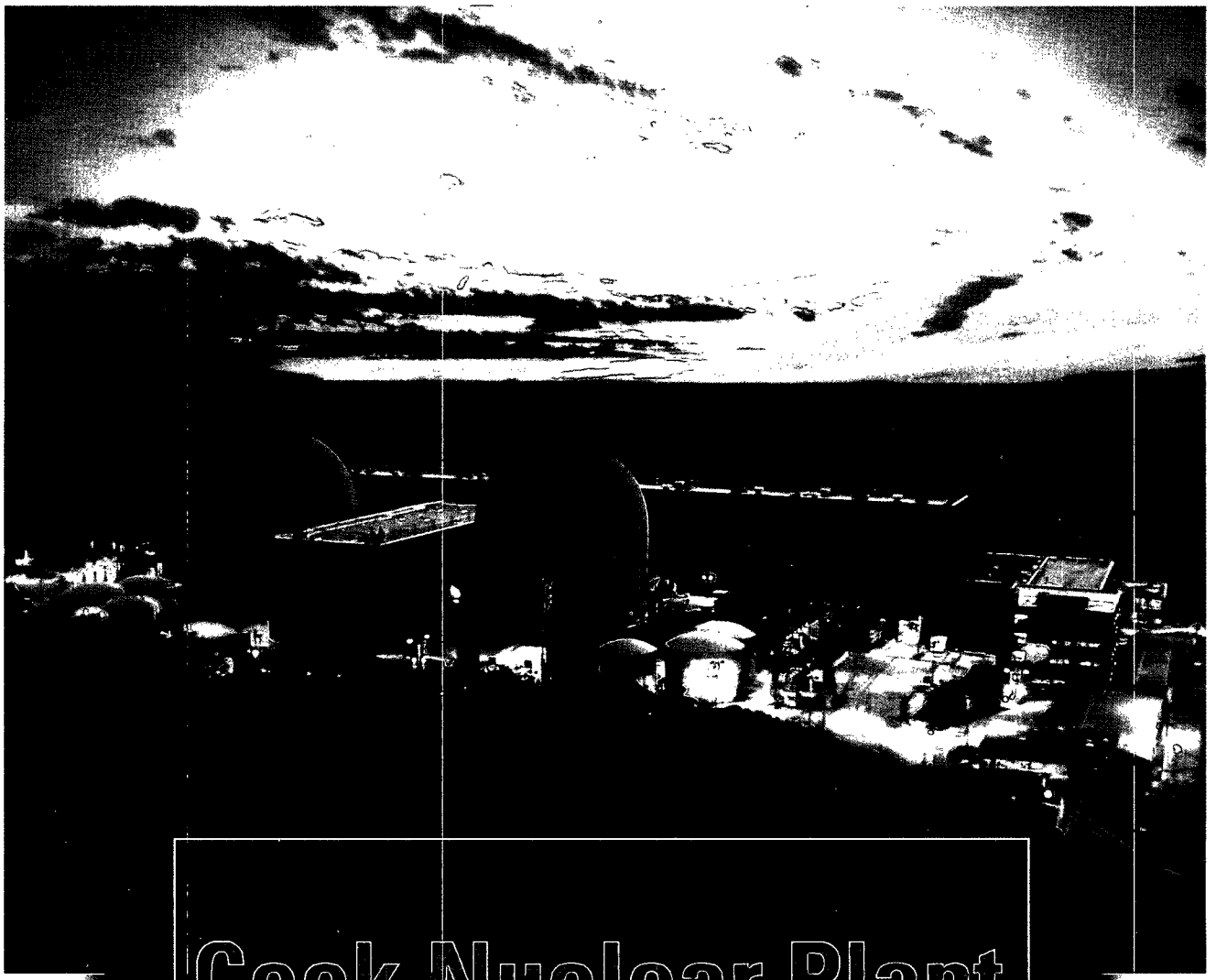

Cook Nuclear Plant
Nuclear Generation Group

Annual Radioactive Effluent Release Report

January 1, 2006 through December 31, 2006

AMERICAN® ELECTRIC POWER

AEP: America's Energy Partner™

TABLE OF CONTENTS

		Page
Table of Contents		i
I.	Introduction	1
II.	Radioactive Releases and Radiological Impact on Man	1
	Liquid Releases	2
	Gaseous Releases	2
	Solid Waste Disposition	2
III.	Meteorological	2
IV.	Offsite Dose Calculation Manual (ODCM) Changes	3
V.	Total Dose	3
VI.	Radiation Monitors Inoperable Greater Than 30 Days	3
VII.	Conclusion	3

LIST OF APPENDICES

Appendix	Title
A1.1	2006 Effluent and Waste Disposal Annual Report – Supplemental Information
A1.2	Summary of Maximum Individual Doses: First Quarter, Second Quarter, Third Quarter and Fourth Quarter 2006
A2.1	Hours at Each Wind Speed and Direction: First Quarter, 2006
A2.2	Hours at Each Wind Speed and Direction: Second Quarter, 2006
A2.3	Hours at Each Wind Speed and Direction: Third Quarter, 2006
A2.4	Hours at Each Wind Speed and Direction: Fourth Quarter, 2006
A3.0	Offsite Dose Calculation Manual (ODCM) Changes

I. INTRODUCTION

This report discusses the radioactive discharges from Unit 1 and Unit 2 of the Donald C. Cook Nuclear Plant (CNP) during 2006. This is in accordance with the requirements of CNP Technical Specification 5.6.3.

The table below summarizes the pertinent statistics concerning the Plant's operation during the period from January 1, 2006, to December 31, 2006. The data in this table and the descriptive information on plant operation are based upon the respective Unit's Monthly Operating Reports, Performance Indicators and Control Room Logs for 2006.

Parameter	Unit 1	Unit 2
Gross Electrical Energy Generation (Megawatt Hour (MWH))	7,551,146	8,664,097
Unit Service Factor (Percent (%))	82.8	88.3
Unit Capacity Factor (Maximum Dependable Capacity (MDC)) Net (%)	82.0	88.9

Unit 1 entered the reporting period in Mode 1 at Nominal Full Power (NFP). Small power adjustments were made to facilitate main turbine valve testing throughout the year. The unit experienced a Technical Specification shutdown on July 30, 2006, due to high Containment temperature. The unit attained criticality on August 2, 2006, and returned to NFP on August 3, 2006. The unit commenced end of cycle coast down load reduction on August 18, 2006, and entered scheduled U1C21 refueling outage on September 16, 2006. The unit attained criticality on November 10, 2006, and attained NFP on November 11, 2006. The unit exited the reporting period at NFP.

Unit 2 entered the reporting period in Mode 1 at NFP. Small power adjustments were made to facilitate main turbine valve testing throughout the year. The unit entered scheduled U2C16 refueling outage on March 25, 2006. The unit attained criticality on May 6, 2006, and attained NFP on May 10, 2006. Power was reduced to 80% on September 1, 2006, to allow for repairs of A-North Main Condenser waterbox. Repairs were completed and the unit returned to NFP on September 3, 2006. The unit exited the reporting period at NFP.

II. RADIOACTIVE RELEASES AND RADIOLOGICAL IMPACT ON MAN

Since a number of release points are common to both units, the release data from both units are combined to form this two-unit, Annual Radioactive Effluent Release Report. Appendix A1.1 through A2.4 of this report present the information in accordance with Section 5.6.3 of Appendix A to the Facility Operating Licenses, as specified in the Technical Specifications, Regulatory Guide 1.21 and 10 CFR Part 50, Appendix I.

The "MIDAS System" is a computer code that calculates doses due to radionuclides that were released from the CNP.

All liquid and gaseous releases were well within Offsite Dose Calculation Manual (ODCM) limits and Federal Limits.

There were no abnormal liquid or gaseous releases.

Liquid Releases

During 2006 there were 64 liquid batch releases performed. During the first quarter there were 15 liquid batch releases. During the second quarter there were 16. During the third quarter there were 16. During the fourth quarter there were 17.

Estimated doses (in millirem) to maximally exposed individuals via the liquid release pathways are given in Appendix A1.2 of this report.

Gaseous Releases

During the first quarter of 2006 there were two batch releases from Waste Gas Decay Tanks (GDT), one Containment Purge release, and 69 Containment Pressure Reliefs (CPR). During the second quarter there were five batch releases from GDTs, two containment purges, and 63 CPR. During the third quarter there were four batch releases from GDT, three containment purges, and 61 CPR. During the fourth quarter there was one batch release from Unit 1 containment purge and 67 CPR. CPR continue to be listed as batch releases as described in Nuclear Regulatory Commission Inspections 50-315/89016 (DRSS) and 50-316/89017 (DRSS). Doses continue to be calculated utilizing continuous criteria as allowed by NUREG-0133. There were a total of 11 GDT, seven containment purges and 260 CPR gaseous batch releases made during 2006.

In calculating the dose consequences for continuous and batch gaseous releases during 2006, the meteorological data measured at the time of the release were used.

The estimated doses (in millirem) to maximally exposed individuals via the gaseous release pathways are given in Appendix A1.2 of this report. For individuals that are within the site boundary, the occupancy time is sufficiently low to compensate for any increase in the atmospheric diffusion factor above that for the site boundary.

Solid Waste Disposition

There were 64 shipments of radioactive waste made during 2006. This included shipments made from the site and the various radioactive waste processors to the ultimate disposal site.

III. METEOROLOGICAL

Appendices A2.1, A2.2, A2.3, and A2.4 of this report contain the cumulative joint frequency distribution tables of wind speed and wind direction, corresponding to the various atmospheric stability classes for the first, second, third and fourth quarters of 2006. Hourly meteorological data is available for review and/or inspection upon request.

IV. OFFSITE DOSE CALCULATION MANUAL (ODCM) CHANGES

The Offsite Dose Calculation Manual, PMP-6010-OSD-001, was revised during the report period. Copies of Revisions 20 and 21 are included as part of the report.

V. TOTAL DOSE

Section 3.2.5 of the ODCM requires that the dose or dose commitment to a real individual from all uranium fuel cycle sources in Berrien County be limited to no more than 25 millirem to the total body or any organ (except the thyroid, which is limited to no more than 75 millirem) over a period of 12 consecutive months to show conformance with the requirements of 40 CFR Part 190. The maximum cumulative dose to an individual from liquid and gaseous effluents during 2006 was well within the ODCM limits. Measurements using thermoluminescent dosimeters (TLD) at 11 offsite stations indicate that the dose due to direct radiation is consistent with preoperational and current control (background) levels. This is fully evaluated in the Annual Radiological Environmental Operating Report.

The annual dose to the maximum individual will be estimated by first, summing the quarterly total body air dose, the quarterly skin air dose, the quarterly critical organ dose from iodines and particulates (I&P), the quarterly total body dose from liquid effluents, the quarterly critical organ dose from liquid effluents, and the Radiological Environmental Monitoring Program onsite direct radiation TLD data. These quarterly values will be summed and compared to the annual limit. The table that follows here represents the above verbal description:

Dose	1st Quarter	2nd Quarter	3rd Quarter	4th Quarter
Total Body or any organ (I&P)	2.22E-02	7.39E-02	1.03E-01	7.15E-02
Total Body (Air)	2.90E-04	1.50E-04	1.80E-03	3.40E-04
Skin (Air)	6.30E-04	5.90E-04	3.70E-02	5.60E-04
Total Body (liquid)	5.27E-03	8.82E-03	5.08E-03	6.87E-03
Maximum organ (liquid)	5.38E-03	8.86E-03	5.09E-03	6.99E-03
Direct Radiation	0.00E+00	0.00E+00	0.00E+00	0.00E+00
Total	3.38E-02	9.23E-02	1.52E-01	8.63E-02
Cumulative Total Dose (Total Body or any other organ) mrem				3.64E-01
Annual Dose Limit (mrem)				2.50E+01
Percent of Limit				1.46E+00

VI. RADIATION MONITORS INOPERABLE GREATER THAN 30 DAYS

There were no radiation monitors inoperable for greater than 30 days while there was a release via that pathway.

VII. CONCLUSION

Based on the information presented in this report, it is concluded that the CNP Units 1 and 2 performed their intended design function with no demonstrable adverse affect on the health and safety of the general public.

SUPPLEMENTAL INFORMATION

Facility: Donald C. Cook Nuclear Plant
Licensee: Indiana Michigan Power Company

1 REGULATORY LIMITS

1.1 Noble Gases

The air dose in unrestricted areas due to noble gases released in gaseous effluents shall be limited to the following:

1.1.1 During any calendar quarter, to ≤ 5 mrad for gamma radiation and ≤ 10 mrad for beta radiation.

1.1.2 During any calendar year, to ≤ 10 mrad for gamma radiation and ≤ 20 mrad for beta radiation.

1.2 Iodines - Particulates

The dose to a member of the public from radioiodines, radioactive materials in particulate form, and radionuclides other than noble gases with half-lives greater than eight days in gaseous effluents released to unrestricted areas shall be limited to the following:

1.2.1 During any calendar quarter to ≤ 7.5 mrem to any organ.

1.2.2 During any calendar year to ≤ 15 mrem to any organ.

1.3 Liquid Effluents

The dose or dose commitment to an individual from radioactive material in liquid effluents released to unrestricted areas shall be limited:

1.3.1 During any calendar quarter to ≤ 1.5 mrem to the total body and to ≤ 5 mrem to any organ.

1.3.2 During any calendar year to ≤ 3 mrem to the total body and to ≤ 10 mrem to any organ.

1.4 Total Dose

The dose or dose commitment to a real individual from all uranium fuel cycle sources is limited to ≤ 25 mrem to the total body or any organ (except the thyroid, which is limited to ≤ 75 mrem) over a period of 12 consecutive months.

2 MAXIMUM PERMISSIBLE CONCENTRATIONS

2.1 Gaseous Effluents

The dose rate due to radioactive materials released in gaseous effluents from the site shall be limited to the following:

2.1.1 For noble gases: ≤ 500 mrem/yr to the total body and ≤ 3000 mrem/yr to the skin.

2.1.2 For all radioiodines and for all radioactive materials in particulate form and radionuclides (other than noble gases) with half-lives greater than eight days: ≤ 1500 mrem/yr to any organ.

The above limits are provided to insure that radioactive material discharged in gaseous effluents will not result in the exposure of an individual in an unrestricted area to annual average concentrations exceeding the limits in 10 CFR Part 20, Appendix B, Table 2, Column 1.

2.2 Liquid Effluents

The concentration of radioactive material released at any time from the site to unrestricted areas shall be limited to the concentrations specified in 10 CFR Part 20, Appendix B, Table 2, Column 2, for radionuclides other than dissolved or entrained noble gases. For dissolved or entrained noble gases, the concentration shall be limited to 2×10^{-4} μCi/ml total activity.

3 AVERAGE ENERGY

The average energy ($\bar{E}$) of the radionuclide mixture in releases of fission and activation gases as defined in Regulatory Guide 1.21, Appendix B, Section A.3 is not applicable because the limits used for gaseous releases are based on calculated dose to members of the public. Release rates are calculated using an isotopic mix from actual samples rather than average energy.

4 MEASUREMENTS and APPROXIMATIONS of TOTAL RADIOACTIVITY

4.1 Fission and Activation Gases

Sampled and analyzed on a 4096 channel analyzer and HpGe detector. Tritium analysis is performed using liquid scintillation counter.

4.2 Iodines

Sampled on iodine adsorbing media and analyzed on a 4096 channel analyzer and HpGe detector.

4.3 Particulates

Sampled on a glass filter and analyzed on a 4096 channel analyzer and HpGe detector. Sr-89 and Sr-90 analyses performed by offsite vendor.

4.4 Liquid Effluents

Sampled and analyzed on a 4096 channel analyzer and HpGe detector. Tritium analysis is performed using liquid scintillation counter. Fe-55, Sr-89 and Sr-90 analyses performed by offsite vendor. Ni-63 is also currently being analyzed by the offsite vendor in response to evaluation of the 10 CFR 61 sample results.

5 BATCH RELEASES

5.1 Liquid

5.1.1 Number of batch releases:

15 releases in the 1st quarter, 2006
16 releases in the 2nd quarter, 2006
16 releases in the 3rd quarter, 2006
17 releases in the 4th quarter, 2006

5.1.2 Total time period for batch releases:

10,341 minutes

5.1.3 Maximum time for a batch release:

231 minutes

5.1.4 Average time period for batch release:

162 minutes

5.1.5 Minimum time period for a batch release:

121 minutes

5.1.6 Average stream flow during periods of release of effluent into a flowing stream:

7.77E+5 gpm circulating water

5.2 Gaseous

5.2.1 Number of batch releases:

72 releases in the 1st quarter, 2006
70 releases in the 2nd quarter, 2006
68 releases in the 3rd quarter, 2006
68 releases in the 4th quarter, 2006

5.2.2 Total time period for batch releases:

15,909 minutes

5.2.3 Maximum time for a batch release:

2,053 minutes

5.2.4 Average time period for batch release:

57.2 minutes

5.2.5 Minimum time period for a batch release:

5 minutes

6 ABNORMAL RELEASES

6.1 Liquid

6.1.1 Number of Releases:

1st Quarter	2nd Quarter	3rd Quarter	4th Quarter
0	0	0	0

6.1.2 Total activity released (Ci):

1st Quarter	2nd Quarter	3rd Quarter	4th Quarter
0	0	0	0

6.2 Gaseous

6.2.1 Number of Releases:

1st Quarter	2nd Quarter	3rd Quarter	4th Quarter
0	0	0	0

6.2.2 Total activity released (Ci):

1st Quarter	2nd Quarter	3rd Quarter	4th Quarter
0	0	0	0

2006 EFFLUENT AND WASTE DISPOSAL ANNUAL REPORT
GASEOUS EFFLUENTS-GROUND LEVEL RELEASES

CONTINUOUS MODE

Nuclides Released	Unit	1st Quarter	2nd Quarter	3rd Quarter	4th Quarter
1. FISSION GASES					
H3	Ci	3.97E+01	8.23E+01	6.34E+01	9.12E+01
AR41	Ci	6.46E-02	--------	--------	--------
KR85	Ci	--------	--------	3.97E+01	--------
XE131m	Ci	--------	--------	5.55E-02	--------
XE133m	Ci	--------	--------	4.30E-02	--------
XE133	Ci	1.66E-01	4.70E-02	4.84E+00	--------
XE135	Ci	--------	--------	1.27E-02	--------
Total for Period	Ci	3.99E+01	8.23E+01	1.08E+02	9.12E+01

Nuclides Released	Unit	1st Quarter	2nd Quarter	3rd Quarter	4th Quarter
2. IODINES					
I131	Ci	--------	3.19E-07	7.22E-05	4.91E-04
I132	Ci	--------	--------	4.10E-07	1.02E-04
I133	Ci	--------	--------	8.95E-06	--------
Total for Period	Ci	--------	3.19E-07	8.16E-05	5.93E-04

3. PARTICULATES					
MN54	Ci	3.75E-08	--------	--------	--------
CO58	Ci	1.81E-08	--------	--------	--------
CO60	Ci	3.73E-07	--------	--------	--------
AG110m	Ci	1.38E-08	--------	--------	--------
CS134	Ci	7.85E-08	--------	--------	--------
CS137	Ci	1.56E-05	--------	1.48E-07	--------
Total for Period	Ci	1.61E-05	--------	1.48E-07	--------

* DENOTES SUPPLEMENTAL ISOTOPES

2006 EFFLUENT AND WASTE DISPOSAL ANNUAL REPORT
GASEOUS EFFLUENTS-GROUND LEVEL RELEASES

BATCH MODE

Nuclides Released	Unit	1st Quarter	2nd Quarter	3rd Quarter	4th Quarter
1. FISSION GASES					
H3	Ci	1.29E-01	4.00E-01	5.95E-01	4.50E-02
AR41	Ci	1.22E-01	5.67E-02	2.05E-01	2.11E-01
KR85	Ci	1.52E+00	1.30E+00	2.22E+00	--------
XE131M	Ci	6.55E-03	1.19E-03	--------	--------
XE133M	Ci	2.68E-03	1.72E-03	--------	--------
XE133	Ci	8.50E-01	4.11E-01	6.84E-01	6.78E-02
XE135	Ci	5.25E-03	1.55E-03	3.91E-03	1.32E-03
Total for Period	Ci	2.64E+00	2.17E+00	3.71E+00	3.25E-01
2. IODINES					
I131	Ci	--------	--------	1.72E-06	3.54E-05
Total for Period	Ci	--------	--------	1.72E-06	3.54E-05
3. PARTICULATES					
CO60	Ci	--------	--------	--------	9.72E-06
Total for Period	Ci	--------	--------	--------	9.72E-06

2006 EFFLUENT AND WASTE DISPOSAL ANNUAL REPORT
GASEOUS EFFLUENTS-SUMMATION OF ALL RELEASES

		Units	1st Quarter	2nd Quarter	3rd Quarter	4th Quarter	Est. Total Error,%
A.	FISSION AND ACTIVATION GASES						
1.	Total Release	Ci	2.74E+00	1.82E+00	4.78E+01	2.80E-01	30.7
2.	Average release rate for period	uCi/sec	3.52E-01	2.31E-01	6.01E+00	3.52E-02	
3.	Percent of applicable limit*	% Gamma	2.40E-02	5.24E-03	6.38E-02	1.13E-02	
		Beta	1.10E-02	8.91E-03	5.33E-01	2.24E-03	
B.	IODINES						
1.	Total I-131	Ci	0.00E+00	3.19E-07	7.39E-05	5.26E-04	11.9
2.	Average release rate for period	uCi/sec	0.00E+00	4.06E-08	9.30E-06	6.62E-05	
3.	Percent of applicable limit*	%	0.00E+00	9.85E-01	1.37E+00	9.53E-01	
C.	PARTICULATES						
1.	Particulates with half lives>8 days	Ci	1.61E-05	0.00E+00	1.48E-07	9.72E-06	11.3
2.	Average release rate for period	uCi/sec	2.07E-06	0.00E+00	1.86E-08	1.22E-06	
3.	Percent of applicable limit*	%	2.95E-01	0.00E+00	1.37E+00	9.53E-01	
4.	Gross alpha radioactivity	Ci	<1.13E-06	<1.02E-06	<1.04E-06	<8.69E-07	
D.	TRITIUM						
1.	Total Release	Ci	3.99E+01	8.29E+01	6.40E+01	9.11E+01	10.6
2.	Average release rate for period	uCi/sec	5.13E+00	1.05E+01	8.05E+00	1.15E+01	
3.	Percent of applicable limit*	%	2.95E-01	9.85E-01	1.37E+00	9.53E-01	

* Applicable limits are expressed in terms of dose. See Appendices A1.2-1 through A1.2-4

2006 EFFLUENT AND WASTE DISPOSAL ANNUAL REPORT
LIQUID EFFLUENTS
CONTINUOUS MODE

Nuclides Released	Unit	1st Quarter	2nd Quarter	3rd Quarter	4th Quarter
H3	Ci	3.17E-01	1.78E-01	5.54E-02	--------

BATCH MODE

Nuclides Released	Unit	1st Quarter	2nd Quarter	3rd Quarter	4th Quarter
H3	Ci	1.64E+02	3.30E+02	2.31E+02	2.80E+02
CR51	Ci	--------	3.41E-04	9.57E-05	2.11E-04
MN54	Ci	5.72E-06	4.93E-06	9.97E-06	2.95E-05
FE55	Ci	--------	--------	5.90E-04	1.08E-05
FE59	Ci	--------	--------	1.08E-05	6.26E-06
CO57	Ci	4.82E-06	--------	1.79E-06	4.15E-05
CO58	Ci	1.93E-04	8.01E-04	1.88E-03	1.24E-02
CO60	Ci	1.58E-04	2.42E-04	1.77E-04	5.71E-04
NI63	Ci	--------	4.19E-04	3.38E-04	5.96E-06
ZN65	Ci	--------	--------	--------	2.95E-05
ZR95	Ci	--------	2.55E-06	2.35E-06	3.67E-06
NB95	Ci	--------	3.66E-06	8.16E-06	1.28E-05
AG110M	Ci	1.02E-05	2.48E-04	1.72E-05	5.09E-05
SB124	Ci	--------	4.59E-06	2.14E-06	2.91E-05
SB125	Ci	4.26E-05	4.14E-05	7.41E-05	3.72E-04
I131	Ci	--------	--------	4.16E-06	--------
CS134	Ci	1.87E-05	--------	2.07E-06	2.81E-05
CS137	Ci	2.06E-05	1.84E-05	2.72E-06	3.36E-05
*XE133	Ci	--------	5.84E-06	--------	7.00E-06
*XE133m	Ci	--------	--------	--------	1.44E-05

* DENOTES SUPPLEMENTAL ISOTOPES

2006 EFFLUENT AND WASTE DISPOSAL ANNUAL REPORT
LIQUID EFFLUENTS-SUMMATION OF ALL RELEASES
BATCH MODE

		Units	1st Quarter	2nd Quarter	3rd Quarter	4th Quarter	Est. Total Error,%
A.	FISSION AND ACTIVATION PRODUCTS						
1.	Total Release	Ci	4.54E-04	2.13E-03	3.21E-03	1.38E-02	12.6
2.	Average diluted concentration during period	uCi/ml	7.34E-11	2.94E-10	3.75E-10	1.63E-09	
3.	Percent of applicable limit	%	1.73E-03	2.60E-03	2.09E-03	1.07E-02	
B.	TRITIUM						
1.	Total Release	Ci	1.64E+02	3.30E+02	2.31E+02	2.80E+02	10.1
2.	Average diluted concentration during period	uCi/ml	2.65E-05	4.56E-05	2.70E-05	3.32E-05	
3.	Percent of applicable limit	%	2.65E+00	4.56E+00	2.70E+00	3.32E+00	
C.	DISSOLVED AND ENTRAINED GASES						
1.	Total Release	Ci	0.00E+00	5.84E-06	0.00E+00	2.14E-05	43.5
2.	Average diluted concentration during period	uCi/ml	0.00E+00	8.07E-13	0.00E+00	2.53E-12	
3.	Percent of applicable limit	%	0.00E+00	4.03E-07	0.00E+00	1.27E-06	
D.	GROSS ALPHA RADIOACTIVITY TOTAL RELEASE	Ci	<8.00E-05	<8.24E-05	<8.51E-05	<9.00E-05	N/A
E.	VOLUME OF WASTE RELEASED	Liters	8.77E+05	9.03E+05	9.33E+05	9.87E+05	2.00
F.	VOLUME OF DILUTION WATER USED DURING PERIOD	Liters	6.18E+09	7.24E+09	8.56E+09	8.45E+09	3.48

2006 EFFLUENT AND WASTE DISPOSAL ANNUAL REPORT
LIQUID EFFLUENTS-SUMMATION OF ALL RELEASES
CONTINUOUS MODE

		Units	1st Quarter	2nd Quarter	3rd Quarter	4th Quarter	Est. Total Error,%
A.	FISSION AND ACTIVATION PRODUCTS						
1.	Total Release	Ci	0.00E+00	0.00E+00	0.00E+00	0.00E+00	N/A
2.	Average diluted concentration during period	uCi/ml	0.00E+00	0.00E+00	0.00E+00	0.00E+00	
3.	Percent of applicable limit	%	0.00E+00	0.00E+00	0.00E+00	0.00E+00	
B.	TRITIUM						
1.	Total Release	Ci	3.17E-01	1.78E-01	5.54E-02	0.00E+00	11.3
2.	Average diluted concentration during period	uCi/ml	4.49E-10	2.71E-10	7.12E-11	0.00E+00	
3.	Percent of applicable limit	%	4.49E-05	2.71E-05	7.12E-06	0.00E+00	
C.	DISSOLVED AND ENTRAINED GASES						
1.	Total Release	Ci	0.00E+00	0.00E+00	0.00E+00	0.00E+00	N/A
2.	Average diluted concentration during period	uCi/ml	0.00E+00	0.00E+00	0.00E+00	0.00E+00	
3.	Percent of applicable limit	%	0.00E+00	0.00E+00	0.00E+00	0.00E+00	
D.	GROSS ALPHA RADIOACTIVITY TOTAL RELEASE	Ci	<1.95E-02	<2.35E-02	<2.38E-02	<3.01E-02	N/A
E.	VOLUME OF WASTE RELEASED	Liters	5.29E+07	3.46E+07	2.12E+07	0.00E+00	2.00
F.	VOLUME OF DILUTION WATER USED DURING PERIOD	Liters	7.06E+11	6.56E+11	7.78E+11	0.00E+00	3.48

2006 Effluent and Waste Disposal Annual Report
Solid Waste and Irradiated Fuel Shipments

Solid Waste Shipped Offsite for Burial or Disposal			
1) Type of Waste	Unit	Estimated amount	Estimated Total Error, %
a) Spent resins, filters, sludge, evaporator bottoms, etc.	m^3 Curies	1.24E+01 1.09E+02	1.00E+00 3.75E+00
b) Dry compressible waste, contaminated equipment, etc.	m^3 Curies	1.82E+02 1.08E+01	1.00E+00 6.48E+00
c) Irradiated components, control rods, etc.	m^3 Curies	N/A	N/A
d) Other	m^3 Curies	N/A	N/A

2) Estimate of Principle Radionuclide Composition						
a)	Nb-95	2 %	Ni-63	30 %	Sb-125	3 %
	Cs-137	3 %	Co58	8 %	Nb-95	1 %
	Fe-55	14 %	H-3	10 %		
	Co-60	27 %	Mn-54	2 %		
b)	H-3	51 %	Mn-54	1 %		
	Cs-137	3 %	Ni-63	11 %		
	Co-60	16 %	Fe-55	13 %		
	Co-58	4 %	Sb-125	1 %		

3) Solid Waste Disposition		
No. of Shipments	Mode of Transportation	Destination
10	Truck	Barnwell, SC
54	Truck	Clive, UT

4) Type of Containers used for Shipment: Containers used are excepted packages, Type A, Sea Land, metal boxes, drums and high integrity containers.

5) Solidification Agent: There were no solidifications performed during this report period.

2006 Effluent and Waste Disposal Annual Report Yearly Release Rates

GASES		
Fission and Activation Gases	Total Release	5.26E+01 Curies
	Average Release Rate	1.67E+00 μCi/sec
	% of Applicable Limits*	γ 5.22E-02 % β 2.78E-01 %
Iodines	Total I-131 Release	6.00E-04 Curies
	Average Release Rate	1.90E-05 μCi/sec
	% of Applicable Limit*	1.80E+00 %
Particulates	Total Release	2.60E-05 Curies
	Average Release Rate	8.23E-07 μCi/sec
	% of Applicable Limit*	1.80E+00 %
LIQUIDS		
Fission and Activation Products	Total Release	1.96E-02 Curies
	Average Diluted Concentration	6.44E-10 μCi/ml
	% of Applicable Limits*	Total Body 8.68E-01 % Organ 2.63E-01 %

* Applicable limits are expressed in terms of the annual 10 CFR 50, Appendix I, dose limits.

Site Boundary and Nearest Residence Listing

The following distances were used in the calculation of the maximum individual doses:

Sector	Direction	Boundary (Meters)	Nearest Residence (Meters)
A	N	651	659
B	NNE	617	660
C	NE	789	943
D	ENE	1497	1747
E	E	1274	1716
F	ESE	972	1643
G	SE	629	1640
H	SSE	594	964
J	S	594	997
K	SSW	629	942

Summary of Maximum Individual Doses

First Quarter 2006

EFFLUENT	APPLICABLE ORGAN	ESTIMATED DOSE (mrem)	AGE GROUP	LOCATION DIST DIR (M) (Toward)	% OF APPLICABLE LIMIT	LIMIT (mrem) QTR
Liquid	Total Body	5.27E-03	Child	Receptor 1	3.51E-01	1.5E+0
Liquid	Liver	5.38E-03	Child	Receptor 1	1.08E-01	5.0E+0
Noble Gas	Air Dose (Gamma-mrad)	1.20E-03	Any Age	594 (SSE)	2.40E-02	5.0E+0
Noble Gas	Air dose (Beta-mrad)	1.10E-03	Any Age	594 (SSE)	1.10E-02	1.0E+1
Iodines and Particulates	Liver	2.22E-02	Child	659 (N)	2.96E-01	7.5E+0

Summary of Maximum Individual Doses

Second Quarter 2006

EFFLUENT	APPLICABLE ORGAN	ESTIMATED DOSE (mrem)	AGE GROUP	LOCATION DIST DIR (M) (Toward)	% OF APPLICABLE LIMIT	LIMIT (mrem) QTR
Liquid	Total Body	8.82E-03	Child	Receptor 1	5.88E-01	1.5E+0
Liquid	Liver	8.86E-03	Child	Receptor 1	1.77E-01	5.0E+0
Noble Gas	Air Dose (Gamma-mrad)	2.62E-04	Any Age	651 (N)	5.24E-03	5.0E+0
Noble Gas	Air dose (Beta-mrad)	8.91E-04	Any Age	629 (SE)	8.91E-03	1.0E+1
Iodines and Particulates	Total Body	7.39E-02	Child	659 (N)	9.85E-01	7.5E+0

Summary of Maximum Individual Doses

Third Quarter 2006

EFFLUENT	APPLICABLE ORGAN	ESTIMATED DOSE (mrem)	AGE GROUP	LOCATION DIST DIR (M) (Toward)	% OF APPLICABLE LIMIT	LIMIT (mrem) QTR
Liquid	Total Body	5.08E-03	Child	Receptor 1	3.39E-01	1.5E+0
Liquid	GI-Tract	5.09E-03	Child	Receptor 1	1.02E-01	5.0E+0
Noble Gas	Air Dose (Gamma-mrad)	3.19E-03	Any Age	651 (N)	6.38E-02	5.0E+0
Noble Gas	Air dose (Beta-mrad)	5.33E-02	Any Age	651 (N)	5.33E-01	1.0E+1
Iodines and Particulates	Thyroid	1.03E-01	Child	659 (N)	1.37E+00	7.5E+0

Summary of Maximum Individual Doses

Fourth Quarter 2006

EFFLUENT	APPLICABLE ORGAN	ESTIMATED DOSE (mrem)	AGE GROUP	LOCATION DIST DIR (M) (Toward)	% OF APPLICABLE LIMIT	LIMIT (mrem) QTR
Liquid	Total Body	6.87E-03	Child	Receptor 1	4.58E-01	1.5E+0
Liquid	Liver	6.99E-03	Child	Receptor 1	1.40E-01	5.0E+0
Noble Gas	Air Dose (Gamma-mrad)	5.65E-04	Any Age	651 (N)	1.13E-02	5.0E+0
Noble Gas	Air dose (Beta-mrad)	2.24E-04	Any Age	651 (N)	2.24E-03	1.0E+1
Iodines and Particulates	Thyroid	7.15E-02	Child	1643 (ESE)	9.53E-01	7.5E+0

SITE: AEP COOK

HOURS AT EACH WIND SPEED AND DIRECTION

PERIOD OF RECORD: 1/1/06 - 3/31/06
STABILITY CLASS: A DT/DZ
ELEVATION: SPEED:SP10M DIRECTION:DIR10M LAPSE:DT60M

WIND SPEED (MPH)

WIND DIRECTION	1-4	4-8	8-13	13-19	19-25	>25	TOTAL
N	3	29	9	0	0	0	41
NNE	0	10	0	0	0	0	10
NE	0	14	1	0	0	0	15
ENE	0	8	2	0	0	0	10
E	0	7	2	0	0	0	9
ESE	1	6	2	0	0	0	9
SE	1	18	10	0	0	0	29
SSE	1	14	18	0	0	0	33
S	2	2	14	4	0	0	22
SSW	0	1	4	2	0	0	7
SW	1	11	17	1	0	0	30
WSW	1	15	12	2	0	0	30
W	2	6	7	0	0	0	15
WNW	2	31	14	0	0	0	47
NW	5	25	1	0	0	0	31
NNW	3	59	10	0	0	0	72
TOTAL	22	256	123	9	0	0	410

PERIODS OF CALM(HOURS): 55
VARIABLE DIRECTION: 0
HOURS OF MISSING DATA: 7

SITE: AEP COOK

HOURS AT EACH WIND SPEED AND DIRECTION

PERIOD OF RECORD: 1/1/06 - 3/31/06
STABILITY CLASS: B DT/DZ
ELEVATION: SPEED:SP10M DIRECTION:DIR10M LAPSE:DT60M

WIND SPEED (MPH)

WIND DIRECTION	1-4	4-8	8-13	13-19	19-25	>25	TOTAL
N	2	5	1	0	0	0	8
NNE	1	1	0	0	0	0	2
NE	2	2	1	0	0	0	5
ENE	0	0	2	0	0	0	2
E	0	4	3	0	0	0	7
ESE	0	2	0	0	0	0	2
SE	0	6	1	0	0	0	7
SSE	0	3	3	0	0	0	6
S	0	4	4	1	0	0	9
SSW	0	1	1	1	0	0	3
SW	0	5	2	2	0	0	9
WSW	0	1	4	2	0	0	7
W	0	2	2	0	0	0	4
WNW	1	2	0	0	0	0	3
NW	1	8	4	0	0	0	13
NNW	3	10	8	0	0	0	21
TOTAL	10	56	36	6	0	0	108

PERIODS OF CALM(HOURS): 55
VARIABLE DIRECTION: 0
HOURS OF MISSING DATA: 7

SITE: AEP COOK

HOURS AT EACH WIND SPEED AND DIRECTION

PERIOD OF RECORD: 1/1/06 - 3/31/06
STABILITY CLASS: C DT/DZ
ELEVATION: SPEED:SP10M DIRECTION:DIR10M LAPSE:DT60M

WIND DIRECTION	WIND SPEED (MPH) 1-4	4-8	8-13	13-19	19-25	>25	TOTAL
N	2	5	0	0	0	0	7
NNE	0	3	0	0	0	0	3
NE	0	3	1	0	0	0	4
ENE	0	3	2	1	0	0	6
E	0	2	0	0	0	0	2
ESE	0	1	0	0	0	0	1
SE	1	1	1	0	0	0	3
SSE	0	5	0	0	0	0	5
S	2	1	7	0	0	0	10
SSW	1	1	4	1	0	0	7
SW	0	3	3	1	0	0	7
WSW	1	1	5	0	0	0	7
W	0	2	0	0	0	0	2
WNW	0	8	4	0	0	0	12
NW	0	11	5	0	0	0	16
NNW	1	16	9	0	0	0	26
TOTAL	8	66	41	3	0	0	118

PERIODS OF CALM(HOURS): 55
VARIABLE DIRECTION: 0
HOURS OF MISSING DATA: 7

SITE: AEP COOK

HOURS AT EACH WIND SPEED AND DIRECTION

PERIOD OF RECORD: 1/1/06 - 3/31/06
STABILITY CLASS: D DT/DZ
ELEVATION: SPEED:SP10M DIRECTION:DIR10M LAPSE:DT60M

WIND SPEED (MPH)

WIND DIRECTION	1-4	4-8	8-13	13-19	19-25	>25	TOTAL
N	8	47	20	1	0	0	76
NNE	11	23	0	0	0	0	34
NE	9	19	2	0	0	0	30
ENE	9	19	11	0	0	0	39
E	7	21	6	0	0	0	34
ESE	6	34	3	0	0	0	43
SE	14	13	11	0	0	0	38
SSE	7	11	13	0	0	0	31
S	9	21	27	4	0	0	61
SSW	4	19	38	5	0	0	66
SW	6	8	39	0	0	0	53
WSW	3	16	27	5	0	0	51
W	4	19	24	1	0	0	48
WNW	1	34	18	0	0	0	53
NW	6	55	34	0	0	0	95
NNW	21	79	45	0	0	0	145
TOTAL	125	438	318	16	0	0	897

PERIODS OF CALM(HOURS): 55
VARIABLE DIRECTION: 0
HOURS OF MISSING DATA: 7

SITE: AEP COOK

HOURS AT EACH WIND SPEED AND DIRECTION

PERIOD OF RECORD: 1/1/06 - 3/31/06
STABILITY CLASS: E DT/DZ
ELEVATION: SPEED:SP10M DIRECTION:DIR10M LAPSE:DT60M

WIND SPEED (MPH)

WIND DIRECTION	1-4	4-8	8-13	13-19	19-25	>25	TOTAL
N	9	10	9	3	0	0	31
NNE	6	3	0	0	0	0	9
NE	13	4	0	0	0	0	17
ENE	13	7	3	0	0	0	23
E	14	12	13	0	0	0	39
ESE	16	6	3	0	0	0	25
SE	19	20	1	0	0	0	40
SSE	16	23	17	0	0	0	56
S	11	19	14	2	0	0	46
SSW	5	8	2	0	0	0	15
SW	4	3	4	1	0	0	12
WSW	3	5	4	4	0	0	16
W	4	2	1	0	0	0	7
WNW	2	6	2	0	0	0	10
NW	6	6	0	0	0	0	12
NNW	19	2	3	0	0	0	24
TOTAL	160	136	76	10	0	0	382

PERIODS OF CALM(HOURS): 55
VARIABLE DIRECTION: 0
HOURS OF MISSING DATA: 7

SITE: AEP COOK

HOURS AT EACH WIND SPEED AND DIRECTION

PERIOD OF RECORD: 1/1/06 - 3/31/06
STABILITY CLASS: F DT/DZ
ELEVATION: SPEED:SP10M DIRECTION:DIR10M LAPSE:DT60M

WIND SPEED (MPH)

WIND DIRECTION	1-4	4-8	8-13	13-19	19-25	>25	TOTAL
N	0	0	0	0	0	0	0
NNE	2	0	0	0	0	0	2
NE	3	0	0	0	0	0	3
ENE	5	0	0	0	0	0	5
E	6	0	0	0	0	0	6
ESE	15	0	0	0	0	0	15
SE	18	4	0	0	0	0	22
SSE	11	13	5	0	0	0	29
S	9	7	4	0	0	0	20
SSW	3	0	1	3	0	0	7
SW	1	1	0	0	0	0	2
WSW	0	1	0	0	0	0	1
W	1	1	0	0	0	0	2
WNW	1	0	0	0	0	0	1
NW	2	0	0	0	0	0	2
NNW	1	0	0	0	0	0	1
TOTAL	78	27	10	3	0	0	118

PERIODS OF CALM(HOURS): 55
VARIABLE DIRECTION: 0
HOURS OF MISSING DATA: 7

SITE: AEP COOK

HOURS AT EACH WIND SPEED AND DIRECTION

PERIOD OF RECORD: 1/1/06 - 3/31/06
STABILITY CLASS: G DT/DZ
ELEVATION: SPEED:SP10M DIRECTION:DIR10M LAPSE:DT60M

WIND SPEED (MPH)

WIND DIRECTION	1-4	4-8	8-13	13-19	19-25	>25	TOTAL
N	1	0	0	0	0	0	1
NNE	0	0	0	0	0	0	0
NE	1	0	0	0	0	0	1
ENE	3	0	0	0	0	0	3
E	4	0	0	0	0	0	4
ESE	9	0	0	0	0	0	9
SE	15	2	1	0	0	0	18
SSE	9	1	2	0	0	0	12
S	3	3	6	0	0	0	12
SSW	1	0	0	0	0	0	1
SW	0	0	0	0	0	0	0
WSW	1	0	0	0	0	0	1
W	1	0	0	0	0	0	1
WNW	0	0	0	0	0	0	0
NW	2	0	0	0	0	0	2
NNW	0	0	0	0	0	0	0
TOTAL	50	6	9	0	0	0	65

PERIODS OF CALM(HOURS): 55
VARIABLE DIRECTION: 0
HOURS OF MISSING DATA: 7

SITE: AEP COOK

HOURS AT EACH WIND SPEED AND DIRECTION

PERIOD OF RECORD: 1/1/06 - 3/31/06
STABILITY CLASS: ALL DT/DZ
ELEVATION: SPEED:SP10M DIRECTION:DIR10M LAPSE:DT60M

WIND DIRECTION	WIND SPEED (MPH) 1-4	4-8	8-13	13-19	19-25	>25	TOTAL
N	25	96	39	4	0	0	164
NNE	20	40	0	0	0	0	60
NE	28	42	5	0	0	0	75
ENE	30	37	20	1	0	0	88
E	31	46	24	0	0	0	101
ESE	47	49	8	0	0	0	104
SE	68	64	25	0	0	0	157
SSE	44	70	58	0	0	0	172
S	36	57	76	11	0	0	180
SSW	14	30	50	12	0	0	106
SW	12	31	65	5	0	0	113
WSW	9	39	52	13	0	0	113
W	12	32	34	1	0	0	79
WNW	7	81	38	0	0	0	126
NW	22	105	44	0	0	0	171
NNW	48	166	75	0	0	0	289
TOTAL	453	985	613	47	0	0	2098

PERIODS OF CALM(HOURS): 55
VARIABLE DIRECTION: 0
HOURS OF MISSING DATA: 7

SITE: AEP COOK

HOURS AT EACH WIND SPEED AND DIRECTION

PERIOD OF RECORD: 4/1/06 - 6/30/06
STABILITY CLASS: A DT/DZ
ELEVATION: SPEED:SP10M DIRECTION:DIR10M LAPSE:DT60M

WIND SPEED (MPH)

WIND DIRECTION	1-3	4-7	8-12	13-18	19-24	>24	TOTAL
N	6	87	15	0	0	0	108
NNE	2	7	0	0	0	0	9
NE	4	12	1	0	0	0	17
ENE	3	5	4	1	0	0	13
E	3	3	3	0	0	0	9
ESE	3	8	12	0	0	0	23
SE	3	11	18	1	0	0	33
SSE	4	22	17	1	0	0	44
S	2	23	21	3	0	0	49
SSW	2	10	9	0	0	0	21
SW	4	36	20	1	0	0	61
WSW	1	38	11	1	0	0	51
W	6	32	6	0	0	0	44
WNW	8	35	2	0	0	0	45
NW	13	63	1	0	0	0	77
NNW	24	144	10	0	0	0	178
TOTAL	88	536	150	8	0	0	782

PERIODS OF CALM(HOURS): 16
VARIABLE DIRECTION: 0
HOURS OF MISSING DATA: 3

SITE: AEP COOK

HOURS AT EACH WIND SPEED AND DIRECTION

PERIOD OF RECORD: 4/1/06 - 6/30/06
STABILITY CLASS: B DT/DZ
ELEVATION: SPEED:SP10M DIRECTION:DIR10M LAPSE:DT60M

WIND SPEED (MPH)

WIND DIRECTION	1-3	4-7	8-12	13-18	19-24	>24	TOTAL
N	5	5	2	1	0	0	13
NNE	1	3	1	0	0	0	5
NE	1	2	0	0	0	0	3
ENE	1	0	0	0	0	0	1
E	0	1	1	0	0	0	2
ESE	1	4	0	0	0	0	5
SE	2	2	4	0	0	0	8
SSE	3	2	1	1	0	0	7
S	1	1	0	0	0	0	2
SSW	1	1	1	0	0	0	3
SW	1	4	2	0	0	0	7
WSW	4	3	4	0	0	0	11
W	4	3	1	0	0	0	8
WNW	4	1	0	0	0	0	5
NW	5	4	0	0	0	0	9
NNW	8	10	0	0	0	0	18
TOTAL	42	46	17	2	0	0	107

PERIODS OF CALM(HOURS): 16
VARIABLE DIRECTION: 0
HOURS OF MISSING DATA: 3

SITE: AEP COOK

HOURS AT EACH WIND SPEED AND DIRECTION

PERIOD OF RECORD: 4/1/06 - 6/30/06
STABILITY CLASS: C DT/DZ
ELEVATION: SPEED:SP10M DIRECTION:DIR10M LAPSE:DT60M

WIND SPEED (MPH)

WIND DIRECTION	1-3	4-7	8-12	13-18	19-24	>24	TOTAL
N	5	9	5	0	0	0	19
NNE	1	4	0	0	0	0	5
NE	1	0	0	0	0	0	1
ENE	0	2	0	0	0	0	2
E	2	0	0	0	0	0	2
ESE	2	3	1	0	0	0	6
SE	3	5	4	0	0	0	12
SSE	1	4	1	0	0	0	6
S	3	4	2	1	0	0	10
SSW	3	3	4	0	0	0	10
SW	2	11	1	0	0	0	14
WSW	4	5	2	0	0	0	11
W	1	0	2	0	0	0	3
WNW	4	1	3	0	0	0	8
NW	3	3	1	0	0	0	7
NNW	10	5	1	0	0	0	16
TOTAL	45	59	27	1	0	0	132

PERIODS OF CALM(HOURS): 16
VARIABLE DIRECTION: 0
HOURS OF MISSING DATA: 3

SITE: AEP COOK

HOURS AT EACH WIND SPEED AND DIRECTION

PERIOD OF RECORD: 4/1/06 - 6/30/06
STABILITY CLASS: D DT/DZ
ELEVATION: SPEED:SP10M DIRECTION:DIR10M LAPSE:DT60M

WIND SPEED (MPH)

WIND DIRECTION	1-3	4-7	8-12	13-18	19-24	>24	TOTAL
N	22	31	1	0	0	0	54
NNE	13	9	0	0	0	0	22
NE	3	2	0	0	0	0	5
ENE	10	4	3	0	0	0	17
E	2	6	8	0	0	0	16
ESE	3	24	2	0	0	0	29
SE	12	16	23	0	0	0	51
SSE	4	10	4	1	0	0	19
S	4	33	13	3	0	0	53
SSW	6	8	7	0	0	0	21
SW	12	14	4	0	0	0	30
WSW	4	9	12	1	0	0	26
W	4	10	6	0	0	0	20
WNW	8	2	0	0	0	0	10
NW	7	1	1	0	0	0	9
NNW	31	12	3	1	0	0	47
TOTAL	145	191	87	6	0	0	429

PERIODS OF CALM(HOURS): 16
VARIABLE DIRECTION: 0
HOURS OF MISSING DATA: 3

SITE: AEP COOK

HOURS AT EACH WIND SPEED AND DIRECTION

PERIOD OF RECORD: 4/1/06 - 6/30/06
STABILITY CLASS: E DT/DZ
ELEVATION: SPEED:SP10M DIRECTION:DIR10M LAPSE:DT60M

WIND SPEED (MPH)

WIND DIRECTION	1-3	4-7	8-12	13-18	19-24	>24	TOTAL
N	23	1	0	0	0	0	24
NNE	8	1	0	0	0	0	9
NE	9	3	0	0	0	0	12
ENE	4	6	0	0	0	0	10
E	15	12	2	0	0	0	29
ESE	5	14	0	0	0	0	19
SE	9	11	0	0	0	0	20
SSE	6	12	1	0	0	0	19
S	15	30	8	1	0	0	54
SSW	4	9	0	0	0	0	13
SW	6	23	3	0	0	0	32
WSW	5	10	0	0	0	0	15
W	13	2	0	0	0	0	15
WNW	12	3	0	0	0	0	15
NW	13	3	0	0	0	0	16
NNW	18	5	0	0	0	0	23
TOTAL	165	145	14	1	0	0	325

PERIODS OF CALM(HOURS): 16
VARIABLE DIRECTION: 0
HOURS OF MISSING DATA: 3

SITE: AEP COOK

HOURS AT EACH WIND SPEED AND DIRECTION

PERIOD OF RECORD: 4/1/06 - 6/30/06
STABILITY CLASS: F DT/DZ
ELEVATION: SPEED:SP10M DIRECTION:DIR10M LAPSE:DT60M

WIND DIRECTION	WIND SPEED (MPH) 1-3	4-7	8-12	13-18	19-24	>24	TOTAL
N	5	0	0	0	0	0	5
NNE	5	0	0	0	0	0	5
NE	6	1	0	0	0	0	7
ENE	11	1	0	0	0	0	12
E	10	3	0	0	0	0	13
ESE	13	3	0	0	0	0	16
SE	17	2	0	0	0	0	19
SSE	24	12	0	0	0	0	36
S	13	6	0	0	0	0	19
SSW	4	0	0	0	0	0	4
SW	5	1	0	0	0	0	6
WSW	6	0	0	0	0	0	6
W	5	1	0	0	0	0	6
WNW	6	0	0	0	0	0	6
NW	5	0	0	0	0	0	5
NNW	2	0	0	0	0	0	2
TOTAL	137	30	0	0	0	0	167

PERIODS OF CALM(HOURS): 16
VARIABLE DIRECTION: 0
HOURS OF MISSING DATA: 3

SITE: AEP COOK

HOURS AT EACH WIND SPEED AND DIRECTION

PERIOD OF RECORD: 4/1/06 - 6/30/06
STABILITY CLASS: G DT/DZ
ELEVATION: SPEED:SP10M DIRECTION:DIR10M LAPSE:DT60M

WIND DIRECTION	WIND SPEED (MPH) 1-3	4-7	8-12	13-18	19-24	>24	TOTAL
N	2	0	0	0	0	0	2
NNE	1	0	0	0	0	0	1
NE	5	0	0	0	0	0	5
ENE	12	0	0	0	0	0	12
E	19	0	0	0	0	0	19
ESE	26	0	0	0	0	0	26
SE	30	0	0	0	0	0	30
SSE	40	2	0	0	0	0	42
S	23	1	0	0	0	0	24
SSW	20	1	0	0	0	0	21
SW	12	1	0	0	0	0	13
WSW	11	0	0	0	0	0	11
W	5	0	0	0	0	0	5
WNW	5	0	0	0	0	0	5
NW	2	0	0	0	0	0	2
NNW	5	0	0	0	0	0	5
TOTAL	218	5	0	0	0	0	223

PERIODS OF CALM(HOURS): 16
VARIABLE DIRECTION: 0
HOURS OF MISSING DATA: 3

SITE: AEP COOK

HOURS AT EACH WIND SPEED AND DIRECTION

PERIOD OF RECORD: 4/1/06 - 6/30/06
STABILITY CLASS: ALL DT/DZ
ELEVATION: SPEED:SP10M DIRECTION:DIR10M LAPSE:DT60M

WIND SPEED (MPH)

WIND DIRECTION	1-3	4-7	8-12	13-18	19-24	>24	TOTAL
N	68	133	23	1	0	0	225
NNE	31	24	1	0	0	0	56
NE	29	20	1	0	0	0	50
ENE	41	18	7	1	0	0	67
E	51	25	14	0	0	0	90
ESE	53	56	15	0	0	0	124
SE	76	47	49	1	0	0	173
SSE	82	64	24	3	0	0	173
S	61	98	44	8	0	0	211
SSW	40	32	21	0	0	0	93
SW	42	90	30	1	0	0	163
WSW	35	65	29	2	0	0	131
W	38	48	15	0	0	0	101
WNW	47	42	5	0	0	0	94
NW	48	74	3	0	0	0	125
NNW	98	176	14	1	0	0	289
TOTAL	840	1012	295	18	0	0	2165

PERIODS OF CALM(HOURS): 16
VARIABLE DIRECTION: 0
HOURS OF MISSING DATA: 3

SITE: AEP COOK

HOURS AT EACH WIND SPEED AND DIRECTION

PERIOD OF RECORD: 7/1/06 - 9/30/06
STABILITY CLASS: A DT/DZ
ELEVATION: SPEED:SP10M DIRECTION:DIR10M LAPSE:DT60M

WIND SPEED (MPH)

WIND DIRECTION	1-3	4-7	8-12	13-18	19-24	>24	TOTAL
N	16	64	0	0	0	0	80
NNE	8	0	0	0	0	0	8
NE	3	11	0	0	0	0	14
ENE	2	17	0	0	0	0	19
E	3	15	0	0	0	0	18
ESE	4	5	0	0	0	0	9
SE	4	10	0	0	0	0	14
SSE	12	17	0	0	0	0	29
S	9	40	7	1	0	0	57
SSW	3	21	34	0	0	0	58
SW	4	40	19	0	0	0	63
WSW	5	27	2	0	0	0	34
W	11	17	0	0	0	0	28
WNW	8	14	0	0	0	0	22
NW	15	18	0	0	0	0	33
NNW	28	67	0	0	0	0	95
TOTAL	135	383	62	1	0	0	581

PERIODS OF CALM(HOURS): 0
VARIABLE DIRECTION: 0
HOURS OF MISSING DATA: 6

SITE: AEP COOK

HOURS AT EACH WIND SPEED AND DIRECTION

PERIOD OF RECORD: 7/1/06 - 9/30/06
STABILITY CLASS: B DT/DZ
ELEVATION: SPEED:SP10M DIRECTION:DIR10M LAPSE:DT60M

WIND DIRECTION	WIND SPEED (MPH) 1-3	4-7	8-12	13-18	19-24	>24	TOTAL
N	4	2	0	0	0	0	6
NNE	0	1	0	0	0	0	1
NE	3	1	0	0	0	0	4
ENE	2	2	0	0	0	0	4
E	1	1	0	0	0	0	2
ESE	0	1	0	0	0	0	1
SE	4	1	0	0	0	0	5
SSE	2	1	0	0	0	0	3
S	2	6	4	0	0	0	12
SSW	0	6	6	0	0	0	12
SW	3	7	2	0	0	0	12
WSW	3	2	0	0	0	0	5
W	1	1	0	0	0	0	2
WNW	2	0	0	0	0	0	2
NW	2	0	0	0	0	0	2
NNW	6	2	0	0	0	0	8
TOTAL	35	34	12	0	0	0	81

PERIODS OF CALM(HOURS): 0
VARIABLE DIRECTION: 0
HOURS OF MISSING DATA: 6

SITE: AEP COOK

HOURS AT EACH WIND SPEED AND DIRECTION

PERIOD OF RECORD: 7/1/06 - 9/30/06
STABILITY CLASS: C DT/DZ
ELEVATION: SPEED:SP10M DIRECTION:DIR10M LAPSE:DT60M

WIND SPEED (MPH)

WIND DIRECTION	1-3	4-7	8-12	13-18	19-24	>24	TOTAL
N	6	4	0	0	0	0	10
NNE	2	0	0	0	0	0	2
NE	1	1	0	0	0	0	2
ENE	3	1	0	0	0	0	4
E	0	3	0	0	0	0	3
ESE	1	3	0	0	0	0	4
SE	3	0	0	0	0	0	3
SSE	4	3	0	0	0	0	7
S	1	3	1	0	0	0	5
SSW	1	11	2	0	0	0	14
SW	3	3	1	0	0	0	7
WSW	0	2	0	0	0	0	2
W	0	0	0	0	0	0	0
WNW	1	0	0	0	0	0	1
NW	0	1	0	0	0	0	1
NNW	5	0	0	0	0	0	5
TOTAL	31	35	4	0	0	0	70

PERIODS OF CALM(HOURS): 0
VARIABLE DIRECTION: 0
HOURS OF MISSING DATA: 6

SITE: AEP COOK

HOURS AT EACH WIND SPEED AND DIRECTION

PERIOD OF RECORD: 7/1/06 - 9/30/06
STABILITY CLASS: D DT/DZ -
ELEVATION: SPEED:SP10M DIRECTION:DIR10M LAPSE:DT60M

WIND SPEED (MPH)

WIND DIRECTION	1-3	4-7	8-12	13-18	19-24	>24	TOTAL
N	31	21	0	0	0	0	52
NNE	16	0	0	0	0	0	16
NE	10	16	0	0	0	0	26
ENE	8	23	0	0	0	0	31
E	22	31	0	0	0	0	53
ESE	9	2	0	0	0	0	11
SE	12	4	0	0	0	0	16
SSE	16	4	0	0	0	0	20
S	14	49	7	0	0	0	70
SSW	7	37	27	1	0	0	72
SW	4	22	7	0	0	0	33
WSW	12	11	10	0	0	0	33
W	6	5	4	0	0	0	15
WNW	6	7	0	0	0	0	13
NW	5	6	0	0	0	0	11
NNW	10	11	0	0	0	0	21
TOTAL	188	249	55	1	0	0	493

PERIODS OF CALM(HOURS): 0
VARIABLE DIRECTION: 0
HOURS OF MISSING DATA: 6

SITE: AEP COOK

HOURS AT EACH WIND SPEED AND DIRECTION

PERIOD OF RECORD: 7/1/06 - 9/30/06
STABILITY CLASS: E DT/DZ
ELEVATION: SPEED:SP10M DIRECTION:DIR10M LAPSE:DT60M

WIND SPEED (MPH)

WIND DIRECTION	1-3	4-7	8-12	13-18	19-24	>24	TOTAL
N	26	4	0	0	0	0	30
NNE	17	1	0	0	0	0	18
NE	32	20	1	0	0	0	53
ENE	20	10	1	0	0	0	31
E	24	4	0	0	0	0	28
ESE	31	4	0	0	0	0	35
SE	23	2	0	0	0	0	25
SSE	22	3	0	0	0	0	25
S	37	65	3	0	0	0	105
SSW	17	22	4	0	0	0	43
SW	3	12	7	0	0	0	22
WSW	5	2	2	0	0	0	9
W	4	3	0	0	0	0	7
WNW	1	1	0	0	0	0	2
NW	5	0	0	0	0	0	5
NNW	11	1	0	0	0	0	12
TOTAL	278	154	18	0	0	0	450

PERIODS OF CALM(HOURS): 0
VARIABLE DIRECTION: 0
HOURS OF MISSING DATA: 6

SITE: AEP COOK

HOURS AT EACH WIND SPEED AND DIRECTION

PERIOD OF RECORD: 7/1/06 - 9/30/06
STABILITY CLASS: F DT/DZ
ELEVATION: SPEED:SP10M DIRECTION:DIR10M LAPSE:DT60M

WIND SPEED (MPH)

WIND DIRECTION	1-3	4-7	8-12	13-18	19-24	>24	TOTAL
N	6	0	0	0	0	0	6
NNE	5	0	0	0	0	0	5
NE	16	0	0	0	0	0	16
ENE	14	1	0	0	0	0	15
E	44	0	0	0	0	0	44
ESE	29	0	0	0	0	0	29
SE	26	0	0	0	0	0	26
SSE	15	2	0	0	0	0	17
S	41	6	1	0	0	0	48
SSW	3	4	1	0	0	0	8
SW	4	0	0	0	0	0	4
WSW	3	0	0	0	0	0	3
W	2	0	0	0	0	0	2
WNW	1	0	0	0	0	0	1
NW	0	0	0	0	0	0	0
NNW	2	0	0	0	0	0	2
TOTAL	211	13	2	0	0	0	226

PERIODS OF CALM(HOURS): 0
VARIABLE DIRECTION: 0
HOURS OF MISSING DATA: 6

SITE: AEP COOK

HOURS AT EACH WIND SPEED AND DIRECTION

PERIOD OF RECORD: 7/1/06 - 9/30/06
STABILITY CLASS: G DT/DZ
ELEVATION: SPEED:SP10M DIRECTION:DIR10M LAPSE:DT60M

WIND DIRECTION	WIND SPEED (MPH) 1-3	4-7	8-12	13-18	19-24	>24	TOTAL
N	0	0	0	0	0	0	0
NNE	1	0	0	0	0	0	1
NE	5	0	0	0	0	0	5
ENE	26	0	0	0	0	0	26
E	41	0	0	0	0	0	41
ESE	34	0	0	0	0	0	34
SE	32	0	0	0	0	0	32
SSE	66	0	0	0	0	0	66
S	57	3	0	0	0	0	60
SSW	17	1	0	0	0	0	18
SW	5	0	0	0	0	0	5
WSW	5	0	0	0	0	0	5
W	2	0	0	0	0	0	2
WNW	2	0	0	0	0	0	2
NW	2	0	0	0	0	0	2
NNW	2	0	0	0	0	0	2
TOTAL	297	4	0	0	0	0	301

PERIODS OF CALM(HOURS): 0
VARIABLE DIRECTION: 0
HOURS OF MISSING DATA: 6

SITE: AEP COOK

HOURS AT EACH WIND SPEED AND DIRECTION

PERIOD OF RECORD: 7/1/06 - 9/30/06
STABILITY CLASS: ALL DT/DZ
ELEVATION: SPEED:SP10M DIRECTION:DIR10M LAPSE:DT60M

WIND SPEED (MPH)

WIND DIRECTION	1-3	4-7	8-12	13-18	19-24	>24	TOTAL
N	89	95	0	0	0	0	184
NNE	49	2	0	0	0	0	51
NE	70	49	1	0	0	0	120
ENE	75	54	1	0	0	0	130
E	135	54	0	0	0	0	189
ESE	108	15	0	0	0	0	123
SE	104	17	0	0	0	0	121
SSE	137	30	0	0	0	0	167
S	161	172	23	1	0	0	357
SSW	48	102	74	1	0	0	225
SW	26	84	36	0	0	0	146
WSW	33	44	14	0	0	0	91
W	26	26	4	0	0	0	56
WNW	21	22	0	0	0	0	43
NW	29	25	0	0	0	0	54
NNW	64	81	0	0	0	0	145
TOTAL	1175	872	153	2	0	0	2202

PERIODS OF CALM(HOURS): 0
VARIABLE DIRECTION: 0
HOURS OF MISSING DATA: 6

SITE: AEP COOK

HOURS AT EACH WIND SPEED AND DIRECTION

PERIOD OF RECORD: 10/1/06 - 12/31/06
STABILITY CLASS: A DT/DZ
ELEVATION: SPEED:SP10M DIRECTION:DIR10M LAPSE:DT60M

WIND SPEED (MPH)

WIND DIRECTION	1-3	4-7	8-12	13-18	19-24	>24	TOTAL
N	0	8	1	0	0	0	9
NNE	1	3	0	0	0	0	4
NE	0	7	1	0	0	0	8
ENE	0	6	0	0	0	0	6
E	0	5	0	0	0	0	5
ESE	3	0	0	0	0	0	3
SE	2	6	0	0	0	0	8
SSE	2	20	15	0	0	0	37
S	3	19	15	2	0	0	39
SSW	1	2	8	0	0	0	11
SW	1	9	8	0	0	0	18
WSW	2	23	8	4	0	0	37
W	1	18	3	0	0	0	22
WNW	0	15	8	0	0	0	23
NW	2	14	2	0	0	0	18
NNW	1	14	0	0	0	0	15
TOTAL	19	169	69	6	0	0	263

PERIODS OF CALM(HOURS): 1
VARIABLE DIRECTION: 0
HOURS OF MISSING DATA: 0

SITE: AEP COOK

HOURS AT EACH WIND SPEED AND DIRECTION

PERIOD OF RECORD: 10/1/06 - 12/31/06
STABILITY CLASS: B DT/DZ
ELEVATION: SPEED:SP10M DIRECTION:DIR10M LAPSE:DT60M

WIND SPEED (MPH)

WIND DIRECTION	1-3	4-7	8-12	13-18	19-24	>24	TOTAL
N	0	1	2	0	0	0	3
NNE	1	0	0	0	0	0	1
NE	1	1	1	0	0	0	3
ENE	0	0	1	0	0	0	1
E	0	0	0	0	0	0	0
ESE	0	0	0	0	0	0	0
SE	1	3	0	0	0	0	4
SSE	1	6	5	0	0	0	12
S	1	11	9	2	0	0	23
SSW	1	2	6	3	0	0	12
SW	2	8	0	0	0	0	10
WSW	1	4	4	1	0	0	10
W	2	3	8	0	0	0	13
WNW	0	1	3	0	0	0	4
NW	0	2	3	0	0	0	5
NNW	3	3	5	0	0	0	11
TOTAL	14	45	47	6	0	0	112

PERIODS OF CALM(HOURS): 1
VARIABLE DIRECTION: 0
HOURS OF MISSING DATA: 0

SITE: AEP COOK

HOURS AT EACH WIND SPEED AND DIRECTION

PERIOD OF RECORD: 10/1/06 - 12/31/06
STABILITY CLASS: C DT/DZ
ELEVATION: SPEED:SP10M DIRECTION:DIR10M LAPSE:DT60M

WIND SPEED (MPH)

WIND DIRECTION	1-3	4-7	8-12	13-18	19-24	>24	TOTAL
N	2	5	1	0	0	0	8
NNE	0	3	0	0	0	0	3
NE	0	6	0	0	0	0	6
ENE	0	6	0	0	0	0	6
E	1	2	1	0	0	0	4
ESE	2	2	0	0	0	0	4
SE	2	3	0	0	0	0	5
SSE	0	9	1	0	0	0	10
S	4	14	14	1	0	0	33
SSW	2	4	5	1	0	0	12
SW	0	4	2	2	0	0	8
WSW	0	7	9	6	0	0	22
W	1	10	14	0	0	0	25
WNW	1	4	12	1	0	0	18
NW	1	3	2	0	0	0	6
NNW	3	2	6	0	0	0	11
TOTAL	19	84	67	11	0	0	181

PERIODS OF CALM(HOURS): 1
VARIABLE DIRECTION: 0
HOURS OF MISSING DATA: 0

SITE: AEP COOK

HOURS AT EACH WIND SPEED AND DIRECTION

PERIOD OF RECORD: 10/1/06 - 12/31/06
STABILITY CLASS: D DT/DZ
ELEVATION: SPEED:SP10M DIRECTION:DIR10M LAPSE:DT60M

WIND DIRECTION	WIND SPEED (MPH) 1-3	4-7	8-12	13-18	19-24	>24	TOTAL
N	10	38	27	0	0	0	75
NNE	4	22	12	1	0	0	39
NE	5	21	11	0	0	0	37
ENE	10	12	1	0	0	0	23
E	9	24	0	0	0	0	33
ESE	13	29	4	0	0	0	46
SE	14	31	9	0	0	0	54
SSE	20	44	19	0	0	0	83
S	9	66	57	4	0	0	136
SSW	0	23	51	10	0	0	84
SW	4	8	30	6	0	0	48
WSW	4	18	41	20	0	0	83
W	2	46	33	0	0	0	81
WNW	5	41	24	0	0	0	70
NW	12	32	19	0	0	0	63
NNW	24	28	24	0	0	0	76
TOTAL	145	483	362	41	0	0	1031

PERIODS OF CALM(HOURS): 1
VARIABLE DIRECTION: 0
HOURS OF MISSING DATA: 0

SITE: AEP COOK

HOURS AT EACH WIND SPEED AND DIRECTION

PERIOD OF RECORD: 10/1/06 - 12/31/06
STABILITY CLASS: E DT/DZ
ELEVATION: SPEED:SP10M DIRECTION:DIR10M LAPSE:DT60M

WIND SPEED (MPH)

WIND DIRECTION	1-3	4-7	8-12	13-18	19-24	>24	TOTAL
N	4	3	0	0	0	0	7
NNE	13	2	0	0	0	0	15
NE	8	0	0	0	0	0	8
ENE	4	7	0	0	0	0	11
E	11	8	0	0	0	0	19
ESE	21	8	1	0	0	0	30
SE	26	18	4	0	0	0	48
SSE	18	45	4	0	0	0	67
S	15	47	10	0	0	0	72
SSW	4	16	3	0	0	0	23
SW	4	1	1	0	0	0	6
WSW	2	2	2	0	0	0	6
W	4	2	1	0	0	0	7
WNW	8	3	0	0	0	0	11
NW	12	8	0	0	0	0	20
NNW	4	6	0	0	0	0	10
TOTAL	158	176	26	0	0	0	360

PERIODS OF CALM(HOURS): 1
VARIABLE DIRECTION: 0
HOURS OF MISSING DATA: 0

SITE: AEP COOK

HOURS AT EACH WIND SPEED AND DIRECTION

PERIOD OF RECORD: 10/1/06 - 12/31/06
STABILITY CLASS: F DT/DZ
ELEVATION: SPEED:SP10M DIRECTION:DIR10M LAPSE:DT60M

WIND SPEED (MPH)

WIND DIRECTION	1-3	4-7	8-12	13-18	19-24	>24	TOTAL
N	2	0	0	0	0	0	2
NNE	3	0	0	0	0	0	3
NE	5	1	0	0	0	0	6
ENE	5	0	0	0	0	0	5
E	11	0	0	0	0	0	11
ESE	9	1	0	0	0	0	10
SE	19	8	0	0	0	0	27
SSE	31	15	0	0	0	0	46
S	8	12	0	0	0	0	20
SSW	0	0	0	0	0	0	0
SW	0	0	0	0	0	0	0
WSW	0	0	0	0	0	0	0
W	0	0	0	0	0	0	0
WNW	1	0	0	0	0	0	1
NW	2	0	0	0	0	0	2
NNW	3	0	0	0	0	0	3
TOTAL	99	37	0	0	0	0	136

PERIODS OF CALM(HOURS): 1
VARIABLE DIRECTION: 0
HOURS OF MISSING DATA: 0

SITE: AEP COOK

HOURS AT EACH WIND SPEED AND DIRECTION

PERIOD OF RECORD: 10/1/06 - 12/31/06
STABILITY CLASS: G DT/DZ
ELEVATION: SPEED:SP10M DIRECTION:DIR10M LAPSE:DT60M

WIND SPEED (MPH)

WIND DIRECTION	1-3	4-7	8-12	13-18	19-24	>24	TOTAL
N	2	0	0	0	0	0	2
NNE	3	0	0	0	0	0	3
NE	2	0	0	0	0	0	2
ENE	6	0	0	0	0	0	6
E	17	0	0	0	0	0	17
ESE	11	0	0	0	0	0	11
SE	20	1	0	0	0	0	21
SSE	29	1	0	0	0	0	30
S	21	4	0	0	0	0	25
SSW	3	0	0	0	0	0	3
SW	0	0	0	0	0	0	0
WSW	0	0	0	0	0	0	0
W	0	0	0	0	0	0	0
WNW	1	0	0	0	0	0	1
NW	2	0	0	0	0	0	2
NNW	1	0	0	0	0	0	1
TOTAL	118	6	0	0	0	0	124

PERIODS OF CALM(HOURS): 1
VARIABLE DIRECTION: 0
HOURS OF MISSING DATA: 0

SITE: AEP COOK

HOURS AT EACH WIND SPEED AND DIRECTION

PERIOD OF RECORD: 10/1/06 - 12/31/06
STABILITY CLASS: ALL DT/DZ
ELEVATION: SPEED:SP10M DIRECTION:DIR10M LAPSE:DT60M

WIND SPEED (MPH)

WIND DIRECTION	1-3	4-7	8-12	13-18	19-24	>24	TOTAL
N	20	55	31	0	0	0	106
NNE	25	30	12	1	0	0	68
NE	21	36	13	0	0	0	70
ENE	25	31	2	0	0	0	58
E	49	39	1	0	0	0	89
ESE	59	40	5	0	0	0	104
SE	84	70	13	0	0	0	167
SSE	101	140	44	0	0	0	285
S	61	173	105	9	0	0	348
SSW	11	47	73	14	0	0	145
SW	11	30	41	8	0	0	90
WSW	9	54	64	31	0	0	158
W	10	79	59	0	0	0	148
WNW	16	64	47	1	0	0	128
NW	31	59	26	0	0	0	116
NNW	39	53	35	0	0	0	127
TOTAL	572	1000	571	64	0	0	2207

PERIODS OF CALM(HOURS): 1
VARIABLE DIRECTION: 0
HOURS OF MISSING DATA: 0

OFF-SITE DOSE CALCULATION MANUAL

The Off-Site Dose Calculation Manual, PMP-6010-OSD-001, was revised during this reporting period. Copies of Revisions 20 and 21 are included as part of the report. The PORC approval and reasons for the changes are documented under procedure Approvals and on the Revision Summary form, respectively. These changes were determined to maintain the level of radioactive effluent control required by 10 CFR 20.1302, 40 CFR 190, 10 CFR 50.36a, and Appendix I to 10 CFR 50 and not adversely impact the accuracy or reliability of effluent, dose, or setpoint calculations.

Section 1 - Procedure Information:

Number: PMP-6010-OSD-001 Rev. 20

Title: OFF-SITE DOSE CALCULATION MANUAL

Section 2 – Alteration Category:

☐ Minor Editorial Correction
☐ Major Editorial Correction (Full Review)
☒ Minor Revision
☐ Major Revision (Full Review)
☐ Cancellation
☐ Superseded by (list superseding procedures):
☐ New Procedure (Full Review)

Section 3 – Temporary Procedure / Revision:

☒ N/A ☐ Temporary Procedure ☐ Temporary Revision AR No.:

Expiration Date / Ending Activity: NA

Section 4 – Associated Configuration Impact Assessments:

Change Driver / CDI Tracking No(s). ☒ N/A

Section 5 - Reviews:

Department (Refer to Figure 6, Determination of Required Reviews)	Validation (Figure 11)	Cross-Discipline (Figure 7)	Special (Figure 8 or Figure 10)	Technical (Figure 9)
Operations	☐	☒	☐	☐
Site Procedure Group	☐	☒	☐	☐
MTE (I&C)	☐	☒	☐	☐
E-Plan	☐	☐	☒	☐
Surveillance	☐	☐	☒	☐
Technical	☐	☐	☐	☒

Section 6 – Technical Review:

Updated Revision Summary and Implementation Plan (if applicable) attached? ☒ Yes

Implementation Plan developed? If yes, AR No.: ☐ Yes ☒ N/A

Are there implementation actions to be completed prior to the effective date? ☐ Yes ☒ No

10 CFR 50.59 Requirements complete? Tracking No.: ☐ Yes ☒ N/A

Technical Reviewer: Jon Haerner / Jon Haerner Date: 6-2-06

Section 7 – Ready for Approval:

Administrative Hold Status: ☐ Released ☐ Reissued ☒ N/A CR No.:

Writer: [signature] Date: 5/19/06

☐ Ops Manager Concurrence: NA Date:

Section 8 – Approvals:

PORC Review Required: ☒ Yes ☐ No Mtg No.: 4232

Approval Authority Review/Approval: [signature] Date: 6/12/06

Effective Date: 6-22-06

Section 9 – Follow-up Actions:

Commitment Database update requested in accordance with PMP-2350-CMS-001? ☐ Yes ☒ N/A

NDM notified of new records or changes to records that could affect record retention? ☐ Yes ☒ N/A

Office Information For Form Tracking Only – Not Part of Form

This is a free-form as called out in PMP-2010-PRC-002, Procedure Alteration, Review, and Approval.

REVISION SUMMARY

Procedure No.: PMP-6010-OSD-001 Rev. No.: 20
Title: OFF-SITE DOSE CALCULATION MANUAL

Alteration	Justification
10 CFR 50.59	The changes made in this revision are specific to and implement the requirements of 10 CFR 20 Standards for Protection Against Radiation and was processed in accordance with PMP-2010-PRC-002, Procedure Alterations, Review, and Approval; therefore, further 10 CFR 50.59 review is not applicable. Review is governed by 12-EA-6090-ENV-114, Effectiveness Review for ODCM/PCP Programs.
Section 2, added Term 'B' for at least once per 24 month.	ITS changed RMS frequency from 18 months to 24. CR 05343039 determined it was acceptable to do Non Tech Spec RMS monitors also. This is a change.
3.1.1.c, Q_i term, added clarifying information for where determining quantities equations reside.	Explicitly listed use reference procedure that directs quantification activities. Editorial correction criteria n.
3.3.2.a Note added information linking changes to these formulas to 10 CFR 50.54 (q) review by Emergency Planning.	This is an alteration to ensure Emergency Plan review for potential impact from IN 5-19 (CR 06003033) evaluation. Editorial correction criteria n.
3.5.2.a.3 & 4 Formatted conditional If, Then statements correctly and added special report submission for exceedences.	Complies with PMP-2010-PRC-001, Att 2, step 2.2. NUREG-1301 reporting criteria. Editorial correction criteria j.
3.8.1.a, Changed Environmental Operating Report due date from May 1 to May 15 and added link to reference and Tech Spec.	REMP program owner has decided to take advantage of the additional 15 days allowed by ITS 5.6.2. Linked reference per PRC-001, step 3.11.1 based on reviewer comment. Editorial correction criteria n.
3.8.2.a, Added link to reference and Tech Spec.	Linked reference per PRC-001, step 3.11.1 based on reviewer comment. Editorial correction criteria n.
Att 3.2, added item 4.d and Action 5 to allow for maintaining radiation monitor operable and verifying flow within appropriate range	To allow flexibility desired by Operations Department personnel in maintaining RMS monitors operable when appropriate. CR 05338009. This is a change.

Office Information for Form Tracking Only - Not Part of Form

This is a free-form as called out in PMP-2010-PRC-002, Procedure Alteration, Review, and Approval.

REVISION SUMMARY

Procedure No.: PMP-6010-OSD-001 Rev. No.: 20
Title: OFF-SITE DOSE CALCULATION MANUAL

Alteration	Justification
Att 3.2, Actions 2, 3 & 4, and Att 3.4, Action 9, added clarifying verbiage providing guidance on what actions are necessary if 30 or 14 day time limit is exceeded.	Clarification from action allowed by step 3.8.2c. CR 06051051. Editorial correction criteria q.
Att 3.2, + footnote, added clarifying information pertaining to ensuring operability criteria is met prior to fulfilling applicability criteria.	Information from Surveillance Program owner questioning whether all monitors are being kept up to date as far as surveillance requirements go. This is to ensure that this is considered prior to switching to different monitor. Editorial correction criteria p.
Att 3.3 changed items 1, 2 and 4 and Att 3.5 items 1 through 5, calibration frequency from 18 month, refueling cycle to 24 month.	ITS changed RMS frequency from 18 months to 24. CR 05343039 determined it was acceptable to do other RMS monitors also. This is a change.
Att 3.4 item 3 & 4, added ** and footnote of same designation clarifying that compensatory duplicate sampling is allowed for containment purge as well as any other identified batch releases.	Clarification from action allowed by Att 3.4, Action 9. Editorial correction criteria q.
Att 3.4, Notation 2, added clarifying information describing actions for switching from ventilate mode to clean-up mode after initial clean-up purge is complete	Clarification that includes verbiage that is implementing procedures. Editorial correction criteria q.
Att 3.5, items 3 a, b and 4 a Channel check, removed ** designation from these items.	Containment monitors (a & b) don't actually have releases so the designation was not appropriate. 4.a is for the check to be performed prior to the release, not during. This is a change.
Att 3.16 Added clarifying word 'TO' with sector.	Response to Tech reviewer comment. Editorial correction criteria p.
Att 3.19 Groundwater Sample Stations and Att 3.22 map, added W-15.	Added this well to improve monitoring capability. CR 06058026. This is a change.
Att 3.21 Added Conditional statement clarifying what sort of reporting is required.	Clarifying information pertaining to required reporting detail. Editorial correction criteria p.

REVISION SUMMARY

Procedure No.: PMP-6010-OSD-001 Rev. No.: 20

Title: OFF-SITE DOSE CALCULATION MANUAL

Alteration	Justification
Att 3.22, Added W-15 referenced in Att 3.19. No marginal marking used on this map.	Added this well to improve monitoring capability. CR 06058026. This is a change.

Office Information for Form Tracking Only - Not Part of Form

This is a free-form as called out in PMP-2010-PRC-002, Procedure Alteration, Review, and Approval.

TABLE OF CONTENTS

1 PURPOSE AND SCOPE 4

2 DEFINITIONS AND ABBREVIATIONS 4

3 DETAILS 5

3.1 Calculation of Off-Site Doses 5

3.1.1 Gaseous Effluent Releases 5

3.1.2 Liquid Effluent Releases 10

3.2 Limits of Operation and Surveillances of the Effluent Release Points 13

3.2.1 Radioactive Liquid Effluent Monitoring Instrumentation 13

3.2.2 Radioactive Gaseous Effluent Monitoring Instrumentation 14

3.2.3 Liquid Effluents 16

a. Concentration Excluding Releases via the Turbine Room Sump (TRS) Discharge 16

b. Concentration of Releases from the TRS Discharge 16

c. Dose 17

d. Liquid Radwaste Treatment System 17

3.2.4 Gaseous Effluents 20

a. Dose Rate 20

b. Dose – Noble Gases 20

c. Dose – Iodine-131, Iodine-133, Tritium, and Radioactive Material in Particulate Form 20

d. Gaseous Radwaste Treatment 21

3.2.5 Radioactive Effluents – Total Dose 23

3.3 Calculation of Alarm/Trip Setpoints 24

3.3.1 Liquid Monitors 25

a. Liquid Batch Monitor Setpoint Methodology 25

b. Liquid Continuous Monitor Setpoint Methodology 26

3.3.2 Gaseous Monitors 28

a. Plant Unit Vent 28

b. Waste Gas Storage Tanks 31

c. Containment Purge and Exhaust System 31

d. Steam Jet Air Ejector System (SJAE) 32

e. Gland Seal Condenser Exhaust 33

3.4 Radioactive Effluents Total Dose 33

3.5 Radiological Environmental Monitoring Program (REMP) 33

3.5.1 Purpose of the REMP 33

3.5.2 Conduct of the REMP 34

3.5.3 Annual Land Use Census 36

3.5.4 Interlaboratory Comparison Program 37

3.6 Radioactive Equipment Storage Facility (Mausoleum) Groundwater Monitoring Program 37

3.6.1 Purpose of the Radioactive Equipment Storage Facility (Mausoleum) Groundwater Radiological Monitoring Program 37

3.6.2 Conduct of the Radioactive Equipment Storage Facility (Mausoleum) Groundwater Radiological Monitoring Program 38

3.7 Meteorological Model 38

3.8 Reporting Requirements 38

3.8.1 Annual Radiological Environmental Operating Report (AREOR) 38

3.8.2 Annual Radiological Effluent Release Report (ARERR) 39

3.9 10 CFR 50.75 (g) Implementation 41

3.10 Reporting/Management Review 41

4 FINAL CONDITIONS 41

5 REFERENCES 42

SUPPLEMENTS

Attachment 3.1 Dose Factors for Various Pathways ..... Pages 44 - 47

Attachment 3.2 Radioactive Liquid Effluent Monitoring Instruments ..... Pages 48 - 50

Attachment 3.3 Radioactive Liquid Effluent Monitoring Instrumentation Surveillance Requirements ..... Pages 51 - 52

Attachment 3.4 Radioactive Gaseous Effluent Monitoring Instrumentation ..... Pages 53 - 55

Attachment 3.5 Radioactive Gaseous Effluent Monitoring Instrumentation Surveillance Requirements ..... Pages 56 - 57

Attachment 3.6 Radioactive Liquid Waste Sampling and Analysis Program ..... Pages 58 - 59

Attachment 3.7 Radioactive Gaseous Waste Sampling and Analysis Program ..... Pages 60 - 61

Attachment 3.8 Multiple Release Point Factors for Release Points ..... Page 62

Attachment 3.9 Liquid Effluent Release Systems ..... Page 63

Attachment 3.10 Plant Liquid Effluent Parameters ..... Page 64

Attachment 3.11 Volumetric Detection Efficiencies for Principle Gamma Emitting Radionuclides for Eberline Liquid Monitors ..... Page 65

Attachment 3.12 Counting Efficiency Curves for R-19, and R-24 ..... Pages 66 - 67

Attachment 3.13 Counting Efficiency Curve for R-20, and R-28 ..... Page 68

Attachment 3.14 Gaseous Effluent Release Systems ..... Page 69

Attachment 3.15 Plant Gaseous Effluent Parameters ..... Page 70

Attachment 3.16 10 Year Average of 1995-2004 Data ..... Pages 71 - 72

Attachment 3.17 Annual Evaluation of $\overline{\chi/Q}$ and $\overline{D/Q}$ Values For All Sectors ..... Page 73

Attachment 3.18 Dose Factors ..... Pages 74 - 75

Attachment 3.19 Radiological Environmental Monitoring Program Sample Stations, Sample Types, Sample Frequencies ..... Pages 76 - 79

Attachment 3.20 Maximum Values for Lower Limits of Detections[A,B] - REMP ..... Pages 80 - 81

Attachment 3.21 Reporting Levels for Radioactivity Concentrations in Environmental Samples ..... Page 82

Attachment 3.22 On-Site Monitoring Location - REMP ..... Page 83

Attachment 3.23 Off-Site Monitoring Locations - REMP ..... Page 84

Attachment 3.24 Safety Evaluation By The Office Of Nuclear Reactor Regulation ..... Pages 85 - 87

1 PURPOSE AND SCOPE

NOTE:	This is an Administrative procedure and only the appropriate sections need be performed per PMP-2010-PRC-003, step 3.2.7.

- The Off-Site Dose Calculation Manual (ODCM) is the top tier document for the Radiological Environmental Monitoring Program (REMP), the Radioactive Effluent Controls Program (RECP), contains criteria pertaining to the previous Radiological Effluent Technical Specifications (RETS) as defined in NUREG-0472, and fully implements the requirements of Technical Specification 5.5.3, Radioactive Effluent Controls Program.
- The ODCM contains the methodology and parameters to be used in the calculation of off-site doses due to radioactive liquid and gaseous effluents and in the calculation of liquid and gaseous monitoring instrumentation alarm/trip setpoints.
- The ODCM provides flow diagrams detailing the treatment path and the major components of the radioactive liquid and gaseous waste management systems.
- The ODCM presents maps of the sample locations and the meteorological model used to estimate the atmospheric dispersion and deposition parameters.
- The ODCM specifically addresses the design characteristics of the Donald C. Cook Nuclear Plant based on the flow diagrams contained on the "OP Drawings" and plant "System Description" documents.

2 DEFINITIONS AND ABBREVIATIONS

Term:	Meaning:
S or shiftly	At least once per 12 hours
D or daily	At least once per 24 hours
W or weekly	At least once per 7 days
M or monthly	At least once per 31 days
Q or quarterly	At least once per 92 days
SA or semi-annually	At least once per 184 days
R	At least once per 549 days.
S/U	Prior to each reactor startup
P	Completed prior to each release
B	At least once per 24 months
Sampling evolution	Process of changing filters or obtaining grab samples

Member(s) of Public	All persons who are not occupationally associated with the plant. Does not include employees of the utility, its contractors or its vendors. Also excluded from this category are persons who enter the site to service equipment or to make deliveries. This category does include persons who use portions of the site for recreational, occupational or other purposes not associated with the plant.
Purge/purging	The controlled process of discharging air or gas from a confinement to maintain temperature, pressure, humidity, concentration or other operating condition, in such a manner that replacement air or gas is required to purify the confinement.
Source check	The qualitative assessment of Channel response when the Channel sensor is exposed to a radioactive source.
Venting	Controlled process of discharging air or gas from a confinement to maintain temperature, pressure, humidity, concentration or other operating condition, in such a manner that replacement air or gas is not provided or required. Vent, used in system names, does not imply a venting process.

3 DETAILS

3.1 Calculation of Off-Site Doses

3.1.1 Gaseous Effluent Releases

a. The computer program MIDAS (Meteorological Information and Dose Assessment System) performs the calculation of doses from effluent releases. The site-specific parameters associated with MIDAS reside in the following subprograms:

- MIDER
- MIDEX
- MIDEL
- MIDEG
- MIDEN

b. The subprogram used to enter and edit gaseous release data is called MD1EQ (EQ). The data entered in EQ can be used to calculate the accumulation of dose to individual land based receptors based on hourly meteorology and release data. The air dose from this data is calculated via the XDAIR subprogram in MIDAS. It computes air dose results for use in Reg. Guide 1.21 reports and 10 CFR 50 Appendix I calculations based on routine releases.

c. The formula used for the calculation of the air dose is generated from site specific parameters and Reg. Guide 1.109 (Eq 7):

$$D_\gamma, D_\beta\, air = \frac{\overline{\chi}}{Q} * \Sigma[(M_i \text{ or } N_i) * Q_i * 3.17E-8]$$

Where;

D_γ , D_β air = the gamma or beta air dose in mrad/yr to an individual receptor

$\overline{\chi / Q}$ = the annual average or real time atmospheric dispersion factor over land, sec/m^3 from Attachment 3.16, 10 Year Average of 1995-2004 Data

M_i = the gamma air dose factor, mrad m^3 / yr μCi, from Attachment 3.18, Dose Factors

N_i = the beta air dose factor, mrad m^3 / yr μCi, from Attachment 3.18, Dose Factors

Q_i = the release rate of radionuclide, "i", in μCi/yr. Quantities are determined utilizing typical concentration times volumes equations that are documented in 12-THP-6010-RPP-606, Preparation of the Annual Radioactive Effluent Release Report.

3.17E-8 = number of years in a second (years/second).

d. The value for the ground average $\overline{\chi / Q}$ for each sector is calculated using equations shown below. Formula used for the calculation is generated from parameters contained in MIDAS Technical Manual, XDCALC (Eq 2).

$$\overline{\chi/Q} = \frac{2.03}{\overline{u}_{m_g} * x * \Sigma_g} * T_f$$

Where;

$$\Sigma_g = \text{minimum of } \sqrt{\sigma_{z_g}^2 + \frac{H_c^2}{2\pi}} \text{ or } \Sigma_g = \sqrt{3}\,\sigma_{z_g}$$

x = distance downwind of the source, meters. This information is found in parameter 5 of MIDEX.

$\overline{u}_{m_g}$ = wind speed for ground release, (meters/second)

σ_{z_g} = vertical dispersion coefficient for ground release, (meters), (Reg. Guide 1.111 Fig.1)

H_c = building height (meters) from parameter 28 of MIDER. (Containment Building = 49.4 meters)

T_f = terrain factor (= 1 for Cook Nuclear Plant) because we consider all our releases to be ground level (see parameter 5 in MIDEX).

$$2.03 = \sqrt{2 \div \pi} \div 0.393 \, radians \, (22.5°)$$

e. The dose due to gaseous releases, other than the air dose, is calculated by the MIDAS subprogram GASPRO. GASPRO computes the accumulation of dose to individual receptors based on hourly meteorology and release data. Calculations consider the effect of each important radionuclide for each pathway, organ, age group, distance and direction.

f. Calculations are based on the environmental pathways-to-man models in Reg. Guide 1.109. The program considers 7 pathways, 8 organs, and 4 age groups in 16 direction sectors. The distances used are taken from the MIDEG file.

g. The formulas used for the following calculations are generated from site specific parameters and Reg. Guide 1.109:

1. Total Body Plume Pathway (Eq 10)

$$Dose\,(mrem/year) = 3.17E\text{-}8 * \Sigma(Q_i * \overline{\chi/Q} * S_f * DFB_i)$$

Where;

S_f = shielding factor that accounts for the dose reduction due to shielding provided by residential structures during occupancy (maximum exposed individual = 0.7 per Table E-15 of Reg. Guide 1.109)

DFB_i = the whole body dose factor from Table B-1 of Reg. Guide 1.109, mrem - m^3 per μCi - yr. See Attachment 3.18, Dose Factors.

Q_i = the release rate of radionuclide "i", in μCi/yr

2. Skin Plume Pathway (Eq 11)

$$Dose\ (mrem/yr) = 3.17E-8 * S_f * \frac{\overline{\chi}}{Q} * [\Sigma(Q_i * 1.11 * DF_i^{\gamma}) + \Sigma(Q_i * DFS_i)]$$

Where;

1.11 = conversion factor, tissue to air, mrem/mrad

DF_i^{γ} = the gamma air dose factor for a uniform semi-infinite cloud of radionuclide "i", in mrad $m^3/\mu Ci$ yr from Table B-1, Reg. Guide 1.109. See Attachment 3.18, Dose Factors.

DFS_i = the beta skin dose factor for a semi-infinite cloud of radionuclide "i", in mrem $m^3/\mu Ci$ yr from Table B-1, Reg. Guide 1.109. See Attachment 3.18, Dose Factors.

3. Radionuclide and Radioactive Particulate Doses (Eq 13 & 14)

The dose, D_{IP} in mrem/yr, to an individual from radionuclides, other than noble gases, with half-lives greater than eight days in gaseous effluents released to unrestricted areas will be determined as follows:

$$D_{IP}\ (mrem/year) = 3.17E-8 * \Sigma(R_i * W * Q_{ic})$$

Where;

R_i = the most restrictive dose factor for each identified radionuclide "i", in m^2 mrem sec / yr μCi (for food and ground pathways) or mrem m^3 / yr μCi (for inhalation pathway), for the appropriate pathway

For sectors with existing pathways within five miles of the site, use the values of R_i for these real pathways, otherwise use pathways distance of five miles. See Attachment 3.1, Dose Factors for Various Pathways, for the maximum R_i values for the most controlling age group for selected radionuclides. R_i values were generated by computer code PARTS, see NUREG-0133, Appendix D.

W = the annual average or real time atmospheric dispersion parameters for estimating doses to an individual at the worst case location, and where W is further defined as:

W_{in} = $\overline{\chi / Q}$ for the inhalation pathway, in sec/m^3

-OR-

W_{fg} = $\overline{D/Q}$ for the food and ground pathways in $1/m^2$

Q_{ic} = the release rate of those radioiodines, radioactive materials in particulate form and radionuclides other than noble gases with half-lives greater than eight days, in μCi/yr

h. This calculation is made for each pathway. The maximum computed dose at any receptor for each pathway is selected. These are summed together to get the dose to compare to the limits. Only the maximum of the cow milk or goat milk pathway (not both) is included in the total.

i. In addition to the above routines, the QUICKG routine of the MIDAS system is used to provide data used in the monthly reports due to its ability to use annual average meteorological data rather than real time data, thus shortening the run time involved.

j. Steam Generator Blowdown System (Start Up Flash Tank Vent)

1. The amount of radioiodine and other radionuclides that are released via the start up flash tank and its vent are calculated through actual sample results while the start up flash tank is in service.

2. The following calculation is performed to determine the amount of curies released through this pathway. (Plant established formula.)

$$Curies = \frac{\mu Ci}{ml} * GPM * time\ on\ flash\ tank\ (\min) * 3.785E-3$$

Where; 3.785E-3 = conversion factor, ml Ci/μCi gal.

3. The flow rate is determined from the blowdown valve position and the time on the start up tank. Chemistry Department performs the sampling and analysis of the samples.

4. This data is provided to the MIDAS computer and dose calculations (liquid and gas) are performed to ensure compliance with Subsection 3.2, Limits of Operation and Surveillances of the Effluent Release Points, dose limits. MIDAS uses the formulas given in step 3.1.2, Liquid Effluent Releases, to calculate doses to members of the public.

NOTE: This section provides the minimum requirements to be followed at Donald C. Cook Nuclear Plant. This would be used if actual sample data was not available each time the start up flash tank was in service.

5. The radioiodine release rate must be determined in accordance with the following equation every 31 day period whenever the specific activity of the secondary coolant system is greater than 0.01 μCi/g dose equivalent I-131.

6. **IF** the specific activity of the secondary coolant system is less than 0.01 μCi/g dose equivalent I-131, **THEN** the release rate must be determined once every six months. Use the following plant established equation:

$$Q_y = Ci * \quad IPF * \quad R_{sgb}$$

Where;

Q_y = the release rate of I-131 from the steam generator flash tank vent, in μCi/sec

Ci = the concentration (μCi/cc) of I-131 in the secondary coolant averaged over a period not exceeding seven days

IPF = the iodine partition factor for the Start Up Flash Tank, 0.05, in accordance with NUREG-0017

Rsgb = the steam generator blowdown rate to the start up flash tank, in cc/sec

7. Use the calculated release rate in monthly dose projections until the next determination to ensure compliance with Subsection 3.2, Limits of Operation and Surveillances of the Effluent Release Points, dose limits. Report the release rate calculations in the Annual Radioactive Effluent Release Report.

3.1.2 Liquid Effluent Releases

a. The calculation of doses from liquid effluent releases is also performed by the MIDAS program. The subprogram used to enter and edit liquid release data is called MD1EB (EB).

b. To calculate the individual dose (mrem), the program DS1LI (LD) is used. It computes the individual dose for up to 5 receptors for 14 liquid pathways due to release of radioactive liquid effluents. The pathways can be selected using the MIDEL program and changing the values in parameter 1. D.C. Cook Nuclear Plant uses 3 pathways: potable water, shoreline, and aquatic foods (fresh water sport fishing).

c. Steam Generators are sparged, sampled, and drained as batches usually early in outages to facilitate cooldown for entry into the steam generator. This is typically repeated prior to startup to improve steam generator chemistry for the startup. The sample stream, if being routed to the operating unit blowdown, is classified as a continuous release for quantification purposes to maintain uniformity with this defined pathway.

d. The equations used are generated from site specific data and Reg. Guide 1.109. They are as follows:

1. Potable Water (Eq 1)

$$R_{apj} = 1100 * \frac{U_{ap}}{M_P * F * 2.23E-3} * \sum_i Q_i * D_{aipj} e^{-\lambda_i t_p}$$

Where;

R_{apj} = the total annual dose to organ "j" to individuals of age groups "a" from all of the nuclides "i" in pathway "p", in mrem/year

1100 = conversion factor, yr ft^3 ρCi / Ci sec L

U_{ap} = a usage factor that specifies the exposure time or intake rate for an individual of age group "a" associated with pathway "p". Given in #29-84 of parameter 4 in MIDEL and Reg. Guide 1.109 Table E-5. See Attachment 3.1, Dose Factors for Various Pathways.

M_p = the dilution factor at the point of exposure (or the point of withdrawal of drinking water or point of harvest of aquatic food). Given in parameter 5 of MIDEL as 2.6.

F = the circulation water system water flow rate, in gpm, is used for evaluating dose via these pathways as dilution flow

2.23E-3 = conversion factor, ft^3 min / sec gal

Q_i = the release rate of nuclide "i" for the time period of the run input via MIDEB, Curies/year

D_{aipj} = the dose factor, specific to a given age group "a", radionuclide "i", pathway "p", and organ "j", which can be used to calculate the radiation dose from an intake of a radionuclide, in mrem/ρCi. These values are taken from tables E-11 through E-14 of Reg. Guide 1.109 and are located within the MIDAS code.

λ_i = the radioactive decay constant for radionuclide "i", in $hours^{-1}$

t_p = the average transit time required for nuclides to reach the point of exposure, 12 hours. This allows for nuclide transport through the water purification plant and the water distribution system. For internal dose, t_p is the total elapsed time between release of the nuclides and ingestion of food or water, in hours. Given as #25 of parameter 4 in MIDEL. (t_p = 12 hours)

2. Aquatic Foods (Eq 2)

$$R_{apj} = 1100 * \frac{U_{ap}}{M_P * F * 2.23E-3} * \sum_i Q_i * B_{ip} * D_{aipj} e^{-\lambda_i t_p}$$

Where,

B_{ip} = the equilibrium bioaccumulation factor for nuclide "i" in pathway "p", expressed as ρCi L / kg ρCi. The factors are located within the MIDAS code and are taken from Table A-1 of Reg. Guide 1.109. See Attachment 3.1, Dose Factors for Various Pathways.

t_p = the average transit time required for nuclides to reach the point of exposure, 24 hours. This allows for decay during transit through the food chain, as well as during food preparation. Given as #26 of parameter 4 in MIDEL. (t_p = 24 hours)

M_p = the dilution factor at the point of exposure, 1.0 for Aquatic Foods. Given in parameter 5 of MIDEL as 1.0.

3. Shoreline Deposits (Eq 3)

$$R_{apj} = 110{,}000 * \frac{U_{ap} * W}{M_p * F * 2.23E-3} * \sum_i Q_i * T_i * D_{aipj} \left[e^{-\lambda_i t_p}\right] * \left[1 - e^{-\lambda_i t_b}\right]$$

Where;

W = the shoreline width factor. Given as an input of 0.3 when running the program, based on Table A-2 in Reg. Guide 1.109.

T_i = the radioactive half-life of the nuclide, "i", in days

D_{aipj} = the dose factor for standing on contaminated ground, in mrem m^2 / hr ρCi. The values are taken from table E-6 of Reg. Guide 1.109 and are located within the MIDAS code. See Attachment 3.1, Dose Factors for Various Pathways.

t_b = the period of time for which sediment or soil is exposed to the contaminated water, 1.31E+5 hours. Given in MIDEL as item 6 of parameter 4.

t_p = the average transit time required for nuclides to reach the point of exposure, 0 hours. Given as #28 of parameter 4 in MIDEL.

110,000 = conversion factor yr ft^3 ρCi / Ci sec m^2 day, this accounts for proportionality constant in the sediment radioactivity model

M_p = the dilution factor at the point of exposure (or the point of withdrawal of drinking water or point of harvest of aquatic food). Given in parameter 5 of MIDEL as 2.6.

e. The MIDAS program uses the following plant specific parameters, which are entered by the operator.

1. Irrigation rate = 0
2. Fraction of time on pasture = 0
3. Fraction of feed on pasture = 0
4. Shore width factor = 0.3 (from Reg. Guide 1.109, Table A-2)

f. The results of DS1LI are printed in LDRPT (LP). These results are used in the monthly report of liquid releases.

g. In addition, the program DOSUM (DM) is used to search the results files of DS1LI to find the maximum liquid pathway individual doses. The highest exposures are then printed in a summary table. Each line is compared with the appropriate dose limit. The table provides a concise summary of off-site environmental dose calculations for inclusion in Annual Radioactive Effluent Release Reports, required by Reg. Guide 1.21.

NOTE:	The performance of each surveillance requirement must be within the specified time interval with a maximum allowable extension not to exceed 25% of the specified surveillance interval.

3.2 Limits of Operation and Surveillances of the Effluent Release Points

3.2.1 Radioactive Liquid Effluent Monitoring Instrumentation

a. The radioactive liquid effluent monitoring instrumentation channels shown in Attachment 3.2, Radioactive Liquid Effluent Monitoring Instruments, are operable with their alarm/trip setpoints set to ensure that the limits of step 3.2.3a, Concentration Excluding Releases via the Turbine Room Sump (TRS) Discharge, are not exceeded.

b. The applicability of each channel is shown in Attachment 3.2, Radioactive Liquid Effluent Monitoring Instruments.

c. With a radioactive liquid effluent monitoring instrumentation channel alarm/trip setpoint less conservative than a value which will ensure the limits of step 3.2.3a, Concentration Excluding Releases via the Turbine Room Sump (TRS) Discharge, are met without delay, suspend the release of radioactive liquid effluents monitored by the affected channel and reset or declare the monitor inoperable.

d. With one or more radioactive liquid effluent monitoring instrumentation channels inoperable, take the applicable action shown in Attachment 3.2, Radioactive Liquid Effluent Monitoring Instruments, with a maximum allowable extension not to exceed 25% of the surveillance interval, excluding the initial performance.

e. Determine the setpoints in accordance with the methodology described in step 3.3.1, Liquid Monitors. Record the setpoints.

f. Demonstrate each radioactive liquid effluent monitoring instrumentation channel is operable by performing the CHANNEL CHECK, SOURCE CHECK, CHANNEL CALIBRATION and CHANNEL OPERATIONAL TEST at the frequencies shown in Attachment 3.3, Radioactive Liquid Effluent Monitoring Instrumentation Surveillance Requirements.

BASES – LIQUID

The radioactive liquid effluent instrumentation is provided to monitor and control, as applicable, the releases of radioactive materials in liquid effluents during actual or potential releases. The alarm/trip setpoints for these instruments shall be calculated in accordance with NRC approved methods in the ODCM to ensure the alarm/trip will occur prior to exceeding the limits of 10 CFR Part 20. The OPERABILITY and use of this instrumentation is consistent with the requirements of General Design Criteria specified in Section 11.3 of the Final Safety Analysis Report for the Donald C. Cook Nuclear Plant. Due to the location of the Westinghouse ESW monitors, outlet line of containment spray heat exchanger (typically out of service), weekly sampling is required of the ESW system for radioactivity. This is necessary to ensure monitoring of a CCW to ESW system leak. [Ref 5.2.1gg]

3.2.2 Radioactive Gaseous Effluent Monitoring Instrumentation

a. The radioactive gaseous process and effluent monitoring instrumentation channels shown in Attachment 3.4, Radioactive Gaseous Effluent Monitoring Instrumentation, are operable with their alarm/trip setpoints set to ensure that the limits of step 3.2.4a, Dose Rate, are not exceeded.

b. The applicability of each channel is shown in Attachment 3.4, Radioactive Gaseous Effluent Monitoring Instrumentation.

c. With a radioactive gaseous process or effluent monitoring instrumentation channel alarm/trip setpoint less conservative than a value which will ensure that the limits of step 3.2.4a, Dose Rate, are met, without delay, suspend the release of radioactive gaseous effluents monitored by the affected channel and reset or declare the channel inoperable.

d. With less than the minimum number of radioactive gaseous effluent monitoring instrumentation channels operable, take the action shown in Attachment 3.4, Radioactive Gaseous Effluent Monitoring Instrumentation, with a maximum allowable extension not to exceed 25% of the surveillance interval, excluding the initial performance.

NOTE:	This surveillance requirement does not apply to the waste gas holdup system hydrogen and oxygen monitors, as their setpoints are not addressed in this document.

e. Determine the setpoints in accordance with the methodology as described in step 3.3.2, Gaseous Monitors. Record the setpoints.

f. Demonstrate each radioactive gaseous process or effluent monitoring instrumentation channel is operable by performing the CHANNEL CHECK, SOURCE CHECK, CHANNEL CALIBRATION, and CHANNEL OPERATIONAL TEST operations at the frequencies shown in Attachment 3.5, Radioactive Gaseous Effluent Monitoring Instrumentation Surveillance Requirements.

BASES – GASEOUS

The radioactive gaseous effluent instrumentation is provided to monitor and control, as applicable, the releases of radioactive materials in gaseous effluents during actual or potential releases. The alarm/trip setpoints for these instruments shall be calculated in accordance with NRC approved methods in the ODCM to ensure the alarm/trip will occur prior to exceeding the limits of 10 CFR Part 20. The OPERABILITY and use of this instrumentation is consistent with the requirements of General Design Criteria specified in Section 11.3 of the Final Safety Analysis Report for the Donald C. Cook Nuclear Plant.

3.2.3 Liquid Effluents

a. Concentration Excluding Releases via the Turbine Room Sump (TRS) Discharge

1. Limit the concentration of radioactive material released via the Batch Release Tanks or Plant Continuous Releases (excluding only TRS discharge to the Absorption Pond) to unrestricted areas to the concentrations in 10 CFR 20, Appendix B, Table 2, Column 2, for radionuclides other than dissolved or entrained noble gases. For dissolved or entrained noble gases, limit the concentration to 2E-4 μCi/ml total activity.

2. With the concentration of radioactive material released from the site via the Batch Release Tanks or Plant Continuous Releases (other than the TRS to the Absorption Pond) exceeding the above limits, without delay restore the concentration to within the above limits.

3. Sample and analyze radioactive liquid wastes according to the sampling and analysis program of Attachment 3.6, Radioactive Liquid Waste Sampling and Analysis Program.

4. Use the results of radioactive analysis in accordance with the methods of this document to assure that all concentrations at the point of release are maintained within limits.

b. Concentration of Releases from the TRS Discharge

1. Limit releases via the TRS discharge to the on-site Absorption Pond to the concentrations specified in 10 CFR 20, Appendix B, Table 2, Column 2. For dissolved or entrained noble gases, limit the concentration to 2E-4 μCi/ml total activity.

2. With releases from the TRS exceeding the above limits, perform a dose projection due to liquid releases to UNRESTRICTED AREAS to determine if the limits of step 3.2.3c.1 have been exceeded. If the dose limits have been exceeded, follow the directions in step 3.2.3c.2, as applicable.

3. Sample and analyze radioactive liquid wastes according to the program in Attachment 3.6, Radioactive Liquid Waste Sampling and Analysis Program.

4. Use the results of radioactive analysis in accordance with the methods of this document to assure that all concentrations at the point of release are maintained within the limits stated above.

c. Dose

1. Limit the dose or dose commitment to an individual from radioactive material in liquid effluents released to unrestricted areas during any calendar quarter to ≤ 1.5 mrem/unit to the total body and to ≤ 5 mrem/unit to any organ, and during any calendar year to ≤ 3 mrem/unit to the total body and to ≤ 10 mrem/unit to any organ.

2. With the calculated release of radioactive materials in liquid effluents exceeding ten times any of the limits in Steps 3.2.3a or 3.2.3b, or exceeding 3.2.3c.1 above, prepare and submit a Written Report, pursuant to 10 CFR 20.2203, within 30 days after learning of the event. This report must describe the extent of exposure of individuals to radiation and radioactive material, including, as appropriate:

   a) Estimate of each individual's dose. This is to include the radiological impacts on finished drinking water supplies with regard to the requirements of 40 CFR 141, Safe Drinking Water Act (applicable due to Lake Township water treatment facility),
   b) Levels of radiation and concentration of radioactive material involved,
   c) Cause of elevated exposures, dose rates or concentrations,
   -AND-
   d) Corrective steps taken or planned to ensure against recurrence, including schedule for achieving conformance with applicable limits.

   These reports must be formatted in accordance with PMP-7030-001-002, Licensee Event Reports, Special and Routine Reports, even though this is not an LER.

3. Determine cumulative and projected dose contributions from liquid effluents in accordance with this document at least once per 31 days. Dose may be projected based on estimates from previous monthly projections and current or future plant conditions.

d. Liquid Radwaste Treatment System

1. Use the liquid radwaste treatment system to reduce the radioactive materials in liquid wastes prior to their discharge when the projected doses due to the liquid effluent from the site when averaged over 31 days, would exceed 0.06 mrem/unit to the total body or 0.2 mrem/unit to any organ.

2. Project doses due to liquid releases to UNRESTRICTED AREAS at least once per 31 days, in accordance with this document.

e. During times of primary to secondary leakage, the use of the startup flash tank should be minimized to reduce the release of curies from the secondary system and to maintain the dose to the public ALARA. Operation of the North Boric Acid Evaporator (NBAE) should be done in a manner so as to allow the recycle of the distillate water to the Primary Water Storage Tank for reuse. This will provide a large reduction in liquid curies of tritium released to the environment, as there is approximately 40 curies of tritium released with every monitor tank of NBAE distillate.

Drainage of high conductivity water (Component Cooling Water and ice melt water containing sodium tetraborate) shall be evaluated to decide whether it should be drained to waste (small volumes only), the Turbine Room Sump (low activity water only) or routed without demineralization processing to a monitor tank for release. This is necessary in order to minimize the detrimental affect that high conductivity water has on the radioactive wastewater demineralization system. The standard concentration and volume equation can be utilized to determine the impact on each method and is given here. The units for concentration and volume need to be consistent across the equation:

$$(C_i)(V_i)+(C_a)(V_a)=(C_t)(V_t)$$

Where;

C_i = the initial concentration of the system being added to
V_i = the initial volume of the system being added to
C_a = the concentration of the water that is being added to the system
V_a = the volume of the water that is being added to the system
C_t = the final concentration of the system after the addition
V_t = the final volume of the system after the addition

The intent is to keep the:

- WDS below 500 μmhos/cc.
- TRS below 1E-5 μC/cc.
- Monitor Tank release ALARA to members of the public.

Wastewater leakage into the liquid waste disposal system will be monitored routinely. In the event the leak rate is determined to be over two gallons per minute (the assumed plant design leakage based on the original 2 gpm waste evaporator), increased scrutiny will be placed on locating inleakage, timeliness of job order activities, and/or activities causing increased production of waste water.

BASES - CONCENTRATION

This specification is provided to ensure the concentration of radioactive materials released in liquid waste effluents from the site to unrestricted areas will be less than the concentration levels specified in 10 CFR Part 20, Appendix B, Table 2. This limitation provides additional assurance that the levels of radioactive materials in bodies of water outside the site will not result in exposures greater than 1) the Section II.A design objectives of Appendix I, 10 CFR Part 50, to an individual and 2) the limits of 10 CFR Part 20. The concentration limit for noble gasses is based upon the assumption that Xe-135 is the controlling radionuclide and its Effluent Concentration Unit in air (submersion) was converted to an equivalent concentration in water using the methods described in the International Commission on Radiological Protection (ICRP) Publication 2.

DOSE

This specification is provided to implement the requirements of Sections II.A, III.A, and IV.A of Appendix I, 10 CFR Part 50. The dose limits implement the guides set forth in Section II.A of Appendix I. The ACTION statements provide the required operating flexibility and at the same time, implement the guides set forth in Section IV.A of Appendix I to assure the releases of radioactive material in liquid effluents will be kept "as low as is reasonably achievable". Also, for fresh water sites with drinking water supplies which can be potentially affected by plant operations, there is reasonable assurance that the operation of the facility will not result in radionuclide concentrations in the finished drinking water that are in excess of the requirements of 40 CFR 141. The dose calculations in the ODCM implement the requirements in Section III.A of Appendix I that conformance with the guides of Appendix I be shown by calculational procedures based on models and data such that the actual exposure of an individual through appropriate pathways is unlikely to be substantially underestimated. The equations specified in the ODCM for calculating the doses due to the actual release rates of radioactive materials in liquid effluents, will be consistent with the methodology provided in Regulatory Guide 1.109, "Calculation of Annual Doses to Man from Routine Releases of Reactor Effluents for the Purpose of Evaluating Compliance with 10 CFR Part 50, Appendix I", Revision 1, October 1977, and Regulatory Guide 1.113, "Estimating Aquatic Dispersion of Effluents from Accidental and Routine Reactor Releases for the Purpose of Implementing Appendix I", April 1977. NUREG-0133 provides methods for dose calculations consistent with Regulatory Guide 1.109 and 1.113.

This specification applies to the release of liquid effluents from each reactor at the site. The liquid effluents from the shared system are proportioned among the units sharing the system.

LIQUID WASTE TREATMENT

The operability of the liquid radwaste treatment system ensures that this system will be available for use whenever liquid effluents require treatment prior to release to the environment. The requirements that the appropriate portions of this system be used when specified provide assurance that the releases of radioactive materials in liquid effluents will be kept "as low as is reasonably achievable". This specification implements the requirements of 10 CFR Part 50.36a, General Design Criteria Section 11.1 of the Final Safety Analysis Report for the Donald C. Cook Nuclear Plant, and design objective Section II.D of Appendix I to 10 CFR Part 50. The specified limits governing the use of appropriate portions of the liquid radwaste treatment system were specified as a suitable fraction of the dose design objectives set forth in Section II.A of Appendix I, 10 CFR Part 50, for liquid effluents.

3.2.4 Gaseous Effluents

a. Dose Rate

1. Limit the dose rate due to radioactive materials released in gaseous effluents from the site to ≤ 500 mrem/yr to the total body and ≤ 3000 mrem/yr to the skin for noble gases. Limit the dose rate due to all radioiodines and for all radioactive materials in particulate form and radionuclides (other than noble gases) with half-lives greater than eight days to ≤ 1500 mrem/yr to any organ.

2. With the dose rate(s) exceeding the above limits, without delay decrease the release rate to within the above limit(s).

3. Determine the dose rate due to noble gases in gaseous effluents to be within the above limits in accordance with the methods and procedures described in this document.

4. Determine the dose rate due to radioactive materials, other than noble gases, in gaseous effluents to be within the above limits in accordance with the methods and procedures of this document by obtaining representative samples and performing analyses in accordance with the sampling and analysis program in Attachment 3.7, Radioactive Gaseous Waste Sampling and Analysis Program.

b. Dose - Noble Gases

1. Limit the air dose in unrestricted areas due to noble gases released in gaseous effluents during any calendar quarter, to ≤ 5 mrad/unit for gamma radiation and ≤ 10 mrad/unit for beta radiation and during any calendar year, to ≤ 10 mrad/unit for gamma radiation and ≤ 20 mrad/unit for beta radiation.

2. With the calculated air dose from radioactive noble gases in gaseous effluents exceeding any of the above limits, prepare and submit a Written Report, pursuant to 10 CFR 20.2203 and addressed in step 3.2.3c.2, within 30 days after learning of the event.

3. Determine cumulative and projected dose contributions for the total time period in accordance with this document at least once every 31 days.

c. Dose – Iodine-131, Iodine-133, Tritium, and Radioactive Material in Particulate Form

1. Limit the dose to a MEMBER OF THE PUBLIC from radioiodine, radioactive materials in particulate form, and radionuclides other than noble gases with half-lives greater than eight days in gaseous effluents released to unrestricted areas (site boundary) to the following:

a) During any calendar quarter to less than or equal to 7.5 mrem/unit to any organ

b) During any calendar year to less than or equal to 15 mrem/unit to any organ.

2. With the calculated dose from the release of radioiodines, radioactive materials in particulate form, or radionuclides other than noble gases in gaseous effluents exceeding any of the above limits, prepare and submit a Written Report, pursuant to 10 CFR 20.2203 and addressed in step 3.2.3c.2, within 30 days after learning of the event.

3. Determine cumulative and projected dose contributions for the total time period in accordance with this document at least once every 31 days.

d. Gaseous Radwaste Treatment

1. Use the gaseous radwaste treatment system and the ventilation exhaust treatment system to reduce radioactive materials in gaseous wastes prior to their discharge when projected gaseous effluent air doses due to gaseous effluent releases to unrestricted areas when averaged over 31 days, would exceed 0.2 mrad/unit for gamma radiation and 0.4 mrad/unit for beta radiation. Use the ventilation exhaust treatment system to reduce radioactive materials in gaseous waste prior to their discharge when the projected doses due to gaseous effluent releases to unrestricted areas when averaged over 31 days would exceed 0.3 mrem/unit to any organ.

2. Project doses due to gaseous releases to UNRESTRICTED AREAS at least once per 31 days in accordance with this document.

BASES – GASEOUS EFFLUENTS

This specification provides reasonable assurance that radioactive material discharged in gaseous effluents will not result in the exposure of a Member of the Public in an unrestricted area, either at or beyond the site boundary in excess of the design objectives of appendix I to 10 CFR 50. This specification is provided to ensure that gaseous effluents from all units on the site will be appropriately controlled. It provides operational flexibility for releasing gaseous effluents to satisfy the Section II.A and II.C design objectives of appendix I to 10 CFR 50. For individuals who may at times be within the site boundary, the occupancy of the individual will be sufficiently low to compensate for any increase in the atmospheric diffusion factor above that for the site boundary. The specified instantaneous release rate limits restrict, at all times, the corresponding gamma and beta dose rates above background to an individual at or beyond the site boundary to ≤ 500 mrem/yr to the total body or to ≤ 3000 mrem/yr to the skin. These instantaneous release rate limits also restrict, at all times, the corresponding thyroid dose rate above background to a child via the inhalation pathway to ≤ 1500 mrem/yr. Limitations on the dose rate resulting from radioactive material released in gaseous effluents to areas beyond the site boundary conforming to the doses associated with 10 CFR 20, Appendix B, Table 2, Column 1.

This specification applies to the release of gaseous effluents from all reactors at the site. The gaseous effluents from the shared system are proportioned among the units sharing that system.

DOSE, NOBLE GASES

This specification is provided to implement the requirements of Sections II.B, III.A, and IV.A of Appendix I, 10 CFR Part 50. The dose limits implement the guides set forth in Section II.B of Appendix I.

The ACTION statements provide the required operating flexibility and at the same time implement the guides set forth in section IV.A of Appendix I to assure that the releases of radioactive material in gaseous effluents will be kept "as low as is reasonably achievable". The Surveillance Requirements implement the requirements in Section III.A of Appendix I that conform with the guides of Appendix I to be shown by calculational procedures based on models and data such that the actual exposure of an individual through the appropriate pathways is unlikely to be substantially underestimated. The dose calculations established in the ODCM for calculating the doses due to the actual release rates of radioactive noble gases in gaseous effluents will be consistent with the methodology provided in Regulatory Guide 1.109, "Calculation of Annual Doses to Man from Routine Releases of Reactor Effluents for the Purpose of Evaluating Compliance with 10 CFR Part 50, Appendix I", Revision 1, October 1977 and Regulatory Guide 1.111, "Methods for Estimating Atmospheric Transport and Dispersion of Gaseous Effluents in Routine Releases from Light-Water-Cooled Reactors", Revision 1, July 1977. The ODCM equations provided for determining the air doses at the site boundary will be based upon the historical average atmospherical conditions. NUREG-0133 provides methods for dose calculations consistent with Regulatory Guides 1.109 and 1.111.

DOSE, RADIOIODINES, RADIOACTIVE MATERIAL IN PARTICULATE FORM, AND RADIONUCLIDES OTHER THAN NOBLE GASES

This specification is provided to implement the requirements of Sections II.C, III.A, and IV.A of Appendix I, 10 CFR Part 50. The dose limits are the guides set forth in Section II.C of Appendix I.

The ACTION statements provide the required operating flexibility and at the same time implement the guides set forth in section IV.A of Appendix I to assure that the releases of radioactive material in gaseous effluents will be kept "as low as is reasonably achievable". The ODCM calculational methods specified in the surveillance requirements implement the requirements in Section III.A of Appendix I that conform with the guides of Appendix I to be shown by calculational procedures based on models and data such that the actual exposure of an individual through the appropriate pathways is unlikely to be substantially underestimated. The ODCM calculational methods approved by the NRC for calculating the doses due to the actual release rates of the subject materials are required to be consistent with the methodology provided in Regulatory Guide 1.109, "Calculation of Annual Doses to Man from Routine Releases of Reactor Effluents for the Purpose of Evaluating Compliance with 10 CFR Part 50, Appendix I", Revision 1, October 1977 and Regulatory Guide 1.111, "Methods for Estimating Atmospheric Transport and Dispersion of Gaseous Effluents in Routine Releases from Light-Water-Cooled Reactors", Revision 1, July 1977. These equations also provide the methodology for determining the actual doses based upon the historical average atmospheric conditions. The release rate specifications for radioiodines, radioactive material in particulate form, and radionuclides, other than noble gases, are dependent on the existing radionuclide pathways to man, in the unrestricted area. The pathways which are examined in the development of these calculations are: 1) individual inhalation of airborne radionuclides, 2) deposition of radionuclides onto green leafy vegetation with subsequent consumption by man, 3) deposition onto grassy areas where milk animals and meat producing animals graze with consumption of the milk and meat by man, and 4) deposition on the ground with subsequent exposure of man.

GASEOUS WASTE TREATMENT

The operability of the gaseous radwaste treatment system and the ventilation exhaust treatment systems ensures that the systems will be available for use whenever gaseous effluents require treatment prior to release to the environment. The requirement that the appropriate portions of these systems be used when specified provides reasonable assurance that the releases of radioactive materials in gaseous effluents will be kept "as low as is reasonably achievable". This specification implements the requirements of 10 CFR Part 50.36a, General Design Criterion Section 11.1 of the Final Safety Analysis Report for the Donald C. Cook Nuclear Plant, and design objective Section II.D of Appendix I to 10 CFR Part 50. The specified limits governing the use of appropriate portions of the systems were specified as a suitable fraction of the guides forth in Sections II.B and II.C of Appendix I, 10 CFR Part 50, for gaseous effluents.

3.2.5 Radioactive Effluents - Total Dose

a. The dose or dose commitment to a real individual from all uranium fuel cycle sources is limited to ≤ 25 mrem to the total body or any organ (except the thyroid, which is limited to ≤ 75 mrem) over a period of 12 consecutive months.

b. With the calculated doses from the release of radioactive materials in liquid or gaseous effluents exceeding twice the limits of steps 3.2.3c (Dose), 3.2.4b (Dose - Noble Gases), or 3.2.4c (Dose – Iodine-131, Iodine-133, Tritium, and Radioactive Material in Particulate Form) during any calendar quarter, perform the following:

- Investigate and identify the causes for such release rates;
- Define and initiate a program for corrective action;
- Report these actions to the NRC within 30 days from the end of the quarter during which the release occurred.

IF the estimated dose(s) exceeds the limits above, and **IF** the release condition resulting in violation has not already been corrected prior to violation of 40 CFR 190, **THEN** include in the report a request for a variance in accordance with the provisions of 40 CFR 190 and including the specified information of paragraph 190.11(b). Submittal of the report is considered a timely request, and a variance is granted until staff action on the request is complete. The variance only relates to the limits of 40 CFR 190, and does not apply in any way to the requirements for dose limitation of 10 CFR 50, as addressed in other sections of this document.

c. Determine cumulative dose contributions from liquid and gaseous effluents in accordance with this document (including steps 3.2.3c [Dose], 3.2.4b [Dose - Noble Gases], or 3.2.4c [Dose – Iodine-131, Iodine-133, Tritium, and Radioactive Material in Particulate Form]).

BASES -- TOTAL DOSE

This specification is provided to meet the dose limitations of 40 CFR 190. The specification requires the preparation and submittal of a Special Report whenever the calculated doses from plant radioactive effluents exceed twice the design objective doses of Appendix I. For sites containing up to 4 reactors, it is highly unlikely that the resultant dose to a member of the public will exceed the dose limits of 40 CFR 190 if the individual reactors remain within the reporting requirement level. The Special Report will describe a course of action, which should result in the limitations of dose to a member of the public for 12 consecutive months to within the 40 CFR 190 limits. For the purposes of the Special Report, it may be assumed that the dose commitment to any member of the public from other uranium fuel cycle sources is negligible with the exception that dose contributions from other nuclear fuel cycle facilities at the same site or within a radius of 5 miles must be considered. If the dose to any member of the public is estimated to exceed the requirements of 40 CFR 190, the Special Report with a request for a variance (provided the release conditions resulting in violation of 40 CFR 190 have not already been corrected, in accordance with the provision of 40 CFR 190.11), is considered to be a timely request and fulfills the requirements of 40 CFR 190 until NRC staff action is completed. An individual is not considered a member of the public during any period in which he/she is engaged in carrying out any operation, which is part of the nuclear fuel cycle.

3.3 Calculation of Alarm/Trip Setpoints

The alarm and trip setpoints are to provide monitoring, indication, and control of liquid and gaseous effluents. The setpoints are used in conjunction with sampling programs to assure that the releases are kept within the limits of 10 CFR 20, Appendix B, Table 2. Establish setpoints for liquid and gaseous monitors. Depending on the monitor function, it would be a continuous or batch monitor. The different types of monitors are subject to different setpoint methodologies.

One variable used in setpoint calculations is the multiple release point (MRP) factor. The MRP is a factor used such that when all the releases are integrated, the applicable LIMIT value will not be exceeded. The MRP is determined such that the sum of the MRP's for that effluent type (liquid or gaseous) is less than or equal to 1. The value of the MRP is arbitrary, and it should be assigned based on operational performance. The values of the MRP's for each liquid release point are given in Attachment 3.8, Multiple Release Point Factors for Release Points.

The Site stance on instrument uncertainty is taken from HPPOS-223, Consideration of Measurement Uncertainty When Measuring Radiation Levels Approaching Regulatory Limits, which states the NRC position is the result of a valid measurement obtained by a method, which provides a reasonable demonstration of compliance. This value should be accepted and the uncertainty in that measured value need not be considered.

3.3.1 Liquid Monitors

Establish liquid monitor setpoints for each monitor of the liquid effluent release systems. A schematic of the liquid effluent release systems is shown as Attachment 3.9, Liquid Effluent Release Systems. A list of the Plant Liquid Effluent Parameters is in Attachment 3.10, Plant Liquid Effluent Parameters. The details of each system design and operation can be found in the system descriptions. The setpoints are intended to keep releases within the limits of 10 CFR 20, Appendix B, Table 2, Column 2. Determine setpoints using either the batch or the continuous methodology.

a. Liquid Batch Monitor Setpoint Methodology

1. There is only one monitor used on the Waste Disposal System for liquid batch releases. This monitor is identified as RRS-1000. Steam Generator Blowdown radiation monitors also can be used to monitor batch releases while draining steam generators. The function of these monitors is to act as a check on the sampling program. The sampling program determines the nuclides and concentrations of those nuclides prior to release. The discharge and dilution flow rates are then adjusted to keep the release within the limits of 10 CFR 20. Based on the concentrations of nuclides in the release, the count rate on the monitor can be predicted. The high alarm setpoint can then be set above the predicted value up to the maximum setpoint of the system.

2. The radioactive concentration of each batch of radioactive liquid waste to be discharged is determined prior to each release by sampling and analysis in accordance with Attachment 3.6, Radioactive Liquid Waste Sampling and Analysis Program.

3. The allowable release flow rates are determined in order to keep the release concentrations within the requirements of 10 CFR 20, Appendix B, Table 2, Column 2. The equation to calculate the flow rate is from Addendum AA1 of NUREG-0133:

$$\left[\Sigma \frac{C_i}{LIMIT_i}\right] * \frac{f}{MRP} \leq F + f$$

Where;

C_i = the concentration of nuclide "i" in μCi/ml

$LIMIT_i$ = the 10 CFR 20, Appendix B, Table 2, Column 2 limit of nuclide "i" in μCi/ml

f = the effluent flow rate in gpm (Attachment 3.10, Plant Liquid Effluent Parameters)

F = the dilution water flow rate as estimated prior to release. The dilution flow rate is a multiple of 230,000 gpm depending on the number of circulation pumps in operation.

MRP = the multiple release point factor. A factor such that when all the release points are operating at one time the limits of 10 CFR 20 will not be exceeded.

4. This equation must be true during the batch release. Before the release is started, substitute the maximum effluent flow rate and the minimum dilution flow rate for f and F, respectively. If the equation is true, the release can proceed with those flow rates as the limits of operation. If the equation is not true, the effluent flow rate can be reduced or the dilution flow rate can be increased to make the equation true. This equation may be rearranged to solve for the maximum effluent release flow rate (f).

5. The setpoint is used as a quality check on the sampling program. The setpoint is used to stop the effluent flow when the monitor reading is greater than the predicted value from the sampling program. The predicted value is generated by converting the effluent concentration for each gamma emitting radionuclide to counts per unit of time as per Attachment 3.11, Volumetric Detection Efficiencies for Principle Gamma Emitting Radionuclides for Eberline Liquid Monitors, or Attachment 3.12, Counting Efficiency Curves for R-19, and R-24. The sum of all the counts per unit of time is the predicted count rate. The predicted count rate can then be multiplied by a factor to determine the high alarm setpoint that will provide a high degree of conservatism and eliminate spurious alarms.

b. Liquid Continuous Monitor Setpoint Methodology

1. There are eight monitors used as potential continuous liquid release monitors. These monitors are used in the steam generator blowdown (SGBD), blowdown treatment (BDT), and essential service water (ESW) systems.

2. These Westinghouse monitors (R) are being replaced by Eberline monitors (DRS) and are identified as:

- R-19 or DRS 3100/4100 for SGBD
- R-24 or DRS 3200/4200 for BDT

The function of these monitors is to assure that releases are kept within the concentration limits of 10 CFR 20, Appendix B, Table 2, Column 2, entering the unrestricted area following dilution.

3. The monitors on steam generator blowdown and blowdown treatment systems have trip functions associated with their setpoints. Essential service water monitors are equipped with an alarm function only and monitor effluent in the event the Containment Spray Heat Exchangers are used.

4. The equation used to determine the setpoint for continuous monitors is from Addendum AA1 of NUREG-0133:

$$S_p \leq \frac{C * Eff * MRP * F * SF}{f}$$

Where;

S_p = setpoint of monitor (cpm)

C = 5E-7 μCi/ml, maximum effluent control limit from 10 CFR 20, Appendix B, Table 2, Column 2 of a known possible nuclide in effluent stream. (The limiting nuclide shall be evaluated annually by reviewing current nuclides against historical ones in order to determine if one with a more restrictive effluent concentration limit than Sr90 is found. The concentration limit shall be adjusted appropriately.)

-OR-

if a mixture is to be specified,

$$\frac{\Sigma C_i}{\Sigma \frac{C_i}{LIMIT_i}}$$

Eff = Efficiency, this information is located in Attachment 3.11, Volumetric Detection Efficiencies for Principle Gamma Emitting Radionuclides for Eberline Liquid Monitors, through Attachment 3.13, Counting Efficiency Curve for R-20, and R-28, for the specific monitors. For Eberline monitors the efficiency is nuclide specific and the calculation changes slightly to:

$$\frac{\Sigma(C_i * Eff_i)}{\Sigma \frac{C_i}{LIMIT_i}} \; replaces \; C * Eff$$

MRP = multiple release point factor. A factor such that when all the release points are operating at one time the limits of 10 CFR 20 will not be exceeded (Attachment 3.8, Multiple Release Point Factors for Release Points). The MRP for ESW monitors is set to 1.

F = dilution water (circ water) flow rate in gpm obtained from Attachment 3.10, Plant Liquid Effluent Parameters. For routine operation, the setpoint should be calculated using the minimum dilution flow rate of 230,000 gpm.

SF = Safety Factor, 0.9.

f = applicable effluent release flow rate in gpm. For routine operation, the setpoint should be calculated using maximum effluent flow rate (Attachment 3.10, Plant Liquid Effluent Parameters).

3.3.2 Gaseous Monitors

For the purpose of implementing Step 3.2.2, Radioactive Gaseous Effluent Monitoring Instrumentation, and Substep 3.2.4a, Dose Rate, the alarm setpoints for gaseous effluents released into unrestricted areas will be established using the following methodology. In addition, the above steps do not apply to instantaneous alarm and trip setpoints for integrating radiation monitors sampling radioiodines, radioactive materials in particulate form and radionuclides other than noble gases. A schematic of the gaseous effluent release systems is presented in Attachment 3.14, Gaseous Effluent Release Systems. Attachment 3.15, Plant Gaseous Effluent Parameters, presents the effluent flow rate parameter(s).

Gaseous effluent monitor high alarm setpoints will routinely be established at a fraction of the maximum allowable setpoint (typically 10% of the setpoint) for ALARA purposes. Alert alarms will normally be set to provide adequate indications of small changes in radiological conditions.

NOTE:	**IF** the setpoint calculation methodology changes or the associated factors change for Unit Vent, Air Ejector and/or Gland Seal monitors, **THEN** initiate a review by Emergency Planning to ensure that the requirements of 10 CFR 50.54 (q) are maintained.

a. Plant Unit Vent

1. The gaseous effluents discharged from the plant vent will be monitored by the plant vent radiation monitor low range noble gas channel [Tag No. VRS-1505 (Unit 1), VRS-2505 (Unit 2)] to assure that applicable alarms and trip actions (isolation of gaseous release) will occur prior to exceeding the limits in step 3.2.4, Gaseous Effluents. The alarm setpoint values will be established using the following unit analysis equation:

$$S_p = \frac{SF * MRP * DL_j}{F_p * \overline{\chi/Q} * \sum_i (W_i * DCF_{ij})}$$

Where;

S_p = the maximum setpoint of the monitor in μCi/cc for release point p, based on the most limiting organ

SF = an administrative operation safety factor, less than 1.0

MRP = a weighted multiple release point factor (≤ 1.0), such that when all site gaseous releases are integrated, the applicable dose will not be exceeded based on the release rate of each effluent point. The MRP is an arbitrary value based on the ratio of the release rate or the volumetric flow rate of each effluent point to the total respective flow rate value of the plant and will be consistent with past operational experience. The MRP is computed as follows:

- Compute the average release rate, Q_p, (or the volumetric flow rate, f_p) from each release point p.
- Compute ΣQp (or Σfp) for all release points.
- Ratio Qp/ΣQp (or fp/Σfp) for each release point. This ratio is the MRP for that specific release point
- Repeat the above bullets for each of the site's eight gaseous release points.

F_p = the maximum volumetric flow rate of release point "p", at the time of the release, in cc/sec. The maximum Unit Vent flow rate, by design, is 186,600 cfm for Unit 1 and 143,400 cfm for Unit 2.

DL_j = dose rate limit to organ "j" in an unrestricted area (mrem/yr).

Based on continuous releases, the dose rate limits, DL_j, from step 3.2.4a, Dose Rate, are as follows:

- Total Body ≤ 500 mrem/year
- Skin ≤ 3000 mrem/year
- Any Organ≤ 1500 mrem/year

$\overline{\chi / Q}$ = The worst case annual average relative concentration in the applicable sector or area, in sec/m^3 (see Attachment 3.16, 10 Year Average of 1995-2004 Data).

W_i = weighted factor for the radionuclide:

$$W_i = \frac{C_i}{\Sigma C_k}$$

Where,

C_i = concentration of the most abundant radionuclide "i"

C_k = total concentration of all identified radionuclides in that release pathway. For batch releases, this value may be set to 1 for conservatism.

DCF_{ij} = dose conversion factor used to relate radiation dose to organ "j", from exposure to radionuclide "i" in mrem m^3 / yr μCi. See following equations.

The dose conversion factor, DCF_{ij}, is dependent upon the organ of concern.

For the whole body: $DCF_{ij} = K_i$

Where;

K_i = whole body dose factor due to gamma emissions for each identified noble gas radionuclide in mrem m^3 / yr μCi. See Attachment 3.18, Dose Factors.

For the skin: $DCF_{ij} = L_i + 1.1M_i$

Where;

L_i = skin dose factor due to beta emissions for each identified noble gas radionuclide, in mrem m^3 / yr μCi. See Attachment 3.18, Dose Factors.

1.1 = the ratio of tissue to air absorption coefficient over the energy range of photons of interest. This ratio converts absorbed dose (mrad) to dose equivalent (mrem).

M_i = the air dose factor due to gamma emissions for each identified noble gas radionuclide in mrad m^3 / yr μCi. See Attachment 3.18, Dose Factors.

For the thyroid, via inhalation: $DCF_{ij} = P_i$

Where;

P_i = the dose parameter, for radionuclides other than noble gas, for the inhalation pathway in mrem m^3 / yr μCi (and the food and ground path, as appropriate). See Attachment 3.18, Dose Factors.

2. The plant vent radiation monitor low range noble gas high alarm channel setpoint, S_p, will be set such that the dose rate in unrestricted areas to the whole body, skin and thyroid (or any other organ), whichever is most limiting, will be less than or equal to 500 mrem/yr, 3000 mrem/yr, and 1500 mrem/yr respectively.

3. The thyroid dose is limited to the inhalation pathway only.

4. The plant vent radiation monitor low range noble gas setpoint, S_p, will be recomputed whenever gaseous releases like Containment Purge, Gas Decay Tanks and CVCS HUTs are discharged through the plant vent to determine the most limiting organ.

5. The high alarm setpoint, S_p, may be established at a lower value than the lowest computed value via the setpoint equation.

6. Containment Pressure Reliefs will not have a recomputed high alarm setpoint, but will use the normal high alarm setpoint due to their randomness and the time constraints involved in recomputation.

7. At certain times, it may be desirable to increase the high alarm setpoint, if the vent flow rate is decreased. This may be accomplished in one of two ways.

$$\frac{\text{Max } Conc\ (\mu Ci/cc) * \text{Max } Flowrate\ (cfm)}{New \text{ Max } Concentration\ (\mu Ci/cc)} = New \text{ Max } cfm$$

-OR-

$$\frac{\text{Max } Conc\ (\mu Ci/cc) * \text{Max } Flowrate\ (cfm)}{New \text{ Max } Flowrate\ (cfm)} = New \text{ Max } \mu Ci/cc$$

b. Waste Gas Storage Tanks

1. The gaseous effluents discharged from the Waste Gas System are monitored by the vent stack monitors VRS-1505 and VRS-2505.

2. In the event of a high radiation alarm, an automatic termination of the release from the waste gas system will be initiated from the plant vent radiation monitor low range noble gas channel (VRS-1505 or VRS-2505). Therefore, for any gaseous release configuration, which includes normal operation and waste gas system gaseous discharges, the alarm setpoint of the plant vent radiation monitor will be recomputed to determine the most limiting organ based on all gaseous effluent source terms.

   Chemical and Volume Control System Hold Up Tanks (CVCS HUT), containing high gaseous oxygen concentrations, may be released under the guidance of waste gas storage tank utilizing approved Operations' procedures.

3. It is normally prudent to allow 45 days of decay prior to releasing a Gas Decay Tank (GDT). There are extenuating, operational circumstances that may prevent this from occurring. Under these circumstances, such as high oxygen concentration creating a combustible atmosphere, it is prudent to waive the 45-day decay for safety's sake.

c. Containment Purge and Exhaust System

1. The gaseous effluents discharged by the Containment Purge and Exhaust Systems and Instrumentation Room Purge and Exhaust System are monitored by the plant vent radiation monitor noble gas channels (VRS-1505 for Unit 1, VRS-2505 for Unit 2); and alarms and trip actions will occur prior to exceeding the limits in step 3.2.4a, Dose Rate.

2. For the Containment System, a continuous air sample from the containment atmosphere is drawn through a closed, sealed system to the radiation monitors (Tag No. ERS-1300/1400 for Unit 1 and ERS-2300/2400 for Unit 2). During purges, these monitor setpoints will give a Purge and Exhaust Isolation signal upon actuation of high alarm setpoints for particulate and noble gas channels. The sample is then returned to containment. Grab sample analysis is performed for a Containment purge before release.

3. The Upper Containment area is monitored by normal range area gamma monitors (Tag No. VRS-1101/1201 for Unit 1 and VRS-2101/2201 for Unit 2), which also give Purge and Exhaust Isolation Trip signals upon actuation of their high alarm.

4. For the Containment Pressure Relief System, no sample is routinely taken prior to release, but a sample is obtained twice per month.

5. The containment airborne and area monitors, upon actuation of their high alarm, will automatically initiate closure of the Containment and Instrument Room purge supply and exhaust duct valves and containment pressure relief system valves. Complete trip of all isolation control devices requires high alarm of one of the two Train A monitors (ERS-1300/2300 or VRS-1101/2101) and one of the two Train B monitors (ERS-1400/2400 or VRS-1201/2201).

d. Steam Jet Air Ejector System (SJAE)

1. The gaseous effluents from the Steam Jet Air Ejector System discharged to the environment are continuously monitored by radiation monitor (Tag No. SRA-1900 for Unit 1 and SRA-2900 for Unit 2). The monitor will alarm prior to exceeding the limits of step 3.2.4a, Dose Rate. The alarm setpoint for the Condenser Air Ejector System monitor will be based on the maximum air ejector exhaust flow rate, (Attachment 3.15, Plant Gaseous Effluent Parameters). The alarm setpoint value will be established using the following unit analysis equation:

$$S_{SJAE} = \frac{SF * MRP * DL_j}{F_p * \overline{\chi/Q} * \sum_i (W_i * DCF_{ij})}$$

Where;

S_{SJAE} = the maximum setpoint, based on the most limiting organ, in μCi/cc and where the other terms are as previously defined

e. Gland Seal Condenser Exhaust

1. The gaseous effluents from the Gland Seal Condenser Exhaust discharged to the environment are continuously monitored by radiation monitor (Tag No. SRA-1800 for Unit 1 and SRA-2800 for Unit 2). The radiation monitor will alarm prior to exceeding the limits of step 3.2.4a, Dose Rate. The alarm setpoint for the GSCE monitor will be based on the maximum condenser exhaust flow rate (1260 CFM for Unit 1, 2754 CFM each for the two Unit 2 vents). The alarm setpoint value will be established using the following unit analysis equation:

$$S_{GSCE} = \frac{SF * MRP * DL_j}{F_p * \overline{\chi/Q} * \sum_i (W_i * DCF_{ij})}$$

Where;

S_{GSCE} = the maximum setpoint, based on the most limiting organ, in μCi/cc and where the other terms are as previously defined

3.4 Radioactive Effluents Total Dose

3.4.1 The cumulative dose contributions from liquid and gaseous effluents will be determined by summing the cumulative doses as derived in steps 3.2.3c (Dose), 3.2.4b (Dose - Noble Gases), and 3.2.4c (Dose – Iodine-131, Iodine-133, Tritium, and Radioactive Material in Particulate Form) of this procedure. Dose contribution from direct radiation exposure will be based on the results of the direct radiation monitoring devices located at the REMP monitoring stations. See NUREG-0133, section 3.8.

3.5 Radiological Environmental Monitoring Program (REMP)

3.5.1 Purpose of the REMP

a. The purpose of the REMP is to:

- Establish baseline radiation and radioactivity concentrations in the environs prior to reactor operations,
- Monitor critical environmental exposure pathways,
- Determine the radiological impact, if any, caused by the operation of the Donald C. Cook Nuclear Plant upon the local environment.

b. The first purpose of the REMP was completed prior to the initial operation of either of the two nuclear units at the Donald C. Cook Nuclear Plant Site. The second and third purposes of the REMP are an on-going operation and as such various environmental media and exposure pathways are examined. The various pathways and sample media used are delineated in Attachment 3.19, Radiological Environmental Monitoring Program Sample Stations, Sample Types, Sample Frequencies. Included is a list of the sample media, analysis required, sample stations, and frequency requirements for both collection and analysis. Attachment 3.19, Radiological Environmental Monitoring Program Sample Stations, Sample Types, Sample Frequencies, defines the scope of the REMP for the Donald C. Cook Nuclear Plant.

3.5.2 Conduct of the REMP [Ref. 5.2.1u]

a. Conduct sample collection and analysis for the REMP in accordance with Attachment 3.19, Radiological Environmental Monitoring Program Sample Stations, Sample Types, Sample Frequencies, Attachment 3.20, Maximum Values for Lower Limits of Detections[A,B] - REMP, and Attachment 3.21, Reporting Levels for Radioactivity Concentrations in Environmental Samples. These are applicable at all times. The on-site monitoring locations are shown on Attachment 3.22, On-Site Monitoring Location - REMP, and the off-site monitoring locations are shown on Attachment 3.23, Off-Site Monitoring Locations - REMP.

1. Perform each surveillance requirement within the specified time interval in Attachment 3.19, Radiological Environmental Monitoring Program Sample Stations, Sample Types, Sample Frequencies, with a maximum allowable extension not to exceed 25% of the surveillance interval.

2. If an environmental sample cannot be collected in accordance with step 3.5.2a, submit a description of the reasons for deviation and the actions taken to prevent a reoccurrence as part of the Annual Radiological Environmental Operating Report (AREOR).

   Deviations from the required sampling schedule are permitted if specimens are unobtainable due to hazardous conditions, seasonal unavailability, or malfunction of automatic sampling equipment. If the deviation from the required sampling schedule is due to the malfunction of automatic sampling equipment, make every effort to complete the corrective action prior to the end of the next sampling period.

3. **IF**

   - A radionuclide from plant effluents is detected in any sample medium exceeding the limit established in Attachment 3.21, Reporting Levels for Radioactivity Concentrations in Environmental Samples,

   OR

   - More than one radionuclide from plant effluents is detected in any sample medium **AND** the Total Fractional Level (TFL), when averaged over the calendar quarter, is greater than or equal to 1, based on the following formula:

$$TFL = \frac{C_{(1)}}{L_{(1)}} + \frac{C_{(2)}}{L_{(2)}} + \ldots \geq 1$$

Where;

$C_{(1)}$ = Concentration of 1st detected nuclide

$C_{(2)}$ = Concentration of 2nd detected nuclide

$L_{(1)}$ = Reporting Level of 1st nuclide from Attachment 3.21, Reporting Levels for Radioactivity Concentrations in Environmental Samples.

$L_{(2)}$ = Reporting Level of 2nd nuclide from Attachment 3.21, Reporting Levels for Radioactivity Concentrations in Environmental Samples.

THEN evaluate the release conditions, environmental factors, corrective actions, or other aspects, which may have contributed to the identified levels for inclusion in a Special Report to the Commission within 30 days. Radioactivity not a result of plant effluents does not need a Special Report but shall be described in the AREOR.

4. **IF** a currently sampled milk farm location becomes unavailable, **THEN** conduct a special milk farm survey within 15 days.

   a) **IF** the unavailable location was an indicator farm, **THEN** an alternate sample location may be established within eight miles of the Donald C. Cook Nuclear Plant, if one is available.

   b) **IF** the unavailable location was a background farm, **THEN** an alternate sample location may be established greater than 15 but less than 25 miles of the Donald C. Cook Nuclear Plant in one of the less prevalent wind direction sectors, if one is available.

c) **IF** a replacement farm is unobtainable and the total number of indicator farms is less than three or the background farms is less than one, **THEN** perform monthly vegetation sampling in lieu of milk sampling.

BASES – RADIOLOGICAL ENVIRONMENTAL MONITORING PROGRAM (REMP)

The REMP provides measurements of radiation and radioactive materials in those exposure pathways and for those radionuclides, which lead to the highest potential radiation exposures of individuals resulting from the station operation. Thereby, this monitoring program supplements the radiological effluent monitoring program by verifying the measurable concentration of radioactive materials and levels of radiation are not higher than expected on the basis of the effluent measurements and modeling of the environmental exposure pathways. The initially specified REMP was effective for the first three years of commercial operation. Program changes may be initiated based on operational experience in accordance with the requirements of Technical Specification 5.5.1.c.

The detection capabilities, required by Attachment 3.20, Maximum Values for Lower Limits of Detections[A,B] - REMP, are the state-of-the-art for routine environmental measurements in industrial laboratories.

It should be recognized that the LLD is defined as a priori (before the fact) limit representing the capability of a measurement system and not as a posteriori (after the fact) limit for a particular measurement. Analyses shall be performed in such a manner that the stated LLDs will be achieved under routine analysis conditions. Occasionally, background fluctuations, unavoidably small sample sizes, the presence of interfering nuclides, or other uncontrollable circumstances may render these LLDs unachievable. In such cases, the contributing factors will be identified and described in the Annual Radiological Environmental Operating Report.

3.5.3 Annual Land Use Census [Ref. 5.2.1u]

a. Conduct a land use census and identify the location of the nearest milk animal, the nearest residence and the nearest garden of greater than 500 square feet producing fresh leafy vegetables in each of the ten land sectors within a distance of five miles.

b. In lieu of the garden census, grape and broad leaf vegetation sampling may be performed as close to the site boundary as possible in a land sector, containing sample media, with the highest average deposition factor (D/Q) value.

c. Conduct this land use census annually between the dates of June 1 and October 1 by door-to-door survey, aerial survey, or by consulting local agricultural authorities.

1. With a land use census identifying a location(s), which yields a calculated dose or dose commitment greater than the values currently being calculated in this document, make appropriate changes to incorporate the new location(s) within 30 days, if possible.

BASES -- LAND USE CENSUS

This is provided to ensure changes in the use of unrestricted areas are identified and modifications to the monitoring program are made in accordance with requirements of TS 6.8.4b, if required by the results of the census. This census satisfies the requirements of Section IV.B.3 of Appendix I to 10 CFR Part 50. Restricting the census to gardens of greater than 500 square feet provides assurance that significant exposure pathways via leafy vegetables will be identified and monitored since a garden of this size is the minimum required to produce the quantity (25 kg/yr) of leafy vegetables assumed in Regulatory Guide 1.109 for consumption of a child. To determine this minimum garden size, the following assumptions were used: 1) that 20% of the garden was used for growing broad leaf vegetation (that is, similar to lettuce and cabbage), and 2) a vegetation field of 2 kg/square meter.

3.5.4 Interlaboratory Comparison Program

a. In order to comply with Reg. Guides 4.1 and 4.15, the analytical vendor participates in an Interlaboratory Comparison Program, for radioactive materials. Address program results and identified deficiencies in the AREOR.

1. With analyses not being performed as required above, report the corrective actions taken to prevent a recurrence to the Commission in the AREOR.

BASES -- INTERLABORATORY COMPARISON PROGRAM

The requirement for participation in an Interlaboratory Comparison Program is provided to ensure independent checks on the precision and accuracy of the measurements of radioactive material in environmental sample matrices are performed as part of the quality assurance program for environmental monitoring in order to demonstrate the results are reasonably valid.

3.6 Radioactive Equipment Storage Facility (Mausoleum) Groundwater Monitoring Program

3.6.1 Purpose of the Radioactive Equipment Storage Facility (Mausoleum) Groundwater Radiological Monitoring Program

a. The purpose of the temporary on-site Radioactive Equipment Storage Facility (Mausoleum) Radiological Monitoring Program was to establish baseline radiological data for the groundwater surrounding the facility prior to the storage of the Unit 2 Steam Generator Lower Assemblies. Thereafter, the purpose is to monitor the groundwater through observation wells with locations as shown in Attachment 3.22, On-Site Monitoring Location - REMP, to determine the radiological impact, if any, caused by the use of the Storage Facility.

3.6.2 Conduct of the Radioactive Equipment Storage Facility (Mausoleum) Groundwater Radiological Monitoring Program

a. Collect and analyze groundwater samples in accordance with Attachment 3.19, Radiological Environmental Monitoring Program Sample Stations, Sample Types, Sample Frequencies. Apply the values from Attachment 3.20, Maximum Values for Lower Limits of Detections[A,B] - REMP, (excluding I-131) and Attachment 3.21, Reporting Levels for Radioactivity Concentrations in Environmental Samples, (excluding I-131).

3.7 Meteorological Model

3.7.1 Three towers are used to determine the meteorological conditions at Donald C. Cook Nuclear Plant. One of the towers is located at the Lake Michigan shoreline to determine the meteorological parameters associated with unmodified shoreline air. The data is accumulated by microprocessors at the tower sites and normally transferred to the central computer every 15 minutes.

3.7.2 The central computer uses a meteorological software program to provide atmospheric dispersion and deposition parameters. The meteorological model used is based on guidance provided in Reg. Guide 1.111 for routine releases. All calculations use the Gaussian plume model.

3.8 Reporting Requirements

3.8.1 Annual Radiological Environmental Operating Report (AREOR)

a. Submit routine radiological environmental operating reports covering the operation of the units during the previous calendar year prior to May 15 of each year. [Ref 5.2.1j, TS 5.6.2]

b. Include in the AREOR:

- Summaries, interpretations, and statistical evaluation of the results of the radiological environmental surveillance activities for the reporting period.
- A comparison with pre-operational studies, operational controls (as appropriate), and previous environmental surveillance reports and an assessment of the observed impacts of the plant operation on the environment.
- The results of the land use censuses required by step 3.5.3, Annual Land Use Census.
- If harmful effects or evidence of irreversible damage are detected by the monitoring, provide in the report an analysis of the problem and a planned course of action to alleviate the problem.

- Summarized and tabulated results of all radiological environmental samples taken during the reporting period. In the event that some results are not available for inclusion with the report, submit the report noting and explaining the reasons for the missing results. Submit the missing data as soon as possible in a supplementary report.
- A summary description of the REMP including sampling methods for each sample type, size and physical characteristics of each sample type, sample preparation methods, analytical methods, and measuring equipment used.
- A map of all sample locations keyed to a table giving distances and directions from one reactor.
- The results of participation in the Interlaboratory Comparison Program required by step 3.5.4, Interlaboratory Comparison Program.

3.8.2 Annual Radiological Effluent Release Report (ARERR)

a. Submit routine ARERR covering the operation of the unit during the previous 12 months of operation within 90 days after January 1 of each year. [Ref 5.2.1j, TS 5.6.3]

b. Include in the ARERR a summary of the quantities of radioactive liquid and gaseous effluents and solid waste released from the units as outlined in Reg. Guide 1.21, "Measuring, Evaluating and Reporting in Solid Wastes and Releases of Radioactive Materials in Liquid and Gaseous Effluents from Light-Water Cooled Nuclear Power Plants," with data summarized on a quarterly basis following the format of Appendix B, thereof.

c. Submit in the ARERR 90 days after January 1 of each year and include a quarterly summary of hourly meteorological data collected during the reporting period.

- This summary may be in the form of an hour-by-hour listing of wind speed, wind direction, atmospheric stability, and precipitation (if measured) on magnetic tape, or in the form of joint frequency distributions of wind speed, wind direction and atmospheric stability.
- Include an assessment of the radiation doses due to the radioactive liquid and gaseous effluents released from the unit or station during the previous calendar year.
- Include an assessment of the radiation doses from radioactive liquid and gaseous effluents to members of the public due to their activities inside the site boundary during the reporting period. Include all assumptions used in making these assessments (that is, specific activity, exposure time and location) in these reports.

- Use the meteorological conditions concurrent with the time of release of radioactive materials in gaseous effluents (as determined by sampling frequency and measurement) for determining the gaseous pathway doses.
- Inoperable radiation monitor periods exceeding 30 continuous days; explain causes of inoperability and actions taken to prevent reoccurrence.

d. Submit the ARERR [Ref. 5.2.1w] 90 days after January 1 of each year and include an assessment of radiation doses to the likely most exposed member of the public from reactor releases and other nearby uranium fuel cycle sources (including doses from primary effluent pathways and direct radiation) for the previous 12 consecutive months to show conformance with 40 CFR 190, Environmental Radiation Protection Standards for Nuclear Power Operation. Acceptable methods for calculating the dose contribution from liquid and gaseous effluents are given in Reg. Guide 1.109, Rev.1.

e. Include in the ARERR the following information for each type of solid waste shipped off-site during the report period:

- Volume (cubic meters),
- Total curie quantity (specify whether determined by measurement or estimate),
- Principle radionuclides (specify whether determined by measurement or estimate),
- Type of waste (example: spent resin, compacted dry waste, evaporator bottoms),
- Type of container (example: LSA, Type A, Type B, Large Quantity),
  -AND-
- Solidification agent (example: cement).

f. Include in the ARERR unplanned releases of radioactive materials in gaseous and liquid effluent from the site to unrestricted areas on a quarterly basis.

g. Include in the ARERR any change to this procedure made during the reporting period.

h. Due to the site having shared gaseous and liquid waste systems dose calculations will be performed on a per site bases using the per unit values. This is ALARA and will ensure compliance with 40 CFR 141, National Primary Drinking Water Regulations. Unit specific values are site values divided by two.

3.9 10 CFR 50.75 (g) Implementation

3.9.1 Records of spills or other unusual occurrences involving the spread of contamination in and around the site. These records may be limited to instances when significant contamination remains after decontamination or when there is a reasonable likelihood that contaminants may have spread to inaccessible areas, as in the case of possible seepages.

3.9.2 These records shall include any known information or identification of involved nuclides, quantities, and concentrations.

3.9.3 This information is necessary to ensure all areas outside the radiological-restricted area are documented for surveying and remediation during decommissioning. There is a retention schedule file number where this information is filed in Nuclear Documents Management to ensure all required areas are listed to prevent their omission.

3.10 Reporting/Management Review

3.10.1 Incorporate any changes to this procedure in the ARERR.

3.10.2 Update this procedure when the Radiation Monitoring System, its instruments, or the specifications of instruments are changed.

3.10.3 Review or revise this procedure as appropriate based on the results of the land use census and REMP.

3.10.4 Evaluate any changes to this procedure for potential impact on other related Department Procedures.

3.10.5 Review this procedure during the first quarter of each year and update it if necessary. Review Attachment 3.16, 10 Year Average of 1995-2004 Data, and document using Attachment 3.17, Annual Evaluation of $\overline{\chi/Q}$ and $\overline{D/Q}$ Values For All Sectors. The $\overline{\chi/Q}$ and $\overline{D/Q}$ values will be evaluated to ensure all data is within ± 3 standard deviations of the 10 year annual average data and documented by completing Attachment 3.17, Annual Evaluation of $\overline{\chi/Q}$ and $\overline{D/Q}$ Values For All Sectors, and filed in accordance with the retention schedule.

4 FINAL CONDITIONS

4.1 None.

5 REFERENCES

5.1 Use References:

5.1.1 "Implementation of Programmatic Controls for Radiological Effluent Technical Specifications in the Administrative Controls Section of the Technical Specifications and the Relocation of Procedural Details of RETS to the Off-Site Dose Calculation Manual or to the Process Control Program (Generic Letter 89-01)", United States Nuclear Regulatory Commission, January 31, 1989

5.1.2 12-THP-6010-RPP-601, Preparation of the Annual Radioactive Effluent Release Report

5.1.3 12-THP-6010-RPP-639, Annual Radiological Environmental Operating Report (AREOR) Preparation And Submittal

5.2 Writing References:

5.2.1 Source References:

a. 10 CFR 20, Standards for Protection Against Radiation
b. 10 CFR 50, Domestic Licensing of Production and Utilization Facilities
c. PMI-6010, Radiation Protection Plan
d. NUREG-0472
e. NUREG-0133
f. Regulatory Guide 1.109, non-listed parameters are taken from these data tables
g. Regulatory Guide 1.111
h. Regulatory Guide 1.113
i. Final Safety Analysis Report (FSAR)
j. Technical Specifications 5.4.1.e, 5.5.1.c, 5.5.3, 5.6.2, and 5.6.3
k. Final Environmental Statement Donald. C. Cook Nuclear Plant, August 1973
l. NUREG-0017
m. ODCM Setpoints for Liquid [and Gaseous] Effluent Monitors (Bases), ENGR 107-04 8112.1 Environs Rad Monitor System
n. HPPOS-223, Consideration of Measurement Uncertainty When Measuring Radiation Levels Approaching Regulatory Limits
o. Watts - Bar Jones (WBJ) Document, R-86-C-001, The Primary Calibration of Eberline Instrument Corporation SPING - 3/4 Low, Mid, and High Range Noble Gas Detectors
p. WBJ Document, R-86-C-003, The Primary Calibration of Eberline Instrument Corporation DAM-4 and Water Monitor
q. 40 CFR 190, Environmental Radiation Protection Standards for Nuclear Power Operations
r. NRC Commitment 6309 (N94083 dated 11/10/94)
s. NRC Commitment 1151
t. NRC Commitment 1217

u. NRC Commitment 3240

v. NRC Commitment 3850

w. NRC Commitment 4859

x. NRC Commitment 6442

y. NRC Commitment 3768

z. DIT-B-00277-00, HVAC Systems Design Flows

aa. Regulatory Guide 1.21

bb. Regulatory Guide 4.1

cc. 1-2-V3-02-Calc #4, Unit Vent Sample Flow rate for isokinetic particulates and Iodine sampling

dd. HPS N13.30-1996, Appendix A Rationale for Methods of Determining Minimum Detectable Amount (MDA) and Minimum Testing Level (MDL

ee. DIT-B-01971-00, Dose Factors for Radioactive Particulate Gaseous Effluents Associated with the Child by the Inhalation Pathway

ff. DIT-B-01987-00, Ground Plane & Food Dose Factors P_i for Radioiodines and Radioactive Particulate Gaseous Effluents

gg. NRC Commitment 1010

5.2.2 General References

a. Cook Nuclear Plant Start-Up Flash Tank Flow Rate letter from D. L. Boston dated January 21, 1997

b. Letter from B.P. Lauzau, Venting of Middle CVCS Hold-Up Tank Directly to Unit Vent, May 1, 1992

c. AEP Design Information Transmittal on Aux Building Ventilation Systems

d. PMP-4030.EIS.001, Event-Initiated Surveillance Testing

e. Environmental Position Paper, Fe Impact on Release Rates, approved 3/14/00

f. Environmental Position Paper, Methodology Change from Sampling Secondary System Gaseous Effluents for Power Changes Exceeding 15% within 1 hr to Responding to Gaseous Alert Alarms, approved 4/4/00

g. CR 02150078, RRS-1000 efficiency curve usage

h. Environmental Position Paper, Unit Vent Compensatory Sampling, approved 4/14/05

R_i Dose Factors

PATHWAY

Nuclide	Ground	Vegetable	Meat	Cow Milk	Goat Milk	Inhalation
H-3	0.0E+00	4.0E+03	3.3E+02	2.4E+03	4.9E+03	1.3E+03
C-14	0.0E+00	3.5E+06	5.3E+05	3.2E+06	3.2E+06	3.6E+04
Cr-51	5.4E+06	1.1E+07	1.5E+06	6.9E+06	8.3E+05	2.1E+04
Mn-54	1.6E+09	9.4E+08	2.1E+07	2.9E+07	3.5E+06	2.0E+06
Fe-59	3.2E+08	9.6E+08	1.7E+09	3.1E+08	4.0E+07	1.5E+06
Co-58	4.4E+08	6.0E+08	2.9E+08	8.4E+07	1.0E+07	1.3E+06
Co-60	2.5E+10	3.2E+09	1.0E+09	2.7E+08	3.2E+07	8.6E+06
Zn-65	8.5E+08	2.7E+09	9.5E+08	1.6E+10	1.9E+09	1.2E+06
Sr-89	2.5E+04	3.5E+10	3.8E+08	9.9E+09	2.1E+10	2.4E+06
Sr-90	0.0E+00	1.4E+12	9.6E+09	9.4E+10	2.0E+11	1.1E+08
Zr-95	2.9E+08	1.2E+09	1.5E+09	9.3E+05	1.1E+05	2.7E+06
Sb-124	6.9E+08	3.0E+09	4.4E+08	7.2E+08	8.6E+07	3.8E+06
I-131	1.0E+07	2.4E+10	2.5E+09	4.8E+11	5.8E+11	1.6E+07
I-133	1.5E+06	4.0E+08	6.0E+01	4.4E+09	5.3E+09	3.8E+06
Cs-134	7.9E+09	2.5E+10	1.1E+09	5.0E+10	1.5E+11	1.1E+06
Cs-136	1.7E+08	2.2E+08	4.2E+07	5.1E+09	1.5E+10	1.9E+05
Cs-137	1.2E+10	2.5E+10	1.0E+09	4.5E+10	1.4E+11	9.0E+05
Ba-140	2.3E+07	2.7E+08	5.2E+07	2.1E+08	2.6E+07	2.0E+06
Ce-141	1.5E+07	5.3E+08	3.0E+07	8.3E+07	1.0E+07	6.1E+05
Ce-144	7.9E+07	1.3E+10	3.6E+08	7.3E+08	8.7E+07	1.3E+07

Units for all except inhalation pathway are m^2 mr sec / yr μCi, inhalation pathway units are mr m^3 / yr μCi.

U_{ap} Values to be Used For the Maximum Exposed Individual

Pathway	Infant	Child	Teen	Adult
Fruits, vegetables and grain (kg/yr)	--	520	630	520
Leafy vegetables (kg/yr)	--	26	42	64
Milk (L/yr)	330	330	400	310
Meat and poultry (kg/yr)	--	41	65	110
Fish (kg/yr)	--	6.9	16	21
Drinking water (L/yr)	330	510	510	730
Shoreline recreation (hr/yr)	--	14	67	12
Inhalation (m^3/yr)	1400	3700	8000	8000

Table E-5 of Reg. Guide 1.109.

B_{ip} Factors for Aquatic Foods
pCi l / kg pCi

Element	Fish	Invertebrate
H	9.0E-1	9.0E-1
C	4.6E3	9.1E3
Na	1.0E2	2.0E2
P	1.0E5	2.0E4
Cr	2.0E2	2.0E3
Mn	4.0E2	9.0E4
Fe	1.0E2	3.2E3
Co	5.0E1	2.0E2
Ni	1.0E2	1.0E2
Cu	5.0E1	4.0E2
Zn	2.0E3	1.0E4
Br	4.2E2	3.3E2
Rb	2.0E3	1.0E3
Sr	3.0E1	1.0E2
Y	2.5E1	1.0E3
Zr	3.3E0	6.7E0
Nb	3.0E4	1.0E2
Mo	1.0E1	1.0E1
Tc	1.5E1	5.0E0
Ru	1.0E1	3.0E2
Rh	1.0E1	3.0E2
Te	4.0E2	6.1E3
I	1.5E1	5.0E0
Cs	2.0E3	1.0E3
Ba	4.0E0	2.0E2
La	2.5E1	1.0E3
Ce	1.0E0	1.0E3
Pr	2.5E1	1.0E3
Nd	2.5E1	1.0E3
W	1.2E3	1.0E1
Np	1.0E1	4.0E2

Table A-1 of Reg. Guide 1.109.

D_{aipj} External Dose Factors for Standing on Contaminated Ground
mrem m^2 / hr ρCi

Radionuclide	Total Body	Skin
H-3	0	0
C-14	0	0
Na-24	2.5E-8	2.9E-8
P-32	0	0
Cr-51	2.2E-10	2.6E-10
Mn-54	5.8E-9	6.8E-9
Mn-56	1.1E-8	1.3E-8
Fe-55	0	0
Fe-59	8.0E-9	9.4E-9
Co-58	7.0E-9	8.2E-9
Co-60	1.7E-8	2.0E-8
Ni-63	0	0
Ni-65	3.7E-9	4.3E-9
Cu-64	1.5E-9	1.7E-9
Zn-65	4.0E-9	4.6E-9
Zn-69	0	0
Br-83	6.4E-11	9.3E-11
Br-84	1.2E-8	1.4E-8
Br-85	0	0
Rb-86	6.3E-10	7.2E-10
Rb-88	3.5E-9	4.0E-9
Rb-89	1.5E-8	1.8E-8
Sr-89	5.6E-13	6.5E-13
Sr-91	7.1E-9	8.3E-9
Sr-92	9.0E-9	1.0E-8
Y-90	2.2E-12	2.6E-12
Y-91m	3.8E-9	4.4E-9
Y-91	2.4E-11	2.7E-11
Y-92	1.6E-9	1.9E-9
Y-93	5.7E-10	7.8E-10
Zr-95	5.0E-9	5.8E-9
Zr-97	5.5E-9	6.4E-9
Nb-95	5.1E-9	6.0E-9
Mo-99	1.9E-9	2.2E-9
Tc-99m	9.6E-10	1.1E-9
Tc-101	2.7E-9	3.0E-9
Ru-103	3.6E-9	4.2E-9
Ru-105	4.5E-9	5.1E-9
Ru-106	1.5E-9	1.8E-9
Ag-110m	1.8E-8	2.1E-8
Te-125m	3.5E-11	4.8E-11

Radionuclide	Total Body	Skin
Te-127m	1.1E-12	1.3E-12
Te-127	1.0E-11	1.1E-11
Te-129m	7.7E-10	9.0E-10
Te-129	7.1E-10	8.4E-10
Te-131m	8.4E-9	9.9E-9
Te-131	2.2E-9	2.6E-6
Te-132	1.7E-9	2.0E-9
I-130	1.4E-8	1.7E-8
I-131	2.8E-9	3.4E-9
I-132	1.7E-8	2.0E-8
I-133	3.7E-9	4.5E-9
I-134	1.6E-8	1.9E-8
I-135	1.2E-8	1.4E-8
Cs-134	1.2E-8	1.4E-8
Cs-136	1.5E-8	1.7E-8
Cs-137	4.2E-9	4.9E-9
Cs-138	2.1E-8	2.4E-8
Ba-139	2.4E-9	2.7E-9
Ba-140	2.1E-9	2.4E-9
Ba-141	4.3E-9	4.9E-9
Ba-142	7.9E-9	9.0E-9
La-140	1.5E-8	1.7E-8
La-142	1.5E-8	1.8E-8
Ce-141	5.5E-10	6.2E-10
Ce-143	2.2E-9	2.5E-9
Ce-144	3.2E-10	3.7E-10
Pr-143	0	0
Pr-144	2.0E-10	2.3E-10
Nd-147	1.0E-9	1.2E-9
W-187	3.1E-9	3.6E-9
Np-239	9.5E-10	1.1E-9

Table E-6 of Reg. Guide 1.109.

INSTRUMENT	Minimum Channels Operable[a]	Applicability	Action
1. Gross Radioactivity Monitors Providing Automatic Release Termination			
a. Liquid Radwaste Effluent Line (RRS-1001)	(1)#	At times of release	1
b. Steam Generator Blowdown Line (R-19, DRS 3/4100 +)	(1)#	At times of release**	2
c. Steam Generator Blowdown Treatment Effluent (R-24, DRS 3/4200 +)	(1)#	At times of release	2
2. Gross Radioactivity Monitors Not Providing Automatic Release Termination			
a. Service Water System Effluent Line (R-20, R-28)	(1) per train	At all times	3
3. Continuous Composite Sampler Flow Monitor			
a. Turbine Building Sump Effluent Line	(1)	At all times	3
4. Flow Rate Measurement Devices			
a. Liquid Radwaste Line (RFI-285)	(1)	At times of release	4
b. Discharge Pipes*	(1)	At all times	NA
c. Steam Generator Blowdown Treatment Effluent (DFI-352)	(1)	At times of release	4
d. Individual Steam Generator sample flow to Blowdown radiation monitors alarm (DFA-310, 320, 330 and 340)	(1) per generator	At times of release	5

* Pump curves and valve settings may be utilized to estimate flow; in such cases, Action Statement 4 is not applicable. This is primarily in reference to start up flash tank flow.

\# OPERABILITY of RRS-1001 includes OPERABILITY of sample flow switch RFS-1010, which is an attendant instrument as defined in Technical Specification section 1.1, under the term Operable - Operability. This item is also applicable for all Eberline liquid monitors (and their respective flow switches) listed here.

** Since these monitors can be used for either batch or continuous release the appropriate action statement of 1 or 2 should apply (that is, Action 1 if a steam generator drain is being performed in lieu of Action 2). It is possible, due to the steam generator sampling system lineup, that BOTH action statements are actually entered. This would be the case when sampling for steam generator draining requires duplicate samples while the sample system is lined up to discharge to the operating units blowdown system. In this case the steam generator drain samples can fulfill the sample requirement for Action 2 also. Action 2 would be exited when sampling was terminated.

\+ Some Westinghouse (R) radiation monitors are being replaced by Eberline (DRS) monitors. Either monitor can fulfill the operability requirement. Ensure surveillances are current for operability of the instrumentation prior to using it to satisfy applicability requirement.

a **IF** an RMS monitor is inoperable solely as the result of the loss of its control room alarm annunciation, **THEN** one of the following actions is acceptable to satisfy the ODCM action statement compensatory surveillance requirement:

1. Collect grab samples and conduct laboratory analyses per the specific monitor's action statement,

   -OR-

2. Collect local monitor readings at a frequency equal to or greater than (more frequently than) the action frequency.

IF the RMS monitor is inoperable for reasons other than the loss of control room annunciation, **THEN** the only acceptable action is taking grab samples and conducting laboratory analyses as the reading is equivalent to a grab sample when the monitor is functional.

TABLE NOTATION

Action 1 With the number of channels OPERABLE less than required by the Minimum Channels OPERABLE requirement, effluent releases may continue, provided that prior to initiating a release:

1. At least two independent samples are analyzed in accordance with Step 3.2.3a and;
2. At least two technically qualified members of the Facility Staff independently verify the discharge valving. Otherwise, suspend release of radioactive effluents via this pathway.

Action 2 With the number of channels OPERABLE less than required by the Minimum Channels OPERABLE requirement, effluent releases via this pathway may continue for up to 30 days provided grab samples are analyzed for gross radioactivity (beta or gamma) at a limit of detection of at least 10-7 μCi/gram:

1. At least once per shift when the specific activity of the secondary coolant is > 0.01 μCi/gram DOSE EQUIVALENT I-131.
2. At least once per 24 hours when the specific activity of the secondary coolant is ≤ 0.01 μCi/gram DOSE EQUIVALENT I-131.

After 30 days, **IF** the channels are not OPERABLE, **THEN** continue releases with required grab samples provide a description of why the inoperability was not corrected in the next Annual Radiological Effluent release Report.

Action 3 With the number of channels OPERABLE less than required by the Minimum Channels OPERABLE requirement, effluent releases via this pathway may continue for up to 30 days provided that at least once per shift, grab samples are collected and analyzed for gross radioactivity (beta or gamma) at a lower limit of detection of at least 10-7 μCi/ml. Since the Westinghouse ESW monitors (R-20 and R-28) are only used for post LOCA leak detection and have no auto trip function associated with them, grab samples are only needed if the Containment Spray Heat Exchanger is in service. After 30 days, **IF** the channels are not OPERABLE, **THEN** continue releases with grab samples once per shift and provide a description of why the inoperability was not corrected in the next Annual Radiological Effluent release Report.

Action 4 With the number of channels OPERABLE less than required by the Minimum Channels OPERABLE requirement, effluent releases via this pathway may continue for up to 30 days provided the flow rate is estimated at least once per 4 hours during actual releases. After 30 days, **IF** the channels are not OPERABLE, **THEN** continue releases with grab samples once per shift and provide a description of why the inoperability was not corrected in the next Annual Radiological Effluent release Report.

Action 5 With the number of channels OPERABLE less than required by the Minimum Channels OPERABLE requirement, effluent releases via this pathway may continue for up to 30 days provided the flow rate is verified to be within the required band at least once per 4 hours during actual releases. After 30 days, **IF** the channels are not OPERABLE, **THEN** continue releases with grab samples once per shift and provide a description of why the inoperability was not corrected in the next Annual Radiological Effluent release Report. **IF** the flow cannot be obtained within the desired band, **THEN** declare the radiation monitor inoperable and enter the appropriate actions statement, Action 2.

Compensatory actions are governed by PMP-4030-EIS-001, Event-Initiated Surveillance Testing

Instrument	CHANNEL CHECK	SOURCE CHECK	CHANNEL CALIBRATION	CHANNEL OPERATIONAL TEST
1. Gross Radioactivity Monitors Providing Automatic Release Termination				
a. Liquid Radwaste Effluent Line (RRS-1001)	D*	P	B(3)	Q(5)
b. Steam Generator Blowdown Effluent Line	D*	M	B(3)	Q(1)
c. Steam Generator Blowdown Treatment Effluent Line	D*	M	B(3)	Q(1)
2. Gross Radioactivity Monitors Not Providing Automatic Release Termination				
a. Service Water System Effluent Line	D	M	B(3)	Q(2)
3. Continuous Composite Samplers				
a. Turbine Building Sump Effluent Line	D*	N/A	N/A	N/A
4. Flow Rate Measurement Devices				
a. Liquid Radwaste Effluent	D(4)*	N/A	B	Q
b. Steam Generator Blowdown Treatment Line	D(4)*	N/A	N/A	N/A

* During releases via this pathway

TABLE NOTATION

1. Demonstrate with the CHANNEL OPERATIONAL TEST that automatic isolation of this pathway and control room alarm annunciation occurs if any of the following conditions exists:
   1. Instrument indicates measured levels above the alarm/trip setpoint.
   2. Circuit failure.*
   3. Instrument indicates a downscale failure.*
   4. Instrument control not set in operating mode.*
   5. Loss of sample flow. *

2. Demonstrate with the CHANNEL OPERATIONAL TEST that control room alarm annunciation occurs if any of the following conditions exists:
   1. Instrument indicates measured levels above the alarm setpoint.
   2. Circuit failure.
   3. Instrument indicates a downscale failure.
   4. Instrument controls not set in operating mode.

3. Perform the initial CHANNEL CALIBRATION using one or more sources with traceability back to the National Institute of Standards and Technology (NIST). These sources permit calibrating the system over its intended range of energy and measurement range. For subsequent CHANNEL CALIBRATION, sources that have been related to the initial calibration may be used.

4. Verify indication of flow during periods of release with the CHANNEL CHECK. Perform the CHANNEL CHECK at least once per 24 hours on days on which continuous, periodic or batch releases are made.

5. Demonstrate with the CHANNEL OPERATIONAL TEST that automatic isolation of this pathway and control room alarm annunciation occurs if any of the following conditions exists:
   1. Instrument indicates measured levels above the alarm/trip setpoint.
   2. Circuit failure.**
   3. Instrument indicates a downscale failure.**
   4. Instrument control not set in operating mode.*
   5. Loss of sample flow.

* Instrument indicates, but does not provide for automatic isolation

** Instrument indicates, but does not necessarily cause automatic isolation. No credit is taken for the automatic isolation on such occurrences.

Operations currently performs the routine channel checks and source checks. Maintenance and Radiation Protection perform channel calibrations and channel operational tests. Chemistry performs the channel check on the continuous composite sampler. These responsibilities are subject to change without revision to this document.

Instrument (Instrument #)	Operable[1]	Minimum Channels Action	Action
1. Condenser Evacuation System			
a. Noble Gas Activity Monitor (SRA-1905/2905)	(1)	****	6
b. Flow Rate Monitor (SFR-401, 1/2-MR-054 and/or SRA- 1910/2910) OR (SFR-402 and 1/2-MR-054)	(1)	****	5
2. Unit Vent. Auxiliary Building Ventilation System			
a. Noble Gas Activity Monitor (VRS-1505/2505)	(1)	*	6
b. Iodine Sampler Cartridge for VRA-1503/2503	(1)	*	8
c. Particulate Sampler Filter for VRA-1501/2501	(1)	*	8
d. Effluent System Flow Rate Measuring Device (VFR-315, MR-054 and/or VFR-1510/2510)	(1)	*	5
e. Sampler Flow Rate Measuring Device (VFS-1521/2521)	(1)	*	5
3. Containment Purge and Containment Pressure Relief (Vent) **			
a. Containment Noble Gas Activity Monitor ERS-13/1405 (ERS-23/2405)	(1)	****[2, 3]	7
b. Containment Particulate Sampler Filter ERS-13/1401 (ERS-23/2401)	(1)	****	10
4. Waste Gas Holdup System and CVCS HUT (Batch releases)**			
a. Noble Gas Activity Alarm and Termination of Waste Gas Releases (VRS-1505/2505)	(1)	****[4]	9
5. Gland Seal Exhaust			
a. Noble Gas Activity Monitor (SRA-1805/2805)	(1)	****	6
b. Flow Rate Monitor (SFR-201, MR-054 or SFR-1810/2810)	(1)	****	5

* At all times

** Containment Purge and other identified gaseous batch releases can be released utilizing the same double sampling compensatory action requirements of action 9 identified here even if there is no termination function associated with it like that associated with the two specific tank types listed here.

**** During releases via this pathway

TABLE NOTATIONS

1. **IF** an RMS monitor is inoperable solely as the result of the loss of it's control room alarm annunciation, **THEN** one of the following actions is acceptable to satisfy the ODCM action statement compensatory surveillance requirement:

   1. Take grab samples and conduct laboratory analyses per the specific monitor's action statement,
      -OR-
   2. Take local monitor readings at a frequency equal to or greater than (more frequently than) the action frequency.

   IF the RMS monitor is inoperable for reasons other than the loss of control room annunciation, **THEN** the only acceptable action is taking grab samples and conducting laboratory analyses as the reading is equivalent to a grab sample when the monitor is functional.

2. Consider releases as occurring "via this pathway" under the following conditions:

   - The Containment Purge System is in operation and Containment Operability is applicable,
     -OR-
   - The Containment Purge System is in operation and is being used as the vent path for the venting of contaminated systems within the containment building prior to completing both degas and depressurization of the RCS.

   IF neither of the above are applicable, **THEN** the containment purge system is acting as a ventilation system (an extension of the Auxiliary Building) and is covered by Item 2 of this Attachment.

   -OR-
   - A Containment Pressure Relief (CPR) is being performed.

   Once Purge (clean-up) has been completed and 'Ventilation' mode of Purge has commenced – resultant return to 'Clean-up' mode can be made with no additional sampling requirements or paperwork – so long as either ERS-1305/2305 **OR** ERS-1405/2405 are operable. Containment particulate channels are not needed since the RCS has been degassed and depressurized so leak detection is not an issue.

3. For purge (including pressure relief) purposes only. Reference TS 3.6.1, Containment Purge Supply and Exhaust System Isolation Instrumentation and 3.4.15, RCS Leakage Detection Instrumentation for additional information.

4. For waste gas releases only, see Item 2 (Unit Vent, Auxiliary Building Ventilation System) for additional requirements.

ACTIONS

5. With the number of channels OPERABLE less than required by the Minimum Channels OPERABLE requirement, effluent releases via this pathway may continue for up to 30 days provided the flow rate is estimated at least once per 4 hours. After 30 days, **IF** the channels are not OPERABLE, **THEN** continue releases with estimation of the flow rate once per 4 hours and provide a description of why the inoperability was not corrected in the next Annual Radiological Effluent Release Report.

6. With the number of channels OPERABLE less required by the Minimum Channels OPERABLE requirement, effluent releases via this pathway may continue for up to 30 days provided grab samples are taken at least once per shift and these samples are analyzed for gross activity within 24 hours. After 30 days, **IF** the channels are not OPERABLE, **THEN** continue releases with grab samples once per shift and provide a description of why the inoperability was not corrected in the next Annual Radiological Effluent release Report.

7. With the number of channels OPERABLE less than required by the Minimum Channels OPERABLE requirements, immediately suspend PURGING or VENTING (CPR) of radioactive effluents via this pathway.

8. With the number of channels OPERABLE less than required by the Minimum Channels OPERABLE requirement, effluent releases via the affected pathway may continue for up to 30 days provided samples required for weekly analysis are continuously collected with auxiliary sampling equipment as required in Attachment 3.7, Radioactive Gaseous Waste Sampling and Analysis Program. After 30 days, **IF** the channels are not OPERABLE, **THEN** continue releases with sample collection by auxiliary sampling equipment and provide a description of why the inoperability was not corrected in the next Annual Radiological Effluent Release Report.

   Sampling evolutions are not an interruption of a continuous release or sampling period.

9. With the number of channels OPERABLE less than required by the Minimum Channels OPERABLE requirement, the contents of the tank(s) may be released to the environment for up to 14 days provided that prior to initiating the release:

   a. At least two independent samples of the tank's contents are analyzed and,
   b. At least two technically qualified members of the Facility Staff independently verify the release rate calculations and discharge valve lineups; otherwise, suspend release of radioactive effluents via this pathway.

After 14 days, **IF** the channels are not OPERABLE, **THEN** continue releases with sample collection by auxiliary sampling equipment and provide a description of why the inoperability was not corrected in the next Annual Radiological Effluent Release Report

10. See Technical Specification 3.4.15, RCS Leakage Detection System Instrumentation.

Compensatory actions are governed by PMP-4030-EIS-001, Event-Initiated Surveillance Testing.

Instrument	CHANNEL CHECK	SOURCE CHECK	CHANNEL CALIBRATION	CHANNEL OPERATIONAL TEST
1. Condenser Evacuation System	Alarm Only			
a. Noble Gas Activity Monitor (SRA-1905/2905)	D**	M	B(2)	Q(1)
b. System Effluent Flow Rate (SFR-401, SFR-402, MR-054, SRA-1910/2910)	D**	NA	B	Q
2. Auxiliary Building Unit Ventilation System	Alarm Only			
a. Noble Gas Activity Monitor (VRS-1505/2505)	D*	M	B(2)	Q(1)
b. Iodine Sampler (For VRA-1503/2503)	W*	NA	NA	NA
c. Particulate Sampler (For VRA-1501/2501)	W*	NA	NA	NA
d. System Effluent Flow Rate Measurement Device (VFR-315, MR-054, VRS-1510/2510)	D*	NA	B	Q
e. Sampler Flow Rate Measuring Device (VFS-1521/2521)	D*	N/A	B	Q
3. Containment Purge System and Containment Pressure Relief	Alarm and Trip			
a. Containment Noble Gas Activity Monitor (ERS-13/1405 and ERS-23/2405)	S	P	B(2)	Q
b. Containment Particulate Sampler (ERS-13/1401 and ERS-23/2401)	S	NA	B	Q
4. Waste Gas Holdup System Including CVCS HUT	Alarm and Trip			
a. Noble Gas Activity Monitor Providing Alarm and Termination (VRS-1505/2505)	P	P	B(2)	Q(3)
5. Gland Seal Exhaust	Alarm Only			
a. Noble Gas Activity (SRA-1805/2805)	D**	M	B(2)	Q(1)
b. System Effluent Flow Rate (SFR-201, MR-054, SRA-1810/2810)	D**	NA	B	Q

* At all times

** During releases via this pathway

TABLE NOTATIONS

1. Demonstrate with the CHANNEL OPERATIONAL TEST that control room alarm annunciation occurs if any of the following conditions exists:
   1. Instrument indicates measured levels above the alarm setpoint.
   2. Circuit failure.
   3. Instrument indicates a downscale failure.
   4. Instrument controls not set in operate mode.
2. Perform the initial CHANNEL CALIBRATION using one or more sources with traceability back to the NIST. These sources permit calibrating the system over its intended range of energy and measurement range. For subsequent CHANNEL CALIBRATION, sources that have been related to the initial calibration may be used.
3. Demonstrate with the CHANNEL OPERATIONAL TEST that automatic isolation of this pathway and control room alarm annunciation occurs if any of the following conditions exists:
   1. Instrument indicates measured levels above the alarm/trip setpoint.
   2. Circuit failure.*
   3. Instrument indicates a downscale failure.*
   4. Instrument controls not set in operate mode.*

* Instrument indicates, but does not provide automatic isolation.

Operations currently performs the routine channel checks, and source checks. Maintenance and Radiation Protection perform channel calibrations and channel operational tests. These responsibilities are subject to change without revision to this document.

[Ref. 5.2.1s]

LIQUID RELEASE TYPE	SAMPLING FREQUENCY	MINIMUM ANALYSIS FREQUENCY	TYPE OF ACTIVITY ANALYSIS	LOWER LIMIT OF DETECTION (LLD) (µCi/ml) [a]
A. Batch Waste Release Tanks [c]	P Each Batch	P Each Batch	Principal Gamma Emitters [e]	$5x10^{-7}$
			I-131	$1x10^{-6}$
	P Each Batch	P Each Batch	Dissolved and Entrained Gases (Gamma Emitters)	$1x10^{-5}$
	P Each Batch	M Composite [b]	H-3	$1x10^{-5}$
			Gross Alpha	$1x10^{-7}$
	P Each Batch	Q Composite [b]	Sr-89, Sr-90	$5x10^{-8}$
			Fe-55	$1x10^{-6}$
B. Plant Continuous Releases* [d]	Daily	W Composite [b]	Principal Gamma Emitters [e]	$5x10^{-7}$
			I-131	$1x10^{-6}$
	M Grab Sample	M	Dissolved and Entrained Gases (Gamma Emitters)	$1x10^{-5}$
	Daily	M Composite [b]	H-3	$1x10^{-5}$
			Gross Alpha	$1x10^{-7}$
	Daily	Q Composite [b]	Sr-89, Sr-90	$5x10^{-8}$
			Fe-55	$1x10^{-6}$

*During releases via this pathway

This table provides the minimum requirements for the liquid sampling program. If additional sampling is performed then those sample results can be used to quantify releases in lieu of composite data for a more accurate quantification. Examples of these samples are the 72 hour secondary coolant activity and Monitor Tank tritium samples.

TABLE NOTATION

a. The lower limit of detection (LLD) is defined in Table Notation A. of Attachment 3.20, Maximum Values for Lower Limits of Detections[A,B] - REMP

b. A composite sample is one in which the quantity of liquid sampled is proportional to the quantity of liquid waste discharged and in which the method of sampling employed results in a specimen which is representative of the liquids released.

c. A batch release is the discharge of liquid wastes of a discrete volume. Prior to sampling for analysis, isolate, recirculate or sparge each batch to ensure thorough mixing. Examples of these are Monitor Tank and Steam Generator Drains. Before a batch is released the tank is sampled and analyzed to determine that it can be released without exceeding federal standards.

d. A continuous release is the discharge of liquid of a non-discrete volume; e.g. from a volume of system that has an input flow during the continuous release. This type of release includes the Turbine Room Sump, Steam Generator Blowdown and the Steam Generator Sampling System.

e. The principal gamma emitters for which the LLD specification applies exclusively are the following radionuclides: Mn-54, Fe-59, Co-58, Co-60, Zn-65, Mo-99, Cs-134, Cs-137, Ce-141 and Ce-144. This list does not mean that only these nuclides are to be detected and reported. Identify and report other peaks, which are measurable and identifiable, together with the above nuclides.

Gaseous Release Type	Frequency	Minimum Analysis Frequency	Type of Activity Analysis	Lower Limit of Detection (µCi/cc) [a]
a. Waste Gas Storage Tanks and CVCS HUTs	**P** Each Tank Grab Sample	**P** Each Tank	Principal Gamma Emitters [d]	1×10^{-4}
			H-3	1×10^{-6}
b. Containment Purge	**P** Each Purge Grab Sample	**P** Each Purge	Principal Gamma Emitters [d]	1×10^{-4}
CPR (vent)**	Twice per Month	Twice per Month		
			H-3	1×10^{-6}
c. Condenser Evacuation System Gland Seal Exhaust* [i]	**W or M** Grab Sample	**M** Particulate Sample	Principal Gamma Emitters [d]	1×10^{-11}
		M	H-3	1×10^{-6}
		W [g] Noble Gas	Principle Gamma Emitters [d]	1×10^{-4}
		M Iodine Adsorbing Media	I-131	1×10^{-12}
	Continuous	**W** [g] Noble Gas Monitor	Noble Gases	1×10^{-6}
d. Auxiliary Building Unit Vent*	Continuous [c]	**W** [b] Iodine Adsorbing Media	I-131	1×10^{-12}
	Continuous [c]	**W** [b] Particulate Sample	Principal Gamma Emitters [d]	1×10^{-11}
	Continuous [c]	**M** Composite Particulate Sample	Gross Alpha	1×10^{-11}
	W Grab Sample	**W** [h] H-3 Sample	H-3	1×10^{-6}
		W [gj] Noble Gas	Principle Gamma Emitters [d]	1×10^{-4}
	Continuous [c]	**Q** Composite Particulate Sample	Sr-89, Sr-90	1×10^{-11}
	Continuous [c]	Noble Gas Monitor	Noble Gases	1×10^{-6}
e. Incinerated Oil [e]	**P** Each Batch [f]	**P** Each Batch [f]	Principal Gamma Emitters [d]	5×10^{-7}

*During releases via this pathway

**Only a twice per month sampling program for containment noble gases and H_3 is required

This table provides the minimum requirements for the gaseous sampling program. If additional sampling is performed then those sample results can be used to quantify releases in lieu of composite data for a more accurate quantification. Examples of these samples are verification or compensatory action sample results.

TABLE NOTATION

a. The lower limit of detection (LLD) is defined in Table Notation A. of Attachment 3.20, Maximum Values for Lower Limits of Detections[A,B] - REMP

b. Change samples at least once per 7 days and complete analyses within 48 hours after changing. Perform analyses at least once per 24 hours for 7 days following each shutdown, startup or THERMAL POWER change greater than 15% per hour of RATED THERMAL POWER. WHEN samples collected for 24 hours are analyzed, THEN the corresponding LLDs may be increased by a factor of 10. This requirement does not apply IF (1) analysis shows that DOSEQ I131 concentration in the RCS has not increased more than a factor of 3; and (2) the noble gas monitor shows that effluent activity has not increased more than a factor of 3. IF the daily sample requirement has been entered, THEN it can be exited early once both the radiation monitor reading and the RCS DOSEQ I131 levels have returned to within the factor of 3 of the pre-event 'normal'.[Ref. 5.2.1y]

c. Know the ratio of the sample flow rate to the sampled stream flow rate for the time period covered by each dose or dose rate calculation made in accordance with steps 3.2.4a, 3.2.4b, and 3.2.4c of this document.

   Sampling evolutions are not an interruption of a continuous release or sampling period.

d. The principal gamma emitters for which the LLD specification applies exclusively are the following radionuclides: Kr-87, Kr-88, Xe-133, Xe-133M, Xe-135 and Xe-138 for gaseous emissions and Mn-54, Fe-59, Co-58, Co-60, Zn-65, Mo-99, Cs-134, Cs-137, Ce-141 and Ce-144 for particulate emissions. This list does not mean that only these nuclides are to be detected and reported. Identify and report other peaks, which are measurable and identifiable, together with the above nuclides.

e. Releases from incinerated oil are discharged through the Auxiliary Boiler System. Account for releases based on pre-release grab sample data.

f. Collect samples of waste oil to be incinerated from the container in which the waste oil is stored (example: waste oil storage tanks, 55 gal. drums) prior to transfer to the Auxiliary Boiler System. Ensure samples are representative of container contents.

g. Obtain and analyze a gas marinelli grab sample weekly for noble gases effluent quantification.

h. Take tritium grab samples at least once per 24 hours when the refueling cavity is flooded.

i. Grab sampling of the Gland Seal Exhaust pathway need not be performed if the RMS low range channel (SRA-1805/2805) readings are less than 1E-6 μC/cc. Attach the RMS daily averages in lieu of sampling. This is based on operating experience indicating no activity is detected in the Gland Seal Exhaust below this value. Compensatory sampling for out of service monitor is still required in the event 1805/2805 is inoperable.

j. Sampling and analysis shall also be performed following shutdown, startup or THERMAL POWER change exceeding 15% of RATED THERMAL POWER within a one hour period. This noble gas sample shall be performed within four hours of the event. Evaluation of the sample results, based on previous samples, will be performed to determine if any further sampling is necessary.

Liquid Factors		
Monitor Description	Monitor Number	MRP #
U 1 SG Blowdown	1R19/24, DRS 3100/3200*	0.35
U 2 SG Blowdown	2R19/24, DRS 4100/4200*	0.35
U 1 & 2 Liquid Waste Discharge	RRS-1000	0.30

Sources of radioactivity released from the Turbine Room Sump (TRS) typically originate from the secondary cycle which is already being monitored by instrumentation that utilizes multiple release point (MRP) factors. The MRP is an administrative value that is used to assist with maintaining releases ALARA. The TRS has no actual radiation monitor, but utilizes an automatic compositor for monitoring what has been released. The batch release path, through RRS-1000, is the predominant release path by several magnitudes. Tritium is the predominant radionuclide released from the site and the radiation monitors do not respond to this low energy beta emitter. Based on this information and the large degree of conservatism built into the radiation monitor setpoint methodology it does not appear to warrant further reduction for the TRS release path since its source is predominantly the secondary cycle which is adequately covered by this factor.

Gaseous Factors			
Monitor Description	Monitor Number	Flow Rate (cfm)	MRP #
Unit 1			
Unit Vent	VRS-1500	186,600	0.54
Gland Seal Vent	SRA-1800	1,260	0.00363
Steam Jet Air Ejector	SRA-1900	3,600 (b)	0.01
Start Up FT Vent		1,536	0.004
Total		192,996	
Unit 2			
Unit Vent	VRS-2500	143,400	0.41
Gland Seal Vent	SRA-2800	5,508 (a)	0.02
Steam Jet Air Ejector	SRA-2900	3,600 (b)	0.01
Start Up FT Vent		1,536	0.004
Total		154,044	

* Either R-19, 24, DRS 3/4100 or 3/4200 can be used for blowdown monitoring as the Eberline monitors (DRS) are replacing the Westinghouse (R) monitors.

\# Nominal Values

a Two release points of 2,754 cfm each are totaled for this value.

b This is the total design maximum of the Start Up Air Ejectors. This is a conservative value for unit 1.

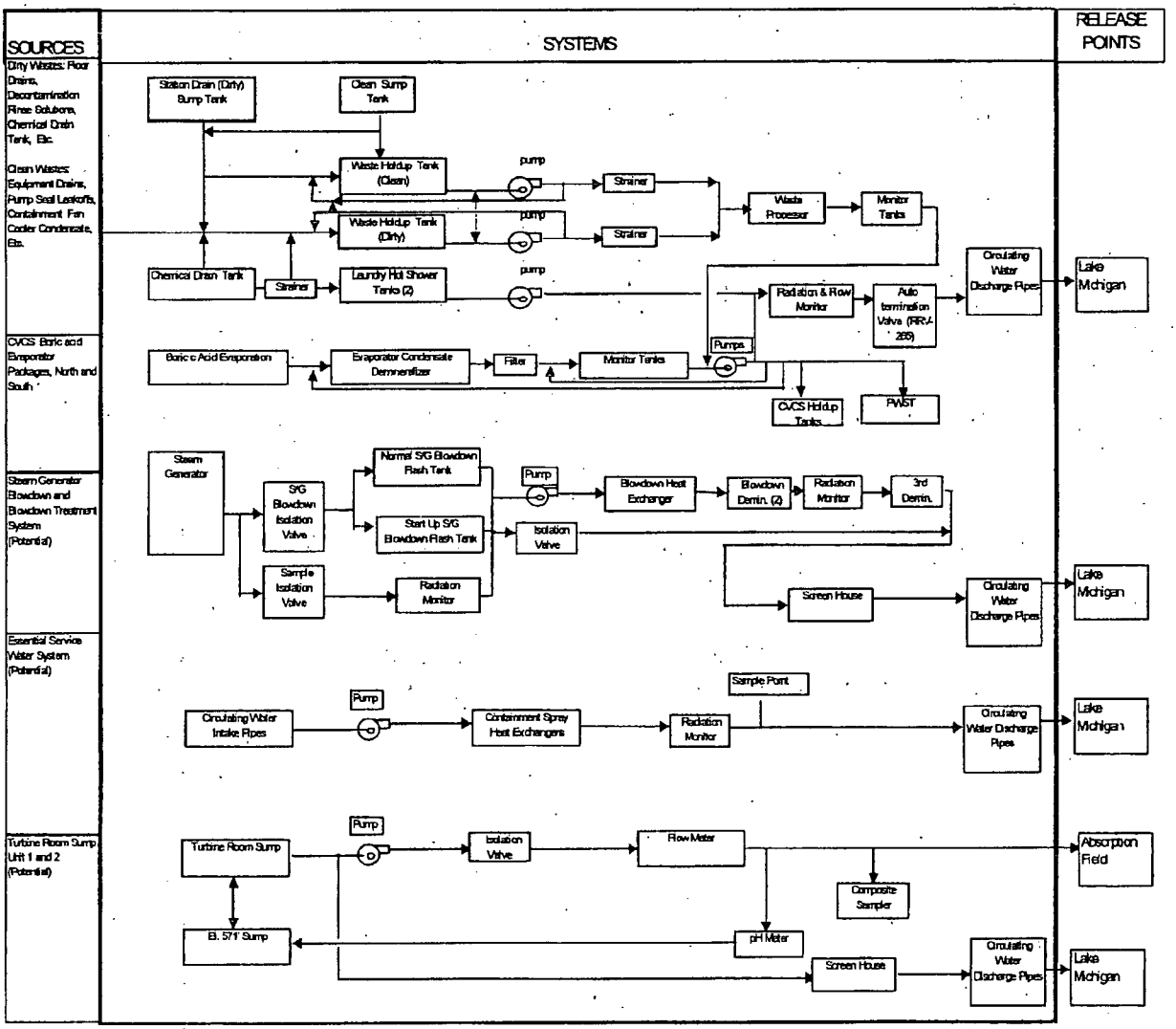
SOURCES
SYSTEMS
RELEASE POINTS
Dirty Wastes: Floor Drains, Decontamination Rinse Solutions, Chemical Drain Tank, Etc.
Clean Wastes: Equipment Drains, Pump Seal Leakoffs, Containment Fan Cooler Condensate, Etc.
CVCS Boric acid Evaporator Packages, North and South
Steam Generator Blowdown and Blowdown Treatment System (Potential)
Essential Service Water System (Potential)
Turbine Room Sump Unit 1 and 2 (Potential)
Station Drain (Dirty) Sump Tank
Clean Sump Tank
Waste Holdup Tank (Clean)
Waste Holdup Tank (Dirty)
pump
Strainer
Waste Processor
Monitor Tanks
Chemical Drain Tank
Laundry Hot Shower Tanks (2)
Radiation & Flow Monitor
Auto termination Valve (RRV-265)
Circulating Water Discharge Pipes
Lake Michigan
Boric c Acid Evaporation
Evaporator Condensate Demineralizer
Filter
Monitor Tanks
Pumps
CVCS Holdup Tanks
PWST
Steam Generator
SG Blowdown Isolation Valve
Normal SG Blowdown Flash Tank
Start Up SG Blowdown Flash Tank
Pump
Blowdown Heat Exchanger
Blowdown Demin. (2)
Radiation Monitor
3rd Demin.
Isolation Valve
Sample Isolation Valve
Screen House
Circulating Water Intake Pipes
Containment Spray Heat Exchangers
Sample Point
Turbine Room Sump
Isolation Valve
Flow Meter
Composite Sampler
Absorption Field
B. 571' Sump
pH Meter

SYSTEM	COMPONENTS		CAPACITY	FLOW RATE
	TANKS	PUMPS	(EACH)	(EACH)*
I Waste Disposal System				
+ Chemical Drain Tank	1	1	600 GAL.	20 GPM
+ Laundry & Hot Shower Tanks	2	1	600 GAL.	20 GPM
+ Monitor Tanks	4	2	21,600 GAL.	150 GPM
+ Waste Holdup Tanks	2		25,000 GAL.	
+ Waste Evaporators	3			30 GPM
+ Waste Evaporator Condensate Tanks	2	2	6,450 GAL	150 GPM
II Steam Generator Blowdown and Blowdown Treatment Systems				
+ Start-up Flash Tank (Vented)#	1		1,800 GAL.	580 GPM
+ Normal Flash Tank (Not Vented)	1		525 GAL.	100 GPM
+ Blowdown Treatment System		1		60 GPM
III Essential Service Water System				
+ Water Pumps		4		10,000 GPM
+ Containment Spray Heat Exchanger Outlet	4			3,300 GPM
IV Circulating Water Pumps				
Unit 1		3		230,000 GPM
Unit 2		4		230,000 GPM

* Nominal Values

\# The 580 gpm value is calculated from the Estimated Steam Generator Blowdown Flow vs. DRV Valve Position letter prepared by M. J. O'Keefe, dated 9/27/93. This is 830 gpm times the 70% that remains as liquid while the other 30% flashes to steam and exhausts out the flash tank vent.

This includes the following monitors: RRS-1000, DRS 3100, DRS 3200, DRS 4100, and DRS 4200. [Ref. 5.2.1p]

NUCLIDE	EFFICIENCY (cpm/µCi/cc)
I-131	3.78 E7
Cs-137	3.00 E7
Cs-134	7.93 E7
Co-60	5.75 E7
Co-58	4.58 E7
Cr-51	3.60 E6
Mn-54	3.30 E7
Zn-65	1.58 E7
Ag-110M	9.93 E7
Ba-133	4.85 E7
Ba-140	1.92 E7
Cd-109	9.58 E5
Ce-139	3.28 E7
Ce-141	1.92 E8
Ce-144	4.83 E6
Co-57	3.80 E7
Cs-136	1.07 E8
Fe-59	2.83 E7
Sb-124	5.93 E7
I-133	3.40 E7
I-134	7.23 E7
I-135	3.95 E7
Mo-99	8.68 E6
Na-24	4.45 E7
Nb-95	3.28 E7
Nb-97	3.50 E7
Rb-89	5.00 E7
Ru-103	3.48 E7
Ru-106	1.23 E7
Sb-122	2.55 E7
Sb-125	3.15 E7
Sn-113	7.33 E5
Sr-85	3.70 E7
Sr-89	2.88 E3
Sr-92	3.67 E7
Tc-99M	3.60 E7
Y-88	5.25 E7
Zr-95	3.38 E7
Zr-97	3.10 E7
Kr-85	1.56 E5
Kr-85M	3.53 E7
Kr-88	4.10 E7
Xe-131M	8.15 E5
Xe-133	7.78 E6
Xe-133M	5.75 E6
Xe-135	3.83 E7

Counting Efficiency Curve for R-19

Efficiency Factor = 4.2 E6 cpm/uCi/ml

(Based on empirical data taken during pre-operational testing with Cs-137)

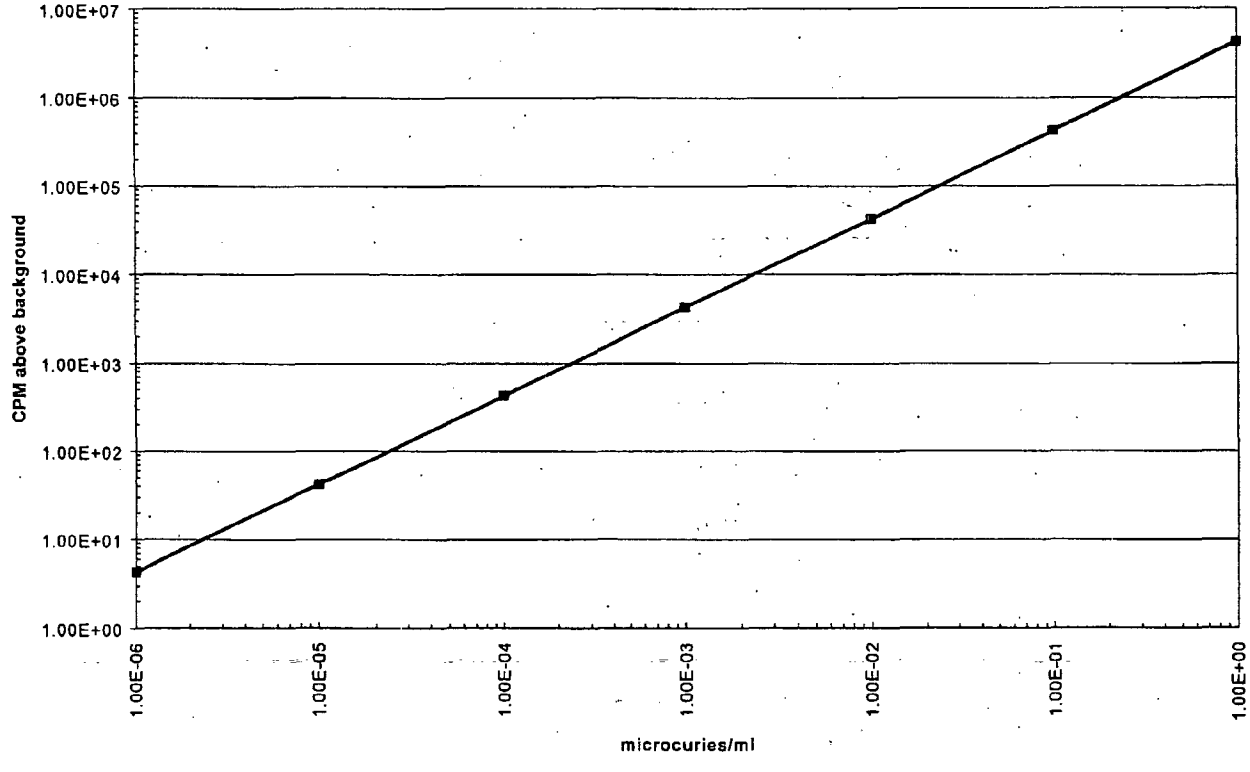

Counting Efficiency Curve for R-24

Efficiency Factor = 7.5E6 cpm/uCi/ml

(Based on empirical data taken during pre-operational testing with Mn-54)

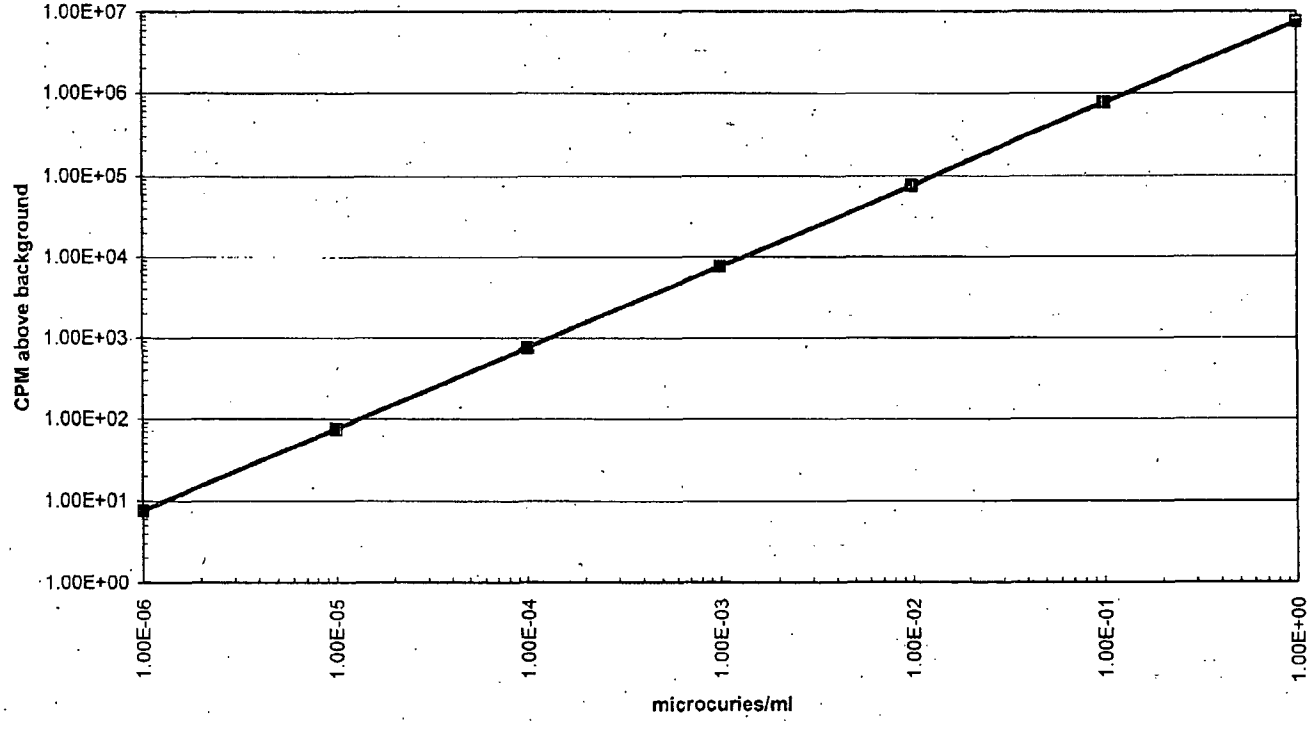

Counting Efficiency Curve for R-20 and R-28
Efficiency Factor = 4.3 E6 cpm/uCi/ml

(Based on empirical data taken during pre-operational testing with Co-58)

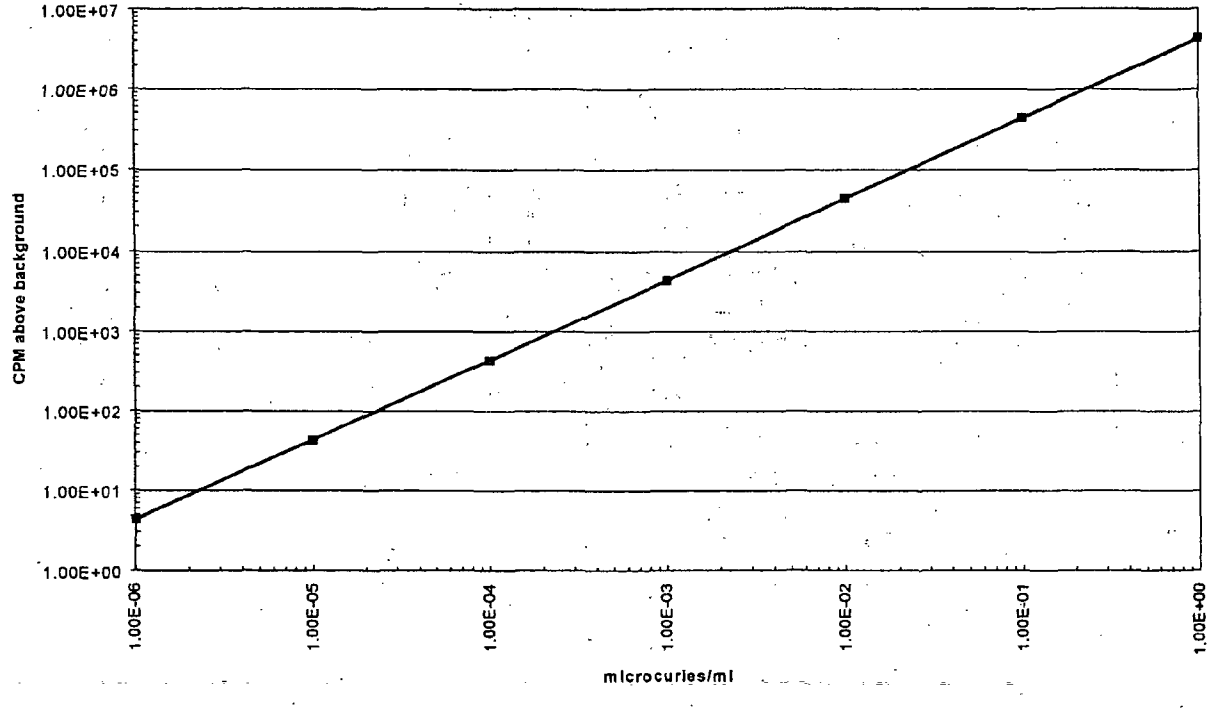

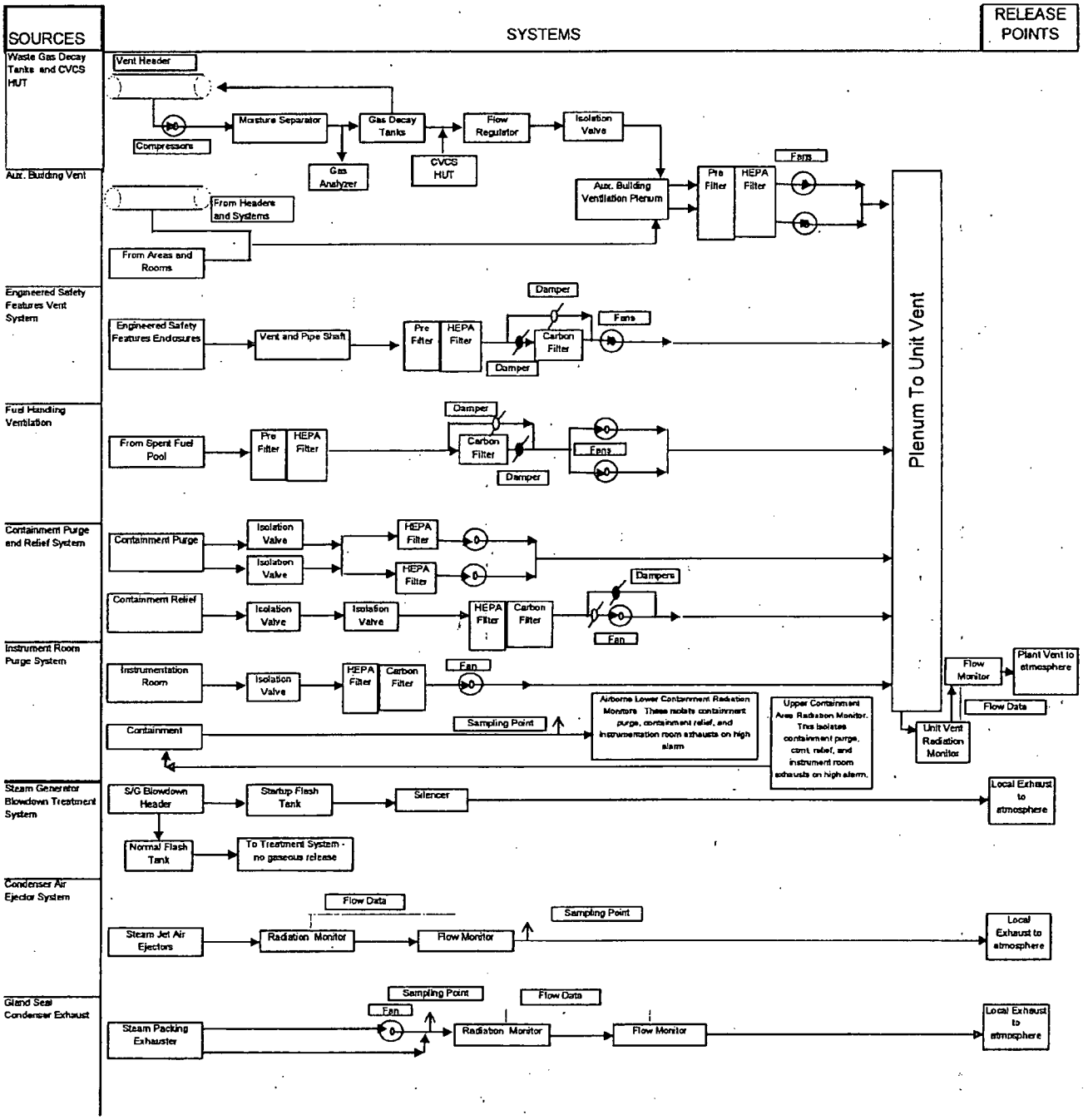
SOURCES
SYSTEMS
RELEASE POINTS
Waste Gas Decay Tanks and CVCS HUT
Vent Header
Compressors
Moisture Separator
Gas Decay Tanks
Flow Regulator
Isolation Valve
Gas Analyzer
CVCS HUT
Aux. Building Vent
From Headers and Systems
From Areas and Rooms
Aux. Building Ventilation Plenum
Pre Filter
HEPA Filter
Fans
Engineered Safety Features Vent System
Engineered Safety Features Enclosures
Vent and Pipe Shaft
Damper
Carbon Filter
Fuel Handling Ventilation
From Spent Fuel Pool
Containment Purge and Relief System
Containment Purge
Containment Relief
Dampers
Fan
Instrument Room Purge System
Instrumentation Room
Containment
Sampling Point
Airborne Lower Containment Radiation Monitors. These isolate containment purge, containment relief, and instrumentation room exhausts on high alarm.
Upper Containment Area Radiation Monitor. This isolates containment purge, cont. relief, and instrument room exhausts on high alarm.
Plenum To Unit Vent
Flow Monitor
Plant Vent to atmosphere
Flow Data
Unit Vent Radiation Monitor
Steam Generator Blowdown Treatment System
S/G Blowdown Header
Startup Flash Tank
Silencer
Local Exhaust to atmosphere
Normal Flash Tank
To Treatment System - no gaseous release
Condenser Air Ejector System
Steam Jet Air Ejectors
Radiation Monitor
Gland Seal Condenser Exhaust
Steam Packing Exhauster

SYSTEM	UNIT	EXHAUST FLOW RATE (CFM)	CAPACITY
I PLANT AUXILIARY BUILDING UNIT VENT	1 2	186,600 max 143,400 max	
WASTE GAS DECAY TANKS (8) AND CHEMICAL & VOLUME CONTROL SYSTEM HOLD UP TANKS (3)	1	125	4082 FT^3 @100 psig 28,741 ft^3 max @ 8#, 0 level
+ AUXILIARY BUILDING EXHAUST	1 2	72,660 59,400	
+ ENG. SAFETY FEATURES VENT	1 & 2	50,000	
+ FUEL HANDLING AREA VENT SYSTEM	1	30,000	
CONTAINMENT PURGE SYSTEM	1 & 2	32,000	
CONTAINMENT PRESSURE RELIEF SYSTEM	1 & 2	1,000	
INSTRUMENT ROOM PURGE SYSTEM	1 & 2	1,000	
II CONDENSER AIR EJECTOR SYSTEM			2 Release Points One for Each Unit
NORMAL STEAM JET AIR EJECTORS	1 & 2	230	
START UP STEAM JET AIR EJECTORS	1 & 2	3,600	
III TURBINE SEALS SYSTEM	1	1,260	
	2	5,508	2 Release Points for Unit 2
IV START UP FLASH TANK VENT	1	1,536	
	2	1,536	

+ Designates total flow for all fans.

$\overline{\chi/Q}$ GROUND AVERAGE (sec/m^3)

DIRECTION	DISTANCE (METERS)				
(WIND FROM)	594	2416	4020	5630	7240
N	4.17E-06	4.82E-07	2.25E-07	1.33E-07	9.32E-08
NNE	3.02E-06	3.64E-07	1.73E-07	1.04E-07	7.29E-08
NE	4.54E-06	5.31E-07	2.60E-07	1.59E-07	1.13E-07
ENE	7.16E-06	7.99E-07	4.04E-07	2.52E-07	1.80E-07
E	1.04E-05	1.13E-06	5.82E-07	3.66E-07	2.63E-07
ESE	1.07E-05	1.18E-06	6.04E-07	3.78E-07	2.72E-07
SE	1.15E-05	1.24E-06	6.36E-07	4.00E-07	2.88E-07
SSE	1.30E-05	1.42E-06	7.27E-07	4.57E-07	3.29E-07
S	1.41E-05	1.57E-06	7.92E-07	4.93E-07	3.54E-07
SSW	7.03E-06	7.81E-07	3.90E-07	2.41E-07	1.72E-07
SW	4.12E-06	4.73E-07	2.28E-07	1.38E-07	9.73E-08
WSW	3.29E-06	3.65E-07	1.76E-07	1.06E-07	7.52E-08
W	3.63E-06	4.11E-07	1.96E-07	1.18E-07	8.31E-08
WNW	3.02E-06	3.43E-07	1.61E-07	9.59E-08	6.71E-08
NW	3.22E-06	3.61E-07	1.71E-07	1.02E-07	7.16E-08
NNW	3.84E-06	4.29E-07	2.02E-07	1.20E-07	8.40E-08

DIRECTION	DISTANCE (METERS)				
(WIND FROM)	12067	24135	40225	56315	80500
N	4.64E-08	1.79E-08	8.89E-09	5.68E-09	3.56E-09
NNE	3.66E-08	1.43E-08	7.13E-09	4.56E-09	2.87E-09
NE	5.75E-08	2.30E-08	1.15E-08	7.41E-09	4.72E-09
ENE	9.30E-08	3.80E-08	1.91E-08	1.23E-08	7.90E-09
E	1.37E-07	5.65E-08	2.85E-08	1.83E-08	1.18E-08
ESE	1.41E-07	5.81E-08	2.93E-08	1.88E-08	1.22E-08
SE	1.50E-07	6.20E-08	3.12E-08	2.01E-08	1.30E-08
SSE	1.71E-07	7.06E-08	3.56E-08	2.29E-08	1.48E-08
S	1.84E-07	7.49E-08	3.77E-08	2.43E-08	1.56E-08
SSW	8.86E-08	3.59E-08	1.80E-08	1.15E-08	7.39E-09
SW	4.93E-08	1.96E-08	9.77E-09	6.27E-09	3.98E-09
WSW	3.80E-08	1.51E-08	7.53E-09	4.83E-09	3.07E-09
W	4.17E-08	1.64E-08	8.13E-09	5.20E-09	3.28E-09
WNW	3.34E-08	1.29E-08	6.41E-09	4.10E-09	2.57E-09
NW	3.57E-08	1.39E-08	6.89E-09	4.41E-09	2.77E-09
NNW	4.19E-08	3.35E-08	8.10E-09	5.19E-09	3.27E-09

DIRECTION TO - SECTOR			
N = A	E = E	S = J	W = N
NNE = B	ESE = F	SSW = K	WNW = P
NE = C	SE = G	SW = L	NW = Q
ENE = D	SSE = H	WSW = M	NNW = R

Worst Case $\overline{\chi/Q}$ = 2.04E-05 sec/m^3 in Sector H 2004

D/Q DEPOSITION (1/m^2)

DIRECTION (WIND FROM)	DISTANCE (METERS) 594	2416	4020	5630	7240
N	2.37E-08	2.29E-09	1.04E-09	5.44E-10	3.47E-10
NNE	9.86E-09	9.52E-10	4.32E-10	2.27E-10	1.45E-10
NE	1.29E-08	1.25E-09	5.67E-10	2.97E-10	1.90E-10
ENE	1.59E-08	1.54E-09	6.97E-10	3.66E-10	2.33E-10
E	1.87E-08	1.81E-09	8.20E-10	4.30E-10	2.75E-10
ESE	1.85E-08	1.79E-09	8.12E-10	4.26E-10	2.72E-10
SE	1.90E-08	1.83E-09	8.30E-10	4.36E-10	2.78E-10
SSE	2.40E-08	2.32E-09	1.05E-09	5.52E-10	3.52E-10
S	3.68E-08	3.56E-09	1.61E-09	8.46E-10	5.40E-10
SSW	2.30E-08	2.22E-09	1.01E-09	5.28E-10	3.37E-10
SW	2.22E-08	2.15E-09	9.74E-10	5.11E-10	3.26E-10
WSW	2.11E-08	2.04E-09	9.23E-10	4.84E-10	3.09E-10
W	2.00E-08	1.93E-09	8.74E-10	4.59E-10	2.93E-10
WNW	1.75E-08	1.69E-09	7.64E-10	4.01E-10	2.56E-10
NW	1.58E-08	1.53E-09	6.94E-10	3.64E-10	2.32E-10
NNW	2.30E-08	2.22E-09	1.01E-09	5.28E-10	3.37E-10

DIRECTION (WIND FROM)	DISTANCE (METERS) 12067	24135	40225	56315	80500
N	1.45E-10	4.72E-11	1.74E-11	9.27E-12	4.65E-12
NNE	6.36E-11	1.97E-11	7.24E-12	3.86E-12	1.94E-12
NE	8.07E-11	2.58E-11	9.51E-12	5.07E-12	2.54E-12
ENE	9.77E-11	3.17E-11	1.17E-11	6.23E-12	3.13E-12
E	1.14E-10	3.73E-11	1.37E-11	7.34E-12	3.68E-12
ESE	1.13E-10	3.70E-11	1.36E-11	7.26E-12	3.64E-12
SE	1.16E-10	3.78E-11	1.39E-11	7.42E-12	3.72E-12
SSE	1.47E-10	4.79E-11	1.76E-11	9.41E-12	4.72E-12
S	2.25E-10	7.34E-11	2.70E-11	1.44E-11	7.23E-12
SSW	1.41E-10	4.59E-11	1.69E-11	9.01E-12	4.52E-12
SW	1.36E-10	4.43E-11	1.63E-11	8.71E-12	4.37E-12
WSW	1.29E-10	4.20E-11	1.55E-11	8.26E-12	4.14E-12
W	1.22E-10	3.98E-11	1.47E-11	7.82E-12	3.92E-12
WNW	1.07E-10	3.48E-11	1.28E-11	6.84E-12	3.43E-12
NW	9.70E-11	3.16E-11	1.16E-11	6.20E-12	3.11E-12
NNW	1.41E-10	4.58E-11	1.69E-11	9.00E-12	4.52E-12

DIRECTION TO - SECTOR			
N = A	E = E	S = J	W = N
NNE = B	ESE = F	SSW = K	WNW = P
NE = C	SE = G	SW = L	NW = Q
ENE = D	SSE = H	WSW = M	NNW = R

Worst Case D/Q = 4.46E-08 1/m^2 in Sector A 2001

1. Performed or received annual update of $\overline{\chi/Q}$ and $\overline{D/Q}$ values. Provide a description of what has been received.

_____ / _____
Signature Date

_____
Environmental Department
(print name, title)

2. Worst $\overline{\chi/Q}$ and $\overline{D/Q}$ value and sector determined. PMP-6010-OSD-001 has been updated, if necessary. Provide an evaluation.

_____ / _____
Signature Date

_____
Environmental Department
(print name, title)

3. Review nuclide mix for gaseous and liquid release paths to determine if the dose conversion factor of total body is still applicable. Provide an evaluation.

_____ / _____
Signature Date

_____
Environmental Department
(print name, title)

4. Approved and verified by:

_____ / _____
Signature Date

_____
Environmental Department
(print name, title)

5. Copy to NS&A for information.

_____ / _____
Signature Date

_____
Environmental Department
(print name, title)

DOSE FACTORS FOR NOBLE GASES AND DAUGHTERS*

RADIONUCLIDE	TOTAL BODY DOSE FACTOR K_i (DFB_i) mrem m³ per μCi yr)	SKIN DOSE FACTOR L_i (DFS_i) (mrem m³ per μCi yr)	GAMMA AIR DOSE FACTOR M_i (DF^{γ}_i) (mrad m³ per μCi yr)	BETA AIR DOSE FACTOR N_i (DF^{β}_i) (mrad m³ per μCi yr)
Kr-83m	7.56E-02	- - -	1.93E+01	2.88E+02
Kr-85m	1.17E+03	1.46E+03	1.23E+03	1.97E+03
Kr-85	1.61E+01	1.34E+03	1.72E+01	1.95E+03
Kr-87	5.92E+03	9.73E+03	6.17E+03	1.03E+04
Kr-88	1.47E+04	2.37E+03	1.52E+04	2.93E+03
Kr-89	1.66E+04	1.01E+04	1.73E+04	1.06E+04
Kr-90	1.56E+04	7.29E+03	1.63E+04	7.83E+03
Xe-131m	9.15E+01	4.76E+02	1.56E+02	1.11E+03
Xe-133m	2.51E+02	9.94E+02	3.27E+02	1.48E+03
Xe-133	2.94E+02	3.06E+02	3.53E+02	1.05E+03
Xe-135m	3.12E+03	7.11E+02	3.36E+03	7.39E+02
Xe-135	1.81E+03	1.86E+03	1.92E+03	2.46E+03
Xe-137	1.42E+03	1.22E+04	1.51E+03	1.27E+04
Xe-138	8.83E+03	4.13E+03	9.21E+03	4.75E+03
Ar-41	8.84E+03	2.69E+03	9.30E+03	3.28E+03

* The listed dose factors are for radionuclides that may be detected in gaseous effluents, from Reg. Guide 1.109, Table B-1.

DOSE FACTORS FOR RADIOIODINES AND RADIOACTIVE PARTICULATE, IN GASEOUS EFFLUENTS FOR CHILD* Ref. 5.2.1ee and ff

RADIONUCLIDE	P_i INHALATION PATHWAY (mrem m³ per µCi yr)	P_i FOOD & GROUND PATHWAY (mrem m² sec per µCi yr)
H-3	1.12E+03	1.57E+03 #
P-32	2.60E+06	7.76E+10
Cr-51	1.70E+04	1.20E+07
Mn-54	1.58E+06	1.12E+09
Fe-59	1.27E+06	5.92E+08
Co-58	1.11E+06	5.97E+08
Co-60	7.07E+06	4.63E+09
Zn-65	9.95E+05	1.17E+10
Rb-86	1.98E+05	8.78E+09
Sr-89	2.16E+06	6.62E+09
Sr-90	1.01E+08	1.12E+11
Y-91	2.63E+06	6.72E+06
Zr-95	2.23E+06	3.44E+08
Nb-95	6.14E+05	4.24E+08
Ru-103	6.62E+05	1.55E+08
Ru-106	1.43E+07	3.01E+08
Ag-110m	5.48E+06	1.99E+10
I-131	1.62E+07	4.34E+11
I-132	1.94E+05	1.78E+06
I-133	3.85E+06	3.95E+09
I-135	7.92E+05	1.22E+07
Cs-134	1.01E+06	4.00E+10
Cs-136	1.71E+05	3.00E+09
Cs-137	9.07E+05	3.34E+10
Ba-140	1.74E+06	1.46E+08
Ce-141	5.44E+05	3.31E+07
Ce-144	1.20E+07	1.91E+08

*As Sr-90, Ru-106 and I-131 analyses are performed, THEN use P_i given in P-32 for nonlisted radionuclides.

The units for both H3 factors are the same, mrem m³ per µCi yr

[Ref. 5.2.1v, 5.2.1x, 5.2.1t]

SAMPLE STATION	DESCRIPTION/ LOCATION	SAMPLE TYPE	SAMPLE FREQUENCY	ANALYSIS TYPE	ANALYSIS FREQUENCY
ON-SITE AIRBORNE AND DIRECT RADIATION (TLD) STATIONS					
ONS-1 (T-1)	1945 ft @ 18° from Plant Axis	Airborne Particulate	Weekly	Gross Beta	Weekly
				Gamma Isotopic	Quart. Comp.
		Airborne Radioiodine		I-131	Weekly
		TLD	Quarterly	Direct Radiation	Quarterly
ONS-2 (T-2)	2338 ft @ 48° from Plant Axis	Airborne Particulate	Weekly	Gross Beta	Weekly
				Gamma Isotopic	Quart. Comp.
		Airborne Radioiodine		I-131	Weekly
		TLD	Quarterly	Direct Radiation	Quarterly
ONS-3 (T-3)	2407 ft @ 90° from Plant Axis	Airborne Particulate	Weekly	Gross Beta	Weekly
				Gamma Isotopic	Quart. Comp.
		Airborne Radioiodine		I-131	Weekly
		TLD	Quarterly	Direct Radiation	Quarterly
ONS-4 (T-4)	1852 ft. @ 118° from Plant Axis	Airborne Particulate	Weekly	Gross Beta	Weekly
				Gamma Isotopic	Quart. Comp.
		Airborne Radioiodine		I-131	Weekly
		TLD	Quarterly	Direct Radiation	Quarterly
ONS-5 (T-5)	1895 ft @ 189° from Plant Axis	Airborne Particulate	Weekly	Gross Beta	Weekly
				Gamma Isotopic	Quart. Comp.
		Airborne Radioiodine		I-131	Weekly
		TLD	Quarterly	Direct Radiation	Quarterly
ONS-6 (T-6)	1917 ft @ 210° from Plant Axis	Airborne Particulate	Weekly	Gross Beta	Weekly
				Gamma Isotopic	Quart. Comp.
		Airborne Radioiodine		I-131	Weekly
		TLD	Quarterly	Direct Radiation	Quarterly
T-7	2103 ft @ 36° from Plant Axis	TLD	Quarterly	Direct Radiation	Quarterly
T-8	2208 ft @ 82° from Plant Axis	TLD	Quarterly	Direct Radiation	Quarterly
T-9	1368 ft @ 149° from Plant Axis	TLD	Quarterly	Direct Radiation	Quarterly
T-10	1390 ft @ 127° from Plant Axis	TLD	Quarterly	Direct Radiation	Quarterly
T-11	1969 ft @ 11° from Plant Axis	TLD	Quarterly	Direct Radiation	Quarterly
T-12	2292 ft @ 63° from Plant Axis	TLD	Quarterly	Direct Radiation	Quarterly

CONTROL AIRBORNE AND DIRECT RADIATION (TLD) STATIONS					
NBF	15.6 miles SSW New Buffalo, MI	Airborne Particulate	Weekly	Gross Beta	Weekly
				Gamma Isotopic	Quart. Comp.
		Airborne Radioiodine		I-131	Weekly
		TLD	Quarterly	Direct Radiation	Quarterly
SBN	26.2 miles SE South Bend, IN	Airborne Particulate	Weekly	Gross Beta	Weekly
				Gamma Isotopic	Quart. Comp.
		Airborne Radioiodine		I-131	Weekly
		TLD	Quarterly	Direct Radiation	Quarterly
DOW	24.3 miles ENE Dowagiac, MI	Airborne Particulate	Weekly	Gross Beta	Weekly
				Gamma Isotopic	Quart. Comp.
		Airborne Radioiodine		I-131	Weekly
		TLD	Quarterly	Direct Radiation	Quarterly
COL	18.9 miles NNE Coloma, MI	Airborne Particulate	Weekly	Gross Beta	Weekly
				Gamma Isotopic	Quart. Comp.
		Airborne Radioiodine		I-131	Weekly
		TLD	Quarterly	Direct Radiation	Quarterly

SAMPLE STATION	DESCRIPTION/ LOCATION	SAMPLE TYPE	SAMPLE FREQUENCY	ANALYSIS TYPE	ANALYSIS FREQUENCY
OFF-SITE DIRECT RADIATION (TLD) STATIONS					
OFT-1	4.5 miles NE, Pole #B294-44	TLD	Quarterly	Direct Radiation	Quarterly
OFT-2	3.6 miles, NE, Stevensville Substation	TLD	Quarterly	Direct Radiation	Quarterly
OFT-3	5.1 miles NE, Pole #B296-13	TLD	Quarterly	Direct Radiation	Quarterly
OFT-4	4.1 miles, E, Pole #B350-72	TLD	Quarterly	Direct Radiation	Quarterly
OFT-5	4.2 miles ESE, Pole #B387-32	TLD	Quarterly	Direct Radiation	Quarterly
OFT-6	4.9 miles SE, Pole #B426-1	TLD	Quarterly	Direct Radiation	Quarterly
OFT-7	2.5 miles S, Bridgman Substation	TLD	Quarterly	Direct Radiation	Quarterly
OFT-8	4.0 miles S, Pole #B424-20	TLD	Quarterly	Direct Radiation	Quarterly
OFT-9	4.4 miles ESE, Pole #B369-214	TLD	Quarterly	Direct Radiation	Quarterly
OFT-10	3.8 miles S, Pole #B422-99	TLD	Quarterly	Direct Radiation	Quarterly
OFT-11	3.8 miles S, Pole #B423-12	TLD	Quarterly	Direct Radiation	Quarterly
GROUNDWATER (WELL WATER) SAMPLE STATIONS					
W-1	1969 ft @ 11° from Plant Axis	Groundwater	Quarterly	Gamma Isotopic	Quarterly
				Tritium	Quarterly
W-2	2302 ft @ 63° from Plant Axis	Groundwater	Quarterly	Gamma Isotopic	Quarterly
				Tritium	Quarterly
W-3	3279 ft @ 107° from Plant Axis	Groundwater	Quarterly	Gamma Isotopic	Quarterly
				Tritium	Quarterly
W-4	418 ft @ 301° from Plant Axis	Groundwater	Quarterly	Gamma Isotopic	Quarterly
				Tritium	Quarterly
W-5	404 ft @ 290° from Plant Axis	Groundwater	Quarterly	Gamma Isotopic	Quarterly
				Tritium	Quarterly
W-6	424 ft @ 273° from Plant Axis	Groundwater	Quarterly	Gamma Isotopic	Quarterly
				Tritium	Quarterly
W-7	1895 ft @ 189° from Plant Axis	Groundwater	Quarterly	Gamma Isotopic	Quarterly
				Tritium	Quarterly
W-8	1274 ft @ 54° from Plant Axis	Groundwater	Quarterly	Gamma Isotopic	Quarterly
				Tritium	Quarterly
W-9	1447 ft @ 22° from Plant Axis	Groundwater	Quarterly	Gamma Isotopic	Quarterly
				Tritium	Quarterly
W-10	4216 ft @ 129° from Plant Axis	Groundwater	Quarterly	Gamma Isotopic	Quarterly
				Tritium	Quarterly
W-11	3206 ft @ 153° from Plant Axis	Groundwater	Quarterly	Gamma Isotopic	Quarterly
				Tritium	Quarterly
W-12	2631 ft @ 162° from Plant Axis	Groundwater	Quarterly	Gamma Isotopic	Quarterly
				Tritium	Quarterly
W-13	2152 ft @ 182° from Plant Axis	Groundwater	Quarterly	Gamma Isotopic	Quarterly
				Tritium	Quarterly
W-14	1780 ft @ 164° from Plant Axis	Groundwater	Quarterly	Gamma Isotopic	Quarterly
				Tritium	Quarterly
W-15	725 ft @ 202° from Plant Axis NPDES well MW-12C	Groundwater	Quarterly	Gamma Isotopic	Quarterly
				Tritium	Quarterly
DRINKING WATER					
STJ	St. Joseph Public Intake Sta. 9 mi. NE	Drinking water	Once per calendar Day	Gross Beta	14 day Comp.
				Gamma Isotopic	14 day Comp.
				I-131	14 day Comp.
				Tritium	Quart. Comp.
LTW	Lake Twp. Public Intake Sta. 0.6 mi. S	Drinking water	Once per calendar Day	Gross Beta	14 day Comp.
				Gamma Isotopic	14 day Comp.
				I-131	14 day Comp.
				Tritium	Quart. Comp

SAMPLE STATION	DESCRIPTION/ LOCATION	SAMPLE TYPE	SAMPLE FREQUENCY	ANALYSIS TYPE	ANALYSIS FREQUENCY
SURFACE WATER					
SWL-2	Plant Site Boundary - South ~ 500 ft. south of Plant Centerline	Surface Water	Once per calendar Day	Gamma Isotopic	Month. Comp.
				Tritium	Quart. Comp
SWL-3	Plant Site Boundary - North ~ 500 ft. north of Plant Centerline	Surface Water	Once per calendar Day	Gamma Isotopic	Month. Comp.
				Tritium	Quart. Comp.
SEDIMENT					
SL-2	Plant Site Boundary - South ~ 500 ft. south of Plant Centerline	Sediment	Semi-Ann.	Gamma Isotopic	Semi-Annual
SL-3	Plant Site Boundary - North ~ 500 ft. north of Plant Centerline	Sediment	Semi-Ann.	Gamma Isotopic	Semi-Annual
SL-4	Plant Site Boundary - South South storm drain culvert to lake	Sediment	Quarterly	Gamma Isotopic	Quarterly
SL-5	Plant Site Boundary - North North storm drain culvert to lake	Sediment	Quarterly	Gamma Isotopic	Quarterly
SL-4 & 5 are data collection points only not actual REMP samples					
GROUNDWATER (RADIOACTIVE MATERIAL STORAGE FACILITY [MAUSOLEUM]) SAMPLE STATIONS					
SG-1	0.8 mi. @ 95° from Plant Axis	Groundwater	Quarterly	Gross Alpha	Quarterly
				Gross Beta	Quarterly
				Gamma Isotopic	Quarterly
SG-2	0.7 mi. @ 92° from Plant Axis	Groundwater	Quarterly	Gross Alpha	Quarterly
				Gross Beta	Quarterly
				Gamma Isotopic	Quarterly
SG-4	0.7 mi. @ 93° from Plant Axis	Groundwater	Quarterly	Gross Alpha	Quarterly
				Gross Beta	Quarterly
				Gamma Isotopic	Quarterly
SG-5	0.7 mi. @ 92° from Plant Axis	Groundwater	Quarterly	Gross Alpha	Quarterly
				Gross Beta	Quarterly
				Gamma Isotopic	Quarterly
SG-1, 2, 4 and 5 are data collection points only not actual REMP samples					
INGESTION - MILK Indicator Farms*					
		Milk	Once every 15 days	I-131	per sample
				Gamma Isotopic	per sample
		Milk	Once every 15 days	I-131	per sample
				Gamma Isotopic	per sample
		Milk	Once every 15 days	I-131	per sample
				Gamma Isotopic	per sample
INGESTION - MILK Background Farms*					
		Milk	Once every 15 days	I-131	per sample
				Gamma Isotopic	per sample
		Milk	Once every 15 days	I-131	per sample
				Gamma Isotopic	per sample

SAMPLE STATION	DESCRIPTION/ LOCATION	SAMPLE TYPE	SAMPLE FREQUENCY	ANALYSIS TYPE	ANALYSIS FREQUENCY
INGESTION – FISH					
ONS-N	0.3 mile N, Lake Michigan	Fish – edible portion	2/year	Gamma Isotopic	per sample
ONS-S	0.4 mile S, Lake Michigan	Fish – edible portion	2/year	Gamma Isotopic	per sample
OFS-N	3.5 mile N, Lake Michigan	Fish – edible portion	2/year	Gamma Isotopic	per sample
OFS-S	5.0 mile S, Lake Michigan	Fish – edible portion	2/year	Gamma Isotopic	per sample
INGESTION - FOOD PRODUCTS					
On Site					
ONS-G	Nearest sample to Plant in the highest D/Q land sector containing media.	Grapes	At time of harvest	Gamma Isotopic	At time of harvest
ONS-V		Broadleaf vegetation	At time of harvest	Gamma Isotopic	At time of harvest
Off Site					
OFS-G	In a land sector containing grapes, approximately 20 miles from the plant, in one of the less prevalent D/Q land sectors	Grapes	At time of harvest	Gamma Isotopic	At time of Harvest
OFS-V		Broadleaf vegetation	At time of harvest	Gamma Isotopic	At time of harvest
INGESTION - BROADLEAF IN LIEU OF MILK					
3 indicator samples of broad leaf vegetation collected at different locations, within eight miles of the plant in the highest annual average D/Q land sector.		Broadleaf vegetation	Monthly when available	Gamma Isotopic I131	Monthly when available
1 background sample of similar vegetation grown 15-25 miles distant in one of the less prevalent wind directions.		Broadleaf vegetation	Monthly when available	Gamma Isotopic I131	Monthly when available

Collect composite samples of Drinking and Surface water at least daily. Analyze particulate sample filters for gross beta activity 24 or more hours following filter removal. This will allow for radon and thoron daughter decay. If gross beta activity in air or water is greater than 10 times the yearly mean of control samples for any medium, perform gamma isotopic analysis on the individual samples.

If at least three indicator milk samples and one background milk sample cannot be obtained, three indicator broad leaf samples will be collected at different locations, within eight miles of the plant, in the land sector with the highest D/Q (refers to the highest annual average D/Q). Also, one background broad leaf sample will be collected 15 to 25 miles from the plant in one of the less prevalent D/Q land sectors.

* The three milk indicator and two background farms will be determined by the Annual Land Use Census and those that are willing to participate. **IF** it is determined that the milk animals are fed stored feed, **THEN** monthly sampling is appropriate for that time period.

[Ref. 5.2.1v]

Radionuclides	Food Product pCi/kg, wet	Water pCi/l	Milk pCi/l	Air Filter pCi/m^3	Fish pCi/kg, wet	Sediment pCi/kg, dry
Gross Beta		4*		0.01		
H-3		2000				
Ba-140		60	60			
La-140		15	15			
Cs-134	60	15	15	0.06	130	150
Cs-137	60	18	18	0.06	150	180
Zr-95		30				
Nb-95		15				
Mn-54		15			130	
Fe-59		30			260	
Zn-65		30			260	
Co-58		15			130	
Co-60		15			130	
I-131	60	1	1	0.07		

This Data is directly from our plant-specific Technical Specification.

* LLD for drinking water

NOTES

A. The Lower Limit of Detection (LLD) is defined as the smallest concentration of radioactive material in a sample that will be detected with 95% probability and 5% probability of falsely concluding that a blank observation represents a "real" signal.

For a particular measurement system (which may include radiochemical separation), the LLD is given by the equation:

$$LLD = \frac{4.66^{a} * S}{E * V * 2.22 * Y * e^{(-\lambda * \Delta t)}}$$

Where LLD is the a priori lower limit of detection as defined above (as pCi per unit mass or volume). Perform analysis in such a manner that the stated LLDs will be achieved under routine conditions. Occasionally background fluctuations, unavoidably small sample sizes, the presence of interfering radionuclides, or other uncontrollable circumstances may render these LLDs unachievable. It should be further clarified that the LLD represents the capability of a measurement system and not as an after the fact limit for a particular measurement.

S is the standard deviation of the background counting rate or of the counting rate of a blank sample as appropriate (as counts per minute).

E is the counting efficiency of the detection equipment as counts per transformation (that is, disintegration)

V is the sample size in appropriate mass or volume units

2.22 is the conversion factor from picocuries (pCi) to transformations (disintegrations) per minute

Y is the fractional radiochemical yield as appropriate

λ is the radioactive decay constant for the particular radionuclide

Δt is the elapsed time between the midpoint of sample collection (or end of sample collection period) and time of counting.

B. Identify and report other peaks which are measurable and identifiable, together with the radionuclides listed in Attachment 3.20, Maximum Values for Lower Limits of DetectionsA,B - REMP.

^{a} A 2.71 value may be added to the equation to provide correction for deviations in the Poisson distribution at low count rates, that is, 2.71 + 4.66 x S.

Radionuclides	Food Product pCi/kg, wet	Water pCi/l	Milk pCi/l	Air Filter pCi/m^3	Fish pCi/kg, wet
H-3		20000			
Ba-140		200	300		
La-140		200	300		
Cs-134	1000	30	60	10	1000
Cs-137	2000	50	70	20	2000
Zr-95		400			
Nb-95		400			
Mn-54		1000			30000
Fe-59		400			10000
Zn-65		300			20000
Co-58		1000			30000
Co-60		300			10000
I-131	100	2	3	0.90	

IF any of the above concentration levels are exceeded THEN submit a 30 day special report using the guidance supplied in PMP-7030-001-002, Licensee Event Reports, Special and Routine Reporting. Consider informing the State of Michigan and local officials about this exceedance also.

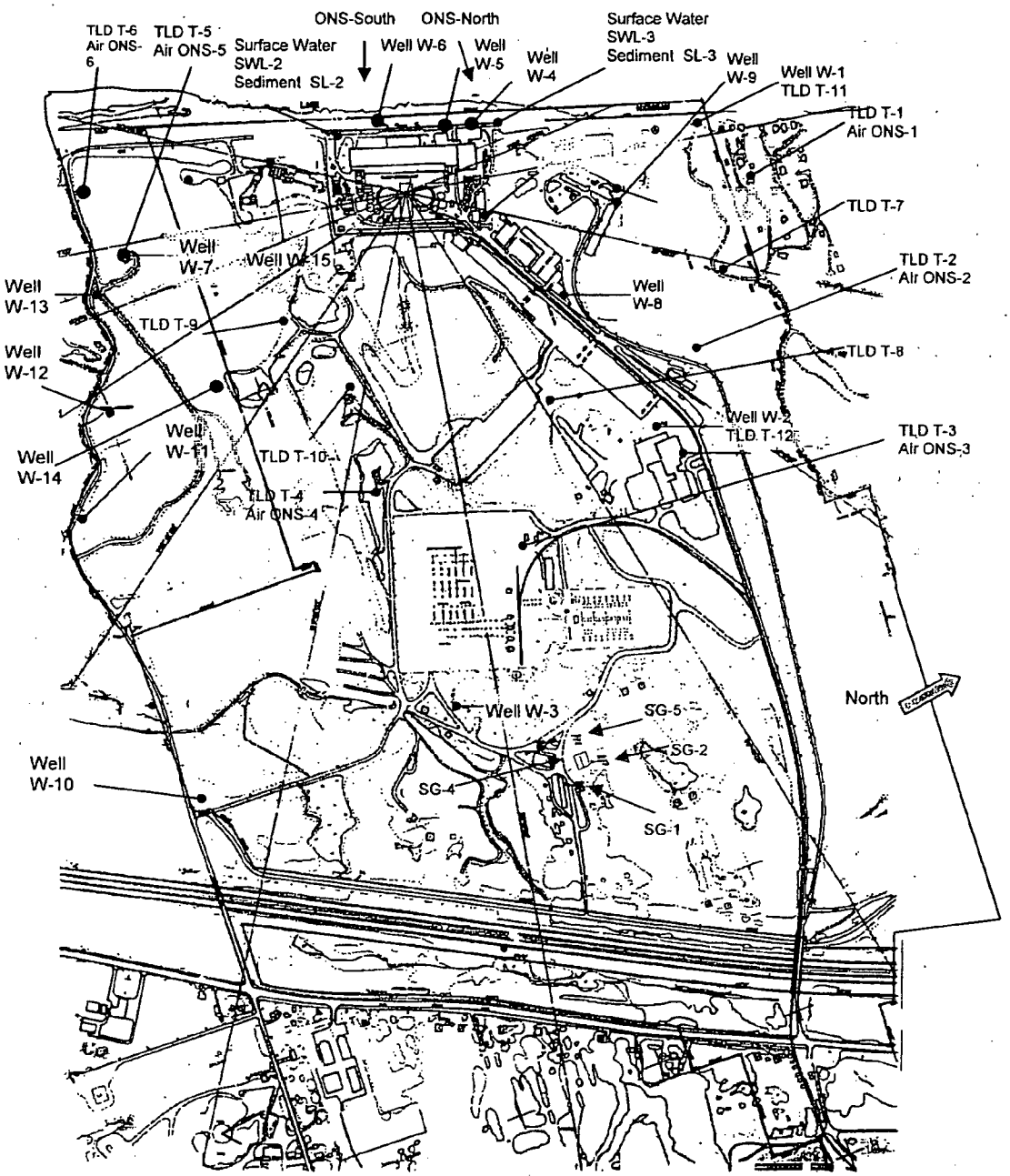

LEGEND

ONS-1 – ONS-6: Air Sampling Station
T-1 – T-12: TLD Sampling Station
W-1 – W-15: REMP Groundwater Wells
SWL- 2, 3: Surface Water Sampling Stations
SL-2 SL-3: Sediment Sampling Stations
ONS-N & S: Fish sampling locations
SG-1, 2, 4 and 5: Non REMP information Wells

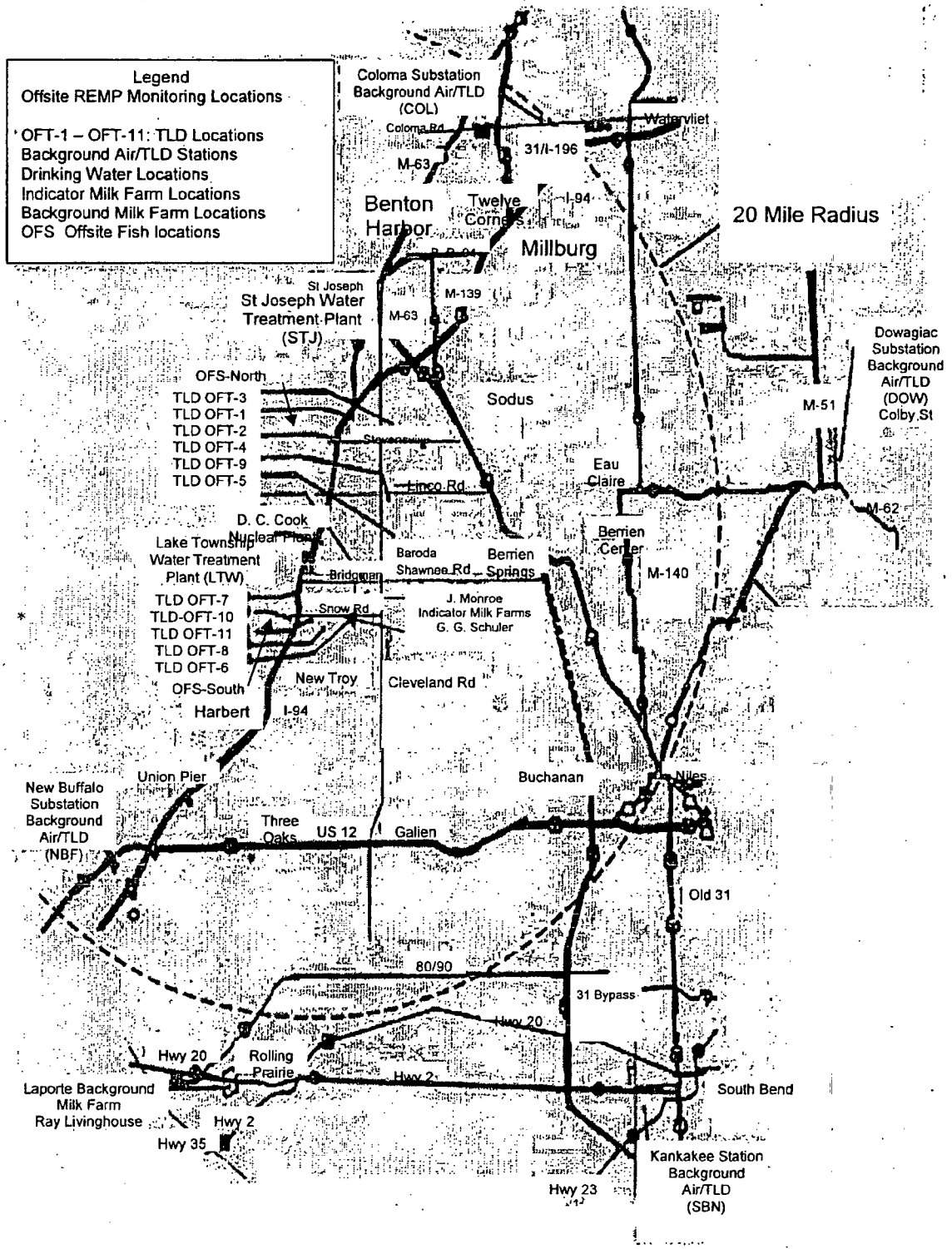
Legend
Offsite REMP Monitoring Locations
OFT-1 – OFT-11: TLD Locations
Background Air/TLD Stations
Drinking Water Locations
Indicator Milk Farm Locations
Background Milk Farm Locations
OFS Offsite Fish locations
Coloma Substation Background Air/TLD (COL)
Coloma Rd
M-63
31/I-196
Watervliet
Benton Harbor
Twelve Corners
I-94
Millburg
20 Mile Radius
St Joseph
St Joseph Water Treatment Plant (STJ)
M-139
M-63
Dowagiac Substation Background Air/TLD (DOW) Colby St
OFS-North
TLD OFT-3
TLD OFT-1
TLD OFT-2
TLD OFT-4
TLD OFT-9
TLD OFT-5
Sodus
M-51
Eau Claire
Linco Rd
M-62
D. C. Cook Nuclear Plant
Lake Township Water Treatment Plant (LTW)
Baroda
Shawnee Rd
Berrien Springs
Berrien Center
M-140
Bridgman
TLD OFT-7
TLD-OFT-10
TLD OFT-11
TLD OFT-8
TLD OFT-6
Snow Rd
J. Monroe
Indicator Milk Farms
G. G. Schuler
OFS-South
New Troy
Cleveland Rd
Harbert
I-94
New Buffalo Substation Background Air/TLD (NBF)
Union Pier
Buchanan
Niles
Three Oaks
US 12
Galien
Old 31
80/90
31 Bypass
Hwy 20
Hwy 20
Rolling Prairie
Hwy 2
South Bend
Laporte Background Milk Farm Ray Livinghouse
Hwy 2
Hwy 35
Kankakee Station Background Air/TLD (SBN)
Hwy 23

SAFETY EVALUATION BY THE OFFICE OF NUCLEAR REACTOR REGULATION RELATED TO DISPOSAL OF SLIGHTLY CONTAMINATED SLUDGE INDIANA MICHIGAN POWER COMPANY DONALD C. COOK NUCLEAR PLANT, UNIT NOS. 1 AND 2 DOCKET NOS. 50-315 AND 50-316 [Ref. 5.2.1r] (This is a 10 CFR 50.75 (g) item)

1. INTRODUCTION

By letters dated October 9, 1991, October 23, 1991, September 3, 1993, and September 29, 1993, Indiana Michigan Power Company (I&M) requested approval pursuant to 10 CFR 20.2002 for the on-site disposal of licensed material not previously considered in the Donald C. Cook Nuclear Plant Final Environmental Statement dated August 1973. Specifically, this request addresses actions taken in 1982 in which approximately 942 cubic meters of slightly contaminated sludge were removed from the turbine room sump absorption pond and pumped to the upper parking lot located within the exclusion area of the Donald C. Cook Nuclear Plant. The contaminated sludge was spread over an area of approximately 4.7 acres. The sludge contained a total radionuclide inventory of 8.89 millicuries (mCi) of Cesium-137, Cesium-136, Cesium-134, Cobalt-60 and Iodine-131.

In its submittal, the licensee addressed specific information requested in accordance with 10 CFR 20.2002(a), provided a detailed description of the licensed material, thoroughly analyzed and evaluated information pertinent to the impacts on the environment of the proposed disposal of licensed material, and committed to follow specific procedures to minimize the risk of unexpected exposures.

2. DESCRIPTION OF WASTE

The turbine room sump absorption pond is a collection place for water released from the plant's turbine room sump. The contamination was caused by a primary-to-secondary steam generator leak that entered the pond from the turbine building sump, a recognized release pathway. Sludge, consisting mainly of leaves and roots mixed with sand, built up in the pond. As a result, the licensee dredged the pond in 1982. The radioactive sludge removed by the dredging activities was pumped to a containment area located within the exclusion area. The total volume of 942 cubic meters of the radioactive sludge that was dredged from the bottom of the turbine room absorption pond was subsequently spread and made into a graveled road over the upper parking lot area of approximately 4.7 acres.

The principal radionuclides identified in the dredged material are listed below.

TABLE 1

NUCLIDE (half-life)	ACTIVITY (mCi) 1982	ACTIVITY (mCi) 1991
^{136}Cs (13.2 d)	0.03	NA*
^{134}Cs (2.1 y)	2.34	0.18
^{137}Cs (30.2 y)	5.59	4.57
^{60}Co (5.6 y)	0.90	0.27
^{131}I (8.04 d)	0.03	NA*
TOTAL:	8.89	5.02

* NA: not applicable due to decay

3. RADIOLOGICAL IMPACTS

The licensee in 1982 evaluated the following potential exposure pathways to members of the general public from the radionuclides in the sludge:

(1) external exposure caused by groundshine from the disposal site;

(2) internal exposure caused by inhalation of re suspended radionuclide;
-AND-
(3) internal exposure from ingesting ground water.

The staff has reviewed the licensee's calculational methods and assumptions and finds that they are consistent with NUREG-1101, "Onsite Disposal of Radioactive Waste," Volumes 1 and 2, November 1986 and February 1987, respectively. The staff finds the assessment methodology acceptable. Table 2 lists the doses calculated by the licensee for the maximally exposed member of the public based on a total activity of 8.89 mCi disposed in that year.

TABLE 2

Pathway	Whole Body Dose Received by Maximally Exposed Individual (mrem/year)
Groundshine	0.94
Inhalation	0.94
Groundwater Ingestion	0.73
Total	2.61

On July 5, 1991, the licensee re-sampled the onsite disposal area to assure that no significant impacts and adverse effects had occurred. A counting procedure based on the appropriate environmental low-level doses was used by the licensee; however, no activity was detected during the re-sampling[1]. This is consistent with the original activity of the material and the decay time. The 1991 re-sampling process used by the licensee confirms that the environmental impact of the 1982 disposal was very small. The staff finds the licensee's methodology acceptable.

4. ENVIRONMENTAL FINDING AND CONCLUSION

The staff has evaluated the environmental impact of the proposal to leave in place approximately 942 cubic meters of slightly contaminated sludge underneath the upper parking lot on the Donald C. Cook Nuclear Plant site.

In 1982, the licensee evaluated the potential exposure to members of the general public from the radionuclides in the sludge and calculated the potential dose to the maximally exposed member of the public, based on a total activity of 8.89 mCi disposed in that year, to be 2.61 mrem/yr. The staff has reviewed the licensee's calculational methods and assumptions and found that they are consistent with NUREG-1101, Onsite Disposal of Radioactive Waste, Volumes 1 and 2, November 1986 and February 1987, respectively. The staff finds the assessment methodology acceptable. For comparison, the radiation from the naturally occurring radionuclides in soils and rocks plus cosmic radiation gives a person in Michigan a whole-body dose rate of about 89 mrem per year outdoors. Subsequent licensee sampling in 1991 identified no detectable activity. The staff evaluated the licensee's sampling and analysis methodology and finds it acceptable. The results, of the 1991 re-sampling by the licensee, confirm that the environmental impact of the 1982 disposal was very small.

Based on the above the staff finds that the potential environmental impacts of leaving the contaminated sludge in place are insignificant. With regard to the non-radiological impacts, the staff has determined that leaving the soil in place represents the least impact to the environment.

5. CONCLUSION

Based on the staff's review of the licensee's discussion, the staff finds the licensee's proposal to retain the material in its present location as documented in this Safety Evaluation acceptable. Also, this Safety Evaluation shall be permanently incorporated as an appendix to the licensee's Offsite Dose Calculation Manual (ODCM), and any future modifications shall be reported to NRC in accordance with the applicable ODCM change protocol.

---

[1] I&M letter from E. E. Fitzpatrick to the NRC Document Control Desk, September 29, 1993

Therefore, the licensee's proposal to consider the slightly contaminated sludge disposed by retention in place in the manner described in the Donald C. Cook Nuclear Plant submittals date October 9, 1991, October 23, 1991, September 3, 1993, and September 29, 1993, is acceptable.

The guidelines used by the NRC staff for onsite disposal of licensed material and the staff's evaluation of how each guideline has been satisfied are given in Table 3.

Pursuant to 10 CFR 51.32, the Commission has determined that granting of this approval will have no significant impact on the environment (October 31, 1994, 59 FR 54477).

Principal Contributor: J. Minns

Date: November 10, 1994

TABLE 3

20.2002 GUIDELINE FOR ONSITE DISPOSAL[2]	STAFF'S EVALUATION
1. The radioactive material should be disposed of in such a manner that it is unlikely that the material would be recycled.	1. Due to the nature of the disposed material, recycling to the general public is not considered likely.
2. Doses to the total body and any body organ of a maximally exposed individuals (a member of the general public or a non-occupationally exposed worker) from the probable pathways of exposure to the disposed material should be less than 1 mrem/year.	2. This guideline was addressed in Table 2. Although the 2.61 mrem/yr is greater than staff's guidelines, the staff finds it acceptable due to 9 yrs decay following analysis and the expected lack of activity detected in the 1991 survey.
3. Doses to the total body and any body organ of an inadvertent intruder from the probable pathways of exposure should be less than 5 mrem/year.	3. Because the material will be land-spread, the staff considers the maximally exposed individual scenario to also address the intruder scenario.
4. Doses to the total body and any body organ of an individual from assumed recycling of the disposed material at the time the disposal site is released from regulatory control from all likely pathways of exposure should be less than 1 mrem.	4. Even if recycling were to occur after release from regulatory control, the dose to a maximally exposed member of the public is not expected to exceed 1 mrem/year, based on exposure scenarios considered in this analysis.

---

[2] E. F. Branagan, Jr. and F. J. Congel, "Disposal of Contaminated Radioactive Wastes from Nuclear Power Plants," presented at the Health Physics Society's Mid-Year Symposium on Health Physics Consideration in Decontamination/Decommissioning, Knoxville, Tennessee, February 1986, (CONF-860203).

Document No.: PMP-6010-OSD-001 Revision No.: 021
Title: OFF-SITE DOSE CALCULATION MANUAL
Alteration Category: Minor Revision
CDI/50.59 No(s): N/A

PORC Mtg. No.: 4244
CR No.: 06058026
Superceding Procedure(s): N/A

Temporary Procedure Expiration Date:
Temporary Change Expiration Date:
Temporary Procedure/Change Ending Activity: N/A
Effective Date: 31-Jul-2006 12:00:00 AM

Approvals

Name	Review/Approval Type/Capacity	Date
Harner, Jon	Technical Review	24-Jul-2006 01:31:09 PM
Newmiller, Julie	PORC	28-Jul-2006 01:05:05 PM
Mottl, Teri	Approval Authority	31-Jul-2006 07:32:19 AM

Signature Comments

PROCEDURE APPROVAL AUTHORIZED BY L. WEBER, PLANT MANAGER. TLM

REVISION SUMMARY

Procedure No.: PMP-6010-OSD-001 Rev. No.: 21
Title: OFF-SITE DOSE CALCULATION MANUAL

Alteration	Justification
General	Revision was created to address comments identified as part of the "D. C. Cook Nuclear Plant Groundwater Protection Project Charter" generated in response to the Nuclear Energy Institutes "Industry Initiative on Managing Situation Involving Inadvertent Radiological Releases to Groundwater" (CR 06058026).
10 CFR 50.59 is not applicable to this procedure revision.	Per definition in Attachment 1 of PMP-2010-PRC-002. This is an administrative procedure governing the conduct of facility operations.
Section 2 Definitions and Abbreviations: Added the definition of Total Fractional Level (TFL).	Per PMP-2010-PRC-002, Editorial Correction Criteria "q" moved definition from the procedure body to the definition section to clarify wording.
Step 3.5.2a.4 and a.5: Reworded and added clarifying information on report and communications.	Per PMP-2010-PRC-002, Editorial Correction Criteria "p" added clarifying information and reworded which does not change intent. Moved definition of TFL to section 2 Definitions for clarity.
Attachment 3.19: Deleted reference to non-REMP samples in the 'Groundwater Well Water Sample Stations' and 'Sediment' sections.	Per PMP-2010-PRC-002, Editorial Correction Criteria "p" removed references to non-REMP samples. Information appears elsewhere in appropriate plant documents (OSD-001, section 3.6 and RPP-401 data sheet 5).
Attachment 3.21: Reworded attachment note to provide users with guidance if limits are exceeded.	Per PMP-2010-PRC-002, Editorial Correction Criteria "p" added clarifying information and reworded which does not change intent. Refers user to appropriate procedure steps for guidance.

Office Information for Form Tracking Only - Not Part of Form

This is a free-form as called out in PMP-2010-PRC-002, Procedure Alteration, Review, and Approval.

TABLE OF CONTENTS

1 PURPOSE AND SCOPE 4

2 DEFINITIONS AND ABBREVIATIONS 4

3 DETAILS 6

3.1 Calculation of Off-Site Doses 6

3.1.1 Gaseous Effluent Releases 6

3.1.2 Liquid Effluent Releases 11

3.2 Limits of Operation and Surveillances of the Effluent Release Points 14

3.2.1 Radioactive Liquid Effluent Monitoring Instrumentation 14

3.2.2 Radioactive Gaseous Effluent Monitoring Instrumentation 16

3.2.3 Liquid Effluents 17

a. Concentration Excluding Releases via the Turbine Room Sump (TRS) Discharge 17

b. Concentration of Releases from the TRS Discharge 17

c. Dose 18

d. Liquid Radwaste Treatment System 18

3.2.4 Gaseous Effluents 21

a. Dose Rate 21

b. Dose – Noble Gases 21

c. Dose – Iodine-131, Iodine-133, Tritium, and Radioactive Material in Particulate Form 22

d. Gaseous Radwaste Treatment 22

3.2.5 Radioactive Effluents – Total Dose 25

3.3 Calculation of Alarm/Trip Setpoints 26

3.3.1 Liquid Monitors 27

a. Liquid Batch Monitor Setpoint Methodology 27

b. Liquid Continuous Monitor Setpoint Methodology 28

3.3.2 Gaseous Monitors 30

a. Plant Unit Vent 30

b. Waste Gas Storage Tanks 33

c. Containment Purge and Exhaust System 34

d. Steam Jet Air Ejector System (SJAE) 35

e. Gland Seal Condenser Exhaust 35

3.4 Radioactive Effluents Total Dose 36

3.5 Radiological Environmental Monitoring Program (REMP) 36

3.5.1 Purpose of the REMP 36

3.5.2 Conduct of the REMP 37

3.5.3 Annual Land Use Census 39

3.5.4 Interlaboratory Comparison Program 40

3.6 Radioactive Equipment Storage Facility (Mausoleum) Groundwater Monitoring Program 40

3.6.1 Purpose of the Radioactive Equipment Storage Facility (Mausoleum) Groundwater Radiological Monitoring Program 40

3.6.2 Conduct of the Radioactive Equipment Storage Facility (Mausoleum) Groundwater Radiological Monitoring Program 41

3.7 Meteorological Model 41

3.8 Reporting Requirements 41

3.8.1 Annual Radiological Environmental Operating Report (AREOR) 41

3.8.2 Annual Radiological Effluent Release Report (ARERR) 42

3.9 10 CFR 50.75 (g) Implementation 44

3.10 Reporting/Management Review 44

4 FINAL CONDITIONS 45

5 REFERENCES 45

SUPPLEMENTS

Attachment 3.1 Dose Factors for Various Pathways ..... Pages 48 - 51

Attachment 3.2 Radioactive Liquid Effluent Monitoring Instruments ..... Pages 52 - 54

Attachment 3.3 Radioactive Liquid Effluent Monitoring Instrumentation Surveillance Requirements ..... Pages 55 - 56

Attachment 3.4 Radioactive Gaseous Effluent Monitoring Instrumentation ..... Pages 57 - 59

Attachment 3.5 Radioactive Gaseous Effluent Monitoring Instrumentation Surveillance Requirements ..... Pages 60 - 61

Attachment 3.6 Radioactive Liquid Waste Sampling and Analysis Program ..... Pages 62 - 63

Attachment 3.7 Radioactive Gaseous Waste Sampling and Analysis Program ..... Pages 64 - 65

Attachment 3.8 Multiple Release Point Factors for Release Points ..... Page 66

Attachment 3.9 Liquid Effluent Release Systems ..... Page 67

Attachment 3.10 Plant Liquid Effluent Parameters ..... Page 68

Attachment 3.11 Volumetric Detection Efficiencies for Principle Gamma Emitting Radionuclides for Eberline Liquid Monitors ..... Page 69

Attachment 3.12 Counting Efficiency Curves for R-19, and R-24 ..... Pages 70 - 71

Attachment 3.13 Counting Efficiency Curve for R-20, and R-28 ..... Page 72

Attachment 3.14 Gaseous Effluent Release Systems ..... Page 73

Attachment 3.15 Plant Gaseous Effluent Parameters ..... Page 74

Attachment 3.16 10 Year Average of 1995-2004 Data ..... Pages 75 - 76

Attachment 3.17 Annual Evaluation of $\overline{\chi/Q}$ and $\overline{D/Q}$ Values For All Sectors ..... Page 77

Attachment 3.18 Dose Factors ..... Pages 78 - 79

Attachment 3.19 Radiological Environmental Monitoring Program Sample Stations, Sample Types, Sample Frequencies ..... Pages 80 - 83

Attachment 3.20 Maximum Values for Lower Limits of Detections[A,B] - REMP ..... Pages 84 - 85

Attachment 3.21 Reporting Levels for Radioactivity Concentrations in Environmental Samples ..... Page 86

Attachment 3.22 On-Site Monitoring Location - REMP ..... Page 87

Attachment 3.23 Off-Site Monitoring Locations - REMP ..... Page 88

Attachment 3.24 Safety Evaluation By The Office Of Nuclear Reactor Regulation ..... Pages 89 - 91

1 PURPOSE AND SCOPE

NOTE:	This is an Administrative procedure and only the appropriate sections need be performed per PMP-2010-PRC-003, step 3.2.7.

- The Off-Site Dose Calculation Manual (ODCM) is the top tier document for the Radiological Environmental Monitoring Program (REMP), the Radioactive Effluent Controls Program (RECP), contains criteria pertaining to the previous Radiological Effluent Technical Specifications (RETS) as defined in NUREG-0472, and fully implements the requirements of Technical Specification 5.5.3, Radioactive Effluent Controls Program.

- The ODCM contains the methodology and parameters to be used in the calculation of off-site doses due to radioactive liquid and gaseous effluents and in the calculation of liquid and gaseous monitoring instrumentation alarm/trip setpoints.

- The ODCM provides flow diagrams detailing the treatment path and the major components of the radioactive liquid and gaseous waste management systems.

- The ODCM presents maps of the sample locations and the meteorological model used to estimate the atmospheric dispersion and deposition parameters.

- The ODCM specifically addresses the design characteristics of the Donald C. Cook Nuclear Plant based on the flow diagrams contained on the "OP Drawings" and plant "System Description" documents.

2 DEFINITIONS AND ABBREVIATIONS

Term:	Meaning:
S or shiftly	At least once per 12 hours
D or daily	At least once per 24 hours
W or weekly	At least once per 7 days
M or monthly	At least once per 31 days
Q or quarterly	At least once per 92 days
SA or semi-annually	At least once per 184 days
R	At least once per 549 days.
S/U	Prior to each reactor startup
P	Completed prior to each release
B	At least once per 24 months
Sampling evolution	Process of changing filters or obtaining grab samples

Member(s) of Public	All persons who are not occupationally associated with the plant. Does not include employees of the utility, its contractors or its vendors. Also excluded from this category are persons who enter the site to service equipment or to make deliveries. This category does include persons who use portions of the site for recreational, occupational or other purposes not associated with the plant.
Purge/purging	The controlled process of discharging air or gas from a confinement to maintain temperature, pressure, humidity, concentration or other operating condition, in such a manner that replacement air or gas is required to purify the confinement.
Source check	The qualitative assessment of Channel response when the Channel sensor is exposed to a radioactive source.
Total Fractional Level (TFL)	Total Fractional Level is defined as: $$TFL = \frac{C_{(1)}}{L_{(1)}} + \frac{C_{(2)}}{L_{(2)}} + \ldots \geq 1$$ Where: $C_{(1)}$ = Concentration of 1st detected nuclide $C_{(2)}$ = Concentration of 2nd detected nuclide $L_{(1)}$ = Reporting Level of 1st nuclide from Attachment 3.21, Reporting Levels for Radioactivity Concentrations in Environmental Samples. $L_{(2)}$ = Reporting Level of 2nd nuclide from Attachment 3.21, Reporting Levels for Radioactivity Concentrations in Environmental Samples.
Venting	Controlled process of discharging air or gas from a confinement to maintain temperature, pressure, humidity, concentration or other operating condition, in such a manner that replacement air or gas is not provided or required. Vent, used in system names, does not imply a venting process.

3 DETAILS

3.1 Calculation of Off-Site Doses

3.1.1 Gaseous Effluent Releases

a. The computer program MIDAS (Meteorological Information and Dose Assessment System) performs the calculation of doses from effluent releases. The site-specific parameters associated with MIDAS reside in the following subprograms:

- MIDER
- MIDEX
- MIDEL
- MIDEG
- MIDEN

b. The subprogram used to enter and edit gaseous release data is called MD1EQ (EQ). The data entered in EQ can be used to calculate the accumulation of dose to individual land based receptors based on hourly meteorology and release data. The air dose from this data is calculated via the XDAIR subprogram in MIDAS. It computes air dose results for use in Reg. Guide 1.21 reports and 10 CFR 50 Appendix I calculations based on routine releases.

c. The formula used for the calculation of the air dose is generated from site specific parameters and Reg. Guide 1.109 (Eq 7):

$$D_\gamma, D_\beta\, air = \frac{\overline{\chi}}{Q} * \Sigma[(M_i \text{ or } N_i) * Q_i * 3.17E-8]$$

Where;

D_γ , D_β air = the gamma or beta air dose in mrad/yr to an individual receptor

$\overline{\chi / Q}$ = the annual average or real time atmospheric dispersion factor over land, sec/m^3 from Attachment 3.16, 10 Year Average of 1995-2004 Data

M_i = the gamma air dose factor, mrad m^3 / yr μCi, from Attachment 3.18, Dose Factors

N_i = the beta air dose factor, mrad m^3 / yr μCi, from Attachment 3.18, Dose Factors

Q_i = the release rate of radionuclide, "i", in μCi/yr. Quantities are determined utilizing typical concentration times volumes equations that are documented in 12-THP-6010-RPP-606, Preparation of the Annual Radioactive Effluent Release Report.

3.17E-8 = number of years in a second (years/second).

d. The value for the ground average $\overline{\chi/Q}$ for each sector is calculated using equations shown below. Formula used for the calculation is generated from parameters contained in MIDAS Technical Manual, XDCALC (Eq 2).

$$\overline{\chi/Q} = \frac{2.03}{\bar{u}_{m_g} * x * \Sigma_g} * T_f$$

Where;

$$\Sigma_g = \textit{minimum of } \sqrt{\sigma_{z_g}^2 + \frac{H_c^2}{2\pi}} \textit{ or } \Sigma_g = \sqrt{3}\,\sigma_{z_g}$$

x = distance downwind of the source, meters. This information is found in parameter 5 of MIDEX.

$\bar{u}_{m_g}$ = wind speed for ground release, (meters/second)

σ_{z_g} = vertical dispersion coefficient for ground release, (meters), (Reg. Guide 1.111 Fig.1)

H_c = building height (meters) from parameter 28 of MIDER. (Containment Building = 49.4 meters)

T_f = terrain factor (= 1 for Cook Nuclear Plant) because we consider all our releases to be ground level (see parameter 5 in MIDEX).

$$2.03 = \sqrt{2 \div \pi} \div 0.393 \textit{ radians } (22.5°)$$

e. The dose due to gaseous releases, other than the air dose, is calculated by the MIDAS subprogram GASPRO. GASPRO computes the accumulation of dose to individual receptors based on hourly meteorology and release data. Calculations consider the effect of each important radionuclide for each pathway, organ, age group, distance and direction.

f. Calculations are based on the environmental pathways-to-man models in Reg. Guide 1.109. The program considers 7 pathways, 8 organs, and 4 age groups in 16 direction sectors. The distances used are taken from the MIDEG file.

g. The formulas used for the following calculations are generated from site specific parameters and Reg. Guide 1.109:

1. Total Body Plume Pathway (Eq 10)

$$Dose\ (mrem/year) = 3.17E-8 * \Sigma (Q_i * \overline{\chi/Q} * S_f * DFB_i)$$

Where;

S_f = shielding factor that accounts for the dose reduction due to shielding provided by residential structures during occupancy (maximum exposed individual = 0.7 per Table E-15 of Reg. Guide 1.109)

DFB_i = the whole body dose factor from Table B-1 of Reg. Guide 1.109, mrem - m^3 per μCi - yr. See Attachment 3.18, Dose Factors.

Q_i = the release rate of radionuclide "i", in μCi/yr

2. Skin Plume Pathway (Eq 11)

$$Dose\ (mrem/yr) = 3.17E-8 * S_f * \frac{\overline{\chi}}{Q} * [\Sigma(Q_i * 1.11 * DF_i^{\gamma}) + \Sigma(Q_i * DFS_i)]$$

Where;

1.11 = conversion factor, tissue to air, mrem/mrad

DF_i^{γ} = the gamma air dose factor for a uniform semi-infinite cloud of radionuclide "i", in mrad m^3/μCi yr from Table B-1, Reg. Guide 1.109. See Attachment 3.18, Dose Factors.

DFS_i = the beta skin dose factor for a semi-infinite cloud of radionuclide "i", in mrem m^3/μCi yr from Table B-1, Reg. Guide 1.109. See Attachment 3.18, Dose Factors.

3. Radionuclide and Radioactive Particulate Doses (Eq 13 & 14)

The dose, D_{IP} in mrem/yr, to an individual from radionuclides, other than noble gases, with half-lives greater than eight days in gaseous effluents released to unrestricted areas will be determined as follows:

$$D_{IP}\,(mrem/year) = 3.17E-8 * \Sigma(R_i * W * Q_{ic})$$

Where;

R_i = the most restrictive dose factor for each identified radionuclide "i", in m^2 mrem sec / yr μCi (for food and ground pathways) or mrem m^3 / yr μCi (for inhalation pathway), for the appropriate pathway

For sectors with existing pathways within five miles of the site, use the values of R_i for these real pathways, otherwise use pathways distance of five miles. See Attachment 3.1, Dose Factors for Various Pathways, for the maximum R_i values for the most controlling age group for selected radionuclides. R_i values were generated by computer code PARTS, see NUREG-0133, Appendix D.

W = the annual average or real time atmospheric dispersion parameters for estimating doses to an individual at the worst case location, and where W is further defined as:

W_{in} = $\overline{\chi / Q}$ for the inhalation pathway, in sec/m^3

-OR-

W_{fg} = $\overline{D / Q}$ for the food and ground pathways in 1/m^2

Q_{ic} = the release rate of those radioiodines, radioactive materials in particulate form and radionuclides other than noble gases with half-lives greater than eight days, in μCi/yr

h. This calculation is made for each pathway. The maximum computed dose at any receptor for each pathway is selected. These are summed together to get the dose to compare to the limits. Only the maximum of the cow milk or goat milk pathway (not both) is included in the total.

i. In addition to the above routines, the QUICKG routine of the MIDAS system is used to provide data used in the monthly reports due to its ability to use annual average meteorological data rather than real time data, thus shortening the run time involved.

j. Steam Generator Blowdown System (Start Up Flash Tank Vent)

1. The amount of radioiodine and other radionuclides that are released via the start up flash tank and its vent are calculated through actual sample results while the start up flash tank is in service.

2. The following calculation is performed to determine the amount of curies released through this pathway. (Plant established formula.)

$$Curies = \frac{\mu Ci}{ml} * GPM * time\ on\ flash\ tank\ (\min) * 3.785E-3$$

Where; 3.785E-3 = conversion factor, ml Ci/μCi gal.

3. The flow rate is determined from the blowdown valve position and the time on the start up tank. Chemistry Department performs the sampling and analysis of the samples.

4. This data is provided to the MIDAS computer and dose calculations (liquid and gas) are performed to ensure compliance with Subsection 3.2, Limits of Operation and Surveillances of the Effluent Release Points, dose limits. MIDAS uses the formulas given in step 3.1.2, Liquid Effluent Releases, to calculate doses to members of the public.

NOTE: This section provides the minimum requirements to be followed at Donald C. Cook Nuclear Plant. This would be used if actual sample data was not available each time the start up flash tank was in service.

5. The radioiodine release rate must be determined in accordance with the following equation every 31 day period whenever the specific activity of the secondary coolant system is greater than 0.01 μCi/g dose equivalent I-131.

6. **IF** the specific activity of the secondary coolant system is less than 0.01 μCi/g dose equivalent I-131, **THEN** the release rate must be determined once every six months. Use the following plant established equation:

$$Q_y = Ci * \quad IPF * \quad R_{sgb}$$

Where;

Q_y = the release rate of I-131 from the steam generator flash tank vent, in μCi/sec

Ci = the concentration (μCi/cc) of I-131 in the secondary coolant averaged over a period not exceeding seven days

IPF = the iodine partition factor for the Start Up Flash Tank, 0.05, in accordance with NUREG-0017

Rsgb = the steam generator blowdown rate to the start up flash tank, in cc/sec

7. Use the calculated release rate in monthly dose projections until the next determination to ensure compliance with Subsection 3.2, Limits of Operation and Surveillances of the Effluent Release Points, dose limits. Report the release rate calculations in the Annual Radioactive Effluent Release Report.

3.1.2 Liquid Effluent Releases

a. The calculation of doses from liquid effluent releases is also performed by the MIDAS program. The subprogram used to enter and edit liquid release data is called MD1EB (EB).

b. To calculate the individual dose (mrem), the program DS1LI (LD) is used. It computes the individual dose for up to 5 receptors for 14 liquid pathways due to release of radioactive liquid effluents. The pathways can be selected using the MIDEL program and changing the values in parameter 1. D.C. Cook Nuclear Plant uses 3 pathways: potable water, shoreline, and aquatic foods (fresh water sport fishing).

c. Steam Generators are sparged, sampled, and drained as batches usually early in outages to facilitate cooldown for entry into the steam generator. This is typically repeated prior to startup to improve steam generator chemistry for the startup. The sample stream, if being routed to the operating unit blowdown, is classified as a continuous release for quantification purposes to maintain uniformity with this defined pathway.

d. The equations used are generated from site specific data and Reg. Guide 1.109. They are as follows:

1. Potable Water (Eq 1)

$$R_{apj} = 1100 * \frac{U_{ap}}{M_P * F * 2.23E-3} * \sum_i Q_i * D_{aipj} e^{-\lambda_i t_p}$$

Where;

R_{apj} = the total annual dose to organ "j" to individuals of age groups "a" from all of the nuclides "i" in pathway "p", in mrem/year

1100 = conversion factor, yr ft^3 ρCi / Ci sec L

U_{ap} = a usage factor that specifies the exposure time or intake rate for an individual of age group "a" associated with pathway "p". Given in #29-84 of parameter 4 in MIDEL and Reg. Guide 1.109 Table E-5. See Attachment 3.1, Dose Factors for Various Pathways.

M_p = the dilution factor at the point of exposure (or the point of withdrawal of drinking water or point of harvest of aquatic food). Given in parameter 5 of MIDEL as 2.6.

F = the circulation water system water flow rate, in gpm, is used for evaluating dose via these pathways as dilution flow

2.23E-3 = conversion factor, ft^3 min / sec gal

Q_i = the release rate of nuclide "i" for the time period of the run input via MIDEB, Curies/year

D_{aipj} = the dose factor, specific to a given age group "a", radionuclide "i", pathway "p", and organ "j", which can be used to calculate the radiation dose from an intake of a radionuclide, in mrem/ρCi. These values are taken from tables E-11 through E-14 of Reg. Guide 1.109 and are located within the MIDAS code.

λ_i = the radioactive decay constant for radionuclide "i", in $hours^{-1}$

t_p = the average transit time required for nuclides to reach the point of exposure, 12 hours. This allows for nuclide transport through the water purification plant and the water distribution system. For internal dose, t_p is the total elapsed time between release of the nuclides and ingestion of food or water, in hours. Given as #25 of parameter 4 in MIDEL. (t_p = 12 hours)

2. Aquatic Foods (Eq 2)

$$R_{apj} = 1100 * \frac{U_{ap}}{M_P * F * 2.23E-3} * \sum_i Q_i * B_{ip} * D_{aipj} e^{-\lambda_i t_p}$$

Where,

B_{ip} = the equilibrium bioaccumulation factor for nuclide "i" in pathway "p", expressed as ρCi L / kg ρCi. The factors are located within the MIDAS code and are taken from Table A-1 of Reg. Guide 1.109. See Attachment 3.1, Dose Factors for Various Pathways.

t_p = the average transit time required for nuclides to reach the point of exposure, 24 hours. This allows for decay during transit through the food chain, as well as during food preparation. Given as #26 of parameter 4 in MIDEL. (t_p = 24 hours)

M_p = the dilution factor at the point of exposure, 1.0 for Aquatic Foods. Given in parameter 5 of MIDEL as 1.0.

3. Shoreline Deposits (Eq 3)

$$R_{apj} = 110{,}000 * \frac{U_{ap} * W}{M_p * F * 2.23E-3} * \sum_i Q_i * T_i * D_{aipj} \left[e^{-\lambda_i t_p}\right] * \left[1 - e^{-\lambda_i t_b}\right]$$

Where;

W = the shoreline width factor. Given as an input of 0.3 when running the program, based on Table A-2 in Reg. Guide 1.109.

T_i = the radioactive half-life of the nuclide, "i", in days

D_{aipj} = the dose factor for standing on contaminated ground, in mrem m^2 / hr ρCi. The values are taken from table E-6 of Reg. Guide 1.109 and are located within the MIDAS code. See Attachment 3.1, Dose Factors for Various Pathways.

t_b = the period of time for which sediment or soil is exposed to the contaminated water, 1.31E+5 hours. Given in MIDEL as item 6 of parameter 4.

t_p = the average transit time required for nuclides to reach the point of exposure, 0 hours. Given as #28 of parameter 4 in MIDEL.

110,000 = conversion factor yr ft^3 ρCi / Ci sec m^2 day, this accounts for proportionality constant in the sediment radioactivity model

M_p = the dilution factor at the point of exposure (or the point of withdrawal of drinking water or point of harvest of aquatic food). Given in parameter 5 of MIDEL as 2.6.

e. The MIDAS program uses the following plant specific parameters, which are entered by the operator.

1. Irrigation rate = 0
2. Fraction of time on pasture = 0
3. Fraction of feed on pasture = 0
4. Shore width factor = 0.3 (from Reg. Guide 1.109, Table A-2)

f. The results of DS1LI are printed in LDRPT (LP). These results are used in the monthly report of liquid releases.

g. In addition, the program DOSUM (DM) is used to search the results files of DS1LI to find the maximum liquid pathway individual doses. The highest exposures are then printed in a summary table. Each line is compared with the appropriate dose limit. The table provides a concise summary of off-site environmental dose calculations for inclusion in Annual Radioactive Effluent Release Reports, required by Reg. Guide 1.21.

NOTE:	The performance of each surveillance requirement must be within the specified time interval with a maximum allowable extension not to exceed 25% of the specified surveillance interval.

3.2 Limits of Operation and Surveillances of the Effluent Release Points

3.2.1 Radioactive Liquid Effluent Monitoring Instrumentation

a. The radioactive liquid effluent monitoring instrumentation channels shown in Attachment 3.2, Radioactive Liquid Effluent Monitoring Instruments, are operable with their alarm/trip setpoints set to ensure that the limits of step 3.2.3a, Concentration Excluding Releases via the Turbine Room Sump (TRS) Discharge, are not exceeded.

b. The applicability of each channel is shown in Attachment 3.2, Radioactive Liquid Effluent Monitoring Instruments.

c. With a radioactive liquid effluent monitoring instrumentation channel alarm/trip setpoint less conservative than a value which will ensure the limits of step 3.2.3a, Concentration Excluding Releases via the Turbine Room Sump (TRS) Discharge, are met without delay, suspend the release of radioactive liquid effluents monitored by the affected channel and reset or declare the monitor inoperable.

d. With one or more radioactive liquid effluent monitoring instrumentation channels inoperable, take the applicable action shown in Attachment 3.2, Radioactive Liquid Effluent Monitoring Instruments, with a maximum allowable extension not to exceed 25% of the surveillance interval, excluding the initial performance.

e. Determine the setpoints in accordance with the methodology described in step 3.3.1, Liquid Monitors. Record the setpoints.

f. Demonstrate each radioactive liquid effluent monitoring instrumentation channel is operable by performing the CHANNEL CHECK, SOURCE CHECK, CHANNEL CALIBRATION and CHANNEL OPERATIONAL TEST at the frequencies shown in Attachment 3.3, Radioactive Liquid Effluent Monitoring Instrumentation Surveillance Requirements.

BASES - LIQUID

The radioactive liquid effluent instrumentation is provided to monitor and control, as applicable, the releases of radioactive materials in liquid effluents during actual or potential releases. The alarm/trip setpoints for these instruments shall be calculated in accordance with NRC approved methods in the ODCM to ensure the alarm/trip will occur prior to exceeding the limits of 10 CFR Part 20. The OPERABILITY and use of this instrumentation is consistent with the requirements of General Design Criteria specified in Section 11.3 of the Final Safety Analysis Report for the Donald C. Cook Nuclear Plant. Due to the location of the Westinghouse ESW monitors, outlet line of containment spray heat exchanger (typically out of service), weekly sampling is required of the ESW system for radioactivity. This is necessary to ensure monitoring of a CCW to ESW system leak. [Ref 5.2.1gg]

3.2.2 Radioactive Gaseous Effluent Monitoring Instrumentation

a. The radioactive gaseous process and effluent monitoring instrumentation channels shown in Attachment 3.4, Radioactive Gaseous Effluent Monitoring Instrumentation, are operable with their alarm/trip setpoints set to ensure that the limits of step 3.2.4a, Dose Rate, are not exceeded.

b. The applicability of each channel is shown in Attachment 3.4, Radioactive Gaseous Effluent Monitoring Instrumentation.

c. With a radioactive gaseous process or effluent monitoring instrumentation channel alarm/trip setpoint less conservative than a value which will ensure that the limits of step 3.2.4a, Dose Rate, are met, without delay, suspend the release of radioactive gaseous effluents monitored by the affected channel and reset or declare the channel inoperable.

d. With less than the minimum number of radioactive gaseous effluent monitoring instrumentation channels operable, take the action shown in Attachment 3.4, Radioactive Gaseous Effluent Monitoring Instrumentation, with a maximum allowable extension not to exceed 25% of the surveillance interval, excluding the initial performance.

NOTE: This surveillance requirement does not apply to the waste gas holdup system hydrogen and oxygen monitors, as their setpoints are not addressed in this document.

e. Determine the setpoints in accordance with the methodology as described in step 3.3.2, Gaseous Monitors. Record the setpoints.

f. Demonstrate each radioactive gaseous process or effluent monitoring instrumentation channel is operable by performing the CHANNEL CHECK, SOURCE CHECK, CHANNEL CALIBRATION, and CHANNEL OPERATIONAL TEST operations at the frequencies shown in Attachment 3.5, Radioactive Gaseous Effluent Monitoring Instrumentation Surveillance Requirements.

BASES – GASEOUS

The radioactive gaseous effluent instrumentation is provided to monitor and control, as applicable, the releases of radioactive materials in gaseous effluents during actual or potential releases. The alarm/trip setpoints for these instruments shall be calculated in accordance with NRC approved methods in the ODCM to ensure the alarm/trip will occur prior to exceeding the limits of 10 CFR Part 20. The OPERABILITY and use of this instrumentation is consistent with the requirements of General Design Criteria specified in Section 11.3 of the Final Safety Analysis Report for the Donald C. Cook Nuclear Plant.

3.2.3 Liquid Effluents

a. Concentration Excluding Releases via the Turbine Room Sump (TRS) Discharge

1. Limit the concentration of radioactive material released via the Batch Release Tanks or Plant Continuous Releases (excluding only TRS discharge to the Absorption Pond) to unrestricted areas to the concentrations in 10 CFR 20, Appendix B, Table 2, Column 2, for radionuclides other than dissolved or entrained noble gases. For dissolved or entrained noble gases, limit the concentration to 2E-4 μCi/ml total activity.

2. With the concentration of radioactive material released from the site via the Batch Release Tanks or Plant Continuous Releases (other than the TRS to the Absorption Pond) exceeding the above limits, without delay restore the concentration to within the above limits.

3. Sample and analyze radioactive liquid wastes according to the sampling and analysis program of Attachment 3.6, Radioactive Liquid Waste Sampling and Analysis Program.

4. Use the results of radioactive analysis in accordance with the methods of this document to assure that all concentrations at the point of release are maintained within limits.

b. Concentration of Releases from the TRS Discharge

1. Limit releases via the TRS discharge to the on-site Absorption Pond to the concentrations specified in 10 CFR 20, Appendix B, Table 2, Column 2. For dissolved or entrained noble gases, limit the concentration to 2E-4 μCi/ml total activity.

2. With releases from the TRS exceeding the above limits, perform a dose projection due to liquid releases to UNRESTRICTED AREAS to determine if the limits of step 3.2.3c.1 have been exceeded. If the dose limits have been exceeded, follow the directions in step 3.2.3c.2, as applicable.

3. Sample and analyze radioactive liquid wastes according to the program in Attachment 3.6, Radioactive Liquid Waste Sampling and Analysis Program.

4. Use the results of radioactive analysis in accordance with the methods of this document to assure that all concentrations at the point of release are maintained within the limits stated above.

c. Dose

1. Limit the dose or dose commitment to an individual from radioactive material in liquid effluents released to unrestricted areas during any calendar quarter to ≤ 1.5 mrem/unit to the total body and to ≤ 5 mrem/unit to any organ, and during any calendar year to ≤ 3 mrem/unit to the total body and to ≤ 10 mrem/unit to any organ.

2. With the calculated release of radioactive materials in liquid effluents exceeding ten times any of the limits in Steps 3.2.3a or 3.2.3b, or exceeding 3.2.3c.1 above, prepare and submit a Written Report, pursuant to 10 CFR 20.2203, within 30 days after learning of the event. This report must describe the extent of exposure of individuals to radiation and radioactive material, including, as appropriate:

   a) Estimate of each individual's dose. This is to include the radiological impacts on finished drinking water supplies with regard to the requirements of 40 CFR 141, Safe Drinking Water Act (applicable due to Lake Township water treatment facility),
   b) Levels of radiation and concentration of radioactive material involved,
   c) Cause of elevated exposures, dose rates or concentrations,
   -AND-
   d) Corrective steps taken or planned to ensure against recurrence, including schedule for achieving conformance with applicable limits.

   These reports must be formatted in accordance with PMP-7030-001-002, Licensee Event Reports, Special and Routine Reports, even though this is not an LER.

3. Determine cumulative and projected dose contributions from liquid effluents in accordance with this document at least once per 31 days. Dose may be projected based on estimates from previous monthly projections and current or future plant conditions.

d. Liquid Radwaste Treatment System

1. Use the liquid radwaste treatment system to reduce the radioactive materials in liquid wastes prior to their discharge when the projected doses due to the liquid effluent from the site when averaged over 31 days, would exceed 0.06 mrem/unit to the total body or 0.2 mrem/unit to any organ.

2. Project doses due to liquid releases to UNRESTRICTED AREAS at least once per 31 days, in accordance with this document.

e. During times of primary to secondary leakage, the use of the startup flash tank should be minimized to reduce the release of curies from the secondary system and to maintain the dose to the public ALARA. Operation of the North Boric Acid Evaporator (NBAE) should be done in a manner so as to allow the recycle of the distillate water to the Primary Water Storage Tank for reuse. This will provide a large reduction in liquid curies of tritium released to the environment, as there is approximately 40 curies of tritium released with every monitor tank of NBAE distillate.

Drainage of high conductivity water (Component Cooling Water and ice melt water containing sodium tetraborate) shall be evaluated to decide whether it should be drained to waste (small volumes only), the Turbine Room Sump (low activity water only) or routed without demineralization processing to a monitor tank for release. This is necessary in order to minimize the detrimental affect that high conductivity water has on the radioactive wastewater demineralization system. The standard concentration and volume equation can be utilized to determine the impact on each method and is given here. The units for concentration and volume need to be consistent across the equation:

$$(C_i)(V_i) + (C_a)(V_a) = (C_t)(V_t)$$

Where;

C_i = the initial concentration of the system being added to
V_i = the initial volume of the system being added to
C_a = the concentration of the water that is being added to the system
V_a = the volume of the water that is being added to the system
C_t = the final concentration of the system after the addition
V_t = the final volume of the system after the addition

The intent is to keep the:

- WDS below 500 μmhos/cc.
- TRS below 1E-5 μC/cc.
- Monitor Tank release ALARA to members of the public.

Wastewater leakage into the liquid waste disposal system will be monitored routinely. In the event the leak rate is determined to be over two gallons per minute (the assumed plant design leakage based on the original 2 gpm waste evaporator), increased scrutiny will be placed on locating inleakage, timeliness of job order activities, and/or activities causing increased production of waste water.

BASES – CONCENTRATION

This specification is provided to ensure the concentration of radioactive materials released in liquid waste effluents from the site to unrestricted areas will be less than the concentration levels specified in 10 CFR Part 20, Appendix B, Table 2. This limitation provides additional assurance that the levels of radioactive materials in bodies of water outside the site will not result in exposures greater than 1) the Section II.A design objectives of Appendix I, 10 CFR Part 50, to an individual and 2) the limits of 10 CFR Part 20. The concentration limit for noble gasses is based upon the assumption that Xe-135 is the controlling radionuclide and its Effluent Concentration Unit in air (submersion) was converted to an equivalent concentration in water using the methods described in the International Commission on Radiological Protection (ICRP) Publication 2.

DOSE

This specification is provided to implement the requirements of Sections II.A, III.A, and IV.A of Appendix I, 10 CFR Part 50. The dose limits implement the guides set forth in Section II.A of Appendix I. The ACTION statements provide the required operating flexibility and at the same time, implement the guides set forth in Section IV.A of Appendix I to assure the releases of radioactive material in liquid effluents will be kept "as low as is reasonably achievable". Also, for fresh water sites with drinking water supplies which can be potentially affected by plant operations, there is reasonable assurance that the operation of the facility will not result in radionuclide concentrations in the finished drinking water that are in excess of the requirements of 40 CFR 141. The dose calculations in the ODCM implement the requirements in Section III.A of Appendix I that conformance with the guides of Appendix I be shown by calculational procedures based on models and data such that the actual exposure of an individual through appropriate pathways is unlikely to be substantially underestimated. The equations specified in the ODCM for calculating the doses due to the actual release rates of radioactive materials in liquid effluents, will be consistent with the methodology provided in Regulatory Guide 1.109, "Calculation of Annual Doses to Man from Routine Releases of Reactor Effluents for the Purpose of Evaluating Compliance with 10 CFR Part 50, Appendix I", Revision 1, October 1977, and Regulatory Guide 1.113, "Estimating Aquatic Dispersion of Effluents from Accidental and Routine Reactor Releases for the Purpose of Implementing Appendix I", April 1977. NUREG-0133 provides methods for dose calculations consistent with Regulatory Guide 1.109 and 1.113.

This specification applies to the release of liquid effluents from each reactor at the site. The liquid effluents from the shared system are proportioned among the units sharing the system.

LIQUID WASTE TREATMENT

The operability of the liquid radwaste treatment system ensures that this system will be available for use whenever liquid effluents require treatment prior to release to the environment. The requirements that the appropriate portions of this system be used when specified provide assurance that the releases of radioactive materials in liquid effluents will be kept "as low as is reasonably achievable". This specification implements the requirements of 10 CFR Part 50.36a, General Design Criteria Section 11.1 of the Final Safety Analysis Report for the Donald C. Cook Nuclear Plant, and design objective Section II.D of Appendix I to 10 CFR Part 50. The specified limits governing the use of appropriate portions of the liquid radwaste treatment system were specified as a suitable fraction of the dose design objectives set forth in Section II.A of Appendix I, 10 CFR Part 50, for liquid effluents.

3.2.4 Gaseous Effluents

a. Dose Rate

1. Limit the dose rate due to radioactive materials released in gaseous effluents from the site to ≤ 500 mrem/yr to the total body and ≤ 3000 mrem/yr to the skin for noble gases. Limit the dose rate due to all radioiodines and for all radioactive materials in particulate form and radionuclides (other than noble gases) with half-lives greater than eight days to ≤ 1500 mrem/yr to any organ.

2. With the dose rate(s) exceeding the above limits, without delay decrease the release rate to within the above limit(s).

3. Determine the dose rate due to noble gases in gaseous effluents to be within the above limits in accordance with the methods and procedures described in this document.

4. Determine the dose rate due to radioactive materials, other than noble gases, in gaseous effluents to be within the above limits in accordance with the methods and procedures of this document by obtaining representative samples and performing analyses in accordance with the sampling and analysis program in Attachment 3.7, Radioactive Gaseous Waste Sampling and Analysis Program.

b. Dose - Noble Gases

1. Limit the air dose in unrestricted areas due to noble gases released in gaseous effluents during any calendar quarter, to ≤ 5 mrad/unit for gamma radiation and ≤ 10 mrad/unit for beta radiation and during any calendar year, to ≤ 10 mrad/unit for gamma radiation and ≤ 20 mrad/unit for beta radiation.

2. With the calculated air dose from radioactive noble gases in gaseous effluents exceeding any of the above limits, prepare and submit a Written Report, pursuant to 10 CFR 20.2203 and addressed in step 3.2.3c.2, within 30 days after learning of the event.

3. Determine cumulative and projected dose contributions for the total time period in accordance with this document at least once every 31 days.

c. Dose – Iodine-131, Iodine-133, Tritium, and Radioactive Material in Particulate Form

1. Limit the dose to a MEMBER OF THE PUBLIC from radioiodine, radioactive materials in particulate form, and radionuclides other than noble gases with half-lives greater than eight days in gaseous effluents released to unrestricted areas (site boundary) to the following:

   a) During any calendar quarter to less than or equal to 7.5 mrem/unit to any organ

   b) During any calendar year to less than or equal to 15 mrem/unit to any organ.

2. With the calculated dose from the release of radioiodines, radioactive materials in particulate form, or radionuclides other than noble gases in gaseous effluents exceeding any of the above limits, prepare and submit a Written Report, pursuant to 10 CFR 20.2203 and addressed in step 3.2.3c.2, within 30 days after learning of the event.

3. Determine cumulative and projected dose contributions for the total time period in accordance with this document at least once every 31 days.

d. Gaseous Radwaste Treatment

1. Use the gaseous radwaste treatment system and the ventilation exhaust treatment system to reduce radioactive materials in gaseous wastes prior to their discharge when projected gaseous effluent air doses due to gaseous effluent releases to unrestricted areas when averaged over 31 days, would exceed 0.2 mrad/unit for gamma radiation and 0.4 mrad/unit for beta radiation. Use the ventilation exhaust treatment system to reduce radioactive materials in gaseous waste prior to their discharge when the projected doses due to gaseous effluent releases to unrestricted areas when averaged over 31 days would exceed 0.3 mrem/unit to any organ.

2. Project doses due to gaseous releases to UNRESTRICTED AREAS at least once per 31 days in accordance with this document.

BASES -- GASEOUS EFFLUENTS

This specification provides reasonable assurance that radioactive material discharged in gaseous effluents will not result in the exposure of a Member of the Public in an unrestricted area, either at or beyond the site boundary in excess of the design objectives of appendix I to 10 CFR 50. This specification is provided to ensure that gaseous effluents from all units on the site will be appropriately controlled. It provides operational flexibility for releasing gaseous effluents to satisfy the Section II.A and II.C design objectives of appendix I to 10 CFR 50. For individuals who may at times be within the site boundary, the occupancy of the individual will be sufficiently low to compensate for any increase in the atmospheric diffusion factor above that for the site boundary. The specified instantaneous release rate limits restrict, at all times, the corresponding gamma and beta dose rates above background to an individual at or beyond the site boundary to ≤ 500 mrem/yr to the total body or to ≤ 3000 mrem/yr to the skin. These instantaneous release rate limits also restrict, at all times, the corresponding thyroid dose rate above background to a child via the inhalation pathway to ≤ 1500 mrem/yr. Limitations on the dose rate resulting from radioactive material released in gaseous effluents to areas beyond the site boundary conforming to the doses associated with 10 CFR 20, Appendix B, Table 2, Column 1.

This specification applies to the release of gaseous effluents from all reactors at the site. The gaseous effluents from the shared system are proportioned among the units sharing that system.

DOSE, NOBLE GASES

This specification is provided to implement the requirements of Sections II.B, III.A, and IV.A of Appendix I, 10 CFR Part 50. The dose limits implement the guides set forth in Section II.B of Appendix I.

The ACTION statements provide the required operating flexibility and at the same time implement the guides set forth in section IV.A of Appendix I to assure that the releases of radioactive material in gaseous effluents will be kept "as low as is reasonably achievable". The Surveillance Requirements implement the requirements in Section III.A of Appendix I that conform with the guides of Appendix I to be shown by calculational procedures based on models and data such that the actual exposure of an individual through the appropriate pathways is unlikely to be substantially underestimated. The dose calculations established in the ODCM for calculating the doses due to the actual release rates of radioactive noble gases in gaseous effluents will be consistent with the methodology provided in Regulatory Guide 1.109, "Calculation of Annual Doses to Man from Routine Releases of Reactor Effluents for the Purpose of Evaluating Compliance with 10 CFR Part 50, Appendix I", Revision 1, October 1977 and Regulatory Guide 1.111, "Methods for Estimating Atmospheric Transport and Dispersion of Gaseous Effluents in Routine Releases from Light-Water-Cooled Reactors", Revision 1, July 1977. The ODCM equations provided for determining the air doses at the site boundary will be based upon the historical average atmospherical conditions. NUREG-0133 provides methods for dose calculations consistent with Regulatory Guides 1.109 and 1.111.

DOSE, RADIOIODINES, RADIOACTIVE MATERIAL IN PARTICULATE FORM, AND RADIONUCLIDES OTHER THAN NOBLE GASES

This specification is provided to implement the requirements of Sections II.C, III.A, and IV.A of Appendix I, 10 CFR Part 50. The dose limits are the guides set forth in Section II.C of Appendix I.

The ACTION statements provide the required operating flexibility and at the same time implement the guides set forth in section IV.A of Appendix I to assure that the releases of radioactive material in gaseous effluents will be kept "as low as is reasonably achievable". The ODCM calculational methods specified in the surveillance requirements implement the requirements in Section III.A of Appendix I that conform with the guides of Appendix I to be shown by calculational procedures based on models and data such that the actual exposure of an individual through the appropriate pathways is unlikely to be substantially underestimated. The ODCM calculational methods approved by the NRC for calculating the doses due to the actual release rates of the subject materials are required to be consistent with the methodology provided in Regulatory Guide 1.109, "Calculation of Annual Doses to Man from Routine Releases of Reactor Effluents for the Purpose of Evaluating Compliance with 10 CFR Part 50, Appendix I", Revision 1, October 1977 and Regulatory Guide 1.111, "Methods for Estimating Atmospheric Transport and Dispersion of Gaseous Effluents in Routine Releases from Light-Water-Cooled Reactors", Revision 1, July 1977. These equations also provide the methodology for determining the actual doses based upon the historical average atmospheric conditions. The release rate specifications for radioiodines, radioactive material in particulate form, and radionuclides, other than noble gases, are dependent on the existing radionuclide pathways to man, in the unrestricted area. The pathways which are examined in the development of these calculations are: 1) individual inhalation of airborne radionuclides, 2) deposition of radionuclides onto green leafy vegetation with subsequent consumption by man, 3) deposition onto grassy areas where milk animals and meat producing animals graze with consumption of the milk and meat by man, and 4) deposition on the ground with subsequent exposure of man.

GASEOUS WASTE TREATMENT

The operability of the gaseous radwaste treatment system and the ventilation exhaust treatment systems ensures that the systems will be available for use whenever gaseous effluents require treatment prior to release to the environment. The requirement that the appropriate portions of these systems be used when specified provides reasonable assurance that the releases of radioactive materials in gaseous effluents will be kept "as low as is reasonably achievable". This specification implements the requirements of 10 CFR Part 50.36a, General Design Criterion Section 11.1 of the Final Safety Analysis Report for the Donald C. Cook Nuclear Plant, and design objective Section II.D of Appendix I to 10 CFR Part 50. The specified limits governing the use of appropriate portions of the systems were specified as a suitable fraction of the guides forth in Sections II.B and II.C of Appendix I, 10 CFR Part 50, for gaseous effluents.

3.2.5 Radioactive Effluents - Total Dose

a. The dose or dose commitment to a real individual from all uranium fuel cycle sources is limited to ≤ 25 mrem to the total body or any organ (except the thyroid, which is limited to ≤ 75 mrem) over a period of 12 consecutive months.

b. With the calculated doses from the release of radioactive materials in liquid or gaseous effluents exceeding twice the limits of steps 3.2.3c (Dose), 3.2.4b (Dose - Noble Gases), or 3.2.4c (Dose – Iodine-131, Iodine-133, Tritium, and Radioactive Material in Particulate Form) during any calendar quarter, perform the following:

- Investigate and identify the causes for such release rates;
- Define and initiate a program for corrective action;
- Report these actions to the NRC within 30 days from the end of the quarter during which the release occurred.

IF the estimated dose(s) exceeds the limits above, and **IF** the release condition resulting in violation has not already been corrected prior to violation of 40 CFR 190, **THEN** include in the report a request for a variance in accordance with the provisions of 40 CFR 190 and including the specified information of paragraph 190.11(b). Submittal of the report is considered a timely request, and a variance is granted until staff action on the request is complete. The variance only relates to the limits of 40 CFR 190, and does not apply in any way to the requirements for dose limitation of 10 CFR 50, as addressed in other sections of this document.

c. Determine cumulative dose contributions from liquid and gaseous effluents in accordance with this document (including steps 3.2.3c [Dose], 3.2.4b [Dose - Noble Gases], or 3.2.4c [Dose – Iodine-131, Iodine-133, Tritium, and Radioactive Material in Particulate Form]).

BASES -- TOTAL DOSE

This specification is provided to meet the dose limitations of 40 CFR 190. The specification requires the preparation and submittal of a Special Report whenever the calculated doses from plant radioactive effluents exceed twice the design objective doses of Appendix I. For sites containing up to 4 reactors, it is highly unlikely that the resultant dose to a member of the public will exceed the dose limits of 40 CFR 190 if the individual reactors remain within the reporting requirement level. The Special Report will describe a course of action, which should result in the limitations of dose to a member of the public for 12 consecutive months to within the 40 CFR 190 limits. For the purposes of the Special Report, it may be assumed that the dose commitment to any member of the public from other uranium fuel cycle sources is negligible with the exception that dose contributions from other nuclear fuel cycle facilities at the same site or within a radius of 5 miles must be considered. If the dose to any member of the public is estimated to exceed the requirements of 40 CFR 190, the Special Report with a request for a variance (provided the release conditions resulting in violation of 40 CFR 190 have not already been corrected, in accordance with the provision of 40 CFR 190.11), is considered to be a timely request and fulfills the requirements of 40 CFR 190 until NRC staff action is completed. An individual is not considered a member of the public during any period in which he/she is engaged in carrying out any operation, which is part of the nuclear fuel cycle.

3.3 Calculation of Alarm/Trip Setpoints

The alarm and trip setpoints are to provide monitoring, indication, and control of liquid and gaseous effluents. The setpoints are used in conjunction with sampling programs to assure that the releases are kept within the limits of 10 CFR 20, Appendix B, Table 2. Establish setpoints for liquid and gaseous monitors. Depending on the monitor function, it would be a continuous or batch monitor. The different types of monitors are subject to different setpoint methodologies.

One variable used in setpoint calculations is the multiple release point (MRP) factor. The MRP is a factor used such that when all the releases are integrated, the applicable LIMIT value will not be exceeded. The MRP is determined such that the sum of the MRP's for that effluent type (liquid or gaseous) is less than or equal to 1. The value of the MRP is arbitrary, and it should be assigned based on operational performance. The values of the MRP's for each liquid release point are given in Attachment 3.8, Multiple Release Point Factors for Release Points.

The Site stance on instrument uncertainty is taken from HPPOS-223, Consideration of Measurement Uncertainty When Measuring Radiation Levels Approaching Regulatory Limits, which states the NRC position is the result of a valid measurement obtained by a method, which provides a reasonable demonstration of compliance. This value should be accepted and the uncertainty in that measured value need not be considered.

3.3.1 Liquid Monitors

Establish liquid monitor setpoints for each monitor of the liquid effluent release systems. A schematic of the liquid effluent release systems is shown as Attachment 3.9, Liquid Effluent Release Systems. A list of the Plant Liquid Effluent Parameters is in Attachment 3.10, Plant Liquid Effluent Parameters. The details of each system design and operation can be found in the system descriptions. The setpoints are intended to keep releases within the limits of 10 CFR 20, Appendix B, Table 2, Column 2. Determine setpoints using either the batch or the continuous methodology.

a. Liquid Batch Monitor Setpoint Methodology

1. There is only one monitor used on the Waste Disposal System for liquid batch releases. This monitor is identified as RRS-1000. Steam Generator Blowdown radiation monitors also can be used to monitor batch releases while draining steam generators. The function of these monitors is to act as a check on the sampling program. The sampling program determines the nuclides and concentrations of those nuclides prior to release. The discharge and dilution flow rates are then adjusted to keep the release within the limits of 10 CFR 20. Based on the concentrations of nuclides in the release, the count rate on the monitor can be predicted. The high alarm setpoint can then be set above the predicted value up to the maximum setpoint of the system.

2. The radioactive concentration of each batch of radioactive liquid waste to be discharged is determined prior to each release by sampling and analysis in accordance with Attachment 3.6, Radioactive Liquid Waste Sampling and Analysis Program.

3. The allowable release flow rates are determined in order to keep the release concentrations within the requirements of 10 CFR 20, Appendix B, Table 2, Column 2. The equation to calculate the flow rate is from Addendum AA1 of NUREG-0133:

$$\left[\Sigma \frac{C_i}{LIMIT_i}\right] * \frac{f}{MRP} \leq F + f$$

Where;

C_i = the concentration of nuclide "i" in μCi/ml

$LIMIT_i$ = the 10 CFR 20, Appendix B, Table 2, Column 2 limit of nuclide "i" in μCi/ml

f = the effluent flow rate in gpm (Attachment 3.10, Plant Liquid Effluent Parameters)

F = the dilution water flow rate as estimated prior to release. The dilution flow rate is a multiple of 230,000 gpm depending on the number of circulation pumps in operation.

MRP = the multiple release point factor. A factor such that when all the release points are operating at one time the limits of 10 CFR 20 will not be exceeded.

4. This equation must be true during the batch release. Before the release is started, substitute the maximum effluent flow rate and the minimum dilution flow rate for f and F, respectively. If the equation is true, the release can proceed with those flow rates as the limits of operation. If the equation is not true, the effluent flow rate can be reduced or the dilution flow rate can be increased to make the equation true. This equation may be rearranged to solve for the maximum effluent release flow rate (f).

5. The setpoint is used as a quality check on the sampling program. The setpoint is used to stop the effluent flow when the monitor reading is greater than the predicted value from the sampling program. The predicted value is generated by converting the effluent concentration for each gamma emitting radionuclide to counts per unit of time as per Attachment 3.11, Volumetric Detection Efficiencies for Principle Gamma Emitting Radionuclides for Eberline Liquid Monitors, or Attachment 3.12, Counting Efficiency Curves for R-19, and R-24. The sum of all the counts per unit of time is the predicted count rate. The predicted count rate can then be multiplied by a factor to determine the high alarm setpoint that will provide a high degree of conservatism and eliminate spurious alarms.

b. Liquid Continuous Monitor Setpoint Methodology

1. There are eight monitors used as potential continuous liquid release monitors. These monitors are used in the steam generator blowdown (SGBD), blowdown treatment (BDT), and essential service water (ESW) systems.

2. These Westinghouse monitors (R) are being replaced by Eberline monitors (DRS) and are identified as:

   - R-19 or DRS 3100/4100 for SGBD
   - R-24 or DRS 3200/4200 for BDT

   The function of these monitors is to assure that releases are kept within the concentration limits of 10 CFR 20, Appendix B, Table 2, Column 2, entering the unrestricted area following dilution.

3. The monitors on steam generator blowdown and blowdown treatment systems have trip functions associated with their setpoints. Essential service water monitors are equipped with an alarm function only and monitor effluent in the event the Containment Spray Heat Exchangers are used.

4. The equation used to determine the setpoint for continuous monitors is from Addendum AA1 of NUREG-0133:

$$S_p \leq \frac{C * Eff * MRP * F * SF}{f}$$

Where;

S_p = setpoint of monitor (cpm)

C = 5E-7 μCi/ml, maximum effluent control limit from 10 CFR 20, Appendix B, Table 2, Column 2 of a known possible nuclide in effluent stream. (The limiting nuclide shall be evaluated annually by reviewing current nuclides against historical ones in order to determine if one with a more restrictive effluent concentration limit than Sr90 is found. The concentration limit shall be adjusted appropriately.)
-OR-
if a mixture is to be specified,

$$\frac{\Sigma C_i}{\Sigma \frac{C_i}{LIMIT_i}}$$

Eff = Efficiency, this information is located in Attachment 3.11, Volumetric Detection Efficiencies for Principle Gamma Emitting Radionuclides for Eberline Liquid Monitors, through Attachment 3.13, Counting Efficiency Curve for R-20, and R-28, for the specific monitors. For Eberline monitors the efficiency is nuclide specific and the calculation changes slightly to:

$$\frac{\Sigma(C_i * Eff_i)}{\Sigma \frac{C_i}{LIMIT_i}} \; replaces \; C * Eff$$

MRP = multiple release point factor. A factor such that when all the release points are operating at one time the limits of 10 CFR 20 will not be exceeded (Attachment 3.8, Multiple Release Point Factors for Release Points). The MRP for ESW monitors is set to 1.

F = dilution water (circ water) flow rate in gpm obtained from Attachment 3.10, Plant Liquid Effluent Parameters. For routine operation, the setpoint should be calculated using the minimum dilution flow rate of 230,000 gpm.

SF = Safety Factor, 0.9.

f = applicable effluent release flow rate in gpm. For routine operation, the setpoint should be calculated using maximum effluent flow rate (Attachment 3.10, Plant Liquid Effluent Parameters).

3.3.2 Gaseous Monitors

For the purpose of implementing Step 3.2.2, Radioactive Gaseous Effluent Monitoring Instrumentation, and Substep 3.2.4a, Dose Rate, the alarm setpoints for gaseous effluents released into unrestricted areas will be established using the following methodology. In addition, the above steps do not apply to instantaneous alarm and trip setpoints for integrating radiation monitors sampling radioiodines, radioactive materials in particulate form and radionuclides other than noble gases. A schematic of the gaseous effluent release systems is presented in Attachment 3.14, Gaseous Effluent Release Systems. Attachment 3.15, Plant Gaseous Effluent Parameters, presents the effluent flow rate parameter(s).

Gaseous effluent monitor high alarm setpoints will routinely be established at a fraction of the maximum allowable setpoint (typically 10% of the setpoint) for ALARA purposes. Alert alarms will normally be set to provide adequate indications of small changes in radiological conditions.

NOTE: **IF** the setpoint calculation methodology changes or the associated factors change for Unit Vent, Air Ejector and/or Gland Seal monitors, **THEN** initiate a review by Emergency Planning to ensure that the requirements of 10 CFR 50.54 (q) are maintained.

a. Plant Unit Vent

1. The gaseous effluents discharged from the plant vent will be monitored by the plant vent radiation monitor low range noble gas channel [Tag No. VRS-1505 (Unit 1), VRS-2505 (Unit 2)] to assure that applicable alarms and trip actions (isolation of gaseous release) will occur prior to exceeding the limits in step 3.2.4, Gaseous Effluents. The alarm setpoint values will be established using the following unit analysis equation:

$$S_p = \frac{SF * MRP * DL_j}{F_p * \overline{\chi/Q} * \sum_i (W_i * DCF_{ij})}$$

Where;

S_p = the maximum setpoint of the monitor in μCi/cc for release point p, based on the most limiting organ

SF = an administrative operation safety factor, less than 1.0

MRP = a weighted multiple release point factor (≤ 1.0), such that when all site gaseous releases are integrated, the applicable dose will not be exceeded based on the release rate of each effluent point. The MRP is an arbitrary value based on the ratio of the release rate or the volumetric flow rate of each effluent point to the total respective flow rate value of the plant and will be consistent with past operational experience. The MRP is computed as follows:

- Compute the average release rate, Q_p, (or the volumetric flow rate, f_p) from each release point p.
- Compute ΣQp (or Σfp) for all release points.
- Ratio Qp/ΣQp (or fp/Σfp) for each release point. This ratio is the MRP for that specific release point
- Repeat the above bullets for each of the site's eight gaseous release points.

F_p = the maximum volumetric flow rate of release point "p", at the time of the release, in cc/sec. The maximum Unit Vent flow rate, by design, is 186,600 cfm for Unit 1 and 143,400 cfm for Unit 2.

DL_j = dose rate limit to organ "j" in an unrestricted area (mrem/yr).

Based on continuous releases, the dose rate limits, DL_j, from step 3.2.4a, Dose Rate, are as follows:

- Total Body ≤ 500 mrem/year
- Skin ≤ 3000 mrem/year
- Any Organ ≤ 1500 mrem/year

$\overline{\chi / Q}$ = The worst case annual average relative concentration in the applicable sector or area, in sec/m^3 (see Attachment 3.16, 10 Year Average of 1995-2004 Data).

W_i = weighted factor for the radionuclide:

$$W_i = \frac{C_i}{\Sigma C_k}$$

Where,

C_i = concentration of the most abundant radionuclide "i"

C_k = total concentration of all identified radionuclides in that release pathway. For batch releases, this value may be set to 1 for conservatism.

DCF_{ij} = dose conversion factor used to relate radiation dose to organ "j", from exposure to radionuclide "i" in mrem m^3 / yr μCi. See following equations.

The dose conversion factor, DCF_{ij}, is dependent upon the organ of concern.

For the whole body: $DCF_{ij} = K_i$

Where;

K_i = whole body dose factor due to gamma emissions for each identified noble gas radionuclide in mrem m^3 / yr μCi. See Attachment 3.18, Dose Factors.

For the skin: $DCF_{ij} = L_i + 1.1M_i$

Where;

L_i = skin dose factor due to beta emissions for each identified noble gas radionuclide, in mrem m^3 / yr μCi. See Attachment 3.18, Dose Factors.

1.1 = the ratio of tissue to air absorption coefficient over the energy range of photons of interest. This ratio converts absorbed dose (mrad) to dose equivalent (mrem).

M_i = the air dose factor due to gamma emissions for each identified noble gas radionuclide in mrad m^3 / yr μCi. See Attachment 3.18, Dose Factors.

For the thyroid, via inhalation: $DCF_{ij} = P_i$

Where;

P_i = the dose parameter, for radionuclides other than noble gas, for the inhalation pathway in mrem m^3 / yr μCi (and the food and ground path, as appropriate). See Attachment 3.18, Dose Factors.

2. The plant vent radiation monitor low range noble gas high alarm channel setpoint, S_p, will be set such that the dose rate in unrestricted areas to the whole body, skin and thyroid (or any other organ), whichever is most limiting, will be less than or equal to 500 mrem/yr, 3000 mrem/yr, and 1500 mrem/yr respectively.

3. The thyroid dose is limited to the inhalation pathway only.

4. The plant vent radiation monitor low range noble gas setpoint, S_p, will be recomputed whenever gaseous releases like Containment Purge, Gas Decay Tanks and CVCS HUTs are discharged through the plant vent to determine the most limiting organ.

5. The high alarm setpoint, S_p, may be established at a lower value than the lowest computed value via the setpoint equation.

6. Containment Pressure Reliefs will not have a recomputed high alarm setpoint, but will use the normal high alarm setpoint due to their randomness and the time constraints involved in recomputation.

7. At certain times, it may be desirable to increase the high alarm setpoint, if the vent flow rate is decreased. This may be accomplished in one of two ways.

$$\frac{\text{Max } Conc\ (\mu Ci/cc) * \text{Max } Flowrate\ (cfm)}{New \text{ Max } Concentration\ (\mu Ci/cc)} = New \text{ Max } cfm$$

-OR-

$$\frac{\text{Max } Conc\ (\mu Ci/cc) * \text{Max } Flowrate\ (cfm)}{New \text{ Max } Flowrate\ (cfm)} = New \text{ Max } \mu Ci/cc$$

b. Waste Gas Storage Tanks

1. The gaseous effluents discharged from the Waste Gas System are monitored by the vent stack monitors VRS-1505 and VRS-2505.

2. In the event of a high radiation alarm, an automatic termination of the release from the waste gas system will be initiated from the plant vent radiation monitor low range noble gas channel (VRS-1505 or VRS-2505). Therefore, for any gaseous release configuration, which includes normal operation and waste gas system gaseous discharges, the alarm setpoint of the plant vent radiation monitor will be recomputed to determine the most limiting organ based on all gaseous effluent source terms.

   Chemical and Volume Control System Hold Up Tanks (CVCS HUT), containing high gaseous oxygen concentrations, may be released under the guidance of waste gas storage tank utilizing approved Operations' procedures.

3. It is normally prudent to allow 45 days of decay prior to releasing a Gas Decay Tank (GDT). There are extenuating, operational circumstances that may prevent this from occurring. Under these circumstances, such as high oxygen concentration creating a combustible atmosphere, it is prudent to waive the 45-day decay for safety's sake.

c. Containment Purge and Exhaust System

1. The gaseous effluents discharged by the Containment Purge and Exhaust Systems and Instrumentation Room Purge and Exhaust System are monitored by the plant vent radiation monitor noble gas channels (VRS-1505 for Unit 1, VRS-2505 for Unit 2); and alarms and trip actions will occur prior to exceeding the limits in step 3.2.4a, Dose Rate.

2. For the Containment System, a continuous air sample from the containment atmosphere is drawn through a closed, sealed system to the radiation monitors (Tag No. ERS-1300/1400 for Unit 1 and ERS-2300/2400 for Unit 2). During purges, these monitor setpoints will give a Purge and Exhaust Isolation signal upon actuation of high alarm setpoints for particulate and noble gas channels. The sample is then returned to containment. Grab sample analysis is performed for a Containment purge before release.

3. The Upper Containment area is monitored by normal range area gamma monitors (Tag No. VRS-1101/1201 for Unit 1 and VRS-2101/2201 for Unit 2), which also give Purge and Exhaust Isolation Trip signals upon actuation of their high alarm.

4. For the Containment Pressure Relief System, no sample is routinely taken prior to release, but a sample is obtained twice per month.

5. The containment airborne and area monitors, upon actuation of their high alarm, will automatically initiate closure of the Containment and Instrument Room purge supply and exhaust duct valves and containment pressure relief system valves. Complete trip of all isolation control devices requires high alarm of one of the two Train A monitors (ERS-1300/2300 or VRS-1101/2101) and one of the two Train B monitors (ERS-1400/2400 or VRS-1201/2201).

d. Steam Jet Air Ejector System (SJAE)

1. The gaseous effluents from the Steam Jet Air Ejector System discharged to the environment are continuously monitored by radiation monitor (Tag No. SRA-1900 for Unit 1 and SRA-2900 for Unit 2). The monitor will alarm prior to exceeding the limits of step 3.2.4a, Dose Rate. The alarm setpoint for the Condenser Air Ejector System monitor will be based on the maximum air ejector exhaust flow rate, (Attachment 3.15, Plant Gaseous Effluent Parameters). The alarm setpoint value will be established using the following unit analysis equation:

$$S_{SJAE} = \frac{SF * MRP * DL_j}{F_p * \chi/Q * \sum (W_i * DCF_{ij})}$$

Where;

S_{SJAE} = the maximum setpoint, based on the most limiting organ, in μCi/cc and where the other terms are as previously defined

e. Gland Seal Condenser Exhaust

1. The gaseous effluents from the Gland Seal Condenser Exhaust discharged to the environment are continuously monitored by radiation monitor (Tag No. SRA-1800 for Unit 1 and SRA-2800 for Unit 2). The radiation monitor will alarm prior to exceeding the limits of step 3.2.4a, Dose Rate. The alarm setpoint for the GSCE monitor will be based on the maximum condenser exhaust flow rate (1260 CFM for Unit 1, 2754 CFM each for the two Unit 2 vents). The alarm setpoint value will be established using the following unit analysis equation:

$$S_{GSCE} = \frac{SF * MRP * DL_j}{F_p * \overline{\chi/Q} * \sum_i (W_i * DCF_{ij})}$$

Where;

S_{GSCE} = the maximum setpoint, based on the most limiting organ, in μCi/cc and where the other terms are as previously defined

3.4 Radioactive Effluents Total Dose

3.4.1 The cumulative dose contributions from liquid and gaseous effluents will be determined by summing the cumulative doses as derived in steps 3.2.3c (Dose), 3.2.4b (Dose - Noble Gases), and 3.2.4c (Dose – Iodine-131, Iodine-133, Tritium, and Radioactive Material in Particulate Form) of this procedure. Dose contribution from direct radiation exposure will be based on the results of the direct radiation monitoring devices located at the REMP monitoring stations. See NUREG-0133, section 3.8.

3.5 Radiological Environmental Monitoring Program (REMP)

3.5.1 Purpose of the REMP

a. The purpose of the REMP is to:

- Establish baseline radiation and radioactivity concentrations in the environs prior to reactor operations,
- Monitor critical environmental exposure pathways,
- Determine the radiological impact, if any, caused by the operation of the Donald C. Cook Nuclear Plant upon the local environment.

b. The first purpose of the REMP was completed prior to the initial operation of either of the two nuclear units at the Donald C. Cook Nuclear Plant Site. The second and third purposes of the REMP are an on-going operation and as such various environmental media and exposure pathways are examined. The various pathways and sample media used are delineated in Attachment 3.19, Radiological Environmental Monitoring Program Sample Stations, Sample Types, Sample Frequencies. Included is a list of the sample media, analysis required, sample stations, and frequency requirements for both collection and analysis. Attachment 3.19, Radiological Environmental Monitoring Program Sample Stations, Sample Types, Sample Frequencies, defines the scope of the REMP for the Donald C. Cook Nuclear Plant.

3.5.2 Conduct of the REMP [Ref. 5.2.1u]

a. Conduct sample collection and analysis for the REMP in accordance with Attachment 3.19, Radiological Environmental Monitoring Program Sample Stations, Sample Types, Sample Frequencies, Attachment 3.20, Maximum Values for Lower Limits of DetectionsA,B - REMP, and Attachment 3.21, Reporting Levels for Radioactivity Concentrations in Environmental Samples. These are applicable at all times. The on-site monitoring locations are shown on Attachment 3.22, On-Site Monitoring Location - REMP, and the off-site monitoring locations are shown on Attachment 3.23, Off-Site Monitoring Locations - REMP.

1. Perform each surveillance requirement within the specified time interval in Attachment 3.19, Radiological Environmental Monitoring Program Sample Stations, Sample Types, Sample Frequencies, with a maximum allowable extension not to exceed 25% of the surveillance interval.

2. If an environmental sample cannot be collected in accordance with step 3.5.2a, submit a description of the reasons for deviation and the actions taken to prevent a reoccurrence as part of the Annual Radiological Environmental Operating Report (AREOR).

3. Deviations from the required sampling schedule are permitted if specimens are unobtainable due to hazardous conditions, seasonal unavailability, or malfunction of automatic sampling equipment. If the deviation from the required sampling schedule is due to the malfunction of automatic sampling equipment, make every effort to complete the corrective action prior to the end of the next sampling period.

NOTE: **Only** one report per event is required.

NOTE: Radioactivity from sources other than plant effluents do not require a Special Report.

4. **IF** any of the following conditions are identified:

   - A radionuclide associated with plant effluents is detected in any REMP sample medium AND its concentration exceeded the limits specified in Attachment 3.21, Reporting Levels for Radioactivity Concentrations in Environmental Samples,
   - More than one radionuclide associated with plant effluents is detected in any REMP sample medium AND the Total Fractional Level, when averaged over the calendar quarter, is greater than or equal to 1.

   THEN complete the following steps, as applicable:

   - Submit a Special Report to the Nuclear Regulatory Commission within 30 days.
   - Submit a Special Report to designated state and local organizations for groundwater or surface water media which could be used as drinking water.
   - Evaluate the following items for inclusion in Special Reports:

     1) Release conditions
     2) Environmental factors
     3) Corrective actions
     4) Additional factors which may have contributed to the identified levels

5. **WHEN** submission of a Special Report to designated state and local organizations is required, **THEN** perform the following:

   - Communicate event specific information to designated state and local organization personnel by the end of the next business day.

6. **IF** a currently sampled milk farm location becomes unavailable, **THEN** conduct a special milk farm survey within 15 days.

   a) **IF** the unavailable location was an indicator farm, **THEN** an alternate sample location may be established within eight miles of the Donald C. Cook Nuclear Plant, if one is available.

   b) **IF** the unavailable location was a background farm, **THEN** an alternate sample location may be established greater than 15 but less than 25 miles of the Donald C. Cook Nuclear Plant in one of the less prevalent wind direction sectors, if one is available.

   c) **IF** a replacement farm is unobtainable and the total number of indicator farms is less than three or the background farms is less than one, **THEN** perform monthly vegetation sampling in lieu of milk sampling.

BASES - RADIOLOGICAL ENVIRONMENTAL MONITORING PROGRAM (REMP)

The REMP provides measurements of radiation and radioactive materials in those exposure pathways and for those radionuclides, which lead to the highest potential radiation exposures of individuals resulting from the station operation. Thereby, this monitoring program supplements the radiological effluent monitoring program by verifying the measurable concentration of radioactive materials and levels of radiation are not higher than expected on the basis of the effluent measurements and modeling of the environmental exposure pathways. The initially specified REMP was effective for the first three years of commercial operation. Program changes may be initiated based on operational experience in accordance with the requirements of Technical Specification 5.5.1.c.

The detection capabilities, required by Attachment 3.20, Maximum Values for Lower Limits of DetectionsA,B - REMP, are the state-of-the-art for routine environmental measurements in industrial laboratories.

It should be recognized that the LLD is defined as a priori (before the fact) limit representing the capability of a measurement system and not as a posteriori (after the fact) limit for a particular measurement. Analyses shall be performed in such a manner that the stated LLDs will be achieved under routine analysis conditions. Occasionally, background fluctuations, unavoidably small sample sizes, the presence of interfering nuclides, or other uncontrollable circumstances may render these LLDs unachievable. In such cases, the contributing factors will be identified and described in the Annual Radiological Environmental Operating Report.

3.5.3 Annual Land Use Census [Ref. 5.2.1u]

a. Conduct a land use census and identify the location of the nearest milk animal, the nearest residence and the nearest garden of greater than 500 square feet producing fresh leafy vegetables in each of the ten land sectors within a distance of five miles.

b. In lieu of the garden census, grape and broad leaf vegetation sampling may be performed as close to the site boundary as possible in a land sector, containing sample media, with the highest average deposition factor (D/Q) value.

c. Conduct this land use census annually between the dates of June 1 and October 1 by door-to-door survey, aerial survey, or by consulting local agricultural authorities.

1. With a land use census identifying a location(s), which yields a calculated dose or dose commitment greater than the values currently being calculated in this document, make appropriate changes to incorporate the new location(s) within 30 days, if possible.

BASES -- LAND USE CENSUS

This is provided to ensure changes in the use of unrestricted areas are identified and modifications to the monitoring program are made in accordance with requirements of TS 6.8.4b, if required by the results of the census. This census satisfies the requirements of Section IV.B.3 of Appendix I to 10 CFR Part 50. Restricting the census to gardens of greater than 500 square feet provides assurance that significant exposure pathways via leafy vegetables will be identified and monitored since a garden of this size is the minimum required to produce the quantity (25 kg/yr) of leafy vegetables assumed in Regulatory Guide 1.109 for consumption of a child. To determine this minimum garden size, the following assumptions were used: 1) that 20% of the garden was used for growing broad leaf vegetation (that is, similar to lettuce and cabbage), and 2) a vegetation field of 2 kg/square meter.

3.5.4 Interlaboratory Comparison Program

a. In order to comply with Reg. Guides 4.1 and 4.15, the analytical vendor participates in an Interlaboratory Comparison Program, for radioactive materials. Address program results and identified deficiencies in the AREOR.

1. With analyses not being performed as required above, report the corrective actions taken to prevent a recurrence to the Commission in the AREOR.

BASES -- INTERLABORATORY COMPARISON PROGRAM

The requirement for participation in an Interlaboratory Comparison Program is provided to ensure independent checks on the precision and accuracy of the measurements of radioactive material in environmental sample matrices are performed as part of the quality assurance program for environmental monitoring in order to demonstrate the results are reasonably valid.

3.6 Radioactive Equipment Storage Facility (Mausoleum) Groundwater Monitoring Program

3.6.1 Purpose of the Radioactive Equipment Storage Facility (Mausoleum) Groundwater Radiological Monitoring Program

a. The purpose of the temporary on-site Radioactive Equipment Storage Facility (Mausoleum) Radiological Monitoring Program was to establish baseline radiological data for the groundwater surrounding the facility prior to the storage of the Unit 2 Steam Generator Lower Assemblies. Thereafter, the purpose is to monitor the groundwater through observation wells with locations as shown in Attachment 3.22, On-Site Monitoring Location - REMP, to determine the radiological impact, if any, caused by the use of the Storage Facility.

3.6.2 Conduct of the Radioactive Equipment Storage Facility (Mausoleum) Groundwater Radiological Monitoring Program

a. Collect and analyze groundwater samples in accordance with Attachment 3.19, Radiological Environmental Monitoring Program Sample Stations, Sample Types, Sample Frequencies. Apply the values from Attachment 3.20, Maximum Values for Lower Limits of DetectionsA,B - REMP, (excluding I-131) and Attachment 3.21, Reporting Levels for Radioactivity Concentrations in Environmental Samples, (excluding I-131).

3.7 Meteorological Model

3.7.1 Three towers are used to determine the meteorological conditions at Donald C. Cook Nuclear Plant. One of the towers is located at the Lake Michigan shoreline to determine the meteorological parameters associated with unmodified shoreline air. The data is accumulated by microprocessors at the tower sites and normally transferred to the central computer every 15 minutes.

3.7.2 The central computer uses a meteorological software program to provide atmospheric dispersion and deposition parameters. The meteorological model used is based on guidance provided in Reg. Guide 1.111 for routine releases. All calculations use the Gaussian plume model.

3.8 Reporting Requirements

3.8.1 Annual Radiological Environmental Operating Report (AREOR)

a. Submit routine radiological environmental operating reports covering the operation of the units during the previous calendar year prior to May 15 of each year. [Ref 5.2.1j, TS 5.6.2]

b. Include in the AREOR:

- Summaries, interpretations, and statistical evaluation of the results of the radiological environmental surveillance activities for the reporting period.

- A comparison with pre-operational studies, operational controls (as appropriate), and previous environmental surveillance reports and an assessment of the observed impacts of the plant operation on the environment.

- The results of the land use censuses required by step 3.5.3, Annual Land Use Census.

- If harmful effects or evidence of irreversible damage are detected by the monitoring, provide in the report an analysis of the problem and a planned course of action to alleviate the problem.

- Summarized and tabulated results of all radiological environmental samples taken during the reporting period. In the event that some results are not available for inclusion with the report, submit the report noting and explaining the reasons for the missing results. Submit the missing data as soon as possible in a supplementary report.

- A summary description of the REMP including sampling methods for each sample type, size and physical characteristics of each sample type, sample preparation methods, analytical methods, and measuring equipment used.

- A map of all sample locations keyed to a table giving distances and directions from one reactor.

- The results of participation in the Interlaboratory Comparison Program required by step 3.5.4, Interlaboratory Comparison Program.

3.8.2 Annual Radiological Effluent Release Report (ARERR)

a. Submit routine ARERR covering the operation of the unit during the previous 12 months of operation within 90 days after January 1 of each year. [Ref 5.2.1j, TS 5.6.3]

b. Include in the ARERR a summary of the quantities of radioactive liquid and gaseous effluents and solid waste released from the units as outlined in Reg. Guide 1.21, "Measuring, Evaluating and Reporting in Solid Wastes and Releases of Radioactive Materials in Liquid and Gaseous Effluents from Light-Water Cooled Nuclear Power Plants," with data summarized on a quarterly basis following the format of Appendix B, thereof.

c. Submit in the ARERR 90 days after January 1 of each year and include a quarterly summary of hourly meteorological data collected during the reporting period.

- This summary may be in the form of an hour-by-hour listing of wind speed, wind direction, atmospheric stability, and precipitation (if measured) on magnetic tape, or in the form of joint frequency distributions of wind speed, wind direction and atmospheric stability.

- Include an assessment of the radiation doses due to the radioactive liquid and gaseous effluents released from the unit or station during the previous calendar year.

- Include an assessment of the radiation doses from radioactive liquid and gaseous effluents to members of the public due to their activities inside the site boundary during the reporting period. Include all assumptions used in making these assessments (that is, specific activity, exposure time and location) in these reports.

- Use the meteorological conditions concurrent with the time of release of radioactive materials in gaseous effluents (as determined by sampling frequency and measurement) for determining the gaseous pathway doses.

- Inoperable radiation monitor periods exceeding 30 continuous days; explain causes of inoperability and actions taken to prevent reoccurrence.

d. Submit the ARERR [Ref. 5.2.1w] 90 days after January 1 of each year and include an assessment of radiation doses to the likely most exposed member of the public from reactor releases and other nearby uranium fuel cycle sources (including doses from primary effluent pathways and direct radiation) for the previous 12 consecutive months to show conformance with 40 CFR 190, Environmental Radiation Protection Standards for Nuclear Power Operation. Acceptable methods for calculating the dose contribution from liquid and gaseous effluents are given in Reg. Guide 1.109, Rev.1.

e. Include in the ARERR the following information for each type of solid waste shipped off-site during the report period:

- Volume (cubic meters),

- Total curie quantity (specify whether determined by measurement or estimate),

- Principle radionuclides (specify whether determined by measurement or estimate),
- Type of waste (example: spent resin, compacted dry waste, evaporator bottoms),
- Type of container (example: LSA, Type A, Type B, Large Quantity),

-AND-

- Solidification agent (example: cement).

f. Include in the ARERR unplanned releases of radioactive materials in gaseous and liquid effluent from the site to unrestricted areas on a quarterly basis.

g. Include in the ARERR any change to this procedure made during the reporting period.

h. Due to the site having shared gaseous and liquid waste systems dose calculations will be performed on a per site bases using the per unit values. This is ALARA and will ensure compliance with 40 CFR 141, National Primary Drinking Water Regulations. Unit specific values are site values divided by two.

3.9 10 CFR 50.75 (g) Implementation

3.9.1 Records of spills or other unusual occurrences involving the spread of contamination in and around the site. These records may be limited to instances when significant contamination remains after decontamination or when there is a reasonable likelihood that contaminants may have spread to inaccessible areas, as in the case of possible seepages.

3.9.2 These records shall include any known information or identification of involved nuclides, quantities, and concentrations.

3.9.3 This information is necessary to ensure all areas outside the radiological-restricted area are documented for surveying and remediation during decommissioning. There is a retention schedule file number where this information is filed in Nuclear Documents Management to ensure all required areas are listed to prevent their omission.

3.10 Reporting/Management Review

3.10.1 Incorporate any changes to this procedure in the ARERR.

3.10.2 Update this procedure when the Radiation Monitoring System, its instruments, or the specifications of instruments are changed.

3.10.3 Review or revise this procedure as appropriate based on the results of the land use census and REMP.

3.10.4 Evaluate any changes to this procedure for potential impact on other related Department Procedures.

3.10.5 Review this procedure during the first quarter of each year and update it if necessary. Review Attachment 3.16, 10 Year Average of 1995-2004 Data, and document using Attachment 3.17, Annual Evaluation of $\overline{\chi/Q}$ **and** $\overline{D/Q}$ Values For All Sectors. The $\overline{\chi/Q}$ and $\overline{D/Q}$ values will be evaluated to ensure all data is within ± 3 standard deviations of the 10 year annual average data and documented by completing Attachment 3.17, Annual Evaluation of $\overline{\chi/Q}$ **and** $\overline{D/Q}$ Values For All Sectors, and filed in accordance with the retention schedule.

4 FINAL CONDITIONS

4.1 None.

5 REFERENCES

5.1 Use References:

5.1.1 "Implementation of Programmatic Controls for Radiological Effluent Technical Specifications in the Administrative Controls Section of the Technical Specifications and the Relocation of Procedural Details of RETS to the Off-Site Dose Calculation Manual or to the Process Control Program (Generic Letter 89-01)", United States Nuclear Regulatory Commission, January 31, 1989

5.1.2 12-THP-6010-RPP-601, Preparation of the Annual Radioactive Effluent Release Report

5.1.3 12-THP-6010-RPP-639, Annual Radiological Environmental Operating Report (AREOR) Preparation And Submittal

5.2 Writing References:

5.2.1 Source References:

a. 10 CFR 20, Standards for Protection Against Radiation

b. 10 CFR 50, Domestic Licensing of Production and Utilization Facilities

c. PMI-6010, Radiation Protection Plan

d. NUREG-0472

e. NUREG-0133

f. Regulatory Guide 1.109, non-listed parameters are taken from these data tables

g. Regulatory Guide 1.111

h. Regulatory Guide 1.113

i. Final Safety Analysis Report (FSAR)

j. Technical Specifications 5.4.1.e, 5.5.1.c, 5.5.3, 5.6.2, and 5.6.3

k. Final Environmental Statement Donald. C. Cook Nuclear Plant, August 1973

l. NUREG-0017

m. ODCM Setpoints for Liquid [and Gaseous] Effluent Monitors (Bases), ENGR 107-04 8112.1 Environs Rad Monitor System

n. HPPOS-223, Consideration of Measurement Uncertainty When Measuring Radiation Levels Approaching Regulatory Limits

o. Watts - Bar Jones (WBJ) Document, R-86-C-001, The Primary Calibration of Eberline Instrument Corporation SPING - 3/4 Low, Mid, and High Range Noble Gas Detectors

p. WBJ Document, R-86-C-003, The Primary Calibration of Eberline Instrument Corporation DAM-4 and Water Monitor

q. 40 CFR 190, Environmental Radiation Protection Standards for Nuclear Power Operations

r. NRC Commitment 6309 (N94083 dated 11/10/94)

s. NRC Commitment 1151

t. NRC Commitment 1217

u. NRC Commitment 3240

v. NRC Commitment 3850

w. NRC Commitment 4859

x. NRC Commitment 6442

y. NRC Commitment 3768

z. DIT-B-00277-00, HVAC Systems Design Flows

aa. Regulatory Guide 1.21

bb. Regulatory Guide 4.1

cc. 1-2-V3-02-Calc #4, Unit Vent Sample Flow rate for isokinetic particulates and Iodine sampling

dd. HPS N13.30-1996, Appendix A Rationale for Methods of Determining Minimum Detectable Amount (MDA) and Minimum Testing Level (MDL

ee. DIT-B-01971-00, Dose Factors for Radioactive Particulate Gaseous Effluents Associated with the Child by the Inhalation Pathway

ff. DIT-B-01987-00, Ground Plane & Food Dose Factors P_i for Radioiodines and Radioactive Particulate Gaseous Effluents

gg. NRC Commitment 1010

5.2.2 General References

a. Cook Nuclear Plant Start-Up Flash Tank Flow Rate letter from D. L. Boston dated January 21, 1997

b. Letter from B.P. Lauzau, Venting of Middle CVCS Hold-Up Tank Directly to Unit Vent, May 1, 1992

c. AEP Design Information Transmittal on Aux Building Ventilation Systems

d. PMP-4030.EIS.001, Event-Initiated Surveillance Testing

e. Environmental Position Paper, Fe Impact on Release Rates, approved 3/14/00

f. Environmental Position Paper, Methodology Change from Sampling Secondary System Gaseous Effluents for Power Changes Exceeding 15% within 1 hr to Responding to Gaseous Alert Alarms, approved 4/4/00

g. CR 02150078, RRS-1000 efficiency curve usage

h. Environmental Position Paper, Unit Vent Compensatory Sampling, approved 4/14/05

R_i Dose Factors

PATHWAY

Nuclide	Ground	Vegetable	Meat	Cow Milk	Goat Milk	Inhalation
H-3	0.0E+00	4.0E+03	3.3E+02	2.4E+03	4.9E+03	1.3E+03
C-14	0.0E+00	3.5E+06	5.3E+05	3.2E+06	3.2E+06	3.6E+04
Cr-51	5.4E+06	1.1E+07	1.5E+06	6.9E+06	8.3E+05	2.1E+04
Mn-54	1.6E+09	9.4E+08	2.1E+07	2.9E+07	3.5E+06	2.0E+06
Fe-59	3.2E+08	9.6E+08	1.7E+09	3.1E+08	4.0E+07	1.5E+06
Co-58	4.4E+08	6.0E+08	2.9E+08	8.4E+07	1.0E+07	1.3E+06
Co-60	2.5E+10	3.2E+09	1.0E+09	2.7E+08	3.2E+07	8.6E+06
Zn-65	8.5E+08	2.7E+09	9.5E+08	1.6E+10	1.9E+09	1.2E+06
Sr-89	2.5E+04	3.5E+10	3.8E+08	9.9E+09	2.1E+10	2.4E+06
Sr-90	0.0E+00	1.4E+12	9.6E+09	9.4E+10	2.0E+11	1.1E+08
Zr-95	2.9E+08	1.2E+09	1.5E+09	9.3E+05	1.1E+05	2.7E+06
Sb-124	6.9E+08	3.0E+09	4.4E+08	7.2E+08	8.6E+07	3.8E+06
I-131	1.0E+07	2.4E+10	2.5E+09	4.8E+11	5.8E+11	1.6E+07
I-133	1.5E+06	4.0E+08	6.0E+01	4.4E+09	5.3E+09	3.8E+06
Cs-134	7.9E+09	2.5E+10	1.1E+09	5.0E+10	1.5E+11	1.1E+06
Cs-136	1.7E+08	2.2E+08	4.2E+07	5.1E+09	1.5E+10	1.9E+05
Cs-137	1.2E+10	2.5E+10	1.0E+09	4.5E+10	1.4E+11	9.0E+05
Ba-140	2.3E+07	2.7E+08	5.2E+07	2.1E+08	2.6E+07	2.0E+06
Ce-141	1.5E+07	5.3E+08	3.0E+07	8.3E+07	1.0E+07	6.1E+05
Ce-144	7.9E+07	1.3E+10	3.6E+08	7.3E+08	8.7E+07	1.3E+07

Units for all except inhalation pathway are m^2 mr sec / yr μCi, inhalation pathway units are mr m^3 / yr μCi.

U_{ap} Values to be Used For the Maximum Exposed Individual

Pathway	Infant	Child	Teen	Adult
Fruits, vegetables and grain (kg/yr)	--	520	630	520
Leafy vegetables (kg/yr)	--	26	42	64
Milk (L/yr)	330	330	400	310
Meat and poultry (kg/yr)	--	41	65	110
Fish (kg/yr)	--	6.9	16	21
Drinking water (L/yr)	330	510	510	730
Shoreline recreation (hr/yr)	--	14	67	12
Inhalation (m^3/yr)	1400	3700	8000	8000

Table E-5 of Reg. Guide 1.109.

B_{ip} Factors for Aquatic Foods
ρCi l / kg ρCi

Element	Fish	Invertebrate
H	9.0E-1	9.0E-1
C	4.6E3	9.1E3
Na	1.0E2	2.0E2
P	1.0E5	2.0E4
Cr	2.0E2	2.0E3
Mn	4.0E2	9.0E4
Fe	1.0E2	3.2E3
Co	5.0E1	2.0E2
Ni	1.0E2	1.0E2
Cu	5.0E1	4.0E2
Zn	2.0E3	1.0E4
Br	4.2E2	3.3E2
Rb	2.0E3	1.0E3
Sr	3.0E1	1.0E2
Y	2.5E1	1.0E3
Zr	3.3E0	6.7E0
Nb	3.0E4	1.0E2
Mo	1.0E1	1.0E1
Tc	1.5E1	5.0E0
Ru	1.0E1	3.0E2
Rh	1.0E1	3.0E2
Te	4.0E2	6.1E3
I	1.5E1	5.0E0
Cs	2.0E3	1.0E3
Ba	4.0E0	2.0E2
La	2.5E1	1.0E3
Ce	1.0E0	1.0E3
Pr	2.5E1	1.0E3
Nd	2.5E1	1.0E3
W	1.2E3	1.0E1
Np	1.0E1	4.0E2

Table A-1 of Reg. Guide 1.109.

D_{aipj} External Dose Factors for Standing on Contaminated Ground
mrem m^2 / hr ρCi

Radionuclide	Total Body	Skin
H-3	0	0
C-14	0	0
Na-24	2.5E-8	2.9E-8
P-32	0	0
Cr-51	2.2E-10	2.6E-10
Mn-54	5.8E-9	6.8E-9
Mn-56	1.1E-8	1.3E-8
Fe-55	0	0
Fe-59	8.0E-9	9.4E-9
Co-58	7.0E-9	8.2E-9
Co-60	1.7E-8	2.0E-8
Ni-63	0	0
Ni-65	3.7E-9	4.3E-9
Cu-64	1.5E-9	1.7E-9
Zn-65	4.0E-9	4.6E-9
Zn-69	0	0
Br-83	6.4E-11	9.3E-11
Br-84	1.2E-8	1.4E-8
Br-85	0	0
Rb-86	6.3E-10	7.2E-10
Rb-88	3.5E-9	4.0E-9
Rb-89	1.5E-8	1.8E-8
Sr-89	5.6E-13	6.5E-13
Sr-91	7.1E-9	8.3E-9
Sr-92	9.0E-9	1.0E-8
Y-90	2.2E-12	2.6E-12
Y-91m	3.8E-9	4.4E-9
Y-91	2.4E-11	2.7E-11
Y-92	1.6E-9	1.9E-9
Y-93	5.7E-10	7.8E-10
Zr-95	5.0E-9	5.8E-9
Zr-97	5.5E-9	6.4E-9
Nb-95	5.1E-9	6.0E-9
Mo-99	1.9E-9	2.2E-9
Tc-99m	9.6E-10	1.1E-9
Tc-101	2.7E-9	3.0E-9
Ru-103	3.6E-9	4.2E-9
Ru-105	4.5E-9	5.1E-9
Ru-106	1.5E-9	1.8E-9
Ag-110m	1.8E-8	2.1E-8
Te-125m	3.5E-11	4.8E-11

Radionuclide	Total Body	Skin
Te-127m	1.1E-12	1.3E-12
Te-127	1.0E-11	1.1E-11
Te-129m	7.7E-10	9.0E-10
Te-129	7.1E-10	8.4E-10
Te-131m	8.4E-9	9.9E-9
Te-131	2.2E-9	2.6E-6
Te-132	1.7E-9	2.0E-9
I-130	1.4E-8	1.7E-8
I-131	2.8E-9	3.4E-9
I-132	1.7E-8	2.0E-8
I-133	3.7E-9	4.5E-9
I-134	1.6E-8	1.9E-8
I-135	1.2E-8	1.4E-8
Cs-134	1.2E-8	1.4E-8
Cs-136	1.5E-8	1.7E-8
Cs-137	4.2E-9	4.9E-9
Cs-138	2.1E-8	2.4E-8
Ba-139	2.4E-9	2.7E-9
Ba-140	2.1E-9	2.4E-9
Ba-141	4.3E-9	4.9E-9
Ba-142	7.9E-9	9.0E-9
La-140	1.5E-8	1.7E-8
La-142	1.5E-8	1.8E-8
Ce-141	5.5E-10	6.2E-10
Ce-143	2.2E-9	2.5E-9
Ce-144	3.2E-10	3.7E-10
Pr-143	0	0
Pr-144	2.0E-10	2.3E-10
Nd-147	1.0E-9	1.2E-9
W-187	3.1E-9	3.6E-9
Np-239	9.5E-10	1.1E-9

Table E-6 of Reg. Guide 1.109.

INSTRUMENT	Minimum Channels Operable[a]	Applicability	Action
1. Gross Radioactivity Monitors Providing Automatic Release Termination			
a. Liquid Radwaste Effluent Line (RRS-1001)	(1)#	At times of release	1
b. Steam Generator Blowdown Line (R-19, DRS 3/4100 +)	(1)#	At times of release**	2
c. Steam Generator Blowdown Treatment Effluent (R-24, DRS 3/4200 +)	(1)#	At times of release	2
2. Gross Radioactivity Monitors Not Providing Automatic Release Termination			
a. Service Water System Effluent Line (R-20, R-28)	(1) per train	At all times	3
3. Continuous Composite Sampler Flow Monitor			
a. Turbine Building Sump Effluent Line	(1)	At all times	3
4. Flow Rate Measurement Devices			
a. Liquid Radwaste Line (RFI-285)	(1)	At times of release	4
b. Discharge Pipes*	(1)	At all times	NA
c. Steam Generator Blowdown Treatment Effluent (DFI-352)	(1)	At times of release	4
d. Individual Steam Generator sample flow to Blowdown radiation monitors alarm (DFA-310, 320, 330 and 340)	(1) per generator	At times of release	5

* Pump curves and valve settings may be utilized to estimate flow; in such cases, Action Statement 4 is not applicable. This is primarily in reference to start up flash tank flow.

\# OPERABILITY of RRS-1001 includes OPERABILITY of sample flow switch RFS-1010, which is an attendant instrument as defined in Technical Specification section 1.1, under the term Operable - Operability. This item is also applicable for all Eberline liquid monitors (and their respective flow switches) listed here.

** Since these monitors can be used for either batch or continuous release the appropriate action statement of 1 or 2 should apply (that is, Action 1 if a steam generator drain is being performed in lieu of Action 2). It is possible, due to the steam generator sampling system lineup, that BOTH action statements are actually entered. This would be the case when sampling for steam generator draining requires duplicate samples while the sample system is lined up to discharge to the operating units blowdown system. In this case the steam generator drain samples can fulfill the sample requirement for Action 2 also. Action 2 would be exited when sampling was terminated.

\+ Some Westinghouse (R) radiation monitors are being replaced by Eberline (DRS) monitors. Either monitor can fulfill the operability requirement. Ensure surveillances are current for operability of the instrumentation prior to using it to satisfy applicability requirement.

a **IF** an RMS monitor is inoperable solely as the result of the loss of its control room alarm annunciation, **THEN** one of the following actions is acceptable to satisfy the ODCM action statement compensatory surveillance requirement:

1. Collect grab samples and conduct laboratory analyses per the specific monitor's action statement,

   -OR-

2. Collect local monitor readings at a frequency equal to or greater than (more frequently than) the action frequency.

IF the RMS monitor is inoperable for reasons other than the loss of control room annunciation, **THEN** the only acceptable action is taking grab samples and conducting laboratory analyses as the reading is equivalent to a grab sample when the monitor is functional.

TABLE NOTATION

Action 1 With the number of channels OPERABLE less than required by the Minimum Channels OPERABLE requirement, effluent releases may continue, provided that prior to initiating a release:

1. At least two independent samples are analyzed in accordance with Step 3.2.3a and;
2. At least two technically qualified members of the Facility Staff independently verify the discharge valving. Otherwise, suspend release of radioactive effluents via this pathway.

Action 2 With the number of channels OPERABLE less than required by the Minimum Channels OPERABLE requirement, effluent releases via this pathway may continue for up to 30 days provided grab samples are analyzed for gross radioactivity (beta or gamma) at a limit of detection of at least 10-7 μCi/gram:

1. At least once per shift when the specific activity of the secondary coolant is > 0.01 μCi/gram DOSE EQUIVALENT I-131.
2. At least once per 24 hours when the specific activity of the secondary coolant is ≤ 0.01 μCi/gram DOSE EQUIVALENT I-131.

After 30 days, **IF** the channels are not OPERABLE, **THEN** continue releases with required grab samples provide a description of why the inoperability was not corrected in the next Annual Radiological Effluent release Report.

Action 3 With the number of channels OPERABLE less than required by the Minimum Channels OPERABLE requirement, effluent releases via this pathway may continue for up to 30 days provided that at least once per shift, grab samples are collected and analyzed for gross radioactivity (beta or gamma) at a lower limit of detection of at least 10-7 μCi/ml. Since the Westinghouse ESW monitors (R-20 and R-28) are only used for post LOCA leak detection and have no auto trip function associated with them, grab samples are only needed if the Containment Spray Heat Exchanger is in service. After 30 days, **IF** the channels are not OPERABLE, **THEN** continue releases with grab samples once per shift and provide a description of why the inoperability was not corrected in the next Annual Radiological Effluent release Report.

Action 4 With the number of channels OPERABLE less than required by the Minimum Channels OPERABLE requirement, effluent releases via this pathway may continue for up to 30 days provided the flow rate is estimated at least once per 4 hours during actual releases. After 30 days, **IF** the channels are not OPERABLE, **THEN** continue releases with grab samples once per shift and provide a description of why the inoperability was not corrected in the next Annual Radiological Effluent release Report.

Action 5 With the number of channels OPERABLE less than required by the Minimum Channels OPERABLE requirement, effluent releases via this pathway may continue for up to 30 days provided the flow rate is verified to be within the required band at least once per 4 hours during actual releases. After 30 days, **IF** the channels are not OPERABLE, **THEN** continue releases with grab samples once per shift and provide a description of why the inoperability was not corrected in the next Annual Radiological Effluent release Report. **IF** the flow cannot be obtained within the desired band, **THEN** declare the radiation monitor inoperable and enter the appropriate actions statement, Action 2.

Compensatory actions are governed by PMP-4030-EIS-001, Event-Initiated Surveillance Testing

Instrument	CHANNEL CHECK	SOURCE CHECK	CHANNEL CALIBRATION	CHANNEL OPERATIONAL TEST
1. Gross Radioactivity Monitors Providing Automatic Release Termination				
a. Liquid Radwaste Effluent Line (RRS-1001)	D*	P	B(3)	Q(5)
b. Steam Generator Blowdown Effluent Line	D*	M	B(3)	Q(1)
c. Steam Generator Blowdown Treatment Effluent Line	D*	M	B(3)	Q(1)
2. Gross Radioactivity Monitors Not Providing Automatic Release Termination				
a. Service Water System Effluent Line	D	M	B(3)	Q(2)
3. Continuous Composite Samplers				
a. Turbine Building Sump Effluent Line	D*	N/A	N/A	N/A
4. Flow Rate Measurement Devices				
a. Liquid Radwaste Effluent	D(4)*	N/A	B	Q
b. Steam Generator Blowdown Treatment Line	D(4)*	N/A	N/A	N/A

* During releases via this pathway

TABLE NOTATION

1. Demonstrate with the CHANNEL OPERATIONAL TEST that automatic isolation of this pathway and control room alarm annunciation occurs if any of the following conditions exists:
   1. Instrument indicates measured levels above the alarm/trip setpoint.
   2. Circuit failure.*
   3. Instrument indicates a downscale failure.*
   4. Instrument control not set in operating mode.*
   5. Loss of sample flow. *

2. Demonstrate with the CHANNEL OPERATIONAL TEST that control room alarm annunciation occurs if any of the following conditions exists:
   1. Instrument indicates measured levels above the alarm setpoint.
   2. Circuit failure.
   3. Instrument indicates a downscale failure.
   4. Instrument controls not set in operating mode.

3. Perform the initial CHANNEL CALIBRATION using one or more sources with traceability back to the National Institute of Standards and Technology (NIST). These sources permit calibrating the system over its intended range of energy and measurement range. For subsequent CHANNEL CALIBRATION, sources that have been related to the initial calibration may be used.

4. Verify indication of flow during periods of release with the CHANNEL CHECK. Perform the CHANNEL CHECK at least once per 24 hours on days on which continuous, periodic or batch releases are made.

5. Demonstrate with the CHANNEL OPERATIONAL TEST that automatic isolation of this pathway and control room alarm annunciation occurs if any of the following conditions exists:
   1. Instrument indicates measured levels above the alarm/trip setpoint.
   2. Circuit failure.**
   3. Instrument indicates a downscale failure.**
   4. Instrument control not set in operating mode.*
   5. Loss of sample flow.

* Instrument indicates, but does not provide for automatic isolation

** Instrument indicates, but does not necessarily cause automatic isolation. No credit is taken for the automatic isolation on such occurrences.

Operations currently performs the routine channel checks and source checks. Maintenance and Radiation Protection perform channel calibrations and channel operational tests. Chemistry performs the channel check on the continuous composite sampler. These responsibilities are subject to change without revision to this document.

Instrument (Instrument #)	Operable[1]	Minimum Channels Action	Action
1. Condenser Evacuation System			
a. Noble Gas Activity Monitor (SRA-1905/2905)	(1)	****	6
b. Flow Rate Monitor (SFR-401, 1/2-MR-054 and/or SRA- 1910/2910) OR (SFR-402 and 1/2-MR-054)	(1)	****	5
2. Unit Vent. Auxiliary Building Ventilation System			
a. Noble Gas Activity Monitor (VRS-1505/2505)	(1)	*	6
b. Iodine Sampler Cartridge for VRA-1503/2503	(1)	*	8
c. Particulate Sampler Filter for VRA-1501/2501	(1)	*	8
d. Effluent System Flow Rate Measuring Device (VFR-315, MR-054 and/or VFR-1510/2510)	(1)	*	5
e. Sampler Flow Rate Measuring Device (VFS-1521/2521)	(1)	*	5
3. Containment Purge and Containment Pressure Relief (Vent) **			
a. Containment Noble Gas Activity Monitor ERS-13/1405 (ERS-23/2405)	(1)	****[2,3]	7
b. Containment Particulate Sampler Filter ERS-13/1401 (ERS-23/2401)	(1)	****	10
4. Waste Gas Holdup System and CVCS HUT (Batch releases)**			
a. Noble Gas Activity Alarm and Termination of Waste Gas Releases (VRS-1505/2505)	(1)	****[4]	9
5. Gland Seal Exhaust			
a. Noble Gas Activity Monitor (SRA-1805/2805)	(1)	****	6
b. Flow Rate Monitor (SFR-201, MR-054 or SFR-1810/2810)	(1)	****	5

* At all times

** Containment Purge and other identified gaseous batch releases can be released utilizing the same double sampling compensatory action requirements of action 9 identified here even if there is no termination function associated with it like that associated with the two specific tank types listed here.

**** During releases via this pathway

TABLE NOTATIONS

1. **IF** an RMS monitor is inoperable solely as the result of the loss of it's control room alarm annunciation, **THEN** one of the following actions is acceptable to satisfy the ODCM action statement compensatory surveillance requirement:

   1. Take grab samples and conduct laboratory analyses per the specific monitor's action statement,
      -OR-
   2. Take local monitor readings at a frequency equal to or greater than (more frequently than) the action frequency.

   IF the RMS monitor is inoperable for reasons other than the loss of control room annunciation, **THEN** the only acceptable action is taking grab samples and conducting laboratory analyses as the reading is equivalent to a grab sample when the monitor is functional.

2. Consider releases as occurring "via this pathway" under the following conditions:

   - The Containment Purge System is in operation and Containment Operability is applicable,
     -OR-
   - The Containment Purge System is in operation and is being used as the vent path for the venting of contaminated systems within the containment building prior to completing both degas and depressurization of the RCS.

   IF neither of the above are applicable, **THEN** the containment purge system is acting as a ventilation system (an extension of the Auxiliary Building) and is covered by Item 2 of this Attachment.

   -OR-
   - A Containment Pressure Relief (CPR) is being performed.

   Once Purge (clean-up) has been completed and 'Ventilation' mode of Purge has commenced – resultant return to 'Clean-up' mode can be made with no additional sampling requirements or paperwork – so long as either ERS-1305/2305 **OR** ERS-1405/2405 are operable. Containment particulate channels are not needed since the RCS has been degassed and depressurized so leak detection is not an issue.

3. For purge (including pressure relief) purposes only. Reference TS 3.6.1, Containment Purge Supply and Exhaust System Isolation Instrumentation and 3.4.15, RCS Leakage Detection Instrumentation for additional information.

4. For waste gas releases only, see Item 2 (Unit Vent, Auxiliary Building Ventilation System) for additional requirements.

ACTIONS

5. With the number of channels OPERABLE less than required by the Minimum Channels OPERABLE requirement, effluent releases via this pathway may continue for up to 30 days provided the flow rate is estimated at least once per 4 hours. After 30 days, **IF** the channels are not OPERABLE, **THEN** continue releases with estimation of the flow rate once per 4 hours and provide a description of why the inoperability was not corrected in the next Annual Radiological Effluent Release Report.

6. With the number of channels OPERABLE less required by the Minimum Channels OPERABLE requirement, effluent releases via this pathway may continue for up to 30 days provided grab samples are taken at least once per shift and these samples are analyzed for gross activity within 24 hours. After 30 days, **IF** the channels are not OPERABLE, **THEN** continue releases with grab samples once per shift and provide a description of why the inoperability was not corrected in the next Annual Radiological Effluent release Report.

7. With the number of channels OPERABLE less than required by the Minimum Channels OPERABLE requirements, immediately suspend PURGING or VENTING (CPR) of radioactive effluents via this pathway.

8. With the number of channels OPERABLE less than required by the Minimum Channels OPERABLE requirement, effluent releases via the affected pathway may continue for up to 30 days provided samples required for weekly analysis are continuously collected with auxiliary sampling equipment as required in Attachment 3.7, Radioactive Gaseous Waste Sampling and Analysis Program. After 30 days, **IF** the channels are not OPERABLE, **THEN** continue releases with sample collection by auxiliary sampling equipment and provide a description of why the inoperability was not corrected in the next Annual Radiological Effluent Release Report.

   Sampling evolutions are not an interruption of a continuous release or sampling period.

9. With the number of channels OPERABLE less than required by the Minimum Channels OPERABLE requirement, the contents of the tank(s) may be released to the environment for up to 14 days provided that prior to initiating the release:

   a. At least two independent samples of the tank's contents are analyzed and,
   b. At least two technically qualified members of the Facility Staff independently verify the release rate calculations and discharge valve lineups; otherwise, suspend release of radioactive effluents via this pathway.

After 14 days, **IF** the channels are not OPERABLE, **THEN** continue releases with sample collection by auxiliary sampling equipment and provide a description of why the inoperability was not corrected in the next Annual Radiological Effluent Release Report.

10. See Technical Specification 3.4.15, RCS Leakage Detection System Instrumentation.

Compensatory actions are governed by PMP-4030-EIS-001, Event Initiated Surveillance Testing.

Instrument	CHANNEL CHECK	SOURCE CHECK	CHANNEL CALIBRATION	CHANNEL OPERATIONAL TEST
1. Condenser Evacuation System	Alarm Only			
a. Noble Gas Activity Monitor (SRA-1905/2905)	D**	M	B(2)	Q(1)
b. System Effluent Flow Rate (SFR-401, SFR-402, MR-054, SRA-1910/2910)	D**	NA	B	Q
2. Auxiliary Building Unit Ventilation System	Alarm Only			
a. Noble Gas Activity Monitor (VRS-1505/2505)	D*	M	B(2)	Q(1)
b. Iodine Sampler (For VRA-1503/2503)	W*	NA	NA	NA
c. Particulate Sampler (For VRA-1501/2501)	W*	NA	NA	NA
d. System Effluent Flow Rate Measurement Device (VFR-315, MR-054, VRS-1510/2510)	D*	NA	B	Q
e. Sampler Flow Rate Measuring Device (VFS-1521/2521)	D*	N/A	B	Q
3. Containment Purge System and Containment Pressure Relief	Alarm and Trip			
a. Containment Noble Gas Activity Monitor (ERS-13/1405 and ERS-23/2405)	S	P	B(2)	Q
b. Containment Particulate Sampler (ERS-13/1401 and ERS-23/2401)	S	NA	B	Q
4. Waste Gas Holdup System Including CVCS HUT	Alarm and Trip			
a. Noble Gas Activity Monitor Providing Alarm and Termination (VRS-1505/2505)	P	P	B(2)	Q(3)
5. Gland Seal Exhaust	Alarm Only			
a. Noble Gas Activity (SRA-1805/2805)	D**	M	B(2)	Q(1)
b. System Effluent Flow Rate (SFR-201, MR-054, SRA-1810/2810)	D**	NA	B	Q

* At all times

** During releases via this pathway

TABLE NOTATIONS

1. Demonstrate with the CHANNEL OPERATIONAL TEST that control room alarm annunciation occurs if any of the following conditions exists:
   1. Instrument indicates measured levels above the alarm setpoint.
   2. Circuit failure.
   3. Instrument indicates a downscale failure.
   4. Instrument controls not set in operate mode.
2. Perform the initial CHANNEL CALIBRATION using one or more sources with traceability back to the NIST. These sources permit calibrating the system over its intended range of energy and measurement range. For subsequent CHANNEL CALIBRATION, sources that have been related to the initial calibration may be used.
3. Demonstrate with the CHANNEL OPERATIONAL TEST that automatic isolation of this pathway and control room alarm annunciation occurs if any of the following conditions exists:
   1. Instrument indicates measured levels above the alarm/trip setpoint.
   2. Circuit failure.*
   3. Instrument indicates a downscale failure.*
   4. Instrument controls not set in operate mode.*

* Instrument indicates, but does not provide automatic isolation.

Operations currently performs the routine channel checks, and source checks. Maintenance and Radiation Protection perform channel calibrations and channel operational tests. These responsibilities are subject to change without revision to this document.

[Ref. 5.2.1s]

LIQUID RELEASE TYPE	SAMPLING FREQUENCY	MINIMUM ANALYSIS FREQUENCY	TYPE OF ACTIVITY ANALYSIS	LOWER LIMIT OF DETECTION (LLD) (μCi/ml) [a]
A. Batch Waste Release Tanks [c]	P Each Batch	P Each Batch	Principal Gamma Emitters [e]	$5x10^{-7}$
			I-131	$1x10^{-6}$
	P Each Batch	P Each Batch	Dissolved and Entrained Gases (Gamma Emitters)	$1x10^{-5}$
	P Each Batch	M Composite [b]	H-3	$1x10^{-5}$
			Gross Alpha	$1x10^{-7}$
	P Each Batch	Q Composite [b]	Sr-89, Sr-90	$5x10^{-8}$
			Fe-55	$1x10^{-6}$
B. Plant Continuous Releases* [d]	Daily	W Composite [b]	Principal Gamma Emitters [e]	$5x10^{-7}$
			I-131	$1x10^{-6}$
	M Grab Sample	M	Dissolved and Entrained Gases (Gamma Emitters)	$1x10^{-5}$
	Daily	M Composite [b]	H-3	$1x10^{-5}$
			Gross Alpha	$1x10^{-7}$
	Daily	Q Composite [b]	Sr-89, Sr-90	$5x10^{-8}$
			Fe-55	$1x10^{-6}$

*During releases via this pathway

This table provides the minimum requirements for the liquid sampling program. If additional sampling is performed then those sample results can be used to quantify releases in lieu of composite data for a more accurate quantification. Examples of these samples are the 72 hour secondary coolant activity and Monitor Tank tritium samples.

TABLE NOTATION

a. The lower limit of detection (LLD) is defined in Table Notation A. of Attachment 3.20, Maximum Values for Lower Limits of Detections[A,B] - REMP

b. A composite sample is one in which the quantity of liquid sampled is proportional to the quantity of liquid waste discharged and in which the method of sampling employed results in a specimen which is representative of the liquids released.

c. A batch release is the discharge of liquid wastes of a discrete volume. Prior to sampling for analysis, isolate, recirculate or sparge each batch to ensure thorough mixing. Examples of these are Monitor Tank and Steam Generator Drains. Before a batch is released the tank is sampled and analyzed to determine that it can be released without exceeding federal standards.

d. A continuous release is the discharge of liquid of a non-discrete volume; e.g. from a volume of system that has an input flow during the continuous release. This type of release includes the Turbine Room Sump, Steam Generator Blowdown and the Steam Generator Sampling System.

e. The principal gamma emitters for which the LLD specification applies exclusively are the following radionuclides: Mn-54, Fe-59, Co-58, Co-60, Zn-65, Mo-99, Cs-134, Cs-137, Ce-141 and Ce-144. This list does not mean that only these nuclides are to be detected and reported. Identify and report other peaks, which are measurable and identifiable, together with the above nuclides.

Gaseous Release Type	Frequency	Minimum Analysis Frequency	Type of Activity Analysis	Lower Limit of Detection (μCi/cc) [a]
a. Waste Gas Storage Tanks and CVCS HUTs	**P** Each Tank Grab Sample	**P** Each Tank	Principal Gamma Emitters [d]	1×10^{-4}
			H-3	1×10^{-6}
b. Containment Purge	**P** Each Purge Grab Sample	**P** Each Purge	Principal Gamma Emitters [d]	1×10^{-4}
CPR (vent)**	Twice per Month	Twice per Month		
			H-3	1×10^{-6}
c. Condenser Evacuation System Gland Seal Exhaust* [i]	**W** or **M** Grab Sample	**M** Particulate Sample	Principal Gamma Emitters [d]	1×10^{-11}
		M	H-3	1×10^{-6}
		W [g] Noble Gas	Principle Gamma Emitters [d]	1×10^{-4}
		M Iodine Adsorbing Media	I-131	1×10^{-12}
	Continuous	**W** [g] Noble Gas Monitor	Noble Gases	1×10^{-6}
d. Auxiliary Building Unit Vent*	Continuous [c]	**W** [b] Iodine Adsorbing Media	I-131	1×10^{-12}
	Continuous [c]	**W** [b] Particulate Sample	Principal Gamma Emitters [d]	1×10^{-11}
	Continuous [c]	**M** Composite Particulate Sample	Gross Alpha	1×10^{-11}
	W Grab Sample	**W** [h] H-3 Sample	H-3	1×10^{-6}
		W [gj] Noble Gas	Principle Gamma Emitters [d]	1×10^{-4}
	Continuous [c]	**Q** Composite Particulate Sample	Sr-89, Sr-90	1×10^{-11}
	Continuous [c]	Noble Gas Monitor	Noble Gases	1×10^{-6}
e. Incinerated Oil [e]	**P** Each Batch [f]	**P** Each Batch [f]	Principal Gamma Emitters [d]	5×10^{-7}

*During releases via this pathway
**Only a twice per month sampling program for containment noble gases and H_3 is required

This table provides the minimum requirements for the gaseous sampling program. If additional sampling is performed then those sample results can be used to quantify releases in lieu of composite data for a more accurate quantification. Examples of these samples are verification or compensatory action sample results.

TABLE NOTATION

a. The lower limit of detection (LLD) is defined in Table Notation A. of Attachment 3.20, Maximum Values for Lower Limits of Detections[A,B] - REMP

b. Change samples at least once per 7 days and complete analyses within 48 hours after changing. Perform analyses at least once per 24 hours for 7 days following each shutdown, startup or THERMAL POWER change greater than 15% per hour of RATED THERMAL POWER. WHEN samples collected for 24 hours are analyzed, THEN the corresponding LLDs may be increased by a factor of 10. This requirement does not apply IF (1) analysis shows that DOSEQ I131 concentration in the RCS has not increased more than a factor of 3; and (2) the noble gas monitor shows that effluent activity has not increased more than a factor of 3. IF the daily sample requirement has been entered, THEN it can be exited early once both the radiation monitor reading and the RCS DOSEQ I131 levels have returned to within the factor of 3 of the pre-event 'normal'.[Ref. 5.2.1y]

c. Know the ratio of the sample flow rate to the sampled stream flow rate for the time period covered by each dose or dose rate calculation made in accordance with steps 3.2.4a, 3.2.4b, and 3.2.4c of this document.

Sampling evolutions are not an interruption of a continuous release or sampling period.

d. The principal gamma emitters for which the LLD specification applies exclusively are the following radionuclides: Kr-87, Kr-88, Xe-133, Xe-133M, Xe-135 and Xe-138 for gaseous emissions and Mn-54, Fe-59, Co-58, Co-60, Zn-65, Mo-99, Cs-134, Cs-137, Ce-141 and Ce-144 for particulate emissions. This list does not mean that only these nuclides are to be detected and reported. Identify and report other peaks, which are measurable and identifiable, together with the above nuclides.

e. Releases from incinerated oil are discharged through the Auxiliary Boiler System. Account for releases based on pre-release grab sample data.

f. Collect samples of waste oil to be incinerated from the container in which the waste oil is stored (example: waste oil storage tanks, 55 gal. drums) prior to transfer to the Auxiliary Boiler System. Ensure samples are representative of container contents.

g. Obtain and analyze a gas marinelli grab sample weekly for noble gases effluent quantification.

h. Take tritium grab samples at least once per 24 hours when the refueling cavity is flooded.

i. Grab sampling of the Gland Seal Exhaust pathway need not be performed if the RMS low range channel (SRA-1805/2805) readings are less than 1E-6 μC/cc. Attach the RMS daily averages in lieu of sampling. This is based on operating experience indicating no activity is detected in the Gland Seal Exhaust below this value. Compensatory sampling for out of service monitor is still required in the event 1805/2805 is inoperable.

j. Sampling and analysis shall also be performed following shutdown, startup or THERMAL POWER change exceeding 15% of RATED THERMAL POWER within a one hour period. This noble gas sample shall be performed within four hours of the event. Evaluation of the sample results, based on previous samples, will be performed to determine if any further sampling is necessary.

Liquid Factors		
Monitor Description	Monitor Number	MRP #
U 1 SG Blowdown	1R19/24, DRS 3100/3200*	0.35
U 2 SG Blowdown	2R19/24, DRS 4100/4200*	0.35
U 1 & 2 Liquid Waste Discharge	RRS-1000	0.30

Sources of radioactivity released from the Turbine Room Sump (TRS) typically originate from the secondary cycle which is already being monitored by instrumentation that utilizes multiple release point (MRP) factors. The MRP is an administrative value that is used to assist with maintaining releases ALARA. The TRS has no actual radiation monitor, but utilizes an automatic compositor for monitoring what has been released. The batch release path, through RRS-1000, is the predominant release path by several magnitudes. Tritium is the predominant radionuclide released from the site and the radiation monitors do not respond to this low energy beta emitter. Based on this information and the large degree of conservatism built into the radiation monitor setpoint methodology it does not appear to warrant further reduction for the TRS release path since its source is predominantly the secondary cycle which is adequately covered by this factor.

Gaseous Factors			
Monitor Description	Monitor Number	Flow Rate (cfm)	MRP #
Unit 1			
Unit Vent	VRS-1500	186,600	0.54
Gland Seal Vent	SRA-1800	1,260	0.00363
Steam Jet Air Ejector	SRA-1900	3,600 (b)	0.01
Start Up FT Vent		1,536	0.004
Total		192,996	
Unit 2			
Unit Vent	VRS-2500	143,400	0.41
Gland Seal Vent	SRA-2800	5,508 (a)	0.02
Steam Jet Air Ejector	SRA-2900	3,600 (b)	0.01
Start Up FT Vent		1,536	0.004
Total		154,044	

* Either R-19, 24, DRS 3/4100 or 3/4200 can be used for blowdown monitoring as the Eberline monitors (DRS) are replacing the Westinghouse (R) monitors.

\# Nominal Values

a Two release points of 2,754 cfm each are totaled for this value.

b This is the total design maximum of the Start Up Air Ejectors. This is a conservative value for unit 1.

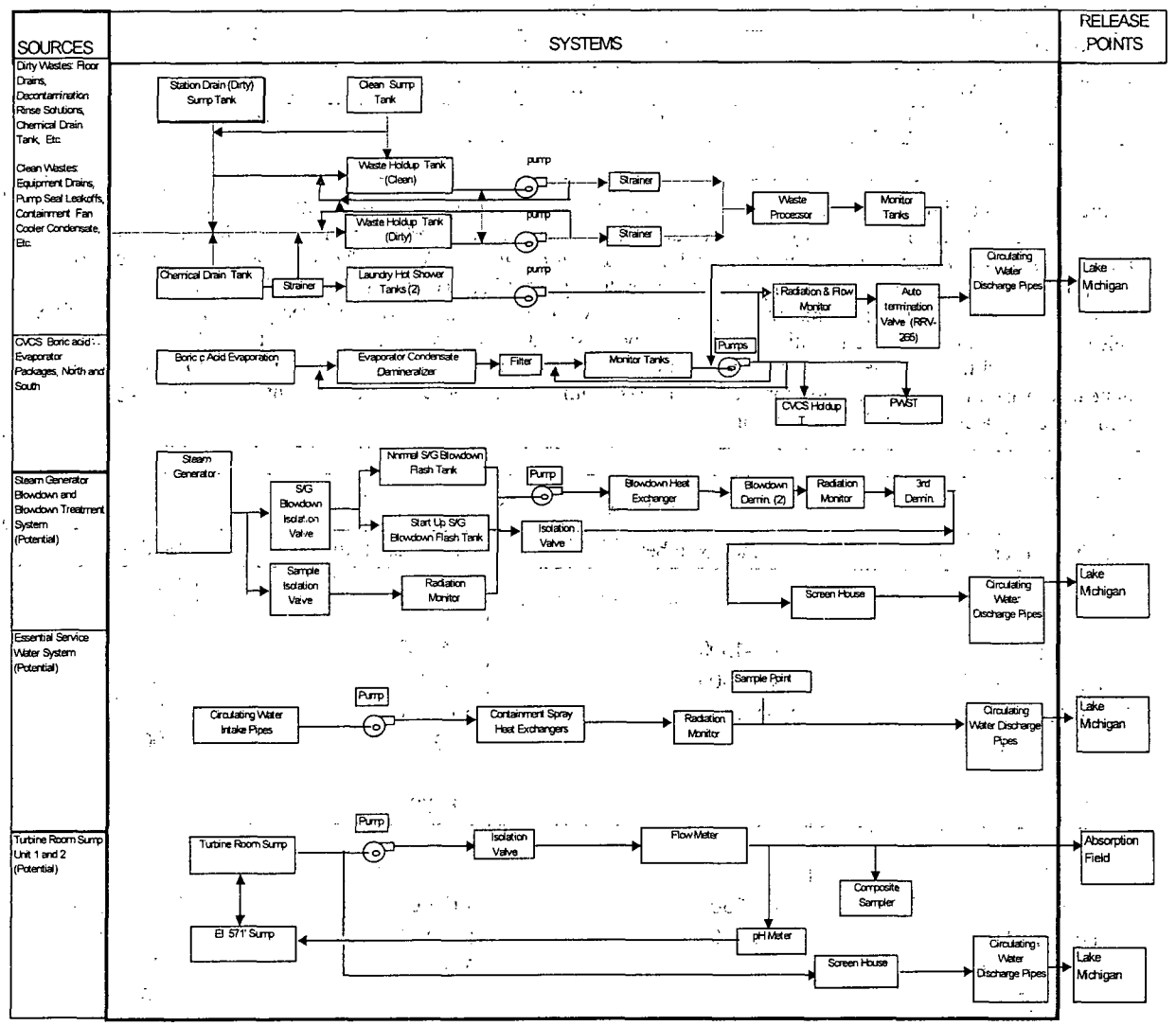
SOURCES
SYSTEMS
RELEASE POINTS
Dirty Wastes: Floor Drains, Decontamination Rinse Solutions, Chemical Drain Tank, Etc.
Clean Wastes: Equipment Drains, Pump Seal Leakoffs, Containment Fan Cooler Condensate, Etc.
CVCS Boric acid Evaporator Packages, North and South
Steam Generator Blowdown and Blowdown Treatment System (Potential)
Essential Service Water System (Potential)
Turbine Room Sump Unit 1 and 2 (Potential)
Station Drain (Dirty) Sump Tank
Clean Sump Tank
Waste Holdup Tank (Clean)
Waste Holdup Tank (Dirty)
pump
Strainer
Waste Processor
Monitor Tanks
Chemical Drain Tank
Laundry Hot Shower Tanks (2)
Radiation & Flow Monitor
Auto termination Valve (RRV-265)
Circulating Water Discharge Pipes
Lake Michigan
Boric Acid Evaporator
Evaporator Condensate Demineralizer
Filter
Monitor Tanks
Pumps
CVCS Holdup T
PWST
Steam Generator
S/G Blowdown Isolation Valve
Normal S/G Blowdown Flash Tank
Start Up S/G Blowdown Flash Tank
Pump
Blowdown Heat Exchanger
Blowdown Demin. (2)
Radiation Monitor
3rd Demin.
Isolation Valve
Sample Isolation Valve
Screen House
Circulating Water Discharge Pipes
Lake Michigan
Sample Point
Circulating Water Intake Pipes
Pump
Containment Spray Heat Exchangers
Radiation Monitor
Circulating Water Discharge Pipes
Lake Michigan
Turbine Room Sump
Pump
Isolation Valve
Flow Meter
Absorption Field
Composite Sampler
El 571' Sump
pH Meter
Screen House
Circulating Water Discharge Pipes
Lake Michigan

SYSTEM	COMPONENTS		CAPACITY	FLOW RATE
	TANKS	PUMPS	(EACH)	(EACH)*
I Waste Disposal System				
+ Chemical Drain Tank	1	1	600 GAL.	20 GPM
+ Laundry & Hot Shower Tanks	2	1	600 GAL.	20 GPM
+ Monitor Tanks	4	2	21,600 GAL.	150 GPM
+ Waste Holdup Tanks	2		25,000 GAL.	
+ Waste Evaporators	3			30 GPM
+ Waste Evaporator Condensate Tanks	2	2	6,450 GAL	150 GPM
II Steam Generator Blowdown and Blowdown Treatment Systems				
+ Start-up Flash Tank (Vented)#	1		1,800 GAL.	580 GPM
+ Normal Flash Tank (Not Vented)	1		525 GAL.	100 GPM
+ Blowdown Treatment System		1		60 GPM
III Essential Service Water System				
+ Water Pumps		4		10,000 GPM
+ Containment Spray Heat Exchanger Outlet	4			3,300 GPM
IV Circulating Water Pumps				
Unit 1		3		230,000 GPM
Unit 2		4		230,000 GPM

* Nominal Values

\# The 580 gpm value is calculated from the Estimated Steam Generator Blowdown Flow vs. DRV Valve Position letter prepared by M. J. O'Keefe, dated 9/27/93. This is 830 gpm times the 70% that remains as liquid while the other 30% flashes to steam and exhausts out the flash tank vent.

This includes the following monitors: RRS-1000, DRS 3100, DRS 3200, DRS 4100, and DRS 4200. [Ref. 5.2.1p]

NUCLIDE	EFFICIENCY (cpm/μCi/cc)
I-131	3.78 E7
Cs-137	3.00 E7
Cs-134	7.93 E7
Co-60	5.75 E7
Co-58	4.58 E7
Cr-51	3.60 E6
Mn-54	3.30 E7
Zn-65	1.58 E7
Ag-110M	9.93 E7
Ba-133	4.85 E7
Ba-140	1.92 E7
Cd-109	9.58 E5
Ce-139	3.28 E7
Ce-141	1.92 E8
Ce-144	4.83 E6
Co-57	3.80 E7
Cs-136	1.07 E8
Fe-59	2.83 E7
Sb-124	5.93 E7
I-133	3.40 E7
I-134	7.23 E7
I-135	3.95 E7
Mo-99	8.68 E6
Na-24	4.45 E7
Nb-95	3.28 E7
Nb-97	3.50 E7
Rb-89	5.00 E7
Ru-103	3.48 E7
Ru-106	1.23 E7
Sb-122	2.55 E7
Sb-125	3.15 E7
Sn-113	7.33 E5
Sr-85	3.70 E7
Sr-89	2.88 E3
Sr-92	3.67 E7
Tc-99M	3.60 E7
Y-88	5.25 E7
Zr-95	3.38 E7
Zr-97	3.10 E7
Kr-85	1.56 E5
Kr-85M	3.53 E7
Kr-88	4.10 E7
Xe-131M	8.15 E5
Xe-133	7.78 E6
Xe-133M	5.75 E6
Xe-135	3.83 E7

Counting Efficiency Curve for R-19

Efficiency Factor = 4.2 E6 cpm/uCi/ml

(Based on empirical data taken during pre-operational testing with Cs-137)

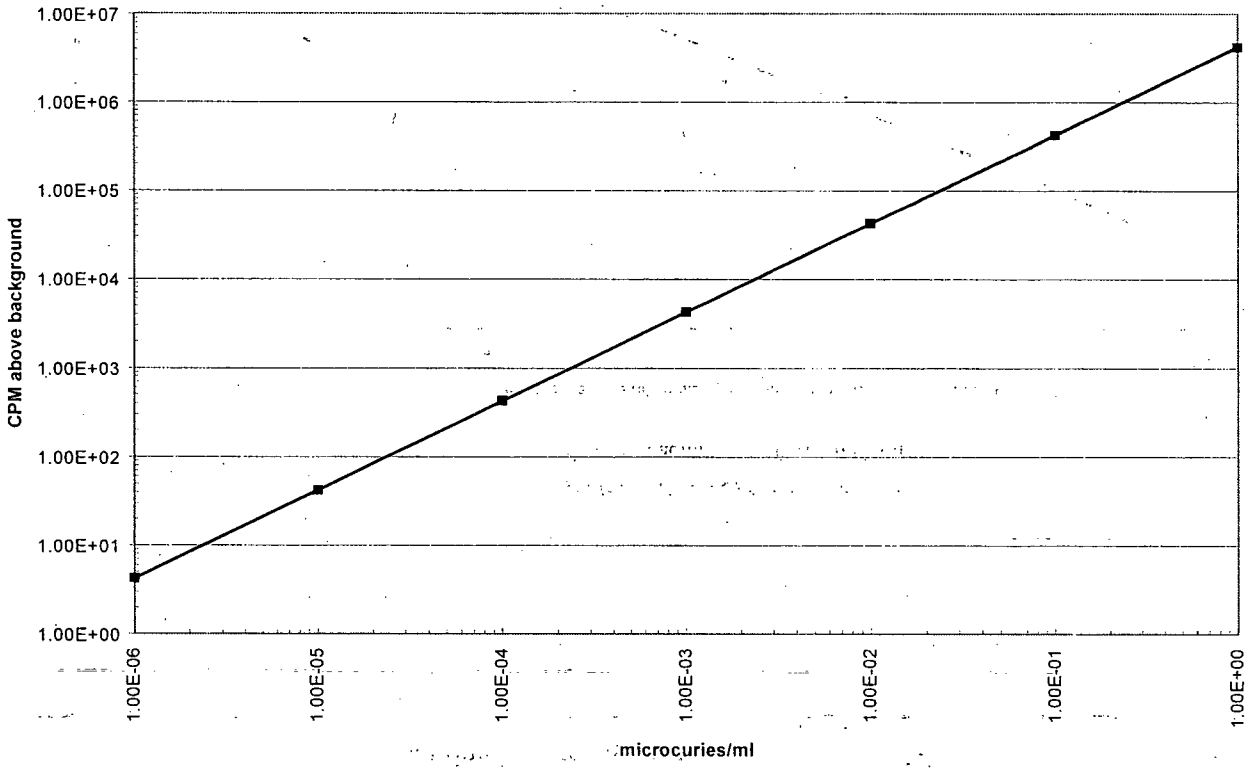

Counting Efficiency Curve for R-24

Efficiency Factor = 7.5E6 cpm/uCi/ml

(Based on empirical data taken during pre-operational testing with Mn-54)

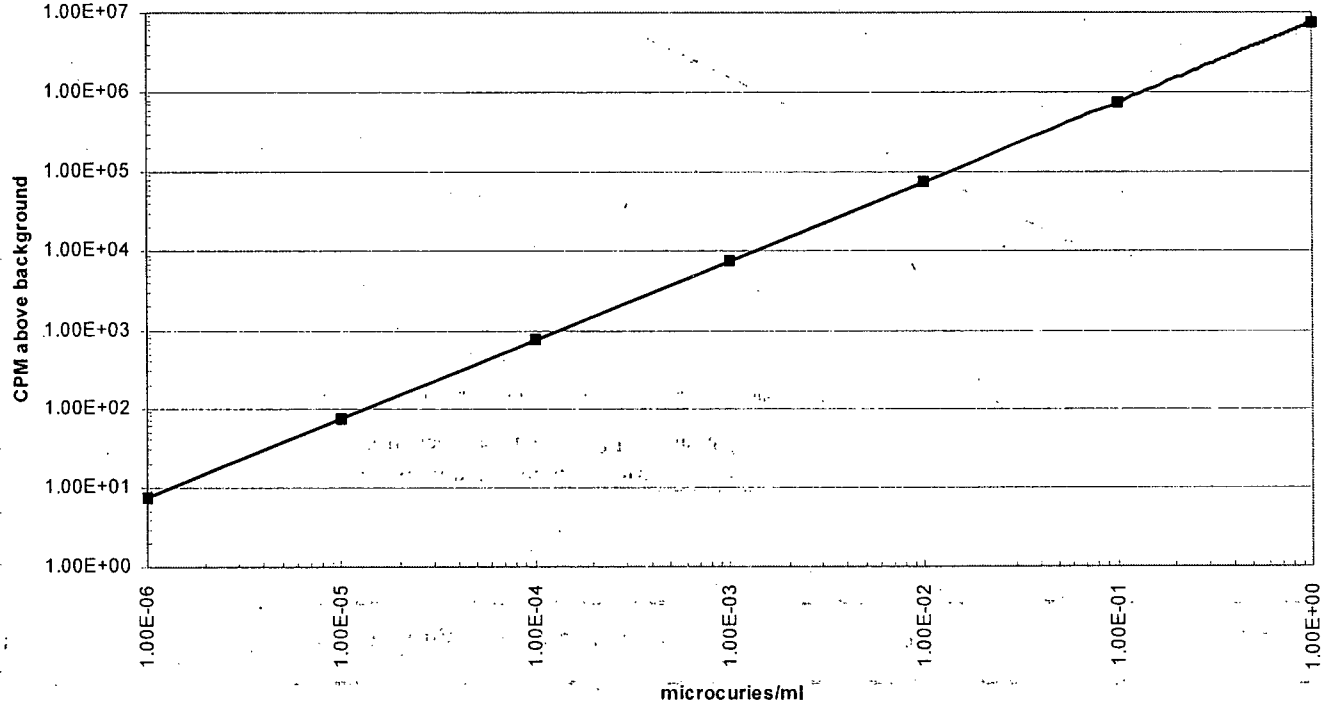

Counting Efficiency Curve for R-20 and R-28
Efficiency Factor = 4.3 E6 cpm/uCi/ml

(Based on empirical data taken during pre-operational testing with Co-58)

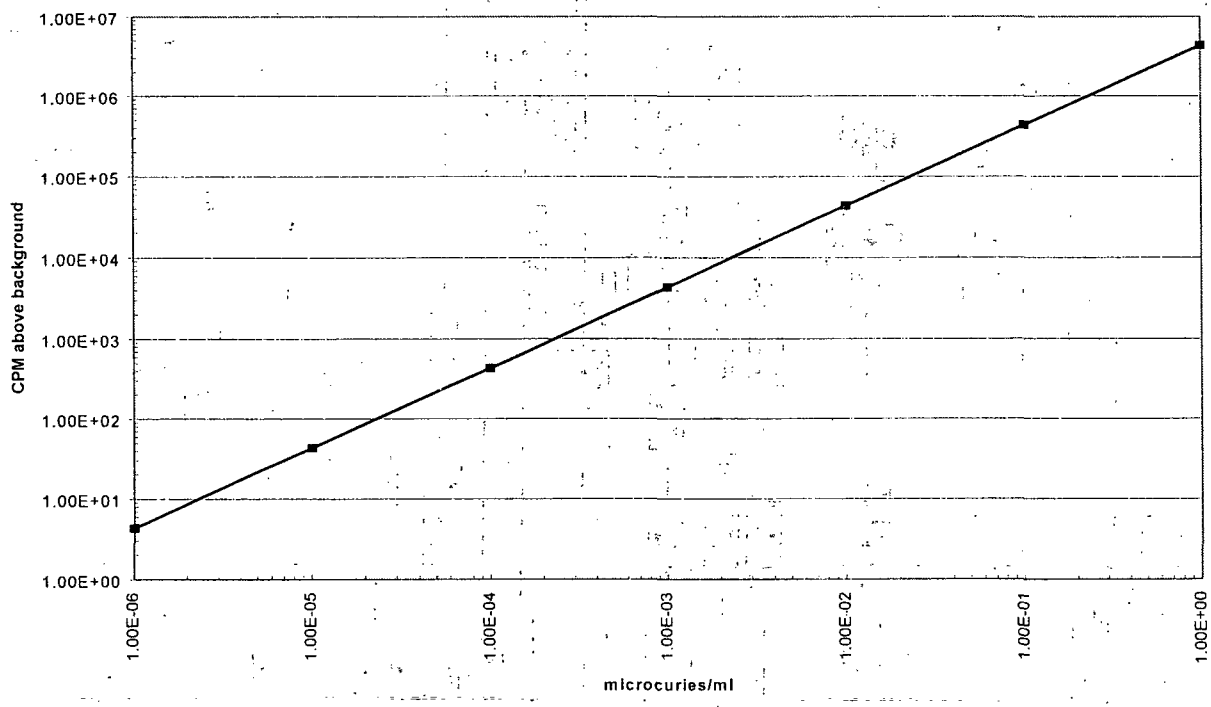

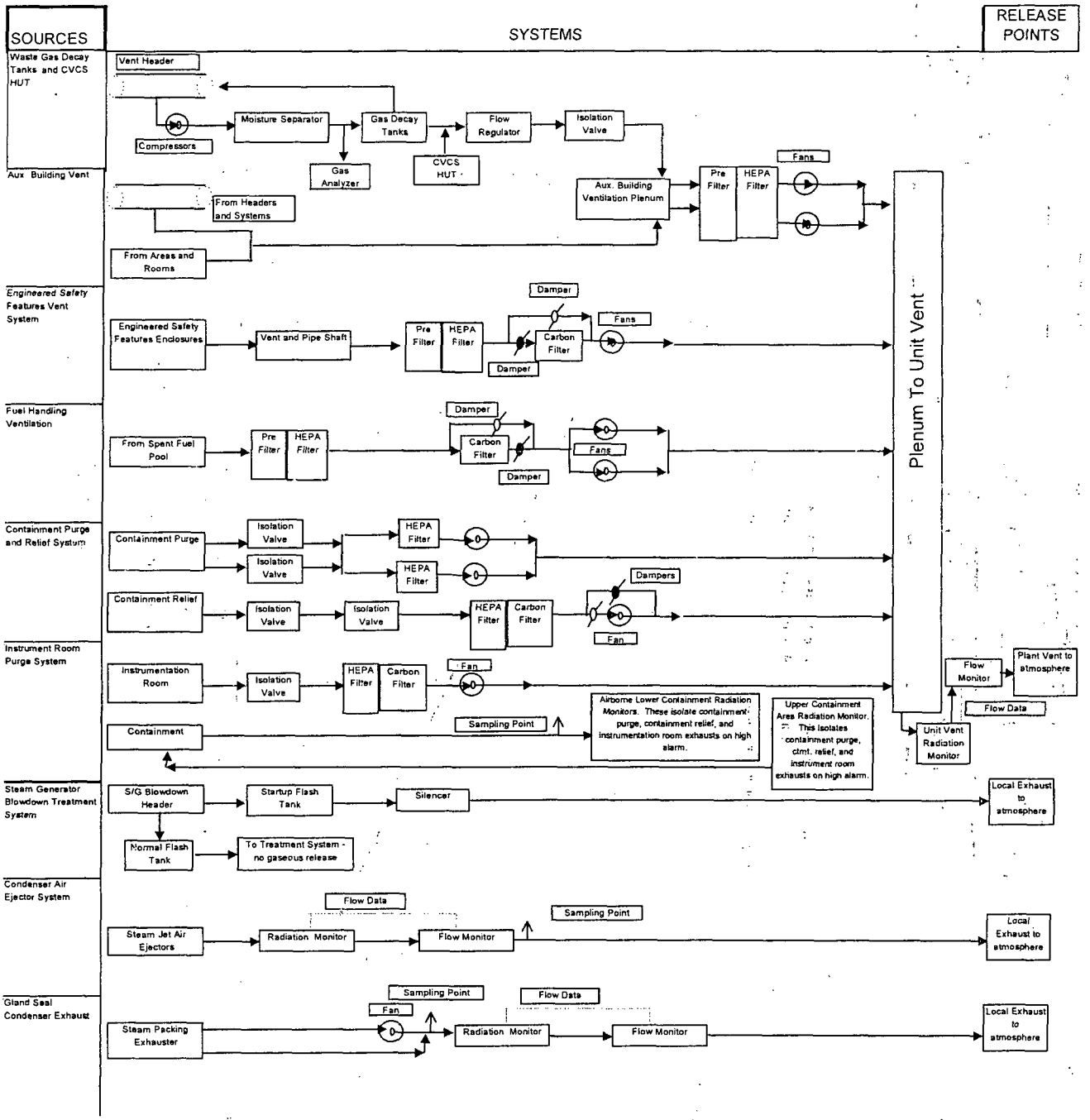
SOURCES
SYSTEMS
RELEASE POINTS
Waste Gas Decay Tanks and CVCS HUT
Vent Header
Compressors
Moisture Separator
Gas Decay Tanks
Flow Regulator
Isolation Valve
Gas Analyzer
CVCS HUT
Aux. Building Vent
From Headers and Systems
From Areas and Rooms
Aux. Building Ventilation Plenum
Pre Filter
HEPA Filter
Fans
Engineered Safety Features Vent System
Engineered Safety Features Enclosures
Vent and Pipe Shaft
Damper
Carbon Filter
Fuel Handling Ventilation
From Spent Fuel Pool
Containment Purge and Relief System
Containment Purge
Isolation Valve
Containment Relief
Dampers
Fan
Instrument Room Purge System
Instrumentation Room
Containment
Sampling Point
Airborne Lower Containment Radiation Monitors. These isolate containment purge, containment relief, and instrumentation room exhausts on high alarm.
Upper Containment Area Radiation Monitor. This isolates containment purge, ctmt. relief, and instrument room exhausts on high alarm.
Plenum To Unit Vent
Flow Monitor
Plant Vent to atmosphere
Flow Data
Unit Vent Radiation Monitor
Steam Generator Blowdown Treatment System
S/G Blowdown Header
Startup Flash Tank
Silencer
Local Exhaust to atmosphere
Normal Flash Tank
To Treatment System - no gaseous release
Condenser Air Ejector System
Steam Jet Air Ejectors
Radiation Monitor
Gland Seal Condenser Exhaust
Steam Packing Exhauster

SYSTEM	UNIT	EXHAUST FLOW RATE (CFM)	CAPACITY
I PLANT AUXILIARY BUILDING UNIT VENT	1 2	186,600 max 143,400 max	
WASTE GAS DECAY TANKS (8) AND CHEMICAL & VOLUME CONTROL SYSTEM HOLD UP TANKS (3)	1	125	4082 FT^3 @100 psig 28,741 ft^3 max @ 8#, 0 level
+ AUXILIARY BUILDING EXHAUST	1 2	72,660 59,400	
+ ENG. SAFETY FEATURES VENT	1 & 2	50,000	
+ FUEL HANDLING AREA VENT SYSTEM	1	30,000	
CONTAINMENT PURGE SYSTEM	1 & 2	32,000	
CONTAINMENT PRESSURE RELIEF SYSTEM	1 & 2	1,000	
INSTRUMENT ROOM PURGE SYSTEM	1 & 2	1,000	
II CONDENSER AIR EJECTOR SYSTEM			2 Release Points One for Each Unit
NORMAL STEAM JET AIR EJECTORS	1 & 2	230	
START UP STEAM JET AIR EJECTORS	1 & 2	3,600	
III TURBINE SEALS SYSTEM	1	1,260	
	2	5,508	2 Release Points for Unit 2
IV START UP FLASH TANK VENT	1	1,536	
	2	1,536	

+ Designates total flow for all fans.

$\overline{\chi/Q}$ GROUND AVERAGE (sec/m^3)

DIRECTION	DISTANCE (METERS)				
(WIND FROM)	594	2416	4020	5630	7240
N	4.17E-06	4.82E-07	2.25E-07	1.33E-07	9.32E-08
NNE	3.02E-06	3.64E-07	1.73E-07	1.04E-07	7.29E-08
NE	4.54E-06	5.31E-07	2.60E-07	1.59E-07	1.13E-07
ENE	7.16E-06	7.99E-07	4.04E-07	2.52E-07	1.80E-07
E	1.04E-05	1.13E-06	5.82E-07	3.66E-07	2.63E-07
ESE	1.07E-05	1.18E-06	6.04E-07	3.78E-07	2.72E-07
SE	1.15E-05	1.24E-06	6.36E-07	4.00E-07	2.88E-07
SSE	1.30E-05	1.42E-06	7.27E-07	4.57E-07	3.29E-07
S	1.41E-05	1.57E-06	7.92E-07	4.93E-07	3.54E-07
SSW	7.03E-06	7.81E-07	3.90E-07	2.41E-07	1.72E-07
SW	4.12E-06	4.73E-07	2.28E-07	1.38E-07	9.73E-08
WSW	3.29E-06	3.65E-07	1.76E-07	1.06E-07	7.52E-08
W	3.63E-06	4.11E-07	1.96E-07	1.18E-07	8.31E-08
WNW	3.02E-06	3.43E-07	1.61E-07	9.59E-08	6.71E-08
NW	3.22E-06	3.61E-07	1.71E-07	1.02E-07	7.16E-08
NNW	3.84E-06	4.29E-07	2.02E-07	1.20E-07	8.40E-08

DIRECTION	DISTANCE (METERS)				
(WIND FROM)	12067	24135	40225	56315	80500
N	4.64E-08	1.79E-08	8.89E-09	5.68E-09	3.56E-09
NNE	3.66E-08	1.43E-08	7.13E-09	4.56E-09	2.87E-09
NE	5.75E-08	2.30E-08	1.15E-08	7.41E-09	4.72E-09
ENE	9.30E-08	3.80E-08	1.91E-08	1.23E-08	7.90E-09
E	1.37E-07	5.65E-08	2.85E-08	1.83E-08	1.18E-08
ESE	1.41E-07	5.81E-08	2.93E-08	1.88E-08	1.22E-08
SE	1.50E-07	6.20E-08	3.12E-08	2.01E-08	1.30E-08
SSE	1.71E-07	7.06E-08	3.56E-08	2.29E-08	1.48E-08
S	1.84E-07	7.49E-08	3.77E-08	2.43E-08	1.56E-08
SSW	8.86E-08	3.59E-08	1.80E-08	1.15E-08	7.39E-09
SW	4.93E-08	1.96E-08	9.77E-09	6.27E-09	3.98E-09
WSW	3.80E-08	1.51E-08	7.53E-09	4.83E-09	3.07E-09
W	4.17E-08	1.64E-08	8.13E-09	5.20E-09	3.28E-09
WNW	3.34E-08	1.29E-08	6.41E-09	4.10E-09	2.57E-09
NW	3.57E-08	1.39E-08	6.89E-09	4.41E-09	2.77E-09
NNW	4.19E-08	3.35E-08	8.10E-09	5.19E-09	3.27E-09

DIRECTION TO - SECTOR			
N = A	E = E	S = J	W = N
NNE = B	ESE = F	SSW = K	WNW = P
NE = C	SE = G	SW = L	NW = Q
ENE = D	SSE = H	WSW = M	NNW = R

Worst Case $\overline{\chi/Q}$ = 2.04E-05 sec/m^3 in Sector H 2004

D/Q DEPOSITION ($1/m^2$)

DIRECTION (WIND FROM)	DISTANCE (METERS) 594	2416	4020	5630	7240
N	2.37E-08	2.29E-09	1.04E-09	5.44E-10	3.47E-10
NNE	9.86E-09	9.52E-10	4.32E-10	2.27E-10	1.45E-10
NE	1.29E-08	1.25E-09	5.67E-10	2.97E-10	1.90E-10
ENE	1.59E-08	1.54E-09	6.97E-10	3.66E-10	2.33E-10
E	1.87E-08	1.81E-09	8.20E-10	4.30E-10	2.75E-10
ESE	1.85E-08	1.79E-09	8.12E-10	4.26E-10	2.72E-10
SE	1.90E-08	1.83E-09	8.30E-10	4.36E-10	2.78E-10
SSE	2.40E-08	2.32E-09	1.05E-09	5.52E-10	3.52E-10
S	3.68E-08	3.56E-09	1.61E-09	8.46E-10	5.40E-10
SSW	2.30E-08	2.22E-09	1.01E-09	5.28E-10	3.37E-10
SW	2.22E-08	2.15E-09	9.74E-10	5.11E-10	3.26E-10
WSW	2.11E-08	2.04E-09	9.23E-10	4.84E-10	3.09E-10
W	2.00E-08	1.93E-09	8.74E-10	4.59E-10	2.93E-10
WNW	1.75E-08	1.69E-09	7.64E-10	4.01E-10	2.56E-10
NW	1.58E-08	1.53E-09	6.94E-10	3.64E-10	2.32E-10
NNW	2.30E-08	2.22E-09	1.01E-09	5.28E-10	3.37E-10

DIRECTION (WIND FROM)	DISTANCE (METERS) 12067	24135	40225	56315	80500
N	1.45E-10	4.72E-11	1.74E-11	9.27E-12	4.65E-12
NNE	6.36E-11	1.97E-11	7.24E-12	3.86E-12	1.94E-12
NE	8.07E-11	2.58E-11	9.51E-12	5.07E-12	2.54E-12
ENE	9.77E-11	3.17E-11	1.17E-11	6.23E-12	3.13E-12
E	1.14E-10	3.73E-11	1.37E-11	7.34E-12	3.68E-12
ESE	1.13E-10	3.70E-11	1.36E-11	7.26E-12	3.64E-12
SE	1.16E-10	3.78E-11	1.39E-11	7.42E-12	3.72E-12
SSE	1.47E-10	4.79E-11	1.76E-11	9.41E-12	4.72E-12
S	2.25E-10	7.34E-11	2.70E-11	1.44E-11	7.23E-12
SSW	1.41E-10	4.59E-11	1.69E-11	9.01E-12	4.52E-12
SW	1.36E-10	4.43E-11	1.63E-11	8.71E-12	4.37E-12
WSW	1.29E-10	4.20E-11	1.55E-11	8.26E-12	4.14E-12
W	1.22E-10	3.98E-11	1.47E-11	7.82E-12	3.92E-12
WNW	1.07E-10	3.48E-11	1.28E-11	6.84E-12	3.43E-12
NW	9.70E-11	3.16E-11	1.16E-11	6.20E-12	3.11E-12
NNW	1.41E-10	4.58E-11	1.69E-11	9.00E-12	4.52E-12

DIRECTION TO - SECTOR			
N = A	E = E	S = J	W = N
NNE = B	ESE = F	SSW = K	WNW = P
NE = C	SE = G	SW = L	NW = Q
ENE = D	SSE = H	WSW = M	NNW = R

Worst Case D/Q = 4.46E-08 $1/m^2$ in Sector A 2001

1. Performed or received annual update of $\overline{\chi/Q}$ and $\overline{D/Q}$ values. Provide a description of what has been received.

_____ /
Signature Date

_____
Environmental Department
(print name, title)

2. Worst $\overline{\chi/Q}$ and $\overline{D/Q}$ value and sector determined. PMP-6010-OSD-001 has been updated, if necessary. Provide an evaluation.

_____ /
Signature Date

_____
Environmental Department
(print name, title)

3. Review nuclide mix for gaseous and liquid release paths to determine if the dose conversion factor of total body is still applicable. Provide an evaluation.

_____ /
Signature Date

_____
Environmental Department
(print name, title)

4. Approved and verified by:

_____ /
Signature Date

_____
Environmental Department
(print name, title)

5. Copy to NS&A for information.

_____ /
Signature Date

_____
Environmental Department
(print name, title)

DOSE FACTORS FOR NOBLE GASES AND DAUGHTERS*

RADIONUCLIDE	TOTAL BODY DOSE FACTOR K_i (DFB_i) mrem m³ per μCi yr)	SKIN DOSE FACTOR L_i (DFS_i) (mrem m³ per μCi yr)	GAMMA AIR DOSE FACTOR M_i (DF^{γ}_i) (mrad m³ per μCi yr)	BETA AIR DOSE FACTOR N_i (DF^{β}_i) (mrad m³ per μCi yr)
Kr-83m	7.56E-02	------	1.93E+01	2.88E+02
Kr-85m	1.17E+03	1.46E+03	1.23E+03	1.97E+03
Kr-85	1.61E+01	1.34E+03	1.72E+01	1.95E+03
Kr-87	5.92E+03	9.73E+03	6.17E+03	1.03E+04
Kr-88	1.47E+04	2.37E+03	1.52E+04	2.93E+03
Kr-89	1.66E+04	1.01E+04	1.73E+04	1.06E+04
Kr-90	1.56E+04	7.29E+03	1.63E+04	7.83E+03
Xe-131m	9.15E+01	4.76E+02	1.56E+02	1.11E+03
Xe-133m	2.51E+02	9.94E+02	3.27E+02	1.48E+03
Xe-133	2.94E+02	3.06E+02	3.53E+02	1.05E+03
Xe-135m	3.12E+03	7.11E+02	3.36E+03	7.39E+02
Xe-135	1.81E+03	1.86E+03	1.92E+03	2.46E+03
Xe-137	1.42E+03	1.22E+04	1.51E+03	1.27E+04
Xe-138	8.83E+03	4.13E+03	9.21E+03	4.75E+03
Ar-41	8.84E+03	2.69E+03	9.30E+03	3.28E+03

* The listed dose factors are for radionuclides that may be detected in gaseous effluents, from Reg. Guide 1.109, Table B-1.

DOSE FACTORS FOR RADIOIODINES AND RADIOACTIVE PARTICULATE, IN GASEOUS EFFLUENTS FOR CHILD* Ref. 5.2.1ee and ff

RADIONUCLIDE	P_i INHALATION PATHWAY (mrem m³ per μCi yr)	P_i FOOD & GROUND PATHWAY (mrem m² sec per μCi yr)
H-3	1.12E+03	1.57E+03 #
P-32	2.60E+06	7.76E+10
Cr-51	1.70E+04	1.20E+07
Mn-54	1.58E+06	1.12E+09
Fe-59	1.27E+06	5.92E+08
Co-58	1.11E+06	5.97E+08
Co-60	7.07E+06	4.63E+09
Zn-65	9.95E+05	1.17E+10
Rb-86	1.98E+05	8.78E+09
Sr-89	2.16E+06	6.62E+09
Sr-90	1.01E+08	1.12E+11
Y-91	2.63E+06	6.72E+06
Zr-95	2.23E+06	3.44E+08
Nb-95	6.14E+05	4.24E+08
Ru-103	6.62E+05	1.55E+08
Ru-106	1.43E+07	3.01E+08
Ag-110m	5.48E+06	1.99E+10
I-131	1.62E+07	4.34E+11
I-132	1.94E+05	1.78E+06
I-133	3.85E+06	3.95E+09
I-135	7.92E+05	1.22E+07
Cs-134	1.01E+06	4.00E+10
Cs-136	1.71E+05	3.00E+09
Cs-137	9.07E+05	3.34E+10
Ba-140	1.74E+06	1.46E+08
Ce-141	5.44E+05	3.31E+07
Ce-144	1.20E+07	1.91E+08

*As Sr-90, Ru-106 and I-131 analyses are performed, THEN use P_i given in P-32 for nonlisted radionuclides.

The units for both H3 factors are the same, mrem m³ per μCi yr

Attachment 3.19	Radiological Environmental Monitoring Program Sample Stations, Sample Types, Sample Frequencies	Pages: 80 - 83

[Ref. 5.2.1v, 5.2.1x, 5.2.1t]

SAMPLE STATION	DESCRIPTION/ LOCATION	SAMPLE TYPE	SAMPLE FREQUENCY	ANALYSIS TYPE	ANALYSIS FREQUENCY
ON-SITE AIRBORNE AND DIRECT RADIATION (TLD) STATIONS					
ONS-1 (T-1)	1945 ft @ 18° from Plant Axis	Airborne Particulate	Weekly	Gross Beta	Weekly
				Gamma Isotopic	Quart. Comp.
		Airborne Radioiodine		I-131	Weekly
		TLD	Quarterly	Direct Radiation	Quarterly
ONS-2 (T-2)	2338 ft @ 48° from Plant Axis	Airborne Particulate	Weekly	Gross Beta	Weekly
				Gamma Isotopic	Quart. Comp.
		Airborne Radioiodine		I-131	Weekly
		TLD	Quarterly	Direct Radiation	Quarterly
ONS-3 (T-3)	2407 ft @ 90° from Plant Axis	Airborne Particulate	Weekly	Gross Beta	Weekly
				Gamma Isotopic	Quart. Comp.
		Airborne Radioiodine		I-131	Weekly
		TLD	Quarterly	Direct Radiation	Quarterly
ONS-4 (T-4)	1852 ft. @ 118° from Plant Axis	Airborne Particulate	Weekly	Gross Beta	Weekly
				Gamma Isotopic	Quart. Comp.
		Airborne Radioiodine		I-131	Weekly
		TLD	Quarterly	Direct Radiation	Quarterly
ONS-5 (T-5)	1895 ft @ 189° from Plant Axis	Airborne Particulate	Weekly	Gross Beta	Weekly
				Gamma Isotopic	Quart. Comp.
		Airborne Radioiodine		I-131	Weekly
		TLD	Quarterly	Direct Radiation	Quarterly
ONS-6 (T-6)	1917 ft @ 210° from Plant Axis	Airborne Particulate	Weekly	Gross Beta	Weekly
				Gamma Isotopic	Quart. Comp.
		Airborne Radioiodine		I-131	Weekly
		TLD	Quarterly	Direct Radiation	Quarterly
T-7	2103 ft @ 36° from Plant Axis	TLD	Quarterly	Direct Radiation	Quarterly
T-8	2208 ft @ 82° from Plant Axis	TLD	Quarterly	Direct Radiation	Quarterly
T-9	1368 ft @ 149° from Plant Axis	TLD	Quarterly	Direct Radiation	Quarterly
T-10	1390 ft @ 127° from Plant Axis	TLD	Quarterly	Direct Radiation	Quarterly
T-11	1969 ft @ 11° from Plant Axis	TLD	Quarterly	Direct Radiation	Quarterly
T-12	2292 ft @ 63° from Plant Axis	TLD	Quarterly	Direct Radiation	Quarterly

CONTROL AIRBORNE AND DIRECT RADIATION (TLD) STATIONS					
NBF	15.6 miles SSW New Buffalo, MI	Airborne Particulate	Weekly	Gross Beta	Weekly
				Gamma Isotopic	Quart. Comp.
		Airborne Radioiodine		I-131	Weekly
		TLD	Quarterly	Direct Radiation	Quarterly
SBN	26.2 miles SE South Bend, IN	Airborne Particulate	Weekly	Gross Beta	Weekly
				Gamma Isotopic	Quart. Comp.
		Airborne Radioiodine		I-131	Weekly
		TLD	Quarterly	Direct Radiation	Quarterly
DOW	24.3 miles ENE Dowagiac, MI	Airborne Particulate	Weekly	Gross Beta	Weekly
				Gamma Isotopic	Quart. Comp.
		Airborne Radioiodine		I-131	Weekly
		TLD	Quarterly	Direct Radiation	Quarterly
COL	18.9 miles NNE Coloma, MI	Airborne Particulate	Weekly	Gross Beta	Weekly
				Gamma Isotopic	Quart. Comp.
		Airborne Radioiodine		I-131	Weekly
		TLD	Quarterly	Direct Radiation	Quarterly

SAMPLE STATION	DESCRIPTION/ LOCATION	SAMPLE TYPE	SAMPLE FREQUENCY	ANALYSIS TYPE	ANALYSIS FREQUENCY
OFF-SITE DIRECT RADIATION (TLD) STATIONS					
OFT-1	4.5 miles NE, Pole #B294-44	TLD	Quarterly	Direct Radiation	Quarterly
OFT-2	3.6 miles, NE, Stevensville Substation	TLD	Quarterly	Direct Radiation	Quarterly
OFT-3	5.1 miles NE, Pole #B296-13	TLD	Quarterly	Direct Radiation	Quarterly
OFT-4	4.1 miles, E, Pole #B350-72	TLD	Quarterly	Direct Radiation	Quarterly
OFT-5	4.2 miles ESE, Pole #B387-32	TLD	Quarterly	Direct Radiation	Quarterly
OFT-6	4.9 miles SE, Pole #B426-1	TLD	Quarterly	Direct Radiation	Quarterly
OFT-7	2.5 miles S, Bridgman Substation	TLD	Quarterly	Direct Radiation	Quarterly
OFT-8	4.0 miles S, Pole #B424-20	TLD	Quarterly	Direct Radiation	Quarterly
OFT-9	4.4 miles ESE, Pole #B369-214	TLD	Quarterly	Direct Radiation	Quarterly
OFT-10	3.8 miles S, Pole #B422-99	TLD	Quarterly	Direct Radiation	Quarterly
OFT-11	3.8 miles S, Pole #B423-12	TLD	Quarterly	Direct Radiation	Quarterly
GROUNDWATER (WELL WATER) SAMPLE STATIONS					
W-1	1969 ft @ 11° from Plant Axis	Groundwater	Quarterly	Gamma Isotopic	Quarterly
				Tritium	Quarterly
W-2	2302 ft @ 63° from Plant Axis	Groundwater	Quarterly	Gamma Isotopic	Quarterly
				Tritium	Quarterly
W-3	3279 ft @ 107° from Plant Axis	Groundwater	Quarterly	Gamma Isotopic	Quarterly
				Tritium	Quarterly
W-4	418 ft @ 301° from Plant Axis	Groundwater	Quarterly	Gamma Isotopic	Quarterly
				Tritium	Quarterly
W-5	404 ft @ 290° from Plant Axis	Groundwater	Quarterly	Gamma Isotopic	Quarterly
				Tritium	Quarterly
W-6	424 ft @ 273° from Plant Axis	Groundwater	Quarterly	Gamma Isotopic	Quarterly
				Tritium	Quarterly
W-7	1895 ft @ 189° from Plant Axis	Groundwater	Quarterly	Gamma Isotopic	Quarterly
				Tritium	Quarterly
W-8	1274 ft @ 54° from Plant Axis	Groundwater	Quarterly	Gamma Isotopic	Quarterly
				Tritium	Quarterly
W-9	1447 ft @ 22° from Plant Axis	Groundwater	Quarterly	Gamma Isotopic	Quarterly
				Tritium	Quarterly
W-10	4216 ft @ 129° from Plant Axis	Groundwater	Quarterly	Gamma Isotopic	Quarterly
				Tritium	Quarterly
W-11	3206 ft @ 153° from Plant Axis	Groundwater	Quarterly	Gamma Isotopic	Quarterly
				Tritium	Quarterly
W-12	2631 ft @ 162° from Plant Axis	Groundwater	Quarterly	Gamma Isotopic	Quarterly
				Tritium	Quarterly
W-13	2152 ft @ 182° from Plant Axis	Groundwater	Quarterly	Gamma Isotopic	Quarterly
				Tritium	Quarterly
W-14	1780 ft @ 164° from Plant Axis	Groundwater	Quarterly	Gamma Isotopic	Quarterly
				Tritium	Quarterly
W-15	725 ft @ 202° from Plant Axis NPDES well MW-12C	Groundwater	Quarterly	Gamma Isotopic	Quarterly
				Tritium	Quarterly
DRINKING WATER					
STJ	St. Joseph Public Intake Sta. 9 mi. NE	Drinking water	Once per calendar Day	Gross Beta	14 day Comp.
				Gamma Isotopic	14 day Comp.
				I-131	14 day Comp.
				Tritium	Quart. Comp.
LTW	Lake Twp. Public Intake Sta. 0.6 mi. S	Drinking water	Once per calendar Day	Gross Beta	14 day Comp.
				Gamma Isotopic	14 day Comp.
				I-131	14 day Comp.
				Tritium	Quart. Comp

SAMPLE STATION	DESCRIPTION/ LOCATION	SAMPLE TYPE	SAMPLE FREQUENCY	ANALYSIS TYPE	ANALYSIS FREQUENCY
SURFACE WATER					
SWL-2	Plant Site Boundary - South ~ 500 ft. south of Plant Centerline	Surface Water	Once per calendar Day	Gamma Isotopic	Month. Comp.
				Tritium	Quart. Comp
SWL-3	Plant Site Boundary - North ~ 500 ft. north of Plant Centerline	Surface Water	Once per calendar Day	Gamma Isotopic	Month. Comp.
				Tritium	Quart. Comp.
SEDIMENT					
SL-2	Plant Site Boundary - South ~ 500 ft. south of Plant Centerline	Sediment	Semi-Ann.	Gamma Isotopic	Semi-Annual
SL-3	Plant Site Boundary - North ~ 500 ft. north of Plant Centerline	Sediment	Semi-Ann.	Gamma Isotopic	Semi-Annual
INGESTION - MILK Indicator Farms*					
		Milk	Once every 15 days	I-131	per sample
				Gamma Isotopic	per sample
		Milk	Once every 15 days	I-131	per sample
				Gamma Isotopic	per sample
		Milk	Once every 15 days	I-131	per sample
				Gamma Isotopic	per sample
INGESTION - MILK Background Farms*					
		Milk	Once every 15 days	I-131	per sample
				Gamma Isotopic	per sample
		Milk	Once every 15 days	I-131	per sample
				Gamma Isotopic	per sample

SAMPLE STATION	DESCRIPTION/ LOCATION	SAMPLE TYPE	SAMPLE FREQUENCY	ANALYSIS TYPE	ANALYSIS FREQUENCY
INGESTION - FISH					
ONS-N	0.3 mile N, Lake Michigan	Fish - edible portion	2/year	Gamma Isotopic	per sample
ONS-S	0.4 mile S, Lake Michigan	Fish - edible portion	2/year	Gamma Isotopic	per sample
OFS-N	3.5 mile N, Lake Michigan	Fish - edible portion	2/year	Gamma Isotopic	per sample
OFS-S	5.0 mile S, Lake Michigan	Fish - edible portion	2/year	Gamma Isotopic	per sample

INGESTION - FOOD PRODUCTS					
On Site					
ONS-G	Nearest sample to Plant in the highest D/Q land sector containing media.	Grapes	At time of harvest	Gamma Isotopic	At time of harvest
ONS-V		Broadleaf vegetation	At time of harvest	Gamma Isotopic	At time of harvest
Off Site					
OFS-G	In a land sector containing grapes, approximately 20 miles from the plant, in one of the less prevalent D/Q land sectors	Grapes	At time of harvest	Gamma Isotopic	At time of Harvest
OFS-V		Broadleaf vegetation	At time of harvest	Gamma Isotopic	At time of harvest

INGESTION - BROADLEAF IN LIEU OF MILK				
3 indicator samples of broad leaf vegetation collected at different locations, within eight miles of the plant in the highest annual average D/Q land sector.	Broadleaf vegetation	Monthly when available	Gamma Isotopic I131	Monthly when available
1 background sample of similar vegetation grown 15-25 miles distant in one of the less prevalent wind directions.	Broadleaf vegetation	Monthly when available	Gamma Isotopic I131	Monthly when available

Collect composite samples of Drinking and Surface water at least daily. Analyze particulate sample filters for gross beta activity 24 or more hours following filter removal. This will allow for radon and thoron daughter decay. If gross beta activity in air or water is greater than 10 times the yearly mean of control samples for any medium, perform gamma isotopic analysis on the individual samples.

If at least three indicator milk samples and one background milk sample cannot be obtained, three indicator broad leaf samples will be collected at different locations, within eight miles of the plant, in the land sector with the highest D/Q (refers to the highest annual average D/Q). Also, one background broad leaf sample will be collected 15 to 25 miles from the plant in one of the less prevalent D/Q land sectors.

* The three milk indicator and two background farms will be determined by the Annual Land Use Census and those that are willing to participate.. **IF** it is determined that the milk animals are fed stored feed, **THEN** monthly sampling is appropriate for that time period.

[Ref. 5.2.1v]

Radionuclides	Food Product ρCi/kg, wet	Water ρCi/l	Milk ρCi/l	Air Filter ρCi/m^3	Fish ρCi/kg, wet	Sediment ρCi/kg, dry
Gross Beta		4*		0.01		
H-3		2000				
Ba-140		60	60			
La-140		15	15			
Cs-134	60	15	15	0.06	130	150
Cs-137	60	18	18	0.06	150	180
Zr-95		30				
Nb-95		15				
Mn-54		15			130	
Fe-59		30			260	
Zn-65		30			260	
Co-58		15			130	
Co-60		15			130	
I-131	60	1	1	0.07		

This Data is directly from our plant-specific Technical Specification.

* LLD for drinking water

NOTES

A. The Lower Limit of Detection (LLD) is defined as the smallest concentration of radioactive material in a sample that will be detected with 95% probability and 5% probability of falsely concluding that a blank observation represents a "real" signal.

For a particular measurement system (which may include radiochemical separation), the LLD is given by the equation:

$$LLD = \frac{4.66^{a} * S}{E * V * 2.22 * Y * e^{(-\lambda * \Delta t)}}$$

Where LLD is the a priori lower limit of detection as defined above (as pCi per unit mass or volume). Perform analysis in such a manner that the stated LLDs will be achieved under routine conditions. Occasionally background fluctuations, unavoidably small sample sizes, the presence of interfering radionuclides, or other uncontrollable circumstances may render these LLDs unachievable. It should be further clarified that the LLD represents the capability of a measurement system and not as an after the fact limit for a particular measurement.

S is the standard deviation of the background counting rate or of the counting rate of a blank sample as appropriate (as counts per minute).

E is the counting efficiency of the detection equipment as counts per transformation (that is, disintegration)

V is the sample size in appropriate mass or volume units

2.22 is the conversion factor from picocuries (pCi) to transformations (disintegrations) per minute

Y is the fractional radiochemical yield as appropriate

λ is the radioactive decay constant for the particular radionuclide

Δt is the elapsed time between the midpoint of sample collection (or end of sample collection period) and time of counting.

B. Identify and report other peaks which are measurable and identifiable, together with the radionuclides listed in Attachment 3.20, Maximum Values for Lower Limits of DetectionsA,B - REMP.

α A 2.71 value may be added to the equation to provide correction for deviations in the Poisson distribution at low count rates, that is, 2.71 + 4.66 x S.

Radionuclides	Food Product pCi/kg, wet	Water pCi/l	Milk pCi/l	Air Filter pCi/m^3	Fish pCi/kg, wet
H-3		20000			
Ba-140		200	300		
La-140		200	300		
Cs-134	1000	30	60	10	1000
Cs-137	2000	50	70	20	2000
Zr-95		400			
Nb-95		400			
Mn-54		1000			30000
Fe-59		400			10000
Zn-65		300			20000
Co-58		1000			30000
Co-60		300			10000
I-131	100	2	3	0.90	

IF any of the above concentration levels are exceeded **THEN** see guidance contained in step 3.5.2a. for additional information.

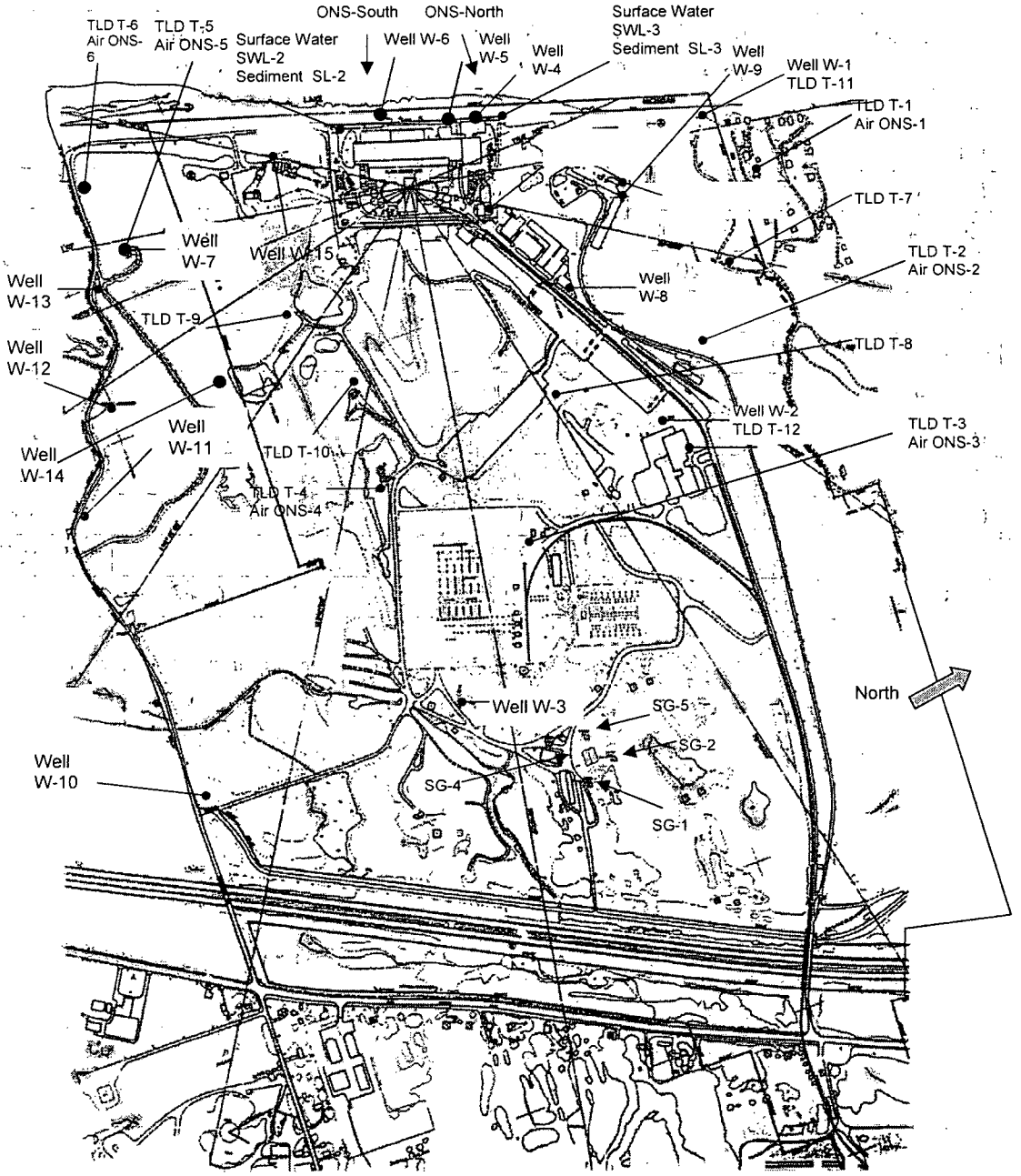

LEGEND

ONS-1 – ONS-6: Air Sampling Station
T-1 – T-12: TLD Sampling Station
W-1 – W-15: REMP Groundwater Wells
SWL- 2, 3: Surface Water Sampling Stations
SL-2 SL-3: Sediment Sampling Stations
ONS-N & S: Fish sampling locations
SG-1, 2, 4 and 5: Non REMP information Wells

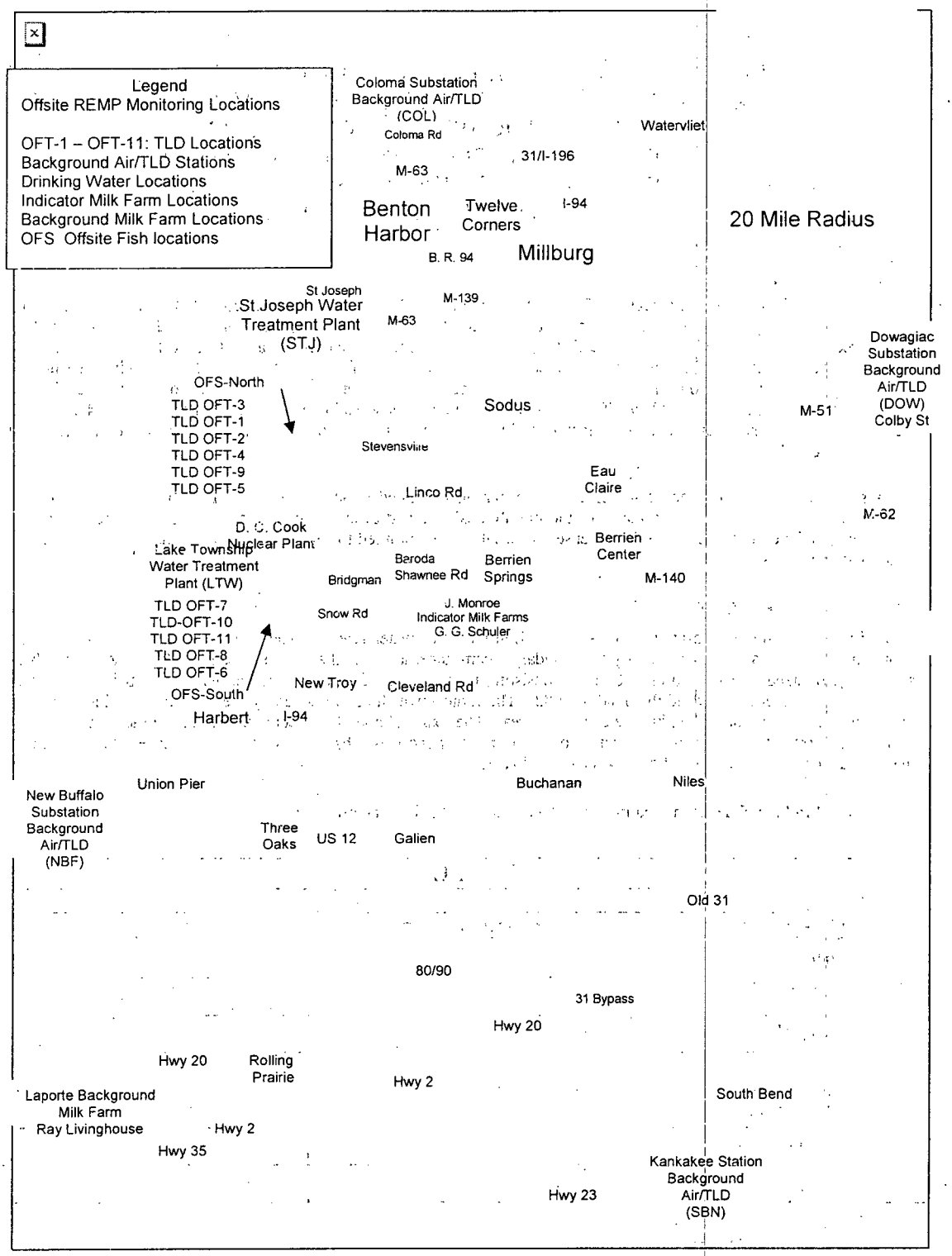
Legend
Offsite REMP Monitoring Locations
OFT-1 – OFT-11: TLD Locations
Background Air/TLD Stations
Drinking Water Locations
Indicator Milk Farm Locations
Background Milk Farm Locations
OFS Offsite Fish locations
Coloma Substation Background Air/TLD (COL)
Coloma Rd
Watervliet
31/I-196
M-63
Benton Harbor
Twelve Corners
I-94
20 Mile Radius
B. R. 94
Millburg
St Joseph
St Joseph Water Treatment Plant (STJ)
M-139
M-63
Dowagiac Substation Background Air/TLD (DOW)
Colby St
OFS-North
TLD OFT-3
TLD OFT-1
TLD OFT-2
TLD OFT-4
TLD OFT-9
TLD OFT-5
Sodus
M-51
Stevensville
Eau Claire
Linco Rd
M-62
D. C. Cook Nuclear Plant
Lake Township Water Treatment Plant (LTW)
Berrien Center
Baroda
Shawnee Rd
Berrien Springs
Bridgman
M-140
TLD OFT-7
TLD-OFT-10
TLD OFT-11
TLD OFT-8
TLD OFT-6
OFS-South
Snow Rd
J. Monroe Indicator Milk Farms
G. G. Schuler
New Troy
Cleveland Rd
Harbert
I-94
Union Pier
Buchanan
Niles
New Buffalo Substation Background Air/TLD (NBF)
Three Oaks
US 12
Galien
Old 31
80/90
31 Bypass
Hwy 20
Hwy 20
Rolling Prairie
Hwy 2
South Bend
Laporte Background Milk Farm
Ray Livinghouse
Hwy 2
Hwy 35
Kankakee Station Background Air/TLD (SBN)
Hwy 23

SAFETY EVALUATION BY THE OFFICE OF NUCLEAR REACTOR REGULATION RELATED TO DISPOSAL OF SLIGHTLY CONTAMINATED SLUDGE INDIANA MICHIGAN POWER COMPANY DONALD C. COOK NUCLEAR PLANT, UNIT NOS. 1 AND 2 DOCKET NOS. 50-315 AND 50-316 [Ref. 5.2.1r] (This is a 10 CFR 50.75 (g) item)

1. INTRODUCTION

By letters dated October 9, 1991, October 23, 1991, September 3, 1993, and September 29, 1993, Indiana Michigan Power Company (I&M) requested approval pursuant to 10 CFR 20.2002 for the on-site disposal of licensed material not previously considered in the Donald C. Cook Nuclear Plant Final Environmental Statement dated August 1973. Specifically, this request addresses actions taken in 1982 in which approximately 942 cubic meters of slightly contaminated sludge were removed from the turbine room sump absorption pond and pumped to the upper parking lot located within the exclusion area of the Donald C. Cook Nuclear Plant. The contaminated sludge was spread over an area of approximately 4.7 acres. The sludge contained a total radionuclide inventory of 8.89 millicuries (mCi) of Cesium-137, Cesium-136, Cesium-134, Cobalt-60 and Iodine-131.

In its submittal, the licensee addressed specific information requested in accordance with 10 CFR 20.2002(a), provided a detailed description of the licensed material, thoroughly analyzed and evaluated information pertinent to the impacts on the environment of the proposed disposal of licensed material, and committed to follow specific procedures to minimize the risk of unexpected exposures.

2. DESCRIPTION OF WASTE

The turbine room sump absorption pond is a collection place for water released from the plant's turbine room sump. The contamination was caused by a primary-to-secondary steam generator leak that entered the pond from the turbine building sump, a recognized release pathway. Sludge, consisting mainly of leaves and roots mixed with sand, built up in the pond. As a result, the licensee dredged the pond in 1982. The radioactive sludge removed by the dredging activities was pumped to a containment area located within the exclusion area. The total volume of 942 cubic meters of the radioactive sludge that was dredged from the bottom of the turbine room absorption pond was subsequently spread and made into a graveled road over the upper parking lot area of approximately 4.7 acres.

The principal radionuclides identified in the dredged material are listed below.

TABLE 1

NUCLIDE (half-life)	ACTIVITY (mCi) 1982	ACTIVITY (mCi) 1991
^{136}Cs (13.2 d)	0.03	NA*
^{134}Cs (2.1 y)	2.34	0.18
^{137}Cs (30.2 y)	5.59	4.57
^{60}Co (5.6 y)	0.90	0.27
^{131}I (8.04 d)	0.03	NA*
TOTAL:	8.89	5.02

* NA: not applicable due to decay.

3. RADIOLOGICAL IMPACTS

The licensee in 1982 evaluated the following potential exposure pathways to members of the general public from the radionuclides in the sludge:

(1) external exposure caused by groundshine from the disposal site;

(2) internal exposure caused by inhalation of re suspended radionuclide;
-AND-
(3) internal exposure from ingesting ground water.

The staff has reviewed the licensee's calculational methods and assumptions and finds that they are consistent with NUREG-1101, "Onsite Disposal of Radioactive Waste," Volumes 1 and 2, November 1986 and February 1987, respectively. The staff finds the assessment methodology acceptable. Table 2 lists the doses calculated by the licensee for the maximally exposed member of the public based on a total activity of 8.89 mCi disposed in that year.

TABLE 2

Pathway	Whole Body Dose Received by Maximally Exposed Individual (mrem/year)
Groundshine	0.94
Inhalation	0.94
Groundwater Ingestion	0.73
Total	2.61

On July 5, 1991, the licensee re-sampled the onsite disposal area to assure that no significant impacts and adverse effects had occurred. A counting procedure based on the appropriate environmental low-level doses was used by the licensee; however, no activity was detected during the re-sampling[1]. This is consistent with the original activity of the material and the decay time. The 1991 re-sampling process used by the licensee confirms that the environmental impact of the 1982 disposal was very small. The staff finds the licensee's methodology acceptable.

4. ENVIRONMENTAL FINDING AND CONCLUSION

The staff has evaluated the environmental impact of the proposal to leave in place approximately 942 cubic meters of slightly contaminated sludge underneath the upper parking lot on the Donald C. Cook Nuclear Plant site.

In 1982, the licensee evaluated the potential exposure to members of the general public from the radionuclides in the sludge and calculated the potential dose to the maximally exposed member of the public, based on a total activity of 8.89 mCi disposed in that year, to be 2.61 mrem/yr. The staff has reviewed the licensee's calculational methods and assumptions and found that they are consistent with NUREG-1101, Onsite Disposal of Radioactive Waste, Volumes 1 and 2, November 1986 and February 1987, respectively. The staff finds the assessment methodology acceptable. For comparison, the radiation from the naturally occurring radionuclides in soils and rocks plus cosmic radiation gives a person in Michigan a whole-body dose rate of about 89 mrem per year outdoors. Subsequent licensee sampling in 1991 identified no detectable activity. The staff evaluated the licensee's sampling and analysis methodology and finds it acceptable. The results, of the 1991 re-sampling by the licensee, confirm that the environmental impact of the 1982 disposal was very small.

Based on the above the staff finds that the potential environmental impacts of leaving the contaminated sludge in place are insignificant. With regard to the non-radiological impacts, the staff has determined that leaving the soil in place represents the least impact to the environment.

5. CONCLUSION

Based on the staff's review of the licensee's discussion, the staff finds the licensee's proposal to retain the material in its present location as documented in this Safety Evaluation acceptable. Also, this Safety Evaluation shall be permanently incorporated as an appendix to the licensee's Offsite Dose Calculation Manual (ODCM), and any future modifications shall be reported to NRC in accordance with the applicable ODCM change protocol.

---

[1] I&M letter from E. E. Fitzpatrick to the NRC Document Control Desk, September 29, 1993

Therefore, the licensee's proposal to consider the slightly contaminated sludge disposed by retention in place in the manner described in the Donald C. Cook Nuclear Plant submittals date October 9, 1991, October 23, 1991, September 3, 1993, and September 29, 1993, is acceptable.

The guidelines used by the NRC staff for onsite disposal of licensed material and the staff's evaluation of how each guideline has been satisfied are given in Table 3.

Pursuant to 10 CFR 51.32, the Commission has determined that granting of this approval will have no significant impact on the environment (October 31, 1994, 59 FR 54477).

Principal Contributor: J. Minns

Date: November 10, 1994

TABLE 3

20.2002 GUIDELINE FOR ONSITE DISPOSAL[2]	STAFF'S EVALUATION
1. The radioactive material should be disposed of in such a manner that it is unlikely that the material would be recycled.	1. Due to the nature of the disposed material, recycling to the general public is not considered likely.
2. Doses to the total body and any body organ of a maximally exposed individuals (a member of the general public or a non-occupationally exposed worker) from the probable pathways of exposure to the disposed material should be less than 1 mrem/year.	2. This guideline was addressed in Table 2. Although the 2.61 mrem/yr is greater than staff's guidelines, the staff finds it acceptable due to 9 yrs decay following analysis and the expected lack of activity detected in the 1991 survey.
3. Doses to the total body and any body organ of an inadvertent intruder from the probable pathways of exposure should be less than 5 mrem/year.	3. Because the material will be land-spread, the staff considers the maximally exposed individual scenario to also address the intruder scenario.
4. Doses to the total body and any body organ of an individual from assumed recycling of the disposed material at the time the disposal site is released from regulatory control from all likely pathways of exposure should be less than 1 mrem.	4. Even if recycling were to occur after release from regulatory control, the dose to a maximally exposed member of the public is not expected to exceed 1 mrem/year, based on exposure scenarios considered in this analysis.

---

[2] E. F. Branagan, Jr. and F. J. Congel, "Disposal of Contaminated Radioactive Wastes from Nuclear Power Plants," presented at the Health Physics Society's Mid-Year Symposium on Health Physics Consideration in Decontamination/Decommissioning, Knoxville, Tennessee, February 1986, (CONF-860203).