Calculation No. SC-SM-0001-1
Main Steam Line High Flow to NS4 Isolation Logic

(NC.DE-AP.ZZ-0002(Q), Rev. 12, Form 1) **CALCULATION COVER SHEET** Page 1 of 82

CALCULATION NUMBER: SC-SM-0001-1 **REVISION:** 9IR1

TITLE: MAIN STEAM LINE HIGH FLOW TO NS4 ISOLATION LOGIC

#SHTS (CALC): 82 **#ATT/#SHTS:** 9 / 48 **#IDV/50.59/72.48 SHTS:** 4 / 4 **#TOTAL SHTS:** 138

CHECK ONE:

☐ FINAL ☒ INTERIM (Proposed Plant Change) ☐ VOID

☐ FINAL (Future Confirmation Req'd, enter tracking Notification number:) _____

SALEM OR HOPE CREEK: ☒ Q – LIST ☐ IMPORTANT TO SAFETY ☐ NON-SAFETY RELATED

HOPE CREEK ONLY: ☒Q ☐Qs ☐Qsh ☐F ☐R

ISFSI: ☐ IMPORTANT TO SAFETY ☐ NOT IMPORTANT TO SAFETY

☒ ARE STATION PROCEDURES IMPACTED? YES ☒ NO ☐

IF "YES", INTERFACE WITH THE SYSTEM ENGINEER & PROCEDURE SPONSOR. ALL IMPACTED PROCEDURES SHOULD BE IDENTIFIED IN A SECTION IN THE CALCULATION BODY **[CRCA 70038194-0280]**. INCLUDE AN SAP OPERATION FOR UPDATE AND LIST THE SAP ORDERS HERE AND WITHIN THE BODY OF THIS CALCULATION.

☒ CP and ADs INCORPORATED (IF ANY): **80028591R4 (MCR Recorder Upgrade)**
80048085 AD I095R0

DESCRIPTION OF CALCULATION REVISION (If applicable.):

Rev. 9IR1: Interim Revision to revise the Acceptable Value to two sided Tolerance.
Rev. 9IR0 is an interim revision to support the Hope Creek Generating Station Extended Power Uprate.
Revision bars are not used due to the complete re-formating of this calculation.

PURPOSE:

Rev. 9IR0, 9IR1: This revision determines the new scaling for the 3840 MWt Extended Power Uprate, including the calculation of the new setpoint values. In addition, instrument loop uncertainties have been re-calculated. Process Measurement Effects and Primary Element Accuracy originally determined by GE have been re-calculated based on the higher flows. The Non-Safety Related Digital Feedwater Control System loops have been added to the scope of this calculation.

CONCLUSIONS:

Rev. 9IR1: Calculated Interim Margins are not affected by this revision
Rev. 9IR0: The upper range limit of the Safety Related transmitters is sufficient to accommodate the new spans; however, the Non-Safety Related DFCS transmitters will require replacement. Affected documents that require revision are listed in Section 9.5.

	Printed Name / Signature	Date
ORIGINATOR/COMPANY NAME:	Jerry Almonte/ Michael Richers / PSEG	03/19/2007
REVIEWER/COMPANY NAME:	Jim Metro / PSEG	03/21/2007
VERIFIER/COMPANY NAME:	Jim Metro / PSEG	03/21/2007
CONTRACTOR SUPERVISOR (If applicable)	N/A	
PSEG SUPERVISOR APPROVAL: (Always required)	Jack Carey / PSEG Jack Carey	3/26/07

ORIGINATOR:	DATE:	REVIEWER:	DATE:	VERIFIER:	DATE:
A. Shaul	12/2/05	B. Yu	12/2/05	B. Yu	12/2/05

COVER SHEET CONTINUATION

DESCRIPTION OF CALCULATION REVISION (CONT.):

Rev. 8: Added Sht. 1A & 4A of 31 and note per DCR 4EO-3208, Pkg 0, Rev. 0, CD I 509/0.
Rev. 7: Revised and re-formated in accordance with DE-TS.ZZ-1001Q
Rev. 6: Revised trip and reset actuation settings & correct calibration notes.
Rev. 5: Revised cal & recal tol. On sheet 8, 11 & 14
Rev. 4 Revised process calculation
Rev. 3: Incorporation ambient calibration with head correction & static pressure compensation
Rev. 2: Issued for OPS Surveillance Test – revised and re-formatted
Rev. 1: Issued for OPS Surv,Test only
Rev. 0: Final Calculation

REASON FOR CALCULATION REVISION (CONT.):

N/A

ORIGINATOR:	DATE:	REVIEWER:	DATE:	VERIFIER:	DATE:
J.Almonte / M. Richers	03/19/07	J. Metro	03/21/07	J. Metro	03/21/07

LIST OF EFFECTIVE PAGES

Page No.	Revision	Page No.	Revision	Page No.	Revision	Page No.	Revision
1	9IR1	41	9IR0	Attachment 10.1		Attachment 10.5	
2	9IR0	42	9IR0				
3	9IR1	43	9IR0	1	9IR0	1	9IR0
4	9IR0	44	9IR0	2	9IR0		
5	9IR0	45	9IR0	3	9IR0		
6	9IR0	46	9IR0	4	9IR0	Attachment 10.6	
7	9IR0	47	9IR0	5	9IR1		
8	9IR0	48	9IR0	6	9IR1	1	9IR0
9	9IR0	49	9IR0	7	9IR0		
10	9IR0	50	9IR0	8	9IR1		
11	9IR0	51	9IR0	9	9IR0		
12	9IR0	52	9IR0	10	9IR0	Attachment 10.7	
13	9IR0	53	9IR0	11	9IR0		
14	9IR0	54	9IR0	12	9IR0	1	9IR0
15	9IR0	55	9IR0	13	9IR0		
16	9IR0	56	9IR0	14	9IR0		
17	9IR0	57	9IR0	15	9IR0		
18	9IR0	58	9IR0	16	9IR0	Attachment 10.8	
19	9IR0	59	9IR0	17	9IR0		
20	9IR0	60	9IR0	18	9IR0	1	9IR0
21	9IR0	61	9IR0	19	9IR0	2	9IR0
22	9IR0	62	9IR0	20	9IR0	3	9IR0
23	9IR0	63	9IR0	21	9IR0	4	9IR0
24	9IR0	64	9IR0			5	9IR0
25	9IR0	65	9IR0	Attachment 10.2		6	9IR0
26	9IR0	66	9IR0	1	9IR0	7	9IR0
27	9IR0	67	9IR0			8	9IR0
28	9IR0	68	9IR0			9	9IR0
29	9IR0	69	9IR0	Attachment 10.3		10	9IR0
30	9IR0	70	9IR0	1	9IR0		
31	9IR0	71	9IR0	2	9IR0		
32	9IR0	72	9IR1	3	9IR0	Attachment 10.9	
33	9IR0	73	9IR0	4	9IR0		
34	9IR0	74	9IR0	5	9IR0	1	9IR0
35	9IR0	75	9IR0			2	9IR0
36	9IR0	76	9IR1	Attachment 10.4		3	9IR0
37	9IR0	77	9IR1	1	9IR0	4	9IR0
38	9IR0	78	9IR1	2	9IR0		
39	9IR0	79	9IR1	3	9IR0		
40	9IR0	80	9IR1	4	9IR0		
		81	9IR0				
		82	9IR0				

TABLE OF CONTENTS

CALCULATION COVER SHEET 1
LIST OF EFFECTIVE PAGES 3
1.0 PURPOSE/SCOPE 6
1.1 Purpose 6
1.2 Scope 6
2.0 FUNCTIONAL DESCRIPTION/DESIGN BASIS 8
2.1 Functional Description 8
2.2 Design Basis 8
3.0 REFERENCES 9
3.1 Updated Final Safety Analysis Report 9
3.2 Technical Specifications 9
3.3 Drawings 9
3.4 Support Documents 11
3.5 Procedures 13
4.0 LOOP DIAGRAM 16
5.0 DESIGN INPUTS 19
5.1 General Design Inputs 19
5.2 Design Inputs 22
6.0 ASSUMPTIONS 32
6.1 Insulation Resistance Error Assumptions 32
6.2 Computer Accuracy 32
6.3 Resistor Accuracy 32
6.4 Readability 32
7.0 UNCERTAINTIES 33
7.1 Primary Element Accuracy (PEA) 33
7.2 Process Measurement Accuracy (PMA) 35
7.3 Calculation of Transmitter Uncertainty (Safety Related) 39
7.4 Calculation of Trip Unit Uncertainty 44
7.5 Calculation of Transmitter Uncertainty (Non-Safety Related) 48
7.6 Calculation of Interface Module Uncertainty (Input) 53
7.7 Calculation of Interface Module Uncertainty (Output) 55
7.8 Calculation of Indicator Uncertainty 57
7.9 Calculation of Recorder Uncertainty 60
7.10 Calculation of Computer Uncertainty 61
7.11 Propagation of Error 62
8.0 CALCULATION OF SETPOINTS 70
8.1 Establishment of Allowable Values and Trip Setpoints 70
8.2 Setpoint Presentation - Main Steam High Flow Trip (3840 MWt EPU) 73
9.0 SUMMARY OF RESULTS 75
9.1 Main Steam High Flow Trip 75
9.2 RWM Setpoint 75
9.3 Normal Operation 75
9.4 Input/ Output Documents 76
9.5 Impacted Station Implementing Procedures 76
9.6 Other Documents Affected 81

10.0 ATTACHMENTS

- 10.1 Scaling Calculation (21 pages)
- 10.2 Head Correction Determination (1 page)
- 10.3 Iterations (5 pages)
- 10.4 Pressure versus Flow Relationship (4 pages)
- 10.5 Keithly Digital Multimeter (1 page)
- 10.6 Primary Element Accuracy (1 page)
- 10.7 Process Measurement Accuracy (1 page)
- 10.8 Full Power Pressure Data (10 pages)
- 10.9 Total Steam Flow versus Core Thermal Power (4 pages)

1.0 PURPOSE/SCOPE

1.1 Purpose

The purpose of this calculation is to determine the total loop instrument inaccuracies associated with the Main Steam flow instrumentation and determine the instrument setpoints. In addition, this calculation provides loop calibration and recalibration tolerances for the Main Steam flow instrumentation.

This calculation is revised to support the Hope Creek Generating Station Extended Power Uprate (EPU). As a result of the EPU, both the Main Steam flow spans and trip setpoint will be increased.

Engineering Change 80028591, MCR Recorder Upgrade, (Ref. 3.4.21) replaced the Total Steam Flow, Feed Flow Recorder 1AEFR-R607. There was no change identified on the Affected Document List to revise the calculation. This revision to the calculation will update the information for the new recorder.

1.2 Scope

(Ref. 3.3.1, 3.3.2, 3.3.9, 3.4.27)

The Safety Related portion of this calculation is limited to the following Instrument Loop Configurations:

Flow Element	DP Transmitter	Trip Unit
1ABFE-N051-B21	1ABPDT-N086A-B21	1ABPDISH-N686A-B21
	1ABPDT-N086B-B21	1ABPDISH-N686B-B21
	1ABPDT-N086C-B21	1ABPDISH-N686C-B21
	1ABPDT-N086D-B21	1ABPDISH-N686D-B21
1ABFE-N052-B21	1ABPDT-N087A-B21	1ABPDISH-N687A-B21
	1ABPDT-N087B-B21	1ABPDISH-N687B-B21
	1ABPDT-N087C-B21	1ABPDISH-N687C-B21
	1ABPDT-N087D-B21	1ABPDISH-N687D-B21
1ABFE-N053-B21	1ABPDT-N088A-B21	1ABPDISH-N688A-B21
	1ABPDT-N088B-B21	1ABPDISH-N688B-B21
	1ABPDT-N088C-B21	1ABPDISH-N688C-B21
	1ABPDT-N088D-B21	1ABPDISH-N688D-B21
1ABFE-N054-B21	1ABPDT-N089A-B21	1ABPDISH-N689A-B21
	1ABPDT-N089B-B21	1ABPDISH-N689B-B21
	1ABPDT-N089C-B21	1ABPDISH-N689C-B21
	1ABPDT-N089D-B21	1ABPDISH-N689D-B21

The Non-Safety Related portion of this calculation listed below are for the individual loops where the square root function has been performed by the DFCS I/A software:

Flow Element	DP Transmitter	DCFS Input Mod	DCFS Output Mod	End Device
1ABFE-N051-B21	1AEPDT-N003A-C32	1AEXY-612F42(-3)	1AEXY-612F42(-6)	1AEFI-R603A A2609 GETARS
			1AEXY-612F53(-10)	Note 1
1ABFE-N052-B21	1AEPDT-N003B-C32	1AEXY-612F44(-3)	1AEXY-612F44(-6)	1AEFI-R603B A2610 GETARS
			1AEXY-612F53(-10)	Note 1
1ABFE-N053-B21	1AEPDT-N003C-C32	1AEXY-612F46(-3)	1AEXY-612F46(-6)	1AEFI-R603C A2611 GETARS
			1AEXY-612F53(-10)	Note 1
1ABFE-N054-B21	1AEPDT-N003D-C32	1AEXY-612F43(-3)	1AEXY-612F43(-7)	1AEFI-R603D A2612 GETARS
			1AEXY-612F53(-10)	Note 1

Note 1: Drain Valve A, B, C, D Isolation Interlock

The Non-Safety Related portion of this calculation listed below are for the individual loops where the square root function has been performed by the DFCS I/A software and also summed for a new Total Steam Flow output of 0 – 20 Mlb/hr:

Flow Element	DP Transmitter	DCFS Input Mod		DCFS Output Mod	End Device
1ABFE-N051-B21	1AEPDT-N003A-C32	1AEXY-612F42(-3)	$\sqrt{}$	1AEXY-612F45(-7)	1AEFR-R607 A1735 GETARS
1ABFE-N052-B21	1AEPDT-N003B-C32	1AEXY-612F44(-3)	and	1AEXY-612F48(-16) 1AEXY-612F37(-16)	RWM LPAP
				1AEXY-612F38(-16)	RWM LPSP
1ABFE-N053-B21	1AEPDT-N003C-C32	1AEXY-612F46(-3)	$\sum$	Transfer to 3E	Internal
1ABFE-N054-B21	1AEPDT-N003D-C32	1AEXY-612F43(-3)		Transfer Startup to Manual	Internal

Instrument loop uncertainties are calculated for all of the above devices except the Drain Valve A, B, C, D Isolation Interlock, Transfer to Three Element Control and Transfer Startup to Manual. The setpoints for these functions are considered nominal; therefore, only scaling has been performed for these functions.

2.0 FUNCTIONAL DESCRIPTION/DESIGN BASIS

2.1 Functional Description

The Reactor Coolant System (RCS) includes those systems and components that contain or transport fluids coming from, or going to, the reactor core. These systems form a major portion of the reactor coolant pressure boundary (RCPB).

The Main Steam Supply system transports steam from the Nuclear Steam Supply System to the Power conversion system and to various types of auxiliary equipment.

Safety Related Main Steam flow instrumentation loops are designed to provide automatic closure of the Main Steam Line Isolation Valves. In addition Non- Safety Related instrumentation is provided for input into the Digital Feedwater Control System supplying indication, computer data, and total steam flow input into a recorder. Interlocks and alarms on steam flow are provided for use in the RWM logic. An alarm on low steam flow alerts operators that the above RWM insertion interlock setpoint is being approached (Ref. 3.1.8).

2.2 Design Basis

The Main Steam piping lines that extend from the Reactor Vessel up to and including the outboard Main Steam Isolation Valves (MSIV) are required to be capable of automatic closure during all modes of reactor operation (Ref. 3.1.2). Main Steam high flow could indicate a breach in a Main Steam line. Automatic closure of the MSIVs prevent the excessive loss of reactor coolant and release of significant amounts of radioactive material. Four safety related Main Steam flow differential pressure transmitters are provided to supply the trip logic loops on each main steam line. When a significant increase in main steam line flow is detected by both trip systems (A and B), trip signals initiate closure of all main steam line isolation and drain valves. (Ref. 3.1.3). The trip occurs prior to a post-accident harsh environment (Ref. 3.4.45).

Current Technical Specifications requirements are:
(Ref. 3.2.1), Table 3.3.2-2 (3d)

Trip Function	Trip Setpoint	Allowable Value
Main Steam Line Flow – High	≤ 108.7 psid	≤ 111.7 psid

As a result of the Hope Creek Extended Power Uprate, Technical Specifications are being changed to:

Trip Function	Trip Setpoint	Allowable Value
Main Steam Line Flow – High	≤ 162.8 psig	≤ 169.3 psig

GE Task Report T0506 establishes the trip setpoint and Allowable Value (Ref. 3.4.22).

3.0 REFERENCES

3.1 Updated Final Safety Analysis Report

3.1.1 Section 5.1 – Summary Description
3.1.2 Section 5.4.4 – Main Steam Line Flow Restrictors
3.1.3 Section 5.4.9 – Main Steam Lines and Feedwater Lines
3.1.4 Section 7.3.1.1.2.3.e – Main Steam Line High Flow
3.1.5 Section 15.6.4 – Steam System Piping Break Outside Containment
3.1.6 Table 7.3.5 – Primary Containment and Reactor Vessel Isolation Control System Instrument Ranges
3.1.7 Figure 5.4-6 - Main Steam Line Flow Restrictors
3.1.8 Section 7.7.1.3 – Feedwater Control System

3.2 Technical Specifications

3.2.1 Table 3.3.2-2 – Isolation Actuation Instrumentation Setpoints, Item 3.d, Main Steam Line Flow - High
3.2.2 Table 4.3.2.1-1 – Isolation Actuation Instrumentation Surveillance Requirements, Item 3.d, Main Steam Line Flow - High
3.2.3 Section 3.1.4.1 – Rod Worth Minimizer

3.3 Drawings

3.3.1 M-41-1 Sheet 1, Rev. 34 – Nuclear Boiler P&ID
3.3.2 M-41-1 Sheet 2, Rev. 24 – Nuclear Boiler P&ID
3.3.3 FSK-P-0214, Rev. 14 – Main Steam Lines A & B Inside Drywell
3.3.4 FSK-P-0215, Rev. 15 – Main Steam Lines C & D Inside Drywell
3.3.5 1-P-AB-011 Sht. 1, Rev. 11 – Fab. Isometric/Main Steam Lead – Turbine Bldg.
3.3.6 J-J1704-1, Rev. 2 – Instrument Location Drawing – El. 112' – 0"
3.3.7 J-J1302-1, Rev. 10 – Instrument Location Drawing – El. 77' – 0"
3.3.8 J-J1402-1, Rev. 6 – Instrument Location Drawing – El. 77' – 0"
3.3.9 H-1-AE-ECS-0128 Sht. 3E, Rev. 2 – Steam Flows
3.3.10 H-1-AE-ECS-0128 Sht. 3N, Rev. 2 – Steam Flow Alarm
3.3.11 1-P-AB-248, Rev. 5 – Main Steam Lime A & B Instr Line from Pene to Tubing
3.3.12 1-P-AB-249, Rev. 4 – Main Steam Lime A & B Instr Line from Pene to Tubing
3.3.13 1-P-AB-250, Rev. 5 – Reactor Bldg – Main Steam Line C & D Lines from Pene to Tubing
3.3.14 1-P-AB-251, Rev. 4 – Reactor Bldg – Main Steam Line C & D Instr Lines
3.3.15 1-P-AB-252, Rev. 5 – Drywell Instrument Line from FE-N051
3.3.16 1-P-AB-253, Rev. 4 – Drywell Instrument Line from FE-N052
3.3.17 1-P-AB-254, Rev. 4 – Drywell Instrument Line from FE-N051
3.3.18 1-P-AB-255, Rev. 4 – Drywell Instrument Line from FE-N052
3.3.19 1-P-AB-256, Rev. 5 – Drywell Instrument Line from FE-N051
3.3.20 1-P-AB-257, Rev. 4 – Drywell Instrument Line from FE-N052
3.3.21 1-P-AB-258, Rev. 4 – Drywell Bldg Instrument Line from FE-N051
3.3.22 1-P-AB-259, Rev. 5 – Drywell Bldg Instrument Line from FE-N052
3.3.23 1-P-AB-260, Rev. 6 – Drywell Bldg Main Steam Instrument Line from FE-N053 to J27A
3.3.24 1-P-AB-261, Rev. 4 – Drywell Bldg Main Steam Instrument Line from FE-N054 to Pene J28A
3.3.25 1-P-AB-262, Rev. 3 – Drywell Bldg Main Steam Instrument Line from FE-N053 to Pene

J21A

3.3.26 1-P-AB-263, Rev. 5 – Drywell Bldg Main Steam Instrument Line from FE-N054 to Pene J21O

3.3.27 1-P-AB-264, Rev. 4 – Drywell Bldg Main Steam Instrument Line from FE-N053 to Pene J21E

3.3.28 1-P-AB-265, Rev. 6 – Drywell Bldg Main Steam Instrument Line from FE-N054 to Pene J21F

3.3.29 1-P-AB-266, Rev. 3 – Drywell Bldg Main Steam Instrument Line from FE-N053 to Pene J27D

3.3.30 1-P-AB-267, Rev. 4 – Drywell Bldg Main Steam Instrument Line from FE-N054 to Pene J28O

3.3.31 FSK-JD-1302-1-013-1, Rev. 7 – 45 Degrees Flued Head Bank – 24 Degrees AZ Tubing Run

3.3.32 FSK-JD-1302-1-013-3, Rev. 4 – 45 Degrees Flued Head Bank – 24 Degrees AZ Tubing Run

3.3.33 FSK-JD-1302-1-013-4, Rev. 3 – 45 Degrees Flued Head Bank – 24 Degrees AZ Tubing Run

3.3.34 FSK-JD-1302-1-013-5, Rev. 3 – 45 Degrees Flued Head Bank – 24 Degrees AZ Tubing Run

3.3.35 FSK-JD-1302-1-013-6, Rev. 5 – 45 Degrees Flued Head Bank – 24 Degrees AZ Tubing Run

3.3.36 FSK-JD-1302-1-013-7, Rev. 2 – 45 Degrees Flued Head Bank – 24 Degrees AZ Tubing Run

3.3.37 FSK-JD-1302-1-018-1, Rev. 8 – 45 Degrees Flued Head Bank – 28 Degrees AZ Tubing Run

3.3.38 FSK-JD-1302-1-018-3, Rev. 5 – 45 Degrees Flued Head Bank – 28 Degrees AZ Tubing Run

3.3.39 FSK-JD-1302-1-018-4, Rev. 5 – 45 Degrees Flued Head Bank – 28 Degrees AZ Tubing Run

3.3.40 FSK-JD-1302-1-018-5, Rev. 6 – 45 Degrees Flued Head Bank – 28 Degrees AZ Tubing Run

3.3.41 FSK-JD-1302-1-018-6, Rev. 4 – 45 Degrees Flued Head Bank – 28 Degrees AZ Tubing Run

3.3.42 FSK-JD-1302-1-018-7, Rev. 4 – 45 Degrees Flued Head Bank – 28 Degrees AZ Tubing Run

3.3.43 FSK-JD-1302-1-018-9, Rev. 4 – 45 Degrees Flued Head Bank – 28 Degrees AZ Tubing Run

3.3.44 FSK-JD-1302-1-018-10, Rev. 4 – 45 Degrees Flued Head Bank – 28 Degrees AZ Tubing Run

3.3.45 FSK-JD-1402-1-001-1, Rev. 7 – 315 Degrees Flued Head Bank – 307 Degrees AZ Tubing Run

3.3.46 FSK-JD-1402-1-001-3, Rev. 3 – 315 Degrees Flued Head Bank – 307 Degrees AZ Tubing Run

3.3.47 FSK-JD-1402-1-001-4, Rev. 4 – 315 Degrees Flued Head Bank – 307 Degrees AZ Tubing Run

3.3.48 FSK-JD-1402-1-001-5, Rev. 3 – 315 Degrees Flued Head Bank – 307 Degrees AZ Tubing

Run

3.3.49 FSK-JD-1402-1-001-6, Rev. 4 – 315 Degrees Flued Head Bank – 307 Degrees AZ Tubing Run

3.3.50 FSK-JD-1402-1-001-11, Rev. 5 – 315 Degrees Flued Head Bank – 307 Degrees AZ Tubing Run

3.3.51 FSK-JD-1402-1-001-12, Rev. 4 – 315 Degrees Flued Head Bank – 307 Degrees AZ Tubing Run

3.3.52 FSK-JD-1402-1-001-13, Rev. 4 – 315 Degrees Flued Head Bank – 307 Degrees AZ Tubing Run

3.3.53 FSK-JD-1402-1-002-1, Rev. 8 – 315 Degrees Flued Head Bank – 331 Degrees AZ Tubing Run

3.3.54 FSK-JD-1402-1-002-3, Rev. 3 – 315 Degrees Flued Head Bank – 331 Degrees AZ Tubing Run

3.3.55 FSK-JD-1402-1-002-4, Rev. 3 – 315 Degrees Flued Head Bank – 331 Degrees AZ Tubing Run

3.3.56 FSK-JD-1402-1-002-5, Rev. 3 – 315 Degrees Flued Head Bank – 331 Degrees AZ Tubing Run

3.3.57 FSK-JD-1402-1-002-6, Rev. 4 – 315 Degrees Flued Head Bank – 331 Degrees AZ Tubing Run

3.3.58 FSK-JD-1402-1-002-7, Rev. 4 – 315 Degrees Flued Head Bank – 331 Degrees AZ Tubing Run

3.3.59 FSK-JD-1402-1-002-8, Rev. 7 – 315 Degrees Flued Head Bank – 331 Degrees AZ Tubing Run

3.3.60 FSK-JD-1402-1-002-10, Rev. 5 – 315 Degrees Flued Head Bank – 331 Degrees AZ Tubing Run

3.3.61 H-1-AE-ECS-0128 Sht. 4, Rev. 6 – Detailed Design Document – Software Description

3.3.62 H-1-AE-ECS-0128 Sht. 3O, Rev. 1 – 1E / 3E Transfer

3.3.63 H-1-AE-ECS-0128 Sht. 2, Rev. 4 – System Requirements Specification

3.3.64 J-200(Q)-B002, Rev. 16, Panel Recorders

3.3.65 J-200(Q)-C016, Rev. 9, Panel Multi – Indicators Type 775

3.3.66 J-0677-0, Sheet 12, Rev. 4, MCR Standard Scales

3.3.67 J-0677-0, Sheet 32, Rev. 1, Legends (Units & Multiplying Factors)

3.4 Support Documents

3.4.1 Technical Standard DE-TS.ZZ-1001 (Q), Rev. 2, Instrument Setpoint Calculations.

3.4.2 SC.DE-TS.ZZ-1904(Q) Rev. 0, Salem Unit 1 and 2 Technical Standard for Setpoints

3.4.3 SAP database

3.4.4 ISA-RP67.04.02-2000, Methodologies for the Determination of Setpoints for Nuclear Safety-Related Instrumentation, approved 1 January 2000

3.4.5 NRC Regulatory Guide 1.105, Rev. 3, Dec. 1999 – Instrument Setpoints

3.4.6 D7.5, Rev. 19 – Environmental Design Criteria

3.4.7 PN1-H21-S001-0228 Volume 1, Rev. 27 – Hope Creek 1, Instruction Manual for Vendor Supplied Instruments (DCRMS Pg. 626 – 629) 1153; and VTD 316890, Model 1151 Alphaline Pressure Transmitter, Product Data Sheet PDS 4360, June 1992 (DCRMS Pgs. 5 – 20)

3.4.8 PN1-H21-S001-0228 Volume 2, Rev. 10 – Hope Creek 1, Instruction Manual for Vendor Supplied Instruments (DCRMS Pg. 128 – 134 & 138)
3.4.9 PN0-B21-4020-0032, Rev. 19 – Design Spec Data Sheet for Nuclear Boiler System
3.4.10 DE-CB.AB/KP-0053 (Q), Rev. 2 – Configuration Baseline Document for Main Steam Supply System
3.4.11 PN0-B21-N051-0021, Rev. 1 – Nuclear Boiler System Design Specification
3.4.12 PN0-B21-N051- 0022, Rev. 1 – Nuclear Boiler System Design Specification Data Sheet
3.4.13 PN1-B21-N051- 0006, Rev. 5 – Flow Element (N051 & N054)
3.4.14 PN0-B21-N051- 0017, Rev. 1 – Flow Element (N052 & N053)
3.4.15 301129, Rev. 19, Rosemount Report D8600063 Revision A Results of Low Radiation Dose Rate (DCRMS Pg. 100 & 126)
3.4.16 SC-BB-0355, Attachment A, Foxboro Specification PSS21H-2B7 B4, I/A Series (FBM 04) and Attachment D, Notes of Vendor Telephone Conversion
3.4.17 VTD 317037, Sht. 4, Rev. 1 – Wiring Diagrams – DFCS Analog Outputs
3.4.18 VTD 317037, Sht. 6, Rev. 1 – Wiring Diagrams – DFCS Analog Outputs
3.4.19 VTD 317038, Sht. 4, Rev. 1 – Wiring Diagrams – DFCS Analog Inputs
3.4.20 PSJ200Q-006, Rev. 1 – Bailey 7000 Multi Indicator Type 775
3.4.21 DCP 80028591R4, Hope Creek Main Control Room Recorder Upgrade
3.4.22 VTD 430036 (002), GE-NE-0000-0005-4365-01, Revision 1, Class III, February. 2005 – GE Nuclear Energy Project Task Report for Hope Creek Generating Station Extended Power Uprate (Task T0506)
3.4.23 PN1-H21-P015-0080, Rev. 5 – Main Steam Flow A/B Local Panel
3.4.24 PN1-H21-P025-0071, Rev. 6 – Main Steam Flow C/D Local Panel
3.4.25 PN1-H21-P041-0082, Rev. 5 – Main Steam Flow A/B Local Panel
3.4.26 PN1-H21-P042-0073, Rev. 5 – Main Steam Flow C/D Local Panel
3.4.27 PN1-C32-1050-0012 Sht. 14, Rev. 1 – Feedwater Control System Elem Diag
3.4.28 S-C-ZZ-EEE-0625 Rev. 2, Engineering Evaluation of Salem Generating Station Units 1 and 2 Measuring and Test Equipment Accuracy's
3.4.29 VTD 430008 (002), GE-NE-0000-0005-2987, Revision 4, December 2004 - GE Nuclear Energy Project Task Report for Hope Creek Generating Station Extended Power Uprate (Task T0300)
3.4.30 VTD 430003 (002), GE-NE-0000-0005-3984, Revision 0, Supplement 1, July 2004 - GE Nuclear Energy Project Task Report for Hope Creek Generating Station Extended Power Uprate (Task T0100)
3.4.31 VTD 430034 (002), GE-NE-0000-0006-2022-01, Revision 1, October 2004 - GE Nuclear Energy Project Task Report for Hope Creek Generating Station Extended Power Uprate (Task T0504)
3.4.32 VTD 430063 (002), GE-NE-0000-0006-2022-01, Revision 1, April 2004 - GE Nuclear Energy Project Task Report for Hope Creek Generating Station Extended Power Uprate (Task T0904)
3.4.33 PN1-C32-1050-0012 Sht. 15, Rev. 2 – Feedwater Control System Elem Diag
3.4.34 PN1-C32-1050-0012 Sht. 17, Rev. 1 – Feedwater Control System Elem Diag
3.4.35 VTD 317036, Sht. 7, Rev. 1 – Wiring Diagrams – DFCS Analog Outputs
3.4.36 VTD 317037, Sht. 8, Rev. 1 – Wiring Diagrams – DFCS Analog Outputs
3.4.37 SC-BE-0001-1, Attachment 10.2
3.4.38 Fluid Meters, Their Theory and Application, ASME Sixth Edition, 1971

3.4.39 ASME MFC-3M-1989, Measurement of Fluid Flow in Pipes Using Orifice, Nozzle, and Venturi
3.4.40 H-1-RJ-ECS-0035, Volume 5, Sh. 5, Rev. 3, CRIDS Overhead Alarm Design
3.4.41 ASME Steam Tables, Sixth Edition
3.4.42 PSJ900-001, Rev. 21 – GETARS
3.4.43 VTD 324351, GEK-105904, NUMAC RWM (includes User's Manual)
3.4.44 80048085, Extended Power Uprate (EPU) Implementation, AD I043R0
3.4.45 VTD 314172, NEDC-31336, Class III, October 1986, General Electric Instrument Setpoint Methodology

3.5 Procedures

3.5.1 HC.IC-SC.AB-0001, Rev. 14 – Sensor Cal. – Div. 1 Channel B21-N686A Main Steam Line Flow
3.5.2 HC.IC-SC.AB-0002, Rev. 14 – Sensor Cal. – Div. 2 Channel B21-N686B Main Steam Line Flow
3.5.3 HC.IC-SC.AB-0003, Rev. 15 – Sensor Cal. – Div. 3 Channel B21-N686C Main Steam Line Flow
3.5.4 HC.IC-SC.AB-0004, Rev. 14 – Sensor Cal. – Div. 4 Channel B21-N686D Main Steam Line Flow
3.5.5 HC.IC-SC.AB-0005, Rev. 14 – Sensor Cal. – Div. 1 Channel B21-N687A Main Steam Line Flow
3.5.6 HC.IC-SC.AB-0006, Rev. 14 – Sensor Cal. – Div. 2 Channel B21-N687B Main Steam Line Flow
3.5.7 HC.IC-SC.AB-0007, Rev. 14 – Sensor Cal. – Div. 3 Channel B21-N687C Main Steam Line Flow
3.5.8 HC.IC-SC.AB-0008, Rev. 13 – Sensor Cal. – Div. 4 Channel B21-N687D Main Steam Line Flow
3.5.9 HC.IC-SC.AB-0009, Rev. 12 – Sensor Cal. – Div. 1 Channel B21-N688A Main Steam Line Flow
3.5.10 HC.IC-SC.AB-0010, Rev. 12 – Sensor Cal. – Div. 2 Channel B21-N688B Main Steam Line Flow
3.5.11 HC.IC-SC.AB-0011, Rev. 13 – Sensor Cal. – Div. 3 Channel B21-N688C Main Steam Line Flow
3.5.12 HC.IC-SC.AB-0012, Rev. 13 – Sensor Cal. – Div. 4 Channel B21-N688D Main Steam Line Flow
3.5.13 HC.IC-SC.AB-0013, Rev. 13 – Sensor Cal. – Div. 1 Channel B21-N689A Main Steam Line Flow
3.5.14 HC.IC-SC.AB-0014, Rev. 12 – Sensor Cal. – Div. 2 Channel B21-N689B Main Steam Line Flow
3.5.15 HC.IC-SC.AB-0015, Rev. 12 – Sensor Cal. – Div. 3 Channel B21-N689C Main Steam Line Flow
3.5.16 HC.IC-SC.AB-0016, Rev. 12 – Sensor Cal. – Div. 4 Channel B21-N689D Main Steam Line Flow
3.5.17 HC.IC-CC.AB-0001, Rev. 11 – Chan. Cal. – Div. 1 Channel B21-N686A Main Steam Line Flow

3.5.18 HC.IC-CC.AB-0002, Rev. 11 – Chan. Cal. – Div. 2 Channel B21-N686B Main Steam Line Flow
3.5.19 HC.IC-CC.AB-0003, Rev. 11 – Chan. Cal. – Div. 3 Channel B21-N686C Main Steam Line Flow
3.5.20 HC.IC-CC.AB-0004, Rev. 10 – Chan. Cal. – Div. 4 Channel B21-N686D Main Steam Line Flow
3.5.21 HC.IC-CC.AB-0005, Rev. 10 – Chan. Cal. – Div. 1 Channel B21-N687A Main Steam Line Flow
3.5.22 HC.IC-CC.AB-0006, Rev. 11 – Chan. Cal. – Div. 2 Channel B21-N687B Main Steam Line Flow
3.5.23 HC.IC-CC.AB-0007, Rev. 11 – Chan. Cal. – Div. 3 Channel B21-N687C Main Steam Line Flow
3.5.24 HC.IC-CC.AB-0008, Rev. 12 – Chan. Cal. – Div. 4 Channel B21-N687D Main Steam Line Flow
3.5.25 HC.IC-CC.AB-0009, Rev. 11 – Chan. Cal. – Div. 1 Channel B21-N688A Main Steam Line Flow
3.5.26 HC.IC-CC.AB-0010, Rev. 11 – Chan. Cal. – Div. 2 Channel B21-N688B Main Steam Line Flow
3.5.27 HC.IC-CC.AB-0011, Rev. 12 – Chan. Cal. – Div. 3 Channel B21-N688C Main Steam Line Flow
3.5.28 HC.IC-CC.AB-0012, Rev. 11 – Chan. Cal. – Div. 4 Channel B21-N688D Main Steam Line Flow
3.5.29 HC.IC-CC.AB-0013, Rev. 11 – Chan. Cal. – Div. 1 Channel B21-N689A Main Steam Line Flow
3.5.30 HC.IC-CC.AB-0014, Rev. 11 – Chan. Cal. – Div. 2 Channel B21-N689B Main Steam Line Flow
3.5.31 HC.IC-CC.AB-0015, Rev. 11 – Chan. Cal. – Div. 3 Channel B21-N689C Main Steam Line Flow
3.5.32 HC.IC-CC.AB-0016, Rev. 12 – Chan. Cal. – Div. 4 Channel B21-N689D Main Steam Line Flow
3.5.33 HC.IC-FT.BB-0068, Rev. 6 – Func. Cal. – RPS A1, NSSS A Rosemount Trip Units
3.5.34 HC.IC-FT.BB-0069, Rev. 5 – Func. Cal. – RPS A1, NSSS C Rosemount Trip Units
3.5.35 HC.IC-FT.BB-0070, Rev. 7 – Func. Cal. – RPS A1, NSSS B Rosemount Trip Units
3.5.36 HC.IC-FT.BB-0071, Rev. 8 – Func. Cal. – RPS A1, NSSS D Rosemount Trip Units
3.5.37 HC.IC-CC.AE-0012, Rev. 8 – RWM – Non-Divisional Channel C32-N003 Total Steam Flow
3.5.38 HC.IC-SC.AE-0018, Rev. 5 – Feedwater – Non-Divisional Channel C32-N003A Main Steam Flow
3.5.39 HC.IC-SC.AE-0019, Rev. 5 – Feedwater – Non-Divisional Channel C32-N003B Main Steam Flow
3.5.40 HC.IC-SC.AE-0020, Rev. 5 – Feedwater – Non-Divisional Channel C32-N003C Main Steam Flow
3.5.41 HC.IC-SC.AE-0021, Rev. 5 – Feedwater – Non-Divisional Channel C32-N003D Main Steam Flow
3.5.42 HC.OP-AR.ZZ-0007, Rev. 22 – Overhead Annunciator Window Box B3
3.5.43 HC.OP-AB.RPV-0005, Rev. 3 – Reactor Pressure
3.5.44 HC.RE-FT.ZZ-0002, Rev. 4 – Alternate Indication of Reactor Power

3.5.45 HC.OP-AR.ZZ-0012, Rev. 11, Overhead Annunciator Window Box C8
3.5.46 HC.OP-DL.ZZ-0026(Q), Rev. 101, Surveillance Log
3.5.47 HC.OP-SO.SF-0003(Q), Rev. 10, Rod Worth Minimizer Operation
3.5.48 HC.MD-DG.ZZ-0009(Z), Rev. 0, Desk Guide, Guidelines for Determining Surveillance Acceptance Criteria

4.0 LOOP DIAGRAM

(Ref. 3.3.1, 3.3.2)

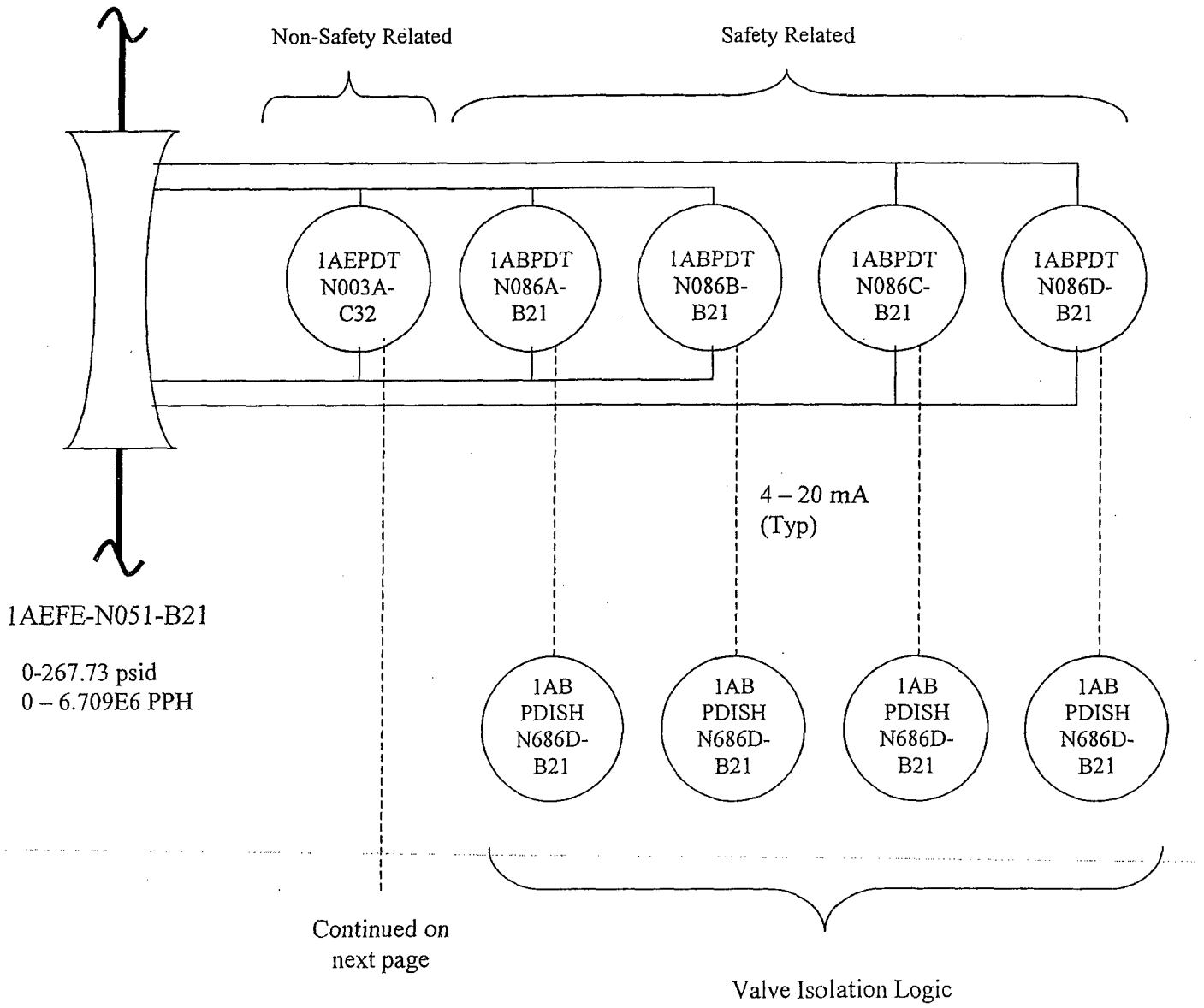

Continued on next page

4.0 Loop Diagram (Continued)

(Ref. 3.3.1, 3.3.2, 3.3.8 - 3.3.10, 3.4.17- 3.4.19)

Continued from previous page

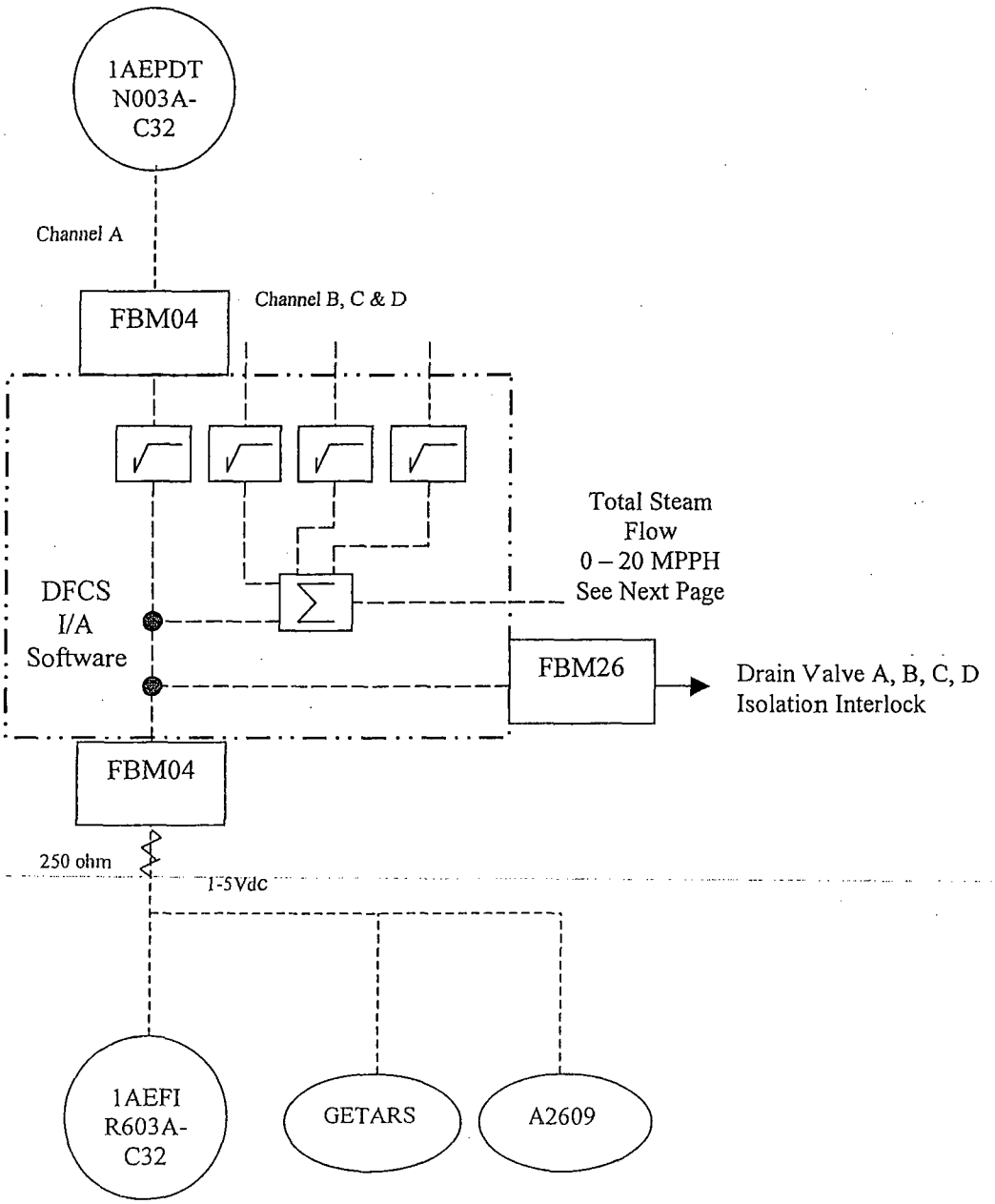

ORIGINATOR:	DATE:	REVIEWER:	DATE:	VERIFIER:	DATE:
A. Shaul	12/2/05	B. Yu	12/2/05	B. Yu	12/2/05

4.0 Loop Diagram (Continued)

(Ref. 3.3.1, 3.3.2, 3.3.8 - 3.3.10, 3.4.17- 3.4.19)

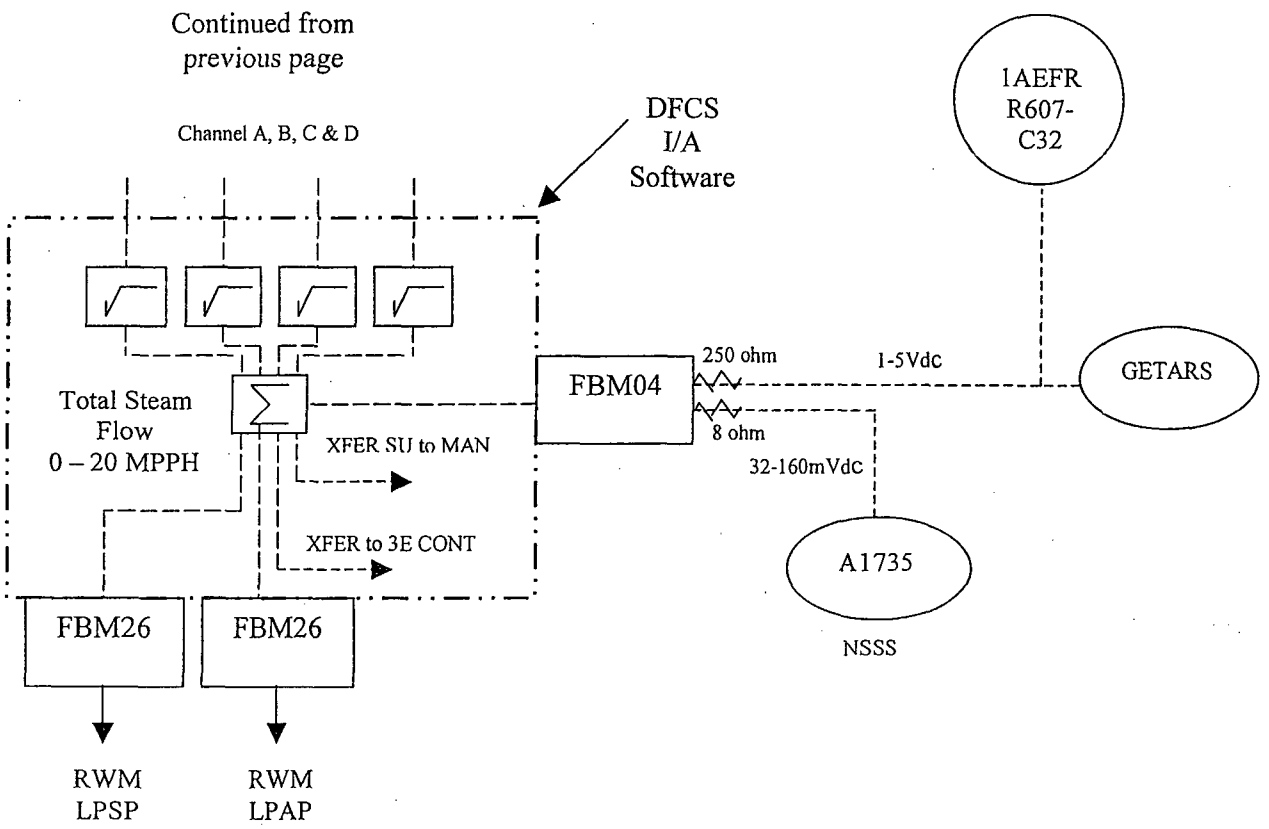

5.0 DESIGN INPUTS

5.1 General Design Inputs

5.1.1 Equipment Locations – Reference 3.4.3

Device	Description	Location
1ABPDT-N086A-D-B21	Transmitter	REACTOR BUILDING 77 LEVEL IN RM 4201
1ABPDT-N087A-D-B21	Transmitter	REACTOR BUILDING 77 LEVEL IN RM 4201
1ABPDT-N088A-D-B21	Transmitter	REACTOR BUILDING 77 LEVEL IN RM 4201
1ABPDT-N089A-D-B21	Transmitter	REACTOR BUILDING 77 LEVEL IN RM 4201
1ABPDISH-N686A-D-B21	Trip Unit	AUXILARY BUILDING 137 LEVEL IN RM 5510
1ABPDISH-N687A-D-B21	Trip Unit	AUXILARY BUILDING 137 LEVEL IN RM 5510
1ABPDISH-N688A-D-B21	Trip Unit	AUXILARY BUILDING 137 LEVEL IN RM 5510
1ABPDISH-N689A-D-B21	Trip Unit	AUXILARY BUILDING 137 LEVEL IN RM 5510
1AEPDT-N003A-C32	Transmitter	REACTOR BUILDING 77 LEVEL IN RM 4201
1AEPDT-N003B-C32	Transmitter	REACTOR BUILDING 77 LEVEL IN RM 4201
1AEPDT-N003C-C32	Transmitter	REACTOR BUILDING 77 LEVEL IN RM 4201
1AEPDT-N003D-C32	Transmitter	REACTOR BUILDING 77 LEVEL IN RM 4201
1AEXY-612F42	Field Bus Module	CONTROL BUILDING 102 LEVEL IN RM 5302
1AEXY-612F43	Field Bus Module	CONTROL BUILDING 102 LEVEL IN RM 5302
1AEXY-612F44	Field Bus Module	CONTROL BUILDING 102 LEVEL IN RM 5302
1AEXY-612F45	Field Bus Module	CONTROL BUILDING 102 LEVEL IN RM 5302
1AEXY-612F46	Field Bus Module	CONTROL BUILDING 102 LEVEL IN RM 5302
1AEFI-R603A-C32	Indicator	AUXILARY BUILDING 137 LEVEL IN RM 5510
1AEFI-R603B-C32	Indicator	AUXILARY BUILDING 137 LEVEL IN RM 5510
1AEFI-R603C-C32	Indicator	AUXILARY BUILDING 137 LEVEL IN RM 5510
1AEFI-R603D-C32	Indicator	AUXILARY BUILDING 137 LEVEL IN RM 5510
1AEFR-R607-C32	Recorder	AUXILARY BUILDING 137 LEVEL IN RM 5510

5.1.2 Environmental Parameters

Per reference 3.4.6, the normal environment parameters are as follows:

Location: Rm. 4201, Motor Control Center

Pressure (min/max):	0/-0.25	in wc
Temperature (min/max):	75/88	deg F
% Relative Humidity (min/max):	20/90	
Max normal dose rate:	2.5	mr/hr
Normal Integrated Dose:	8.8E+02	Rads – Gamma

Per reference 3.4.6, the normal environment parameters are as follows:

Location Rm. 5302, Control Equipment Room

Pressure (min/max):	0.25/-0.25	in wc
Temperature (min/max):	40/85	deg F
% Relative Humidity (min/max):	20/90	
Max normal dose rate:	0.5	mr/hr
Normal Integrated Dose:	2E+02	Rads – Gamma

Per reference 3.4.6, the normal environment parameters are as follows:

Location Rm. 5510, Control Room

Pressure (min/max):	0.25/0	in wc
Temperature (min/max):	66/78	deg F
% Relative Humidity (min/max):	20/60	
Max normal dose rate:	0.5	mr/hr
Normal Integrated Dose:	2E+02	Rads – Gamma

5.1.3 EPU Power Level Background:

The Original Licensed Thermal Power (OLTP) was 3293 MWt. In 2001 a 1.4% power uprate was implemented and HCGS was licensed to the Current Licensed Thermal Power (CLTP) of 3339 MWt (101.4% * 3293). The various GE Task Reports prepared using the Licensed Power Uprate (LPU) of 120% of the OLTP (120% * 3293 = 3952 MWt). In order to address various reactor fuel combinations/types and equipment limitations, additional analysis of 110% CLTP equivalent to 3673 MWt (110% * 3339) and 115% CLTP equivalent to 3840 MWt (115% * 3339) were also performed.

It has since been decided to license the Hope Creek Generating Station to the 115% CLTP value of 3840 MWt. In order to avoid the confusion of using percentage values based on OLTP versus CLTP, the EPU calculations utilize uprate values based on MWt. Therefore, any reference to the 110% CLTP uprate will be made as 3673 MWt and to the 115% CLTP uprate will be made as 3840 MWt.

Since the Hope Creek Generating Station Technical Specification setpoints are based on the licensed uprate value of 3840 MWt, this calculation only addresses flows/dPs based on rated conditions for 3840 MWt power uprate.

5.2 Design Inputs

5.2.1 Flow Nozzle (Ref. 3.4.3, 3.4.11 - 3.4.14)

Component I.D. 1ABFE-N051A/D-B21 Device Type: Venturi
Manufacturer/Model No.: General Electric / 105D5145(6)G1
Quality Classification: Q Accident Service: N/A
Seismic Category: I
Tech Spec Requirement: Yes Section: 3/4.3.2
Rated Flow: 0 – 54.01 psig / 0 - 3.56E6 lbs/hr (Ref. 3.4.12)
Range Limits: 0 - 7.08E6 lbs/hr
Calibrated Range: Input: 0-6.709E6 lbs/hr (Attachment 10.1)
Span: 267.73 psid
Output Signal: 267.73 psid To: 1ABPTN086A-D(087A-D, 088A-D, 089A-D)-B21
Baseline Accuracy (RA): ± 2.0% of Rated Flow (Ref. 3.4.11)
Normal Temperature: 546°F (Ref. 3.4.11)
Reference Pressure for Steam Flow Calculations: 1020 psia (Ref. 3.4.30)
Upstream Diameter: 23.647 in
Throat Diameter: 12.911 in
Coefficient of Discharge: C = 0.995 (Ref. 3.4.12)

5.2.2 Transmitter (Reference 3.4.7)

Component I.D. 1ABPDT-N086A-D(087A-D, 088A-D, 089A-D)-B21
Device Type: D/P Transmitter
Manufacturer/Model No.: Rosemount / 1153DB7RA and 1153DB7PA
Quality Classification: Q Accident Service: Required
Seismic Category: I
Tech Spec Requirement: Yes Section: 3/4.3.2
Range Limits: 0-50 / 0-300 psid
Calibrated Range: Input: 0-267.73 psid Process: 0-6.709E6 lbs/hr
Span: 267.73 psid
Output Signal: 4-20 mAdc To: Trip Unit
Setpoint: N/A Calibration Period: 675 days
Baseline Accuracy (RA): ± 0.25% Span (includes linearity, hysteresis & repeatability)
Deadband (DB): None Drift (DR): ±0.2%URL For: 30 months
Temperature Effect (TE): ± 0.75% URL + 0.5% Span / 100°F
Humidity Effect (HE): None – 0-100% RH with NEMA 4x enclosure
Overpressure Effect (OPE): 2000 psi with no effect
Static Pressure Effect (SPE): ±0.5% URL/1000 psig zero / ±Correctable to 0.5% Reading/1000psi
Power Supply Effect (PSE): ±0.005%URL per Volt
RFI/EMI Effect (REE): No Data Available
Radiation Effect (RE): ±1.0%URL when exposed to dose rates of less than 1 Mrad/hr and a TID of less than 5 Mrads (Ref. 3.4.15)
Seismic Effect (SE): ±0.5%URL during & after a seismic event @ 4g
Steam Pressure/Temperature Effect (SPT): N/A
Assigned Sigma Value: 3 and 2 Basis: Ref. 3.4.1

5.2.3 Trip Unit (Ref. 3.4.8)

Component I.D.: 1ABPDISHN686A-D(687A-D, 688A-D, 689A-D)-B21
Device Type: Trip Unit
Manufacturer / Model No.: Rosemount / 510DU Master
Location: E/137/Rm. 5510 Quality Classification: Q
Accident Service: Required Seismic Category: I
Tech Spec Requirement: Yes Section: 3/4.3.2
Range Limits: 4-20 mAdc Calibrated Range: Input 4-20 mAdc
Process 0 – 267.73 psid = 0 – 6.709E6 lbs/hr
Span: 16 mAdc Process: lbs/hr
Output Signal: Contact Output To: NS4 Isolation Logic
Setpoint: ≤162.8 psig Calibration Period: 675 days
Baseline Accuracy (RA): ± 0.20% span (normal) / ± 0.30% span (accident) repeatability
± 0.01 mA adjustability
Deadband (DB): 0.5% to 7.5% span (Reset) Drift (DR): ±0.20% For: 6 months
Temperature Affect (TE): None Stated, oper. Limit 40-104°F
Humidity Effect (HE): None – oper. Range 20-90% RH
Overpressure Effect (OPE): N/A
Static Pressure Effect (SPE): N/A
Power Supply Effect (PSE): None from 23.5 – 26.5 VDdc
RFI/EMI Effect (REE): None with shielded wires
Radiation Effect (RE): None < 1.5E-2 r/hr & < 5.3E3 rad TID
Seismic Effect (SE): None < 11g
Steam Pressure/Temperature Effect (SPT): N/A
Post DBE Operation (PDB): N/A
Assigned Sigma Value: 3 Basis: Ref. 3.4.1

5.2.4 Transmitter (Reference 3.4.7)

Component I.D. 1AEPDT-N003A/B/C/D-C32 Device Type: D/P Transmitter
Manufacturer/Model No.: Rosemount / 1151DP7E52B2P1P2P8
Quality Classification: Non-Q Accident Service: Not Required
Seismic Category: I
Tech Spec Requirement: No Section: N/A
Range Limits: 300 psi
Calibrated Range: Input: 0-116.82 psid Process: 0-5.0 E6 lbs/hr
Span: 116.82 psid
Output Signal: 4-20 mAdc To: Trip Unit
Setpoint: N/A Calibration Period: 675 days
Baseline Accuracy (RA): ± 0.1% of calibrated span (High Accuracy Option) (includes linearity, hysteresis & repeatability)
Deadband (DB): None Drift (DR): ±0.25%URL For: 6 months
Temperature Effect (TE): ± [(0.5% x URL) + (0.5% x span)]% span per 100°F

Humidity Effect (HE): None – 0-100% RH with NEMA 4x enclosure
Overpressure Effect (OPE): 2000 psi with no effect
Static Pressure Effect (SPE): ±0.25% URL/2000 psig zero / ±Correctable to ±0.25% Reading/1000psi
Power Supply Effect (PSE): ±0.005%URL per Volt
RFI/EMI Effect (REE): No Data Available
Radiation Effect (RE): N/A
Seismic Effect (SE): N/A
Steam Pressure/Temperature Effect (SPT): N/A
Assigned Sigma Value: 2 Basis: Commercial Grade

5.2.5 Interface Module (Ref. 3.4.16, Attachment A & D)

Component I.D. 1AEXY-612F42/44/45/46/48 Device Type: Analog Input/Output
Manufacturer/Model No.: Foxboro / FBM 04
Quality Classification: N/A Accident Service: No
Seismic Category: 1 Excitation: N/A
Tech Spec Requirement: N/A Section: N/A
Range Limits: 0-20 mAdc
Calibrated Range: Input: 4 – 20 mAdc
Span: 16 mA Process: 5 MPPH
Output Signal: 4-20 mAdc To: 1AEFI-N603A/B/C/D-C32, 1AEFR-N607-C32, & Computer
Setpoint: N/A Calibration Period: 675 days
Baseline Accuracy (RA): Input Channel: ± 0.05% span & ± 0.0125% span Linearity Error
Output Channel: ± 0.05% span & ± 0.025% span Linearity Error
Deadband (DB): None Drift (DR): N/A For: N/A
Temperature Effect (TE): Included
Humidity Effect (HE): 5 – 95% Non-condensing
Power Supply Effect (PSE): None Specified

5.2.6 Indicator (Ref. 3.4.20)

Component I.D. 1AEFI-R603A/B/C/D-C32 Device Type: Indicator
Manufacturer/Model No.: Bailey / 775
Quality Classification: Non-Q Accident Service: Not Required
Seismic Category: I
Tech Spec Requirement: No Section: N/A
Range Limits: 1-5 Vdc
Calibrated Range: Input: 1-5 Vdc
Span: N/A
Output Signal: 5 MPPH To: N/A
Setpoint: N/A Calibration Period: 550 days
Baseline Accuracy (RA): ± 0.5% Span
Deadband (DB): N/A Drift (DR): None
Temperature Affect (TE): ±0.4% span, for ±40°F shift from 80°F
Humidity Effect (HE): No Data Available
Power Supply Effect (PSE): ±0.3% span for ±2 Vdc shift from 24 Vdc
RFI/EMI Effect (REE): ±1.0% of ACC in freq. Band 147-160 MHz
Radiation Effect (RE): None
Seismic Effect (SE): N/A
Assigned Sigma Value: 2
Basis: Vendor Specifications

Readability: The smallest demarcations are every 10,000 lbs/hr; therefore, readability is 1.0% span.

5.2.7 Recorder (Ref. 3.4.3, 3.4.21 & 3.5.37)

Component I.D. 1AEFR-R607-C32 Device Type: Recorder
Manufacturer/Model No.: Honeywell / Minitrend V5
Quality Classification: Non-Q Accident Service: Not Required
Seismic Category: I
Tech Spec Requirement: No Section: N/A
Range Limits: 1-5 Vdc
Calibrated Range: Input: 1-5 Vdc
Span: 20.00 MPPH
Output Signal: 20.00 MPPH To: N/A
Setpoint: N/A Calibration Period: 675 days
Baseline Accuracy (RA): ± 0.1% Span
Deadband (DB): N/A Drift (DR): Included with accuracy
Temperature Affect (TE): Included with accuracy
Humidity Effect (HE): Included with accuracy
Power Supply Effect (PSE): Included with accuracy
RFI/EMI Effect (REE): Included with accuracy
Radiation Effect (RE): NA
Seismic Effect (SE): N/A
Assigned Sigma Value: 2
Basis: Vendor Specifications

Readability: Per Total Main Steam Channel Calibration Procedure (Ref. 3.5.37), the output resolution is read to 0.01 MLB/HR. Therefore, readability is taken as ½ the least significant digit and treated as a bias.

5.2.8 Process Inputs

Reference Fluid Meters and GE Nuclear Boiler System Design Specification (Ref. 3.4.11, 3.4.38).

$$W = 359 * \frac{C}{\sqrt{1-\beta^4}} * Y_a * d^2 * Fa * \sqrt{h_w * Den}$$

therefore:

$$h = \left[\frac{W}{359 * C * Y_a * d^2 * Fa}\right]^2 * \left[\frac{1-\beta^4}{Den}\right]$$

and

$$Ya = \left[r^{2/\gamma}\left[\frac{\gamma}{\gamma-1}\right]\left[\frac{1-r^{(\gamma-1)/\gamma}}{1-r}\right]\left[\frac{1-\beta^4}{1-\beta^4 r^{2/\gamma}}\right]\right]^{1/2}$$

Where: Ya = Gas Expansion Factor
r = Ratio of outlet or throat static pressure to inlet static pressure (p_2/p_1)
γ = Isentropic Exponent, ratio of specific heats (symbol "k" used in GE document)

Table 2, Properties of Saturated Steam and Saturated Water (Pressure) of ASME Steam Tables (Ref. 3.4.41) provides an entropy value at 1020 psia of 1.3886 Btu/lbm * R. Saturation temperature at 1020 psia is 547.211°F; therefore, following the lines for the above temperature and entropy in Figure 11, Isentropic Exponent "γ", of the Steam Tables provides a value approximately midway between 1.250 and 1.260 or 1.255. The isentropic exponent of 1.255 was confirmed by GE in a telephone conversation. The results of Attachment 10.3, "Iterations", correspond with the calculations prepared by GE. The GE setpoint and allowable values at 136% and 138% flow, stated in DP, will be used for the determination of margins.

5.2.9 Iterations

Liquids are generally considered non-compressible and a value of 1 is assigned to the gas expansion factor "Ya" in the flow formula from the previous section. Gases (steam) are compressible and expand after they flow through the reduced area of a differential producer since there is a pressure drop. It can be observed from the flow formula that, providing pressure/temperature remains constant, there are 2 related unknowns when calculating the differential pressure at a given flow. In order to determine the DP, it is necessary to know the Ya value, and to calculate the Ya value, it is necessary to know the downstream pressure.

In order to solve this problem, GE goes through many iterations with the initial assumption that Ya equals 1 in order to determine the DP. The upstream to downstream pressure ratio is used to calculate a new gas expansion factor Yb. A new DP value is determined using the following formula:

$$h_b = h_a * (Ya / Yb)^2$$

It can be observed that more iterations are required for the DP and Y values to stabilize at higher flow rates.

5.2.10 Process Pressure Variation
(Ref. 3.5.42, 3.5.43, Attachment 10.4, Attachment 10.8)

The Hope Creek Extended Power Uprate is being performed with no change in Reactor Dome Pressure. Therefore, normal operating pressure is remaining constant at 1020 psia. For the purposes of the High Steam Flow Trip, negative uncertainties are of concern. As demonstrated in Section 7.1, negative process measurement uncertainties result from actual pressures higher than the normal pressure. Review of Plant Historian data as detailed in Section 7.2.4 showed normal operating pressure did not exceed the design pressure of 1020 psia. However, in order to sufficiently bound the uncertainties for a High Steam Flow trip, a value of 1030 psia was chosen, above the DFCS High Pressure alarm setpoint of 1024.4 psig (Ref. 3.5.42). The Alarm Response procedure references operations personnel to an Abnormal Operating procedure (Ref. 3.5.43), which directs them to reduce Reactor Power to maintain the Reactor Vessel Pressure such that the overhead alarm clears.

Another review of Plant Historian data (Attachment 10.4) provides pressure versus flow relationship at 20% flow to 100% flow. Reactor pressure at an average flow of 20% was 937 psia increasing to approximately 1015 psia at 100% flow. Therefore; the lower than design pressure at lower flow rates results in positive uncertainties that are considered a bias. Attachment 10.8 provides a summary of Plant Historian data at full power. It can be noted that in all of the cases that Reactor Dome Narrow Range Pressure was maintained between 1015 psia to 1020 psia; therefore, for normal flow conditions at full power, a small positive bias exists.

6.0 ASSUMPTIONS

6.1 Insulation Resistance Error Assumptions

Insulation Resistance Error is typically applied to instrument loops which are required during accident conditions and which have components inside Containment that are subject to high temperature steam spray. The design basis for the Main Steam High Flow instrumentation loops is to isolate the MSIVs and MSIV drain valves due to a MS line break outside of the Containment. It is assumed that the Insulation Resistance Error caused by elevated temperature levels, without a HELB, is negligible.

6.2 Computer Accuracy

The accuracy of the Computer is assumed to be ± 0.25% span. This value includes drift, temperature effects and all other potential uncertainties for the analog to digital conversion.

6.3 Resistor Accuracy

The accuracy of the resistors at the DFCS output is assumed to be ± 0.1%.

6.4 Readability

Readability is assumed to be ½ of the smallest demarcation.

7.0 UNCERTAINTIES

Accuracies for qualified equipment are normally expressed in terms of 3 Sigma. For the purposes of this calculation, all accuracies will be converted and expressed as 2 Sigma values when appropriate.

7.1 Primary Element Accuracy (PEA)
(Section 5.2.1)

7.1.1 Flow Element - High Steam Flow Trip

Per Reference 3.4.30, total steam flow is 16.773E+06 lbs/hr; therefore, 100% flow for each loop is 4,193,000 lbs/hr (rounded) and the 136% flow setpoint is 5,702,480 lbs/hr. The DP has been determined to be 162.8 psid at 136% flow (Attachment 10.3). Since the Tech Spec setpoint for automatic closure of the Main Steam Line Isolation Valves is expressed in DP, the error will be converted from flow to percent of DP span.

The Venturi accuracy is ± 2.0% Rated Flow per Reference 3.4.11: therefore:

2% * 5,702,480 lbs/hr = 114,050 lbs/hr

From Section 5.2.8:

$$h = \left(\frac{W}{359 * C * Y_a * d^2 * Fa} \right)^2 * \left(\frac{1 - \beta^4}{Den} \right)$$

Therefore, inserting the following values from Attachment 10.3:

$$h = \left(\frac{5702480 - 114050}{359 * 0.995 * 0.89025 * 12.911^2 * 1.009} \right)^2 * \left(\frac{1 - 0.5460^4}{2.293} \right)$$

h = 4337.84

DP = (h * 62.316) / 1728
= (4337.84* 62.316) / 1728
= 156.43 psia

PEA = 156.43 – 162.88
= -6.45 psia

or stated in %DP span:

PEA = -6.45 / 267.73 * 100%
= -2.41% span (DP)

7.1.2 Flow Element - Flow Indication

The Non-Safety Related portion of the Main Steam DP signal from the individual loops is converted to a flow signal of 0 – 5 Mlb/hr by the DFCS I/A software (where the square root function is performed). Additionally, the individual flow signals are also summed for a new Total Steam Flow output of 0 – 20 Mlb/hr.

The following Table summarizes the PEA Error at various flow rates for the individual loop flow indication from Attachment 10.6:

		Flow Error		% DP Span Error	
% Flow	PPH	(PPH)	% Span	Pos	Neg
20	838600	16772	0.34	0.04	-0.04
30	1257900	25158	0.50	0.10	-0.09
40	1677200	33544	0.67	0.17	-0.17
50	2096500	41930	0.84	0.27	-0.26
60	2515800	50316	1.01	0.39	-0.38
70	2935100	58702	1.17	0.54	-0.53
80	3354400	67088	1.34	0.72	-0.70
90	3773700	75474	1.51	0.93	-0.91
100	4193000	83860	1.68	1.17	-1.15
110	4612300	92246	1.84	1.46	-1.43
119.2428	5000000	100000	2.00	1.76	-1.73
120	5031600	100632		1.79	-1.75
130	5450900	109018		2.19	-2.14
136	5702480	114050		2.46	-2.41
138	5786340	115727		2.56	-2.51
140	5870200	117404		2.66	-2.61

Note that the error is expressed both in % flow span for use in the indication error propagation and in % DP span for use in setpoint error propagation.

7.2 Process Measurement Accuracy (PMA)

The worst case positive uncertainties result from fluids having the highest specific gravity and the worst case negative uncertainties result from fluids having the lowest specific gravity. Since the steam is saturated vapor at a high pressure, the important parameter in determining density effect is process pressure variation. Therefore, the worst case positive uncertainties are calculated considering the lowest pressure. Conversely, the worst case negative uncertainties are calculated considering the highest pressure.

7.2.1 High Steam Flow Trip

For the purpose of determining PMA for the high flow trip function, it is appropriate to only consider negative uncertainties.

Specific Gravity at 1030 psia [Negative Uncertainties]

$SVF_{1030\ psia} = 0.431462\ ft^3/lb$

Specific Gravity at Reference (1020 psia)

$SVF_{REF} = 0.4362025\ ft^3/lb$

PM = h1[(SVF2/SVF1) – 1]

Where SVF1 is at the calibration base and SVF2 is at actual conditions. See Attachment 10.3 for determination of h1.

<u>3840 MWt - Uncertainties (@136% Flow)</u>

PMA = 162.8[(0.431462/0.4362025) – 1]
PMA = -1.77 psid

PMA = -1.77 psid / 267.73 psid
= - 0.66% span

7.2.2 Flow Indication

It is observed in Attachment 10.4 that pressure increases as power/flow increases. Since the venturi was sized for 100% flow conditions at a pressure of 1020 psia, only positive uncertainties are applicable for the flow indication during lower flow conditions.

Specific Gravity at 937 psia [Positive Uncertainties]

$SVF_{937\ psia} = 0.479271\ ft^3/lb$

Specific Gravity at Reference (1020 psia)

$SVF_{REF} = 0.4362025\ ft^3/lb$

PMA = h1[(SVF2/SVF1) – 1]

Where SVF1 is at the calibration base and SVF2 is at actual conditions.

3840 MWt

<u>+ Uncertainties (@20% Flow)</u>

PMA = 77.70[(0.479271/0.4362025) – 1]
PMA = 7.672 inwc

Observed h = 77.70 + 7.67 = 85.37 inwc

$$W = 359*(C/((1-\beta^4)^{1/2}))*Ya*d^2*Fa*(h*Den)^{1/2}$$
$$= 359*(0.995/((1-0.5460^4)^{1/2}))*0.9981*12.911^2*1.009*(85.37*2.293)^{1/2}$$
$$= 878957\ lbs/hr$$

PPH Error = PPH Indicated - PPH Actual
= 878957 - 838600
= 40357 lbs/hr

%Flow Error = (40357 lbs/hr/5,000,000 lbs/hr) * 100%
= 0.81%

Note: Slight differences in values shown on Attachment 10.7 attributable to rounding.

7.2.3 Process Measurement Error Summary

Note: See Attachment 10.7 for more details

	3840 MWt		
	Actual	Observed	Error
% Flow	PPH	PPH	% Flow
20	838600	879025	0.81
30	1257900	1313913	1.12
40	1677200	1745771	1.37
50	2096500	2165881	1.39
60	2515800	2587174	1.43
70	2935100	3001257	1.32
80	3354400	3404984	1.01
90	3773700	3817781	0.88
100	4193000	4204537	0.23

7.2.4 Process Measurement Error – Normal Power Operation

Several reviews of Plant Historian data were performed to collect actual pressure variations between 95% to 100% power for consideration of process measurement error during normal operation. Computer points A2175 (Reactor Power) and A2578 (Reactor Narrow Range Pressure) were monitored. Two 1 hour average samples were taken from Jan. 1 – Jan. 23 and from Feb. 1 – Feb. 23. In addition, two other 30 minute average samples were taken from May 20 – May 31 and from July 1 – July 12. In all cases, the pressure varied only from between 1010 psia to 1020 psia. For conservatism, pressure variations of ± 10 psi will be considered from 1020 psia.

Specific Gravity at 1010 psia [Positive Uncertainties]

$SVF_{1010\ psia} = 0.4410328\ ft^3/lb$

Specific Gravity at 1030 psia [Negative Uncertainties]

$SVF_{1030\ psia} = 0.4314618\ ft^3/lb$

Specific Gravity at Reference (1020 psia)

$SVF_{REF} = 0.4362025\ ft^3/lb$

PMA = h1[(SVF2/SVF1) – 1]

Where SVF1 is at the calibration base and SVF2 is at actual conditions.

3840 MWt

<u>+ Uncertainties (@100% Flow)</u>

PMA = 2152.58 [(0.4410328/0.4362025) – 1]
PMA = 23.84 inwc

Observed h = 2152.58 + 23.84 = 2176.42 inwc

W = $359*(C/((1-\beta^4)^{1/2}))*Ya*d^2*Fa*(h*Den)^{1/2}$
= 4216070 lbs/hr

PPH Error = PPH Indicated - PPH Actual
= 4216070 - 4193000
= 23070 lbs/hr

%Flow Error = (23070 lbs/hr / 5,000,000 lbs/hr) * 100%
= +0.46%

<u>- Uncertainties (@100% Flow)</u>

PMA = 2152.58 [(0.4314618/0.4362025) – 1]
PMA = -23.39 inwc

Observed h = 2152.58 - 23.39 = 2129.19 inwc

W = $359*(C/((1-\beta^4)^{1/2}))*Ya*d^2*Fa*(h*Den)^{1/2}$
= 4170073 lbs/hr

PPH Error = PPH Indicated - PPH Actual
= 4170073 - 4193000
= -22927 lbs/hr

%Flow Error = (-22927 lbs/hr / 5,000,000 lbs/hr) * 100%
= -0.46%

PMA Error during normal operation will be taken as ± 0.46%.

7.3 Calculation of Transmitter Uncertainty (Safety Related)
Section 5.2.2

7.3.1 Transmitter Accuracy (RA_{XMTR})

Per design inputs, the vendor accuracy (3 sigma) including the combined effects of linearity, hysteresis, and repeatability is ± 0.25% span.

RA_{XMTR} = ± 0.25% span (3 sigma)
RA_{XMTR} = ± (2/3) * 0.25% span
RA_{XMTR} = ± 0.17% span (2 sigma)

7.3.2 Transmitter Drift (DR_{XMTR})

Per design inputs, the vendor specified drift (2 sigma) over 30 months is ± 0.2% of Upper Range Limit. The drift interval is less than 30 months, therefore, the drift in terms of percent of calibrated span (267.73 psi) is as follows:

DR_{XMTR} = ± 0.2% (300 psi/267.73 psi)
DR_{XMTR} = ± 0.22% span

7.3.3 Transmitter Temperature Effects Normal (TE_{XMTR}) and Accident (ATE_{XMTR})

<u>Normal Temperature Effect</u>

The vendor specification for Temperature Effect is ± (0.75% URL + 0.50% span) for a 100°F temperature change (3 sigma).

Per Environmental Parameters (Section 5.1.2), the normal temperature variation inside this area of the building will range from 75°F to 88°F. Therefore, the maximum normal temperature span is 13°F (88°F-75°F).

TE_{XMTR} = ± [(0.75% (300 psi/267.73 psi) + 0.50%)](13°F/100°F)
TE_{XMTR} = ± 0.17% span (3 sigma)
TE_{XMTR} = ± (2/3) * 0.17% span
TE_{XMTR} = ± 0.11% span (2 sigma)

7.3.4 Transmitter Static Pressure Effects (SPE_{XMTR})

The static pressure zero shift is ± 0.5% URL/1000 psi uncertainty (3 sigma) per Section 5.2.2.

SPE_{ZERO} = ± (0.5%) (300 psi/267.73 psi) * (1000 psig/1000 psi)
SPE_{ZERO} = ± 0.56% span (3 sigma)

The static pressure span effect is calibrated out per Attachment 10.1; however, there still exists ± 0.5% reading/1000 psi uncertainty (3 sigma) associated with the correction of the span effect.

SPE_{SPAN} = ± (0.5%) 1000 psig/1000 psi
SPE_{SPAN} = ± 0.5% span (3 sigma)

$SPE_{XMTR} = \pm (2/3) * (0.56\%^2 + 0.5\%^2)^{0.5}$
SPE_{XMTR} = ± 0.50% span (2 sigma)

7.3.5 Transmitter Overpressure Effects (OPE_{XMTR})

Overpressure Effects are applicable to the Rosemount Transmitter only if the device will be pressurized beyond the specified design pressure. The maximum pressure rating for a Range Code 7 transmitter is 2000 psig. Per GE Nuclear Energy Project Task Report for Hope Creek Generating Station Extended Power Uprate (Ref. 3.4.29, 3.4.30) the dome pressure is remaining at 1020 psia, so the design rating will not be exceeded and the Overpressure Effect is not applicable.

OPE_{XMTR} = ± 0% span

7.3.6 Transmitter Power Supply Effects (PS_{XMTR})

PSE specified is 0.005% URL/Volt and the uncertainty is one magnitude smaller than the other uncertainties. Therefore, the error due to power supply variation is negligible.

PS_{XMTR} = ± 0% span

7.3.7 Transmitter Humidity Effects (HE_{XMTR})

Per the transmitter design inputs, the humidity limits for this unit are 0-100% RH (NEMA 4X) with no additional uncertainty provided by the vendor. Therefore, no Humidity Effect is considered applicable.

HE_{XMTR} = ± 0% span

7.3.8 Transmitter RFI/EMI Effects (REE_{XMTR})

No RFI or EMI Effects were provided by the vendor. Per the Salem Setpoint Technical Standard (Ref. 3.4.2), when no effect is provided by the vendor for this effect, it may be considered not applicable.

REE_{XMTR} = ± 0% span

7.3.9 Transmitter Seismic Effect (SE_{XMTR})

Per Section 5.2.2, the seismic uncertainty is 0.5% URL (2 sigma) during and after a seismic event.

SE_{XMTR} = ± 0.5% (300 psi/267.73 psi)
SE_{XMTR} = ± 0.56% span

7.3.10 Transmitter Calibration Tolerance (CAL_{XMTR})

CAL_{XMTR} = ± 1.414 * VA_{XMTR}
CAL_{XMTR} = ± 1.414 * 0.25%
CAL_{XMTR} = ± 0.35% span

CAL_{XMTR} = ± 0.35% * 16 mAdc
CAL_{XMTR} = ± 0.056 mAdc ≈ 0.06 mAdc

Per sensor calibration procedures (Ref. 3.5.1 - 3.5.16), Calibration Tolerance for the transmitters is established at ± 0.06 mAdc.

7.3.11 Transmitter Radiation Uncertainty Normal (RE_{XMTR}) and Accident (ARE_{XMTR})

Per Section 5.1.2, the normal radiation exposure is 8.8E2 Rads TID. This is considered a mild environment per Reference 3.4.6; therefore, any radiation effect will be adjusted out during calibration.

$RE_{XMTR} = \pm 0\%$

7.3.12 Transmitter M&TE Accuracy (MTE_{XMTR})

Per sensor calibration procedures (Ref. 3.5.1 - 3.5.16), the transmitters are calibrated using a test gauge with an accuracy of at least ± 0.25% span and a Keithley DMM. Total device M&TE uncertainty is the SRSS combination of the input and output M&TE uncertainties:

Keithley DMM, 4-20 mAdc Measurements
The temperature coefficient is ±0.1 * applicable 1 year accuracy specification (for between 0°-18°C and 28°-50°C)/°C (Attachment 10.5). The accuracy specification for a 20 mAdc range is given as ± (0.1% rdg + 15 counts). The highest ambient temperature (Section 5.1.2) is 88°F or 31.1°C, and the lowest temperature is 75°F or 23.9°C; therefore, the maximum temperature variation is 3.1°C (31.1 – 28).

Keithley Accuracy = (0.1%*20 mAdc + .000015 mAdc)/16 mAdc * (1+0.1*3.1)
= 0.164% span

$MTE_{DMM} = \pm 0.164\%$ span (0-20 mAdc range)

MTE1 = ± 0.25% span (test gauge)
MTE2 = ± 0.164% span (DMM)

$MTE_{XMTR} = \pm [(MTE1)^2 + (MTE2)^2]^{1/2}$
$MTE_{XMTR} = \pm [(0.25\%)^2 + (0.164\%)^2]^{1/2}$
$MTE_{XMTR} = \pm 0.299\%$ span

7.3.13 Transmitter Steam Pressure/Temperature Effect (SPT_{XMTR})

Since the transmitters are rated for normal operating limits of up to 200°F and elevated temperature during accident conditions is below this value, the Accident Temperature Effect is used in lieu of Steam Pressure/Temperatures effect.

$SPT_{XMTR} = \pm 0\%$ span

7.3.14 Total Transmitter Uncertainty - Normal, Accident (XMTR)

All random, independent uncertainties associated with the Transmitter are combined below using the SRSS method of error combination to determine the Total Transmitter Uncertainty for Normal conditions. For all conditions, the Calibration Tolerance was used in lieu of Reference Accuracy since it is the more limiting value.

Normal

$XMTR = \pm [CAL_{XMTR}^2 + DR_{XMTR}^2 + TE_{XMTR}^2 + SPE_{XMTR}^2 + SE_{XMTR}^2 + RE_{XMTR}^2 + MTE_{XMTR}^2]^{1/2}$

$XMTR = \pm [(0.35)^2 + (0.22)^2 + (0.11)^2 + (0.50)^2 + (0)^2 + (0)^2 + (0.299)^2]^{1/2}$

$XMTR = \pm 0.72\%$ dP span

Accident

$XMTR = \pm [CAL_{XMTR}^2 + DR_{XMTR}^2 + TE_{XMTR}^2 + SPE_{XMTR}^2 + SE_{XMTR}^2 + MTE_{XMTR}^2]^{1/2}$

$XMTR = \pm [(0.35)^2 + (0.22)^2 + (0.11)^2 + (0.50)^2 + (0.56)^2 + (0.299)^2]^{1/2}$

$XMTR = \pm 0.91\%$ dP span

7.3.15 Recalibration Tolerance (Recal)

$Recal_{XMTR} = \pm (Cal^2 + VA^2)^{1/2}$

$Recal_{XMTR} = \pm \{(0.35\%)^2 + (0.25\%)^2\}^{1/2}$

$Recal_{XMTR} = \pm 0.43\%$ span

In Signal Units $\pm$ 0.43% x 16 mAdc span = $\pm$ 0.069 mAdc $\approx$ 0.07 mAdc

7.4 Calculation of Trip Unit Uncertainty
Section 5.2.3

7.4.1 Trip Unit Accuracy (RA_{TU})

Per design inputs, the vendor accuracy includes the combined effects of adjustability (A) of ± 0.01 mA and repeatability (R) of ± 0.20% span.

A_{TU} = ± 0.01/16 x 100% Span
± 0.0625% span

RA_{TU} = $\pm (A_{TU}^2 + R_{TU}^2)^{1/2}$
$\pm (0.0625^2 + 0.20^2)^{1/2}$
± 0.21% span @ 3 sigma

RA_{TU} = ± 0.21% (2/3)
± 0.14% Span @ 2 sigma

7.4.2 Temperature Effect (TE_{TU})

Per Environmental Parameters (Section 5.1.2), the normal temperature variation inside this area of the building will range from 66-78°F. As the vendor specified operational limits are 40-104°F, any effect due to temperature changes within the operational limit range is considered negligible.

TE_{TU} = ± 0%

7.4.3 Humidity Effect (HE_{TU})

The trip units are located in an area where humidity is maintained at the vendor specified operational limits of 20-60% RH. No additional error due to humidity will be assumed.

HE_{TU} = ± 0%

7.4.4 Power Supply Effect (PSE_{TU})

The channels are powered by redundant regulated power supplies which are not expected to exceed the vendor specified operating range of 23.5 – 26.5 Vdc. Therefore, no uncertainty for power supply effect will be included in the calculation.

PSE_{TU} = ± 0%

7.4.5 Static Pressure Effect (SPE_{TU})

Static pressure is not considered for these devices as they have no direct process connection.

SPE_{TU} = ± 0%

7.4.6 RFI/EMI Effects (REE_{TU})

The RFI/EMI effects are considered to be negligible based upon the area being zoned, operational limitations and cabling design of HCGS.

REE_{TU} = ± 0%

7.4.7 Radiation Effects (RE_{TU})

These trip units are located in an environment where radiation is not expected to exceed 2E2 rad TID. Since mild environmental limit is 1E3 rad TID, and these trip units are not expected to be subject to radiation exceeding this limit – no evaluation of effects is considered for normal conditions.

RE_{TU} = ± 0%

7.4.8 Seismic Effect (SE_{TU})

Per vendor specifications, no effect due to a seismic event is presented at less than a ZPA of 11g's. The trip units are located and mounted in a manner that will not experience a seismic event exceeding the specified conditions. This analysis considers no seismic effects.

SE_{TU} = ± 0%

7.4.9 Overpressure Effect (OPE_{TU})

These devices have no direct process connection. No effect due to overpressure will be considered in this analysis.

OPE_{TU} = ± 0%

7.4.10 Calibration Tolerance (Cal_{TU})

$CAL_{TU} = \pm VA_{TU}$

$CAL_{TU} = \pm 0.21\%$ Span

In Signal Units $\pm$ 0.21% x 16 mAdc Span = $\pm$ 0.0336 mAdc $\approx$ 0.03 mAdc

Per channel calibration procedures (Ref. 3.5.17 - 3.5.32), Calibration Tolerance for the Trip Units is conservatively established one sided at 0.03 mAdc.

7.4.11 Trip Unit M&TE Accuracy (MTE_{TU})

Per Reference 3.5.17 - 3.5.32, the trip units are calibrated by a Fluke model number 8600A for the M&TE. S-C-ZZ-EEE-0625 (Ref. 3.4.28) calculated an M&TE accuracy of 0.05% span for a Fluke 8600A. Any other inaccuracies attributable to the digital calibrator will be considered negligible for the overall results. Therefore;

$MTE_{TU} = \pm 0.05\%$ span (DMM)

7.4.12 Specified Drift

$DR_{TU} = \pm 0.20$ % Span for 180 Days (PD)

Calibration period P = 675 Days

$DR_{TU} = \pm (0.20)\ (P/PD)^{1/2}$

$DR_{TU} = \pm (0.20)\ (675/180)^{1/2}$

$DR_{TU} = \pm 0.39\%$ Span

7.4.13 Total Device Uncertainty

Each effect is considered a random variable, statistically independent of the others. Therefore, they can be combined using SRSS.

$TU = \pm (CAL_{TU}^2 + MTE_{TU}^2 + DR_{TU}^2)^{1/2}$

$TU = \pm \{(0.21)^2 + (0.05)^2 + (0.39)^2\}^{1/2}$

$TU = \pm 0.45\%$ Span

7.4.14 Recalibration Tolerance (Recal)

$Recal_{TU} = \pm \{(Cal)^2 + (VA)^2\}^{1/2}$

$Recal_{TU} = \pm (0.21^2 + 0.21^2)^{1/2}$

$Recal_{TU} = \pm 0.30\%$ Span

In Signal Units: $\pm 0.30\% \times 16$ mAdc Span $= \pm 0.048$ mAdc ≈ 0.05 mAdc

Per channel calibration procedures (Ref. 3.5.17 - 3.5.32) Recalibration Tolerance for the Trip Units is conservatively established one sided at 0.05 mAdc.

7.5 Calculation of Transmitter Uncertainty (Non-Safety Related)
Section 5.2.4

Note: All values are expressed as 2 sigma per Section 5.2.4. Accident effects are not applicable for the calculation of Non-Safety Related instrumentation; therefore, Accident Temperature Effects, Seismic Effects and Radiation Effects will be excluded from this section.

7.5.1 Transmitter Accuracy (RA_{XMTR})

Per design inputs, the vendor accuracy including the combined effects of linearity, hysteresis, and repeatability is ± 0.1% span.

RA_{XMTR} = ± 0.1% span

7.5.2 Transmitter Drift (DR_{XMTR})

Per design inputs, the vendor specified drift is ± 0.25% of Upper Range Limit for 6 months. The drift interval is based on a calibration frequency of 675 days. Therefore, the drift in terms of percent of calibrated span (116.82 psi) is as follows:

$DR_{XMTR} = \pm [0.25 * (300 \text{ psi}/116.82 \text{ psi})] * (675/180)^{1/2}$

DR_{XMTR} = ± 1.24% span

7.5.3 Transmitter Temperature Effects (TE_{XMTR})

Per transmitter design inputs, the vendor specified temperature effect is ± [(0.5% x URL) +(0.5% x span)]% span per 100°F temperature change.

Per Section 5.1.2, the minimum and maximum ambient temperature range is 75°F to 88°F; therefore the maximum temperature deviation is 13°F (88 – 75).

$TE_{XMTR} = \pm [(0.5\% * (300 \text{ psi}/116.82 \text{ psi})) + 0.5\%] * (88 - 75)/100$
TE_{XMTR} = ± 0.23% span

7.5.4 Transmitter Static Pressure Effects (SPE_{XMTR})

The static pressure zero shift is ± 0.25% URL/2000 psi uncertainty per Section 5.2.4.

SPE_{ZERO} = ± (0.25%) (300 psi/116.82 psi) * (1000 psig/2000 psi)
SPE_{ZERO} = ± 0.32% span

The static pressure span effect is calibrated out per Attachment 10.1; however, there still exists a ± 0.25% reading/1000 psi uncertainty associated with the correction of the span effect.

SPE_{SPAN} = ± (0.25%) 1000 psig/1000 psi
SPE_{SPAN} = ± 0.25% span

$SPE_{XMTR} = \pm (0.32\%^2 + 0.25\%^2)^{0.5}$
SPE_{XMTR} = ± 0.41% span

7.5.5 Transmitter Overpressure Effects (OPE_{XMTR})

Overpressure Effects are applicable to the Rosemount Transmitter only if the device will be pressurized beyond the specified design pressure. The maximum pressure rating for the transmitter is 2000 psig. Per GE Nuclear Energy Project Task Report for Hope Creek Generating Station Extended Power Uprate (Ref. 3.4.29, 3.4.30) the dome pressure is remaining at 1020 psia, so the design rating will not be exceeded and the Overpressure Effect is not applicable.

OPE_{XMTR} = ± 0% span

7.5.6 Transmitter Power Supply Effects (PS_{XMTR})

PSE specified is 0.005% URL/Volt; therefore, the error due to power supply variation is negligible.

PS_{XMTR} = ± 0% span

7.5.7 Transmitter Humidity Effects (HE_{XMTR})

Per the transmitter design inputs, the humidity limits for this unit are 0-100% RH (NEMA 4X) with no additional uncertainty provided by the vendor. Therefore, no Humidity Effect is considered applicable.

HE_{XMTR} = ± 0% span

7.5.8 Transmitter RFI/EMI Effects (REE_{XMTR})

No RFI or EMI Effects were provided by the vendor. Per the Salem Setpoint Technical Standard (Ref. 3.4.2), when no effect is provided by the vendor for this effect, it may be considered not applicable.

REE_{XMTR} = ± 0% span

7.5.9 Transmitter Calibration Tolerance (CAL_{XMTR})

CAL_{XMTR} = ± 1.414 * VA_{XMTR}
CAL_{XMTR} = ± 1.414 * 0.1%
CAL_{XMTR} = ± 0.14% span

CAL_{XMTR} = ± 0.14% * 16 mAdc
CAL_{XMTR} = ± 0.0224 mAdc ≈ 0.03 mAdc

This is a new transmitter and the sensor calibration procedures (Ref. 3.5.38 - 3.5.41) need to be revised to establish the Calibration Tolerance at ± 0.03 mAdc.

CAL_{XMTR} = ± (0.03 mAdc / 16 mAdc) * 100%
CAL_{XMTR} = ± 0.19% span

The calibration tolerance will be used in lieu of the reference accuracy as this is the larger of the two terms (Reference 3.4.1).

7.5.10 Transmitter M&TE Accuracy (MTE_{XMTR})

Per sensor calibration procedures (Ref. 3.5.38 - 3.5.41), the transmitters are calibrated using a test gauge with an accuracy of at least ± 0.25% span and a Keithley DMM. Total device M&TE uncertainty is the SRSS combination of the input and output M&TE uncertainties:

Keithley DMM, 4-20 mAdc Measurements
The temperature coefficient is ±0.1 * applicable 1 year accuracy specification (for between 0°-18°C and 28°-50°C)/°C (Attachment 10.5). The accuracy specification for a 20 mAdc range is given as ± (0.1% rdg + 15 counts). The highest ambient temperature (Section 5.1.2) is 88°F or 31.1°C, and the lowest temperature is 75°F or 23.9°C; therefore, the maximum temperature variation is 3.1°C (31.1 – 28).

Keithley Accuracy = (0.1%*20 mAdc + .000015 mAdc)/16 mAdc * (1+0.1*3.1)
= 0.164% span

MTE_{DMM} = ± 0.164% span (0-20 mAdc range)

MTE1 = ± 0.25% span (test gauge)
MTE2 = ± 0.164% span (DMM)

$MTE_{XMTR} = \pm [(MTE1)^2 + (MTE2)^2]^{1/2}$
$MTE_{XMTR} = \pm [(0.25\%)^2 + (0.164\%)^2]^{1/2}$
MTE_{XMTR} = ± 0.299% span

7.5.11 Total Transmitter Uncertainty – Normal (XMTR)

All random, independent uncertainties associated with the Transmitter are combined below using the SRSS method of error combination to determine the Total Transmitter Uncertainty for Normal conditions. For all conditions, the Calibration Tolerance was used in lieu of Reference Accuracy since it is the more limiting value.

Normal

$XMTR = \pm [CAL_{XMTR}^2 + DR_{XMTR}^2 + TE_{XMTR}^2 + SPE_{XMTR}^2 + MTE_{XMTR}^2]^{1/2}$
$XMTR = \pm [(0.19)^2 + (1.24)^2 + (0.23)^2 + (0.41)^2 + (0.299)^2]^{1/2}$

XMTR = ± 1.37% span

7.5.12 Recalibration Tolerance (Recal)

$Recal_{XMTR} = \pm (CAL^2 + VA^2)^{1/2}$

$Recal_{XMTR} = \pm \{(0.19\%)^2 + (0.1\%)^2\}^{1/2}$

$Recal_{XMTR} = \pm 0.21\%$ span

In Signal Units ± 0.21% x 16 mAdc span = ± 0.0336 mAdc ≈ 0.04 mAdc

This is a new transmitter and the sensor calibration procedures (Ref. 3.5.38 - 3.5.41) need to be revised to establish a recalibration tolerance of ± 0.04 mAdc.

7.6 Calculation of Interface Module Uncertainty (Input)

(Specification from Section 5.2.5)

7.6.1 Input Interface Module Accuracy (RA_{IM_IN})

Per design inputs, the input channel accuracy is ± 0.05% span and the input linearity is ± 0.0125% span.

$RA_{IM} = \pm (0.05^2 + 0.0125^2)$
$RA_{IM} = \pm 0.052\%$ span

7.6.2 Interface Module Temperature Effect (TE_{IM})

The temperature effect is included in the accuracy of the device.

$TE_{IM} = \pm 0\%$ span

7.6.3 Interface Module Humidity Effect (HE_{IM})

The module is located in an area where humidity is controlled. No additional error due to humidity will be assumed.

$HE_{IM} = \pm 0\%$ span

7.6.4 Interface Module Power Supply Effect (PSE_{IM})

No power supply uncertainty was supplied by the vendor. Since this effect is not published and these effects are typically small, the power supply effect is considered insignificant with respect to the other interface module uncertainties.

$PSE_{IM} = \pm 0\%$ span

7.6.5 Interface Module Drift (DR_{IM})

Per Design Inputs, drift is not applicable for this module.

$DR_{IM} = \pm 0\%$ span

7.6.6 Interface Module Calibration Tolerance (CAL_{IM})

A loop calibration is performed (Ref. 3.5.37 - 3.5.41) for the Indicator and Computer Point; therefore, Calibration Tolerance will be addressed during calculation of the output devices.

$CAL_{IM} = \pm 0\%$ span

7.6.7 Interface Module M&TE Accuracy (MTE_{IM})

A loop calibration is performed (Ref. 3.5.37 - 3.5.41) for the Indicator and Computer Point; therefore, M&TE Accuracy will be addressed during calculation of the output devices.

$MTE_{IM} = \pm 0\%$ span

7.6.8 Total Interface Module Uncertainty (IM)

Each effect is considered a random variable, statistically independent of the others. Therefore, they can be combined using SRSS:

$IM_{IN} = \pm (RA_{IM}^2 + DR_{IM}^2 + TE_{IM}^2)^{1/2}$
$IM_{IN} = \pm (0.052^2 + 0^2 + 0^2)^{1/2}$
$IM_{IN} = \pm 0.052\%$ span

7.7 Calculation of Interface Module Uncertainty (Output)

(Specification from Section 5.2.5)

7.7.1 Output Interface Module Accuracy (RA_{IM})

Per design inputs, the output channel accuracy is ± 0.05% span and the output linearity is ± 0.025% span.

$RA_{IM} = \pm (0.05^2 + 0.025^2)$
$RA_{IM} = \pm 0.056\%$ span

7.7.2 Interface Module Temperature Effect (TE_{IM})

The temperature effect is included in the accuracy of the device.

$TE_{IM} = \pm 0\%$ span

7.7.3 Interface Module Humidity Effect (HE_{IM})

The module is located in an area where humidity is controlled. No additional error due to humidity will be assumed.

$HE_{IM} = \pm 0\%$ span

7.7.4 Interface Module Power Supply Effect (PSE_{IM})

No power supply uncertainty was supplied by the vendor. Since this effect is not published and these effects are typically small, power supply effect is not considered.

$PSE_{IM} = \pm 0\%$ span

7.7.5 Interface Module Drift (DR_{IM})

Per Design Inputs, drift is not applicable for this module.

$DR_{IM} = \pm 0\%$ span

7.7.6 Interface Module Calibration Tolerance (CAL_{IM})

A loop calibration is performed (Ref. 3.5.37 - 3.5.41) for the Indicator and Computer Point; therefore, Calibration Tolerance will be addressed during calculation of the output devices.

$CAL_{IM} = \pm 0\%$ span

7.7.7 Interface Module M&TE Accuracy (MTE_{IM})

A loop calibration is performed (Ref. 3.5.37 - 3.5.41) for the Indicator and Computer Point; therefore, M&TE Accuracy will be addressed during calculation of the output devices.

$MTE_{IM} = \pm 0\%$ span

7.7.8 Total Interface Module Uncertainty (IM)

Each effect is considered a random variable, statistically independent of the others. Therefore, they can be combined using SRSS:

$IM_{OUT} = \pm (RA_{IM}^2 + DR_{IM}^2 + TE_{IM}^2)^{1/2}$
$IM_{OUT} = \pm (0.056^2 + 0^2 + 0^2)^{1/2}$
$IM_{OUT} = \pm 0.056\%$ span

7.8 Calculation of Indicator Uncertainty

(Section 5.2.6)

7.8.1 Indicator Accuracy (RA_{FI})

RA_{FI} = ±0.5% span

7.8.2 Temperature Effect (TE_{FI})

The temperature effect is stated for 40°F to 120°F. Per Environmental Parameters (Section 5.1.2), the normal temperature variation inside this area of the building will range from 66°F to 78°F; therefore, no additional error is applicable.

TE_{FI} = ± 0.4% span

7.8.3 Humidity Effect (HE_{FI})

The humidity is controlled for the control area, so no effects will be considered.

HE_{FI} = ± 0% span

7.8.4 Power Supply Effect (PSE_{FI})

The power supply effect is stated as ± 0.3% span for a ± 2 Vdc shift from 24 Vdc. Any additional power supply effect is considered negligible.

PSE_{FI} = ± 0.3% span

7.8.5 RFI/EMI Effects (REE_{FI})

The RFI/EMI effects are considered to be negligible based upon the area being zoned, operational limitations and cabling design of HCGS.

REE_{FI} = ± 0% span

7.8.6 Readability (RD_{FI})

Per Section 6.4, readability is ½ the smallest demarcation. Per Section 5.2.6, the smallest increments are 10,000 lbs/hr; therefore, readability is:

RD = ± ½ * (10,000/5,000,000) * 100
RD = ± 1.00% span (bias)

7.8.7 Indicator Calibration Tolerance (CAL_{FI})

$CAL_{FI} = VA_{FI} = RA_{FI}$

CAL_{FI} = ± 0.5% span

In Signal Units: ± 0.5% x 4 Vdc span = ± 0.020 Vdc

7.8.8 Indicator M&TE Accuracy (MTE_{FI})

Keithley DMM, 1-5 Vdc Measurements
The temperature coefficient is ±0.1 * applicable 1 year accuracy specification (for between 0°-18°C and 28°-50°C)/°C (Attachment 10.5). The accuracy specification for a 20 Vdc range is given as ± (0.015% rdg + 3 counts). The highest ambient temperature (Section 5.1.2) is 78°F or 25.6°C, and the lowest temperature is 66°F or 18.9°C; therefore, no temperature effects will be considered.

Keithley Accuracy = (0.015%*20 Vdc + .003 Vdc)/4 Vdc
= 0.15% span

MTE_{DMM} = ± 0.15% span (0-20 Vdc range)

7.8.9 Indicator Drift (DR_{FI})

There is no published specification value for drift. The maximum drift noted in the review of the As-Left/As-Found data summarized in Attachment 10.2 of Reference 3.4.37 was 0.48% of span; therefore, drift is established as 0.5% span.

DR_{FI} = ± 0.5% span

7.8.10 Total Device Accuracy

Each effect is considered a random variable, statistically independent of the others unless otherwise shown. Therefore, they can be combined using SRSS:

$A_{FI} = \pm (RA^2 + TE^2 + PSE^2 + DR^2 + MTE^2)^{1/2} + RD$
$A_{FI} = \pm (0.5^2 + 0.4^2 + 0.3^2 + 0.5^2 + 0.15^2)^{1/2} + 1.0$
$A_{FI} = \pm 0.88\%$ span (Random) $\pm 1.0\%$ (Bias)

7.8.11 Recalibration Tolerance (Recal)

$Recal_{FI} = \pm (CAL^2 + VA^2)^{1/2}$

$Recal_{FI} = \pm \{(0.5\%)^2 + (0.5\%)^2\}^{1/2}$

$Recal_{FI} = \pm 0.71\%$ span

In Signal Units $\pm$ 0.71% x 4 Vdc span = $\pm$ 0.028 Vdc

7.9 Calculation of Recorder Uncertainty
(Section 5.2.7)

7.9.1 Recorder Accuracy (RA_{FR})

Per the design inputs, reference accuracy is an all inclusive accuracy value for the recorder. The new Honeywell Minitrend V5 recorders have an accuracy of ±0.1% span. The calculation will assume an accuracy of ±0.5% span as a bounding value. This value corresponds to the calibration tolerance.

RA_{FR} = ±0.5% span

7.9.2 Readability (RD_{FR})

Per Section 0, the resolution is read to 0.01 MLB/HR; therefore, readability is taken as 0.005 MLH/HR and is treated as a bias.

RD_{FR} = ± (0.005/20) * 100
RD_{FR} = ± 0.025% span

7.9.3 Total Recorder Accuracy

FR = ±0.5% span (Random) ± 0.025% (Bias)

7.10 Calculation of Computer Uncertainty

7.10.1 Computer Accuracy (RA_{COMP})

Computer point accuracy is dependent on the significant change limit setting which is the minimum input change required before the computer point is converted to engineering units. This error is considered a random, independent error. The computer points are code 3 which corresponds to a significant change limit of 0.5% (Ref. 3.4.40). Therefore, the computer point accuracy based on the significant change limit setting is:

$$RA_{Sig_Chg_Limit} = \pm 0.5\% \text{ span @ 2 Sigma}$$

An additional error of 0.25% (RA_{MSCL}) will be included to account for any other miscellaneous effects associated with the accuracy of the computer per Assumption 6.2.

$$RA_{MSCL} = \pm 0.25\% \text{ span @ 2 Sigma}$$

Therefore, the overall accuracy of the computer point is:

$$RA_{COMP} = \pm [(RA_{Sig_Chg_Limit})^2 + (RA_{MSCL})^2]^{1/2}$$

$$RA_{COMP} = \pm [(0.5)^2 + (0.25)^2]^{1/2}$$

$$RA_{COMP} = \pm 0.56\% \text{ span}$$

7.11 Propagation of Error

7.11.1 High Steam Flow Trip

The High Steam Flow Trip Loops do not utilize square root extraction; therefore, all values are calculated in psid units.

Total Loop Accuracy (TLA_L):

$$TLA = \pm (XMTR^2 + TU^2 + PEA^2)^{0.5} + PMA$$

<u>3840 MWt</u>

$$TLA = \pm (0.91^2 + 0.45^2 + 2.41^2)^{0.5} + 0.66$$
$$= \pm 3.28\% \text{ span}$$

$$TLA = \pm 3.28\% * 267.73 \text{ psid}$$
$$= \pm 8.78 \text{ psid}$$

7.11.2 Flow Indication

Channel Uncertainties (@ 100% Flow Rate) - 3840 MWt

Bias Uncertainties

PMAb = + 0.23% flow span (bias) at rated flow of 4193000 lbs/hr (Section 7.2.3)

Indicator Uncertainty

Utilizing the formula for flow propagation as stated in the Salem Setpoint Technical Standard (Ref. 3.4.1), the channel uncertainty at the output of the Indicator is calculated at the 100% rated flow.

$c = \pm [((a/2C)^2 + PEA^2 + e^2)^{1/2} + (PMAb)]$

c = uncertainty in the output signal(s) (Indicator o in % flow)
a = uncertainty in the input signal(s), excluding bias terms (in % dP)

C = Output signal (flow rate stated as [% flow rate/100]) = 4193000/5000000 = 0.84
e = inherent uncertainty of the device (Indicator)

$INDo = + [((XMTR/2C)^2 + (IM_{IN}/2C)^2 + IM_{OUT}^2 + PEA^2 + IND^2)^{1/2} + PMAb + INDb]$

$INDo = + [((1.37/(2x0.84))^2 + [((0.052/(2x0.84))^2 + 0.056^2 + 1.68^2 + 0.88^2)^{1/2} + 0.23 + 1.0]$
INDo = + 3.30% flow span

INDo = + 3.30% * 50 E5 lbs/hr
INDo = + 165000 lbs/hr

$INDo = - [((XMTR/2C)^2 + (IM_{IN}/2C)^2 + IM_{OUT}^2 + PEA^2 + IND^2)^{1/2} + PMAb + INDb]$

$INDo = - [((1.37/(2x0.84))^2 + [((0.052/(2x0.84))^2 + 0.056^2 + 1.68^2 + 0.88^2)^{1/2} + 0 + 1.0]$
INDo = - 3.07% flow span

INDo = - 3.07% * 50 E5 lbs/hr
INDo = - 153500 lbs/hr

The following Tables summarize the uncertainties for indication at various flow rates:

3840 MWt

% Flow	PPH	PEA % Flow	PMA % Flow +	2C	Ind Out % Span	
20	838600	0.34	0.81	0.34	6.01	-5.20
30	1257900	0.50	1.12	0.50	5.03	-3.91
40	1677200	0.67	1.37	0.67	4.70	-3.33
50	2096500	0.84	1.39	0.84	4.43	-3.04
60	2515800	1.01	1.43	1.01	4.34	-2.91
70	2935100	1.17	1.32	1.17	4.20	-2.88
80	3354400	1.34	1.01	1.34	3.92	-2.91
90	3773700	1.51	0.88	1.51	3.85	-2.97
100	4193000	1.68	0.23	1.68	3.30	-3.07

Per Channel Calibration Procedures (Ref. 3.5.38 - 3.5.41), a loop calibration for the indicators is performed by applying an input of 19.13 psig and reading a desired output of 20.5 Mlb/hr (20.0 – 21.0). For this calculation, input would be 31.59 psig at desired reading would be 25.5 Mlb/hr (Attachment 10.1, Section 6.6). The new loop tolerance on Attachment 10.1 can be determined as follows:

$C = 25.5/50 = 0.51$

$$\begin{aligned} CalTol &= [(XMTR_{CAL}/2C)^2 + (IM_{IN}/2C)^2 + IM_{OUT}^2 + IND_{CAL}^2]^{1/2} \\ &= [(0.141/2*0.51)^2 + (0.052/2*0.51)^2 + 0.056^2 + 0.5^2]^{1/2} \\ &= 0.52\% \text{ Flow Span} = 0.26 \times E05 \text{ lb/hr} \end{aligned}$$

This value is rounded up to 0.5 x E05 lb/hr due to readability limitations.

7.11.3 Computer Points A2609 – A2611 Flow Indication

Channel Uncertainties (@ 100% Flow Rate) - 3840 MWt

Bias Uncertainties

PMAb = + 0.23% flow span (bias) at rated flow of 4193000 lbs/hr (Section 7.2.3)

Computer Uncertainty

The formula from the previous section is slightly rearranged as follows for the determination of the computer uncertainty:

$$COMPo = + [((XMTR/2C)^2 + (IM_{IN}/2C)^2 + IM_{OUT}^2 + PEA^2 + COMP^2)^{1/2} + PMAb]$$

$$COMPo = + [((1.37/(2x0.84))^2 + [((0.052/(2x0.84))^2 + 0.056^2 + 1.68^2 + 0.56^2)^{1/2} + 0.23]$$
COMPo = + 2.18% flow span

COMPo = + 2.18% * 5.0 E05 lb/hr
COMPo = + 109000 lbs/hr

$$COMPo = - [((XMTR/2C)^2 + (IM_{IN}/2C)^2 + IM_{OUT}^2 + PEA^2 + COMP^2)^{1/2} + PMAb]$$

$$COMPo = - [((1.37/(2x0.84))^2 + [((0.052/(2x0.84))^2 + 0.056^2 + 1.68^2 + 0.56^2)^{1/2} + 0]$$
COMPo = - 1.95% flow span

COMPo = - 1.95% * 5.0 E05 lb/hr
COMPo = - 97500 lbs/hr

The following Tables summarize the uncertainties for the computer indication at various flow rates (Note, small variations between the values in the table and the ones calculated above are due to rounding differences):

3840 MWt

% Flow	PPH	PEA % Flow	PMA % Flow	2C	Computer % Span	
20	838600	0.34	0.81	0.34	4.95	-4.14
30	1257900	0.50	1.12	0.50	3.95	-2.83
40	1677200	0.67	1.37	0.67	3.60	-2.23
50	2096500	0.84	1.39	0.84	3.31	-1.92
60	2515800	1.01	1.43	1.01	3.22	-1.79
70	2935100	1.17	1.32	1.17	3.07	-1.75
80	3354400	1.34	1.01	1.34	2.79	-1.78
90	3773700	1.51	0.88	1.51	2.73	-1.85
100	4193000	1.68	0.23	1.68	2.18	-1.95

Per Channel Calibration Procedures (Ref. 3.5.38 - 3.5.41), a loop calibration for the computer points is performed by applying an input of 19.13 psig and reading a desired output of 2.05 Mlb/hr (2.03 – 2.07). For this calculation, input would be 31.59 psig at desired reading would be 25.55 Mlb/hr (Attachment 10.1, Section 6.6). The new loop tolerance on Attachment 10.1 can be determined as follows:

$C = 2.55/5 = 0.51$

$$\begin{aligned} CalTol &= [(XMTR_{CAL}/2C)^2 + (IM_{IN}/2C)^2 + IM_{OUT}^2 + COMP_{CAL}^2]^{1/2} \\ &= [(0.141/2*0.51)^2 + (0.052/2*0.51)^2 + 0.056^2 + 0.25^2]^{1/2} \\ &= 0.29\% \text{ Flow Span} = 0.015 \text{ Mlb/hr or } 0.02 \text{ Mlb/hr} \end{aligned}$$

7.11.4 Total Flow Recorder

The signals from all four Main Steam flow transmitters are processed by the DFCS (square rooted and summed) and sent to the Total Steam Flow Recorder and computer. The random uncertainties associated with each flow loop will be calculated as follows under the SRSS method through the DFCS input module:

$DFCSin = \pm [(XMTR/2C)^2 + (IM_{IN}/2C)^2 + PEA^2)]^{0.5}$

The individual loop random uncertainties (4 loops) will then be combined under the SRSS method. Since the bias terms are common to all four loops they will only be accounted for once.

$RECo = \pm \{[(4 * DFCSin^2)^{0.5}]^2 + IM_{OUT}^2 + REC^2\}^{0.5} + PMb + RECb$

<u>Channel Uncertainties (@ 100% Flow Rate) - 3840 MWt</u>

$DFCSin = \pm [((XMTR/2C)^2 + (IM_{IN}/2C)^2 + PEA^2)^{1/2}$

$DFCSin = \pm [(1.37\%/(2*0.84))^2 + (0.052\%/(2*0.84))^2 + 1.68\%^2)]^{1/2}$

$DFCSin = \pm 1.87\%$ span

The span of each of the four input loops is 0 to 5 Mlb/hr and the span of the DCFS output is 20 Mlb/hr (4 * 5 Mlb/hr). Therefore, all of the random uncertainties associated with the 0 – 5 Mlb/hr inputs need to be divided by four since the output span is four times greater. The formula now becomes:

$RECo = \pm ((((4 * DFCSin^2)^{0.5})/4)^2 + IM_{OUT}^2 + REC^2)^{0.5} + PMAb + RECb$

$RECo = \pm ((((4 * 1.87\%^2)^{0.5})/4)^2 + 0.056\%^2 + 0.5\%^2)^{0.5} + 0.23\% \pm 0.025\%$

RECo = + 1.32% span / - 1.09% span

Or expressed in terms of engineering units:

RECo = + 1.32% * 20.0 Mlb/hr / - 1.09% * 20.0 Mlb/hr

RECo = + 264000 lb/hr / - 218000 lb/hr

The following Tables summarize the uncertainties for the Total Steam Flow Recorder at various flow rates (Note, small variations between the values in the table and the ones calculated above are due to rounding differences):

3840 MWt

% Flow	PPH	PEA % Flow	PMA % Flow	2C	DFCSin	Rec Out % Span	
20	838600	0.34	0.81	0.34	4.10	2.95	-2.14
30	1257900	0.50	1.12	0.50	2.77	2.62	-1.50
40	1677200	0.67	1.37	0.67	2.15	2.59	-1.22
50	2096500	0.84	1.39	0.84	1.84	2.46	-1.08
60	2515800	1.01	1.43	1.01	1.69	2.44	-1.02
70	2935100	1.17	1.32	1.17	1.66	2.32	-1.00
80	3354400	1.34	1.01	1.34	1.69	2.02	-1.01
90	3773700	1.51	0.88	1.51	1.76	1.93	-1.04
100	4193000	1.68	0.23	1.68	1.87	1.32	-1.09

7.11.5 Rod Worth Minimizer Setpoint

The signals from all four Main Steam flow transmitters are processed by the DFCS (square rooted and summed) to provide a signal for Total Steam Flow. Total Steam Flow is used to represent Core Thermal Power as shown in Attachment 10.1. PEA and PMA uncertainties at 20% flow are considered bounding. The random uncertainties associated with each flow loop will be calculated as follows under the SRSS method through the DFCS input module:

$$DFCSin = \pm [(XMTR/2C)^2 + (IM_{IN}/2C)^2 + PEA^2)]^{0.5}$$

The individual loop random uncertainties (4 loops) will then be combined under the SRSS method. Since the bias terms are common to all four loops they will only be accounted for once.

$$RECo = \pm \{[(4 * DFCSin^2)^{0.5}]^2 + IM_{OUT}^2\}^{0.5} + PMb$$

<u>Channel Uncertainties (@ 7.55% Total Flow Rate)*</u>

$$DFCSin = \pm [((XMTR/2C)^2 + (IM_{IN}/2C)^2 + PEA^2)^{1/2}$$

$$DFCSin = \pm [(1.37\%/(2*0.0755))^2 + (0.052\%/(2*0.0755))^2 + 0.34\%^2)]^{1/2}$$

$$DFCSin = \pm 9.09\% \text{ span}$$

The span of each of the four input loops is 0 to 5 Mlb/hr and the span of the DCFS output is 20 Mlb/hr (4 * 5 Mlb/hr). Therefore, all of the random uncertainties associated with the 0 – 5 Mlb/hr inputs need to be divided by four since the output span is four times greater. The formula now becomes:

$$RWMo = \pm ((((4 * DFCSin^2)^{0.5})/4)^2 + IM_{OUT}^2)^{0.5} + PMAb$$

$$RWMo = \pm ((((4 * 9.09\%^2)^{0.5})/4)^2 + 0.056\%^2)^{0.5} + 0.81\%$$

$$RWMo = \pm 5.36\% \text{ span}$$

Or expressed in terms of engineering units:

$$RWMo = \pm 5.36\% * 20.0 \text{ Mlb/hr}$$

$$RWMo = \pm 1072000 \text{ lb/hr}$$

*Note: See Attachment 10.1, Section 6.8 for determination of % Flow Rate

8.0 CALCULATION OF SETPOINTS

8.1 Establishment of Allowable Values and Trip Setpoints

ISA ISA-RP67.04.02-2000 (Ref. 3.4.4) defines three methods that have been used to determine the allowable value and trip setpoints for instrument loops. The GE Instrument setpoint methodology which predates the ISA standard used a method to establish the AV and trip setpoint that conforms most closely to ISA Method 2. The channel instrument accuracy, channel calibration accuracy, process measurement accuracy, and primary element accuracy errors were all included in the allowance for the Analytical Limit and Allowable Value and used to establish the Allowable Value. GE then established the Nominal Trip Setpoint by including an allowance for channel instrument drift. The difference between the methods is that GE included more terms (Channel instrument accuracy and channel calibration accuracy) in the allowance considered between the Analytical Limit and Allowable Value. This was conservative since this increases the allowance between the AV and AL. GE determines the AV and Nominal Trip Setpoint based on a single sided distribution.

8.1.1 Margin Determination

8.1.1.1 Substantiate the Margin between the Analytical Limit and the Setpoint.

Margin = (AL – CU) - SP

Where:

CU = ± 8.78 psid (from Section 7.11.1)

AL = 176.2 psid (from Attachment 10.1, Section 4.3)

SP = 162.8 psid (from Attachment 10.1, Section 4.3)

Margin = (176.2 psid – 8.78 psid) - 162.8 psid
= 4.62 psid

A positive margin exists between the Analytical Limit and the actual Setpoint including Uncertainties; therefore, the calculated Setpoints are acceptable.

8.1.1.2 Substantiate the Margin between the Analytical Limit and the Allowable Value.

Accident Uncertainties (Seismic Event, No harsh environmental conditions)
The Technical Specification Allowable Value will be evaluated at 1.645 standard deviations from the Analytical Limit to obtain the desired 95% probability.

$$CU = \pm (PEA^2 + SE_T^2)^{1/2} + PMA$$
$$CU = \pm (1.645/2)\{(2.41)^2 + (0.56)^2\}^{1/2} + 0.66$$

$$CU = \pm 2.695\% \text{ span or } 6.787 \text{ inwc}$$

and
Margin = (AL – CU) - AV

Where:

CU = ± 6.787 psid (from above)

AL = 176.2 psid (from Attachment 10.1, Section 4.3)

AV = 169.3 psid (from Attachment 10.1, Section 4.3)

Margin = (176.2 psid – 6.787 psid) – 169.3 psid
= 0.113 psid

A positive margin exists between the Analytical Limit and the Allowable Value including Uncertainties; therefore, there is adequate margin.

8.1.2 Acceptable Values

Technical Standard DE-TS.ZZ-1001 (Ref. 3.4.1) provides guidance on determining a "band of acceptability". See Section 8.2.15 of the Technical Standard. The band of acceptability is commonly referred to as an acceptable value and is determined by the SRSS combination of the component calibration effect, drift, and accuracy at normal conditions. The Calibration Effect term accounts for calibrating equipment or M&TE errors. Calculations prepared recently have begun determining actual M&TE effects consistent with current industry standards and guidance. The Acceptable Value(s) are determined as follows:

Transmitter

$$\text{Acceptable Value}_{Unc} = \pm \{(CAL)^2 + (MTE)^2 + (DR)^2]^{1/2}$$
$$= \pm \{(0.35)^2 + (0.299)^2 + (0.22)^2\}^{1/2}$$
$$= \pm 0.51\% \text{ span or } 0.082 \text{ mAdc}$$

$$\text{Acceptable Value}_{xmtr} = SP + AV_{Unc}$$
$$= 13.853 \text{ mAdc} \pm 0.082 \text{ mAdc for N086A/B, N087A/B, N088C/D, N089A/B}$$
$$= 13.852 \text{ mAdc} \pm 0.082 \text{ mAdc for N086C/D, N087C/D, N089C/D}$$

Trip Unit

$$\text{Acceptable Value}_{Unc} = \pm \{(CAL)^2 + (MTE)^2 + (DR)^2]^{1/2}$$
$$= \pm \{(0.21)^2 + (0.05)^2 + (0.39)^2\}^{1/2}$$
$$= \pm 0.446\% \text{ span or } 0.071 \text{ mAdc}$$

$$\text{Acceptable Value}_{TU} = SP + AV_{Unc}$$
$$= 13.729 \text{ mAdc} \pm 0.071 \text{ mAdc}$$

Currently, procedures HC.IC-SC.AB-0001 -16(Q) and HC.IC-CC.AB-0001 -16(Q) have Acceptable Values that were originally derived based on guidance from SH.MD-DG.ZZ-009(Z). Hope Creek Procedure HC.MD-DG.ZZ-0009(Z) (Ref. 3.5.48) was recently issued to be specific for Hope Creek plant. Hope Creek Procedure HC.MD-DG.ZZ-0009(Z) provides guidance for calculating an Acceptable Value based on 80% of the design specification value or the distance between the NTSP and the Allowable Value. The desk guide is used when appropriate engineering documentation (i.e. calculation) does not exist. In this case, the calculation will provide new Acceptable Values based on Technical Standard DE-TS.ZZ-1001(Q).

Based on the results above the Acceptable Value used for trip unit calibration should be revised to 13.729 mAdc ± 0.071 mAdc. The Acceptable Value Band for the transmitter calibration should be 13.852 mAdc ± 0.082 mAdc or 13.853 mAdc ± 0.082 mAdc depending on the transmitter . See Section 9.5.1.

8.2 Setpoint Presentation - Main Steam High Flow Trip (3840 MWt EPU)

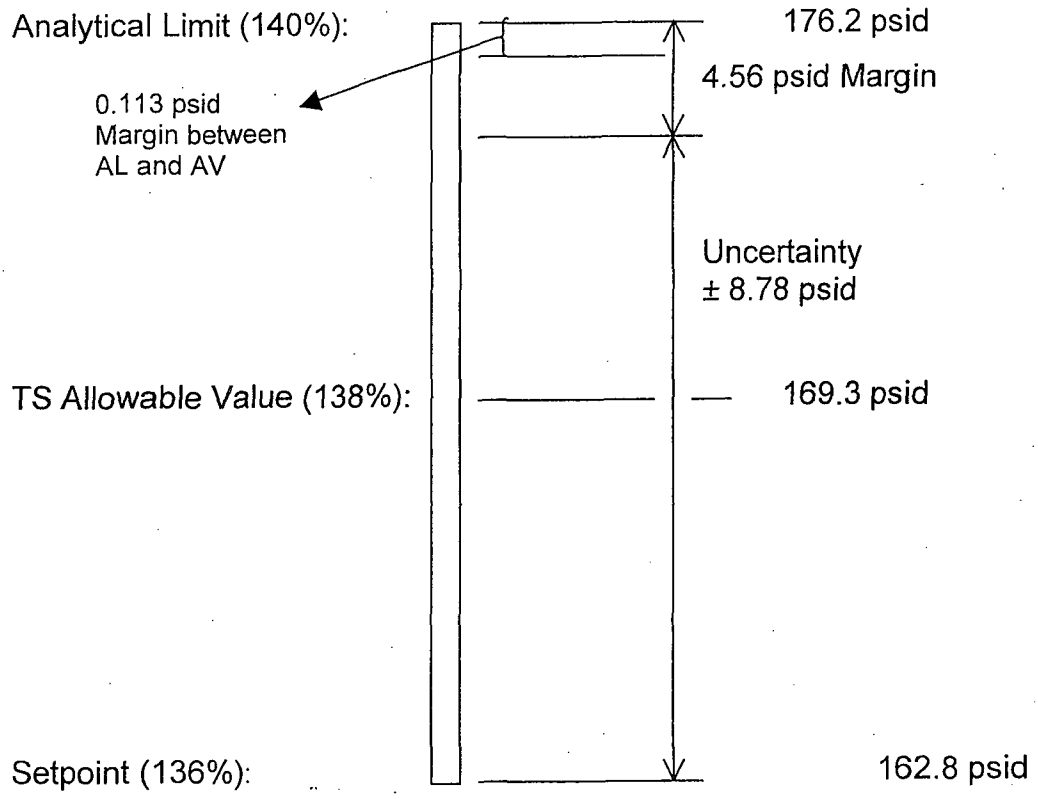

ORIGINATOR:	DATE:	REVIEWER:	DATE:	VERIFIER:	DATE:
A. Shaul	12/2/05	B. Yu	12/2/05	B. Yu	12/2/05

Setpoint Presentation – Rod Worth Minimizer (3840 MWt)

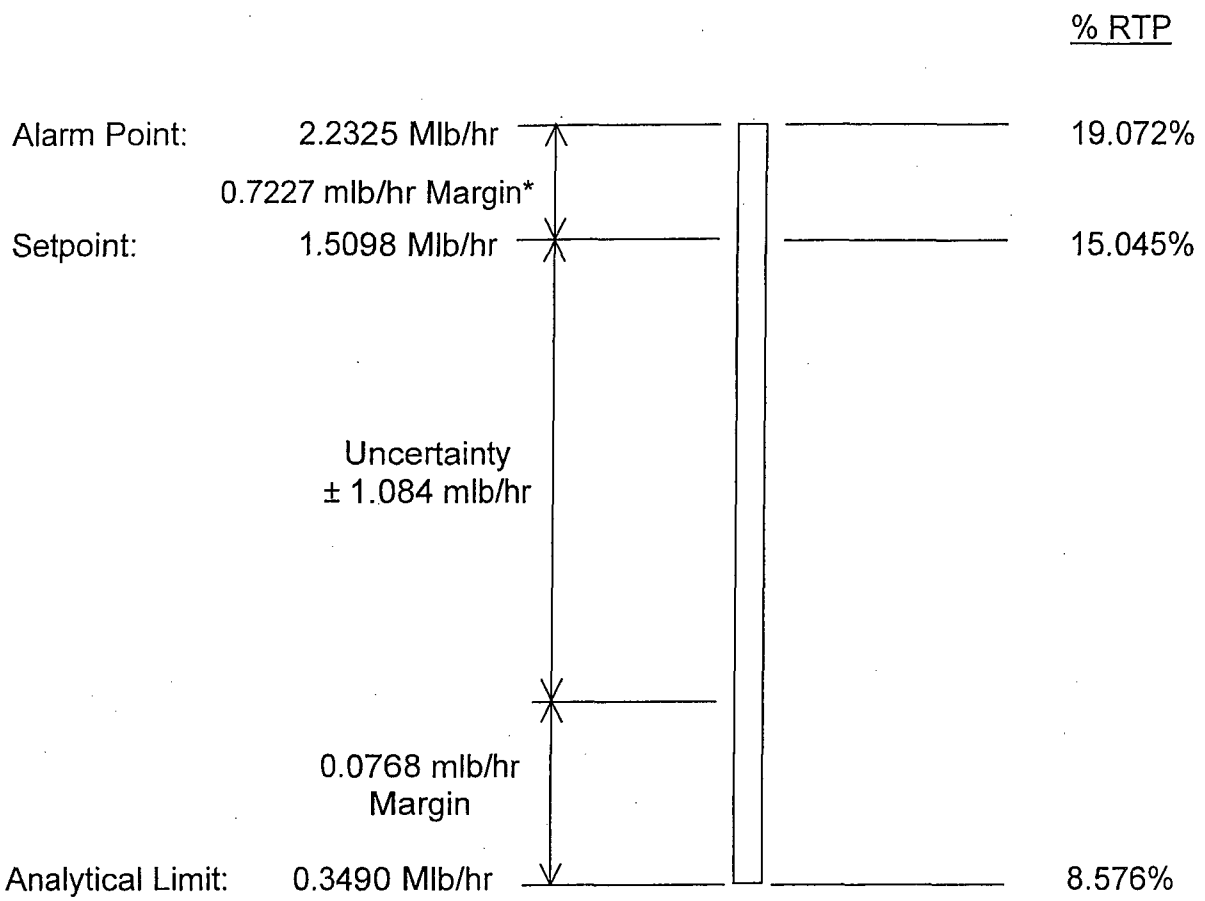

Note: The 0.7227 Mlb/hr difference between the setpoint and alarm is considered margin since all the instrument uncertainties are applicable to both trip signals except for the Output Interface Modules which is deemed insignificant.

9.0 SUMMARY OF RESULTS

9.1 Main Steam High Flow Trip

The Safety Related Main Steam flow instrumentation loops are designed to provide automatic closure of the Main Steam Line Isolation Valves (MSIV) and MSIV Drain Valves. As demonstrated in Section 8.2, there is adequate **margin** to ensure the initiation of this trip will occur prior to reaching the analytical limit.

The existing Safety Related instrumentation is capable of being re-scaled/calibrated to accommodate the new range requirements.

9.2 RWM Setpoint

There is adequate **margin** to ensure the initiation of this trip will occur prior to reaching the analytical limit.

9.3 Normal Operation

The upper range of the existing Non-Safety Related transmitters for the Digital Feedwater Control System is not adequate for the new required range. It is necessary to replace these transmitters with Rosemount 1151DP7 transmitters. In addition, the existing Bailey 775 indicators will require a new scale plate with a range of 0 to 5,000,000 lb/hr and the computer points and GETARS will require rescaling to 0 to 5,000,000 lb/hr. The Total Steam Flow recorder, computer point and GETARS will require recalibration to a range of 0 to 20,000,000 lb/hr.

The uncertainties are summarized in Section 7.11.2 through 7.11.4 at various flow ranges for normal operation.

9.4 Input/ Output Documents

A change to any of the listed Input Calculations may affect this calculation and require a revision to this calculation. It follows that any changes to this calculation could affect and may require changes to the listed Output Calculations (none). Any changes are shown in the sections for Impacted Station Implementing Procedures or Other Documents Affected.

Input Calculations
1. GE Project Task Report, Task T0506 (Ref. 3.4.22)
2. GE Project Task Report, Task T0300 (Ref. 3.4.29)
3. GE Project Task Report, Task T0100 (Ref. 3.4.30)
4. GE Project Task Report, Task T0504 (Ref. 3.4.31)
5. GE Project Task Report, Task T0904 (Ref. 3.4.32)

Output Calculations
None

9.5 Impacted Station Implementing Procedures

9.5.1 The following procedures require scaling revision per Attachment 10.1:

Acceptable Values
The Acceptable Value used for the trip unit calibration is currently ≤15.71 mAdc and based on the method in Procedure HC.MD-DG.ZZ-0009(Z) (Ref. 3.5.48). The Acceptable Value for the trip units should be changed to 13.729 mAdc ± 0.071 based on the Hope Creek Technical Standard and new scaling. The Acceptable Value Band for the transmitter calibrations should also be changed to 13.853 mAdc ± 0.082 mAdc or 13.852 mAdc ± 0.082 mAdc depending on the transmitter. It was also noted that the Acceptable Value for the transmitter calibration is now ≥15.47 mAdc at the setpoint. The application is an increasing process so the Acceptable Value should have been ≤ 15.47 mAdc in the direction away from the Allowable Value.

HC.IC-SC.AB-0001 through 0016 (Ref. 3.5.1 - 3.5.16)

HC.IC-SC.AB-0001
CP No. 80048085, AD P157R0, SAP Order Oper. No. 1010

HC.IC-SC.AB-0002
CP No. 80048085, AD P158R0, SAP Order Oper. No. 1010

HC.IC-SC.AB-0003
CP No. 80048085, AD P159R0, SAP Order Oper. No. 1010

ORIGINATOR:	DATE:	REVIEWER:	DATE:	VERIFIER:	DATE:
J.Almonte / M. Richers	03/19/07	J. Metro	03/21/07	J. Metro	03/21/07

HC.IC-SC.AB-0004
CP No. 80048085, AD P160R0, SAP Order Oper. No. 1010

HC.IC-SC.AB-0005
CP No. 80048085, AD P161R0, SAP Order Oper. No. 1010

HC.IC-SC.AB-0006
CP No. 80048085, AD P162R0, SAP Order Oper. No. 1010

HC.IC-SC.AB-0007
CP No. 80048085, AD P163R0, SAP Order Oper. No. 1010

HC.IC-SC.AB-0008
CP No. 80048085, AD P164R0, SAP Order Oper. No. 1010

HC.IC-SC.AB-0009
CP No. 80048085, AD P165R0, SAP Order Oper. No. 1010

HC.IC-SC.AB-0010
CP No. 80048085, AD P166R0, SAP Order Oper. No. 1010

HC.IC-SC.AB-0011
CP No. 80048085, AD P167R0, SAP Order Oper. No. 1010

HC.IC-SC.AB-0012
CP No. 80048085, AD P168R0, SAP Order Oper. No. 1010

HC.IC-SC.AB-0013
CP No. 80048085, AD P169R0, SAP Order Oper. No. 1010

HC.IC-SC.AB-0014
CP No. 80048085, AD P170R0, SAP Order Oper. No. 1010

HC.IC-SC.AB-0015 (Ref. 3.5.1)
CP No. 80048085, AD P171R0, SAP Order Oper. No. 1010

HC.IC-SC.AB-0016
CP No. 80048085, AD P172R0, SAP Order Oper. No. 1010

HC.IC-CC.AB-0001 through 0016 (Ref. 3.5.17 - 3.5.32)

HC.IC-CC.AB-0001
CP No. 80048085, AD P140R0, SAP Order Oper. No. 1010

HC.IC-CC.AB-0002
CP No. 80048085, AD P141R0, SAP Order Oper. No. 1010

HC.IC-CC.AB-0003
CP No. 80048085, AD P142R0, SAP Order Oper. No. 1010

HC.IC-CC.AB-0004
CP No. 80048085, AD P143R0, SAP Order Oper. No. 1010

HC.IC-CC.AB-0005
CP No. 80048085, AD P144R0, SAP Order Oper. No. 1010

HC.IC-CC.AB-0006
CP No. 80048085, AD P145R0, SAP Order Oper. No. 1010

HC.IC-CC.AB-0007
CP No. 80048085, AD P146R0, SAP Order Oper. No. 1010

HC.IC-CC.AB-0008
CP No. 80048085, AD P147R0, SAP Order Oper. No. 1010

HC.IC-CC.AB-0009
CP No. 80048085, AD P148R0, SAP Order Oper. No. 1010

HC.IC-CC.AB-0010
CP No. 80048085, AD P149R0, SAP Order Oper. No. 1010

HC.IC-CC.AB-0011
CP No. 80048085, AD P150R0, SAP Order Oper. No. 1010

HC.IC-CC.AB-0012
CP No. 80048085, AD P151R0, SAP Order Oper. No. 1010

HC.IC-CC.AB-0013
CP No. 80048085, AD P152R0, SAP Order Oper. No. 1010

HC.IC-CC.AB-0014
CP No. 80048085, AD P153R0, SAP Order Oper. No. 1010

HC.IC-CC.AB-0015 (Ref. 3.5.1)
CP No. 80048085, AD P154R0, SAP Order Oper. No. 1010

HC.IC-CC.AB-0016
CP No. 80048085, AD P155R0, SAP Order Oper. No. 1010

HC.IC-FT.BB-0068 through 0071 (Ref. 3.5.33 - 3.5.36)

HC.IC-FT.BB-0068
CP No. 80048085, AD P260R0, SAP Order Oper. No. 1010

HC.IC-FT.BB-0069
CP No. 80048085, AD P261R0, SAP Order Oper. No. 1010

HC.IC-FT.BB-0070
CP No. 80048085, AD P262R0, SAP Order Oper. No. 1010

HC.IC-FT.BB-0071
CP No. 80048085, AD P263R0, SAP Order Oper. No. 1010

HC.IC-CC-AE-0012 and HC.IC-SC.AE-0018 through 0021 (Ref. 3.5.37 - 3.5.41)

HC.IC-CC-AE-0012
CP No. 80048085, AD P120R0, SAP Order Oper. No. 1010

HC.IC-SC.AE-0018
CP No. 80048085, AD P126R0, SAP Order Oper. No. 1010

HC.IC-SC.AE-0019
CP No. 80048085, AD P127R0, SAP Order Oper. No. 1010

HC.IC-SC.AE-0020
CP No. 80048085, AD P128R0, SAP Order Oper. No. 1010

HC.IC-SC.AE-0021
CP No. 80048085, AD P129R0, SAP Order Oper. No. 1010

9.5.2 The following procedure requires revision per Attachment 10.9:

HC.RE-FT.ZZ-0002 (Ref. 3.5.44), Attachment 8, needs to be revised to show the new Total Steam Flow versus Core Thermal Power.

HC.RE-FT.ZZ-0002
CP No. 80048085, AD P402, SAP Order Oper. No. 1030

9.5.3 Procedure HC.OP-AR.ZZ-0012 (Ref. 3.5.45) needs to be revised to change the current trip setpoint of ≤ 108.7 psig to the new setpoint of ≤ 162.8 psig.

HC.OP-AR.ZZ-0012
CP No. 80048085, AD P376R0, SAP Order Oper. No. 1020

9.5.4 Procedure HC.OP-DL.ZZ-0026 (Ref. 3.5.46); The Surveillance Log needs to be revised to change the maximum limit value from 108 to 162. The maximum deviation value may remain the same at 14. Refer to page 32 of the procedure, Attachment 1a, Items 69, 70, 71, and 72.

HC.OP-DL.ZZ-0026
CP No. 80048085, AD P384R0, SAP Order Oper. No. 1020

9.5.5 Procedure HC.OP-SO.SF-0003(Q) (Ref. 3.5.47); needs to be revised to change the Low Power Set Point (LPSP) from 17% - 20% power to 15 – 18% power, and the Low Power Alarm Point (LPAP) needs to be changed from 22 – 25% thermal power to 19 – 22% thermal power. Refer to section 3.2.2 of the Procedure. This calculation should be added as a reference to the Procedure.

HC.OP-SO.SF-0003(Q)
CP No. 80048085, AD P303, SAP Order Oper. No. 1020

9.6 Other Documents Affected

9.6.1 Drawings

The existing Bailey 775 indicators will require a new scale plate with a range of 0 to 5,000,000 lb/hr. The following drawings need to be revised to change the range from 42.5 to 50 x 10^5 lbs/hr.

J-200(Q)-C016, Rev. 9, Panel Multi – Indicators Type 775
J-0677-0, Sheet 12, Rev. 4, MCR Standard Scales

The following drawings require revision to show the new Digital Feedwater Control System ranges and setpoints per Attachment 10.1:

H-1-AE-ECS-0128 Sht. 3E, 3N and 3O (Ref. 3.3.9 - 3.3.10 & 3.3.62)
H-1-AE-ECS-0128 Sht. 4 (Ref. 3.3.61)

VTD 317036 Sht 7 (Ref. 3.4.35)

VTD 317036 Sht 8 (Ref. 3.4.36)

9.6.2 ICD Cards require revision to show the new scaling per Attachment 10.1.

1ABFE-N051-B21, 1ABFE-N052-B21, 1ABFE-N053-B21, 1ABFE-N054-B21
1ABPDT-N086A-B21, 1ABPDT-N086B-B21, 1ABPDT-N086C-B21, 1ABPDT-N086D-B21
1ABPDT-N087A-B21, 1ABPDT-N087B-B21, 1ABPDT-N087C-B21, 1ABPDT-N087D-B21
1ABPDT-N088A-B21, 1ABPDT-N088B-B21, 1ABPDT-N088C-B21, 1ABPDT-N088D-B21
1ABPDT-N089A-B21, 1ABPDT-N089B-B21, 1ABPDT-N089C-B21, 1ABPDT-N089D-B21
1AEPDT-N003A-C32, 1AEPDT-N003B-C32, 1AEPDT-N003C-C32, 1AEPDT-N003D-C32
1AEFI-R603A, 1AEFI-R603B, 1AEFI-R603C, 1AEFI-R603D, 1AEFR-R607 Red
1ABPDISH-N686A-B21, 1ABPDISH-N686B-B21,
1ABPDISH-N686C-B21, 1ABPDISH-N686D-B21
1ABPDISH-N687A-B21, 1ABPDISH-N687B-B21,
1ABPDISH-N687C-B21, 1ABPDISH-N687D-B21
1ABPDISH-N688A-B21, 1ABPDISH-N688B-B21,
1ABPDISH-N688C-B21, 1ABPDISH-N688D-B21
1ABPDISH-N689A-B21, 1ABPDISH-N689B-B21,
1ABPDISH-N689C-B21, 1ABPDISH-N689D-B21

9.4.5 The following Computer Points require revision to show the new scaling:

A2609
A2610
A2611
A2612
A1735

GETARS STR050
GETARS STR051
GETARS STR052
GETARS STR053
GETARS STR134

ORIGINATOR:	DATE:	REVIEWER:	DATE:	VERIFIER:	DATE:
A. Shaul	12/2/05	B. Yu	12/2/05	B. Yu	12/2/05

ATTACHMENT 10.1
SCALING CALCULATION

1.0 Purpose

The purpose of this scaling calculation is to recalculate the venturi differential pressure values based on the new EPU flowrates. In addition calibration tables are provided to ensure proper transmitter to bistable input to output relationships.

2.0 References

See main body calculation Section 3.0

3.0 Assumptions

Calibration temperature is established at 68 deg F.

This calculation assumes that where readings are not possible due to resolution of output scales, it is acceptable to round up or down in a conservative manner.

4.0 Calculation

where from Section 5.2.1 unless otherwise noted

C =	0.995	
D =	23.647	
d =	12.911	
Fa =	1.009	(Based on normal temperature of 546°F and Ref. 3.4.38, Fig. II-I-3)
γ =	2.293	(Based on reference pressure of 1020 psia and Steam Tables)
B =	0.5460	(d/D)

4.1 Determination of New Transmitter Span (Tech Spec Transmitters)

The original calibrated span of the transmitter was based on approximately 160% flow. The upper range limit of the transmitter is 300 psid. Based on Attachment 10.3, a span of 267.73 psid is equivalent to 160% flow; therefore, the new span will be based on 160% flow with a DP of 267.73 psid.

From Reference 3.4.30, total steam flow is 16.773 Mlb/hr at 100% power; therefore, for one loop:

100% Flow = 16.773 Mlb/hr / 4
4.193 Mlb/hr

and

160% Flow = 4.193 Mlb/hr * 160%
6.709 Mlb/hr = 267.73 psid

Flow at 160% conservatively rounded similar to GE calculation.

4.2 Determination of New Transmitter Span (DFCS Transmitters)

The original calibrated span of the transmitter was based on approximately 120% flow, with a calibrated span of 76.96 psid equivalent to 4.25 Mlb/hr. The upper range limit of the 1151DP6 is 100 psid. Per Reference 3.4.31, the new LPU range recommendation is 4.5 to 5.0 Mlb/hr. The higher range of 5.0 Mlb/hr has been chosen to be better suited to accommodate uprates up to the LPU value. This will necessitate replacing the transmitters with an 1151DP7 model.

4.2.1 Determination of DP and Ya and W

After a series of iterations, a DP of 116.85 psid was found to be equivalent to 5.0 Mlb/hr flow which is demostrated below:

From Fluid Meters (Ref. 3.4.38)

Assume dp = 116.81925

r = p2 / p1 where p1 is upstream pressure and p2 is downstream pressure
(1020 - 116.81925) / 1020
0.88547

Ya = (r^(2/y)*(y/(y-1))*((1-r^((y-1)/y))/(1-r))*(1-B^4)/(1-B^4*r^(2/y)))^0.5

where y is a constant of 1.255

Ya = (0.88544^(2/1.255)*(1.255/(1.255-1))*((1-0.88544^((1.255-1)/1.255))/(1-0.88544))
*(1-0.5460^4)/(1-0.5460^4*0.88544^(2/1.255)))^0.5

Ya = 0.92173

h = DP * (1728/62.316)
116.81925 * (1728/62.316)
3239.355

W = (359*(C/(1- B^4)^.5)*Ya*d^2*Fa*(h*γ)^0.5)
(359*(0.995/(1- 0.5460^4)^.5)*0.92171*12.911^2*1.009*(3240.187*2.293)^0.5)
5000000 lbs/hr

psid = 116.82

dp of 116.82 psid resulted in 5.0 Mlb/hr flow.

4.3 Determination of New Setpoints

3840 MWt (LPU) Uprate

From Reference 3.4.22, the Setpoint, Allowable Value, and Analytical Limit are:

NTSP =	162.8	psid	based on	136% Flow
AV =	169.3	psid	based on	138% Flow
AL =	176.2	psid	based on	140% Flow

Total Steam Flow =	16.773 mlb/hr			Reference 3.4.30
100% Steam Flow =	16.773 / 4	=	4.19300 Mlb/hr	(rounded)
136% Steam Flow =	4.19300 * 136%	=	5.70248 Mlb/hr	
138% Steam Flow =	4.19300 * 138%	=	5.78634 Mlb/hr	
140% Steam Flow =	4.19300 * 140%	=	5.87020 Mlb/hr	

The following Table summarizes the calculated values utilizing the methodology and formulas shown in Section 4.2.1:

% Flow	lbs/hr	h	r	Ya
100	4.193E+06	2152.582	0.9239	0.9482
136	5.702E+06	4516.719	0.8403	0.8903
138	5.786E+06	4697.884	0.8339	0.8858
140	5.870E+06	4886.733	0.8272	0.8811

5.0 Static Pressure Correction

Ref. 3.4.7 specifies a static pressure correction of +1.25% reading per 1000 psi for the Rosemount Model 1153DB7 Transmitter. The static pressure correction (SPC) for the transmitters is based on an operating pressure of 1005 psig per Section 5.2.1 to minimize transmitter uncertainties during normal system operation. The static pressure correction is calculated as follows:

Correction Factor = +1.25% (1005 psig/1000 psi) = 1.256 % Reading (Range 7)

Ref. 3.4.7 specifies a static pressure correction of +1.05% reading per 1000 psi for the Rosemount Model 1151DP7 Transmitter. The static pressure correction (SPC) for the transmitters is based on an operating pressure of 1005 psig per Section 5.2.1 to minimize transmitter uncertainties during normal system operation. The static pressure correction is calculated as follows:

Correction Factor = +1.05% (1005 psig/1000 psi) = 1.055 % Reading (Range 7)

6.0 Transmitter Scaling

6.1 Transmitters: N086A/B, N087A/B, N088A/B, N088C/D, N089A/B

Manufacturer: Rosemount Static Press Corr. = 1.25 /1000 psi
Model No: 1153DB7 Operating Press = 1005 psi

Head Correction (from Attachment 10.2) 1.4

Input:	0	to	267.73	psid	uncorrected
Input:	1.40	to	269.13	psid	corrected
Output:	4	to	20	mAdc	uncorrected

Correction Factor = +1.25% (1005 psig/1000 psi) = 1.256 % Input

SPC @ min span = (1.256% * 1.4 psid) = 0.0176 psid
SPC @ min span = (0.0176 psid / 267.73 psid) = 0.0070 % span
SPC @ min span = (0.007% * 16 mAdc) + 4 mAdc = 4.001 mAdc

SPC @ max span = (1.256% * 269.13 psid) = 3.3803 psid
SPC @ max span = (3.3803 psid / 267.73 psid) = 1.2630 % span
SPC @ max span = (1.263% * 16 mAdc) + 20 mAdc = 20.202 mAdc

CAL TOL = 0.35 % span RECAL = 0.43 % span

Transmitter Input Range: Input Span: = [I - i]
Min (i) = 1.4 Max (I) = 269.13 Units: psid

Transmitter Output Range: Output Span: = [O - o]
Min (o) = 4.001 Max (O) = 20.202 Units: mAdc

Output = [((Input - i)/Input Span) x (Output Span)] + o

		CAL TOL		RECAL TOL	
INPUT	OUTPUT	0.06 mAdc		0.07 mAdc	
psid	mAdc	From	To	From	To
2	4.037	3.977	4.097	3.967	4.107
68	8.031	7.971	8.091	7.961	8.101
134	12.025	11.965	12.085	11.955	12.095
164.2	13.853	13.793	13.913	13.783	13.923
200	16.019	15.959	16.079	15.949	16.089
260	19.650	19.590	19.710	19.580	19.720

*Acceptable Value is 13.853 (+/-0.082) mAdc

6.2 Transmitters: N086C/D, N087C/D, N089C/D

Manufacturer: Rosemount Static Press Corr. = 1.25 /1000 psi
Model No: 1153DB7 Operating Press = 1005 psi

Head Correction (from Attachment 10.2) 1.5

Input:	0	to	267.73	psid	uncorrected
Input:	1.5	to	269.23	psid	corrected
Output:	4	to	20	mAdc	uncorrected

Correction Factor = +1.25% (1005 psig/1000 psi) = 1.256 % Input

SPC @ min span = (1.25625% * 1.5 psid) = 0.0188 psid
SPC @ min span = (0.01884375 psid / 267.73 psid) = 0.0070 % span
SPC @ min span = (0.007% * 16 mAdc) + 4 mAdc = 4.001 mAdc

SPC @ max span = (1.25625% * 269.23 psid) = 3.3822 psid
SPC @ max span = (3.3822 psid / 267.73 psid) = 1.260 % span
SPC @ max span = (1.26% * 16 mAdc) + 20 mAdc = 20.202 mAdc

CAL TOL = 0.35 % span RECAL = 0.43 % span

Transmitter Input Range: Input Span: = [I - i]
Min (i) = 1.5 Max (I) = 269.23 Units: psid

Transmitter Output Range: Output Span: = [O - o]
Min (o) = 4.001 Max (O) = 20.202 Units: mAdc

Output = [((Input - i)/Input Span) x (Output Span)] + o

		CAL TOL		RECAL TOL	
INPUT	OUTPUT	0.06 mAdc		0.07 mAdc	
psid	mAdc	From	To	From	To
2	4.031	3.971	4.091	3.961	4.101
68	8.025	7.965	8.085	7.955	8.095
134	12.019	11.959	12.079	11.949	12.089
164.3	13.852	13.792	13.912	13.782	13.922
200	16.012	15.952	16.072	15.942	16.082
260	19.643	19.583	19.703	19.573	19.713

*Acceptable Value is 13.852 (+/-0.082) mAdc.

ORIGINATOR:	DATE:	REVIEWER:	DATE:	VERIFIER:	DATE:
A. Shaul	12/2/05	B. Yu	12/2/05	B. Yu	12/2/05

6.3 Transmitters: PDT-N003A/B/C/D

Manufacturer: Rosemount Static Press Corr. = 1.05 /1000 psi
Model No: 1151DP7 Operating Press = 1005 psi

Head Correction (from Attachment 10.2) 1.4

Input:	0	to	116.82	psid	uncorrected
Input:	1.4	to	118.22	psid	corrected
Output:	4	to	20	mAdc	uncorrected

Correction Factor = +1.05% (1005 psig/1000 psi) = 1.06 % Input

SPC @ min span = (1.06% * 1.4 psid) = 0.0148 psid
SPC @ min span = (0.0148 psid / 116.82 psid) = 0.0130 % span
SPC @ min span = (0.013% * 16 mAdc) + 4 mAdc = 4.002 mAdc

SPC @ max span = (1.06% * 118.22 psid) = 1.253 psid
SPC @ max span = (1.2531 psid / 116.82 psid) = 1.073 % span
SPC @ max span = (1.073% * 16 mAdc) + 20 mAdc = 20.172 mAdc

CAL TOL = 0.35 % span RECAL = 0.43 % span

Transmitter Input Range: Input Span: = [I - i]
Min (i) = 1.4 Max (I) = 118.22 Units: psid

Transmitter Output Range: Output Span: = [O - o]
Min (o) = 4.002 Max (O) = 20.172 Units: mAdc

Output = [((Input - i)/Input Span) x (Output Span)] + o

		CAL TOL		RECAL TOL	
INPUT	OUTPUT	0.06 mAdc		0.07 mAdc	
psid	mAdc	From	To	From	To
2	4.085	4.025	4.145	4.015	4.155
30	7.961	7.901	8.021	7.891	8.031
60	12.113	12.053	12.173	12.043	12.183
88	15.989	15.929	16.049	15.919	16.059
116	19.864	19.804	19.924	19.794	19.934

6.4 Trip Units: N686A/B/C/D, N687A/B/C/D, N688A/B/C/D, N689A/B/C/D

Signal Span 4 - 20 mAdc Process Span 267.73 psid at 160% Rated Flow

3840 MWt (LPU) Uprate

Setpoint = 162.8 psid (Rounded down for conservatism)
Tech Spec AV = 169.3 psid (Rounded down for conservatism)

Setpoint in Signal Units (SP):

$$\frac{\text{Setpoint - Process Zero}}{\text{Process Span}} * \text{Signal Span} + \text{Signal Zero}$$

$$SP = \frac{162.8 - 0}{267.73} * 16\text{ mAdc} + 4\text{ mAdc} = 13.729\text{ mAdc}$$

$$AV = \frac{169.3 - 0}{267.73} * 16\text{ mAdc} + 4\text{ mAdc} = 14.118\text{ mAdc}$$

Reset Differential: Note: Minus sign used due to increasing setpoint

Min. Reset Differential = 0.5% span

Reset = Setpoint +/- (Reset Diff * Span)

Reset = 162.8 psid - (0.005 * 267.73 psid) = 161.5 psid

or

Reset = 13.729 mAdc - (0.005 * 16 mAdc) = 13.649 mAdc

	Allowable Value	Cal Tol		ReCal Tol	
		0.03	mA	0.05	mA
	mA	From	To	From	To
TRIP	≤ 14.118	13.699	13.759	13.679	13.779
RESET	N/A	13.619	13.679	13.599	13.699

*Acceptable Value is 13.729 (+/-0.071) mAdc.

6.5 Indication (Trip Units) 1ABPDISHN686A-D(687A-D, 688A-D, 689A-D)-B21

Manufacturer: Rosemount
Model No: 510 DU
Input: 0 to 267.73 psid
Output: 4 to 20 mAdc

CAL TOL = 0.48 mA RECAL TOL = 0.5 mA

Meter displays the input signal from a 4 to 20 mA transmitter with +/- 3% accuracy. (Ref. 3.4.8)
3% * 16 mA = 0.48 mA

Recalibration Tolerance established at 0.50 mAdc slightly greater than the calibration tolerance.

Indication Input Range:
Input Span: = [I - i]

Min	(i)	Max	(I)	Units
i =	0	I =	267.73	psid

Indication Output Range:
Output Span: = [O - o]

Min	(o)	Max	(O)	Units
o =	4	O =	20	mAdc

Output = [((Input - i)/Input Span) x (Output Span)] + o

INPUT	OUTPUT	CAL TOL 0.48 mAdc		RECAL TOL 0.50 mAdc	
		From	To	From	To
0	4.000	3.520	4.480	3.500	4.500
60	7.586	7.106	8.066	7.086	8.086
120	11.171	10.691	11.651	10.671	11.671
180	14.757	14.277	15.237	14.257	15.257
260	19.538	19.058	20.018	19.038	20.038

6.6 Flow Indicator: R603A/B/C/D

Manufacturer: Baily
Model No: Type 775
Input: 0 to 50 X10 E5 lb/hr
Output: 1 to 5 Vdc

CAL TOL = 0.5 % span RECAL TOL = 0.71 % span
0.02 Vdc 0.03 Vdc

Indicator Input Range:
Input Span: = [I - i]

Min	(i)	Max	(I)	Units
i =	0	I =	50	X10 E5 lb/hr

Indicator Output Range:
Output Span: = [O - o]

Min	(o)	Max	(O)	Units
o =	1	O =	5	Vdc

Output = [((Input - i)/Input Span) x (Output Span)] + o

INPUT	OUTPUT	CAL TOL 0.020 Vdc		RECAL TOL 0.030 Vdc	
		From	To	From	To
0	1.000	0.980	1.020	0.970	1.030
10	1.800	1.780	1.820	1.770	1.830
25	3.000	2.980	3.020	2.970	3.030
40	4.200	4.180	4.220	4.170	4.230
50	5.000	4.980	5.020	4.970	5.030

A loop calibration check is also performed with the sensor calibration. One input is applied to the transmitter and the output is at the indicator after the square root conversion.

i = 1.4 I = 118.22 psid from Section 6.3 of this Attachment.
o = 0 O = 50 X10 E5 lb/hr from above.

Output = [((Input - i)/Input Span)^.5 x (Output Span)] + o

Flow Indicator 1AEFI-R603A,B,C,D

Loop Calibration			
Input	Output	Desired Range	
(psi)	x 10 E5 lb/hr	From	To
31.59	25.5	25.0	26.0

A2609, A2610, A2611, A2612 Flow Indication

Loop Calibration			
Input	Output	Desired Range	
(psi)	x 10 E6 lb/hr	From	To
31.59	2.55	2.53	2.57

6.7 Flow Recorder: 1AEFR-R607-C32

Manufacturer: Honeywell
Model No: Minitrend
Input: 0 to 20 mlb/hr
Output: 1 to 5 Vdc

CAL TOL = 0.5 % span RECAL TOL = 0.71 % span
0.02 Vdc 0.028 Vdc

Recorder Input Range:
Input Span: = [I - i]

Min	(i)	Max	(I)	Units
i =	0	I =	20	mlb/hr

Recorder Output Range:
Output Span: = [O - o]

Min	(o)	Max	(O)	Units
o =	1	O =	5	Vdc

Output = [((Input - i)/Input Span) x (Output Span)] + o

INPUT	OUTPUT	CAL TOL 0.02 Vdc		RECAL TOL 0.028 Vdc	
		From	To	From	To
0	1.000	0.980	1.020	0.972	1.028
5	2.000	1.980	2.020	1.972	2.028
10	3.000	2.980	3.020	2.972	3.028
15	4.000	3.980	4.020	3.972	4.028
20	5.000	4.980	5.020	4.972	5.028

6.8 Rod Worth Minimizer Analytical Limit

The current analytical limit is 10% RTP (Ref. 3.2.3, 3.4.22 & 3.4.32). The conversion from Total Steam Flow (TSF)
(in mlb/hr) to % RTP per Attachment 8 of HC.RE-FT.ZZ-0002 (Ref. 3.5.44) can be used as follows to determine the equivalent total steam flow.

% RTP = 7.853 + (6.471 * TSF)

therefore:

TSF = (% RTP - 7.853) / 6.471
TSF = (10 - 7.853) / 6.471
TSF = 0.3318 Mlb/hr

The analytical value remains the same in terms of absolute power and is based on the original thermal licensed power (Ref. 3.4.22 & 3.4.32).

<u>3840 MWt Uprate</u>

The original licensed thermal power is 3293 MWt and the 116.6% OLTP thermal power is 3840 MWt (Ref. 3.4.30); therefore:

% RTP = 10% * (3293 / 3840)
% RTP = 8.576

Note that the above value is the same as presented in T0506 and T0904 (Ref. 3.4.22 & 3.4.32) for LPU.

The new % Reactor Thermal Power (RTP) relationship to Total Steam Flow (TSF) per Attachment 10.9 is:

% RTP = 6.6312 + (5.5727 * TSF) or

TSF = (RTP - 6.6312) / 5.5727
TSF = (8.576 - 6.6312) / 5.5727
TSF = 0.3490 Mlb/hr

Therefore, in terms of % Rated Flow the new setpoint is:

LPSP = (0.349 / 16.773) * 100
LPSP = 2.08 % Total Rated Steam Flow

The flow range has been increased to 20 Mlb/hr; therefore:

LPSP = (0.349 / 20) * 100
LPSP = 1.75 % Span

ORIGINATOR:	DATE:	REVIEWER:	DATE:	VERIFIER:	DATE:
A. Shaul	12/2/05	B. Yu	12/2/05	B. Yu	12/2/05

6.9 Rod Worth Minimizer Setpoint Value

The current setpoint is 8.59% of the flow range of 17 Mlb/hr (Ref. 3.3.9 & 3.3.10); therefore:

LPSP = 0.0859 * 17 Mlb/hr
1.4603 Mlb/hr

The conversion from total steam flow (in Mlb/hr) to % RTP per Attachment 8 of HC.RE-FT.ZZ-0002 (Ref. 3.5.44) is:

% RTP = 7.853 + (6.471 * TSF)
% RTP = 7.853 + (6.471 * 1.4603)
% RTP = 17.303

Therefore, in terms of % Rated Flow the current setpoint is:

LPSP = 1.4603 Mlb/hr
LPSP = (1.4603 / 14.404) * 100
LPSP = 10.14 % Total Rated Steam Flow

Since the analytical limit remains the same in terms of absolute power and is based on the original thermal licensed power (Ref. 3.4.22 & 3.4.32), the setpoint will be determined in the same manner.

<u>3840 MWt Uprate</u>

The current licensed thermal power is 3339 MWt and the 116.6% OLTP thermal power is 3840 MWt (Ref. 3.4.32); therefore:

% RTP = 17.3% * (3339 / 3840)
% RTP = 15.045

The new % Reactor Thermal Power (RTP) relationship to Total Steam Flow (TSF) per Attachment 10.9 is:

% RTP = 6.6312 + (5.5727 * TSF) or

TSF = (RTP - 6.6312) / 5.5727
TSF = (15.045 - 6.6312) / 5.5727
TSF = 1.5098 Mlb/hr

Therefore, in terms of % Rated Flow the new setpoint is:

LPSP = (1.5098 / 16.773) * 100
LPSP = 9.00 % Total Rated Steam Flow

The flow range has been increased to 20 Mlb/hr; therefore:

LPSP = (1.5098 / 20) * 100
LPSP = 7.55 % Span

6.10 Rod Worth Minimizer Alarm Point

Since the AL and setpoint remain the same in terms of absolute power, the alarm point should also remain the same. The current alarm point is 12.8% of the flow range of 17 Mlb/hr (Ref. 3.3.9 & 3.3.10); therefore:

LPAP = 0.128 * 17
2.1760 Mlb/hr

The conversion from total steam flow (in Mlb/hr) to % RTP per Attachment 8 of HC.RE-FT.ZZ-0002 (Ref. 3.5.44) is:

% RTP = 7.853 + (6.471 * TSF)
% RTP = 7.853 + (6.471 * 2.176)
% RTP = 21.934

The alarm point value will also remain the same in terms of absolute power.

<u>3840 MWt Uprate</u>

The current licensed thermal power is 3339 MWt and the 116.6% OLTP thermal power is 3840 MWt (Ref. 3.4.30); therefore:

% RTP = 21.93% * (3339 / 3840)
% RTP = 19.072

The new % Reactor Thermal Power (RTP) relationship to Total Steam Flow (TSF) per Attachment 10.9 is:

% RTP = 6.6312 + (5.5727 * TSF) or

TSF = (RTP - 6.6312) / 5.5727
TSF = (19.072 - 6.6312) / 5.5727
TSF = 2.2325 Mlb/hr

Therefore, in terms of % Rated Flow the new setpoint is:

LPAP = (2.2325 / 16.773) * 100
LPAP = 13.31 % Total Rated Steam Flow

The flow range has been increased to 20 Mlb/hr; therefore:

LPAP = (2.2325 / 20) * 100
LPAP = 11.16 % Span

6.11 Drain Valve Interlock (Ref. 3.4.34, 3.4.35)

Per DFCS Software Description (Ref. 3.3.61), B9 is a calculator block. It performs the logic for the main steam line drain valve interlock, which consists of closing the drain valve when 50% of rated steam flow is measured in each of the four steam lines.

The setpoint for the 1.4% power uprate was calculated as follows:

SP = (Total Rated Steam Flow) / 4 * 50%
(14.387 Mlb/hr / 4) * 50%
1.798375 Mlb/hr

The new setpoint for power uprate are:

<u>3840 MWt Uprate</u>

SP = (Total Rated Steam Flow) / 4 * 50%
(16.773 Mlb/hr / 4) * 50%
(4.193 Mlb/hr) * 50% (rounded TSF/4)
2.096500 Mlb/hr

6.12 Transfer to 3 Element Control Permissive (Ref. 3.1.8)

The UFSAR (Ref. 3.1.8) states the Single Element Control is active when a RFP is in automatic and the start up valve is manual and power is less than 35 percent. It also states Three Element Control is active one minute after a RFP is in automatic and start up valve in manual and power is greater than 35 percent. Therefore, the setpoint is considered a nominal setpoint and is established based on 36.5% RTP and the reset is chosen as 33.5% RTP.

Attachment 10.9 provides the following new Total Steam Flow (TSF) Versus Core Thermal Power Relationships:

RTP = 6.6312 + (5.5727 * TSF) 3840 MWt Uprate

Rearranging the above formula:

TSF = (RTP - 6.6312) / 5.5727
(36.5 - 6.6312) / 5.5727
5.3598 Mlb/hr or stated in percent of Total Steam Flow:

TSF = (5.3598 / 20) * 100
26.8% span

and the reset is:

TSF = (33.5 - 6.6312) / 5.5727
4.8215 Mlb/hr

Stated in percent of Total Steam Flow:

TSF = (4.8215 / 20) * 100
24.1% span

therefore, the deadband is:

DB = 26.8 - 24.1
2.7% span

6.13 Transfer Startup to Manual Mode

The DFCS System Requirements Specifications (Ref. 3.3.63) states the Startup valve may not be placed in automatic mode if Total Steam Flow is greater than 50%; therefore, the transfer from startup to manual setpoint is greater than 50% Total Steam Flow (@51%).

Uprate Value	Rated Flow		
3840 MWt	16.773 Mlb/hr	* 51% =	8.5542 Mlb/hr

and

8.5542 Mlb/hr / 20 * 100% = 42.77 % span

6.14 GETARS

The conversions for GETARS are as follows:

Linear: $Y = M x + B$

Square Root: $Y^2 = M^2 * (x - B)$

where:
- Y = Engineering Unit Value
- M = Slope
- B = Intercept
- x = Computer Counts

The computer counts within GETARS are normalized. With full negative input (-10 Vdc) the counts are -8188. With full positive input (+10 Vdc) the counts are +8192. These values were provided by the GETARS system engineer. The output range is 8 Vdc (Ref. 3.4.42, page 2). The actual counts are calculated as follows:

Negative Input:	0.8 * -8188 =	-6550
Positive Input:	0.8 * 8192 =	6554

6.14.1 1STXY-STR050C32, 1STXY-STR051C32, 1STXY-STR052C32 & 1STXY-STR053C32

PSJ900-001 (Ref. 3.4.42) lists these points as linear

Y = M x + B

Therefore:

Original Basis

4.25 = (M * 6554) + B
0 = (M * -6550) + B

6554M + B = 4.25
-6550M + B = 0
13104M = 4.25

M = (4.25/13104)

M = 0.000324328

and

6554M + B = 4.25
(6554 * 0.000324328) + B = 4.25
B = 4.25 - (6554 * 0.000324328)

B = 2.1244

ORIGINATOR:	DATE:	REVIEWER:	DATE:	VERIFIER:	DATE:
A. Shaul	12/2/05	B. Yu	12/2/05	B. Yu	12/2/05

New Basis

5 = (M * 6554) + B
0 = (M * -6550) + B

6554M + B = 5
-6550M + B = 0
13104M = 5

M = (5 / 13104)

M = 0.000381563

and

6554M + B = 5
(6554 * 0.000381563) + B = 5
B = 5 - (6554 * 0.000381563)

B = 2.4992

Proof:

Y = M x + B

at 5.0 mlb/hr

Y = (0.000381563 * 6554) + 2.4992
5.00 Mlb/hr

at 0 mlb/hr

Y = (0.000381563 * -6550) + 2.4992
0.00 Mlb/hr

6.14.2 1STXY-STR134C32

PSJ900-001 (Ref. 3.4.42) lists these points as linear

Y = Mx + B

Therefore:

Original Basis

17 = (M * 6554) + B
0 = (M * -6550) + B

6554M + B = 17
-6550M + B = 0
13104M = 17

M = 17 / 13104

M = 0.0012973

and

6554M + B = 17
B = 17 - 6554M
B = 17 - (6554 * 0.0012973)

B = 8.49741

ORIGINATOR:	DATE:	REVIEWER:	DATE:	VERIFIER:	DATE:
A. Shaul	12/2/05	B. Yu	12/2/05	B. Yu	12/2/05

New Basis

20 = (M * 6554) + B
0 = (M * -6550) + B

6554M + B = 20
-6550M + B = 0
13104M = 20

M = 20 / 13104

M = 0.0015263

and

6554M + B = 20
B = 20 - 6554M
B = 20 - (6554 * 0.0015263)

B = 9.99695

Proof:

Y = Mx + B

at 20.0 mlb/hr

Y = (0.0015263 * 6554) + 9.99695
20.00 Mlb/hr

at 0 mlb/hr

Y = (0.0015263 * -6550) + 9.99695
0.00 Mlb/hr

HEAD CORRECTION DETERMINATION

			Line No.	Rack/Tubing Drawings	Vlv. No		Piping Dwgs		Venturi	Elev. (ft)	Delta	Corr. Factor	Calculated Head Correction	Current Head Correction	Instrument
PANEL A/B				PN1-H21-P015-0080											
PDT-N088A/B	Hi	A5	4	FSK-JD-1402-1-001-13	511	1-P-AB-250	1-P-AB-264		FE-N053	116.6458					
PDT-N088A/B	Low	A6	3	FSK-JD-1402-1-001-12	510		1-P-AB-262		FE-N053	113.4063	3.239583	2.31	1.4	1.7	PDT-N088A/B
PDT-N089A/B	Hi	A7	2	FSK-JD-1402-1-001-11	515		1-P-AB-265		FE-N054	117.7917					
PDT-N089A/B	Low	A8	1	FSK-JD-1402-1-001-6	514		1-P-AB-263		FE-N054	114.4891	3.302517	2.31	1.4	1.4	PDT-N089A/B
PDT-N003C	Hi	A1	4	FSK-JD-1402-1-001-5					FE-N053	116.6458					
PDT-N003C	Low	A2	3	FSK-JD-1402-1-001-4					FE-N053	113.4063	3.239583	2.31	1.4	1.4	PDT-N003C
PDT-N003D	Hi	A3	2	FSK-JD-1402-1-001-3					FE-N054	117.7917					
PDT-N003D	Low	A4	1	FSK-JD-1402-1-001-1					FE-N054	114.4891	3.302517	2.31	1.4	1.4	PDT-N003D
PANEL C/D				PN1-H21-P025-0071											
PDT-N088C/D	Hi	A3	3	FSK-JD-1402-1-002-10	512	1-P-AB-251	1-P-AB-266		FE-N053	116.5015					
PDT-N088C/D	Low	A4	4	FSK-JD-1402-1-002-9	509		1-P-AB-260		FE-N053	113.1643	3.33724	2.31	1.4	1.2	PDT-N088C/D
PDT-N089C/D	Hi	A5	5	FSK-JD-1402-1-002-7	516		1-P-AB-267		FE-N054	118.0252					
PDT-N089C/D	Low	A6	6	FSK-JD-1402-1-002-5	513		1-P-AB-261		FE-N054	114.4989	3.526259	2.31	1.5	1.5	PDT-N089C/D
				FSK-JD-1402-1-002-4											
				FSK-JD-1402-1-002-3											
				FSK-JD-1402-1-002-1											
PANEL A/B				PN1-H21-P041-0082											
PDT-N086A/B	Hi	A5	2	FSK-JD-1302-1-013-7	503	1-P-AB-248	1-P-AB-256	1-P-AB-279	FE-N051	117.691					
PDT-N086A/B	Low	A6	1	FSK-JD-1302-1-013-6	502		1-P-AB-254	1-P-AB-277	FE-N051	114.4446	3.246392	2.31	1.4	1.4	PDT-N086A/B
PDT-N087A/B	Hi	A7	4	FSK-JD-1302-1-013-5	507		1-P-AB-257	1-P-AB-280	FE-N052	116.7839					
PDT-N087A/B	Low	A8	3	FSK-JD-1302-1-013-4	506		1-P-AB-255	1-P-AB-278	FE-N052	113.5705	3.213325	2.31	1.4	1.5	PDT-N087A/B
PDT-N003A	Hi	A1	2	FSK-JD-1302-1-013-3					FE-N051	117.691					
PDT-N003A	Low	A2	1	FSK-JD-1302-1-013-1					FE-N051	114.4446	3.246392	2.31	1.4	1.4	PDT-N003A
PDT-N003B	Hi	A3	4						FE-N052	116.7839					
PDT-N003B	Low	A4	3						FE-N052	113.5705	3.213325	2.31	1.4	1.4	PDT-N003B
PANEL C/D				PN1-H21-P042-0073											
PDT-N086C/D	Hi	A5	1	FSK-JD-1302-1-018-10	504	1-P-AB-249	1-P-AB-258	1-P-AB-281	FE-N051	117.8542					
PDT-N086C/D	Low	A6	2	FSK-JD-1302-1-018-9	501		1-P-AB-252	1-P-AB-275	FE-N051	114.3229	3.53125	2.31	1.5	0.8	PDT-N086C/D
PDT-N087C/D	Hi	A3	4	FSK-JD-1302-1-018-7	508		1-P-AB-259	1-P-AB-282	FE-N052	116.7604					
PDT-N087C/D	Low	A4	3	FSK-JD-1302-1-018-6	505		1-P-AB-253	1-P-AB-276	FE-N052	113.3405	3.419922	2.31	1.5	1.3	PDT-N087C/D
				FSK-JD-1302-1-018-5											
				FSK-JD-1302-1-018-4											
				FSK-JD-1302-1-018-3											
				FSK-JD-1302-1-018-10											

Note: Minor errors due to neglecting 1/16" or estimating slope may exist; however, elevation determinations are expected to be well within 1" accuracy.
This is deemed negligible due to the span and calibration being in psid (in lieu of inwc).

First, assume Ya is equal to 1

% Flow	W (MPPH)	DP	Y_a	p1	p2	r	Iteration 1 Y_1b	h_a
10	4.193E+05	0.70	1.0000	1020	1019.30	0.9993	0.9995	19.35
20	8.386E+05	2.79	1.0000	1020	1017.21	0.9973	0.9982	77.42
30	1.258E+06	6.28	1.0000	1020	1013.72	0.9938	0.9958	174.19
40	1.677E+06	11.17	1.0000	1020	1008.83	0.9891	0.9926	309.66
50	2.097E+06	17.45	1.0000	1020	1002.55	0.9829	0.9884	483.85
60	2.516E+06	25.13	1.0000	1020	994.87	0.9754	0.9833	696.74
70	2.935E+06	34.20	1.0000	1020	985.80	0.9665	0.9773	948.35
80	3.354E+06	44.67	1.0000	1020	975.33	0.9562	0.9703	1238.66
90	3.774E+06	56.53	1.0000	1020	963.47	0.9446	0.9624	1567.68
100	4.193E+06	69.80	1.0000	1020	950.20	0.9316	0.9535	1935.40
110	4.612E+06	84.45	1.0000	1020	935.55	0.9172	0.9436	2341.84
119.2464	5.000E+06	99.25	1.0000	1020	920.75	0.9027	0.9336	2752.08
120	5.032E+06	100.51	1.0000	1020	919.49	0.9015	0.9328	2786.98
130	5.451E+06	117.95	1.0000	1020	902.05	0.8844	0.9210	3270.83
136	5.702E+06	129.09	1.0000	1020	890.91	0.8734	0.9134	3579.72
138	5.786E+06	132.92	1.0000	1020	887.08	0.8697	0.9108	3685.78
140	5.870E+06	136.80	1.0000	1020	883.20	0.8659	0.9081	3793.39
150	6.290E+06	157.04	1.0000	1020	862.96	0.8460	0.8943	4354.65
160	6.709E+06	178.68	1.0000	1020	841.32	0.8248	0.8794	4954.63

h = (W/(359*(C/((1-B^4)^0.5))*Ya*d^2*Fa))^2/ρ
DP = (h * 62.316)/1728
p2 = p1 - DP
r = p2 / p1
Y_b = (r^(2/gamma)*(gamma/(gamma-1))*((1-r^((gamma-1)/gamma))/(1-r))*(1-Beta^4)/(1-Beta^4*r^(2/gamma)))^0.5

Given:			
	p1 =	1020	From Attachment 10.10
	gamma =	1.255	From Attachment 10.10
	beta =	0.5460	
	constant =	359	From Attachment 10.10
	h =	1497.7	
	C =	0.995	From Attachment 10.10
	D =	23.647	From Attachment 10.10
	d =	12.911	From Attachment 10.10
	Fa =	1.0090	From Attachment 10.10
	ρ =	2.293	From Attachment 10.10

Iterations:

h_b = h_a * (Y_a / Y_b)^2
DP_b = (h_b * 62.316)/1728
r_b = (1020-DP_b)/1020
Y_b2 = (r_b^(2/gamma)*(gamma/(gamma-1))*((1-r_b^((gamma-1)/gamma))/(1-r_b)) *(1-Beta^4)/(1-Beta^4*r_b^(2/gamma)))^0.5

Note: for iteration 3, h_b is calculated using h_b value from iteration 2 as h_a and using the previous iteration's Y_b value as Y_a (typical for other iterations).

	Iteration 2				Iteration 3			
% Flow	h_b	DP_b	r_b	Y_b2	h_b	DP_b	r_b	Y_b3
10	19.37	0.70	0.9993	0.9995	19.37	0.70	0.9993	0.9995
20	77.70	2.80	0.9973	0.9981	77.70	2.80	0.9973	0.9981
30	175.64	6.33	0.9938	0.9958	175.66	6.33	0.9938	0.9958
40	314.30	11.33	0.9889	0.9925	314.37	11.34	0.9889	0.9925
50	495.25	17.86	0.9825	0.9882	495.52	17.87	0.9825	0.9881
60	720.57	25.99	0.9745	0.9828	721.41	26.02	0.9745	0.9827
70	992.94	35.81	0.9649	0.9762	995.13	35.89	0.9648	0.9762
80	1315.64	47.45	0.9535	0.9684	1320.69	47.63	0.9533	0.9683
90	1692.68	61.04	0.9402	0.9593	1703.35	61.43	0.9398	0.9591
100	2128.88	76.77	0.9247	0.9488	2149.97	77.53	0.9240	0.9483
110	2630.05	94.85	0.9070	0.9366	2669.57	96.27	0.9056	0.9356
119.2464	3157.25	113.86	0.8884	0.9237	3225.26	116.31	0.8860	0.9221
120	3203.12	115.51	0.8868	0.9226	3274.11	118.07	0.8842	0.9209
130	3856.38	139.07	0.8637	0.9066	3979.72	143.52	0.8593	0.9035
136	4290.89	154.74	0.8483	0.8958	4460.49	160.86	0.8423	0.8916
138	4443.35	160.24	0.8429	0.8921	4631.60	167.03	0.8362	0.8874
140	4599.78	165.88	0.8374	0.8882	4808.55	173.41	0.8300	0.8830
150	5445.26	196.37	0.8075	0.8671	5791.71	208.86	0.7952	0.8584
160	6407.24	231.06	0.7735	0.8429	6974.14	251.51	0.7534	0.8284

	Iteration 4				Iteration 5			
% Flow	h_b	DP_b	r_b	Y_b4	h_b	DP_b	r_b	Y_b5
10	19.37	0.70	0.9993	0.9995	19.37	0.70	0.9993	0.9995
20	77.70	2.80	0.9973	0.9981	77.70	2.80	0.9973	0.9981
30	175.66	6.33	0.9938	0.9958	175.66	6.33	0.9938	0.9958
40	314.37	11.34	0.9889	0.9925	314.37	11.34	0.9889	0.9925
50	495.53	17.87	0.9825	0.9881	495.53	17.87	0.9825	0.9881
60	721.44	26.02	0.9745	0.9827	721.44	26.02	0.9745	0.9827
70	995.23	35.89	0.9648	0.9762	995.24	35.89	0.9648	0.9762
80	1321.02	47.64	0.9533	0.9683	1321.04	47.64	0.9533	0.9683
90	1704.27	61.46	0.9397	0.9591	1704.35	61.46	0.9397	0.9591
100	2152.30	77.62	0.9239	0.9482	2152.55	77.63	0.9239	0.9482
110	2675.07	96.47	0.9054	0.9355	2675.83	96.50	0.9054	0.9355
119.2464	3236.92	116.73	0.8856	0.9218	3238.92	116.80	0.8855	0.9217
120	3286.48	118.52	0.8838	0.9206	3288.65	118.60	0.8837	0.9205
130	4006.55	144.49	0.8583	0.9029	4012.42	144.70	0.8581	0.9027
136	4502.61	162.38	0.8408	0.8906	4513.17	162.76	0.8404	0.8903
138	4680.47	168.79	0.8345	0.8862	4693.30	169.25	0.8341	0.8859
140	4865.22	175.45	0.8280	0.8816	4880.80	176.01	0.8274	0.8812
150	5909.67	213.12	0.7911	0.8554	5950.77	214.60	0.7896	0.8544
160	7219.04	260.34	0.7448	0.8222	7329.43	264.32	0.7409	0.8194

	Iteration 6				Iteration 7			
% Flow	h_b	DP_b	r_b	Y_b6	h_b	DP_b	r_b	Y_b7
10	19.37	0.70	0.9993	0.9995	19.37	0.70	0.9993	0.9995
20	77.70	2.80	0.9973	0.9981	77.70	2.80	0.9973	0.9981
30	175.66	6.33	0.9938	0.9958	175.66	6.33	0.9938	0.9958
40	314.37	11.34	0.9889	0.9925	314.37	11.34	0.9889	0.9925
50	495.53	17.87	0.9825	0.9881	495.53	17.87	0.9825	0.9881
60	721.44	26.02	0.9745	0.9827	721.44	26.02	0.9745	0.9827
70	995.24	35.89	0.9648	0.9762	995.24	35.89	0.9648	0.9762
80	1321.04	47.64	0.9533	0.9683	1321.04	47.64	0.9533	0.9683
90	1704.35	61.46	0.9397	0.9591	1704.35	61.46	0.9397	0.9591
100	2152.58	77.63	0.9239	0.9482	2152.58	77.63	0.9239	0.9482
110	2675.94	96.50	0.9054	0.9355	2675.95	96.50	0.9054	0.9355
119.2464	3239.27	116.82	0.8855	0.9217	3239.32	116.82	0.8855	0.9217
120	3289.03	118.61	0.8837	0.9205	3289.09	118.61	0.8837	0.9205
130	4013.71	144.74	0.8581	0.9027	4013.99	144.75	0.8581	0.9027
136	4515.83	162.85	0.8403	0.8903	4516.49	162.88	0.8403	0.8903
138	4696.68	169.37	0.8339	0.8858	4697.57	169.41	0.8339	0.8858
140	4885.09	176.17	0.8273	0.8811	4886.28	176.21	0.8272	0.8811
150	5965.20	215.12	0.7891	0.8540	5970.29	215.30	0.7889	0.8539
160	7380.14	266.15	0.7391	0.8181	7403.63	266.99	0.7382	0.8175

	Iteration 8				Iteration 9			
% Flow	h_b	DP_b	r_b	Y_b8	h_b	DP_b	r_b	Y_b9
10	19.37	0.70	0.9993	0.9995	19.37	0.70	0.9993	0.9995
20	77.70	2.80	0.9973	0.9981	77.70	2.80	0.9973	0.9981
30	175.66	6.33	0.9938	0.9958	175.66	6.33	0.9938	0.9958
40	314.37	11.34	0.9889	0.9925	314.37	11.34	0.9889	0.9925
50	495.53	17.87	0.9825	0.9881	495.53	17.87	0.9825	0.9881
60	721.44	26.02	0.9745	0.9827	721.44	26.02	0.9745	0.9827
70	995.24	35.89	0.9648	0.9762	995.24	35.89	0.9648	0.9762
80	1321.04	47.64	0.9533	0.9683	1321.04	47.64	0.9533	0.9683
90	1704.35	61.46	0.9397	0.9591	1704.35	61.46	0.9397	0.9591
100	2152.58	77.63	0.9239	0.9482	2152.58	77.63	0.9239	0.9482
110	2675.96	96.50	0.9054	0.9355	2675.96	96.50	0.9054	0.9355
119.2464	3239.34	116.82	0.8855	0.9217	3239.34	116.82	0.8855	0.9217
120	3289.10	118.61	0.8837	0.9205	3289.11	118.61	0.8837	0.9205
130	4014.06	144.76	0.8581	0.9027	4014.07	144.76	0.8581	0.9027
136	4516.66	162.88	0.8403	0.8903	4516.71	162.88	0.8403	0.8903
138	4697.80	169.41	0.8339	0.8858	4697.86	169.42	0.8339	0.8858
140	4886.61	176.22	0.8272	0.8811	4886.70	176.23	0.8272	0.8811
150	5972.08	215.37	0.7889	0.8539	5972.71	215.39	0.7888	0.8539
160	7414.57	267.39	0.7379	0.8172	7419.66	267.57	0.7377	0.8170

	Iteration 10				Iteration 11			
% Flow	h_b	DP_b	r_b	Y_b10	h_b	DP_b	r_b	Y_b11
10	19.37	0.70	0.9993	0.9995	19.37	0.70	0.9993	0.9995
20	77.70	2.80	0.9973	0.9981	77.70	2.80	0.9973	0.9981
30	175.66	6.33	0.9938	0.9958	175.66	6.33	0.9938	0.9958
40	314.37	11.34	0.9889	0.9925	314.37	11.34	0.9889	0.9925
50	495.53	17.87	0.9825	0.9881	495.53	17.87	0.9825	0.9881
60	721.44	26.02	0.9745	0.9827	721.44	26.02	0.9745	0.9827
70	995.24	35.89	0.9648	0.9762	995.24	35.89	0.9648	0.9762
80	1321.04	47.64	0.9533	0.9683	1321.04	47.64	0.9533	0.9683
90	1704.35	61.46	0.9397	0.9591	1704.35	61.46	0.9397	0.9591
100	2152.58	77.63	0.9239	0.9482	2152.58	77.63	0.9239	0.9482
110	2675.96	96.50	0.9054	0.9355	2675.96	96.50	0.9054	0.9355
119.2464	3239.34	116.82	0.8855	0.9217	3239.34	116.82	0.8855	0.9217
120	3289.11	118.61	0.8837	0.9205	3289.11	118.61	0.8837	0.9205
130	4014.07	144.76	0.8581	0.9027	4014.07	144.76	0.8581	0.9027
136	4516.72	162.88	0.8403	0.8903	4516.72	162.88	0.8403	0.8903
138	4697.88	169.42	0.8339	0.8858	4697.88	169.42	0.8339	0.8858
140	4886.72	176.23	0.8272	0.8811	4886.73	176.23	0.8272	0.8811
150	5972.93	215.40	0.7888	0.8538	5973.01	215.40	0.7888	0.8538
160	7422.04	267.66	0.7376	0.8170	7423.15	267.70	0.7376	0.8170

	Iteration 12				Iteration 13			
% Flow	h_b	DP_b	r_b	Y_b12	h_b	DP_b	r_b	Y_b13
10	19.37	0.70	0.9993	0.9995	19.37	0.70	0.9993	0.9995
20	77.70	2.80	0.9973	0.9981	77.70	2.80	0.9973	0.9981
30	175.66	6.33	0.9938	0.9958	175.66	6.33	0.9938	0.9958
40	314.37	11.34	0.9889	0.9925	314.37	11.34	0.9889	0.9925
50	495.53	17.87	0.9825	0.9881	495.53	17.87	0.9825	0.9881
60	721.44	26.02	0.9745	0.9827	721.44	26.02	0.9745	0.9827
70	995.24	35.89	0.9648	0.9762	995.24	35.89	0.9648	0.9762
80	1321.04	47.64	0.9533	0.9683	1321.04	47.64	0.9533	0.9683
90	1704.35	61.46	0.9397	0.9591	1704.35	61.46	0.9397	0.9591
100	2152.58	77.63	0.9239	0.9482	2152.58	77.63	0.9239	0.9482
110	2675.96	96.50	0.9054	0.9355	2675.96	96.50	0.9054	0.9355
119.2464	3239.34	116.82	0.8855	0.9217	3239.34	116.82	0.8855	0.9217
120	3289.11	118.61	0.8837	0.9205	3289.11	118.61	0.8837	0.9205
130	4014.07	144.76	0.8581	0.9027	4014.07	144.76	0.8581	0.9027
136	4516.72	162.88	0.8403	0.8903	4516.72	162.88	0.8403	0.8903
138	4697.88	169.42	0.8339	0.8858	4697.88	169.42	0.8339	0.8858
140	4886.73	176.23	0.8272	0.8811	4886.73	176.23	0.8272	0.8811
150	5973.04	215.40	0.7888	0.8538	5973.05	215.40	0.7888	0.8538
160	7423.66	267.72	0.7375	0.8169	7423.91	267.72	0.7375	0.8169

	Iteration 14				Iteration 15			
% Flow	h_b	DP_b	r_b	Y_b12	h_b	DP_b	r_b	Y_b13
10	19.37	0.70	0.9993	0.9995	19.37	0.70	0.9993	0.9995
20	77.70	2.80	0.9973	0.9981	77.70	2.80	0.9973	0.9981
30	175.66	6.33	0.9938	0.9958	175.66	6.33	0.9938	0.9958
40	314.37	11.34	0.9889	0.9925	314.37	11.34	0.9889	0.9925
50	495.53	17.87	0.9825	0.9881	495.53	17.87	0.9825	0.9881
60	721.44	26.02	0.9745	0.9827	721.44	26.02	0.9745	0.9827
70	995.24	35.89	0.9648	0.9762	995.24	35.89	0.9648	0.9762
80	1321.04	47.64	0.9533	0.9683	1321.04	47.64	0.9533	0.9683
90	1704.35	61.46	0.9397	0.9591	1704.35	61.46	0.9397	0.9591
100	2152.58	77.63	0.9239	0.9482	2152.58	77.63	0.9239	0.9482
110	2675.96	96.50	0.9054	0.9355	2675.96	96.50	0.9054	0.9355
119.2464	3239.34	116.82	0.8855	0.9217	3239.34	116.82	0.8855	0.9217
120	3289.11	118.61	0.8837	0.9205	3289.11	118.61	0.8837	0.9205
130	4014.07	144.76	0.8581	0.9027	4014.07	144.76	0.8581	0.9027
136	4516.72	162.88	0.8403	0.8903	4516.72	162.88	0.8403	0.8903
138	4697.88	169.42	0.8339	0.8858	4697.88	169.42	0.8339	0.8858
140	4886.73	176.23	0.8272	0.8811	4886.73	176.23	0.8272	0.8811
150	5973.05	215.40	0.7888	0.8538	5973.06	215.40	0.7888	0.8538
160	7424.02	267.73	0.7375	0.8169	7424.07	267.73	0.7375	0.8169

	Average		May		Mar_20		Mar_3	
% Flow	psia	% Power	psia	% Power	psia	% Power	psia	% Power
10	933	16	939	15	933	22	927	10
20	937	24	944	25	938	25	930	23
30	943	35	950	34	943	38	935	33
40	949	44	956	45	949	46	941	42
50	962	55	964	56	959	56	965	53
60	970	64	972	65	966	65	973	63
70	980	74	983	75	975	74	983	73
80	993	82	991	83	995	83	991	79
90	999	90	987	90	1006	91	1002	88
100	1015	98	1016	98	1016	99	1013	97

START	3/6/03 11:00	Average				Average	
STOP	3/27/03 13:00	Flow	% Flow	psia	% Pwr	psia	% Pwr
INTERVAL	5m						
	3/6/03 11:40 AM	3.497492	100	1013	98	1013	97
	3/6/03 11:45 AM	3.497492	100	1013	98		
	3/6/03 11:50 AM	3.497492	100	1013	97		
	3/7/03 10:40 AM	3.198814	91	1004	88	1002	88
	3/7/03 10:45 AM	3.191219	91	1003	89		
	3/7/03 10:50 AM	3.160231	90	1002	88		
	3/7/03 10:55 AM	3.12938	89	1001	88		
	3/7/03 11:25 AM	2.814148	80	991	79	991	79
	3/7/03 11:30 AM	2.814148	80	992	80		
	3/7/03 11:35 AM	2.814148	80	991	79		
	3/7/03 11:40 AM	2.814148	80	991	79		
	3/7/03 12:35 PM	2.511725	72	984	74	983	73
	3/7/03 12:40 PM	2.504154	72	983	73		
	3/7/03 12:45 PM	2.488542	71	982	73		
	3/7/03 12:50 PM	2.408391	69	981	72		
	3/7/03 1:40 PM	2.140557	61	974	64	973	63
	3/7/03 1:45 PM	2.110335	60	974	64		
	3/7/03 1:50 PM	2.068711	59	972	62		
	3/7/03 2:25 PM	1.840302	53	967	55	965	53
	3/7/03 2:30 PM	1.764359	50	965	53		
	3/7/03 2:35 PM	1.764359	50	965	52		
	3/7/03 2:40 PM	1.684599	48	964	51		
	3/7/03 3:50 PM	1.462214	42	942	42	941	42
	3/7/03 3:55 PM	1.401237	40	942	42		
	3/7/03 4:00 PM	1.377455	39	941	41		
	3/7/03 4:05 PM	1.331413	38	940	41		
	3/7/03 5:40 PM	1.076675	31	936	34	935	33
	3/7/03 5:45 PM	1.032937	30	935	34		
	3/7/03 5:50 PM	1.031728	29	935	33		
	3/7/03 5:55 PM	1.031728	29	935	33		
	3/7/03 8:10 PM	0.721665	21	930	24	930	23
	3/7/03 8:15 PM	0.685254	20	930	23		
	3/7/03 8:20 PM	0.676178	19	930	22		
	3/7/03 9:45 PM	0.439092	13	927	17	927	10
	3/7/03 9:50 PM	0.415569	12	927	11		
	3/7/03 9:55 PM	0.272647	8	926	2		

START 3/20/03 23:00
STOP 3/27/03 13:00
INTERVAL 15m

	Average Flow	% Flow	psia	% Pwr	Average psia	Average % Pwr
3/21/03 12:30 PM	0.404184	11	933	22	933	22
3/21/03 12:45 PM	0.410289	11	933	22		
3/21/03 10:00 PM	0.679744	19	937	24	938	25
3/21/03 10:15 PM	0.694356	19	937	24		
3/21/03 10:30 PM	0.739246	20	938	24		
3/21/03 10:45 PM	0.739246	20	938	25		
3/21/03 11:00 PM	0.780654	22	939	27		
3/21/03 11:45 PM	0.943822	26	941	34	943	38
3/22/03 12:00 AM	1.150719	32	944	39		
3/22/03 12:15 AM	1.204354	33	946	41		
3/22/03 4:15 AM	1.337415	37	947	44	949	46
3/22/03 4:30 AM	1.447942	40	949	46		
3/22/03 4:45 AM	1.528006	42	951	49		
3/22/03 5:15 AM	1.809509	50	958	56	959	56
3/22/03 5:30 AM	1.85486	51	959	55		
3/22/03 9:15 AM	2.158982	60	965	65	966	65
3/22/03 9:30 AM	2.158982	60	966	65		
3/22/03 9:45 AM	2.159945	60	966	66		
3/22/03 10:00 AM	2.172731	60	966	65		
3/22/03 11:30 PM	2.438802	68	971	70	975	74
3/22/03 11:45 PM	2.574423	71	976	77		
3/23/03 12:00 AM	2.587912	72	976	76		
3/25/03 3:45 AM	2.887301	80	995	83	995	83
3/25/03 4:00 AM	2.887301	80	995	82		
3/25/03 4:15 AM	2.887301	80	995	84		
3/25/03 4:30 AM	2.898889	80	995	83		
3/25/03 1:00 PM	3.2304	89	1005	90	1006	91
3/25/03 1:15 PM	3.257054	90	1006	90		
3/25/03 1:30 PM	3.257054	90	1006	91		
3/25/03 1:45 PM	3.257054	90	1006	91		
3/25/03 2:00 PM	3.257054	90	1007	90		
3/26/03 7:45 AM	3.607513	100	1016	99	1016	99
3/26/03 8:00 AM	3.607513	100	1016	100		
3/26/03 8:15 AM	3.607513	100	1016	99		
3/26/03 8:30 AM	3.599464	100	1016	100		
3/26/03 8:45 AM	3.599115	100	1016	100		

START 5/14/03 16:00
STOP 5/20/03 13:00
INTERVAL 20m

	Average Flow	% Flow	psia	% Pwr	Average psia	Average % Pwr
5/14/03 4:20 PM	0	10	939	15	939	15
5/14/03 4:40 PM	0	10	940	15		
5/14/03 5:00 PM	0	10	939	16		
5/15/03 10:00 PM	1	18	943	23	944	25
5/15/03 10:20 PM	1	19	944	24		
5/15/03 10:40 PM	1	23	946	28		
5/15/03 11:00 PM	1	30	950	34	950	34
5/15/03 11:20 PM	1	31	950	34		
5/15/03 11:40 PM	1	31	950	35		
5/16/03 12:00 AM	1	31	950	35		
5/16/03 1:00 PM	1	40	956	45	956	45
5/16/03 1:20 PM	1	40	956	45		
5/16/03 1:40 PM	1	40	957	45		
5/16/03 2:00 PM	1	40	957	45		
5/16/03 5:00 PM	2	45	960	52	964	56
5/16/03 5:20 PM	2	48	962	54		
5/16/03 5:40 PM	2	55	968	61		
5/16/03 6:20 PM	2	59	971	63	972	65
5/16/03 6:40 PM	2	59	972	64		
5/16/03 7:00 PM	2	59	972	65		
5/16/03 7:20 PM	2	63	975	67		
5/17/03 8:20 PM	2	65	976	70	983	75
5/17/03 8:40 PM	3	74	986	78		
5/17/03 9:00 PM	3	75	986	78		
5/17/03 9:40 PM	3	77	988	80	991	83
5/17/03 10:00 PM	3	81	992	85		
5/17/03 10:20 PM	3	82	993	84		
5/18/03 9:20 PM	3	87	984	88	987	90
5/18/03 9:40 PM	3	90	987	90		
5/18/03 10:00 PM	3	93	991	93		
5/19/03 9:20 AM	4	100	1015	98	1016	98
5/19/03 9:40 AM	4	100	1016	98		
5/19/03 10:00 AM	4	100	1016	98		
5/19/03 10:20 AM	4	100	1016	98		

197A 5½-Digit Multimeter Specifications

DC VOLTS

RANGE	RESOLUTION	INPUT RESISTANCE	ACCURACY** ±(%rdg + counts) 24 Hr.* 22°-24°C	1 Year, 18°-28°C
200mV	1 µV	>1 GΩ	0.007 + 2	0.015 + 3
2 V	10 µV	>1 GΩ	0.005 + 2	0.01 + 2
20 V	100 µV	11 MΩ	0.005 + 2	0.015 + 3
200 V	1 mV	10 MΩ	0.005 + 2	0.015 + 2
1000 V	10 mV	10 MΩ	0.007 + 2	0.015 + 2

*Relative to calibration accuracy. **When properly zeroed.

NMRR: >60dB at 50 Hz, 60 Hz ±0.1%.

MAXIMUM ALLOWABLE INPUT: 1000V DC or peak AC (<10 seconds per minute on 200mV and 2V ranges: 300V rms continuous).

SETTLING TIME: 1 second to within 3 counts of final reading on range.

dB MODE (ref: 600Ω): Accuracy: ±(0.02dB+1 count) above -78dBm.

RESOLUTION: 0.01 dB above 0.7% of range.

dB REFERENCE IMPEDANCE: 50, 75, 93, 135, 300, or 600 ohms (default), front panel selectable.

DC AMPS

RANGE	RESOLUTION	MAXIMUM VOLTAGE BURDEN	ACCURACY (1 Year) 18°-28°C ±(%rdg + counts)
200 µA	1 nA	0.3V	0.1 + 15
2mA	10 nA	0.3V	0.1 + 15
20mA	100 nA	0.3V	0.1 + 15
200mA	1 µA	0.3V	0.2 + 15
2000mA	10 µA	0.8V	0.2 + 15
10 A	100 µA	0.3V	0.5 + 15

*Above 5A derate 0.15% rdg per amp for self-heating.

OVERLOAD PROTECTION: mA Input: 2A fuse (250V), externally accessible. 10A Input: 20A for 15s, unused.

SETTLING TIME: 1 second to within 3 counts of final reading.

ANALOG/IEEE OUTPUT (Model 1072A Option)

ANALOG OUTPUT:

Accuracy: ±(0.25% of displayed reading + 2mV).
Response Time: Follows display conversion rate.
Level: 1V=100,000 counts on ×1 gain. 1V=100 counts on ×1000 gain.
Maximum output voltage ~4V.
Output Resistance: 100Ω
Isolation: 500V peak, Input LO to Output LO.
50V peak, Output LO to earth ground.

IEEE OUTPUT: See IEEE BUS IMPLEMENTATION.

IEEE BUS IMPLEMENTATION
(1072A ANALOG/IEEE & 1073A IEEE OPTIONS)

MULTILINE COMMANDS: DCL, SDC, GET, GTL, UNT, UNL, SPE, SPD.

UNILINE COMMANDS: IFC, REN, IDY, SRQ, ATN.

INTERFACE FUNCTIONS: SH1, AH1, T5, TE0, L4, LE0, SR1, RL0, PP0, DC1, DT1, C0, E1.

PROGRAMMABLE PARAMETERS: Range, REL, dB, EOI, Trigger, Calibration, SRQ, Status, Output Format, Termination, Data Logger, Reading.

TRMS AC VOLTS

RANGE	20Hz-50Hz	50Hz-10kHz	ACCURACY (1 Year)* 18°-28°C ±(%rdg + counts) 10kHz-20kHz	20kHz-50kHz	50kHz-100kHz
200 mV	1.00 + 100	0.35 + 100	0.6 + 200	1.5 + 250	5 + 400
2V-200V	1.00 + 100	0.35 + 100	0.6 + 200	1.5 + 250	5 + 400
750 V	1.25 + 100	0.5 + 100	1.0 + 200	1.8 + 250	5 + 400

*Above 1800 counts. **Above 18000 counts.

MAXIMUM ALLOWABLE INPUT: 750V rms, 1000V peak (<10 seconds per minute on 200mV and 2V ranges: 300V rms continuous). 10⁷V-Hz maximum.

3dB BANDWIDTH: 300kHz typical.

INPUT IMPEDANCE: 1MΩ paralleled by <75pF on 200mV and 750V ranges; 1.1MΩ on 200mV, 2V, and 20V ranges. Capacitively coupled.

SETTLING TIME: 1 second to within 0.1% of final reading on ranges.

dB MODE (ref.: 600Ω)

RANGE	INPUT	ACCURACY (±dBm) 20Hz-10kHz	10kHz-20kHz	20kHz-50kHz	50kHz-100kHz
2V-750V	200 mV to 750 V (-12 to 59.8dBm)	0.18	0.18	0.28	0.50
200 mV	20 mV to 200 mV (-32 to -12dBm)	0.18	0.18	0.28	0.85
	2 mV to 20 mV (-52 to -32dBm)	0.85	1.10	2.00	—
	1 mV to 2 mV (-58 to -52dBm)	2.00	3.00	—	—

RESOLUTION: 0.01dBm above 0.5% of range.

dB REFERENCE IMPEDANCE: 50, 75, 93, 135, 300, or 600 ohms (default). front panel selectable.

TRMS AC AMPS

RANGE	MAX VOLTAGE BURDEN	ACCURACY (1 Year)* 18°-28°C ±(%rdg+counts) 20Hz-50Hz	50Hz-10kHz	10kHz-20kHz
200µA-20mA	0.3V	1.0 + 100	0.8 + 100	2 + 250
200 mA	0.3V	1.0 + 100	0.8 + 100	—
2000 mA	0.8V	1.0 + 100	0.8 + 100	—
10 A	0.3V	1.5 + 100	1.0 + 100**	—

*Above 1800 counts.

**1kHz max. Above 5A derate 0.15% rdg/amp for self-heating.

SETTLING TIME: 1 second to within 0.1% of final reading.

OHMS

RANGE	RESOLUTION	OUTPUT NOMINAL I-SHORT	MAX.V ACROSS UNKNOWN	ACCURACY ±(%rdg+counts) 24 Hr., 22°-24°C	1 Year, 18°-28°C
200 Ω	1 mΩ	2mA	0.5 V	0.01 + 2*	0.018 + 3*
2 kΩ*	10 mΩ	2mA	1.0V	0.01 + 2	0.018 + 2
20 kΩ	100 mΩ	400µA	4.0V	0.014 + 2	0.020 + 2
200 kΩ*	1 Ω	40µA	1.0V	0.014 + 2	0.020 + 2
2 MΩ**	10 Ω	4µA	4.0V	0.02 + 2	0.05 + 2
20 MΩ**	100 Ω	400nA	4.0V	0.10 + 2	0.12 + 2
200 MΩ**	10 kΩ	400nA	5.0V	2.00 + 1	2.00 + 1

*When properly zeroed. **Appropriate range selected automatically in MΩ.

CONFIGURATION: Automatic 2- or 4-terminal.

MAXIMUM ALLOWABLE INPUT: 450V DC or peak AC 10 seconds per minute, 350V rms continuous.

OPEN CIRCUIT VOLTAGE: <5V.

DIODE TEST: Display reads junction voltage up to 2.2V. Test Current: 1.6mA nominal.

SETTLING TIME: 2 seconds to within 3 counts of final reading on range.

GENERAL

DISPLAY: Backlit 1220,000-count LCD, 0.45 in height; polarity, function, range, and status indication.

RANGING: Auto or manual on DC volts, AC volts, and ohms; manual on AC amps and DC amps.

AUTO RANGING TIME: 200ms per range average.

RELATIVE: Push button allows zeroing of any range readings. Allows readings to be made with respect to baseline value. Front panel annunciator indicates REL mode.

DATA LOGGER and MIN/MAX: 100 reading storage capacity, records data at one of six selectable rates from 3 readings/second to 1 reading/hour or by manual triggering. Also detects and stores maximum and minimum readings continuously while in data logger mode.

CONVERSION RATE: 3 readings/second.

OVERRANGE INDICATION: "OL" displayed.

CREST FACTOR (ratio of peak value to rms value), AC FUNCTIONS: 3.

MAXIMUM COMMON MODE VOLTAGE: 500V peak.

COMMON MODE REJECTION RATIO (1kΩ unbalance): >120dB at DC, 50Hz, 60Hz (0.1%, >60dB in AC volts.

TEMPERATURE COEFFICIENT (0°-18°C & 28°-50°C): ±(0.1 × applicable one year accuracy specification)/°C.

ENVIRONMENT: Operating: 0°-50°C; <80% relative humidity up to 35°C; linearly derate 3% RH/°C, 35°-50°C. Storage: -40° to +70°C.

WARM-UP: 1 hour to rated accuracy.

POWER: 105-125V or 210-250V (external switch selected), 90-110V available; 50-60Hz, 12VA. Rechargeable power cord. Optional 3 hour battery pack, Model 1978.

DIMENSIONS, WEIGHT: 89mm high × 235mm wide × 275mm deep (3½ in × 9¼ in × 10¾ in). Net weight 1.8kg (3 lb. 14 oz).

ACCESSORIES SUPPLIED: Model 1751 Safety Test Leads, instruction manual.

Specifications are subject to change without notice.

Rev. B 3/9/01

3840 MWt EPU

PRIMARY ELEMENT ACCURACY

% Flow	PPH	DP	Ya	h	PPH Error	% Flow Error (#1)	h+	h-	DP+	DP-	DP Error (psia) DP+ Error	DP Error (psia) DP- Error	DP Error (% Span) #2 DP+ Error	DP Error (% Span) #2 DP- Error
20	838600	2.80	0.9981	77.70	16772	0.34	80.84	74.63	2.92	2.69	0.11	-0.11	0.04	-0.04
30	1257900	6.33	0.9958	175.66	25158	0.50	182.75	168.70	6.59	6.08	0.26	-0.25	0.10	-0.09
40	1677200	11.34	0.9925	314.37	33544	0.67	327.07	301.92	11.80	10.89	0.46	-0.45	0.17	-0.17
50	2096500	17.87	0.9881	495.53	41930	0.84	515.54	475.90	18.59	17.16	0.72	-0.71	0.27	-0.26
60	2515800	26.02	0.9827	721.44	50316	1.01	750.59	692.87	27.07	24.99	1.05	-1.03	0.39	-0.38
70	2935100	35.89	0.9762	995.24	58702	1.17	1035.45	955.83	37.34	34.47	1.45	-1.42	0.54	-0.53
80	3354400	47.64	0.9683	1321.04	67088	1.34	1374.41	1268.73	49.56	45.75	1.92	-1.89	0.72	-0.70
90	3773700	61.46	0.9591	1704.35	75474	1.51	1773.21	1636.86	63.95	59.03	2.48	-2.43	0.93	-0.91
100	4193000	77.63	0.9482	2152.58	83860	1.68	2239.55	2067.34	80.76	74.55	3.14	-3.07	1.17	-1.15
110	4612300	96.50	0.9355	2675.96	92246	1.84	2784.07	2569.99	100.40	92.68	3.90	-3.82	1.46	-1.43
119.2428	5000000	116.82	0.9217	3239.34	100000	2.00	3370.21	3111.06	121.54	112.19	4.72	-4.63	1.76	-1.73
120	5031600	118.61	0.9205	3289.11	100632		3421.99	3158.86	123.41	113.92	4.79	-4.70	1.79	-1.75
130	5450900	144.76	0.9027	4014.07	109018		4176.24	3855.12	150.61	139.03	5.85	-5.73	2.18	-2.14
136	5702480	162.88	0.8903	4516.72	114050		4699.19	4337.86	169.46	156.43	6.58	-6.45	2.46	-2.41
138	5786340	169.42	0.8858	4697.88	115727		4887.68	4511.85	176.26	162.71	6.84	-6.71	2.56	-2.51
140	5870200	176.23	0.8811	4886.73	117404		5084.16	4693.22	183.35	169.25	7.12	-6.98	2.66	-2.61

Where:

C =	0.995
D =	23.647
d =	12.911
Fa =	1.009
γ =	2.293
B =	0.545989
% Flow =	(PPH / 4193000) * 100%
PPH =	359*(C/(1-B^4)^0.5*Ya*d^2*Fa*(h*Den)^0.5)
DP =	(h*62.316)/1728
Ya =	From Attachment 10.3
h =	DP*(1728/62.316)
Flow Error =	2% * Flow Rate
h+ =	((MPPH+Error)/(359*(C/((1-B^4)^0.5))*Ya*d^2*Fa))^2/Den
h- =	((MPPH-Error)/(359*(C/((1-B^4)^0.5))*Ya*d^2*Fa))^2/Den
DP+ =	(h+ * 62.316)/1728
DP- =	(h- * 62.316)/1728

Notes:

1) Error is expressed in % flow for propragation of indication error
Span is 5,000,000 lb/hr

2) Error is expressed in % DP span for propragation of setpoint error
Span is 267.73 psid

3840 MWt EPU

PROCESS MEASUREMENT ACCURACY

% Flow	psia	PPH	DP	Ya	h	Specific Volume	h Error	h+	PPH+	PPH Error	Error % Flow
10	927	419300	0.70	0.9995	19.37	0.484957	2.17	21.54	442112	22812	0.46
20	937	838600	2.80	0.9981442	77.70	0.479271	7.67	85.38	879025	40425	0.81
30	943	1257900	6.33	0.9958	175.66	0.475915	15.99	191.65	1313913	56013	1.12
40	949	1677200	11.34	0.9925	314.37	0.472599	26.23	340.60	1745771	68571	1.37
50	962	2096500	17.87	0.9881	495.53	0.465551	33.34	528.87	2165880	69380	1.39
60	970	2515800	26.02	0.9827	721.44	0.461304	41.52	762.96	2587174	71374	1.43
70	980	2935100	35.89	0.9762	995.24	0.456088	45.37	1040.61	3001257	66157	1.32
80	993	3354400	47.64	0.9683	1321.04	0.449457	40.14	1361.18	3404982	50582	1.01
90	999	3773700	61.46	0.9591	1704.35	0.446453	40.05	1744.40	3817782	44082	0.88
100	1015	4193000	77.63	0.94821	2152.58	0.438606	11.86	2164.44	4204536	11536	0.23
110	1015	4612300	96.50	0.9355	2675.96	0.438606	14.74	2690.70	4624990	12690	0.25
119.2464	1015	5000000	116.82	0.9217	3239.34	0.438606	17.85	3257.19	5013756	13756	0.28

Where:

C =	0.995
D =	23.647
d =	12.911
Fa =	1.009
γ =	2.293
B =	0.5460
% Flow =	(PPH / 4193000) * 100%
PPH =	((% Flow/100)*4193000)
DP =	(h*62.316)/1728
Ya =	from Attachment 10.3
h =	(W/(359*(C/((1-B^4)^0.5))*Ya*d^2*Fa))^2/ρ
PPH+ =	359*(C/(1-B^4)^0.5))*Ya*d^2*Fa*(h+*ρ)^0.5)
span =	5000000 lbm/hr

START 5/20/03 2:00
STOP 5/20/03 13:00
INTERVAL 30s

	% Power hc.a2175	NR hc.a2578		% Power hc.a2175	NR hc.a2578
20-May-03 02:00:00	98.43	1001.43	20-May-03 02:29:00	99.05	1001.62
20-May-03 02:00:30	98.90	1001.45	20-May-03 02:29:30	99.12	1001.62
20-May-03 02:01:00	98.97	1001.46	20-May-03 02:30:00	99.08	1001.61
20-May-03 02:01:30	99.03	1001.48	20-May-03 02:30:30	99.04	1001.61
20-May-03 02:02:00	97.84	1001.50	20-May-03 02:31:00	99.00	1001.60
20-May-03 02:02:30	97.47	1001.51	20-May-03 02:31:30	98.96	1001.58
20-May-03 02:03:00	97.91	1001.53	20-May-03 02:32:00	98.92	1001.48
20-May-03 02:03:30	96.77	1001.55	20-May-03 02:32:30	98.88	1001.38
20-May-03 02:04:00	97.17	1001.57	20-May-03 02:33:00	98.84	1001.29
20-May-03 02:04:30	97.58	1001.58	20-May-03 02:33:30	98.80	1001.29
20-May-03 02:05:00	97.98	1001.60	20-May-03 02:34:00	98.76	1001.29
20-May-03 02:05:30	98.28	1001.59	20-May-03 02:34:30	98.72	1001.30
20-May-03 02:06:00	98.16	1001.57	20-May-03 02:35:00	98.68	1001.30
20-May-03 02:06:30	98.04	1001.56	20-May-03 02:35:30	98.64	1001.30
20-May-03 02:07:00	97.91	1001.54	20-May-03 02:36:00	98.59	1001.31
20-May-03 02:07:30	97.79	1001.52	20-May-03 02:36:30	98.55	1001.31
20-May-03 02:08:00	97.66	1001.51	20-May-03 02:37:00	98.51	1001.32
20-May-03 02:08:30	97.54	1001.48	20-May-03 02:37:30	98.47	1001.32
20-May-03 02:09:00	97.59	1001.46	20-May-03 02:38:00	98.43	1001.33
20-May-03 02:09:30	97.76	1001.44	20-May-03 02:38:30	98.39	1001.33
20-May-03 02:10:00	97.92	1001.45	20-May-03 02:39:00	98.35	1001.34
20-May-03 02:10:30	98.08	1001.46	20-May-03 02:39:30	98.31	1001.34
20-May-03 02:11:00	98.25	1001.47	20-May-03 02:40:00	98.28	1001.34
20-May-03 02:11:30	98.41	1001.47	20-May-03 02:40:30	98.25	1001.32
20-May-03 02:12:00	98.58	1001.48	20-May-03 02:41:00	98.22	1001.30
20-May-03 02:12:30	98.74	1001.49	20-May-03 02:41:30	98.20	1001.28
20-May-03 02:13:00	98.75	1001.50	20-May-03 02:42:00	98.17	1001.26
20-May-03 02:13:30	98.72	1001.50	20-May-03 02:42:30	98.14	1001.24
20-May-03 02:14:00	98.69	1001.51	20-May-03 02:43:00	98.11	1001.22
20-May-03 02:14:30	98.66	1001.52	20-May-03 02:43:30	98.08	1001.19
20-May-03 02:15:00	98.63	1001.53	20-May-03 02:44:00	98.05	1001.17
20-May-03 02:15:30	98.60	1001.54	20-May-03 02:44:30	98.02	1001.15
20-May-03 02:16:00	98.57	1001.54	20-May-03 02:45:00	97.99	1001.12
20-May-03 02:16:30	98.54	1001.55	20-May-03 02:45:30	97.96	1001.10
20-May-03 02:17:00	98.51	1001.56	20-May-03 02:46:00	97.88	1001.29
20-May-03 02:17:30	98.48	1001.57	20-May-03 02:46:30	97.80	1001.34
20-May-03 02:18:00	98.45	1001.57	20-May-03 02:47:00	97.72	1001.37
20-May-03 02:18:30	98.41	1001.58	20-May-03 02:47:30	97.64	1001.40
20-May-03 02:19:00	98.38	1001.59	20-May-03 02:48:00	97.56	1001.43
20-May-03 02:19:30	98.35	1001.60	20-May-03 02:48:30	97.47	1001.45
20-May-03 02:20:00	98.32	1001.60	20-May-03 02:49:00	97.39	1001.48
20-May-03 02:20:30	98.29	1001.57	20-May-03 02:49:30	97.31	1001.51
20-May-03 02:21:00	98.28	1001.54	20-May-03 02:50:00	97.23	1001.54
20-May-03 02:21:30	98.31	1001.51	20-May-03 02:50:30	97.15	1001.56
20-May-03 02:22:00	98.33	1001.48	20-May-03 02:51:00	97.07	1001.56
20-May-03 02:22:30	98.35	1001.45	20-May-03 02:51:30	98.74	1001.54
20-May-03 02:23:00	98.38	1001.42	20-May-03 02:52:00	98.73	1001.53
20-May-03 02:23:30	98.40	1001.43	20-May-03 02:52:30	98.72	1001.51
20-May-03 02:24:00	98.42	1001.46	20-May-03 02:53:00	98.71	1001.50
20-May-03 02:24:30	98.44	1001.49	20-May-03 02:53:30	98.70	1001.48
20-May-03 02:25:00	98.47	1001.52	20-May-03 02:54:00	98.69	1001.47
20-May-03 02:25:30	98.49	1001.55	20-May-03 02:54:30	98.68	1001.45
20-May-03 02:26:00	98.55	1001.58	20-May-03 02:55:00	98.67	1001.44
20-May-03 02:26:30	98.64	1001.61	20-May-03 02:55:30	98.66	1001.42
20-May-03 02:27:00	98.72	1001.63	20-May-03 02:56:00	98.65	1001.41
20-May-03 02:27:30	98.80	1001.63	20-May-03 02:56:30	98.64	1001.39
20-May-03 02:28:00	98.88	1001.63	20-May-03 02:57:00	98.63	1001.38
20-May-03 02:28:30	98.97	1001.62	20-May-03 02:57:30	98.62	1001.36
	% Power hc.a2175	NR hc.a2578		% Power hc.a2175	NR hc.a2578
20-May-03 02:58:00	98.61	1001.35	20-May-03 03:27:00	97.83	1001.56

20-May-03 02:58:30	98.60	1001.36	20-May-03 03:27:30	97.59	1001.55
20-May-03 02:59:00	98.59	1001.37	20-May-03 03:28:00	97.36	1001.55
20-May-03 02:59:30	98.58	1001.38	20-May-03 03:28:30	97.12	1001.54
20-May-03 03:00:00	98.57	1001.39	20-May-03 03:29:00	99.23	1001.54
20-May-03 03:00:30	98.56	1001.40	20-May-03 03:29:30	98.97	1001.54
20-May-03 03:01:00	98.55	1001.41	20-May-03 03:30:00	98.72	1001.53
20-May-03 03:01:30	98.54	1001.43	20-May-03 03:30:30	98.47	1001.53
20-May-03 03:02:00	98.53	1001.44	20-May-03 03:31:00	98.21	1001.52
20-May-03 03:02:30	98.52	1001.45	20-May-03 03:31:30	97.96	1001.52
20-May-03 03:03:00	98.51	1001.46	20-May-03 03:32:00	97.96	1001.51
20-May-03 03:03:30	98.50	1001.47	20-May-03 03:32:30	97.98	1001.51
20-May-03 03:04:00	98.49	1001.49	20-May-03 03:33:00	98.01	1001.51
20-May-03 03:04:30	98.48	1001.50	20-May-03 03:33:30	98.03	1001.50
20-May-03 03:05:00	98.47	1001.50	20-May-03 03:34:00	98.05	1001.50
20-May-03 03:05:30	98.46	1001.49	20-May-03 03:34:30	98.08	1001.49
20-May-03 03:06:00	98.45	1001.49	20-May-03 03:35:00	98.10	1001.49
20-May-03 03:06:30	98.44	1001.49	20-May-03 03:35:30	98.13	1001.48
20-May-03 03:07:00	98.43	1001.48	20-May-03 03:36:00	98.15	1001.48
20-May-03 03:07:30	98.42	1001.48	20-May-03 03:36:30	98.18	1001.47
20-May-03 03:08:00	98.41	1001.47	20-May-03 03:37:00	98.20	1001.47
20-May-03 03:08:30	98.40	1001.46	20-May-03 03:37:30	98.20	1001.47
20-May-03 03:09:00	98.39	1001.45	20-May-03 03:38:00	98.14	1001.46
20-May-03 03:09:30	98.38	1001.41	20-May-03 03:38:30	98.09	1001.46
20-May-03 03:10:00	98.37	1001.34	20-May-03 03:39:00	98.03	1001.45
20-May-03 03:10:30	98.36	1001.27	20-May-03 03:39:30	97.97	1001.45
20-May-03 03:11:00	98.35	1001.20	20-May-03 03:40:00	97.91	1001.44
20-May-03 03:11:30	98.34	1001.13	20-May-03 03:40:30	97.85	1001.44
20-May-03 03:12:00	98.33	1001.06	20-May-03 03:41:00	97.79	1001.44
20-May-03 03:12:30	98.32	1001.00	20-May-03 03:41:30	97.73	1001.43
20-May-03 03:13:00	98.31	1001.15	20-May-03 03:42:00	97.68	1001.43
20-May-03 03:13:30	98.30	1001.35	20-May-03 03:42:30	97.62	1001.42
20-May-03 03:14:00	98.29	1001.36	20-May-03 03:43:00	97.56	1001.42
20-May-03 03:14:30	98.28	1001.37	20-May-03 03:43:30	97.50	1001.41
20-May-03 03:15:00	98.27	1001.38	20-May-03 03:44:00	97.44	1001.41
20-May-03 03:15:30	98.26	1001.39	20-May-03 03:44:30	97.38	1001.41
20-May-03 03:16:00	98.25	1001.40	20-May-03 03:45:00	97.33	1001.40
20-May-03 03:16:30	98.23	1001.41	20-May-03 03:45:30	97.27	1001.40
20-May-03 03:17:00	98.12	1001.41	20-May-03 03:46:00	97.21	1001.39
20-May-03 03:17:30	98.03	1001.42	20-May-03 03:46:30	97.15	1001.39
20-May-03 03:18:00	98.03	1001.43	20-May-03 03:47:00	97.09	1001.39
20-May-03 03:18:30	98.04	1001.44	20-May-03 03:47:30	97.03	1001.38
20-May-03 03:19:00	98.04	1001.45	20-May-03 03:48:00	96.98	1001.38
20-May-03 03:19:30	98.04	1001.46	20-May-03 03:48:30	97.72	1001.37
20-May-03 03:20:00	98.05	1001.47	20-May-03 03:49:00	98.68	1001.37
20-May-03 03:20:30	98.05	1001.48	20-May-03 03:49:30	99.23	1001.36
20-May-03 03:21:00	98.05	1001.49	20-May-03 03:50:00	98.42	1001.36
20-May-03 03:21:30	98.06	1001.50	20-May-03 03:50:30	99.26	1001.36
20-May-03 03:22:00	98.06	1001.51	20-May-03 03:51:00	97.23	1001.35
20-May-03 03:22:30	98.06	1001.52	20-May-03 03:51:30	98.02	1001.35
20-May-03 03:23:00	98.07	1001.53	20-May-03 03:52:00	98.29	1001.34
20-May-03 03:23:30	98.07	1001.53	20-May-03 03:52:30	98.20	1001.34
20-May-03 03:24:00	98.07	1001.54	20-May-03 03:53:00	98.10	1001.34
20-May-03 03:24:30	98.08	1001.55	20-May-03 03:53:30	98.01	1001.33
20-May-03 03:25:00	98.08	1001.56	20-May-03 03:54:00	97.92	1001.33
20-May-03 03:25:30	98.08	1001.57	20-May-03 03:54:30	97.83	1001.32
20-May-03 03:26:00	98.09	1001.57	20-May-03 03:55:00	97.74	1001.32
20-May-03 03:26:30	98.07	1001.56	20-May-03 03:55:30	97.65	1001.31
	% Power	NR		% Power	NR
	hc.a2175	hc.a2578		hc.a2175	hc.a2578
20-May-03 03:56:00	97.56	1001.31	20-May-03 04:25:00	99.01	1001.37
20-May-03 03:56:30	97.46	1001.31	20-May-03 04:25:30	98.94	1001.40
20-May-03 03:57:00	97.37	1001.31	20-May-03 04:26:00	98.87	1001.42
20-May-03 03:57:30	97.28	1001.31	20-May-03 04:26:30	98.79	1001.45
20-May-03 03:58:00	98.35	1001.31	20-May-03 04:27:00	98.72	1001.47

20-May-03 03:58:30	98.35	1001.32	20-May-03 04:27:30	98.65	1001.45
20-May-03 03:59:00	98.35	1001.32	20-May-03 04:28:00	98.57	1001.42
20-May-03 03:59:30	98.36	1001.33	20-May-03 04:28:30	98.50	1001.39
20-May-03 04:00:00	98.36	1001.33	20-May-03 04:29:00	98.43	1001.36
20-May-03 04:00:30	98.37	1001.34	20-May-03 04:29:30	98.36	1001.33
20-May-03 04:01:00	98.37	1001.34	20-May-03 04:30:00	98.28	1001.30
20-May-03 04:01:30	98.38	1001.35	20-May-03 04:30:30	98.85	1001.27
20-May-03 04:02:00	98.38	1001.35	20-May-03 04:31:00	97.33	1001.24
20-May-03 04:02:30	98.38	1001.36	20-May-03 04:31:30	98.31	1001.21
20-May-03 04:03:00	98.39	1001.36	20-May-03 04:32:00	99.07	1001.18
20-May-03 04:03:30	98.39	1001.37	20-May-03 04:32:30	98.93	1001.15
20-May-03 04:04:00	98.40	1001.37	20-May-03 04:33:00	98.79	1001.12
20-May-03 04:04:30	98.40	1001.38	20-May-03 04:33:30	98.65	1001.09
20-May-03 04:05:00	98.41	1001.41	20-May-03 04:34:00	98.51	1001.06
20-May-03 04:05:30	98.41	1001.45	20-May-03 04:34:30	98.37	1001.03
20-May-03 04:06:00	98.41	1001.47	20-May-03 04:35:00	98.23	1001.00
20-May-03 04:06:30	98.42	1001.47	20-May-03 04:35:30	98.08	1000.97
20-May-03 04:07:00	98.42	1001.47	20-May-03 04:36:00	97.94	1000.94
20-May-03 04:07:30	98.43	1001.47	20-May-03 04:36:30	97.80	1000.99
20-May-03 04:08:00	98.43	1001.47	20-May-03 04:37:00	97.66	1001.11
20-May-03 04:08:30	98.44	1001.47	20-May-03 04:37:30	97.52	1001.23
20-May-03 04:09:00	97.35	1001.47	20-May-03 04:38:00	97.57	1001.28
20-May-03 04:09:30	97.38	1001.47	20-May-03 04:38:30	97.89	1001.32
20-May-03 04:10:00	97.62	1001.47	20-May-03 04:39:00	98.21	1001.37
20-May-03 04:10:30	97.86	1001.47	20-May-03 04:39:30	98.42	1001.41
20-May-03 04:11:00	98.10	1001.47	20-May-03 04:40:00	98.47	1001.45
20-May-03 04:11:30	97.61	1001.47	20-May-03 04:40:30	98.52	1001.47
20-May-03 04:12:00	97.03	1001.47	20-May-03 04:41:00	98.56	1001.46
20-May-03 04:12:30	98.88	1001.47	20-May-03 04:41:30	98.61	1001.45
20-May-03 04:13:00	98.90	1001.47	20-May-03 04:42:00	98.65	1001.44
20-May-03 04:13:30	98.92	1001.48	20-May-03 04:42:30	98.70	1001.43
20-May-03 04:14:00	98.94	1001.48	20-May-03 04:43:00	98.75	1001.42
20-May-03 04:14:30	98.96	1001.49	20-May-03 04:43:30	98.79	1001.41
20-May-03 04:15:00	97.41	1001.49	20-May-03 04:44:00	98.84	1001.40
20-May-03 04:15:30	97.85	1001.49	20-May-03 04:44:30	98.89	1001.39
20-May-03 04:16:00	97.80	1001.50	20-May-03 04:45:00	98.07	1001.38
20-May-03 04:16:30	97.74	1001.50	20-May-03 04:45:30	98.08	1001.37
20-May-03 04:17:00	97.68	1001.51	20-May-03 04:46:00	98.09	1001.36
20-May-03 04:17:30	97.62	1001.51	20-May-03 04:46:30	98.11	1001.35
20-May-03 04:18:00	97.57	1001.52	20-May-03 04:47:00	98.12	1001.34
20-May-03 04:18:30	97.51	1001.52	20-May-03 04:47:30	98.14	1001.33
20-May-03 04:19:00	97.45	1001.52	20-May-03 04:48:00	98.15	1001.32
20-May-03 04:19:30	97.40	1001.53	20-May-03 04:48:30	98.16	1001.31
20-May-03 04:20:00	97.34	1001.53	20-May-03 04:49:00	98.18	1001.30
20-May-03 04:20:30	97.28	1001.54	20-May-03 04:49:30	98.19	1001.29
20-May-03 04:21:00	97.73	1001.53	20-May-03 04:50:00	98.19	1001.28
20-May-03 04:21:30	98.92	1001.51	20-May-03 04:50:30	98.19	1001.27
20-May-03 04:22:00	98.17	1001.44	20-May-03 04:51:00	98.20	1001.26
20-May-03 04:22:30	97.80	1001.25	20-May-03 04:51:30	98.20	1001.25
20-May-03 04:23:00	97.42	1001.28	20-May-03 04:52:00	98.20	1001.27
20-May-03 04:23:30	97.05	1001.30	20-May-03 04:52:30	98.21	1001.29
20-May-03 04:24:00	99.16	1001.32	20-May-03 04:53:00	98.21	1001.32
20-May-03 04:24:30	99.08	1001.35	20-May-03 04:53:30	98.21	1001.35
	% Power	NR		% Power	NR
	hc.a2175	hc.a2578		hc.a2175	hc.a2578
20-May-03 04:54:00	98.33	1001.34	20-May-03 05:23:00	99.90	1000.98
20-May-03 04:54:30	98.45	1001.33	20-May-03 05:23:30	99.99	1000.98
20-May-03 04:55:00	98.58	1001.33	20-May-03 05:24:00	100.07	1001.07
20-May-03 04:55:30	98.71	1001.32	20-May-03 05:24:30	100.16	1001.16
20-May-03 04:56:00	98.83	1001.32	20-May-03 05:25:00	100.44	1001.25
20-May-03 04:56:30	98.96	1001.31	20-May-03 05:25:30	100.76	1001.31
20-May-03 04:57:00	99.08	1001.31	20-May-03 05:26:00	101.08	1001.28
20-May-03 04:57:30	99.52	1001.30	20-May-03 05:26:30	100.78	1001.25
20-May-03 04:58:00	101.19	1001.30	20-May-03 05:27:00	99.66	1001.23

20-May-03 04:58:30	99.30	1001.29	20-May-03 05:27:30	99.71	1001.20
20-May-03 04:59:00	99.66	1001.28	20-May-03 05:28:00	99.76	1001.17
20-May-03 04:59:30	98.88	1001.28	20-May-03 05:28:30	99.82	1001.14
20-May-03 05:00:00	100.36	1001.27	20-May-03 05:29:00	99.87	1001.12
20-May-03 05:00:30	100.29	1001.27	20-May-03 05:29:30	99.93	1001.09
20-May-03 05:01:00	100.21	1001.26	20-May-03 05:30:00	99.98	1001.06
20-May-03 05:01:30	100.13	1001.26	20-May-03 05:30:30	100.04	1001.04
20-May-03 05:02:00	100.05	1001.25	20-May-03 05:31:00	100.09	1001.01
20-May-03 05:02:30	99.97	1001.15	20-May-03 05:31:30	100.15	1000.98
20-May-03 05:03:00	99.89	1001.07	20-May-03 05:32:00	100.20	1000.95
20-May-03 05:03:30	99.81	1001.17	20-May-03 05:32:30	100.25	1000.93
20-May-03 05:04:00	99.73	1001.27	20-May-03 05:33:00	100.27	1000.90
20-May-03 05:04:30	99.65	1001.37	20-May-03 05:33:30	99.96	1000.87
20-May-03 05:05:00	99.57	1001.47	20-May-03 05:34:00	99.65	1000.85
20-May-03 05:05:30	99.49	1001.57	20-May-03 05:34:30	99.34	1000.89
20-May-03 05:06:00	99.41	1001.67	20-May-03 05:35:00	99.03	1000.99
20-May-03 05:06:30	99.33	1001.77	20-May-03 05:35:30	100.25	1001.10
20-May-03 05:07:00	99.25	1001.54	20-May-03 05:36:00	101.12	1001.21
20-May-03 05:07:30	99.17	1001.31	20-May-03 05:36:30	100.67	1001.31
20-May-03 05:08:00	99.10	1001.31	20-May-03 05:37:00	100.23	1001.42
20-May-03 05:08:30	99.06	1001.30	20-May-03 05:37:30	99.84	1001.53
20-May-03 05:09:00	99.07	1001.30	20-May-03 05:38:00	99.87	1001.63
20-May-03 05:09:30	99.08	1001.29	20-May-03 05:38:30	99.89	1001.74
20-May-03 05:10:00	99.09	1001.29	20-May-03 05:39:00	99.92	1001.85
20-May-03 05:10:30	99.11	1001.29	20-May-03 05:39:30	99.95	1000.72
20-May-03 05:11:00	99.12	1001.28	20-May-03 05:40:00	99.91	1000.95
20-May-03 05:11:30	99.13	1001.28	20-May-03 05:40:30	99.80	1001.17
20-May-03 05:12:00	99.14	1001.27	20-May-03 05:41:00	99.70	1001.40
20-May-03 05:12:30	99.15	1001.27	20-May-03 05:41:30	99.60	1001.62
20-May-03 05:13:00	99.16	1001.26	20-May-03 05:42:00	99.50	1001.77
20-May-03 05:13:30	99.17	1001.26	20-May-03 05:42:30	99.40	1001.17
20-May-03 05:14:00	99.18	1001.25	20-May-03 05:43:00	99.30	1001.27
20-May-03 05:14:30	99.19	1001.25	20-May-03 05:43:30	99.19	1001.44
20-May-03 05:15:00	99.21	1001.32	20-May-03 05:44:00	99.09	1001.51
20-May-03 05:15:30	99.22	1001.41	20-May-03 05:44:30	98.99	1001.58
20-May-03 05:16:00	99.23	1001.49	20-May-03 05:45:00	98.89	1001.66
20-May-03 05:16:30	99.24	1001.57	20-May-03 05:45:30	98.79	1001.73
20-May-03 05:17:00	99.25	1001.65	20-May-03 05:46:00	98.82	1001.80
20-May-03 05:17:30	99.26	1001.74	20-May-03 05:46:30	99.15	1001.88
20-May-03 05:18:00	101.96	1001.37	20-May-03 05:47:00	99.48	1001.45
20-May-03 05:18:30	100.41	1001.23	20-May-03 05:47:30	99.81	1001.33
20-May-03 05:19:00	99.19	1001.20	20-May-03 05:48:00	99.84	1001.30
20-May-03 05:19:30	99.28	1001.17	20-May-03 05:48:30	99.83	1001.27
20-May-03 05:20:00	99.37	1001.15	20-May-03 05:49:00	99.83	1001.25
20-May-03 05:20:30	99.46	1001.12	20-May-03 05:49:30	99.82	1001.22
20-May-03 05:21:00	99.54	1001.09	20-May-03 05:50:00	99.82	1001.20
20-May-03 05:21:30	99.63	1001.06	20-May-03 05:50:30	99.81	1001.17
20-May-03 05:22:00	99.72	1001.04	20-May-03 05:51:00	99.80	1001.16
20-May-03 05:22:30	99.81	1001.01	20-May-03 05:51:30	99.80	1001.20
	% Power	NR		% Power	NR
	hc.a2175	hc.a2578		hc.a2175	hc.a2578
20-May-03 05:52:00	99.79	1001.23	20-May-03 06:21:00	100.02	1000.90
20-May-03 05:52:30	99.78	1001.26	20-May-03 06:21:30	99.99	1000.79
20-May-03 05:53:00	99.78	1001.30	20-May-03 06:22:00	99.95	1001.01
20-May-03 05:53:30	99.77	1001.31	20-May-03 06:22:30	99.92	1001.23
20-May-03 05:54:00	99.77	1001.31	20-May-03 06:23:00	99.89	1001.45
20-May-03 05:54:30	99.76	1001.30	20-May-03 06:23:30	99.86	1001.66
20-May-03 05:55:00	99.75	1001.30	20-May-03 06:24:00	99.83	1001.88
20-May-03 05:55:30	99.75	1001.30	20-May-03 06:24:30	99.80	1001.70
20-May-03 05:56:00	99.74	1001.29	20-May-03 06:25:00	99.76	1001.51
20-May-03 05:56:30	99.74	1001.29	20-May-03 06:25:30	99.73	1001.32
20-May-03 05:57:00	99.73	1001.29	20-May-03 06:26:00	99.70	1001.12
20-May-03 05:57:30	99.72	1001.28	20-May-03 06:26:30	99.67	1000.93
20-May-03 05:58:00	99.75	1001.28	20-May-03 06:27:00	99.64	1000.93

20-May-03 05:58:30	99.78	1001.27
20-May-03 05:59:00	99.81	1001.27
20-May-03 05:59:30	99.84	1001.27
20-May-03 06:00:00	99.87	1001.26
20-May-03 06:00:30	99.90	1001.26
20-May-03 06:01:00	99.93	1001.26
20-May-03 06:01:30	99.96	1001.25
20-May-03 06:02:00	99.99	1001.25
20-May-03 06:02:30	100.02	1001.25
20-May-03 06:03:00	100.05	1001.25
20-May-03 06:03:30	100.08	1001.25
20-May-03 06:04:00	100.11	1001.25
20-May-03 06:04:30	100.14	1001.25
20-May-03 06:05:00	100.17	1001.25
20-May-03 06:05:30	100.20	1001.25
20-May-03 06:06:00	100.22	1001.25
20-May-03 06:06:30	100.22	1001.25
20-May-03 06:07:00	100.22	1001.25
20-May-03 06:07:30	100.22	1001.24
20-May-03 06:08:00	100.22	1001.23
20-May-03 06:08:30	100.22	1001.23
20-May-03 06:09:00	100.21	1001.22
20-May-03 06:09:30	100.14	1001.21
20-May-03 06:10:00	100.07	1001.21
20-May-03 06:10:30	100.00	1001.20
20-May-03 06:11:00	99.93	1001.19
20-May-03 06:11:30	99.86	1001.19
20-May-03 06:12:00	99.79	1001.18
20-May-03 06:12:30	99.72	1001.17
20-May-03 06:13:00	99.65	1001.17
20-May-03 06:13:30	99.58	1001.16
20-May-03 06:14:00	99.50	1001.19
20-May-03 06:14:30	99.43	1001.56
20-May-03 06:15:00	99.36	1001.60
20-May-03 06:15:30	99.55	1000.84
20-May-03 06:16:00	99.44	1001.00
20-May-03 06:16:30	98.89	1001.25
20-May-03 06:17:00	98.34	1001.50
20-May-03 06:17:30	100.24	1001.76
20-May-03 06:18:00	100.21	1001.77
20-May-03 06:18:30	100.17	1001.63
20-May-03 06:19:00	100.14	1001.48
20-May-03 06:19:30	100.11	1001.34
20-May-03 06:20:00	100.08	1001.19
20-May-03 06:20:30	100.05	1001.05
20-May-03 06:27:30	99.61	1000.93
20-May-03 06:28:00	99.58	1000.93
20-May-03 06:28:30	99.54	1000.93
20-May-03 06:29:00	99.51	1000.92
20-May-03 06:29:30	99.48	1000.91
20-May-03 06:30:00	99.45	1000.89
Average	**98.8**	**1001.4**

	hc.a2175	hc.a2578
Min	**96.8**	**1000.7**
Max	**102.0**	**1001.9**
Min (psia)		1015.42
Max (psia)		1016.58

START 6/1/03 1:00 AM
STOP 6/30/03 1:00 PM
INTERVAL 5m

	% Power hc.a2175	NR hc.a2578		% Power hc.a2175	NR hc.a2578
6/1/03 1:00 AM	99.19	1001.61	6/1/03 5:45 AM	99.74	1001.98
6/1/03 1:05 AM	101.51	1001.48	6/1/03 5:50 AM	100.57	1001.63
6/1/03 1:10 AM	101.58	1001.14	6/1/03 5:55 AM	100.43	1001.46
6/1/03 1:15 AM	100.35	1001.50	6/1/03 6:00 AM	99.38	1001.20
6/1/03 1:20 AM	100.30	1001.66	6/1/03 6:05 AM	101.34	1002.13
6/1/03 1:25 AM	100.31	1001.60	6/1/03 6:10 AM	100.78	1001.87
6/1/03 1:30 AM	101.56	1001.43	6/1/03 6:15 AM	100.54	1001.62
6/1/03 1:35 AM	100.19	1002.00	6/1/03 6:20 AM	100.18	1002.15
6/1/03 1:40 AM	100.26	1001.36	6/1/03 6:25 AM	100.09	1001.89
6/1/03 1:45 AM	99.94	1001.05	6/1/03 6:30 AM	99.99	1001.80
6/1/03 1:50 AM	100.10	1002.66	6/1/03 6:35 AM	100.86	1001.97
6/1/03 1:55 AM	100.37	1001.69	6/1/03 6:40 AM	99.64	1001.70
6/1/03 2:00 AM	99.69	1001.50	6/1/03 6:45 AM	101.46	1001.57
6/1/03 2:05 AM	99.30	1001.55	6/1/03 6:50 AM	100.98	1001.43
6/1/03 2:10 AM	100.47	1001.26	6/1/03 6:55 AM	100.47	1001.92
6/1/03 2:15 AM	100.11	1001.46	6/1/03 7:00 AM	100.69	1001.89
6/1/03 2:20 AM	100.65	1001.56	6/1/03 7:05 AM	99.73	1001.90
6/1/03 2:25 AM	100.35	1000.98	6/1/03 7:10 AM	100.42	1001.61
6/1/03 2:30 AM	100.59	1001.51	6/1/03 7:15 AM	100.13	1001.48
6/1/03 2:35 AM	100.04	1001.14	6/1/03 7:20 AM	100.63	1001.17
6/1/03 2:40 AM	100.43	1001.70	6/1/03 7:25 AM	100.64	1001.43
6/1/03 2:45 AM	100.26	1001.57	6/1/03 7:30 AM	100.84	1001.60
6/1/03 2:50 AM	100.45	1001.29	6/1/03 7:35 AM	100.88	1001.79
6/1/03 2:55 AM	99.98	1001.54	6/1/03 7:40 AM	100.88	1002.02
6/1/03 3:00 AM	100.31	1001.49	6/1/03 7:45 AM	100.89	1001.14
6/1/03 3:05 AM	98.93	1001.28	6/1/03 7:50 AM	100.53	1002.02
6/1/03 3:10 AM	100.00	1002.10	6/1/03 7:55 AM	100.77	1001.77
6/1/03 3:15 AM	100.92	1001.56	6/1/03 8:00 AM	101.06	1001.77
6/1/03 3:20 AM	99.84	1001.31	6/1/03 8:05 AM	101.49	1001.79
6/1/03 3:25 AM	100.89	1001.60	6/1/03 8:10 AM	101.15	1001.66
6/1/03 3:30 AM	99.78	1001.85	6/1/03 8:15 AM	100.11	1001.50
6/1/03 3:35 AM	100.57	1001.54	6/1/03 8:20 AM	99.94	1001.39
6/1/03 3:40 AM	100.70	1001.34	6/1/03 8:25 AM	100.01	1001.36
6/1/03 3:45 AM	100.03	1001.59	6/1/03 8:30 AM	100.57	1001.32
6/1/03 3:50 AM	100.65	1001.67	6/1/03 8:35 AM	100.26	1001.29
6/1/03 3:55 AM	100.10	1001.58	6/1/03 8:40 AM	100.58	1001.25
6/1/03 4:00 AM	100.18	1001.55	6/1/03 8:45 AM	100.38	1001.37
6/1/03 4:05 AM	101.21	1001.56	6/1/03 8:50 AM	100.08	1001.50
6/1/03 4:10 AM	100.74	1001.29	6/1/03 8:55 AM	100.03	1001.60
6/1/03 4:15 AM	100.13	1001.35	6/1/03 9:00 AM	100.04	1001.66
6/1/03 4:20 AM	100.64	1001.80	6/1/03 9:05 AM	100.73	1001.70
6/1/03 4:25 AM	100.06	1001.61	6/1/03 9:10 AM	100.41	1001.74
6/1/03 4:30 AM	100.19	1001.81	6/1/03 9:15 AM	101.10	1001.78
6/1/03 4:35 AM	100.34	1001.85	6/1/03 9:20 AM	100.41	1001.04
6/1/03 4:40 AM	100.32	1001.86	6/1/03 9:25 AM	100.75	1001.43
6/1/03 4:45 AM	100.15	1001.73	6/1/03 9:30 AM	100.74	1001.83
6/1/03 4:50 AM	100.28	1001.57	6/1/03 9:35 AM	100.29	1001.89
6/1/03 4:55 AM	100.79	1001.45	6/1/03 9:40 AM	100.47	1001.80
6/1/03 5:00 AM	101.15	1001.65	6/1/03 9:45 AM	100.65	1001.78
6/1/03 5:05 AM	100.42	1001.35	6/1/03 9:50 AM	100.28	1001.61
6/1/03 5:10 AM	100.07	1001.71	6/1/03 9:55 AM	100.76	1001.44
6/1/03 5:15 AM	99.93	1002.02	6/1/03 10:00 AM	100.42	1001.28
6/1/03 5:20 AM	99.61	1001.85	6/1/03 10:05 AM	100.55	1001.11
6/1/03 5:25 AM	100.89	1001.73	6/1/03 10:10 AM	100.32	1000.94
6/1/03 5:30 AM	100.96	1001.53	6/1/03 10:15 AM	99.87	1000.78
6/1/03 5:35 AM	99.48	1001.68	6/1/03 10:20 AM	99.52	1001.96
6/1/03 5:40 AM	100.49	1001.52	6/1/03 10:25 AM	99.93	1001.88
	% Power hc.a2175	NR hc.a2578		% Power hc.a2175	NR hc.a2578

6/1/03 10:30 AM	100.48	1001.70	6/1/03 3:15 PM	99.76	1001.46
6/1/03 10:35 AM	99.96	1001.56	6/1/03 3:20 PM	100.50	1001.44
6/1/03 10:40 AM	99.99	1001.75	6/1/03 3:25 PM	100.68	1001.69
6/1/03 10:45 AM	100.45	1001.94	6/1/03 3:30 PM	99.90	1001.78
6/1/03 10:50 AM	100.43	1001.86	6/1/03 3:35 PM	99.90	1001.77
6/1/03 10:55 AM	99.83	1001.89	6/1/03 3:40 PM	99.84	1001.74
6/1/03 11:00 AM	100.06	1001.92	6/1/03 3:45 PM	100.54	1001.78
6/1/03 11:05 AM	100.25	1001.94	6/1/03 3:50 PM	99.82	1001.62
6/1/03 11:10 AM	100.52	1001.36	6/1/03 3:55 PM	100.54	1001.47
6/1/03 11:15 AM	101.19	1001.86	6/1/03 4:00 PM	101.05	1001.63
6/1/03 11:20 AM	100.00	1001.46	6/1/03 4:05 PM	101.38	1001.56
6/1/03 11:25 AM	100.14	1001.60	6/1/03 4:10 PM	100.38	1001.92
6/1/03 11:30 AM	100.04	1001.74	6/1/03 4:15 PM	100.48	1001.74
6/1/03 11:35 AM	100.06	1001.89	6/1/03 4:20 PM	100.12	1001.56
6/1/03 11:40 AM	100.07	1002.01	6/1/03 4:25 PM	99.95	1001.41
6/1/03 11:45 AM	101.11	1001.81	6/1/03 4:30 PM	100.66	1001.92
6/1/03 11:50 AM	100.53	1001.60	6/1/03 4:35 PM	101.44	1002.02
6/1/03 11:55 AM	100.13	1001.40	6/1/03 4:40 PM	99.77	1001.58
6/1/03 12:00 PM	100.65	1001.20	6/1/03 4:45 PM	100.16	1001.54
6/1/03 12:05 PM	101.22	1001.48	6/1/03 4:50 PM	100.55	1001.58
6/1/03 12:10 PM	101.56	1001.79	6/1/03 4:55 PM	100.27	1001.41
6/1/03 12:15 PM	98.95	1001.81	6/1/03 5:00 PM	100.25	1001.50
6/1/03 12:20 PM	100.63	1001.79	6/1/03 5:05 PM	99.37	1001.60
6/1/03 12:25 PM	100.76	1001.70	6/1/03 5:10 PM	100.41	1001.24
6/1/03 12:30 PM	101.45	1001.53	6/1/03 5:15 PM	100.88	1001.58
6/1/03 12:35 PM	99.90	1001.40	6/1/03 5:20 PM	99.96	1001.55
6/1/03 12:40 PM	100.34	1001.58	6/1/03 5:25 PM	100.27	1001.48
6/1/03 12:45 PM	100.43	1001.86	6/1/03 5:30 PM	100.15	1001.62
6/1/03 12:50 PM	100.11	1002.10	6/1/03 5:35 PM	100.75	1001.54
6/1/03 12:55 PM	101.00	1002.02	6/1/03 5:40 PM	99.91	1001.57
6/1/03 1:00 PM	100.54	1001.49	6/1/03 5:45 PM	99.71	1001.70
6/1/03 1:05 PM	99.82	1001.49	6/1/03 5:50 PM	99.77	1001.68
6/1/03 1:10 PM	100.03	1001.57	6/1/03 5:55 PM	100.02	1001.93
6/1/03 1:15 PM	100.60	1001.65	6/1/03 6:00 PM	100.27	1001.02
6/1/03 1:20 PM	100.14	1001.76	6/1/03 6:05 PM	100.27	1001.62
6/1/03 1:25 PM	99.68	1001.86	6/1/03 6:10 PM	100.27	1001.62
6/1/03 1:30 PM	100.28	1001.83	6/1/03 6:15 PM	100.79	1001.24
6/1/03 1:35 PM	100.58	1001.73	6/1/03 6:20 PM	100.66	1001.35
6/1/03 1:40 PM	100.41	1001.67	6/1/03 6:25 PM	99.91	1001.36
6/1/03 1:45 PM	100.05	1001.61	6/1/03 6:30 PM	100.31	1001.23
6/1/03 1:50 PM	100.15	1001.60	6/1/03 6:35 PM	99.90	1001.54
6/1/03 1:55 PM	100.35	1001.62	6/1/03 6:40 PM	99.43	1001.31
6/1/03 2:00 PM	99.47	1001.63	6/1/03 6:45 PM	101.44	1000.95
6/1/03 2:05 PM	100.34	1001.63	6/1/03 6:50 PM	100.20	1000.84
6/1/03 2:10 PM	101.03	1001.58	6/1/03 6:55 PM	100.52	1000.85
6/1/03 2:15 PM	100.51	1001.56	6/1/03 7:00 PM	101.69	1001.32
6/1/03 2:20 PM	100.88	1001.55	6/1/03 7:05 PM	100.50	1001.62
6/1/03 2:25 PM	100.38	1001.54	6/1/03 7:10 PM	99.30	1001.29
6/1/03 2:30 PM	100.32	1001.58	6/1/03 7:15 PM	99.30	1001.20
6/1/03 2:35 PM	100.26	1001.54	6/1/03 7:20 PM	100.31	1002.11
6/1/03 2:40 PM	100.47	1001.35	6/1/03 7:25 PM	100.22	1001.20
6/1/03 2:45 PM	100.70	1001.53	6/1/03 7:30 PM	100.26	1001.01
6/1/03 2:50 PM	100.54	1001.58	6/1/03 7:35 PM	100.01	1001.11
6/1/03 2:55 PM	100.65	1001.47	6/1/03 7:40 PM	99.29	1001.54
6/1/03 3:00 PM	101.04	1001.35	6/1/03 7:45 PM	99.87	1001.28
6/1/03 3:05 PM	100.13	1001.64	6/1/03 7:50 PM	100.45	1001.44
6/1/03 3:10 PM	99.94	1001.57	6/1/03 7:55 PM	100.56	1001.35
	% Power	NR		% Power	NR
	hc.a2175	hc.a2578		hc.a2175	hc.a2578

6/1/03 8:00 PM	100.26	1001.20	6/2/03 12:45 AM	99.38	1001.62
6/1/03 8:05 PM	100.43	1001.29	6/2/03 12:50 AM	100.45	1002.11
6/1/03 8:10 PM	100.49	1001.77	6/2/03 12:55 AM	100.74	1001.10

6/1/03 8:15 PM	100.54	1001.87	6/2/03 1:00 AM	100.63	1001.67
6/1/03 8:20 PM	100.12	1001.18	6/2/03 1:05 AM	99.64	1001.89
6/1/03 8:25 PM	100.16	1001.21	6/2/03 1:10 AM	99.09	1001.45
6/1/03 8:30 PM	100.17	1001.44	6/2/03 1:15 AM	100.90	1001.73
6/1/03 8:35 PM	99.59	1001.30	6/2/03 1:20 AM	100.13	1001.55
6/1/03 8:40 PM	99.74	1001.29	6/2/03 1:25 AM	99.67	1001.56
6/1/03 8:45 PM	100.68	1001.40	6/2/03 1:30 AM	100.64	1001.45
6/1/03 8:50 PM	100.38	1001.55	6/2/03 1:35 AM	100.20	1001.38
6/1/03 8:55 PM	99.90	1001.54	6/2/03 1:40 AM	100.53	1001.55
6/1/03 9:00 PM	100.31	1001.55	6/2/03 1:45 AM	100.92	1001.58
6/1/03 9:05 PM	100.54	1001.57	6/2/03 1:50 AM	100.84	1001.75
6/1/03 9:10 PM	100.71	1001.57	6/2/03 1:55 AM	100.02	1001.69
6/1/03 9:15 PM	100.86	1001.57	6/2/03 2:00 AM	100.80	1001.76
6/1/03 9:20 PM	99.87	1001.35	6/2/03 2:05 AM	99.73	1001.72
6/1/03 9:25 PM	99.52	1001.52	6/2/03 2:10 AM	100.33	1001.73
6/1/03 9:30 PM	100.18	1001.70	6/2/03 2:15 AM	99.79	1001.74
6/1/03 9:35 PM	100.41	1001.66	6/2/03 2:20 AM	99.63	1001.64
6/1/03 9:40 PM	100.02	1001.82	6/2/03 2:25 AM	99.48	1002.00
6/1/03 9:45 PM	101.31	1001.70	6/2/03 2:30 AM	100.16	1001.77
6/1/03 9:50 PM	100.35	1001.84	6/2/03 2:35 AM	100.27	1001.75
6/1/03 9:55 PM	100.39	1001.31	6/2/03 2:40 AM	101.30	1001.66
6/1/03 10:00 PM	100.56	1001.54	6/2/03 2:45 AM	100.96	1001.97
6/1/03 10:05 PM	100.50	1001.54	6/2/03 2:50 AM	99.57	1001.55
6/1/03 10:10 PM	100.41	1001.56	6/2/03 2:55 AM	100.30	1001.25
6/1/03 10:15 PM	99.78	1001.69	6/2/03 3:00 AM	100.15	1001.74
6/1/03 10:20 PM	100.44	1001.85	6/2/03 3:05 AM	99.27	1001.09
6/1/03 10:25 PM	100.16	1001.67	6/2/03 3:10 AM	99.90	1001.31
6/1/03 10:30 PM	100.07	1001.16	6/2/03 3:15 AM	99.75	1001.50
6/1/03 10:35 PM	99.95	1001.26	6/2/03 3:20 AM	100.09	1001.15
6/1/03 10:40 PM	100.87	1001.59	6/2/03 3:25 AM	99.36	1001.24
6/1/03 10:45 PM	99.71	1001.51	6/2/03 3:30 AM	99.95	1000.95
6/1/03 10:50 PM	100.13	1001.66	6/2/03 3:35 AM	100.20	1001.38
6/1/03 10:55 PM	100.67	1001.28	6/2/03 3:40 AM	100.20	1001.45
6/1/03 11:00 PM	100.28	1001.23	6/2/03 3:45 AM	100.21	1001.87
6/1/03 11:05 PM	100.30	1002.27	6/2/03 3:50 AM	100.67	1001.12
6/1/03 11:10 PM	100.32	1001.63	6/2/03 3:55 AM	100.93	1001.47
6/1/03 11:15 PM	100.37	1001.53	6/2/03 4:00 AM	100.29	1001.44
6/1/03 11:20 PM	99.30	1001.59	6/2/03 4:05 AM	99.65	1001.37
6/1/03 11:25 PM	100.15	1001.95	6/2/03 4:10 AM	99.84	1001.23
6/1/03 11:30 PM	99.83	1001.35	6/2/03 4:15 AM	100.74	1001.59
6/1/03 11:35 PM	100.63	1001.89	6/2/03 4:20 AM	100.62	1001.48
6/1/03 11:40 PM	99.92	1001.49	6/2/03 4:25 AM	100.41	1001.10
6/1/03 11:45 PM	100.17	1001.45	6/2/03 4:30 AM	99.92	1001.46
6/1/03 11:50 PM	99.59	1002.00	6/2/03 4:35 AM	99.44	1001.35
6/1/03 11:55 PM	100.29	1002.28	6/2/03 4:40 AM	100.09	1001.35
6/2/03 12:00 AM	100.69	1001.43	6/2/03 4:45 AM	100.41	1001.58
6/2/03 12:05 AM	99.75	1002.05	6/2/03 4:50 AM	99.88	1001.53
6/2/03 12:10 AM	100.88	1001.83	6/2/03 4:55 AM	100.41	1001.48
6/2/03 12:15 AM	99.14	1001.84	6/2/03 5:00 AM	100.65	1001.49
6/2/03 12:20 AM	100.95	1001.86	6/2/03 5:05 AM	100.07	1001.36
6/2/03 12:25 AM	98.95	1001.75	6/2/03 5:10 AM	100.62	1000.77
6/2/03 12:30 AM	100.90	1001.55	6/2/03 5:15 AM	101.54	1001.75
6/2/03 12:35 AM	100.51	1001.63	6/2/03 5:20 AM	99.46	1001.51
6/2/03 12:40 AM	99.52	1001.60	6/2/03 5:25 AM	100.34	1001.52
	% Power	NR		% Power	NR
	hc.a2175	hc.a2578		hc.a2175	hc.a2578

6/2/03 5:30 AM	100.05	1001.54	6/2/03 10:15 AM	100.36	1001.80
6/2/03 5:35 AM	100.31	1001.29	6/2/03 10:20 AM	99.53	1002.00
6/2/03 5:40 AM	100.50	1001.33	6/2/03 10:25 AM	100.42	1001.41
6/2/03 5:45 AM	100.43	1000.94	6/2/03 10:30 AM	100.52	1001.35
6/2/03 5:50 AM	100.38	1001.49	6/2/03 10:35 AM	100.61	1001.28
6/2/03 5:55 AM	100.34	1001.38	6/2/03 10:40 AM	100.32	1001.20

6/2/03 6:00 AM	100.16	1001.27	6/2/03 10:45 AM	99.15	1001.33
6/2/03 6:05 AM	99.80	1001.40	6/2/03 10:50 AM	99.95	1001.38
6/2/03 6:10 AM	100.75	1001.39	6/2/03 10:55 AM	100.22	1001.41
6/2/03 6:15 AM	100.47	1001.38	6/2/03 11:00 AM	100.86	1001.51
6/2/03 6:20 AM	100.81	1001.38	6/2/03 11:05 AM	100.57	1001.52
6/2/03 6:25 AM	100.81	1001.37	6/2/03 11:10 AM	100.04	1001.36
6/2/03 6:30 AM	100.60	1001.36	6/2/03 11:15 AM	100.12	1001.19
6/2/03 6:35 AM	100.44	1001.35	6/2/03 11:20 AM	100.64	1001.38
6/2/03 6:40 AM	100.29	1001.36	6/2/03 11:25 AM	100.61	1002.03
6/2/03 6:45 AM	100.14	1001.26	6/2/03 11:30 AM	100.98	1001.52
6/2/03 6:50 AM	100.55	1001.19	6/2/03 11:35 AM	98.87	1001.37
6/2/03 6:55 AM	99.95	1001.09	6/2/03 11:40 AM	100.49	1002.02
6/2/03 7:00 AM	100.24	1001.35	6/2/03 11:45 AM	101.13	1001.13
6/2/03 7:05 AM	99.81	1001.35	6/2/03 11:50 AM	99.75	1001.27
6/2/03 7:10 AM	99.99	1001.28	6/2/03 11:55 AM	99.68	1001.12
6/2/03 7:15 AM	100.89	1000.98	6/2/03 12:00 PM	100.76	1001.52
6/2/03 7:20 AM	100.59	1001.44	6/2/03 12:05 PM	100.13	1001.81
6/2/03 7:25 AM	99.14	1001.47	6/2/03 12:10 PM	100.19	1001.64
6/2/03 7:30 AM	99.96	1001.24	6/2/03 12:15 PM	99.70	1001.17
6/2/03 7:35 AM	99.57	1001.68	6/2/03 12:20 PM	100.44	1001.45
6/2/03 7:40 AM	99.71	1001.47	6/2/03 12:25 PM	100.37	1001.52
6/2/03 7:45 AM	99.86	1001.47	6/2/03 12:30 PM	100.06	1001.24
6/2/03 7:50 AM	99.96	1001.30	6/2/03 12:35 PM	100.48	1001.57
6/2/03 7:55 AM	99.94	1001.16	6/2/03 12:40 PM	100.49	1001.34
6/2/03 8:00 AM	99.94	1001.32	6/2/03 12:45 PM	100.07	1001.26
6/2/03 8:05 AM	99.95	1001.43	6/2/03 12:50 PM	100.89	1001.12
6/2/03 8:10 AM	101.66	1001.35	6/2/03 12:55 PM	100.75	1001.27
6/2/03 8:15 AM	101.18	1001.45	6/2/03 1:00 PM	100.48	1001.17
6/2/03 8:20 AM	99.92	1001.50	6/2/03 1:05 PM	100.20	1001.43
6/2/03 8:25 AM	100.24	1001.41	6/2/03 1:10 PM	100.12	1001.33
6/2/03 8:30 AM	99.99	1000.99	6/2/03 1:15 PM	99.95	1001.00
6/2/03 8:35 AM	100.43	1001.08	6/2/03 1:20 PM	99.78	1001.83
6/2/03 8:40 AM	99.32	1001.35	6/2/03 1:25 PM	99.62	1001.24
6/2/03 8:45 AM	99.62	1001.32	6/2/03 1:30 PM	99.45	1001.21
6/2/03 8:50 AM	99.42	1001.34	6/2/03 1:35 PM	100.06	1001.48
6/2/03 8:55 AM	100.43	1001.19	6/2/03 1:40 PM	99.73	1001.32
6/2/03 9:00 AM	99.91	1001.46	6/2/03 1:45 PM	99.75	1001.48
6/2/03 9:05 AM	99.92	1001.29	6/2/03 1:50 PM	100.60	1001.62
6/2/03 9:10 AM	99.92	1001.59	6/2/03 1:55 PM	99.94	1001.60
6/2/03 9:15 AM	100.45	1001.59	6/2/03 2:00 PM	100.88	1001.44
6/2/03 9:20 AM	99.69	1001.30	6/2/03 2:05 PM	101.16	1001.44
6/2/03 9:25 AM	99.35	1001.31	6/2/03 2:10 PM	100.18	1001.54
6/2/03 9:30 AM	100.48	1001.38	6/2/03 2:15 PM	100.34	1001.72
6/2/03 9:35 AM	101.04	1001.28	6/2/03 2:20 PM	100.65	1001.56
6/2/03 9:40 AM	99.25	1001.17	6/2/03 2:25 PM	100.31	1001.49
6/2/03 9:45 AM	99.86	1001.44	6/2/03 2:30 PM	99.51	1001.34
6/2/03 9:50 AM	99.38	1001.72	6/2/03 2:35 PM	99.80	1001.89
6/2/03 9:55 AM	100.92	1001.77	6/2/03 2:40 PM	100.17	1000.96
6/2/03 10:00 AM	99.72	1001.30	6/2/03 2:45 PM	100.11	1001.24
6/2/03 10:05 AM	100.37	1001.86	6/2/03 2:50 PM	100.06	1001.58
6/2/03 10:10 AM	100.52	1001.34	6/2/03 2:55 PM	100.02	1001.55
	% Power	NR		% Power	NR
	hc.a2175	hc.a2578		hc.a2175	hc.a2578

6/2/03 3:00 PM	100.40	1001.11	6/2/03 7:45 PM	99.97	1001.42
6/2/03 3:05 PM	100.37	1001.29	6/2/03 7:50 PM	100.10	1001.42
6/2/03 3:10 PM	100.22	1001.72	6/2/03 7:55 PM	100.71	1001.08
6/2/03 3:15 PM	100.44	1001.74	6/2/03 8:00 PM	101.31	1001.03
6/2/03 3:20 PM	100.80	1001.54	6/2/03 8:05 PM	100.03	1001.99
6/2/03 3:25 PM	100.50	1001.57	6/2/03 8:10 PM	100.02	1001.50
6/2/03 3:30 PM	100.11	1001.61	6/2/03 8:15 PM	100.15	1001.54
6/2/03 3:35 PM	100.41	1001.69	6/2/03 8:20 PM	100.07	1001.54
6/2/03 3:40 PM	100.60	1001.54	6/2/03 8:25 PM	99.33	1001.54

6/2/03 3:45 PM	100.16	1001.33
6/2/03 3:50 PM	99.99	1001.26
6/2/03 3:55 PM	100.32	1001.21
6/2/03 4:00 PM	100.91	1001.37
6/2/03 4:05 PM	100.05	1001.22
6/2/03 4:10 PM	98.99	1001.45
6/2/03 4:15 PM	99.48	1001.11
6/2/03 4:20 PM	100.35	1001.59
6/2/03 4:25 PM	101.37	1001.56
6/2/03 4:30 PM	99.78	1001.36
6/2/03 4:35 PM	100.08	1001.66
6/2/03 4:40 PM	100.47	1001.72
6/2/03 4:45 PM	99.75	1001.49
6/2/03 4:50 PM	100.66	1001.54
6/2/03 4:55 PM	99.88	1001.62
6/2/03 5:00 PM	99.52	1001.97
6/2/03 5:05 PM	100.15	1001.72
6/2/03 5:10 PM	100.25	1001.53
6/2/03 5:15 PM	99.82	1001.65
6/2/03 5:20 PM	100.30	1001.69
6/2/03 5:25 PM	101.01	1001.62
6/2/03 5:30 PM	100.30	1000.76
6/2/03 5:35 PM	100.21	1001.48
6/2/03 5:40 PM	100.38	1001.55
6/2/03 5:45 PM	100.66	1001.53
6/2/03 5:50 PM	100.95	1001.77
6/2/03 5:55 PM	100.50	1001.48
6/2/03 6:00 PM	100.37	1001.13
6/2/03 6:05 PM	99.84	1001.55
6/2/03 6:10 PM	100.30	1001.35
6/2/03 6:15 PM	99.91	1001.91
6/2/03 6:20 PM	99.56	1001.26
6/2/03 6:25 PM	100.08	1001.52
6/2/03 6:30 PM	99.68	1001.41
6/2/03 6:35 PM	100.53	1001.42
6/2/03 6:40 PM	100.08	1001.52
6/2/03 6:45 PM	100.44	1001.47
6/2/03 6:50 PM	101.24	1001.12
6/2/03 6:55 PM	99.95	1001.09
6/2/03 7:00 PM	100.61	1001.40
6/2/03 7:05 PM	99.22	1001.41
6/2/03 7:10 PM	100.53	1001.68
6/2/03 7:15 PM	100.78	1001.14
6/2/03 7:20 PM	100.15	1001.33
6/2/03 7:25 PM	101.05	1001.31
6/2/03 7:30 PM	100.23	1001.35
6/2/03 7:35 PM	99.71	1001.89
6/2/03 7:40 PM	100.10	1001.46
6/2/03 8:30 PM	100.12	1001.54
6/2/03 8:35 PM	100.38	1001.48
6/2/03 8:40 PM	100.50	1001.40
6/2/03 8:45 PM	100.82	1001.32
6/2/03 8:50 PM	99.84	1001.35
6/2/03 8:55 PM	100.41	1001.31
6/2/03 9:00 PM	100.38	1001.26
6/2/03 9:05 PM	100.18	1001.25
6/2/03 9:10 PM	100.54	1001.82
6/2/03 9:15 PM	100.15	1001.26
6/2/03 9:20 PM	101.05	1001.51
6/2/03 9:25 PM	100.93	1001.50
6/2/03 9:30 PM	100.28	1001.35
6/2/03 9:35 PM	100.47	1001.28
6/2/03 9:40 PM	100.54	1001.30
6/2/03 9:45 PM	99.44	1001.00
6/2/03 9:50 PM	100.27	1001.30
6/2/03 9:55 PM	101.21	1001.38
6/2/03 10:00 PM	100.04	1001.49
Average	100.28	1001.52

	hc.a2175	hc.a2578
Min	98.87	1000.76
Max	101.69	1002.66
Min (psia)		1015.46
Max (psia)		1017.36

ATTACHMENT 10.9
FLOW VERSUS POWER CALCULATION

1.0 *Purpose*

The purpose of this attachment is to determine the Total Steam Flow Versus Core Thermal Power (CTP) Relationship. A new linear regression will be developed based on the existing slope prior to the extended power uprate, the original rated flow at 100% power, and on the new flow and power values presented in the GE Heat Balance Task Report.

2.0 References

2.1 HC.RE-FT.ZZ-0002 Attachment 8, Rev. 4 - Reactor Engineering Procedure
2.2 GE-NE-0000-0005-3984 - GE Nuclear Energy Project Task Report for Hope Creek Generating Station Extended Power Uprate (Task T0100)
2.3 VTD PN0-A41-5050-0009, Rev 3, GE Reactor System Heat Balance Rated

3.0 Assumptions

It is assumed that the Main Steam Flow Rate at any given Thermal Power will remain the same after the power uprate as before the power uprate.

4.0 Design Inputs

Attachment 8 of HC.RE-FT.ZZ-0002 (Ref. 2.1) provides the following relationship which was based on the Original Thermal Licensing Power (OTLP):

CTP = 7.853 + (6.471 * Total Steam Flow)

The Original Thermal Licensing Power (OTLP) per VTD PN0-A41-5050-0009 (Ref. 2.3) is 14.159 Mlb/hr of Main Steam Flow at 100% power.

GE Task Report T0100 (Ref. 2.2) provides the following Main Steam Flow values:

CLTP (3339 MWt)	TPU (3840 MWt)
14.404 mlb/hr	16.773 Mlb/hr

5.0 Methodology

The original linear regression formula will be modified to determine Total Steam Flow at 10%, 20%, 30%, 40%, 50%, 60%, 70%, 80%, and 90% of the Original Licensed Thermal Power. The OLTP rated flow will be used at 100% and the GE supplied flow values will be used in relationship to 3339 MWt and 3840 MWt uprates. Then the OLTP values will be converted into % RTP expressed as 0 to 100% for the 3840 MWt uprate.

6.0 Calculation

The original linear regression formula is modified as follows to determine Total Steam Flow (TSF):

CTP = 7.853 + (6.471 * TSF) Equation 1

and

TSF = (CTP - 7.853) / 6.471 Equation 2

The OLTP values are converted into % RTP expressed as 0 to 100% for the 3840 MWt (116.6% OLTP) uprate by the following ratios.

116.6% OLTP (3840 MWt)

RTP = (% OLTP/116.6) * 100
(Equation 3)

RTP = (10/116.6) * 100
8.576

therefore:

% OLTP	TSF Mlb/hr (Eq. 2)	% RTP (3840 MWt) (Eq. 3)
10	0.3318	8.576
20	1.8771	17.153
30	3.4225	25.729
40	4.9679	34.305
50	6.5132	42.882
60	8.0586	51.458
70	9.6039	60.034
80	11.1493	68.611
90	12.6946	77.187
100	14.159	85.763
101.4	14.404	86.964
111.5	15.93	95.626
116.6	16.773	100.000

The new linear regression plotted from the above data is shown below for the 3840 MWt Uprate.

7.0 Graphic Representation and New Linear Regression Formulas

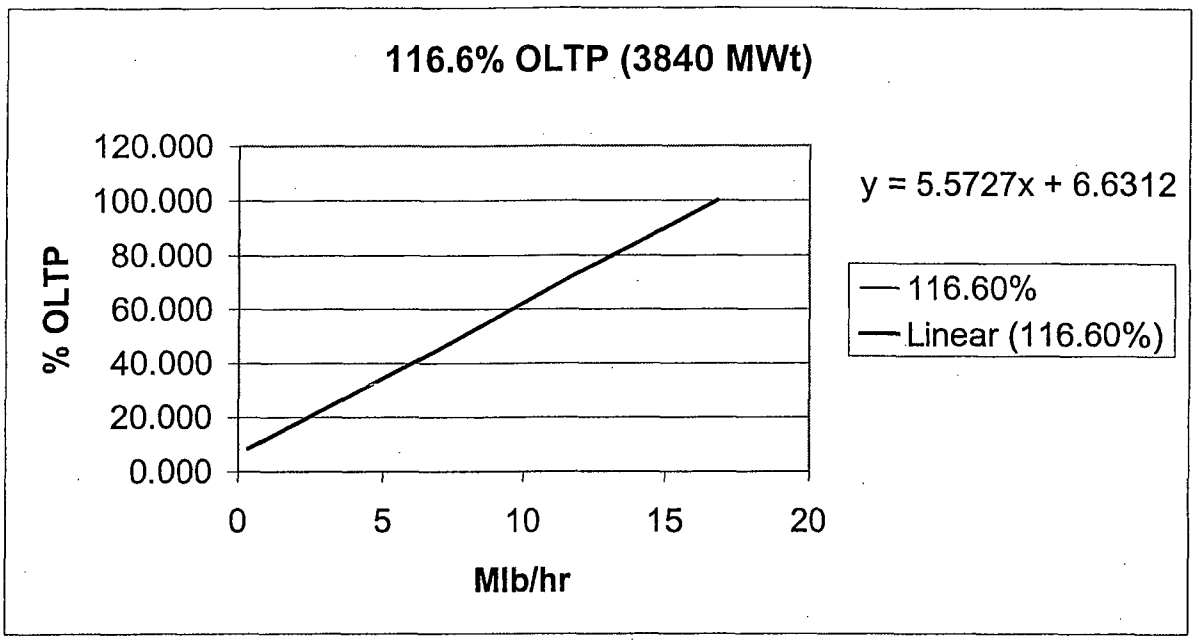

8.0 Summary and Conclusion

The new Total Steam Flow Versus Core Thermal Power (CTP) Relationship for the 116.6% (3840 MWt) Extended Power Uprate is:

CTP = 6.6312 + (5.5727 * Total Steam Flow) Equation 4

The calculated deviation between the values from the formulas above and the actual values are shown to be minimal in the tables below.

% OLTP	TSF mlb/hr (Eq. 2)	% RTP (116.6 % OLTP) (Eq. 3)	% RTP (116.6 % OLTP) (Eq. 4)	Deviation
10	0.3318	8.58	8.48	0.10
20	1.8771	17.15	17.09	0.06
30	3.4225	25.73	25.70	0.03
40	4.9679	34.31	34.32	-0.01
50	6.5132	42.88	42.93	-0.05
60	8.0586	51.46	51.54	-0.08
70	9.6039	60.03	60.15	-0.12
80	11.1493	68.61	68.76	-0.15
90	12.6946	77.19	77.37	-0.19
100	14.159	85.76	85.54	0.23
101.4	14.404	86.96	86.90	0.06
111.5	15.93	95.63	95.40	0.22
116.6	16.773	100.00	100.10	-0.10