Pacific Gas and Electric Company®

John S. Keenan
Senior Vice President
Generation & Chief Nuclear Officer

77 Beale Street, Mailcode B32
San Francisco, CA 94105

Mailing Address
Mail Code B32, Room 3235
P. O. Box 770000
San Francisco, CA 94177

415.973.4684
Internal: 223.4684
Fax: 415.973.2313

March 30, 2007

PG&E Letter HBL-07-002

U.S. Nuclear Regulatory Commission
ATTN: Document Control Desk
Washington, DC 20555-0001

Docket No. 50-133, OP-DPR-7
Humboldt Bay Power Plant Unit 3
Decommissioning Funding Report for Humboldt Bay Power Plant Unit 3

Dear Commissioners and Staff:

PG&E is submitting the decommissioning fund report for Humboldt Bay Power Plant (HBPP) Unit 3, pursuant to the requirements of 10 CFR 50.75(f).

Humboldt Bay Power Plant Unit 3

At the end of calendar year 2006, the market value of the HBPP Unit 3 (220 MWt) decommissioning trust funds was $304.4 million. PG&E estimates an additional $35.745 million (future nominal dollars) will need to be collected over the next 3 years to coincide with a decommissioning of HBPP Unit 3 in 2009. This estimate is based on a site-specific decommissioning cost estimate prepared by TLG Services, Inc. and adjusted per the Nuclear Decommissioning Cost Triennial Proceeding (NDCTP) Decision 07-01-003 from the California Public Utilities Commission (CPUC). The CPUC Decision includes the construction and operation of an Independent Spent Fuel Storage Installation (ISFSI) at HBPP that would be in operation until 2015 when all fuel would be removed from HBPP by the Department of Energy (DOE).

The market value of the HBPP trust is lower than the minimum amount of the NRC decommissioning estimate of $548.6 million (2007 dollars) that was calculated pursuant to the requirements specified in 10 CFR 50.75(c), which is based on a minimum 1200 MWt plant.

PG&E is confident the HBPP trust, with the noted additional contributions, will be sufficient to ensure successful decommissioning beginning in 2009 and maintaining the spent fuel in an ISFSI at HBPP until 2015.

Supporting Cost Estimates

Based on site-specific cost estimates prepared by TLG Services, Inc. and adjustments as a result of the NDCTP Decision 07-01-003, PG&E has estimated that the decommissioning costs are approximately $342.8 million (including $18.8 million disbursed from the Trust(s) through December 2006 and $324.0 million future radiological removal costs) for HBPP Unit 3 in 2007 dollars. These costs do not include

A145501

site restoration of the facilities ($8.2 million), nor spent fuel management until 2015 ($91.8 million).

To assure that sufficient funds will be available for decommissioning, PG&E has established external sinking trust fund accounts for HBPP Unit 3.

Supporting Enclosures

Supporting documentation for this report is included as Enclosures 1 through 5.

Enclosure 1 provides decommissioning funding status information in a format suggested by Nuclear Energy Institute (NEI) and the NRC.

Enclosure 2 provides information on the escalation of the required decommissioning funding amounts from 1986 dollars to 2007 dollars. As required by 10 CFR 50.75(c)(2), and using NUREG-1577, "Standard Review Plan on Power Reactor Licensee Financial Qualifications and Decommissioning Funding Assurance," Revision 1 and NUREG-1307, "Report on Waste Burial Charges," Revision 12, the information includes escalation factors for energy, labor, and waste burial costs.

Enclosure 3 contains the TLG Services, Inc. decommissioning cost estimate report prepared in October 2005 for PG&E for the HBPP Unit 3. The report provides cost estimates for the decommissioning of both the nuclear and non-nuclear facilities.

Enclosure 4 is the TLG Services, Inc. decommissioning cost estimate report prepared in October 2005 for PG&E for HBPP Unit 3. The TLG Services, Inc. cost estimate has then been adjusted to reflect the costs in 2007 dollars per CPUC Decision 07-01-003 by applying the escalation factors; adjusting the burial costs of Class A Low Level Radioactive Waste (LLRW) from $140 per cubic foot to $248 per cubic foot; and revising the contingency to 25 percent. The report provides cost estimates for decommissioning of both the nuclear and non-nuclear facilities, including the ISFSI.

Enclosure 5 is a cash flow of the total decommissioning of HBPP that identifies the monies for NRC scope (removal of radiological contamination), site restoration (including the non-radiological work) and the spent fuel management.

There are no Regulatory commitments in this letter. Should you have any questions in regard to this document please feel free to call Bob Kapus at (707) 444-0810.

Sincerely,

John S. Keenan

John S. Keenan
Senior Vice President – Generation and Chief Nuclear Officer

Enclosures
cc/enc: John B. Hickman
Bruce S. Mallett
INPO
PG Fossil Gen HBPP Humboldt Distribution

NRC Decommissioning Funding Status Report
Humboldt Bay Power Plant (HBPP) – Unit 3 (220 MWt)

(2 pages)

NRC Decommissioning Funding Status Report
Humboldt Bay Power Plant (HBPP) - Unit 3 (220 MWt)

As provided in 10 CFR 50.75(f)(1), each power reactor licensee is required to report to the NRC on a calendar year basis, beginning March 31, 1999, and annually thereafter, on the status of its decommissioning funding for each reactor that it owns and has closed.

	$ In Millions
1. The minimum decommissioning fund estimate, pursuant to 10 CFR 50.75 (b) and (c).[1]	
January 2007 dollars	$ 548.6
(HBPP is a shutdown unit with a Site Specific Cost Study; therefore, the minimum decommissioning fund estimate is based on the Site Specific Cost Study shown in item 8 of this enclosure.)	
2. The amount accumulated at the end of the calendar year preceding the date of the report for items included in 10 CFR 50.75 (b) and (c). (Alternatively, the total amount accumulated at the end of the calendar year preceding the date of the report can be reported here if the cover letter transmitting the report provides the total estimate and indicates what portion of that estimate is for items not included in 10 CFR 50.75 (b) and (c)).	
Market Value (December 2006 dollars)	$ 304.4
3. A schedule of the annual amounts remaining to be collected; for items in 10 CFR 50.75 (b) and (c). (Alternatively, the annual amounts remaining to be collected can include items beyond those required in 10 CFR 50.75 (b) and (c) if the cover letter transmitting the report provides a total cost estimate and indicates what portion of that estimate is for items that are not included in 10 CFR 50.75 (b) and (c). (See item 6 of this enclosure describing the collection of additional funds.)	
Amount remaining	$ 35.745
Number of years to collect	3 years
Annual amount to be collected	$ 11.915

[1] * The NRC formulas in section 10 CFR 50.75(c) include only those decommissioning costs incurred by licensees to remove a facility or site safely from service and reduce residual radioactivity to levels that permit: (1) release of the property for unrestricted use and termination of the license; or (2) release of the property under restricted conditions and termination of the license. The cost of dismantling or demolishing non-radiological systems and structures is not included in the NRC decommissioning cost estimates. The costs of managing and storing spent fuel on site until transfers to DOE are not included in the cost formulas.

4. The assumptions used regarding escalation in decommissioning cost, rates of earnings on decommissioning funds (assumes trust will be gradually converted to a more conservative, all fixed income portfolio after 2010), and rates of other factors used in funding projections:

Escalation in decommissioning costs	4.55 percent
Rate of Return on Qualified Trust 2006	5.39 percent
Rate of Return on Qualified Trust 2007	4.98 percent
Rate of Return on Qualified Trust 2008	4.80 percent
Rate of Return on Qualified Trust 2009	4.31 percent
Rate of Return on Qualified Trust (2010-2015)	4.13 percent

5. Any contracts upon which the licensee is relying pursuant to 10 CFR 50.75(e)(1)(v); NONE

6. Any modifications to a licensee's current method providing financial assurance occurring since the last submitted report. YES

   The CPUC granted $11.915 million to be collected beginning in 2007 for a 3 year period in Decision 07-01-003 dated January 11, 2007.

7. Any material changes to trust agreements. NONE

8. CPUC Submittal in 2007 Dollars in Millions:

Total Project (Decommission 2009)	$ 442.8
Scope Excluded from NRC calculations	$ 8.2
Scope of ISFSI from Licensing to Decommissioning in 2015	$ 79.3
Scope Decommissioned and disbursed from Trust(s)	$ 31.3
Total NRC Decommissioning Remaining Scope	$ 324.0

Calculation of Energy Escalation Factor
Reference NUREG-1307, Revision 12, Section 3.2

(15 pages)

Nuclear Regulatory Commission
Estimate of Decommission Costs for BWR
In 2007

	HBPP BWR (millions)	
Jan 1986 Estimate	114.8	
Escalated to 1999	128.9	(Table 2.1 in NUREG 1307 Rev 10 has no value for 1999 Burial)
Escalated to 2000	400.2	($360.9 in 2000 Submittal)
Escalated to 2001	412.4	($425.3 in 2001 Submittal)
Escalated to 2002	418.1	($445.6 in 2002 Submittal)
Escalated to 2003	437.3	($430.1 in 2003 Submittal)
Escalated to 2004	454.5	($439.6 in 2004 Submittal)
Escalated to 2005	485.7	($453.2 in 2005 Submittal)
Escalated to 2006	519.2	($494.3 in 2006 Submittal)
Escalated to 2007	548.6	

Jan 1986 based on 10 CFR 50.75 (c) Table of minimum amounts
BWR based on minimum 1, 200 MWt = ($104 + (.009xMWt)) million per unit

Calculating Overall Escalation Rate

BWR	Jan-86	Jan-99	Jan-00	Jan-01	Jan-02	Jan-03	Jan-04	Jan-05	Jan-06	Jan-07	Weight (1)
L (Labor)	1.0000	1.5624	1.6370	1.7183	1.7862	1.8630	1.9521	2.0200	2.0724	2.1321	0.65
E (Energy)	1.0000	0.8257	1.0220	1.1841	0.9715	1.2003	1.2131	1.4810	1.8656	1.8191	0.13
B (Burial)	1.0000	0.0000	10.4061	10.5540	10.7015	11.0993	11.5119	12.3889	13.3331	14.3491	0.22

BWR
Combined Escalation Rate for:

Jan-86	Jan-99	Jan-00	Jan-01	Jan-02	Jan-03	Jan-04	Jan-05	Jan-06	Jan-07
1.0000	1.1229	3.4862	3.5927	3.6417	3.8088	3.9592	4.2311	4.5229	4.7792

(1) from NUREG 1307 Revision 12, Report on Waste Burial Charges, Section 2 Summary, Page 3 ... where A, B, and C are the fractions of the total 1986 dollar costs that are attributable to labor (0.65), energy (0.13), and burial (0.22), respectively, and sum to 1.0.

(2) Jan-01, Jan-03, Jan-05 and Jan-07 B (Burial) value in this table see calculation notes in Development of B Component spreadsheet

Calculation of Energy Escalation Factor - REFERENCE NUREG-1307, REVISION 12, SECTION 3.2
Using Regional Indices SERIES ID: WPU0573 Light Fuel Oils (as of 03/07/07) and WPU0543 Industrial Electric Power (as of 03/07/07)

	PPI for Fuels & Related Products (1982 = 100) (P) =Industrial Energy Power	PPI for Light Fuel Oils (1982=100) (F) = Light Fuel Oils	REBASED TO 1986 = 100 PPI for Fuels & Related Products (1986 = 100) (P) =Industrial Energy Power BWR wt = 0.54	PPI for Light Fuel Oils (1986=100) (F) = Light Fuel Oils BWR wt = 0.46	Energy Escalation Factor (E) for BWR (Humboldt)
Jan-86	114.2	82.0	1.0000	1.0000	1.0000
Feb-86	115.0	62.4	1.0070	0.7610	0.8938
Mar-86	114.4	51.3	1.0018	0.6256	0.8287
Apr-86	113.7	49.8	0.9956	0.6073	0.8170
May-86	114.1	47.0	0.9991	0.5732	0.8032
Jun-86	115.3	44.7	1.0096	0.5451	0.7960
Jul-86	116.2	36.4	1.0175	0.4439	0.7537
Aug-86	116.3	40.1	1.0184	0.4890	0.7749
Sep-86	116.3	46.3	1.0184	0.5646	0.8097
Oct-86	113.0	43.1	0.9895	0.5256	0.7761
Nov-86	112.7	43.5	0.9869	0.5305	0.7769
Dec-86	112.3	45.6	0.9834	0.5561	0.7868
Jan-87	110.3	51.4	0.9658	0.6268	0.8099
Feb-87	109.8	53.1	0.9615	0.6476	0.8171
Mar-87	110.2	49.7	0.9650	0.6061	0.7999
Apr-87	109.9	52.0	0.9623	0.6341	0.8114
May-87	111.8	53.3	0.9790	0.6500	0.8277
Jun-87	113.9	55.1	0.9974	0.6720	0.8477
Jul-87	116.2	56.3	1.0175	0.6866	0.8653
Aug-87	115.7	59.4	1.0131	0.7244	0.8803
Sep-87	115.5	56.8	1.0114	0.6927	0.8648
Oct-87	111.0	59.3	0.9720	0.7232	0.8575
Nov-87	109.2	61.2	0.9562	0.7463	0.8597
Dec-87	109.6	58.1	0.9597	0.7085	0.8442
Jan-88	108.8	54.8	0.9527	0.6683	0.8219
Feb-88	109.0	51.5	0.9545	0.6280	0.8043
Mar-88	109.0	49.7	0.9545	0.6061	0.7942
Apr-88	109.1	53.3	0.9553	0.6500	0.8149
May-88	108.9	54.3	0.9536	0.6622	0.8195
Jun-88	117.2	50.6	1.0263	0.6171	0.8380
Jul-88	118.2	46.9	1.0350	0.5720	0.8220
Aug-88	118.3	46.8	1.0359	0.5707	0.8219
Sep-88	118.5	45.9	1.0377	0.5598	0.8178
Oct-88	114.2	42.3	1.0000	0.5159	0.7773
Nov-88	109.2	47.2	0.9562	0.5756	0.7811
Dec-88	110.5	50.6	0.9676	0.6171	0.8064
Jan-89	112.0	54.9	0.9807	0.6695	0.8376
Feb-89	112.0	54.0	0.9807	0.6585	0.8325
Mar-89	112.3	57.3	0.9834	0.6988	0.8525
Apr-89	112.4	61.5	0.9842	0.7500	0.8765
May-89	113.6	57.5	0.9947	0.7012	0.8597
Jun-89	119.8	53.3	1.0490	0.6500	0.8655
Jul-89	122.2	52.7	1.0701	0.6427	0.8735
Aug-89	122.4	53.5	1.0718	0.6524	0.8789
Sep-89	122.5	59.3	1.0727	0.7232	0.9119
Oct-89	117.2	64.0	1.0263	0.7805	0.9132

Calculation of Energy Escalation Factor - REFERENCE NUREG-1307, REVISION 12, SECTION 3.2
Using Regional Indices SERIES ID: WPU0573 Light Fuel Oils (as of 03/07/07) and WPU0543 Industrial Electric Power (as of 03/07/07)

	PPI for Fuels & Related Products (1982 = 100) (P) =Industrial Energy Power	PPI for Light Fuel Oils (1982=100) (F) = Light Fuel Oils	REBASED TO 1986 = 100 PPI for Fuels & Related Products (1986 = 100) (P) =Industrial Energy Power BWR wt = 0.54	PPI for Light Fuel Oils (1986=100) (F) = Light Fuel Oils BWR wt = 0.46	Energy Escalation Factor (E) for BWR (Humboldt)
Nov-89	113.5	64.4	0.9939	0.7854	0.8980
Dec-89	114.2	68.1	1.0000	0.8305	0.9220
Jan-90	114.9	85.3	1.0061	1.0402	1.0218
Feb-90	115.0	59.4	1.0070	0.7244	0.8770
Mar-90	115.4	60.4	1.0105	0.7366	0.8845
Apr-90	115.1	61.0	1.0079	0.7439	0.8865
May-90	117.0	58.4	1.0245	0.7122	0.8808
Jun-90	123.9	53.0	1.0849	0.6463	0.8832
Jul-90	124.4	51.6	1.0893	0.6293	0.8777
Aug-90	124.6	72.3	1.0911	0.8817	0.9948
Sep-90	125.0	87.3	1.0946	1.0646	1.0808
Oct-90	121.2	104.8	1.0613	1.2780	1.1610
Nov-90	120.2	98.9	1.0525	1.2061	1.1232
Dec-90	118.9	89.3	1.0412	1.0890	1.0632
Jan-91	124.2	82.9	1.0876	1.0110	1.0523
Feb-91	124.3	74.3	1.0884	0.9061	1.0046
Mar-91	124.3	61.6	1.0884	0.7512	0.9333
Apr-91	124.7	60.0	1.0919	0.7317	0.9262
May-91	128.2	59.6	1.1226	0.7268	0.9405
Jun-91	132.6	57.6	1.1611	0.7024	0.9501
Jul-91	134.5	58.1	1.1778	0.7085	0.9619
Aug-91	133.8	62.1	1.1716	0.7573	0.9810
Sep-91	133.8	65.4	1.1716	0.7976	0.9996
Oct-91	128.3	67.6	1.1235	0.8244	0.9859
Nov-91	123.1	71.0	1.0779	0.8659	0.9804
Dec-91	125.1	62.2	1.0954	0.7585	0.9405
Jan-92	125.9	54.4	1.1025	0.6634	0.9005
Feb-92	125.3	57.3	1.0972	0.6988	0.9139
Mar-92	125.8	56.0	1.1016	0.6829	0.9090
Apr-92	124.8	59.0	1.0928	0.7195	0.9211
May-92	128.5	62.1	1.1252	0.7573	0.9560
Jun-92	134.8	65.4	1.1804	0.7976	1.0043
Jul-92	135.6	64.6	1.1874	0.7878	1.0036
Aug-92	135.1	63.3	1.1830	0.7720	0.9939
Sep-92	135.9	65.6	1.1900	0.8000	1.0106
Oct-92	131.2	68.2	1.1489	0.8317	1.0030
Nov-92	125.5	64.2	1.0989	0.7829	0.9536
Dec-92	126.7	59.4	1.1095	0.7244	0.9323
Jan-93	127.1	59.0	1.1130	0.7195	0.9320
Feb-93	126.4	60.4	1.1068	0.7366	0.9365
Mar-93	126.7	63.2	1.1095	0.7707	0.9536
Apr-93	126.8	62.4	1.1103	0.7610	0.9496
May-93	127.5	62.6	1.1165	0.7634	0.9541
Jun-93	136.9	60.8	1.1988	0.7415	0.9884
Jul-93	137.1	57.0	1.2005	0.6951	0.9680
Aug-93	137.2	54.4	1.2014	0.6634	0.9539

Calculation of Energy Escalation Factor - REFERENCE NUREG-1307, REVISION 12, SECTION 3.2
Using Regional Indices SERIES ID: WPU0573 Light Fuel Oils (as of 03/07/07) and WPU0543 Industrial Electric Power (as of 03/07/07)

	PPI for Fuels & Related Products (1982 = 100) (P) =Industrial Energy Power	PPI for Light Fuel Oils (1982=100) (F) = Light Fuel Oils	REBASED TO 1986 = 100 PPI for Fuels & Related Products (1986 = 100) (P) =Industrial Energy Power BWR wt = 0.54	PPI for Light Fuel Oils (1986=100) (F) = Light Fuel Oils BWR wt = 0.46	Energy Escalation Factor (E) for BWR (Humboldt)
Sep-93	137.6	59.3	1.2049	0.7232	0.9833
Oct-93	131.9	65.4	1.1550	0.7976	0.9906
Nov-93	126.3	61.6	1.1060	0.7512	0.9428
Dec-93	126.0	51.4	1.1033	0.6268	0.8841
Jan-94	126.2	51.5	1.1051	0.6280	0.8856
Feb-94	125.9	57.5	1.1025	0.7012	0.9179
Mar-94	125.8	56.2	1.1016	0.6854	0.9101
Apr-94	125.4	54.7	1.0981	0.6671	0.8998
May-94	126.0	54.7	1.1033	0.6671	0.9027
Jun-94	133.5	54.1	1.1690	0.6598	0.9347
Jul-94	134.5	56.3	1.1778	0.6866	0.9518
Aug-94	134.5	57.5	1.1778	0.7012	0.9586
Sep-94	134.9	57.7	1.1813	0.7037	0.9616
Oct-94	129.1	57.7	1.1305	0.7037	0.9341
Nov-94	127.0	58.8	1.1121	0.7171	0.9304
Dec-94	127.4	54.7	1.1156	0.6671	0.9093
Jan-95	127.6	54.7	1.1173	0.6671	0.9102
Feb-95	128.0	53.3	1.1208	0.6500	0.9043
Mar-95	128.3	54.3	1.1235	0.6622	0.9113
Apr-95	126.4	57.1	1.1068	0.6963	0.9180
May-95	130.2	59.1	1.1401	0.7207	0.9472
Jun-95	135.3	55.8	1.1848	0.6805	0.9528
Jul-95	136.6	53.5	1.1961	0.6524	0.9460
Aug-95	136.5	55.6	1.1953	0.6780	0.9573
Sep-95	133.7	58.2	1.1708	0.7098	0.9587
Oct-95	131.4	57.8	1.1506	0.7049	0.9456
Nov-95	127.6	59.5	1.1173	0.7256	0.9371
Dec-95	127.7	60.6	1.1182	0.7390	0.9438
Jan-96	127.9	62.6	1.1200	0.7634	0.9560
Feb-96	127.1	59.7	1.1130	0.7280	0.9359
Mar-96	127.8	63.5	1.1191	0.7744	0.9605
Apr-96	129.1	74.7	1.1305	0.9110	1.0295
May-96	135.0	72.0	1.1821	0.8780	1.0423
Jun-96	137.5	62.8	1.2040	0.7659	1.0025
Jul-96	136.0	64.3	1.1909	0.7841	1.0038
Aug-96	136.2	66.5	1.1926	0.8110	1.0171
Sep-96	136.2	73.4	1.1926	0.8951	1.0558
Oct-96	131.2	79.7	1.1489	0.9720	1.0675
Nov-96	127.1	76.5	1.1130	0.9329	1.0301
Dec-96	127.7	76.1	1.1182	0.9280	1.0307
Jan-97	128.3	73.7	1.1235	0.8988	1.0201
Feb-97	128.1	72.3	1.1217	0.8817	1.0113
Mar-97	128.2	65.2	1.1226	0.7951	0.9720
Apr-97	127.3	65.3	1.1147	0.7963	0.9683
May-97	129.7	64.2	1.1357	0.7829	0.9734
Jun-97	135.1	60.8	1.1830	0.7415	0.9799

Calculation of Energy Escalation Factor - REFERENCE NUREG-1307, REVISION 12, SECTION 3.2
Using Regional Indices SERIES ID: WPU0573 Light Fuel Oils (as of 03/07/07) and WPU0543 Industrial Electric Power (as of 03/07/07)

	PPI for Fuels & Related Products (1982 = 100) (P) =Industrial Energy Power	PPI for Light Fuel Oils (1982=100) (F) = Light Fuel Oils	REBASED TO 1986 = 100 PPI for Fuels & Related Products (1986 = 100) (P) =Industrial Energy Power BWR wt = 0.54	PPI for Light Fuel Oils (1986=100) (F) = Light Fuel Oils BWR wt = 0.46	Energy Escalation Factor (E) for BWR (Humboldt)
Jul-97	135.9	57.8	1.1900	0.7049	0.9669
Aug-97	134.7	61.5	1.1795	0.7500	0.9819
Sep-97	136.0	60.4	1.1909	0.7366	0.9819
Oct-97	130.1	64.8	1.1392	0.7902	0.9787
Nov-97	127.9	65.8	1.1200	0.8024	0.9739
Dec-97	128.3	59.4	1.1235	0.7244	0.9399
Jan-98	127.4	54.1	1.1156	0.6598	0.9059
Feb-98	127.2	52.0	1.1138	0.6341	0.8932
Mar-98	126.7	48.3	1.1095	0.5890	0.8701
Apr-98	126.4	50.2	1.1068	0.6122	0.8793
May-98	129.2	50.0	1.1313	0.6098	0.8914
Jun-98	133.8	46.3	1.1716	0.5646	0.8924
Jul-98	134.8	45.0	1.1804	0.5488	0.8898
Aug-98	135.2	44.0	1.1839	0.5366	0.8861
Sep-98	135.2	48.3	1.1839	0.5890	0.9103
Oct-98	130.4	47.4	1.1419	0.5780	0.8825
Nov-98	127.6	46.2	1.1173	0.5634	0.8625
Dec-98	126.6	38.8	1.1086	0.4732	0.8163
Jan-99	126.1	40.9	1.1042	0.4988	0.8257
Feb-99	125.5	38.2	1.0989	0.4659	0.8077
Mar-99	125.5	42.8	1.0989	0.5220	0.8335
Apr-99	125.2	52.5	1.0963	0.6402	0.8865
May-99	127.4	52.6	1.1156	0.6415	0.8975
Jun-99	131.0	52.4	1.1471	0.6390	0.9134
Jul-99	133.9	58.7	1.1725	0.7159	0.9624
Aug-99	133.9	63	1.1725	0.7683	0.9866
Sep-99	134.1	67.6	1.1743	0.8244	1.0133
Oct-99	129.5	65.5	1.1340	0.7988	0.9798
Nov-99	127.5	71.3	1.1165	0.8695	1.0029
Dec-99	126.5	72.9	1.1077	0.8890	1.0071
Jan-00	126.8	75.3	1.1103	0.9183	1.0220
Feb-00	126.7	87.9	1.1095	1.0720	1.0922
Mar-00	126.7	89.7	1.1095	1.0939	1.1023
Apr-00	126.8	83.1	1.1103	1.0134	1.0658
May-00	128.6	82.9	1.1261	1.0110	1.0731
Jun-00	133.6	86.2	1.1699	1.0512	1.1153
Jul-00	136.2	88.7	1.1926	1.0817	1.1416
Aug-00	137.4	91.6	1.2032	1.1171	1.1636
Sep-00	137.8	110.1	1.2067	1.3427	1.2692
Oct-00	134.1	108.6	1.1743	1.3244	1.2433
Nov-00	130.9	108.4	1.1462	1.3220	1.2271
Dec-00	132.7	100.6	1.1620	1.2268	1.1918
Jan-01	136.4	96.1	1.1944	1.1720	1.1841
Feb-01	136.4	91.6	1.1944	1.1171	1.1588
Mar-01	136.5	83.1	1.1953	1.0134	1.1116
Apr-01	135.1	86.2	1.1830	1.0512	1.1224

Calculation of Energy Escalation Factor - REFERENCE NUREG-1307, REVISION 12, SECTION 3.2
Using Regional Indices SERIES ID: WPU0573 Light Fuel Oils (as of 03/07/07) and WPU0543 Industrial Electric Power (as of 03/07/07)

	PPI for Fuels & Related Products (1982 = 100) (P) =Industrial Energy Power	PPI for Light Fuel Oils (1982=100) (F) = Light Fuel Oils	REBASED TO 1986 = 100 PPI for Fuels & Related Products (1986 = 100) (P) =Industrial Energy Power BWR wt = 0.54	PPI for Light Fuel Oils (1986=100) (F) = Light Fuel Oils BWR wt = 0.46	Energy Escalation Factor (E) for BWR (Humboldt)
May-01	136.2	94.2	1.1926	1.1488	1.1725
Jun-01	148.4	90.2	1.2995	1.1000	1.2077
Jul-01	149.5	81.3	1.3091	0.9915	1.1630
Aug-01	148.9	83.2	1.3039	1.0146	1.1708
Sep-01	148.2	93	1.2977	1.1341	1.2225
Oct-01	143.8	76.8	1.2592	0.9366	1.1108
Nov-01	137.3	70.5	1.2023	0.8598	1.0447
Dec-01	136.9	56.6	1.1988	0.6902	0.9649
Jan-02	136.3	58.3	1.1935	0.7110	0.9715
Feb-02	135.4	59.6	1.1856	0.7268	0.9746
Mar-02	135.7	69.1	1.1883	0.8427	1.0293
Apr-02	135.4	76.4	1.1856	0.9317	1.0688
May-02	137.9	75	1.2075	0.9146	1.0728
Jun-02	143.6	71.4	1.2574	0.8707	1.0796
Jul-02	144.9	75.5	1.2688	0.9207	1.1087
Aug-02	145.0	77.9	1.2697	0.9500	1.1226
Sep-02	145.8	89.5	1.2767	1.0915	1.1915
Oct-02	140.0	95.1	1.2259	1.1598	1.1955
Nov-02	139.5	82.8	1.2215	1.0098	1.1241
Dec-02	139.6	84.6	1.2224	1.0317	1.1347
Jan-03	140.3	95.7	1.2285	1.1671	1.2003
Feb-03	140.6	120.4	1.2312	1.4683	1.3402
Mar-03	143.3	128.9	1.2548	1.5720	1.4007
Apr-03	144.3	98.3	1.2636	1.1988	1.2338
May-03	145.1	85.5	1.2706	1.0427	1.1657
Jun-03	148.3	87.2	1.2986	1.0634	1.1904
Jul-03	151.6	90.1	1.3275	1.0988	1.2223
Aug-03	151.3	94.1	1.3249	1.1476	1.2433
Sep-03	152.0	88.2	1.3310	1.0756	1.2135
Oct-03	147.4	97.8	1.2907	1.1927	1.2456
Nov-03	142.7	93.0	1.2496	1.1341	1.1965
Dec-03	142.9	95.8	1.2513	1.1683	1.2131
Jan-04	143.1	106.8	1.2531	1.3024	1.2758
Feb-04	143.1	100.8	1.2531	1.2293	1.2421
Mar-04	143.1	107.8	1.2531	1.3146	1.2814
Apr-04	143.1	115.2	1.2531	1.4049	1.3229
May-04	144.2	116	1.2627	1.4146	1.3326
Jun-04	152.4	111.5	1.3345	1.3598	1.3461
Jul-04	152.2	119.3	1.3327	1.4549	1.3889
Aug-04	154.0	131.1	1.3485	1.5988	1.4636
Sep-04	154.0	136.8	1.3485	1.6683	1.4956
Oct-04	145.8	161.7	1.2767	1.9720	1.5965
Nov-04	144.9	153.6	1.2688	1.8732	1.5468
Dec-04	146.2	133.8	1.2802	1.6317	1.4419
Jan-05	148.9	138.5	1.3039	1.6890	1.4810
Feb-05	148.0	146	1.2960	1.7805	1.5188

Calculation of Energy Escalation Factor - REFERENCE NUREG-1307, REVISION 12, SECTION 3.2
Using Regional Indices SERIES ID: WPU0573 Light Fuel Oils (as of 03/07/07) and WPU0543 Industrial Electric Power (as of 03/07/07)

	PPI for Fuels & Related Products (1982 = 100) (P) =Industrial Energy Power	PPI for Light Fuel Oils (1982=100) (F) = Light Fuel Oils	REBASED TO 1986 = 100 PPI for Fuels & Related Products (1986 = 100) (P) =Industrial Energy Power BWR wt = 0.54	PPI for Light Fuel Oils (1986=100) (F) = Light Fuel Oils BWR wt = 0.46	Energy Escalation Factor (E) for BWR (Humboldt)
Mar-05	148.1	169.4	1.2968	2.0659	1.6506
Apr-05	148.7	170.9	1.3021	2.0841	1.6618
May-05	151.1	165.3	1.3231	2.0159	1.6418
Jun-05	159.7	180.6	1.3984	2.2024	1.7683
Jul-05	162.1	186.2	1.4194	2.2707	1.8110
Aug-05	162.5	194.5	1.4229	2.3720	1.8595
Sep-05	162.8	209.9	1.4256	2.5598	1.9473
Oct-05	159.5	252.0	1.3967	3.0732	2.1679
Nov-05	161.1	199.1	1.4107	2.4280	1.8787
Dec-05	161.4	193.6	1.4133	2.3610	1.8492
Jan-06	167.0	191.8	1.4623	2.3390	1.8656
Feb-06	168.6	190.0	1.4764	2.3171	1.8631
Mar-06	167.4	199.2	1.4658	2.4293	1.9090
Apr-06	169.6	221.9	1.4851	2.7061	2.0468
May-06	170.8	231.4	1.4956	2.8220	2.1057
Jun-06	181.2	238.1	1.5867	2.9037	2.1925
Jul-06	181.9	231.6	1.5928	2.8244	2.1593
Aug-06	180.2	241.4	1.5779	2.9439	2.2063
Sep-06	181.0	203.1	1.5849	2.4768	1.9952
Oct-06	171.2	198.9	1.4991	2.4256	1.9253
Nov-06	168.0	198.9	1.4711	2.4256	1.9102
Dec-06	167.6	201.4	1.4676	2.4561	1.9223
Jan-07	170.8	180.3	1.4956	2.1988	1.8191

Oct 06 through Jan 07 are Preliminary Values from PPI Indices

Calculation of Labor Escalation Factor - REFERENCE NUREG-1307, REVISION 12, SECTION 3.1
Using Regional Indices SERIES ID: CIU2010000000240I (as of 03/07/07)
Jan '86 adjusted to reflect NUREG 1307 Rev 12 Scaling Factor for West Labor (Pg 7)
Note 1: The Base Labor factor was re-indexed in December 2005, at which time the index was reset to 100.

	Employment Cost Indust West Region Private Industry (1989=100)	Labor Escalation Factor
Jan-86	89.8	1.00000
Feb-86		
Mar-86		
Apr-86	90.8	1.01114
May-86		
Jun-86		
Jul-86	91.2	1.01559
Aug-86		
Sep-86		
Oct-86	91.6	1.02004
Nov-86		
Dec-86		
Jan-87	92.5	1.03007
Feb-87		
Mar-87		
Apr-87	92.6	1.03118
May-87		
Jun-87		
Jul-87	93.7	1.04343
Aug-87		
Sep-87		
Oct-87	94.1	1.04788
Nov-87		
Dec-87		
Jan-88	95.4	1.06236
Feb-88		
Mar-88		
Apr-88	96.3	1.07238
May-88		
Jun-88		
Jul-88	97	1.08018
Aug-88		
Sep-88		
Oct-88	97.7	1.08797
Nov-88		
Dec-88		
Jan-89	98.8	1.10022
Feb-89		
Mar-89		
Apr-89	100	1.11359
May-89		
Jun-89		
Jul-89	101	1.12472
Aug-89		
Sep-89		

Calculation of Labor Escalation Factor - REFERENCE NUREG-1307, REVISION 12, SECTION 3.1
Using Regional Indices SERIES ID: CIU2010000000240I (as of 03/07/07)
Jan '86 adjusted to reflect NUREG 1307 Rev 12 Scaling Factor for West Labor (Pg 7)
Note 1: The Base Labor factor was re-indexed in December 2005, at which time the index was reset to 100.

	Employment Cost Indust West Region Private Industry (1989=100)	Labor Escalation Factor
Oct-89	101.8	1.13363
Nov-89		
Dec-89		
Jan-90	103.3	1.15033
Feb-90		
Mar-90		
Apr-90	104.5	1.16370
May-90		
Jun-90		
Jul-90	105.6	1.17595
Aug-90		
Sep-90		
Oct-90	106.3	1.18374
Nov-90		
Dec-90		
Jan-91	107.5	1.19710
Feb-91		
Mar-91		
Apr-91	108.9	1.21269
May-91		
Jun-91		
Jul-91	110	1.22494
Aug-91		
Sep-91		
Oct-91	110.9	1.23497
Nov-91		
Dec-91		
Jan-92	111.9	1.24610
Feb-92		
Mar-92		
Apr-92	112.9	1.25724
May-92		
Jun-92		
Jul-92	114.1	1.27060
Aug-92		
Sep-92		
Oct-92	114.9	1.27951
Nov-92		
Dec-92		
Jan-93	116.2	1.29399
Feb-93		
Mar-93		
Apr-93	116.4	1.29621
May-93		
Jun-93		

Calculation of Labor Escalation Factor - REFERENCE NUREG-1307, REVISION 12, SECTION 3.1
Using Regional Indices SERIES ID: CIU2010000000240I (as of 03/07/07)
Jan '86 adjusted to reflect NUREG 1307 Rev 12 Scaling Factor for West Labor (Pg 7)
Note 1: The Base Labor factor was re-indexed in December 2005, at which time the index was reset to 100.

	Employment Cost Indust West Region Private Industry (1989=100)	Labor Escalation Factor
Jul-93	117.8	1.31180
Aug-93		
Sep-93		
Oct-93	118.1	1.31514
Nov-93		
Dec-93		
Jan-94	119.4	1.32962
Feb-94		
Mar-94		
Apr-94	120.5	1.34187
May-94		
Jun-94		
Jul-94	121.3	1.35078
Aug-94		
Sep-94		
Oct-94	121.7	1.35523
Nov-94		
Dec-94		
Jan-95	122.6	1.36526
Feb-95		
Mar-95		
Apr-95	123.4	1.37416
May-95		
Jun-95		
Jul-95	123.9	1.37973
Aug-95		
Sep-95		
Oct-95	125	1.39198
Nov-95		
Dec-95		
Jan-96	125.9	1.40200
Feb-96		
Mar-96		
Apr-96	127.3	1.41759
May-96		
Jun-96		
Jul-96	128.3	1.42873
Aug-96		
Sep-96		
Oct-96	128.9	1.43541
Nov-96		
Dec-96		
Jan-97	130.3	1.45100
Feb-97		
Mar-97		

Calculation of Labor Escalation Factor - REFERENCE NUREG-1307, REVISION 12, SECTION 3.1
Using Regional Indices SERIES ID: CIU2010000000240I (as of 03/07/07)
Jan '86 adjusted to reflect NUREG 1307 Rev 12 Scaling Factor for West Labor (Pg 7)
Note 1: The Base Labor factor was re-indexed in December 2005, at which time the index was reset to 100.

	Employment Cost Indust West Region Private Industry (1989=100)	Labor Escalation Factor
Apr-97	131.4	1.46325
May-97		
Jun-97		
Jul-97	132.5	1.47550
Aug-97		
Sep-97		
Oct-97	133.4	1.48552
Nov-97		
Dec-97		
Jan-98	135.2	1.50557
Feb-98		
Mar-98		
Apr-98	136.6	1.52116
May-98		
Jun-98		
Jul-98	138.5	1.54232
Aug-98		
Sep-98		
Oct-98	140	1.55902
Nov-98		
Dec-98		
Jan-99	140.3	1.56236
Feb-99		
Mar-99		
Apr-99	142.1	1.58241
May-99		
Jun-99		
Jul-99	143.3	1.59577
Aug-99		
Sep-99		
Oct-99	144.7	1.61136
Nov-99		
Dec-99		
Jan-00	147	1.63697
Feb-00		
Mar-00		
Apr-00	148.8	1.65702
May-00		
Jun-00		
Jul-00	150.8	1.67929
Aug-00		
Sep-00		
Oct-00	151.8	1.69042
Nov-00		
Dec-00		

Calculation of Labor Escalation Factor - REFERENCE NUREG-1307, REVISION 12, SECTION 3.1
Using Regional Indices SERIES ID: CIU2010000000240I (as of 03/07/07)
Jan '86 adjusted to reflect NUREG 1307 Rev 12 Scaling Factor for West Labor (Pg 7)
Note 1: The Base Labor factor was re-indexed in December 2005, at which time the index was reset to 100.

	Employment Cost Indust West Region Private Industry (1989=100)	Labor Escalation Factor
Jan-01	154.3	1.71826
Feb-01		
Mar-01		
Apr-01	156	1.73719
May-01		
Jun-01		
Jul-01	157.6	1.75501
Aug-01		
Sep-01		
Oct-01	159.4	1.77506
Nov-01		
Dec-01		
Jan-02	160.4	1.78619
Feb-02		
Feb-02		
Mar-02		
Apr-02	162.9	1.81403
May-02		
Jun-02		
Jul-02	163.8	1.82405
Aug-02		
Sep-02		
Oct-02	165	1.83742
Nov-02		
Dec-02		
Jan-03	167.3	1.86303
Feb-03		
Mar-03		
Apr-03	169.5	1.88753
May-03		
Jun-03		
Jul-03	171.4	1.90869
Aug-03		
Sep-03		
Oct-03	172.2	1.91759
Nov-03		
Dec-03		
Jan-04	175.3	1.95212
Feb-04		
Mar-04		
Apr-04	176.8	1.96882
May-04		
Jun-04		
Jul-04	178.1	1.98330
Aug-04		

Calculation of Labor Escalation Factor - REFERENCE NUREG-1307, REVISION 12, SECTION 3.1
Using Regional Indices SERIES ID: CIU2010000000240I (as of 03/07/07)
Jan '86 adjusted to reflect NUREG 1307 Rev 12 Scaling Factor for West Labor (Pg 7)
Note 1: The Base Labor factor was re-indexed in December 2005, at which time the index was reset to 100.

	Employment Cost Indust West Region Private Industry (1989=100)	Labor Escalation Factor
Sep-04		
Oct-04	179.0	1.99332
Nov-04		
Dec-04		
Jan-05	181.4	2.02004
Feb-05		
Mar-05		
Apr-05	183.3	2.04120
May-05		
Jun-05		
Jul-05	184	2.04900
Aug-05		
Sep-05		
Oct-05 (Note 1)	100	2.06000
Nov-05		
Dec-05		
Jan-06	100.6	2.07236
Feb-06		
Mar-06		
Apr-06	101.8	2.09708
May-06		
Jun-06		
Jul-06	102.5	2.11150
Aug-06		
Sep-06		
Oct-06	103	2.12180
Nov-06		
Dec-06		
Jan-07	103.5	2.13210

Jan-07 is an estimate based on the difference between Jul-06 and Oct-06 added to Oct-06

Development of Burial Escalation
Developed from NUREG-1307 Revision 12
Table 2.1 "VALUES OF B SUB-X AS A FUNCTION OF LLW BURIAL SITE, WASTE VENDOR, AND YEAR" (Summary for non-Atlantic Compact)

	BWR Burial Costs (South Carolina)	**BWR Restated to 1986 = 100**
1986	1.561	1.0000
1987		
1988	1.831	1.1730
1989		
1990		
1991	2.361	1.5125
1992		
1993	9.434	6.0436
1994	9.794	6.2742
1995	10.42	6.6752
1996	10.379	6.6489
1997	13.837	8.8642
1998	13.948	8.9353
1999		0.0000
2000	16.244	10.4061
2001	16.474	10.5535
2002	16.705	10.7015
2003	17.326	11.0993
2004	17.970	11.5119
2005	19.339	12.3889
2006	20.813	13.3331
2007	22.399	14.3491

Table 2.1 Note ('c) From 7/1/95 through 6/30/2000 access was allowed for all states except North Carolina. Effective 7/1/2000 rates are based on whether a waste generator is or is not a member of the Atlantic Compact.

2001 has no information in NUREG-1307 Rev 12. 2001 is an estimate that is calculated by applying the average % change between 2000 and 2002 and adding to the 2000 base

2003 has no information in NUREG-1307 Rev 12. 2003 is an estimate that is calculated by applying the average % change between 2002 and 2004 and adding to the 2002 base

2005 has no information in NUREG-1307 Rev 12. 2005 is an estimate that is calculated by applying the average % change between 2004 and 2006 and adding to the 2004 base.

2007 has no information in NUREG-1307 Rev 12. 2007 is an estimate that is calculated by applying the average % change between 2004 and 2006 and adding to the 2006 base.

Enclosure 3
PG&E Letter HBL-07-002

Decommissioning Cost Study Report for the Humboldt Bay Power Plant Prepared by TLG Services, Inc. Document P01-1513-002, Rev. 0 October 2005

DECOMMISSIONING COST STUDY

for the

HUMBOLDT BAY POWER PLANT UNIT 3

2009 SAFSTOR

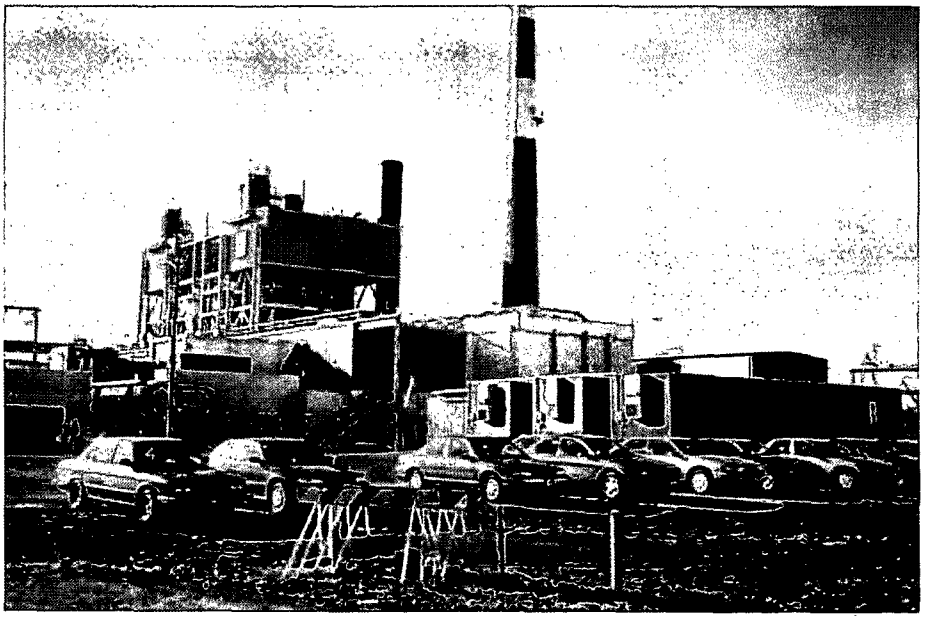

prepared for

PACIFIC GAS & ELECTRIC COMPANY

prepared by

TLG Services, Inc.
Bridgewater, Connecticut

October 2005

APPROVALS

Project Engineer	Thomas J. Garrett	10/11/05 Date
Project Manager	Geoffrey M. Griffiths	10.11.05 Date
Technical Manager	Francis W. Seymore	10/11/05 Date
Quality Assurance Manager	Thomas L. Williamson	10/11/05 Date

TABLE OF CONTENTS

SECTION **PAGE**

EXECUTIVE SUMMARY ..... **vii**

1. INTRODUCTION **1-1**
1.1 Objective of Study 1-1
1.2 Site Description 1-1
1.3 Regulatory Guidance 1-2
1.3.1 Nuclear Waste Policy Act 1-4
1.3.2 Low-Level Radioactive Waste Policy Amendments Act 1-6
1.3.3 Radiological Criteria for License Termination 1-7

2. SAFSTOR DECOMMISSIONING ACTIVITIES **2-1**
2.1 Period 2 – Safe Storage and Decommissioning Preparations 2-2
2.2 Period 3 – Preparations 2-3
2.2.1 Engineering and Planning 2-3
2.2.2 Site Preparations 2-4
2.3 Period 4 – Decommissioning Operations and License Termination 2-4
2.3.1 System Removal – Wet Fuel 2-5
2.3.2 Fuel Transfer 2-5
2.3.3 System Removal – Dry Fuel (ISFSI) 2-5
2.3.4 Building Demolition 2-7
2.3.5 Final Site Survey – License Termination 2-8
2.4 Period 5 – Site Restoration 2-8
2.5 Post-Period 5 – ISFSI Operations and Demolition 2-9

3. COST ESTIMATE **3-1**
3.1 Basis of Estimate 3-1
3.2 Methodology 3-2
3.3 Financial Components of the Cost Model 3-3
3.3.1 Contingency 3-4
3.3.2 Financial Risk 3-6
3.4 Site Specific Considerations 3-8
3.4.1 Spent Fuel Disposition 3-8
3.4.2 Reactor Vessel and Internal Components 3-8

TABLE OF CONTENTS
(continued)

SECTION **PAGE**

3.4.3 Main Turbine and Condenser 3-9
3.4.4 Plant Systems 3-10
3.4.5 Humboldt Bay Unit 3 Facilities 3-10
3.4.6 Transportation Methods 3-13
3.4.7 Coordination with Units 1 and 2 3-14
3.4.8 Site Conditions Following Decommissioning 3-14
3.5 Assumptions 3-15
3.5.1 Estimating Basis 3-15
3.5.2 Labor Costs 3-15
3.5.3 General 3-16
3.6 Cost Estimate Summary 3-18

4. SCHEDULE ESTIMATE 4-1
4.1 Schedule Estimate Assumptions 4-1
4.2 Project Schedule 4-2

5. RADIOACTIVE WASTE 5-1
5.1 General 5-1
5.2 Class A Waste and Recycling 5-1
5.3 Class B Waste 5-2
5.4 Class C Waste 5-2
5.5 Greater Than Class C Waste 5-2

6. RESULTS 6-1

7. REFERENCES 7-1

TABLE OF CONTENTS
(continued)

SECTION **PAGE**

TABLES

	Summary of Decommissioning Cost Contributors	xiii
3.1a	Schedule of Expenditures	3-19
3.1b	Schedule of Expenditures, Excluding CPUC Disallowances	3-20
5.1	Decommissioning Waste Disposal Summary	5-3
6.1	Summary of Decommissioning Cost Contributors	6-4

FIGURES

1.1	Layout of the Nuclear Plant Site and Surrounding Area	1-9
1.2	Schematic Diagram of the Vessel and Internals	1-10
1.3	Sectional View Through the Caisson	1-11
4.1	Decommissioning Timeline	4-3

APPENDICES

A	Work Difficulty Factor Adjustments	A-1
B	Unit Cost Factor Development	B-1
C	Unit Cost Factor Listing (Representative of Power Block Structures Only)	C-1
D	Humboldt Bay Power Plant Unit 3 2009 SAFSTOR Area-By-Area Estimate	D-1
E	Humboldt Bay Power Plant Unit 3 2009 SAFSTOR CPUC Cost Disallowances	E-1
F	Humboldt Bay 2009 SAFSTOR Decommissioning Schedule	F-1

REVISION LOG

Rev. No.	CRA No.	Date	Item Revised	Reason for Revision
0		10/11/05		Original Issue

EXECUTIVE SUMMARY

TLG Services, Inc (TLG) has prepared a site-specific cost study for decommissioning the Humboldt Bay Power Plant Unit 3 (HBPP3) for the Pacific Gas and Electric Company (PG&E), based on initiating dismantling activities in 2009, after all fuel has been placed in dry storage (2009 SAFSTOR). This estimate includes a comprehensive cost and schedule estimate for completing the decommissioning of HBPP3 based on outlined work areas of the plant. Manpower levels and activity durations were developed and are reflected within the project schedule along with other associated site programs. The projected cost to decommission HBPP3, including a 17.4% contingency, is estimated to be approximately $317.4 million (2004 dollars). The California Public Utility Commission (CPUC) has previously ruled that certain costs that were incurred after HBPP3 was permanently shutdown would not be included in rates for recovery of decommissioning costs. The portion of the above costs that have been identified by the CPUC as decommissioning disallowances is estimated at $357,287. The major cost contributors to the overall decommissioning cost are labor, spent fuel storage and the disposition of waste generated in the decontamination and demolition of the unit. The estimate is based on several key assumptions, including regulatory requirements, estimating methodology, contingency requirements, low-level radioactive waste disposal availability, high-level radioactive waste disposal options, and site restoration requirements. A complete discussion of the assumptions used in this estimate is presented in Section 3.

A detailed breakdown of these major cost contributors to the decommissioning cost estimate is reported in Section 6 of this document. Schedules of annual expenditures are provided in Section 3, and detailed cost, waste volume, and man-hour schedules are provided in Appendix D. Costs are reported in 2004 dollars. Cash flows and expenditures to date are based on schedule forecasts as of December 2004. The estimate includes the costs for storing the HBPP3 spent fuel until such time that the Department of Energy (DOE) can complete the transfer to an off-site facility.

Alternatives and Regulations

The Nuclear Regulatory Commission (NRC) provided general decommissioning guidance in the rule adopted on June 27, 1988.[1] In this rule the NRC sets forth technical and financial criteria for decommissioning licensed nuclear facilities. The regulation addresses planning needs, timing, funding methods, and environmental

1 U.S. Code of Federal Regulations, Title 10, Parts 30, 40, 50, 51, 70 and 72 "General Requirements for Decommissioning Nuclear Facilities," Nuclear Regulatory Commission, Federal Register Volume 53, Number 123 (p 24018+), June 27, 1988.

review requirements for decommissioning. The rule also defined three decommissioning alternatives as being acceptable to the NRC — DECON, SAFSTOR and ENTOMB.

> DECON was defined as "the alternative in which the equipment, structures, and portions of a facility and site containing radioactive contaminants are removed or decontaminated to a level that permits the property to be released for unrestricted use shortly after cessation of operations." [2]
>
> SAFSTOR was defined as "the alternative in which the nuclear facility is placed and maintained in a condition that allows the nuclear facility to be safely stored and subsequently decontaminated (deferred decontamination) to levels that permit release for unrestricted use." [3]
>
> ENTOMB was defined as "the alternative in which radioactive contaminants are encased in a structurally long-lived material, such as concrete; the entombed structure is appropriately maintained and continued surveillance is carried out until the radioactive material decays to a level permitting unrestricted release of the property." [4]

In 1996, the NRC published revisions to the general requirements for decommissioning nuclear power plants to clarify ambiguities and codify procedures and terminology as a means of enhancing efficiency and uniformity in the decommissioning process. The amendments allow for greater public participation and better define the transition process from operations to decommissioning. The costs and schedules presented in this estimate follow the general guidance and sequence in the amended regulations.

Methodology

The methodology used to develop the decommissioning cost estimates for HBPP3 follows the basic approach originally presented in the Guidelines.[5] This reference describes a unit factor method for determining decommissioning activity costs. The unit factors used in this analysis incorporates site-specific costs and the latest available information on worker productivity in decommissioning.

---

2 Ibid. Page FR24022, Column 3.
3 Ibid.
4 Ibid. Page FR24023, Column 2.
5 T.S. LaGuardia et al., "Guidelines for Producing Commercial Nuclear Power Plant Decommissioning Cost Estimates," AIF/NESP-036, May 1986.

An activity duration critical path is used to determine the total decommissioning program schedule. The schedule is relied upon in calculating the carrying costs, which include program management, administration, field engineering, equipment rental, and support services such as quality control and security. This systematic approach for assembling decommissioning estimates ensures a high degree of confidence in the reliability of the resulting cost estimate.

This study assumes that PG&E's primary contractor is already experienced in the techniques and technology of nuclear power plant decommissioning, and therefore performs all work (both field activities and project management) in an optimally efficient manner. Therefore, this study does not attempt to quantify any cost impact for any increase in efficiency from experience gained in decommissioning other plants in the past.

Contingency

Consistent with industry practice, contingencies are applied to the decontamination and dismantling costs developed as, "specific provision for unforeseeable elements of cost within the defined project scope, particularly important where previous experience relating estimates and actual costs has shown that unforeseeable events which will increase costs are likely to occur."[6] The cost elements in this estimate are based on ideal conditions; therefore, the types of unforeseeable events that are almost certain to occur in decommissioning, based on industry experience, are addressed through a percentage contingency applied on a line-item basis. This contingency factor is a nearly universal element in all large-scale construction and demolition projects. It should be noted that contingency, as used in this estimate, does not account for price escalation and inflation in the cost of decommissioning during the decommissioning period.

The use and role of contingency within decommissioning estimates is not a safety factor issue. Safety factors provide additional security and address situations that may never occur. Contingency funds, by contrast, are expected to be fully expended throughout the program. Application of contingency on a line-item basis is necessary to provide assurance that sufficient funding will be available to accomplish the intended tasks.

---

6 Project and Cost Engineers' Handbook, Second Edition, American Association of Cost Engineers, Marcel Dekker, Inc., New York, New York, p. 239.

Low-Level Radioactive Waste Disposal

The contaminated and activated material generated in the decontamination and dismantling of a commercial nuclear reactor is classified as low-level (radioactive) waste, although not all of the material is suitable for "shallow-land" disposal. With the passage of the "Low-Level Radioactive Waste Policy Act" in 1980,[7] and its Amendments of 1985,[8] the states became ultimately responsible for the disposition of low-level radioactive waste generated within their own borders. However, at this time a regional facility is not available. There are 3 types of low-level radioactive waste acceptable for near surface disposal, Class A, B, and C. All require controlled disposal in a licensed disposal facility. These classes distinguish the degree of disposal requirements with A having the least and C the greatest requirements. For the purposes of this estimate, Class A low-level radioactive waste generated in the decontamination and dismantling of HBPP3 is assumed to be shipped outside the Southwest Compact to the Envirocare facility, in Clive, Utah. Class B and C low-level radioactive waste is designated for disposal at the future Southwest Compact disposal site, or other nationally-available Class B/C low-level disposal site, neither of which currently exists. It is assumed for this estimate that one of these alternatives becomes available by 2009 to support decommissioning operations.

High-Level Waste

Congress passed the "Nuclear Waste Policy Act"[9] (NWPA) in 1982, assigning the responsibility for disposal of the spent nuclear fuel created by the commercial nuclear generating plants to the DOE. Two permanent disposal facilities were envisioned, as well as an interim storage facility. To recover the cost, the legislation created a Nuclear Waste Fund through which money is collected from the sale of electricity generated by the power plants. The NWPA, along with the individual disposal contracts with the utilities, specified that the DOE was to begin accepting spent fuel by January 31, 1998.

Since the original legislation, the DOE has announced several delays in the program schedule. By January 1998, the DOE had failed to initiate the disposal of spent nuclear fuel and high level waste, as required by the NWPA and the utility contracts. As a result, utilities have initiated legal action against the DOE. While legal actions continue, the DOE has no plans to receive spent fuel prior to completing the construction of its geologic repository.

---

7 "Low-Level Radioactive Waste Policy Act of 1980," Public Law 96-573, 1980.

8 "Low-Level Radioactive Waste Policy Amendments Act of 1985," Public Law 99-240, 1986.

9 "Nuclear Waste Policy Act of 1982 and Amendments," U.S. Department of Energy's Office of Civilian Radioactive Management, 1982.

Operation of DOE's yet-to-be constructed repository is contingent upon the review and approval of the facility's license application by the NRC, the successful resolution of pending litigation, and the development of a national transportation system. By comparison, the Private Fuel Storage consortium submitted an application for an interim storage facility in 1997. The Nuclear Regulatory Commission granted an operating license for the facility in September 2005, after eight years of review. With a more technically complex and politically sensitive application for permanent disposal, it is not unreasonable to expect that the NRC's approval to construct the repository at Yucca Mountain would require at least as long a review period. Construction would therefore begin sometime around the year 2010, at the earliest. The DOE has no plans for receiving spent fuel from commercial nuclear plant sites prior to this date and startup operations may be phased in, creating additional delays. The DOE's generator allocation/receipt schedules are based upon the oldest fuel receiving the highest priority. Given this scenario and an anticipated rate of transfer, spent fuel is projected to remain at the site until the year 2015.

The NRC requires that licensees establish a program to manage and provide funding for the caretaking of all irradiated fuel at the reactor site until title of the fuel is transferred to the DOE.[10] The fuel will be stored in the storage pool and/or an ISFSI located on the HBPP3 site until the DOE has completed the transfer. Consequently, costs are included within the estimates for the long-term caretaking of the spent fuel at the HBPP3 site.

Site Restoration

The efficient removal of the contaminated materials and verification that residual radionuclide concentrations are below the NRC guidelines will result in substantial damage to many of the site structures. Blasting, coring, drilling, scarification (surface removal), and the other decontamination activities will substantially damage power block structures, potentially weakening the footings and structural supports. Prompt demolition is clearly the most appropriate and cost-effective option.

All above-ground demolition debris is assumed to be transported and disposed of at a Low-Level Radiological Waste (LLRW) controlled disposal facility. Site structures not associated with Units 1 and 2 will be removed to a nominal depth of three feet below grade level. Below grade structures will be decontaminated and backfilled with clean fill. The site will then be graded and landscaped.

---

10 "Domestic Licensing of Production and Utilization Facilities," U.S. Code of Federal Regulations, Title 10, Part 50.54 (bb).

Summary

The costs to decommission HBPP3 were evaluated for a SAFSTOR decommissioning alternative. The estimates assume the eventual removal of all the contaminated and activated plant components and structural materials, such that the facility operator may then have unrestricted use of the site with no further requirement for an NRC license. Delayed decommissioning is initiated after the spent fuel has been removed from the site and is accomplished within the 60-year period required by current NRC regulations. In the interim, the spent fuel remains in storage at the site until such time that the transfer to a DOE facility can be completed. Once the transfer is complete, the storage facilities are also decommissioned.

The scenario analyzed for the purpose of generating the estimate is described in Section 2. The assumptions are presented in Section 3, along with schedules of annual expenditures. The major cost contributors are identified in Section 6, with detailed activity costs, waste volumes, and associated manpower requirements delineated in Appendices C, D, and E. Cost summaries for the various scenarios are provided at the end of this section for the major cost components.

SUMMARY OF DECOMMISSIONING COST CONTRIBUTORS

Work Category	Costs 04' $ (thousands)	Percent of Total
Decontamination	1,865	0.6%
Removal	23,899	7.5%
Packaging	3,087	1.0%
Shipping	5,578	1.8%
Waste Processing & Recycling	8,877	2.8%
LLW Burial	17,446	5.5%
Demolition LLW Burial	38,528	12.1%
Staffing	70,516	22.2%
Security	4,149	1.3%
License Termination Survey	9,874	3.1%
Insurance	786	0.2%
Energy	827	0.3%
NRC & EP Fees	1,935	0.6%
NRC ISFSI Fees	3,745	1.2%
ISFSI Capital, O&M, Fixed & Security	66,391	20.9%
Non-ISFSI Expenditures	20,282	6.4%
Equipment & Supplies	28,520	9.0%
Engineering	11,121	3.5%
Total	**317,424**	**100.0%**
CPUC Disallowances		
Removal	172	48.2%
Packaging	14	3.8%
Shipping	5	1.3%
Waste Processing & Recycling	30	8.3%
LLW Burial	135	37.8%
Equipment & Supplies	2	0.5%
Total	**357**	**100.0%**

1. INTRODUCTION

TLG prepared this decommissioning cost estimate to provide Pacific Gas and Electric Company (PG&E) with sufficient information to prepare the financial planning documents for decommissioning, as required by the Nuclear Regulatory Commission (NRC). It is not a detailed engineering document, but a financial analysis prepared in advance of the detailed engineering that will be required to carry out the decommissioning.

1.1 OBJECTIVE OF STUDY

The objective of the study is to prepare a comprehensive estimate of the cost, a schedule of the associated activities, and an estimate of the volume of radioactive waste generated during decommissioning of the Humboldt Bay Power Plant Unit 3 (HBPP3).

1.2 SITE DESCRIPTION

HBPP3 is located approximately four miles southwest of Eureka, California. The site consists of approximately 143 acres located on the mainland shore of Humboldt Bay. Figure 1.1 shows the layout of the site and the surrounding area. The adjacent generating units (Units 1 and 2) are fossil-fueled and are not considered in the scope of this study, except where noted.

The Nuclear Steam Supply System (NSSS) for HBPP3 consists of a single cycle, natural circulation, boiling water reactor and the associated control and support systems. Figure 1.2 shows a schematic diagram of the reactor pressure vessel and internal components. The generating unit had a rated core thermal power of 220 MWth (thermal) with a corresponding net electrical output of 65 MWe (electric).

The NSSS is located within the "primary containment structure." The primary containment is located mostly below grade and consists of a drywell vessel and a suppression chamber. Both the drywell and the suppression chamber area are located within a reinforced concrete caisson. The drywell vessel is centrally located in the caisson and serves as the primary containment vessel. The suppression chamber is constructed of reinforced concrete and lined with carbon steel plate. Six vent pipes connect the drywell to a common ring header at the top of the suppression chamber. Downcomers drop from the ring header and terminate below the normal water level of the suppression pool. As a

system, the drywell, suppression chamber, and interconnecting piping were designed to reduce the pressure increase in the event of a local process system piping failure. Figure 1.3, a sectional view through the caisson, depicts this general arrangement and the associated concrete structure.

The turbine-generator system converts heat produced in the reactor to electrical energy. This system converted the thermal energy of steam produced in the reactor vessel into mechanical shaft power and then into electrical energy. The unit's turbine-generator consists of a tandem, compound, double flow, condensing turbine directly connected to a 13,800V, 3-phase, 60 cycle, hydrogen-cooled, synchronous generator. The turbine consists of a single flow high-pressure section and a double flow, low-pressure section with a crossover pipe connecting the two sections. The turbine was operated in a closed feedwater cycle whereby steam was condensed and the condensate/feedwater was returned to the reactor vessel. Heat rejected in the main condenser was removed by the Circulating Water System (CWS). The CWS delivers the water required to remove the heat load from the main condenser and other auxiliary equipment and returns it to the bay through the discharge pipes and a canal.

Commercial operation began in August of 1963 and continued until July of 1976, at which time the unit was shut down after approximately 13 years of operation to conduct seismic modifications. In 1983 PG&E announced the decision to decommission Unit 3. The plant has been maintained in NRC SAFSTOR since that time. Active plant systems presently supporting the wet storage of the spent fuel will be retired once the fuel is transferred to an Independent Spent Fuel Storage Installation (ISFSI). This activity is scheduled to be completed in 2009.

1.3 REGULATORY GUIDANCE

The Nuclear Regulatory Commission (NRC or Commission) provided initial decommissioning requirements in its rule "General Requirements for Decommissioning Nuclear Facilities," issued in June 1988.[1]* This rule set forth financial criteria for decommissioning licensed nuclear power facilities. The regulation addressed decommissioning planning needs, timing, funding methods, and environmental review requirements. The intent of the rule was to ensure that decommissioning would be accomplished in a safe and timely manner and that adequate funds would be available for this purpose. Subsequent to the rule, the NRC issued Regulatory Guide 1.159, "Assuring the Availability of Funds for Decommissioning Nuclear Reactors,"[2] which

* Annotated references for citations in Sections 1-6 are provided in Section 7.

provided additional guidance to the licensees of nuclear facilities on the financial methods acceptable to the NRC staff for complying with the requirements of the rule. The regulatory guide addressed the funding requirements and provided guidance on the content and form of the financial assurance mechanisms indicated in the rule.

The rule defined three decommissioning alternatives as being acceptable to the NRC: DECON, SAFSTOR, and ENTOMB. The DECON alternative assumes that any contaminated or activated portion of the plant's systems, structures, and facilities are removed or decontaminated to levels that permit the site to be released for unrestricted use shortly after the cessation of plant operations. The rule also placed limits on the time allowed to complete the decommissioning process. For SAFSTOR, the process is restricted in overall duration to 60 years, unless it can be shown that a longer duration is necessary to protect public health and safety. The guidelines for ENTOMB are similar, providing the NRC with both sufficient leverage and flexibility to ensure that these deferred options are only used in situations where it is reasonable and consistent with the definition of decommissioning. At the conclusion of a 60-year dormancy period (or longer for ENTOMB if the NRC approves such a case), the site would still require significant remediation to meet the unrestricted release limits for license termination.

The ENTOMB alternative has not been viewed as a viable option for power reactors due to the significant time required to isolate the long-lived radionuclides for decay to permissible levels. However, with recent rulemaking permitting the controlled release of a site, the NRC has re-evaluated this alternative.[3] The resulting feasibility study, based upon an assessment by Pacific Northwest National Laboratory, concluded that the method did have conditional merit for some, if not most, reactors. However, the staff also found that additional rulemaking would be needed before this option could be treated as a generic alternative. The NRC had considered rulemaking to alter the 60-year time for completing decommissioning and to clarify the use of engineered barriers for reactor entombments.[4] However, the NRC staff has recommended that rulemaking be deferred, based upon several factors, e.g., no licensee has committed to pursuing the entombment option, the unresolved issues associated with the disposition of greater-than-Class C material (GTCC), and the NRC's current priorities, at least until after the additional research studies are complete. The Commission concurred with the staff's recommendation.

The NRC published revisions to the general requirements for decommissioning nuclear power plants in 1996.[5] When the regulations were originally adopted in 1988, it was assumed that the majority of licensees would decommission at the end of the facility's operating licensed life. Since that time, several licensees permanently and prematurely ceased operations. Exemptions from certain operating requirements were required once the reactor was defueled to facilitate the decommissioning. Each case was handled individually, without clearly defined generic requirements. The NRC amended the decommissioning regulations in 1996 to clarify ambiguities and codify procedures and terminology as a means of enhancing efficiency and uniformity in the decommissioning process. The new amendments allow for greater public participation and better define the transition process from operations to decommissioning.

Under the revised regulations, licensees will submit written certification to the NRC within 30 days after the decision to cease operations. Certification will also be required once the fuel is permanently removed from the reactor vessel. Submittal of these notices will entitle the licensee to a fee reduction and eliminate the obligation to follow certain requirements needed only during operation of the reactor. Within two years of submitting notice of permanent cessation of operations, the licensee is required to submit a Post-Shutdown Decommissioning Activities Report (PSDAR) to the NRC. The PSDAR describes the planned decommissioning activities, the associated sequence and schedule, and an estimate of expected costs. Prior to completing decommissioning, the licensee is required to submit an application to the NRC to terminate the license, which will include a License Termination Plan (LTP).

1.3.1 Nuclear Waste Policy Act

Congress passed the Nuclear Waste Policy Act[6] (NWPA) in 1982, assigning the responsibility for disposal of the spent nuclear fuel created by the commercial nuclear generating plants to the U.S. Department of Energy (DOE). Two permanent disposal facilities and an interim storage facility were envisioned. To recover the cost, the legislation created a Nuclear Waste Fund through which money is collected from the sale of electricity generated by the power plants. The NWPA, along with the individual disposal contracts with the utilities, specified that the DOE was to begin accepting spent fuel by January 31, 1998.

After pursuing a national site selection process, the NWPA was amended in 1987 to designate Yucca Mountain, Nevada, as the only site to be evaluated for geologic disposal of high-level waste. Also in 1987, the DOE announced a five-year delay (1998 to 2003) in the opening date for the repository. Two years later, in 1989, an additional seven-year delay was announced, primarily due to problems in obtaining the permits necessary from the state of Nevada to perform the required characterization of the site.

Generators have responded to this impasse by initiating legal action against the DOE and constructing supplemental storage as a means of maintaining necessary fuel storage operating margins. In an August 2000 ruling,[7] the U.S. Court of Appeals for the Federal Circuit reaffirmed the utility position that DOE had breached its contractual obligation. The DOE continues to maintain that its delayed performance is unavoidable because it does not have an operational repository and does not have authority to provide storage in the interim. Consequently the DOE has no plans to receive spent fuel from the commercial reactors until the repository is operational.

The NRC requires that licensees establish a program to manage and provide funding for the management of all irradiated fuel at the reactor until title of the fuel is transferred to the Secretary of Energy, pursuant to Title 10 of the Code of Federal Regulations (10 CFR), §50.54 (bb).[8] This funding requirement is fulfilled through inclusion of certain high-level waste cost elements in the decommissioning estimates, as identified in Section 3.

PG&E expects to construct an independent spent fuel storage installation (ISFSI) on the HBPP3 site to support decommissioning. It is expected that this facility will be available to support decommissioning operations. The ISFSI is designed to accommodate the inventory of spent fuel residing in the plant's storage pool. Once emptied, the refueling building can be either decontaminated and dismantled or prepared for long-term storage.

For estimating purposes, the DOE is assumed to pick up spent fuel from HBPP3 in the year 2015. The DOE's generator allocation/receipt schedules are based upon the oldest fuel receiving the highest priority.

1.3.2 Low-Level Radioactive Waste Policy Amendments Act

The contaminated and activated material generated in the decontamination and dismantling of a commercial nuclear reactor is classified as low-level (radioactive) waste, although not all of the material is suitable for "shallow-land" disposal. Congress passed the "Low-Level Radioactive Waste Policy Act" in 1980,[9] declaring the states as being ultimately responsible for the disposition of low-level radioactive waste generated within their own borders. The federal law encouraged the formation of regional groups or compacts to implement this objective safely, efficiently, and economically, and set a target date of 1986 for implementation. After little progress, the "Low-Level Radioactive Waste Policy Amendments Act of 1985,"[10] extended the implementation schedule, with specific milestones and stiff sanctions for non-compliance. However, to date, no new compact facilities have been successfully sited, licensed, and constructed.

With the passage of the "Low-Level Radioactive Waste Disposal Act" in 1980, and its Amendments of 1985, the states became ultimately responsible for the disposition of low-level radioactive waste generated within their own boarders. However, at this time, a regional facility is not available. There are 3 types of low-level radioactive waste acceptable for near surface disposal, Class A, B, and C. All require controlled disposal in a licensed disposal facility. These classes distinguish the degree of disposal requirements with A having the least and C the greatest requirements. For the purposes of this estimate, Class A low-level radioactive waste generated in the decontamination and dismantling of HBPP3, is assumed to be shipped outside the Southwest Compact to the Envirocare Facility, in Clive, Utah. Class B and C low-level radioactive waste is designated for disposal at the future Southwest Compact disposal site or at another nationally available Class B/C low-level disposal site. While neither of these alternatives currently exists, it is assumed for this estimate that one becomes available by 2009 to support decommissioning operations.

1.3.3 Radiological Criteria for License Termination

In 1997, the NRC published Subpart E, "Radiological Criteria for License Termination,"[11] amending 10 CFR §20. This subpart provides radiological criteria for releasing a facility for unrestricted use. The regulation states that the site can be released for unrestricted use if radioactivity levels are such that the average member of a critical group would not receive a Total Effective Dose Equivalent (TEDE) in excess of 25 millirem per year, and provided that residual radioactivity has been reduced to levels that are As Low As Reasonably Achievable (ALARA). The decommissioning estimates for HBPP3 assume that the site will be remediated to a residual level consistent with the NRC-prescribed level.

It should be noted that the NRC and the Environmental Protection Agency (EPA) differ on the amount of residual radioactivity considered acceptable in site remediation. The EPA has two limits that apply to radioactive materials. An EPA limit of 15 millirem per year is derived from criteria established by the Comprehensive Environmental Response, Compensation, and Liability Act (CERCLA or Superfund).[12] An additional limit of 4 millirem per year, as defined in 40 CFR §141.16, is applied to drinking water.[13]

On October 9, 2002, the NRC signed an agreement with the EPA on the radiological decommissioning and decontamination of NRC-licensed sites. The Memorandum of Understanding (MOU) [14] provides that EPA will defer exercise of authority under CERCLA for the majority of facilities decommissioned under NRC authority. The MOU also includes provisions for NRC and EPA consultation for certain sites when, at the time of license termination, (1) groundwater contamination exceeds EPA-permitted levels; (2) NRC contemplates restricted release of the site; and/or (3) residual radioactive soil concentrations exceed levels defined in the MOU.

The MOU does not impose any new requirements on NRC licensees and should reduce the involvement of the EPA with NRC licensees who are decommissioning. Most sites are expected to meet the NRC criteria for unrestricted use, and the NRC believes that only a few sites will have groundwater or soil contamination in excess of the levels specified in the MOU that trigger consultation with the EPA. However, if there are other hazardous materials on the site, the EPA may be involved in

the cleanup. As such, the possibility of dual regulation remains for certain licensees. The present study does not include any costs for this occurrence.

Congress has prohibited the EPA from spending funds to enforce cleanup requirements at sites under the jurisdiction of the NRC. However, the mandate is not legally binding and the possibility exists that a site, once released from its NRC license, could be subject to EPA regulation. Furthermore one state has established decommissioning site release limits that are below both the EPA and NRC limits.

FIGURE 1.1

LAYOUT OF THE NUCLEAR PLANT SITE AND SURROUNDING AREA

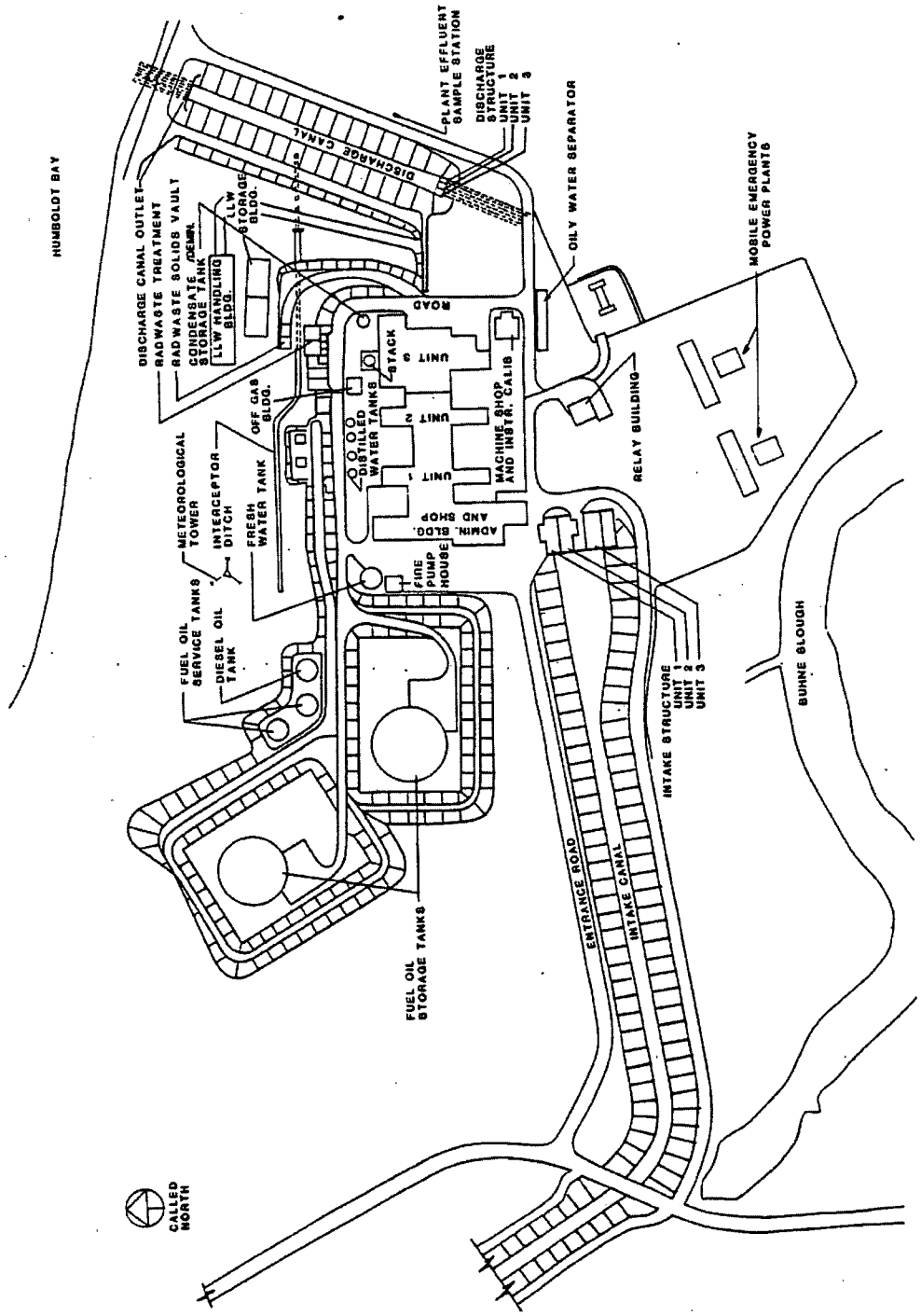

FIGURE 1.2

SCHEMATIC DIAGRAM OF THE VESSEL AND INTERNALS

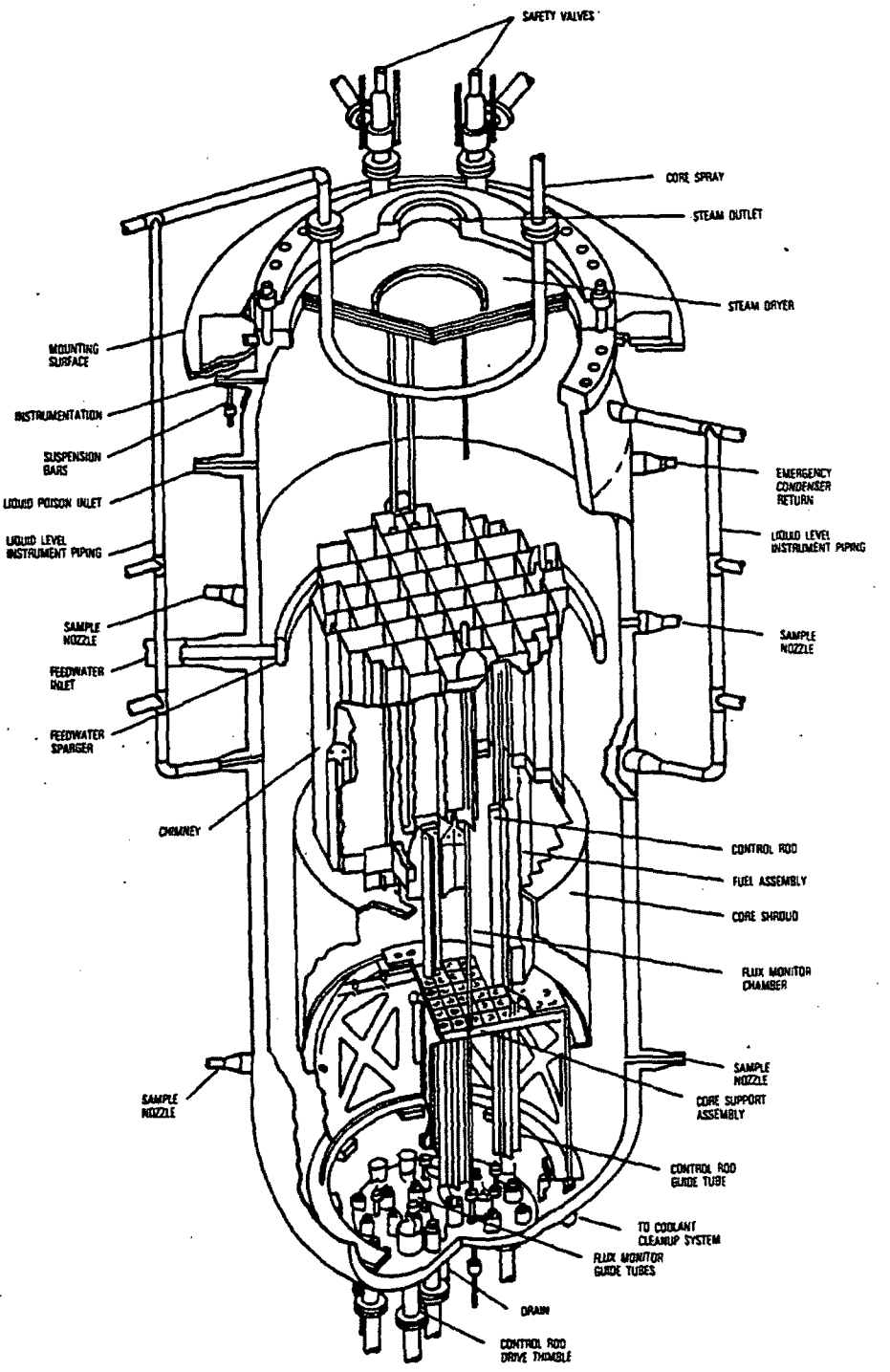

FIGURE 1.3

SECTIONAL VIEW THROUGH THE CAISSON

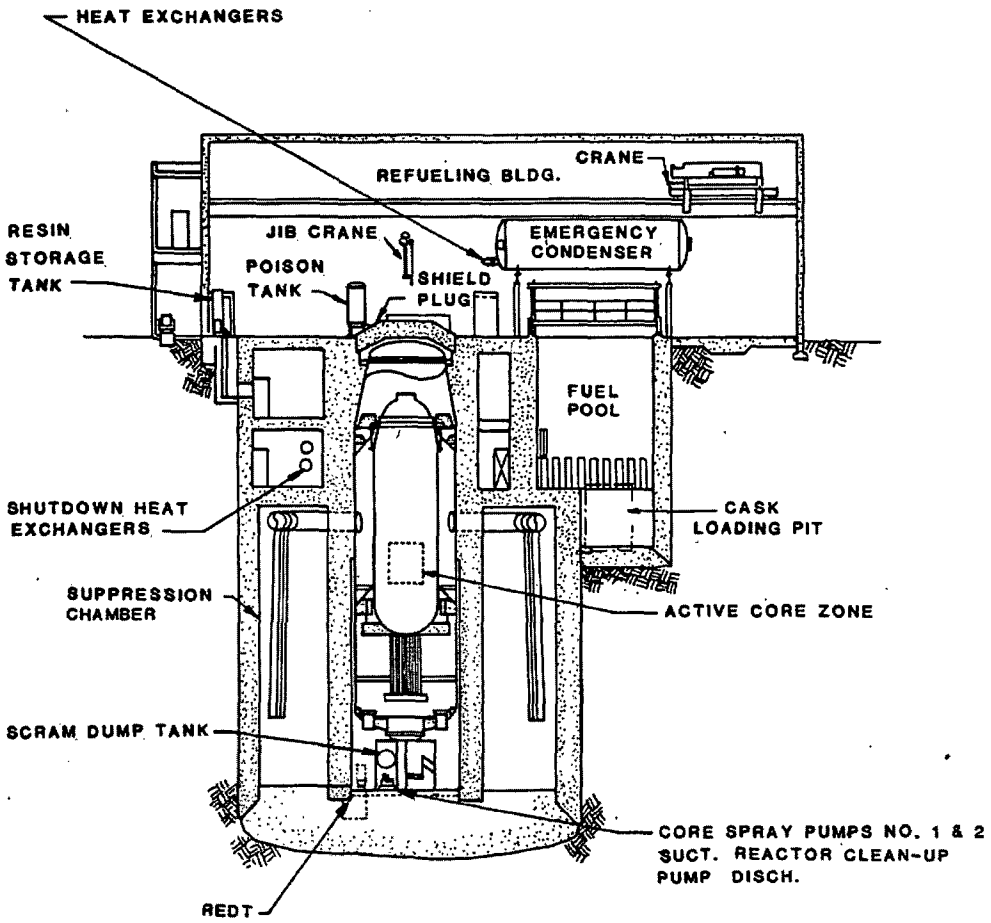

2. SAFSTOR DECOMMISSIONING ACTIVITIES

This section describes the activities associated with the decontamination and disassembly of the plant. Although detailed procedures for each activity identified are not provided, and the actual sequence of work may vary, the activity descriptions provide a basis not only for estimating, but also for understanding the expected scope of work, i.e., engineering and planning at the time of decommissioning.

The operation, shut down, and safe storage of the nuclear unit were described in detail in the decommissioning plan, "SAFSTOR Decommissioning Plan for the Humboldt Bay Power Plant, Unit No. 3" [15]. The activities and associated costs expended prior to 1996, and routine operations and maintenance costs for dormancy, are not included in the estimate. This study understanding specifically addresses those activities and costs associated with the conclusion of the safe storage period and the subsequent decommissioning process.

The NRC defines SAFSTOR as "the alternative in which the nuclear facility is placed and maintained in a condition that allows the nuclear facility to be safely stored and subsequently decontaminated (deferred decontamination) to a level that permits release for unrestricted use." The decommissioning scenario evaluated in this study presumes that decommissioning activities will officially start in 2007.

The SAFSTOR decommissioning plan prepared by PG&E primarily addressed the activities and tasks related to preparing and maintaining the facility in safe storage. The document was originally intended to be revised (updated) prior to initiating decommissioning activities in the year 2007. Under the current NRC decommissioning requirements, the SAFSTOR Decommissioning Plan was considered to be both a Preliminary Shutdown Decommissioning Activities Report (PSDAR) and a Defueled Safety Analysis Report (DSAR). As a result, PG&E submitted a PSDAR in February 1998 that describes planned decommissioning activities and associated schedule and cost [16]. The SAFSTOR Decommissioning Plan was renamed the DSAR, and it contains system descriptions, administrative controls, and accident analysis. PG&E will submit a License Termination Plan at least two years prior to license termination.

The current NRC guidance (Reg. Guide 1.184 Decommissioning of Nuclear Power Reactors) defines decommissioning in three phases. The current plant status (safe storage) is addressed in Phase II. This phase is applicable to the dormancy phase of the deferred decommissioning alternatives. Phase III pertains to the activities involved in license termination.

The TLG cost estimating methodology subdivides the decommissioning project into periods, based upon major milestones in the project. Continuing Phase II expenses, denoted as Period 2 in this study, are not addressed in detail. Phase III, addressing the activities associated with license termination, is subdivided into Periods 3 and 4 in the cost estimate. Period 5 addresses those activities required for site restoration. Post-Period 5 covers ISFSI operations, fuel transfer to the DOE, and ISFSI demolition.

2.1 PERIOD 2 – SAFE STORAGE AND DECOMMISSIONING PREPARATIONS

Current site activities include: preventive and corrective maintenance on essential systems, general building maintenance, operation and maintenance of heating and ventilation equipment, routine radiological inspections of contaminated structures, maintenance of structural integrity, and monitoring of environmental and radiation conditions.

Since the two adjoining fossil units are operational and site resources can be shared, the staff dedicated to Unit 3 is minimal. Consequently, to support decommissioning operations, PG&E will have to secure additional resources, both internally from the corporate organization and through external contractors.

Pre-decommissioning, Period 2 activities, are included in this study, one of which is the licensing and design of the ISFSI. The licensing and construction of this facility will allow the spent fuel currently stored in the plant's wet storage spent fuel pool to be relocated to a passive, dry storage system so that decommissioning of the components within the Refueling Building can proceed without restrictions caused by the storage of spent fuel in the storage pool.

The following additional preparatory activities are scheduled during Period 2 prior to start of the formal decommissioning: abatement of asbestos, performance of a vessel and internals activation analysis, performance of a radiological characterization survey of work areas, major components, and structures (including the drywell), sampling of internal piping and primary shield cores, development of cost and work control program, development of detailed work plans and schedules, development of a radioactive waste processing and disposal plan, and the development of the engineering decommissioning licensing basis.

2.2 PERIOD 3 - PREPARATIONS

In anticipation of decommissioning, preparations are undertaken to provide a smooth transition from safe storage. The organization required to plan and manage the intended decommissioning activities is assumed to be assembled from available utility staff and outside resources, as required. For purposes of this study, a decommissioning operations contractor (DOC) is utilized to manage the decommissioning and to manage and perform the physical decommissioning activities and associated management functions. A radwaste contractor will be employed to manage the processing and disposal of decommissioning waste, including the recycling of equipment, components, and material and the disposal of all decommissioning waste, including concrete and steel structural debris, contaminated soil, and associated hazardous and mixed waste.

2.2.1 Engineering and Planning

Significant technical and engineering planning and evaluation must be performed in preparation for physical decommissioning activities. Technical requirements documents are prepared for systems, components, and structures during each phase of the decommissioning. These engineering requirements are then transferred into specific documents for the preparation of material and services contracts and for the preparation of detailed work plans and work authorization documents. Also, regulations require the preparation of a license termination plan. The plan is required at least two years prior to the anticipated date of license termination. The plan includes a site characterization, description of the remaining dismantling activities, plans for site remediation, procedures for the final radiation survey, designation of any reuse of the site, an updated cost estimate to complete the decommissioning, and resolution of environmental concerns. The NRC will make the plan available for public comment. Plan approval will be subject to conditions and limitations as deemed appropriate by the NRC. Much of the information needed in preparing this submittal will have been used to develop the detailed engineering plans and procedures needed to support Period 4 activities.

Other engineering and planning work activities performed during Period 3 include: evaluating alternatives for the removal of highly radioactive reactor vessel components, identifying specialty contractors, selecting the methodology and requirements for systems and structures

decontamination, preparing procedures for radioactive material disposal, and designing and procuring specialty tooling.

2.2.2 Site Preparations

In preparation for the actual decommissioning, the following physical tasks are performed and included in the cost estimate:

- The design and licensing of the ISFSI facility
- Constructing and modifying site support and storage facilities, as required.
- Processing and disposal of residual liquid, solid, and mixed waste inventories.
- Procuring waste containers, including specialty containers for the disposition of highly activated and hazardous materials. The types of containers needed to support decommissioning operations include strong-tight steel boxes and drums, shielded transport casks, dry fuel storage liners, high integrity containers, intermodal containers, and shipping transportation trailers.
- Developing procedures for occupational exposure control, control and release of liquid and gaseous effluent, processing of radwaste including dry active waste (DAW), resins, filter media, metallic and non-metallic components generated in decommissioning, site security and emergency programs, hazardous waste identification and processing, and industrial safety.

2.3 PERIOD 4 - DECOMMISSIONING OPERATIONS AND LICENSE TERMINATION

The decommissioning cost estimate has divided this period into sub-periods to assist in the development of cost elements and to better understand the work sequence and the overall duration of the work phase. The spent fuel storage location and storage methodology during Period 4, significantly affects how costs are estimated. Therefore, costs for system removal are split into costs for system removal before and after spent fuel transfer to the ISFSI. System and structure operational requirements with the fuel in the pool control the overall sequence and approach to the HBPP3 decommissioning.

2.3.1 System Removal – Wet Fuel

This phase includes: construction of temporary facilities and shielding, modification of existing storage facilities to support the dismantling activities, decontamination of selected systems and components, procurement of specialty tooling, and modifications to systems and structures to support fuel transfer and handling of the waste from reactor vessel and spent fuel pool removal.

The following is a general chronological list of the system and component removal activities performed during this period.

- Removal of major turbine components, e.g. generator, turbine and condenser.
- Removal of components and systems in the Turbine Building, including piping, pumps, heat exchangers and associated mechanical and electrical components.
- Removal of electrical control boards, distribution buses, and transformers.
- Removal of Hot Machine Shop equipment and piping.

2.3.2 Fuel Transfer

The following is a general chronological list of the system and component removal activities performed during this period:

- Transfer of spent fuel to ISFSI
- Removal of spent fuel racks and fuel pool cleanup

2.3.3 System Removal – Dry Fuel (ISFSI)

The following is a general chronological list of the system and component removal activities performed during this period:

- Removal of the reactor vessel closure head. The head may be a candidate for decontamination; however, for estimating purposes it is assumed to be disposed of as low-level radioactive waste.

Segmentation of the head may be desirable to increase packaging efficiency and minimize its disposal volume.

- Removal and segmenting of the steam dryer, core spray piping, feedwater sparger and chimney, as required, for transport. Component segmentation may be performed in the reactor vessel; however, relocation to the spent fuel pool would allow greater control with respect to water clarity and provide greater flexibility in packaging, i.e., homogenization of the waste forms. Material meeting 10 CFR 61 Class C criteria or less may be routed for off-site disposal at a commercial shallow-land waste disposal facility.

- Disassembly/segmentation of remaining reactor internals, including the core shroud, core support assembly, control rod guide tube and other miscellaneous components. These operations will probably be confined to the reactor vessel due to the higher activation levels of the components.

- Segmentation/sectioning of the reactor vessel, placing segments into shielded containers. The operation is performed remotely, in-air, using a shielded work platform and a contamination control envelope. Sections are placed in liners and stored in the spent fuel pool. The liners are loaded into shielded transport casks for disposal at a commercial shallow-land waste disposal facility.

- Removal of control rod drive housings from reactor vessel bottom head and packaging for controlled disposal. The bottom head may be highly contaminated from the swarf generated from in-vessel segmentation activities. It may be advantageous to relocate the head to the spent fuel pool for additional processing and preparation for disposal. This will also significantly lower the working radiation levels within the drywell and allow disassembly work to proceed.

- Removal of systems and associated components as they become non-essential to the vessel removal operation, related decommissioning activities, or worker health and safety (e.g., waste collection and processing systems, electrical and ventilation systems, etc.).

- Removal of steel drywell liner and the steel vent pipes connecting the drywell to the suppression chamber. Contaminated surfaces can be designated for decontamination while activated portions are packaged for direct disposal. This activity would also include the

removal of activated concrete from behind the drywell steel and the concrete floor slab at the bottom of caisson, and packaging the material for direct disposal.

- Decontamination and removal of the suppression chamber steel, disposition waste as appropriate.
- Removal of contaminated equipment and material from the Radwaste Treatment and Refueling Buildings. Decontaminate the structures, e.g., scarifying concrete surfaces until residual levels of contamination are acceptable for unrestricted release.
- Decontamination of remaining contaminated site buildings and facilities. Package and dispose of all remaining low-level radioactive waste, and any remaining hazardous and toxic materials.
- Removal of remaining components, equipment, and plant services in support of the area release survey(s).
- Removal of contaminated soil and contaminated drain and catch basins. Remediation of the intake and discharge canals.

Components removed in the decontamination and dismantling of HBPP3 will be routed to an on-site central processing area. Material that has been preliminarily screened to be free of contamination will be shipped to an offsite processing facility where final release surveys will be conducted. Contaminated material will be characterized and segregated for off-site processing (disassembly, chemical cleaning, volume reduction, waste treatment, etc.) and/or packaged for controlled disposal at the designated low-level radioactive waste disposal facility.

2.3.4 Building Demolition

Buildings in the Restricted Area (RA) will be decontaminated as necessary to allow conventional demolition. Structures will be removed down to three feet below grade.

Building demolition debris and waste soil will be shipped using intermodal containers via truck and then rail to Envirocare.

2.3.5 Final Site Survey – License Termination

At least two years prior to the anticipated date of license termination, an LTP is required. Submitted as a supplement to the Final Safety Analysis Report (FSAR) or its equivalent, the plan must include: a site characterization, description of the remaining dismantling activities, plans for site remediation, procedures for the final radiation survey, designation of the end use of the site, an updated cost estimate to complete the decommissioning, and any associated environmental concerns. The NRC will notice the receipt of the plan, make the plan available for public comment, and schedule a local hearing. LTP approval will be subject to any conditions and limitations as deemed appropriate by the Commission.

Incorporated into the LTP is the Final Survey Plan. This plan identifies the radiological surveys to be performed once the decontamination activities are completed and is developed using the guidance provided in the "Multi-Agency Radiation Survey and Site Investigation Manual (MARSSIM)."[17] This document incorporates the statistical approaches to survey design and data interpretation used by the EPA. It also identifies state-of-the-art, commercially available instrumentation and procedures for conducting radiological surveys. Use of this guidance ensures that the surveys are conducted in a manner that provides a high degree of confidence that applicable NRC criteria are satisfied. Once the survey is complete, the results are provided to the NRC in a format that can be verified. The NRC then reviews and evaluates the information, performs an independent confirmation of radiological site conditions, and makes a determination on final termination of the license.

The NRC will terminate the operating license if it determines that site remediation has been performed in accordance with the LTP, and that the terminal radiation survey and associated documentation demonstrate that the facility is suitable for release.

2.4 PERIOD 5 - SITE RESTORATION

Excavated areas will be backfilled to grade using clean fill. A small volume of clean asphalt paving will be available and used as fill. Site areas affected by the dismantling activities are cleaned and the plant area graded as required to prevent ponding and inhibit the refloating of subsurface materials.

2.5 POST-PERIOD 5 - ISFSI OPERATIONS AND DEMOLITION

The ISFSI will operate under a separate and independent license (10 CFR §72) following the termination of the §50 operating license. The ISFSI will continue to operate until all spent fuel and greater than Class C (GTCC) material has been transferred to the DOE. This study assumes that the DOE will be able to complete the transfer of spent fuel from HBPP3 by the year 2015.

At the conclusion of the transfer process, the ISFSI will be decommissioned. The storage modules are not assumed to be activated from the storage of fuel, due to the age of the fuel when placed and the relatively short residence time. Consequently, this estimate does not include the cost of any significant decontamination of the ISFSI facility. Confirmation of the radiological status will be obtained through surveys and sampling of the modules.

The Commission will terminate the ISFSI 10 CFR 72 license when it determines that site remediation has been performed in accordance with a license termination plan and the terminal radiation survey and associated documentation demonstrate that the structure is suitable for release. Once the requirements are satisfied, the NRC can terminate the license for the ISFSI.

The assumed design for the ISFSI is based upon the use of a multi-purpose canister installed in a steel-lined below grade engineered concrete vault. For purposes of this cost analysis, it is assumed that once the inner canisters containing the spent fuel assemblies have been removed, required decontamination performed, and the license for the facility terminated, the concrete vault can be dismantled using conventional techniques for the demolition of reinforced concrete. After removal of the concrete vault and loading ramps the area will be graded and landscaped to conform to the surrounding environment.

3. COST ESTIMATE

A site-specific cost estimate was prepared for decommissioning HBPP3. The estimate accounts for the unique features of the site, including the nuclear boiler, electric power generating systems, structures, and supporting facilities. The basis of the estimate and the sources of information, methodology, site-specific considerations, assumptions, and total costs are described in this section.

3.1 BASIS OF ESTIMATE

The estimate was developed using work areas as the incremental unit. As part of the 1997 cost estimate, each accessible area was visually inspected and a physical inventory of each area was documented. Specific consideration included material accessibility and egress, radiological conditions, and physical limitations for staging work crews.

Drawings and other documentation were used to plan and schedule activities in high radiation areas and areas currently inaccessible due to the plant's configuration. The unit factors used in developing equipment and component removal costs were adjusted for the working conditions determined for each area. Adaptation of the unit factors was accomplished by the manipulation of the duration adjustment variables or "Work Difficulty Factors" (WDF's).

The waste stream is assumed to be transferred to an on-site radioactive waste processor for recycling and disposal. Class A low-level radioactive waste generated in the decontamination and dismantling of HBPP3 is assumed to be buried at the Envirocare facility in Clive, Utah. Class B and C low-level radioactive waste is assumed to be buried at the Southwest Compact's future disposal facility or nationally available equivalent.

Spent fuel is assumed to be relocated to an on-site ISFSI. This allows for decontamination and dismantling activities to proceed on the refueling building without the current constraint to maintain active spent fuel storage pool systems and services, as well as to eliminate any safety issues associated with dismantling activities in the vicinity of the pool.

HBPP3 above grade structures will be demolished using standard methods and all demolition debris will be shipped off site to Envirocare. Below grade structures will be decontaminated and left in place.

As the licensee, PG&E will oversee the decommissioning operations. The plant staff will be augmented with the resources necessary to ensure a safe and efficient operation. This organization will supervise the decontamination and dismantling of the nuclear unit. Oversight will continue in a reduced capacity during site restoration and beyond, as dictated by the management of the spent fuel.

3.2 METHODOLOGY

The methodology used to develop the estimates follows the basic approach originally presented in the AIF/NESP-036 study report, "Guidelines for Producing Commercial Nuclear Power Plant Decommissioning Cost Estimates,"[18] and the DOE "Decommissioning Handbook."[19] These documents present a unit factor method for estimating decommissioning activity costs, which simplifies the estimating calculations. Unit factors for concrete removal ($/cubic yard), steel removal ($/ton), and cutting costs ($/inch) were developed using local labor rates. The activity-dependent costs were estimated with the item quantities (cubic yards and tons), developed from plant drawings and inventory documents. Removal rates and material costs for the conventional disposition of components and structures relied upon information available in the industry publication, "Building Construction Cost Data," published by R.S. Means.[20]

This analysis reflects lessons learned from TLG's involvement in the Shippingport Station Decommissioning Project, completed in 1989, as well as the decommissioning of the Cintichem reactor, hot cells, and associated facilities, completed in 1997. In addition, the planning and engineering for the Pathfinder, Shoreham, Rancho Seco, Trojan, Yankee Rowe, Big Rock Point, Maine Yankee, Humboldt Bay-3, Oyster Creek, Connecticut Yankee, and San Onofre-1 nuclear units have provided additional insight into the process, the regulatory aspects, and the technical challenges of decommissioning commercial nuclear units.

The unit factor method provides a demonstrable basis for establishing reliable cost estimates. The detail available in the unit cost factors for activity time, labor (by craft), and equipment and consumable costs provide assurance that cost elements has not been omitted. These detailed unit cost factors, coupled with the plant-specific inventory of piping, components, and structures provide a high degree of confidence in the reliability of the cost estimates.

Work Difficulty Factors

WDF were assigned to each area, commensurate with the inefficiencies associated with working in confined hazardous environments. The ranges used for the WDFs are as follows:

Access Factor	0% - 30%
Respirator Protection Factor	0% - 50%
Radiation/ALARA Factor	0% - 100%
Protective Clothing Factor	0% - 100%
Work Break Factor	8.33%
Alpha Adjustment Factor	0% - 350%

These factors and their associated range of values were developed in conjunction with the Atomic Industrial Forum's guideline. The factors (and their suggested application) are discussed in more detail in that publication. The WDF assigned to each work area is delineated in Appendix A.

Scheduling Program Durations

The unit factors, adjusted by the WDFs as described above, are applied against the inventory of materials to be removed in the radiologically controlled areas. The resulting man-hours, or crew-hours, are used in the development of the decommissioning program schedule, using resource loading and event sequencing considerations. The scheduling of conventional removal and dismantling activities are based upon productivity information available from the "Building Construction Cost Data" publication.

An activity duration critical path is used to determine the total decommissioning program schedule. The schedule is relied upon in calculating the carrying costs, which include program management, administration, field engineering, equipment rental, and support services such as quality control and security. This systematic approach for assembling decommissioning estimates ensures a high degree of confidence in the reliability of the resulting cost estimate.

3.3 FINANCIAL COMPONENTS OF THE COST MODEL

TLG's proprietary decommissioning cost model, DECCER, produces a number of distinct cost elements. These direct expenditures, however, do not comprise

the total cost to accomplish the project goal, i.e., license termination and site restoration.

Inherent in any cost estimate that does not rely on historical data is the inability to specify the precise source of costs imposed by factors such as tool breakage, accidents, illnesses, weather delays, and labor stoppages. In the DECCER cost model, contingency fulfills this role. Contingency is added to each line item to account for costs that are difficult or impossible to develop analytically. Such costs are historically inevitable over the duration of a job of this magnitude; therefore, this cost analysis includes funds to cover these types of expenses.

3.3.1 Contingency

The activity- and period-dependent costs are combined to develop the total decommissioning cost. A contingency is then applied on a line-item basis, using one or more of the contingency types listed in the AIF/NESP-036 study. "Contingencies" are defined in the American Association of Cost Engineers "Project and Cost Engineers' Handbook[21] as "specific provision for unforeseeable elements of cost within the defined project scope; particularly important where previous experience relating estimates and actual costs has shown that unforeseeable events which will increase costs are likely to occur." The cost elements in this analysis are based upon ideal conditions and maximum efficiency; therefore, consistent with industry practice, a contingency factor has been applied. In the AIF/NESP-036 study, the types of unforeseeable events that are likely to occur in decommissioning are discussed and guidelines are provided for percentage contingency in each category. It should be noted that contingency, as used in this analysis, does not account for price escalation and inflation in the cost of decommissioning over the remaining operating life of the station.

The use and role of contingency within decommissioning estimates is not a "safety factor issue." Safety factors provide additional security and address situations that may never occur. Contingency funds are expected to be fully expended throughout the program. They also provide assurance that sufficient funding is available to accomplish the intended tasks. An estimate without contingency, or from which contingency has been removed, can disrupt the orderly progression of

events and jeopardize a successful conclusion to the decommissioning process.

For example, the most technologically challenging task in decommissioning a commercial nuclear station is the disposition of the reactor vessel and internal components, now highly radioactive after a lifetime of exposure to core activity. The disposition of these components forms the basis of the critical path (schedule) for decommissioning operations. Cost and schedule are interdependent, and any deviation in schedule has a significant impact on cost for performing a specific activity.

Disposition of the reactor vessel internals involves the underwater cutting of complex components that are highly radioactive. Costs are based upon optimum segmentation, handling, and packaging scenarios. The schedule is primarily dependent upon the turnaround time for the heavily shielded shipping casks, including preparation, loading, and decontamination of the containers for transport. The number of casks required is a function of the pieces generated in the segmentation activity, a value calculated on optimum performance of the tooling employed in cutting the various subassemblies. The expected optimization, however, may not be achieved, resulting in delays and additional program costs. For this reason, contingency must be included to mitigate the consequences of the expected inefficiencies inherent in this complex activity, along with related concerns associated with the operation of highly specialized tooling, field conditions, and water clarity.

Contingency funds are an integral part of the total cost to complete the decommissioning process. Exclusion of this component puts at risk a successful completion of the intended tasks and, potentially, subsequent related activities. For this study, TLG examined the major activity-related problems (decontamination, segmentation, equipment handling, packaging, transport, and waste disposal) that necessitate a contingency. Individual activity contingencies ranged from 10% to 75%, depending on the degree of difficulty judged to be appropriate from TLG's actual decommissioning experience. The contingency values used in this study are as follows:

Decontamination	50%
Contaminated Component Removal	25%

Contaminated Component Packaging	10%
Contaminated Component Transport	15%
Low-Level Radioactive Waste Disposal	25%
Reactor Segmentation	75%
NSSS Component Removal	25%
Reactor Waste Packaging	25%
Reactor Waste Transport	25%
Reactor Vessel Component Disposal	50%
GTCC Disposal	15%
Non-Radioactive Component Removal	15%
Heavy Equipment and Tooling	15%
Supplies	25%
Engineering	15%
Energy	15%
Characterization and Termination Surveys	30%
Construction	15%
Taxes and Fees	10%
Insurance	10%
Staffing	15%
ISFSI-related expenditures*	20%

* for activities not under contract

The contingency values are applied to the appropriate components of the estimate on a line item basis. A composite value is then reported at the end of the estimate. The composite contingency value reported for this estimate is 17.4%.

3.3.2 Financial Risk

In addition to the routine uncertainties addressed by contingency, another cost element that is sometimes necessary to consider when bounding decommissioning costs relates to uncertainty, or risk. Examples can include changes in work scope, pricing, job performance, and other variations that could conceivably, but not necessarily, occur. Consideration is sometimes necessary to generate a level of confidence in the estimate, within a range of probabilities. TLG considers these

types of costs under the broad term "financial risk." Included within the category of financial risk are:

- Transition activities and costs: ancillary expenses associated with changing the composition of the site labor force after the cessation of dormancy operations, added cost for worker separation packages throughout the decommissioning program, national or company-mandated retraining, and retention incentives for key personnel.

- Delays in approval of the decommissioning plan due to intervention, public participation in local community meetings, legal challenges, and national and local hearings.

- Changes in the project work scope from the baseline estimate, involving the discovery of unexpected levels of contaminants, contamination in places not previously expected, contaminated soil previously undiscovered (either radioactive or hazardous material contamination), variations in plant inventory or configuration not indicated by the as-built drawings.

- Regulatory changes, e.g., affecting worker health and safety, site release criteria, waste transportation, and disposal.

- Policy decisions altering national commitments, e.g., in the ability to accommodate certain waste forms for disposition, or in the timetable for such, e.g., the start and rate of acceptance of spent fuel by the DOE.

- Pricing changes for basic inputs, such as labor, energy, materials, and burial. Some of these inputs may vary slightly, e.g. -10% to +20%; burial could vary from -50% to +200% or more.

It has been TLG's experience that the results of a risk analysis, when compared with the base case estimate for decommissioning, indicate that the chances of the base decommissioning estimate's being too high is a low probability, and the chances that the estimate is too low is a higher probability. This is mostly due to the pricing uncertainty for low-level radioactive waste burial, and to a lesser extent due to schedule increases from changes in plant conditions and to pricing variations in the cost of labor (both craft and staff). This cost study, however, does not add any additional cost to the estimate for financial

risk, since there is insufficient historical data from which to project future liabilities. Consequently, the areas of uncertainty or risk are revisited periodically and addressed through repeated revisions or updates of the base estimate.

3.4 SITE SPECIFIC CONSIDERATIONS

3.4.1 Spent Fuel Disposition

The estimate assumes that the ISFSI will commence operation in 2009. The proposed ISFSI transfer date will allow the facility decommissioning to proceed without constraints for spent fuel caretaking activities. The facility will have sufficient capacity to handle the inventory of 390 spent fuel assemblies currently in the spent fuel storage pool. The ISFSI design is for a multi-purpose (storage and transport) dry canister within a vertical multi-purpose steel cask. The ISFSI is also designed and sized to handle one container of greater than Class C (GTCC) waste that will be generated during the reactor vessel dismantling. The ISFSI will operate until 2015, the current projected date for the DOE to remove all spent fuel from the facility. Any delays in the transfer date to the DOE will increase the overall operations and maintenance cost.

The ISFSI cost estimate includes the cost for the ISFSI canisters, the concrete storage facility, the road to the storage facility, and all engineering, construction, licensing, and cask handling. The ISFSI operational and maintenance costs include inspections and security.

3.4.2 Reactor Vessel and Internal Components

The reactor vessel and internal components will be segmented in place and transported for disposal in shielded transportation casks. Segmentation of the less activated components is performed in the spent fuel storage pool to the extent practical. The highly activated components can be disassembled in the vessel as long as water clarity is maintained. The vessel is segmented in place, using a mast-mounted cutter.

The dismantling of the reactor internals will generate radioactive waste considered unsuitable for shallow land disposal, i.e., GTCC. Although the material is not classified as high-level waste, the DOE

has indicated it will accept this waste for disposal at the future high-level waste repository.[22] However, the DOE has not been forthcoming with an acceptance criteria or disposition schedule for this material, and numerous questions remain as to the ultimate disposal cost and waste form requirements. As such, for purposes of this study, the GTCC has been packaged and disposed of as high-level waste, at a cost equivalent to that envisioned for the spent fuel. It is not anticipated that the DOE would accept this waste prior to completing the transfer of spent fuel. Therefore, until such time the DOE is ready to accept GTCC waste, it is reasonable to assume that this material would remain in storage at the HBPP3 site.

Main steam and feedwater piping is cut from the reactor vessel once the water level in the vessel (used for personnel shielding during dismantling and cutting operations in and around the vessel) is dropped below the nozzles.

The estimate further assumes that the fuel failures that occurred released fission products at sufficiently low levels that the buildup of quantities of long-lived isotopes has been prevented from reaching levels exceeding those which permit the major NSSS components to be shipped under current DOT regulations and to be buried within the requirements of 10 CFR 61.

The cost to remove and dispose of 48 control rod blades is included in the estimate.

3.4.3 Main Turbine and Condenser

The main turbine is dismantled using conventional maintenance procedures. The generator, turbine rotors, and shafts are removed to a laydown area. The lower turbine casing is removed from its anchors by controlled demolition. The main condenser is also disassembled and moved to a laydown area. Each component is surveyed and designated for either decontamination, volume reduction, and conventional or controlled disposal.

The removal cost of the condenser and the turbine have been increased in the WDF by an index of 1.5 to account for the presence of alpha contamination.

3.4.4 Plant Systems

Due to the high levels of alpha contamination, mechanical cutting is the primary method of removing mechanical and electrical components. This method will minimize the potential of alpha particle contamination and the remediation requirements associated with lead -based paint on the exterior piping surfaces.

The WDF and the unit cost factors associated with system removal activities in areas with known alpha contamination have been adjusted and increased by an index factor of 1.5 to provide an additional allowance for the increased difficulty of performing work activities in areas containing alpha contamination.

3.4.5 Humboldt Bay Unit 3 Facilities

Typically surface contamination can be removed by scarification where the contamination is removed with the spalled or abraded concrete surface. This technique is most effective on smooth, unbroken surfaces. Over time, the concrete at Humboldt Bay has experienced cracking from the high seismic activity in the area providing pathways for contamination transport. In addition, the concrete surfaces were originally uncoated and were subject to additional contamination deposits due to failed fuel in early cycles. As such, the contamination has likely migrated to depths greater than effectively removed by surface scarification techniques. This condition was observed during the plant stack removal project where the vendor had difficulty in meeting the free-release criteria for the stack material, even after extensive surface decontamination. As a result of this expected plant condition and for the purposes of this estimate, structural material removed as part of the decommissioning project was assumed to be disposed of at a LLRW disposal facility. Although this same condition is expected to exist in below grade structures, due to the high water table and resulting cost to remove below grade structures, these structures will be decontaminated and surveyed in place. Decontaminating below-grade structures to free-release is expected to be more cost-effective than complete removal.

Significant alpha contamination exists within primary systems and as fixed contamination in the Refueling, Radwaste, and Turbine buildings. The extent of the alpha contamination will require

additional radiological controls and will reduce the efficiency of component removal activities. These controls will include: additional resources to perform surveys and establish contamination controls, additional time to obtain, dry, and prepare for counting alpha samples, additional respiratory protection requirements and controls, additional time for the set up of localized control of the contamination and additional nonproductive time for personnel involved in removal activities due to the alpha contamination. Therefore, the WDF for building decontamination activities in specified work areas has been increased by an index factor of 1.05 to 1.15 to account for these limitations.

The caisson surrounding the reactor vessel and constituting the containment structure will remain in place. The caisson will not be able to be removed while the adjacent fossil-fueled units are still operational.

The additional resources and work activities during the decommissioning will necessitate additional facilities. This estimate provides for the following new facilities: radiation protection counting facility, craft entry facility, locker and sanitary facilities for project personnel, a radwaste packaging and container loading facility, temporary office facilities, and a temporary control room facility. An allowance has also been provided in the Period 3 costs for modification and upgrade of the Refueling Building crane. These upgrades are required prior to the start of decommissioning work in the building.

The HBPP site is physically small and members of the public can access within 100 feet of the current restricted area. As such, the Radwaste Process Facility will be situated close to the center of the site to reduce potential radiation exposure to the public.

The existing Solid Radwaste Storage Building located on the north side of Unit 3 will be converted into a combination radiation protection counting facility, radiation protection office area, and a new craft entry point. Modifications to this facility include counting room shielding, interior office space and furniture, radiation laboratory monitoring and measuring equipment, and installation of exit portal radiation monitors. The perimeter fence and in-plant security barriers will be moved as appropriate to conform to the Site Security Plan in force at the various stages of the project.

Before demolition of the turbine building can begin, the existing control room must be de-energized and an alternative control room will be erected to monitor radiation effluent and other permitted discharges. In addition the current count room facility must be moved prior to movement of the turbine generator.

A radwaste shipping and handling facility will be provided to support the radwaste removal and recycling contractor. A radioactive waste packaging area will be created in the lower level of the Turbine Building. This facility will rely on the existing mechanical, electrical, and other equipment that is currently available in the area. Also, a waste shipment loading area will be constructed. This facility will be a metal-sided building, (approximately 50 feet by 60 foot) with access for large moving and lifting equipment to support waste shipping operations.

Craft and technical office trailers and support facilities are provided for in the estimate, as is the installation of a sanitary pump lift station to support the additional project staff.

All buildings scheduled for demolition will be removed to a nominal depth of three feet below grade, with the decontaminated or non-contaminated sub grade foundations remaining in place. Holes will be drilled in each of the foundation basemats to allow for natural drainage. Building foundations will be backfilled with clean backfill (and a nominal volume of clean asphalt), and the site will be graded and landscaped. All areas affected by dismantling activities will be cleaned up, covered with loam, and seeded.

A cost has been included for the survey of structures after decontamination and prior to the demolition and disposal of the debris. Partial decontamination and survey of the structure will allow demolition of the structure without the additional requirements imposed due to radioactive material monitoring and control.

Yard drainage piping including contaminated soils surrounding the drain system will be excavated and removed. The existing circulating water discharge piping will be abandoned in place.

The discharge canals and portions of the intake canal will be remediated. Contaminated material will be excavated and disposed of as low-level radioactive waste.

3.4.6 Transportation Methods

Class A waste (including waste from the reactor vessel segmentation) will be shipped by truck to the Envirocare burial site. Class B and C low-level radioactive waste produced and destined for controlled disposal will be moved overland by truck or shielded van to the primary burial site (Southwest Compact site or nationally available equivalent) assumed to be approximately 1,000 miles away. Building demolition debris and waste soil will be shipped using intermodal containers via truck and then rail to Envirocare.

Recycling waste will be transported by the waste contractor to its recycling center. The cost of transportation of recycled waste is included in the bulk recycling rate of $2 per pound.

Portions of the reactor vessel and internal components will be transported in accordance with 10 CFR 71, as Type B and C waste. It is conceivable that the reactor, due to its limited specific activity, could qualify as Low Specific Activity (LSA) II or III. However, the high radiation levels on the outer surface would require that additional shielding be incorporated with the packaging to attenuate the dose to levels acceptable for transport under 49 CFR 173.[23] Contaminated piping, components, and structural steel other than the reactor vessel and internals, will qualify as LSA – I, II, or III or SCO-I, or II, as described in 49 CFR Part 173. The contaminated material will be packaged in Industrial Packages (IP I, II, or III) for transport unless demonstrated to qualify as their own shipping containers.

Shielded truck casks will be used to transport highly activated metal produced in the segmentation of the reactor vessel and internal components. Cask shipments may exceed 95,000 pounds due to the weight of the vessel segments(s), supplementary shielding, cask tie-downs and the tractor-trailer. The maximum curies per shipment assumed permissible is based upon the license limits of available shielded shipping casks. The number and curie content of vessel segments are selected to meet these limits. The number of cask

shipments out of the Refueling Building is expected to average one per week. Non-cask shipments will be limited to five per week.

An allowance has been provided in the estimate for the purchase of fifteen special trailer beds. State law restricts the size of the trucks on local roads. Since shortened truck beds are not readily available for rental, PG&E has decided to purchase the equipment.

Transportation costs are estimated using published tariffs from Tri-State Motor Transit.[24]

3.4.7 Coordination with Units 1 and 2

This estimate includes the removal of the entire site drainage network. A portion of the excavated soil will require remediation and will be disposed of as radioactive waste. The essential portions of the yard drainage system that supports Units 1 or 2 will be replaced.

Wherever shared process systems exist, between the fossil units and Unit 3, the Unit 3 systems will be isolated from the remaining operational portions. Non-nuclear portions of these systems that contain residual contamination will be remediated and decontaminated as part of the dismantling of the operating unit unless the respective system is removed or replaced sooner.

In accordance with NRC requirements, and based upon known radioactive contamination, limited exterior radiological surveys of Units 1 and 2 will be conducted as part of the Final Site Survey. The surveys will be coordinated with any planned outages or maintenance for either unit.

3.4.8 Site Conditions Following Decommissioning

It is assumed that the Unit 3 structures and site facilities will be dismantled following their decontamination. Structures would be removed to a nominal depth of 3 feet below grade. The voids would be backfilled with clean debris and capped with soil. The site would then be graded to conform to the adjacent landscape. Vegetation would be established to inhibit erosion.

The canals would remain for use by the operating units; however, non-essential structures could be removed. The switchyard will remain in place, as well as the site access road.

3.5 ASSUMPTIONS

The following additional factors and conditions were used in developing the decommissioning cost estimate for HBPP3. Radwaste estimating assumptions are contained in Section 5.

3.5.1 Estimating Basis

The estimate is performed in accordance with the methodology described in the AIF/NESP-036 study. Decommissioning costs are reported in the year of projected expenditures; however, the values are reported in 2004 dollars for the current estimate. Costs are not inflated or escalated over the period of performance.

Plant drawings, equipment, and structural specifications, including construction details, were provided by PG&E. TLG personnel prepared the inventory of plant equipment.

3.5.2 Labor Costs

Although PG&E will oversee the decommissioning operations, this study assumes that PG&E hires a decommissioning operations contractor (DOC) to handle planning, engineering, procurement, field supervision, and labor. A separate waste disposal contractor will also be contracted to provide bulk one-stop recycling and disposal of decommissioning waste.

Utility staffing requirements will vary with the level of effort associated with the various phases of the project. Once the decommissioning program starts, only those staff positions necessary to support the decommissioning program are included. There are no costs reflected within the estimate for the transition of the maintenance organization to decommissioning, e.g., separation packages, re-training, severance, incentives, etc.

The craft labor required to decontaminate and dismantle the nuclear unit will be acquired through standard contracting practices. The

current cost of labor from Diablo Canyon was adjusted for regional differences and used in the estimate. Costs for site administration, operations, construction and maintenance personnel are based upon current PG&E salary information. Engineering services for such items as writing activity specifications, detailed procedures, and work procedures are assumed to be provided by the DOC.

The WDF and unit cost factors for component removal and for selective building structural decontamination have been adjusted to account for the affects of alpha contamination. Mechanical cutting using saws and portable pipe cutters is the primary method of component removal used in the estimate.

3.5.3 General

The existing plant equipment inventory is obsolete and only suitable for scrap as deadweight quantities. No equipment is salvageable. Scrap generated during decommissioning is not recognized as having any value because (1) scrap value generally offsets scrap removal and processing costs and (2) scrap materials have a relatively low market value. Scrap processing and site removal costs are not included in the estimate.

Clean asbestos will be disposed in an approved landfill. Contaminated asbestos will be buried as radioactive waste.

PG&E will provide the electrical power for decommissioning. Current Humboldt Bay electricity rates are used.

PG&E will remove all items of furniture, tools, mobile equipment such as forklifts, trucks, bulldozers, other similar mobile equipment, and other such items of personal property owned by PG&E that will be easily removed without the use of special equipment at no cost or credit to the project.

Existing warehouses will remain for use by PG&E and its subcontractors.

The study follows the principles of ALARA through the use of work duration adjustment factors. These factors adjust the time and cost for performing tasks after consideration of factors such as use of protective

clothing and respirators and the effect of indoctrination and mock-up training. These items lengthen a task's duration, which increase the costs and lengthen the overall schedule. ALARA planning is considered in the costs for engineering and planning, and in the development of activity specifications and detailed procedures.

Nuclear liability insurance provides coverage for off-site damage or injuries due to radiation exposure from equipment and material. Nuclear property insurance provides protection against direct physical damage to on-site property by a broad range of causes including, radioactive contamination, fires, floods, etc. This estimate includes the premium cost for both liability and property insurance. The premiums are adjusted to reflect the relative changes in risk during the various phases of decommissioning. Insurance is required until both the Part 50 and Part 72 licenses are terminated.

The perimeter fence and in-plant security barriers will be moved as appropriate to conform with the Security Plan in force at the various stages in the project. A new craft entry point will be installed to support Unit 3 decommissioning without interfering with the remaining operating generating units. A new radiological protection counting room and storage facility will also be constructed to support the decommissioning. Additional survey equipment will be purchased to support the large radiological protection program and the Final Status Survey (FSS) effort.

The existing electrical switchyard will remain after decommissioning in support of the remaining site generating units and the utility's electrical transmission and distribution system.

Underground concrete pipe will be decontaminated and abandoned. Underground steel pipe will be removed, surveyed for contamination, removed from the site, and disposed of as clean scrap. Electrical manholes will be backfilled with suitable earthen material and abandoned.

The caisson encapsulating the reactor vessel compartment will be decontaminated and abandoned in place. Excavation and removal of the caisson is not practical without affecting the operation of the adjacent generating units.

No groundwater remediation is assumed to be required, although a series of groundwater monitoring wells will be installed to sample groundwater for ^{90}Sr and other mobile radionuclides. A nominal amount of mixed waste will be disposed of and 22,000 cubic feet of contaminated soil will require removal and disposal.

The remediation of the discharge canal is expected to require the installation of a cofferdam. This will allow remediation of the canal without affecting the operating units. Trap rock and sediment will be mechanically removed; trap rock will be washed to remove loose radioactive material. Contaminated rock and sediment will be packaged and buried. Recycled rock and new material will be replaced to return the canal to its original condition.

3.6 COST ESTIMATE SUMMARY

A summary of the decommissioning costs and annual expenditures is provided in the cash flow summary in Table 3.1a. Table 3.1b is a similar table of annual expenditures but omits those costs disallowed by the California Public Utility Commission (CPUC). Table 6.1 provides a breakdown of those same decommissioning costs into the components of decontamination, removal, packaging, etc. The costs were extracted from the detailed reports in Appendices D & E, which provide a detailed listing of activities and associated costs for the decommissioning scenario.

TABLE 3.1a

SCHEDULE OF EXPENDITURES
(thousands, 2004 dollars)[1]

Year	PG&E Labor	Equipment & Materials	Contractor Labor	Process & Burial	Other	Yearly Totals
1996-2004	0	0	0	0	28,652	28,652
2005	0	0	0	0	3,498	3,498
2006	0	0	0	0	3,121	3,121
2007	4,303	1,593	15,051	340	13,936	35,223
2008	12,182	10,342	15,910	6,535	11,393	56,362
2009	11,787	7,432	11,996	8,314	4,263	43,791
2010	11,553	4,640	9,658	6,622	2,079	34,552
2011	8,876	4,804	8,849	38,006	5,197	65,732
2012	4,097	2,760	15,178	4,671	1,622	28,327
2013	0	239	3,321	0	1,885	5,445
2014	0	239	3,321	0	1,885	5,445
2015	322	703	3,088	546	2,617	7,277
	53,120	32,752	86,373	65,034	80,147	317,424

1 Columns may not add due to rounding

TABLE 3.1b

SCHEDULE OF EXPENDITURES, EXCLUDING CPUC DISALLOWANCES (thousands, 2004 dollars)[1]

Year	PG&E Labor	Equipment & Materials	Contractor Labor	Process & Burial	Other	Yearly Totals
1996-2004	0	0	0	0	28,652	28,652
2005	0	0	0	0	3,498	3,498
2006	0	0	0	0	3,121	3,121
2007	4,303	1,593	15,051	340	13,936	35,223
2008	12,182	10,342	15,910	6,535	11,393	56,362
2009	11,787	7,425	11,967	8,258	4,261	43,698
2010	11,553	4,631	9,620	6,548	2,077	34,430
2011	8,876	4,781	8,776	37,970	5,196	65,600
2012	4,097	2,758	15,171	4,671	1,622	28,317
2013	0	239	3,321	0	1,885	5,445
2014	0	239	3,321	0	1,885	5,445
2015	322	703	3,088	546	2,617	7,277
	53,120	32,711	86,226	64,869	80,142	317,067

1 Columns may not add due to rounding

4. SCHEDULE ESTIMATE

The schedule for the decommissioning scenario considered in this study follows the sequence presented in the AIF/NESP-036 study, with minor changes to reflect recent experience and site-specific constraints. In addition, the scheduling has been revised to reflect the spent fuel management plan outlined for HBPP3.

Appendix F presents a schedule for the 2009 SAFSTOR decommissioning alternative and the supporting assumptions. The key activities listed in the schedule do not reflect a one-to-one correspondence with those activities in the Appendix D cost table, but reflect dividing some activities for clarity and combining others for convenience. The schedule was prepared using the "Microsoft Project for Windows" computer software. [25]

4.1 SCHEDULE ESTIMATE ASSUMPTIONS

The schedule estimate reflects the results of a precedence network developed for the site decommissioning activities, i.e., a PERT (Program Evaluation and Review Technique) software package. The schedule forecast is current as of December 2004. The following assumptions were made in the development of the decommissioning schedule:

- Spent fuel will be transferred to the ISFSI by 2009. Final decommissioning activities will not begin before that time.
- All work (except vessel and internals removal) is performed during an 8-hour workday, 5 days per week, with no overtime.
- Vessel and internals removal activities are performed by using separate crews for different activities working on different shifts, with a corresponding backshift charge for the second shift.
- Multiple crews work parallel activities to the maximum extent possible, consistent with: optimum efficiency; adequate access for cutting, removal and laydown space; and the stringent safety measures necessary during demolition of heavy components and structures.
- For removal of plant systems by area, the areas with the longest removal durations on the critical path are considered to determine the duration.

4.2 PROJECT SCHEDULE

The period-dependent costs presented in the cost table in Appendix D are based upon the durations developed in the decommissioning project schedule. Durations are established between several milestones in each project period; these durations are used to establish a critical path for the entire project. In turn, the critical path duration for each period is used as the basis for determining the total costs for these period-dependent items.

A project timeline for the decommissioning alternative is included in this section as Figure 4.1.

FIGURE 4.1

DECOMMISSIONING TIMELINE
(not to scale)

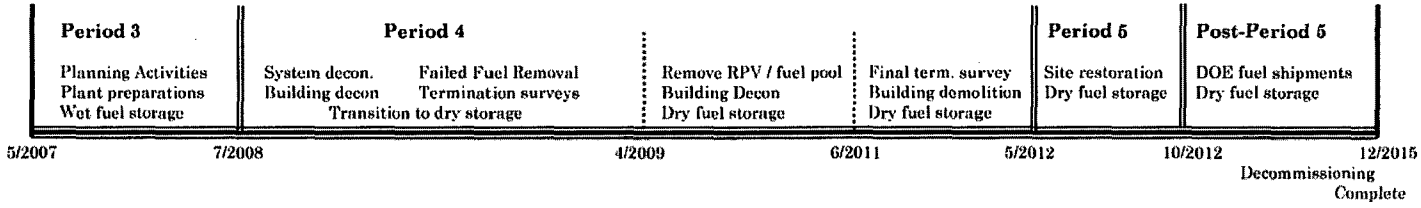

Key Assumptions:

1. Decommissioning commences on May of 2007.
2. Initiation of selected decommissioning planning and regulatory activities occurs prior to plant shutdown.
3. Use of a Decommissioning Operations Contractor (DOC) in later Period 3 planning activities.
4. USDOE acceptance of spent fuel shipments is initiated in year 2015 and continues at the design rate of spent fuel acceptance for the final repository location.
5. GTCC wastes are removed from the plant site with the spent fuel.

Critical Path Discussion:

Following removal of all spent fuel to long term dry storage, the decommissioning critical path is assumed to be sequentially composed of removing the reactor vessel and spent fuel pool, decontamination of buildings, performing final site termination surveys, site restoration, and final spent fuel acceptance and removal by the USDOE.

5. RADIOACTIVE WASTE

The objectives of the decommissioning process are the removal of all radioactive material from the site that would restrict its future use and the termination of the NRC license(s). This currently requires the remediation of all radioactive material at the site in excess of applicable legal limits. Under the Atomic Energy Act,[26] the NRC is responsible for protecting the public from sources of ionizing radiation. Title 10 of the Code of Federal Regulations delineates the production, utilization, and disposal of radioactive materials and processes. In particular, §71 defines radioactive material and §61 specifies its disposition.

5.1 GENERAL

A waste contractor is expected to be hired to manage the handling, shipping, recycling and processing of radwaste. Due to the physical site layout limitations, and consistent with current decommissioning trends, the majority of material removed from the site will be treated as low-level or potential low-level waste.

A facility will be constructed to support the efficient handling of radioactive waste. Structural demolition debris will be loaded onto intermodal containers and shipped by truck to a railhead in Redding, CA for rail shipment to Envirocare. The estimate assumes that PG&E will purchase fifteen shipping trailers that are sized to meet the overland road shipping limitations of local highways. The cost of the facility and the trailers are included in the estimate.

A summary of the HBPP3 waste volumes is provided in Table 5.1.

5.2 CLASS A WASTE AND RECYCLING

All metallic radioactive waste will be shipped by the waste contractor to its recycling center. The estimate assumes that the average PG&E all-inclusive cost for recycling metallic waste is $2.00 per pound. This cost includes processing, shipping, and burial of contaminated waste. An additional $1.00 per pound recycling surcharge has been applied to specific components that have elevated alpha contamination. The components that include the alpha contamination surcharge in their disposal cost include radwaste tanks, main condenser, and primary system components.

Class A dry active waste (DAW) will be processed and buried by the radioactive waste vendor at a delivered cost of $140 per cubic foot. This waste will be shipped by truck to Envirocare. Class A mixed waste, including lead used for shielding and solvents will also be shipped to a waste processor for disposition.

All structural debris, including concrete, metal siding, and structural steel will be buried at a cost of $140 per cubic foot. This waste will be loaded onto trucks, transported to Redding, CA, and rail-shipped to Envirocare. The material will be loaded on intermodal containers prior to shipment. Intermodals utilized for trucking and subsequent rail shipment can be loaded to a 67,200 pound capacity. This is the preferred shipping alternative due to the local road limitations and the lack of accessible rail access. Contaminated soil will be disposed of similar to structural debris.

5.3 CLASS B WASTE

Class B waste will be transferred to the on-site waste contractor and shipped using a shielded truck to the Southwest Compact burial site or equivalent. The cost-basis for Class B waste disposal is the Barnwell fee schedule for Non-Atlantic compact generators. Class B waste includes spent resin waste from system decontamination and portions of the vessel shell and cladding in the core beltline region.

5.4 CLASS C WASTE

Class C waste will be transferred to the on-site waste contractor and shipped using a shielded truck to the Southwest Burial Compact site or equivalent. The cost-basis for Class C waste disposal is the Barnwell fee schedule for Non-Atlantic compact generators. Class C waste includes control rod blades and portions of the reactor vessel internals.

5.5 GREATER THAN CLASS C WASTE

One additional canister and overpack will be purchased for the transport and dry storage of the GTCC waste. The waste will be stored consistent with the spent fuel and the DOE will assume ownership and disposal responsibility for the material at a cost similar to the equivalent cost for disposal of spent fuel. GTCC waste includes those portions of the reactor vessel internals containing radioactivity levels in excess of Class C limits.

TABLE 5.1

DECOMMISSIONING WASTE DISPOSAL SUMMARY

	Waste Volume[3] (cubic feet)
Low-Level Radioactive Waste[1]	
Class A[2]	74,128
Class B	3,027
Class C	423
GTCC	17
Subtotal	**77,595**
Miscellaneous Wastes	
Demolition Debris	239,303

Notes:
1. Radioactive waste is classified according to the requirements as delineated in Title 10 of the Code of Federal Regulations, Part 61.55.
2. Class A waste includes soil, discharge canal sediment and reactor caisson mixed waste.
3. Column may not add due to rounding.

6. RESULTS

The analysis to estimate the costs to decommission HBPP3 relied upon the site-specific, technical information developed for previous analyses prepared in 1997 and 2001. While not an engineering study, the analysis provides PG&E with sufficient information to assess its financial obligations, as they pertain to the eventual decommissioning of the nuclear station.

The estimates described in this report are based on numerous fundamental assumptions, including regulatory requirements, project contingencies, low-level radioactive waste disposal practices, high-level radioactive waste management options, and site restoration requirements. The decommissioning scenarios assume that spent fuel is transferred to dry storage prior to initiating dismantling activities. The ISFSI will be used to store the spent fuel until such time that the DOE can complete the transfer of the assemblies to its repository.

The cost projected to decommission (SAFSTOR 2009) HBPP3 is $317,424,436 (including 17.4% contingency) in 2004 dollars. This total includes $357,287 (20.0% contingency) that has been classified as CPUC's disallowances. The majority of this cost (approximately 75%) is associated with the physical decontamination and dismantling of the nuclear units so that the licenses can be terminated. Another 23.2% is associated with the management, interim storage, and eventual transfer of the spent fuel. The remaining 1.8% is for the demolition of the designated structures and limited restoration of the site.

The primary cost contributors, identified in Table 6.1 are either labor-related or associated with the management and disposition of the radioactive waste. Program management (staffing) is the largest single contributor to the overall cost. The magnitude of the expense is a function of both the size of the organization required to manage the decommissioning, as well as the duration of the program. It is assumed, for purposes of this analysis, that PG&E will oversee the decommissioning program, using a DOC to manage the decommissioning labor force and the associated subcontractors. The size and composition of the management organization varies with the decommissioning phase and associated site activities. However, once the operating licenses are terminated, the staff is substantially reduced for the conventional demolition and restoration of the site, and the long-term care of the spent fuel.

As described in this report, spent fuel will be packaged into transportable steel canisters for loading into a DOE-provided transport cask. The canisters will be

stored in concrete overpacks at the ISFSI until the DOE is able to receive them. Dry storage of the fuel under a separate license provides additional flexibility in the event the DOE is not able to meet the current timetable for completing the transfer of assemblies to an off-site facility and minimizes the associated caretaking expenses.

The cost for waste disposal includes only those costs associated with the controlled disposition of the low-level radioactive waste generated from decontamination and dismantling activities, including plant equipment and components, structural material, filters, resins and dry-active waste. As described in Section 5, disposal of the radioactive material, including concrete and structural steel, as well as the highly radioactive material, is sent to either Envirocare (Class A waste) or the Southwest Compact's future disposal facility or nationally available equivalent (Class B and C waste). Highly activated reactor vessel components (GTCC), requiring additional isolation from the environment, are packaged for geologic disposal. The cost of geologic disposal is based upon a cost equivalent for spent fuel.

A significant portion of the metallic waste is designated for additional processing and treatment at an off-site facility. Processing reduces the volume of material requiring controlled disposal through such techniques and processes as survey and sorting, decontamination, and volume reduction. The material that cannot be unconditionally released is packaged for controlled disposal at one of the currently operating facilities. The cost identified in the summary table for processing is all-inclusive, incorporating the ultimate disposition of the material.

Removal costs reflect the labor-intensive nature of the decommissioning process, as well as the management controls required to ensure a safe and successful program. Decontamination and packaging costs also have a large labor component that is based upon prevailing wages.

The reported cost for transport includes the tariffs and surcharges associated with moving large components and/or overweight shielded casks overland, as well as the general expense, e.g., labor and fuel, of transporting material to the destinations identified in this report. For purposes of this analysis, material is primarily moved overland by truck, although for bulk materials, including soils and concrete, rail transport is also used.

Decontamination is used to reduce the plant's radiation fields and minimize worker exposure. Slightly contaminated material or material located within a contaminated area is sent to an off-site processing center, i.e., this analysis does not assume that contaminated plant components and equipment can be decontaminated for

uncontrolled release in-situ. Centralized processing centers have proven to be a more economical means of handling the large volumes of material produced in the dismantling of a nuclear unit.

License termination survey costs are associated with the labor intensive and complex activity of verifying that contamination has been removed from the site to the levels specified by the regulating agency. This process involves a systematic survey of all remaining plant surface areas and surrounding environs, sampling, isotopic analysis, and documentation of the findings. The status of any plant components and materials not removed in the decommissioning process will also require confirmation and will add to the expense of surveying the facilities alone.

The remaining costs include allocations for heavy equipment and temporary services, as well as for other expenses such as regulatory fees and the premiums for nuclear insurance. While site operating costs are greatly reduced following the final cessation of plant operations, certain administrative functions do need to be maintained either at a basic functional or regulatory level.

TABLE 6.1

SUMMARY OF DECOMMISSIONING COST CONTRIBUTORS

Work Category	Costs 04' $ (thousands)	Percent of Total
Decontamination	1,865	0.6%
Removal	23,899	7.5%
Packaging	3,087	1.0%
Shipping	5,578	1.8%
Waste Processing & Recycling	8,877	2.8%
LLW Burial	17,446	5.5%
Demolition LLW Burial	38,528	12.1%
Staffing	70,516	22.2%
Security	4,149	1.3%
License Termination Survey	9,874	3.1%
Insurance	786	0.2%
Energy	827	0.3%
NRC & EP Fees	1,935	0.6%
NRC ISFSI Fees	3,745	1.2%
ISFSI Capital, O&M, Fixed & Security	66,391	20.9%
Non-ISFSI Expenditures	20,282	6.4%
Equipment & Supplies	28,520	9.0%
Engineering	11,121	3.5%
Total	**317,424**	**100.0%**
CPUC Disallowances		
Removal	172	48.2%
Packaging	14	3.8%
Shipping	5	1.3%
Waste Processing & Recycling	30	8.3%
LLW Burial	135	37.8%
Equipment & Supplies	2	0.5%
Total	**357**	**100.0%**

7. REFERENCES

1. U.S. Code of Federal Regulations, Title 10, Parts 30, 40, 50, 51, 70 and 72, "General Requirements for Decommissioning Nuclear Facilities," Nuclear Regulatory Commission, Federal Register Volume 53, Number 123 (p 24018 et seq.), June 27, 1988.

2. U.S. Nuclear Regulatory Commission, Regulatory Guide 1.159, "Assuring the Availability of Funds for Decommissioning Nuclear Reactors," October 2003.

3. U.S. Code of Federal Regulations, Title 10, Part 20, Subpart E, "Radiological Criteria for License Termination."

4. U.S. Code of Federal Regulations, Title 10, Parts 20 and 50, "Entombment Options for Power Reactors," Advanced Notice of Proposed Rulemaking, Federal Register Volume 66, Number 200, October 16, 2001.

5. U.S. Code of Federal Regulations, Title 10, Parts 2, 50 and 51, "Decommissioning of Nuclear Power Reactors," Nuclear Regulatory Commission, Federal Register Volume 61 (p 39278 et seq.), July 29, 1996.

6. "Nuclear Waste Policy Act of 1982 and Amendments," U.S. Department of Energy's Office of Civilian Radioactive Management, 1982.

7. Maine Yankee Atomic Power Company, Connecticut Yankee Atomic Power Company, and Yankee Atomic Power Company v. United States, U.S. Court of Appeals for the Federal Circuit decision, Docket No. 99-5138, -5139, -5140, August 31, 2000.

8. U.S. Code of Federal Regulations, Title 10, Part 50, "Domestic Licensing of Production and Utilization Facilities," Subpart 54 (bb), "Conditions of Licenses."

9. "Low-Level Radioactive Waste Policy," Public Law 96-573, 1980.

10. "Low-Level Radioactive Waste Policy Amendments Act of 1985," Public Law 99-240, January 15, 1986.

11. U.S. Code of Federal Regulations, Title 10, Part 20, Subpart E, "Radiological Criteria for License Termination," Federal Register, Volume 62, Number 139 (p 39058 et seq.), July 21, 1997.

7. REFERENCES
(continued)

12. "Establishment of Cleanup Levels for CERCLA Sites with Radioactive Contamination," EPA Memorandum OSWER No. 9200.4-18, August 22, 1997.

13. U.S. Code of Federal Regulations, Title 40, Part 141.16, "Maximum contaminant levels for beta particle and photon radioactivity from man-made radionuclides in community water systems."

14. "Memorandum of Understanding Between the Environmental Protection Agency and the Nuclear Regulatory Commission: Consultation and Finality on Decommissioning and Decontamination of Contaminated Sites," OSWER 9295.8-06a, October 9, 2002.

15. SAFSTOR Decommissioning Plan for the Humboldt Bay Power Plant, Unit No. 3, July 1984.

16. Preliminary Shutdown Decommissioning Activities Report, PG&E letter HBL-98-002 dated February 27, 1998.

17. "Multi-Agency Radiation Survey and Site Investigation Manual (MARSSIM)," NUREG/CR-1575, Rev. 1, EPA 402-R-97-016, Rev. 1, August 2000.

18. T.S. LaGuardia et al., "Guidelines for Producing Commercial Nuclear Power Plant Decommissioning Cost Estimates," AIF/NESP-036, May 1986.

19. W.J. Manion and T.S. LaGuardia, "Decommissioning Handbook," U.S. Department of Energy, DOE/EV/10128-1, November 1980.

20. "Building Construction Cost Data 2004," Robert Snow Means Company, Inc., Kingston, Massachusetts.

21. Project and Cost Engineers' Handbook, Second Edition, p. 239, American Association of Cost Engineers, Marcel Dekker, Inc., New York, New York, 1984.

22. "Strategy for Management and Disposal of Greater-Than-Class C Low-Level Radioactive Waste," Federal Register Volume 60, Number 48 (p 13424 et seq.), March 1995.

7. REFERENCES
(continued)

23. U.S. Department of Transportation, Title 49 of the Code of Federal Regulations, "Transportation," Parts 173 through 178, 1996.U.S. Code of Federal Regulations, Title 10, Parts 30, 40, 50, 51, 70 and 72, "General Requirements for Decommissioning Nuclear Facilities," Nuclear Regulatory Commission, Federal Register Volume 53, Number 123 (p 24018+), June 27, 1988.

24. Tri-State Motor Transit Company, published tariffs, Interstate Commerce Commission (ICC), Docket No. MC-109397 and Supplement, 2004.

25. "Microsoft Project 2002," Microsoft Corporation, Redmond, WA, 2002.

26. "Atomic Energy Act of 1954." (68 Stat. 919).

APPENDIX A

WORK DIFFICULTY FACTOR ADJUSTMENTS

APPENDIX A

WORK DIFFICULTY FACTOR ADJUSTMENT

AREA	AREA DESCRIPTION	Access (%)	Respiratory Protection (%)	ALARA (%)	Protective Clothing (%)	Alpha Adjust. (%)
RB1-1	Emergency Condenser	20	25	10	30	150
RB1-2	Spent Fuel Pool	10	25	20	30	350
RB1-3	Cask Shipping Area	10	25	10	30	150
RB1-4	SFP Pumps/Filters	0	25	10	30	150
RB1-5	Laydown/Cask Washdown General Area	10	25	10	30	150
RB1-6	Reactor Vessel Cavity	50	50	100	100	150
RB2-1	El -2 Suppression Pool Cooler	10	25	10	30	150
RB2-2	Elev. -14, Manlift	10	25	10	30	150
RB2-3	Elev. -24, CRD Hydraulic Filters	20	25	10	30	150
RB2-4	Elev. -34, Suppression Pool Access Hatch	20	25	10	30	150
RB2-5	Elev. -44, CRD Piping	20	25	10	30	150
RB2-6	Elev. -54, CRD Trip Accumulators	20	25	10	30	150
RB2-7	Elev. -66, Caisson Sump, REDT	20	25	10	30	150
RB2-8	Suppression Pool - North	30	50	20	30	175
RB2-9	Suppression Pool - South	30	50	20	30	175
RB3-1	Cleanup Heat Exchangers	10	50	20	30	150
RB3-2	New Fuel Storage/Fuel Pool Coolers	20	25	20	30	150
RB4-1	Shutdown Heat Exchangers/Pumps	10	25	10	30	175
RB4-2	TBDT/Floor Drain Pumps	20	50	20	50	200
RB5-1	RFB Roof (HVAC only)	0	25	10	30	150
RB5-1	RFB Roof	0	25	10	30	100
TB1-1	Main Turbine	20	25	20	30	150
TB1-2	Main Generator/Exciter House	0	0	0	0	100
TB1-3	Hydrogen Yard	0	0	10	30	100
TB2-1	Main Condenser	20	25	20	30	150
TB2-2	Seal Oil Unit/Exciter Swgr	0	0	10	30	100
TB3-1	Reactor Feed/Lube Oil/Air Systems	0	25	20	30	150
TB3-2	Propane Engine Generator	0	0	0	0	100
TB3-3	2400/480V Transformers	0	0	10	0	100
TB4-1	Laundry Drain Tank/Pipe Tunnel	10	25	20	30	175
TB4-2	Pipe Gallery	30	50	40	50	150
TB5-1	Anion/Cation/Resin Tanks	10	25	20	30	100
TB5-2	Condensate Demineralizers	10	25	20	30	150
TB6-1	Air Ejector/Gland Seal Condenser	0	25	20	30	175
TB6-2	Vacuum Pump/Condensate Pumps	0	25	10	30	150

APPENDIX A

WORK DIFFICULTY FACTOR ADJUSTMENT (continued)

AREA	AREA DESCRIPTION	Access (%)	Respiratory Protection (%)	ALARA (%)	Protective Clothing (%)	Alpha Adjust. (%)
TB7-1	Main Control Room	0	25	10	30	100
TB7-2	Instr Repair/Counting Room/Vent Equip	0	0	10	0	100
TB7-3	Locker Room/Personnel Decon	0	0	10	0	100
TB7-4	Hot Lab	0	25	20	30	150
TB7-5	Demin Control Panel/RFB Access	0	0	10	0	100
TB7-6	Hot Lab Attic	10	25	10	30	100
TB7-7	RP Office/Count Room	0	0	0	0	100
RW1-1	RWB - Concentrator/Pumps/Filters	10	25	20	30	200
RW1-2	RWB - Waste Receiver/Hold Tanks	10	25	20	30	200
RW1-3	Radwaste Demineralizer	20	50	40	50	150
RW1-4	Concentrated Waste Tanks	20	25	20	30	200
RW1-5	Resin Disposal Tank	20	50	40	50	150
RW1-6	Upper Elevation - RWB	0	25	10	30	100
RW1-7	Packaged Radwaste Storage Bldg	0	0	10	0	100
RW1-8	Low-Level Waste Storage Bldg	0	0	10	0	100
RW1-9	Solid Waste Vault	10	25	20	30	150
YD1-1	Main Transformers	0	0	0	0	100
YD1-2	CCW Heat Exchangers/Pumps	0	25	10	30	150
YD1-3	n/a			n/a		
YD1-4	n/a			n/a		
YD1-5	Intake Structure	0	0	0	0	100
YD2-1	Stack - Elev 0'0"	10	25	10	30	150
YD2-2	Stack - Elev. 12'0"	10	25	10	30	150
YD2-3	Stack - Elev. 26'0"	10	25	10	30	150
YD2-4	Condensate/Demin Water Storage Tank	0	25	10	30	150
YD2-5	Plant Exhaust Fans	0	25	20	30	150
YD2-6	Gaseous Radwaste Holdup Tunnel	20	50	20	30	150
HMS1-1	HMS Decon Area	0	25	10	30	150
HMS1-2	Calibration Lab	0	25	40	30	100

APPENDIX A

WORK DIFFICULTY FACTOR ADJUSTMENT (continued)

AREA	AREA DESCRIPTION	Access (%)	Respiratory Protection (%)	ALARA (%)	Protective Clothing (%)	Alpha Adjust. (%)
OTS1	Hydrogen Analyzer/MCC #14	0	0	0	0	100
OTS2	Moisture Skid/Sump Pump	0	0	0	0	100
OTS3	Jet Compressor/Recombiner/CG Bed	0	0	0	0	100
OTS4	Carbon Adsorbers	0	0	0	0	100
OTS5	Pipe Tunnel	0	0	0	0	100
OTS6	HEPA Filter (outside access only)	0	0	0	0	100
YARD	General Yard	0	0	0	0	100
RBP	Refueling Building - Embedded Piping	10	50	20	30	175
TBP	Turbine Building - Embedded Piping	10	50	20	30	175
YDP	Buried Yard Piping/Catch Basins, Etc.	0	0	10	0	175
RWP	Radwaste Building - Embedded Piping	10	50	20	30	175
HMSP	Hot Machine Shop - Embedded Piping	10	50	20	30	175

APPENDIX B

UNIT COST FACTOR DEVELOPMENT

APPENDIX B
UNIT COST FACTOR DEVELOPMENT

Example: Unit Factor for Removal of Contaminated Heat Exchanger < 3,000 lbs.

1. SCOPE

Heat exchangers weighing < 3,000 lbs. will be removed in one piece using a crane or small hoist. They will be disconnected from the inlet and outlet piping. The heat exchanger will be sent to the waste processing area.

2. CALCULATIONS

Activity Description	Critical Duration (minutes)
Install contamination controls, remove insulation, and mount pipe cutters	60
Disconnect inlet and outlet lines, cap openings	60
Rig for removal	30
Unbolt from mounts	30
Remove contamination controls	15
Remove heat exchanger, wrap in plastic, and send to packing area	60
Critical Duration	255
Work Adjustments (Work Difficulty Factors)	
+Duration adjustment(s)	
Site-specific labor adjustment (50% of Critical Duration)	128
	383
+ Respiratory Protection (25% of Critical Duration)	96
+ Radiation/ALARA (10% of Critical Duration)	38
Adjusted Work Duration	517
+ Protective Clothing (30% of Adjusted Work Duration)	155
Productive Work Duration	672
+ Work break adjustment (8.33 % of Productive Work Duration)	56
Total Work Duration	728

***** Total Work Duration = 728 minutes or 12.133 hours *****

APPENDIX B
(continued)

3. LABOR REQUIRED

Crew	Number	Duration (hours)	Rate ($/hr)	Cost
Laborers	3.00	12.133	$34.82	$1,267.41
Craftsmen	2.00	12.133	$45.46	$1,103.13
Foreman	1.00	12.133	$48.75	$591.48
General Foreman	0.25	12.133	$51.19	$155.27
Fire Watch	0.05	12.133	$34.82	$21.12
Health Physics Technician	1.00	12.133	$42.22	$512.26
Total Labor Cost				$3,650.67

4. EQUIPMENT & CONSUMABLES COSTS

Equipment Costs	
-Portable electric band saw 1 @ $0.25/hr x 12.133 hrs {97}	$3.03
Consumables/Materials Costs	
-Blotting paper 50 @ $0.54 sq ft {2}	$27.00
-Plastic sheets/bags 50 @ $0.13/sq ft {3}	$6.50
-Band Saw blades 1 @ $7.21/hr x 1 hr {1}	$7.21
Subtotal Cost Of Equipment And Materials	$43.74
Overhead & Sales Tax On Equipment And Materials @ 17.25%	$7.55
Total Costs, Equipment & Material	$51.29

TOTAL COST: Removal of Contaminated Heat Exchanger <3000 Pounds:
$3,701.96

Total Labor Cost:	$3,650.67
Total Equipment/Material Costs:	$51.29
Total Craft Labor Man-Hours Required Per Unit:	88.57

APPENDIX B
(continued)

5. NOTES AND REFERENCES

- Work difficulty factors were developed in conjunction with the AIF (now NEI) program to standardize nuclear decommissioning cost estimates and are delineated in Volume 1, Chapter 5 of the "Guidelines for Producing Commercial Nuclear Power Plant Decommissioning Cost Estimates," AIF/NESP-036, May 1986.

- References for equipment & consumables costs:

  1. The Wachs Companies, Quote dated 10/2001
  2. McMaster-Carr website on-line catalog
  3. R.S. Means (2004) Division 015 Section 602-0200 pg 17

- Material and consumable costs were adjusted using the regional indices for Eureka, California.

APPENDIX C

UNIT COST FACTOR LISTING
(Representative of Power Block Structures Only)

APPENDIX C

UNIT COST FACTOR LISTING
(Representative of Power Block Structures Only)

Unit Cost Factor	Cost/Unit($)
Removal of clean instrument and sampling tubing, $/linear foot	0.35
Removal of clean pipe 0.25 to 2 inches diameter, $/linear foot	3.80
Removal of clean pipe >2 to 4 inches diameter, $/linear foot	5.34
Removal of clean pipe >4 to 8 inches diameter, $/linear foot	10.41
Removal of clean pipe >8 to 14 inches diameter, $/linear foot	14.69
Removal of clean pipe >14 to 20 inches diameter, $/linear foot	20.95
Removal of clean pipe >20 to 36 inches diameter, $/linear foot	32.91
Removal of clean pipe >36 inches diameter, $/linear foot	40.20
Removal of clean valve >2 to 4 inches	69.28
Removal of clean valve >4 to 8 inches	104.09
Removal of clean valve >8 to 14 inches	146.89
Removal of clean valve >14 to 20 inches	209.53
Removal of clean valve >20 to 36 inches	329.06
Removal of clean valve >36 inches	402.04
Removal of clean pipe hanger for small bore piping	23.62
Removal of clean pipe hanger for large bore piping	83.76
Removal of clean pump, <300 pound	191.76
Removal of clean pump, 300-1000 pound	532.14
Removal of clean pump, 1000-10,000 pound	1,932.16
Removal of clean pump, >10,000 pound	3,734.28
Removal of clean pump motor, 300-1000 pound	223.29
Removal of clean pump motor, 1000-10,000 pound	803.56
Removal of clean pump motor, >10,000 pound	1,809.79
Removal of clean heat exchanger <3000 pound	1,132.14
Removal of clean heat exchanger >3000 pound	2,847.48

APPENDIX C
(continued)

Unit Cost Factor	Cost/Unit($)
Removal of clean feedwater heater/deaerator	6,553.35
Removal of clean moisture separator/reheater	13,124.87
Removal of clean tank, <300 gallons	246.71
Removal of clean tank, 300-3000 gallon	715.01
Removal of clean tank, >3000 gallons, $/square foot surface area	6.03
Removal of clean electrical equipment, <300 pound	104.59
Removal of clean electrical equipment, 300-1000 pound	363.54
Removal of clean electrical equipment, 1000-10,000 pound	727.07
Removal of clean electrical equipment, >10,000 pound	1,588.07
Removal of clean electrical transformer < 30 tons	1,203.15
Removal of clean electrical transformer > 30 tons	3,176.14
Removal of clean standby diesel generator, <100 kW	1,125.42
Removal of clean standby diesel generator, 100 kW to 1 MW	2,513.59
Removal of clean standby diesel generator, >1 MW	5,204.64
Removal of clean electrical cable tray, $/linear foot	9.00
Removal of clean electrical conduit, $/linear foot	3.78
Removal of clean mechanical equipment, <300 pound	104.59
Removal of clean mechanical equipment, 300-1000 pound	363.54
Removal of clean mechanical equipment, 1000-10,000 pound	727.07
Removal of clean mechanical equipment, >10,000 pound	1,588.07
Removal of clean HVAC equipment, <300 pound	104.59
Removal of clean HVAC equipment, 300-1000 pound	363.54
Removal of clean HVAC equipment, 1000-10,000 pound	727.07
Removal of clean HVAC equipment, >10,000 pound	1,588.07
Removal of clean HVAC ductwork, $/pound	0.41

APPENDIX C

(continued)

Unit Cost Factor	Cost/Unit($)
Removal of contaminated instrument and sampling tubing, $/linear foot	1.27
Removal of contaminated pipe 0.25 to 2 inches diameter, $/linear foot	17.66
Removal of contaminated pipe >2 to 4 inches diameter, $/linear foot	24.36
Removal of contaminated pipe >4 to 8 inches diameter, $/linear foot	55.15
Removal of contaminated pipe >8 to 14 inches diameter, $/linear foot	87.30
Removal of contaminated pipe >14 to 20 inches diameter, $/linear foot	122.16
Removal of contaminated pipe >20 to 36 inches diameter, $/linear foot	175.38
Removal of contaminated pipe >36 inches diameter, $/linear foot	195.20
Removal of contaminated valve >2 to 4 inches	277.44
Removal of contaminated valve >4 to 8 inches	517.85
Removal of contaminated valve >8 to 14 inches	833.77
Removal of contaminated valve >14 to 20 inches	1,242.01
Removal of contaminated valve >20 to 36 inches	1,714.48
Removal of contaminated valve >36 inches	2,016.68
Removal of contaminated pipe hanger for small bore piping	99.89
Removal of contaminated pipe hanger for large bore piping	317.58
Removal of contaminated pump, <300 pound	812.81
Removal of contaminated pump, 300-1000 pound	1,874.65
Removal of contaminated pump, 1000-10,000 pound	7,428.68
Removal of contaminated pump, >10,000 pound	18,803.83
Removal of contaminated pump motor, 300-1000 pound	794.87
Removal of contaminated pump motor, 1000-10,000 pound	2,399.52
Removal of contaminated pump motor, >10,000 pound	5,412.85
Removal of contaminated heat exchanger <3000 pound	3,701.96
Removal of contaminated heat exchanger >3000 pound	12,407.78

APPENDIX C
(continued)

Unit Cost Factor	Cost/Unit($)
Removal of contaminated feedwater heater/deaerator	29,375.37
Removal of contaminated moisture separator/reheater	60,980.29
Removal of contaminated tank, <300 gallons	1,399.13
Removal of contaminated tank, >300 gallons, $/square foot	35.93
Removal of contaminated electrical equipment, <300 pound	630.73
Removal of contaminated electrical equipment, 300-1000 pound	1,517.68
Removal of contaminated electrical equipment, 1000-10,000 pound	2,918.84
Removal of contaminated electrical equipment, >10,000 pound	5,539.07
Removal of contaminated electrical cable tray, $/linear foot	30.60
Removal of contaminated electrical conduit, $/linear foot	13.67
Removal of contaminated mechanical equipment, <300 pound	680.95
Removal of contaminated mechanical equipment, 300-1000 pound	1,626.77
Removal of contaminated mechanical equipment, 1000-10,000 pound	3,132.77
Removal of contaminated mechanical equipment, >10,000 pound	5,539.07
Removal of contaminated HVAC equipment, <300 pound	680.95
Removal of contaminated HVAC equipment, 300-1000 pound	1,626.77
Removal of contaminated HVAC equipment, 1000-10,000 pound	3,132.77
Removal of contaminated HVAC equipment, >10,000 pound	5,539.07
Removal of contaminated HVAC ductwork, $/pound	1.91
Removal/plasma arc cut of contaminated thin metal components, $/linear in.	3.25
Additional decontamination of surface by washing, $/square foot	6.69
Additional decontamination of surfaces by hydrolasing, $/square foot	29.27
Decontamination rig hook up and flush, $/ 250 foot length	5,761.88
Chemical flush of components/systems, $/gallon	14.54
Removal of clean standard reinforced concrete, $/cubic yard	330.68

APPENDIX C
(continued)

Unit Cost Factor	Cost/Unit($)
Removal of grade slab concrete, $/cubic yard	428.48
Removal of clean concrete floors, $/cubic yard	712.12
Removal of sections of clean concrete floors, $/cubic yard	2,260.01
Removal of clean heavily rein concrete w/#9 rebar, $/cubic yard	485.70
Removal of contaminated heavily rein concrete w/#9 rebar, $/cubic yard	1,785.34
Removal of clean heavily rein concrete w/#18 rebar, $/cubic yard	614.86
Removal of contaminated heavily rein concrete w/#18 rebar, $/cubic yard	2,362.25
Removal heavily rein concrete w/#18 rebar & steel embedments, $/cubic yard	917.44
Removal of below-grade suspended floors, $/cubic yard	712.12
Removal of clean monolithic concrete structures, $/cubic yard	1,785.36
Removal of contaminated monolithic concrete structures, $/cubic yard	1,784.21
Removal of clean foundation concrete, $/cubic yard	1,550.45
Removal of contaminated foundation concrete, $/cubic yard	1,660.07
Explosive demolition of bulk concrete, $/cubic yard	69.58
Removal of clean hollow masonry block wall, $/cubic yard	291.53
Removal of contaminated hollow masonry block wall, $/cubic yard	291.53
Removal of clean solid masonry block wall, $/cubic yard	291.53
Removal of contaminated solid masonry block wall, $/cubic yard	291.53
Backfill of below-grade voids, $/cubic yard	30.52
Removal of subterranean tunnels/voids, $/linear foot	298.27
Placement of concrete for below-grade voids, $/cubic yard	147.15
Excavation of clean material, $/cubic yard	6.84
Excavation of contaminated material, $/cubic yard	35.22
Removal of clean concrete rubble (tipping fee included), $/cubic yard	129.96
Removal of contaminated concrete rubble, $/cubic yard	26.38

APPENDIX C
(continued)

Unit Cost Factor	Cost/Unit($)
Removal of building by volume, $/cubic foot	0.72
Removal of clean building metal siding, $/square foot	3.63
Removal of contaminated building metal siding, $/square foot	3.63
Removal of standard asphalt roofing, $/square foot	5.75
Removal of transite panels, $/square foot	6.27
Scarifying contaminated concrete surfaces (drill & spall), $/square foot	12.94
Scabbling contaminated concrete floors, $/square foot	7.31
Scabbling contaminated concrete walls, $/square foot	7.79
Scabbling contaminated ceilings, $/square foot	70.11
Scabbling structural steel, $/square foot	6.04
Removal of clean overhead crane/monorail < 10 ton capacity	1,523.68
Removal of contaminated overhead crane/monorail < 10 ton capacity	1,523.68
Removal of clean overhead crane/monorail >10-50 ton capacity	3,653.33
Removal of contaminated overhead crane/monorail >10-50 ton capacity	3,653.33
Removal of polar crane > 50 ton capacity	13,413.71
Removal of gantry crane > 50 ton capacity	55,891.39
Removal of structural steel, $/pound	0.92
Removal of clean steel floor grating, $/square foot	11.52
Removal of contaminated steel floor grating, $/square foot	11.52
Removal of clean free standing steel liner, $/square foot	27.55
Removal of contaminated free standing steel liner, $/square foot	29.78
Removal of clean concrete-anchored steel liner, $/square foot	14.00
Removal of contaminated concrete-anchored steel liner, $/square foot	34.63
Placement of scaffolding in clean areas, $/square foot	23.46
Placement of scaffolding in contaminated areas, $/square foot	24.47

APPENDIX C
(continued)

Unit Cost Factor	Cost/Unit($)
Landscaping with topsoil, $/acre	23,923.01
Cost of CPC B-88 LSA box & preparation for use	1,399.36
Cost of CPC B-25 LSA box & preparation for use	1,115.22
Cost of CPC B-12V 12 gauge LSA box & preparation for use	958.49
Cost of CPC B-144 LSA box & preparation for use	5,330.60
Cost of LSA drum & preparation for use	198.41
Cost of cask liner for CNSI 14 195 cask	11,298.53
Cost of cask liner for CNSI 8 120A cask (resins)	9,318.00
Cost of cask liner for CNSI 8 120A cask (filters)	9,318.00
Decontamination of surfaces with vacuuming, $/square foot	1.61

APPENDIX D

HUMBOLDT BAY POWER PLANT UNIT 3
2009 SAFSTOR
AREA-BY-AREA ESTIMATE

Appendix D
Humboldt Bay Power Plant Unit 3 2009 SAFSTOR
AREA-BY-AREA ESTIMATE
(Thousands of 2004 Dollars)

Activity Index	Activity Description	Decon Cost	Removal Cost	Packaging Costs	Transport Costs	Off-Site Processing Costs	LLRW Disposal Costs	Other Costs	Total Contingency	Total Costs	NRC Lic. Term. Costs	Spent Fuel Management Costs	Site Restoration Costs	Processed Volume Cu. Feet	Burial Volumes Class A Cu. Feet	Burial Volumes Class B Cu. Feet	Burial Volumes Class C Cu. Feet	Burial Volumes GTCC Cu. Feet	Burial / Processed Wt. Lbs.	Craft Manhours	Utility and Contractor Manhours
PERIOD 2 - SAFSTOR Dormancy																					
	HBPP Unit #3 1996-2000 Completed Projects							16,650		16,650	16,650										
	ISFSI Design & Licensing 1998-2000							5,362		5,362		5,362									
	ISFSI Design & Licensing 2001							398		398		398									
	ISFSI Design & Licensing 2002							114		114		114									
	ISFSI Design & Licensing 2003							2,539		2,539		2,539									
	ISFSI Design & Licensing 2004							1,442		1,442		1,442									
	ISFSI Design & Licensing 2005							2,755		2,755		2,755									
	ISFSI Design & Licensing 2006							2,378		2,378		2,378									
	ISFSI Design & Licensing 2007							3,317		3,317		3,317									
	HBPP Unit #3 2001-2004 Completed Projects																				
	Radiological Characterizaton Plant Systems							711		711	711										
	Reactor Vessel Activation Analysis							100		100	100										
	Develop Cost, Schedule & Work Controls							461		461	461										
	Develop Site Facilities & Staffing Plan							170		170	170										
	Asbestos Removal							800		800	800										
	LLW Management Plan							585		585	585										
	Decom Demonstration Project							400		400	400										
	Decommissioning Design Basis							60		60	60										
	Revise Licensing Basis							100		100	100										
	Additional Funding Approved in E-3737							70		70	70										
	Legal Services for HBPP Decommissioning							175		175	175										
PERIOD 2 TOTALS								38,587		38,587	20,282	18,305									
PERIOD 3a - Reactivate Site Following SAFSTOR Dormancy																					
Period 3a Direct Decommissioning Activities																					
3a.1.1	Prepare preliminary decommissioning cost							130	20	150	150										1,300
3a.1.2	Review plant dwgs & specs.							322	48	370	370										3,218
3a.1.3	Perform detailed rad survey									a											
3a.1.4	End product description							100	15	115	115										1,000
3a.1.5	Detailed by-product inventory							24	4	27	27										236
3a.1.6	Define major work sequence							752	113	864	864										7,516
3a.1.7	Perform SER and EA							311	47	357	357										3,100
3a.1.8	Perform Site-Specific Cost Study							501	75	576	576										5,000
3a.1.9	Prepare/submit License Termination Plan							126	19	145	145										1,260
3a.1.10	Receive NRC approval of termination plan									a											
Activity Specifications																					
3a.1.11.1	Re-activate plant & temporary facilities							654	98	752	676		75								6,535
3a.1.11.2	Plant systems							275	41	317	285		32								2,753
3a.1.11.3	Reactor internals							661	99	761	761										6,615
3a.1.11.4	Reactor vessel							601	90	692	692										6,014
3a.1.11.5	Sacrificial shield							50	8	58	58										500
3a.1.11.6	Moisture separators/reheaters							100	15	115	115										1,000
3a.1.11.7	Reinforced concrete							160	24	184	92		92								1,600
3a.1.11.8	Main Turbine							209	31	241	241										2,088
3a.1.11.9	Main Condensers							209	31	241	241										2,088
3a.1.11.10	Pressure suppression structure							200	30	230	230										2,000
3a.1.11.11	Drywell							160	24	184	184										1,600
3a.1.11.12	Plant structures & buildings							170	26	196	98		98								1,704
3a.1.11.13	Waste management							461	69	530	530										4,610
3a.1.11.14	Facility & site closeout							90	14	104	52		52								900
3a.1.11	Total							4,003	600	4,604	4,255		349								40,007
Planning & Site Preparations																					
3a.1.12	Prepare dismantling sequence							241	36	277	277										2,400
3a.1.13	Plant prep. & temp. svces							2,334	350	2,684	2,684										

Appendix D
Humboldt Bay Power Plant Unit 3 2009 SAFSTOR
AREA-BY-AREA ESTIMATE
(Thousands of 2004 Dollars)

Activity Index	Activity Description	Decon Cost	Removal Cost	Packaging Costs	Transport Costs	Off-Site Processing Costs	LLRW Disposal Costs	Other Costs	Total Contingency	Total Costs	NRC Lic. Term. Costs	Spent Fuel Management Costs	Site Restoration Costs	Processed Volume Cu. Feet	Burial Volumes Class A Cu. Feet	Burial Volumes Class B Cu. Feet	Burial Volumes Class C Cu. Feet	Burial Volumes GTCC Cu. Feet	Burial / Processed Wt., Lbs.	Craft Manhours	Utility and Contractor Manhours
3a.1.14	Design water clean-up system							140	21	161	161										1,400
3a.1.15	Rigging/Cont. Cntrl Envlps/tooling/etc.							2,048	307	2,355	2,355										
3a.1.16	Procure casks/liners & containers							123	18	142	142										1,230
3a.1	Subtotal Period 3a Activity Costs							11,154	1,673	12,828	12,479		349								67,668
Period 3a Additional Costs																					
3a.2.1	Additional Support Facilities							1,985	298	2,283	2,283										
3a.2.2	Mixed Waste Disposal		2	5	5	261			41	313	313			207						59	
3a.2.3	Rebuild Refueling Building Crane							1,074	161	1,235	1,235										
3a.2.4	Sr-90 Groundwater Program							452	136	587	587										
3a.2	Subtotal Period 3a Additional Costs		2	5	5	261		3,511	635	4,418	4,418			207						59	
Period 3a Period-Dependent Costs																					
3a.4.1	Insurance							89	9	98	98										
3a.4.2	Property taxes									b											
3a.4.3	Health physics supplies		148						37	185	185										
3a.4.4	Heavy equipment rental		197						30	227	227										
3a.4.5	Disposal of DAW generated			3	1		26		7	36	36				183				3,660	50	
3a.4.6	Plant energy budget							73	11	84	84										
3a.4.7	NRC ISFSI Fees							149	30	178		178									
3a.4.8	NRC Fees							133	13	146	146										
3a.4.9	Emergency Planning Fees							51	5	56		56									
3a.4.10	ISFSI Construction & Cask Fabrication							4,379	c	4,379		4,379									
3a.4.11	Spent Fuel Pool O&M							434	65	499		499									
3a.4.12	Security Staff Cost							440	66	506	506										13,594
3a.4.13	Utility Staff Cost							2,362	354	2,716	2,716										38,169
3a.4	Subtotal Period 3a Period-Dependent Costs		345	3	1		26	8,110	627	9,111	3,998	5,112			183				3,660	50	51,763
3a.0	TOTAL PERIOD 3a COST		347	7	6	261	26	22,775	2,935	26,357	20,896	5,112	349	207	183				3,660	109	119,431
PERIOD 3b - Decommissioning Preparations																					
Period 3b Direct Decommissioning Activities																					
Detailed Work Procedures																					
3b.1.1.1	Plant systems							474	71	545	491		55								4,733
3b.1.1.2	Reactor internals							401	60	461	461										4,000
3b.1.1.3	Remaining buildings							135	20	156	39		117								1,350
3b.1.1.4	CRD housings & NIs							100	15	115	115										1,000
3b.1.1.5	Incore instrumentation							100	15	115	115										1,000
3b.1.1.6	Removal primary containment							200	30	230	230										2,000
3b.1.1.7	Reactor vessel							364	55	418	418										3,630
3b.1.1.8	Facility closeout							120	18	138	69		69								1,200
3b.1.1.9	Sacrificial shield							120	18	138	138										1,200
3b.1.1.10	Reinforced concrete							100	15	115	58		58								1,000
3b.1.1.11	Turbine & condensers							271	41	312	312										4,168
3b.1.1.12	Moisture separators & reheaters							54	8	62	62										2,000
3b.1.1.13	Radwaste building							127	19	146	132		15								2,730
3b.1.1.14	Reactor building							127	19	146	132		15								2,730
3b.1.1	Total							2,696	404	3,100	2,773		327								32,741
3b.1	Subtotal Period 3b Activity Costs							2,696	404	3,100	2,773		327								32,741
Period 3b Collateral Costs																					
3b.3.1	Decon equipment	837							126	963	963										
3b.3.2	DOC staff relocation expenses							1,553	233	1,786	1,786										
3b.3.3	Pipe cutting equipment		957						143	1,100	1,100										
3b.3.4	Spent Fuel Transfer							1,161	c	1,161		1,161									
3b.3	Subtotal Period 3b Collateral Costs	837	957					2,714	502	5,010	3,848	1,161									
Period 3b Period-Dependent Costs																					
3b.4.1	Decon supplies	34							8	42	42										
3b.4.2	Insurance							145	15	160	160										

Appendix D
Humboldt Bay Power Plant Unit 3 2009 SAFSTOR
AREA-BY-AREA ESTIMATE
(Thousands of 2004 Dollars)

Activity Index	Activity Description	Decon Cost	Removal Cost	Packaging Costs	Transport Costs	Off-Site Processing Costs	LLRW Disposal Costs	Other Costs	Total Contingency	Total Costs	NRC Lic. Term. Costs	Spent Fuel Management Costs	Site Restoration Costs	Processed Volume Cu. Feet	Burial Volumes Class A Cu. Feet	Burial Volumes Class B Cu. Feet	Burial Volumes Class C Cu. Feet	Burial Volumes GTCC Cu. Feet	Burial / Processed Wt, Lbs.	Craft Manhours	Utility and Contractor Manhours
Period 3b Period-Dependent Costs (continued)																					
3b.4.3	Property taxes									b											
3b.4.4	Health physics supplies		193						48	242	242										
3b.4.5	Heavy equipment rental		258						39	297	297										
3b.4.6	Disposal of DAW generated			4	1		34		9	47	47				240				4,800	65	
3b.4.7	Plant energy budget							96	14	110	110										
3b.4.8	NRC ISFSI Fees							328	66	394		394									
3b.4.9	NRC Fees							174	17	192	192										
3b.4.10	Emergency Planning Fees							66	7	73		73									
3b.4.11	ISFSI Construction & Cask Fabrication							6,084	655	6,739		6,739									
3b.4.12	Spent Fuel Pool O&M							569	85	655		655									
3b.4.13	Security Staff Cost							577	87	664	664										17,829
3b.4.14	DOC Staff Cost							1,465	220	1,685	1,685										28,800
3b.4.15	Utility Staff Cost							6,756	1,013	7,770	7,770										106,971
3b.4	Subtotal Period 3b Period-Dependent Costs	34	452	4	1		34	18,262	2,283	19,069	11,209	7,860			240				4,800	65	153,600
3b.0	TOTAL PERIOD 3b COST	871	1,408	4	1		34	21,672	3,190	27,179	17,831	9,021	327		240				4,800	65	186,341
PERIOD 3 TOTALS		871	1,756	11	7	261	59	44,447	6,125	53,536	38,726	14,134	676	207	423				8,460	174	305,772
PERIOD 4a - Large Component Removal																					
Period 4a Direct Decommissioning Activities																					
Nuclear Steam Supply System Removal																					
4a.1.1.1	CRDMs & NIs Removal	3	23	43	8		34		21	133	133				736				20,800	620	
4a.1.1.2	Reactor Vessel Internals	8	1,577	908	174		1,039	101	1,992	5,799	5,799				506		423		58,954	12,200	620
4a.1.1.3	Reactor Vessel	2	3,608	434	85		1,570	101	3,636	9,435	9,435				381	2,699			298,310	12,200	620
4a.1.1	Totals	13	5,208	1,385	267		2,643	202	5,650	15,367	15,367				1,624	2,699	423		378,065	25,020	1,240
Removal of Major Equipment																					
4a.1.2	Main Turbine/Generator		83	172		1,251			226	1,732	1,732			13,901					625,534	1,835	
4a.1.3	Main Condensers		66	63	4	420	61		102	717	717			4,666	436				247,000	1,452	
Disposal of Plant Systems																					
4a.1.4.1	HMS1-1		35			28			13	76	76			308					13,864	829	
4a.1.4.2	HMS1-2		4			2			1	8	8			25					1,145	98	
4a.1.4.3	HMSP		3			4			1	9	9			47					2,113	69	
4a.1.4.4	OTS-1		10			14			5	29	29			160					7,178	235	
4a.1.4.5	OTS-2		9			10			4	23	23			108					4,871	196	
4a.1.4.6	OTS-3		12			30			7	49	49			329					14,800	256	
4a.1.4.7	OTS-4		10			9			4	23	23			105					4,730	205	
4a.1.4.8	OTS-5		5			4			2	11	11			42					1,886	95	
4a.1.4.9	OTS-6		1			1			1	3	3			13					573	29	
4a.1.4.10	RB1-1		37			52			17	107	107			580					26,100	860	
4a.1.4.11	RB1-2		15			15			6	36	36			165					7,424	337	
4a.1.4.12	RB1-3		15			5			4	24	24			50					2,254	350	
4a.1.4.13	RB1-4		71			24			21	116	116			272					12,222	1,637	
4a.1.4.14	RB1-5		81			38			26	145	145			412					18,528	1,890	
4a.1.4.15	RB1-6		263			231			100	595	595			1,555					69,963	6,360	
4a.1.4.16	RB2-1		48			23			15	86	86			248					11,177	1,063	
4a.1.4.17	RB2-2		50			70			23	144	144			782					35,191	1,120	
4a.1.4.18	RB2-3		66			14			19	99	99			159					7,145	1,502	
4a.1.4.19	RB2-4		27			6			8	40	40			68					3,038	613	
4a.1.4.20	RB2-5		124			82			43	250	250			916					41,231	2,854	
4a.1.4.21	RB2-6		194			27			53	274	274			305					13,737	4,438	
4a.1.4.22	RB2-7		157			42			46	244	244			464					20,882	3,530	
4a.1.4.23	RB2-8		135			167			59	361	361			1,850					83,256	3,091	
4a.1.4.24	RB2-9		135			167			59	361	361			1,850					83,256	3,091	
4a.1.4.25	RB3-1		57			43			21	121	121			298					13,396	1,346	
4a.1.4.26	RB3-2		10			6			3	20	20			69					3,095	237	
4a.1.4.27	RB4-1		47			56			20	124	124			364					16,358	1,045	
4a.1.4.28	RB4-2		40			17			12	69	69			121					5,431	930	

Appendix D
Humboldt Bay Power Plant Unit 3 2009 SAFSTOR
AREA-BY-AREA ESTIMATE
(Thousands of 2004 Dollars)

Activity Index	Activity Description	Decon Cost	Removal Cost	Packaging Costs	Transport Costs	Off-Site Processing Costs	LLRW Disposal Costs	Other Costs	Total Contingency	Total Costs	NRC Lic. Term. Costs	Spent Fuel Management Costs	Site Restoration Costs	Processed Volume Cu. Feet	Burial Volumes Class A Cu. Feet	Burial Volumes Class B Cu. Feet	Burial Volumes Class C Cu. Feet	Burial Volumes GTCC Cu. Feet	Burial / Processed Wt., Lbs.	Craft Manhours	Utility and Contractor Manhours
Disposal of Plant Systems (continued)																					
4a.1.4.29	RB5-1		21			8			6	35	35			84					3,789	500	
4a.1.4.30	RB5-1 (HVAC Scope)		21			22			9	52	52			244					10,996	450	
4a.1.4.31	RBP		361			5			91	457	457			56					2,542	8,732	
4a.1.4.32	TB1-1		78			63			29	170	170			696					31,339	1,858	
4a.1.4.33	TB1-2		6			492			75	573	573			5,464					245,867	137	
4a.1.4.34	TB1-3		20			25			9	54	54			280					12,608	438	
4a.1.4.35	TB2-1		274			267			108	649	649			2,966					133,451	6,202	
4a.1.4.36	TB2-2		52			47			20	119	119			525					23,613	1,140	
4a.1.4.37	TB3-1		322			263			120	706	706			2,922					131,507	7,438	
4a.1.4.38	TB3-2		11			19			6	35	35			211					9,496	238	
4a.1.4.39	TB3-3		8			0			2	10			10	3					130	188	
4a.1.4.40	TB4-1		71			51			25	148	148			567					25,528	1,545	
4a.1.4.41	TB4-2		294			150			96	541	541			1,642					73,875	6,803	
4a.1.4.42	TB5-1		87			19			25	131	131			213					9,595	2,019	
4a.1.4.43	TB5-2		52			19			16	86	86			207					9,298	1,175	
4a.1.4.44	TB6-1		58			47			22	127	127			520					23,412	1,333	
4a.1.4.45	TB6-2		75			48			26	149	149			532					23,944	1,710	
4a.1.4.46	TB7-1		70			76			29	175	175			848					38,171	1,597	
4a.1.4.47	TB7-2		11			14			5	30	30			160					7,196	205	
4a.1.4.48	TB7-3		8			12			4	24	24			134					6,041	153	
4a.1.4.49	TB7-4		10			2			3	15	15			25					1,115	235	
4a.1.4.50	TB7-5		17			24			8	48	48			264					11,859	358	
4a.1.4.51	TB7-6		26			29			11	66	66			324					14,588	520	
4a.1.4.52	TB7-7		24			10			8	42	42			111					4,989	580	
4a.1.4.53	TBP		560			9			166	835			835	95					4,263	15,984	
4a.1.4	Totals		4,300			2,909			1,511	8,720	7,875		845	30,757					1,384,056	99,849	
4a.1.5	Scaffolding in support of decommissioning		123	1		10	1		33	169	169			116	6				5,775	825	
4a.1	Subtotal Period 4a Activity Costs	13	9,781	1,622	271	4,591	2,705	202	7,521	26,705	25,859		845	49,439	2,065	2,699	423		2,640,430	128,981	1,240
Period 4a Collateral Costs																					
4a.3.1	Process liquid waste	11		5	12		104		34	166	166					77			9,661	20	
4a.3.2	Small tool allowance		117						18	134	121		13								
4a.3.3	Spent Fuel Transfer							1,167	c	1,167		1,167									
4a.3	Subtotal Period 4a Collateral Costs	11	117	5	12		104	1,167	51	1,467	286	1,167	13			77			9,661	20	
Period 4a Period-Dependent Costs																					
4a.4.1	Decon supplies	37							9	46	46										
4a.4.2	Insurance							132	13	146	146										
4a.4.3	Property taxes									b											
4a.4.4	Health physics supplies		728						182	910	910										
4a.4.5	Heavy equipment rental		1,462						219	1,681	1,681										
4a.4.6	Disposal of DAW generated			33	11		292		78	414	414				2,089				41,783	568	
4a.4.7	Plant energy budget							133	20	153	153										
4a.4.8	NRC ISFSI Fees							224	45	269		269									
4a.4.9	NRC Fees							237	24	261	261										
4a.4.10	Emergency Planning Fees							73	7	80		80									
4a.4.11	ISFSI Construction & Cask Fabrication							6,519	c	6,519		6,519									
4a.4.12	Spent Fuel Pool O&M							626	94	720		720									
4a.4.13	Radwaste Processing Equipment/Services							134	20	154	154										
4a.4.14	ISFSI O&M and Contract Oversight							49	11	60		60									
4a.4.15	ISFSI Insurance							28	6	33		33									
4a.4.16	ISFSI Security							454	91	545		545									
4a.4.17	Security Staff Cost							440	66	506	506										13,577
4a.4.18	DOC Staff Cost							2,328	349	2,677	2,677										43,749
4a.4.19	Utility Staff Cost							7,869	1,180	9,049	9,049										125,211
4a.4	Subtotal Period 4a Period-Dependent Costs	37	2,190	33	11		292	19,247	2,414	24,224	15,998	8,227			2,089				41,783	568	182,537
4a.0	TOTAL PERIOD 4a COST	61	12,087	1,659	294	4,591	3,102	20,615	9,987	52,396	42,143	9,394	859	49,439	4,154	2,775	423		2,691,873	129,569	183,777

Appendix D
Humboldt Bay Power Plant Unit 3 2009 SAFSTOR
AREA-BY-AREA ESTIMATE
(Thousands of 2004 Dollars)

Activity Index	Activity Description	Decon Cost	Removal Cost	Packaging Costs	Transport Costs	Off-Site Processing Costs	LLRW Disposal Costs	Other Costs	Total Contingency	Total Costs	NRC Lic. Term. Costs	Spent Fuel Management Costs	Site Restoration Costs	Processed Volume Cu. Feet	Burial Volumes Class A Cu. Feet	Burial Volumes Class B Cu. Feet	Burial Volumes Class C Cu. Feet	Burial Volumes GTCC Cu. Feet	Burial / Processed Wt., Lbs.	Craft Manhours	Utility and Contractor Manhours
PERIOD 4b - Site Decontamination																					
Period 4b Direct Decommissioning Activities																					
Disposal of Plant Systems																					
4b.1.1.1	RW1-1		150			50			45	246	246			541					24,365	3,450	
4b.1.1.2	RW1-2		176			65			54	295	295			508					22,870	4,051	
4b.1.1.3	RW1-3		3			2			1	6	6			11					485	71	
4b.1.1.4	RW1-4		43			36			16	96	96			240					10,819	995	
4b.1.1.5	RW1-5		49			28			16	93	93			192					8,636	1,129	
4b.1.1.6	RW1-6		33			30			13	76	76			339					15,248	706	
4b.1.1.7	RW1-7		12			7			4	23	23			75					3,366	240	
4b.1.1.8	RW1-8		3			2			1	6	6			19					861	71	
4b.1.1.9	RW1-9		4			1			1	6	6			9					411	87	
4b.1.1.10	RWP		127			2			32	161			161	18					822	3,080	
4b.1.1.11	YARD		3			0			1	4	4			1					30	83	
4b.1.1.12	YD1-1		12			231			38	280			280	2,562					115,280	278	
4b.1.1.13	YD1-2		73			68			28	169	169			754					33,922	1,629	
4b.1.1.14	YD1-5		5			7			2	13	13			74					3,328	95	
4b.1.1.15	YD2-1		31			8			9	47	47			87					3,918	702	
4b.1.1.16	YD2-2		12			8			4	24	24			87					3,893	252	
4b.1.1.17	YD2-3		4			6			2	13	13			70					3,159	101	
4b.1.1.18	YD2-4		76			51			27	154	154			567					25,510	1,751	
4b.1.1.19	YD2-5		144			137			57	338	338			1,526					68,676	3,073	
4b.1.1.20	YD2-6		98			77			36	210	210			850					38,262	2,263	
4b.1.1.21	YDP		198			122			68	388	388			1,357					61,076	3,062	
4b.1.1	Totals		1,255			937			454	2,646	2,206		441	9,887					444,935	27,167	
4b.1.2	Scaffolding in support of decommissioning		185	2		16	1		49	253	253			173	9				8,663	1,237	
Decontamination of Site Buildings																					
4b.1.3.1	HMS	2	11	2	2		19		9	44	44				133				13,344	234	
4b.1.3.2	Hot Machine Shop & Calibration		2	0	0	2	2		1	7	7			19	12				1,860	42	
4b.1.3.3	RB1	334	324	58	47	532	555		480	2,331	2,331			6,553	3,964				635,278	14,317	
4b.1.3.4	RB2	557	714	16	12	248	136		531	2,214	2,214			3,049	971				220,818	28,781	
4b.1.3.5	RB3	3	19	2	2	8	22		14	70	70			95	160				19,778	422	
4b.1.3.6	RB4	3	16	2	2	8	20		12	62	62			95	143				18,032	361	
4b.1.3.7	RB5-1 (Refuel Bldg Roof)	1	2	0	0		4		2	9	9				27				2,658	53	
4b.1.3.8	RW1	14	64	8	9	2	95		49	241	241			21	681				68,974	1,454	
4b.1.3.9	Refueling		56	4	4	9	44		27	144	144			108	317				35,702	1,044	
4b.1.3.10	TB1	1	7	1	1	5	10		6	30	30			56	69				9,132	164	
4b.1.3.11	TB2	4	24	4	4	3	40		20	99	99			39	289				30,396	525	
4b.1.3.12	TB3	2	12	2	2	2	18		9	46	46			19	128				13,526	262	
4b.1.3.13	TB4	3	22	3	3	9	32		17	89	89			107	230				27,232	467	
4b.1.3.14	TB5	2	8	1	1		13		6	31	31				93				9,318	175	
4b.1.3.15	TB6	1	7	1	1		12		6	29	29				86				8,646	160	
4b.1.3.16	TB7	2	11	2	2		27		11	56	56				190				18,954	234	
4b.1.3.17	Turbine		46	3	3	10	36		23	121	121			126	258				30,493	864	
4b.1.3.18	YD1	2	7	1	1		13		6	31	31				93				9,318	164	
4b.1.3.19	YD2	8	45	7	8		84		38	190	190				601				60,096	951	
4b.1.3	Totals	940	1,398	118	105	836	1,181		1,267	5,845	5,845			10,287	8,447				1,233,555	50,671	
4b.1.4.1	Remove Spent Fuel Racks	40	8	13	11		156		64	291	291				1,109				94,284	211	
4b.1.4.2	Fuel Pool Cleanup							400	100	500	500									750	
4b.1	Subtotal Period 4b Activity Costs	980	2,846	134	116	1,788	1,337	400	1,935	9,536	9,095		441	20,348	9,565				1,781,437	80,036	
Period 4b Additional Costs																					
4b.2.1	Decon and Remediate Intake and Discharge	175	1,971	493	360		3,620		1,588	8,207	8,207				25,855				2,585,458	33,093	
4b.2.2	Contaminated Soil Removal		10		254		3,080		811	4,154	4,154				22,000				1,672,000	121	
4b.2.3	Discharge Piping	29	39	81	70		974		286	1,480	1,480				6,958				695,763	1,267	
4b.2.4	Replacement of Drains and Catch Basins		54						14	68	68									689	
4b.2.5	Asbestos Removal							250	38	288	288										

Appendix D
Humboldt Bay Power Plant Unit 3 2009 SAFSTOR
AREA-BY-AREA ESTIMATE
(Thousands of 2004 Dollars)

Activity Index	Activity Description	Decon Cost	Removal Cost	Packaging Costs	Transport Costs	Off-Site Processing Costs	LLRW Disposal Costs	Other Costs	Total Contingency	Total Costs	NRC Lic. Term. Costs	Spent Fuel Management Costs	Site Restoration Costs	Processed Volume Cu. Feet	Burial Volumes Class A Cu. Feet	Burial Volumes Class B Cu. Feet	Burial Volumes Class C Cu. Feet	Burial Volumes GTCC Cu. Feet	Burial / Processed Wt, Lbs.	Craft Manhours	Utility and Contractor Manhours
4b.2.6	Caisson Mixed Waste Removal		71	35	30		278		95	509	509				1,419				198,664	1,390	
4b.2	Subtotal Period 4b Additional Costs	204	2,144	610	714		7,952	250	2,832	14,706	14,706				56,232				5,151,885	36,560	
Period 4b Collateral Costs																					
4b.3.1	Process liquid waste	18		8	19		137		47	228	228					126			15,822	33	
4b.3.2	Small tool allowance		98						15	112	112										
4b.3.3	Decommissioning Equipment Disposition			79	4	540	50		102	774	774			6,000	353				300,000	735	
4b.3	Subtotal Period 4b Collateral Costs	18	98	87	23	540	186		163	1,115	1,115			6,000	353	126			315,822	768	
Period 4b Period-Dependent Costs																					
4b.4.1	Decon supplies	372							93	466	466										
4b.4.2	Insurance							247	25	272	272										
4b.4.3	Property taxes									b											
4b.4.4	Health physics supplies		1,129						282	1,411	1,411										
4b.4.5	Heavy equipment rental		4,562						684	5,247	5,247										
4b.4.6	Disposal of DAW generated			30	10		270		72	382	382				1,927				38,531	524	
4b.4.7	Plant energy budget							326	49	375	375										
4b.4.8	NRC ISFSI Fees							754	151	905		905									
4b.4.9	NRC Fees							280	28	308	308										
4b.4.10	Emergency Planning Fees							226	23	249		249									
4b.4.11	Radwaste Processing Equipment/Services							416	62	478	478										
4b.4.12	ISFSI O&M and Contract Oversight							1,277	100	1,377		1,377									
4b.4.13	ISFSI Insurance							249	50	299		299									
4b.4.14	ISFSI Security							4,196	839	5,036		5,036									
4b.4.15	Security Staff Cost							1,364	205	1,569	1,569										42,120
4b.4.16	DOC Staff Cost							6,850	1,028	7,878	7,878										131,040
4b.4.17	Utility Staff Cost							22,541	3,381	25,923	25,923										360,360
4b.4	Subtotal Period 4b Period-Dependent Costs	372	5,691	30	10		270	38,728	7,072	52,173	44,308	7,865			1,927				38,531	524	533,520
4b.0	TOTAL PERIOD 4b COST	1,574	10,780	860	863	2,328	9,745	39,378	12,001	77,529	69,223	7,865	441	26,348	68,076	126			7,287,675	117,889	533,520
PERIOD 4c - Building Demolition																					
Demolition of Site Buildings																					
4c.1.1	Contaminated Equipment Storage		6		30		278		47	362	362				1,989				198,920	111	
4c.1.2	Fuel Pool Tremie Removal		73		226		2,084		358	2,742	2,742				14,889				1,488,854	869	
4c.1.3	Gas Stack		47		240		2,211		375	2,873	2,873				15,793				1,579,278	714	
4c.1.4	Hot Machine Shop & Calibration		17		69		633		108	826	826				4,519				451,944	298	
4c.1.5	New Off Gas Vault		115		550		5,065		860	6,590	6,590				36,178				3,617,834	1,696	
4c.1.6	Radwaste Treatment		124		345		3,179		547	4,196	4,196				22,708				2,270,821	1,702	
4c.1.7	Refueling		372		963		8,864		1,530	11,730	11,730				63,317				6,331,674	5,260	
4c.1.8	Solid Waste Vault		5		17		154		26	202	202				1,101				110,874	67	
4c.1.9	Turbine		396		1,109		10,210		1,757	13,472	13,472				72,928				7,292,802	5,575	
4c.1.10	Yard Structures		36		89		823		142	1,091	1,091				5,881				588,131	574	
4c.1	Totals		1,192		3,639		33,502		5,750	44,083	44,083				239,303				23,930,332	16,866	
Period 4c Additional Costs																					
4c.2.1	License Termination Survey							867	260	1,127	1,127										12,480
4c.2	Subtotal Period 4c Additional Costs							867	260	1,127	1,127										12,480
Period 4c Collateral Costs																					
4c.3.1	Process liquid waste	18		8	19		138		47	230	230					127			16,005	33	
4c.3.2	Small tool allowance		1						0	1	1										
4c.3.3	Decommissioning Equipment Disposition			79	4	540	50		102	774	774			6,000	353				300,000	735	
4c.3	Subtotal Period 4c Collateral Costs	18	1	87	23	540	187		149	1,005	1,005			6,000	353	127			316,005	768	
Period 4c Period-Dependent Costs																					
4c.4.1	Decon supplies	30							7	37	37										
4c.4.2	Insurance							54	5	59	59										
4c.4.3	Property taxes									b											
4c.4.4	Health physics supplies		176						44	220	220										
4c.4.5	Heavy equipment rental		1,604						241	1,844	1,844										
4c.4.6	Disposal of DAW generated			4	1		34		9	48	48				244				4,876	66	

Appendix D
Humboldt Bay Power Plant Unit 3 2009 SAFSTOR
AREA-BY-AREA ESTIMATE
(Thousands of 2004 Dollars)

Activity Index	Activity Description	Decon Cost	Removal Cost	Packaging Costs	Transport Costs	Off-Site Processing Costs	LLRW Disposal Costs	Other Costs	Total Contingency	Total Costs	NRC Lic. Term. Costs	Spent Fuel Management Costs	Site Restoration Costs	Processed Volume Cu. Feet	Burial Volumes Class A Cu. Feet	Burial Volumes Class B Cu. Feet	Burial Volumes Class C Cu. Feet	Burial Volumes GTCC Cu. Feet	Burial / Processed Wt., Lbs.	Craft Manhours	Utility and Contractor Manhours
Period 4c Period-Dependent Costs (continued)																					
4c.4.7	Plant energy budget							45	7	52	52										
4c.4.8	NRC ISFSI Fees							173	35	208		208									
4c.4.9	NRC Fees							72	7	80	80										
4c.4.10	Emergency Planning Fees							59	6	64		64									
4c.4.11	ISFSI O&M and Contract Oversight							384	23	407		407									
4c.4.12	ISFSI Insurance							55	11	66		66									
4c.4.13	ISFSI Security							965	193	1,158		1,158									
4c.4.14	Security Staff Cost							353	53	406	406										10,903
4c.4.15	DOC Staff Cost							762	114	877	877										14,537
4c.4.16	Utility Staff Cost							3,196	479	3,676	3,676										49,669
4c.4	Subtotal Period 4c Period-Dependent Costs	30	1,779	4	1		34	6,119	1,235	9,203	7,299	1,904			244				4,876	66	75,109
4c.0	TOTAL PERIOD 4c COST	48	2,972	91	3,663	540	33,724	6,986	7,394	55,418	53,514	1,904		6,000	239,900	127			24,251,213	17,701	87,589
PERIOD 4e - License Termination																					
Period 4e Direct Decommissioning Activities																					
4e.1.1	ORISE confirmatory survey							119	36	155	155										
4e.1.2	Terminate license									a											
4e.1	Subtotal Period 4e Activity Costs							119	36	155	155										
Period 4e Additional Costs																					
4e.2.1	License Termination Survey							6,019	1,806	7,824	7,824									118,518	2,816
4e.2	Subtotal Period 4e Additional Costs							6,019	1,806	7,824	7,824									118,518	2,816
Period 4e Collateral Costs																					
4e.3.1	DOC staff relocation expenses							1,553	233	1,786	1,786										
4e.3	Subtotal Period 4e Collateral Costs							1,553	233	1,786	1,786										
Period 4e Period-Dependent Costs																					
4e.4.1	Insurance							26	3	29	29										
4e.4.2	Property taxes									b											
4e.4.3	Health physics supplies		577						144	721	721										
4e.4.4	Disposal of DAW generated			2	1		17		5	24	24				123				2,460	33	
4e.4.5	Plant energy budget							13	2	15	15										
4e.4.6	NRC ISFSI Fees							119	24	143		143									
4e.4.7	NRC Fees							42	4	46	46										
4e.4.8	Emergency Planning Fees							34	3	37		37									
4e.4.9	ISFSI O&M and Contract Oversight							264	16	279		279									
4e.4.10	ISFSI Insurance							37	7	44		44									
4e.4.11	ISFSI Security							662	132	794		794									
4e.4.12	Security Staff Cost							205	31	236	236										6,326
4e.4.13	DOC Staff Cost							560	84	644	644										10,543
4e.4.14	Utility Staff Cost							1,854	278	2,133	2,133										28,817
4e.4	Subtotal Period 4e Period-Dependent Costs		577	2	1		17	3,816	733	5,148	3,848	1,298			123				2,460	33	45,686
4e.0	TOTAL PERIOD 4e COST		577	2	1		17	11,507	2,808	14,911	13,613	1,298			123				2,460	118,551	48,502
PERIOD 4 TOTALS		1,683	26,416	2,612	4,821	7,458	46,588	78,486	32,190	200,254	178,494	20,461	1,299	81,786	312,254	3,028	423		34,233,222	383,710	853,387
PERIOD 5b - Site Restoration																					
Period 5b Direct Decommissioning Activities																					
Site Closeout Activities																					
5b.1.1	Grade & landscape site		33						5	38			38							105	
5b.1.2	Final report to NRC							156	23	180	180										1,560
5b.1	Subtotal Period 5b Activity Costs		33					156	28	218	180		38							105	1,560
Period 5b Additional Costs																					
5b.2.1	Backfill Site		227						34	261			261							775	
5b.2	Subtotal Period 5b Additional Costs		227						34	261			261							775	

Appendix D
Humboldt Bay Power Plant Unit 3 2009 SAFSTOR
AREA-BY-AREA ESTIMATE
(Thousands of 2004 Dollars)

Activity Index	Activity Description	Decon Cost	Removal Cost	Packaging Costs	Transport Costs	Off-Site Processing Costs	LLRW Disposal Costs	Other Costs	Total Contingency	Total Costs	NRC Lic. Term. Costs	Spent Fuel Management Costs	Site Restoration Costs	Processed Volume Cu. Feet	Burial Volumes Class A Cu. Feet	Burial Volumes Class B Cu. Feet	Burial Volumes Class C Cu. Feet	Burial Volumes GTCC Cu. Feet	Burial / Processed Wt., Lbs.	Craft Manhours	Utility and Contractor Manhours
Period 5b Collateral Costs																					
5b.3.1	Small tool allowance		16						2	18			18								
5b.3	Subtotal Period 5b Collateral Costs		16						2	18			18								
Period 5b Period-Dependent Costs																					
5b.4.1	Insurance							20	2	22			22								
5b.4.2	Property taxes									b											
5b.4.3	Heavy equipment rental		1,036						155	1,192			1,192								
5b.4.4	Plant energy budget							7	1	8			8								
5b.4.5	NRC ISFSI Fees							163	33	196		196									
5b.4.6	Emergency Planning Fees							38	4	42		42									
5b.4.7	ISFSI O&M and Contract Oversight							362	22	384		384									
5b.4.8	ISFSI Insurance							51	10	61		61									
5b.4.9	ISFSI Security							910	182	1,092		1,092									
5b.4.10	Security Staff Cost							228	34	262			262								7,046
5b.4.11	DOC Staff Cost							493	74	567			567								9,394
5b.4.12	Utility Staff Cost							1,175	176	1,351			1,351								18,397
5b.4	Subtotal Period 5b Period-Dependent Costs		1,036					3,447	693	5,177		1,775	3,402								34,837
5b.0	TOTAL PERIOD 5b COST		1,311					3,603	758	5,673	180	1,775	3,718							880	36,397
PERIOD 5c - Fuel Storage Operations/Shipping																					
Period 5c Collateral Costs																					
5c.3.1	Spent Fuel Transfer							405	81	486		486									
5c.3	Subtotal Period 5c Collateral Costs							405	81	486		486									
Period 5c Period-Dependent Costs																					
5c.4.1	Property taxes									b											
5c.4.2	Plant energy budget							16	2	18		18									
5c.4.3	NRC ISFSI Fees							1,007	201	1,208		1,208									
5c.4.4	Emergency Planning Fees							272	27	299		299									
5c.4.5	ISFSI Construction & Cask Fabrication							3,194	c	3,194		3,194									
5c.4.6	ISFSI O&M and Contract Oversight							2,238	134	2,372		2,372									
5c.4.7	ISFSI Insurance							298	60	357		357									
5c.4.8	*ISFSI Security*							5,608	1,122	6,730		6,730									
5c.4.9	Utility Staff Cost																				
5c.4	Subtotal Period 5c Period-Dependent Costs							12,632	1,546	14,178		14,178									
5c.0	TOTAL PERIOD 5c COST							13,037	1,627	14,664		14,664									
PERIOD 5d - GTCC shipping																					
Period 5d Direct Decommissioning Activities																					
Nuclear Steam Supply System Removal																					
5d.1.1.1	*Vessel & Internals GTCC Disposal*						365		55	419	419							17	3,228		
5d.1	Subtotal Period 5d Activity Costs						365		55	419	419							17	3,228		
Period 5d Period-Dependent Costs																					
5d.4.1	Property taxes									b											
5d.4.2	Plant energy budget							0		0		0									
5d.4.3	NRC ISFSI Fees							8	2	10		10									
5d.4.4	Emergency Planning Fees							2	0	2		2									
5d.4.5	ISFSI O&M and Contract Oversight							18	1	19		20									
5d.4.6	ISFSI Insurance							2	0	3		3									
5d.4.7	ISFSI Security							45	9	54		54									
5d.4.8	Utility Staff Cost																				
5d.4.	Subtotal Period 5d Period-Dependent Costs							76	12	88		89									
5d.0	TOTAL PERIOD 5d COST						365	76	67	508	419	89						17	3,228		

Appendix D
Humboldt Bay Power Plant Unit 3 2009 SAFSTOR
AREA-BY-AREA ESTIMATE
(Thousands of 2004 Dollars)

Activity Index	Activity Description	Decon Cost	Removal Cost	Packaging Costs	Transport Costs	Off-Site Processing Costs	LLRW Disposal Costs	Other Costs	Total Contingency	Total Costs	NRC Lic. Term. Costs	Spent Fuel Management Costs	Site Restoration Costs	Processed Volume Cu. Feet	Burial Volumes Class A Cu. Feet	Burial Volumes Class B Cu. Feet	Burial Volumes Class C Cu. Feet	Burial Volumes GTCC Cu. Feet	Burial / Processed Wt., Lbs.	Craft Manhours	Utility and Contractor Manhours
PERIOD 5e - ISFSI Decontamination																					
Period 5e Additional Costs																					
5e.2.1	ISFSI Decontamination		104	8	3		106	986	241	1,447		1,447			754				20,088	1,592	2,560
5e.2	Subtotal Period 5e Additional Costs		104	8	3		106	986	241	1,447		1,447			754				20,088	1,592	2,560
Period 5e Collateral Costs																					
5e.3.1	Small tool allowance		0							0		0									
5e.3	Subtotal Period 5e Collateral Costs		0							0		0									
Period 5e Period-Dependent Costs																					
5e.4.1	Property taxes									b											
5e.4.2	Heavy equipment rental		137						20	157		157									
5e.4.3	Plant energy budget							3	0	4		4									
5e.4.4	NRC ISFSI Fees							196	39	235		235									
5e.4.5	ISFSI O&M and Contract Oversight							146	9	155		155									
5e.4.6	ISFSI Insurance							56	6	61		61									
5e.4.7	ISFSI Security							1,088	218	1,306		1,306									
5e.4.8	Utility Staff Cost																				
5e.4.	Subtotal Period 5e Period-Dependent Costs		137					1,489	292	1,917		1,917									
5e.0	TOTAL PERIOD 5e COST		241	8	3		106	2,475	533	3,364		3,364			754				20,088	1,592	2,560
PERIOD 5f - ISFSI Site Restoration																					
Period 5f Additional Costs																					
5f.2.1	ISFSI Demolition		211					41	50	302		302								1,906	160
5f.2	Subtotal Period 5f Additional Costs		211					41	50	302		302								1,906	160
Period 5f Collateral Costs																					
5f.3.1	Small tool allowance		1						0	2		2									
5f.3	Subtotal Period 5f Collateral Costs		1						0	2		2									
Period 5f Period-Dependent Costs																					
5f.4.1	Property taxes									b											
5f.4.2	Heavy equipment rental		179						27	206		206									
5f.4.3	Plant energy budget							6	1	7		7									
5f.4.4	ISFSI O&M and Contract Oversight							293	29	322		322									
5f.4	Subtotal Period 5f Period-Dependent Costs		179					299	57	536		536									
5f.0	TOTAL PERIOD 5f COST		391					340	108	839		839								1,906	160
PERIOD 5 TOTALS			1,944	8	3		470	19,531	3,092	25,047	599	20,731	3,718		754			17	23,316	4,379	39,117
TOTAL COST TO DECOMMISSION		2,553	30,115	2,631	4,831	7,719	47,117	181,051	41,407	317,424	238,101	73,630	5,694	81,993	313,430	3,028	423	17	34,264,998	388,263	1,198,276

Appendix D
Humboldt Bay Power Plant Unit 3 2009 SAFSTOR
AREA-BY-AREA ESTIMATE
(Thousands of 2004 Dollars)

Activity Index	Activity Description	Decon Cost	Removal Cost	Packaging Costs	Transport Costs	Off-Site Processing Costs	LLRW Disposal Costs	Other Costs	Total Contingency	Total Costs	NRC Lic. Term. Costs	Spent Fuel Management Costs	Site Restoration Costs	Processed Volume Cu. Feet	Burial Volumes Class A Cu. Feet	Burial Volumes Class B Cu. Feet	Burial Volumes Class C Cu. Feet	Burial Volumes GTCC Cu. Feet	Burial / Processed Wt., Lbs.	Craft Manhours	Utility and Contractor Manhours

TOTAL COST TO DECOMMISSION WITH 17.4% CONTINGENCY:	317,424	thousands of 2004 dollars
TOTAL NRC LICENSE TERMINATION COST IS 75.0% OR	238,101	thousands of 2004 dollars
SPENT FUEL MANAGEMENT COST IS 23.2% OR:	73,630	thousands of 2004 dollars
NON-NUCLEAR DEMOLITION COST IS 1.8% OR:	5,694	thousands of 2004 dollars
TOTAL PRIMARY SITE RADWASTE VOLUME BURIED:	4,338	Cubic Feet
TOTAL PRIMARY SITE RADWASTE WEIGHT BURIED:	398,753	Pounds
TOTAL SECONDARY SITE RADWASTE VOLUME BURIED:	*61,650*	*Cubic Feet*
TOTAL SECONDARY SITE RADWASTE WEIGHT BURIED:	5,530,323	Pounds
TOTAL TERTIARY SITE RADWASTE VOLUME BURIED:	250,893	Cubic Feet
TOTAL TERTIARY SITE RADWASTE WEIGHT BURIED:	24,697,466	Pounds
TOTAL GREATER THAN CLASS C RADWASTE VOLUME GENERATED:	17	Cubic Feet
TOTAL CRAFT LABOR REQUIREMENTS:	388,263	Man-hours

End Notes:
Cell containing " - " indicates a zero value.
0 - indicates that this value is less than 0.5 but is non-zero.
a - indicates that this activity performed by decommissioning staff.
b - property taxes not included in the cost estimate
c - indicates activities under contract with zero contingency applied

APPENDIX E

HUMBOLDT BAY POWER PLANT UNIT 3
2009 SAFSTOR
CPUC COST DISALLOWANCES

Appendix E
Humboldt Bay Power Plant Unit 3 2009 SAFSTOR
CPUC COST DISALLOWANCES
(Thousands of 2004 Dollars)

Activity Index	Costs run: Mon, Aug 23, 2004 at 13:39:03 DECCER Version 2003.10.13 Activity Description	Decon Cost	Removal Cost	Packaging Costs	Transport Costs	Off-Site Processing Costs	LLRW Disposal Costs	Other Costs	Total Contingency	Total Costs	NRC Lic. Term. Costs	Spent Fuel Management Costs	Site Restoration Costs	Processed Volume Cu. Feet	Burial Volumes Class A Cu. Feet	Burial Volumes Class B Cu. Feet	Burial Volumes Class C Cu. Feet	Burial Volumes GTCC Cu. Feet	Burial / Processed Wt., Lbs.	Craft Manhours	Utility and Contractor Manhours
Disposal of Plant Systems																					
1.1	Clean Seismic Modifications		13						2	15			15							310	
1.2	Contaminated Seismic Modifications		60	0		26			19	105	105			318					12,908	1,464	
1	Totals		73	0		26			21	120	105		15	318					12,908	1,774	
Period 4 Collateral & Period-Dependent Costs																					
1	Small tool allowance		1						0	2	2										
2	Disposal of DAW generated			12	4		108		29	153	153				772				15,450	210	
Subtotal of Collateral & Period-Dependent Costs			1	12	4		108		29	155	155				772				15,450	210	
Demolition of Site Buildings																					
2.1	Seismic Modifications		72						11	82			82							1,344	
2	Totals		72						11	82			82							1,344	
TOTAL COST TO DECOMMISSION			146	12	4	26	108		61	357	260		97	318	772				28,358	3,328	

TOTAL COST TO DECOMMISSION WITH	20% CONTINGENCY	357,287	
TOTAL NRC LICENSE TERMINATION COST IS	73% OR	260,305	
NON-NUCLEAR DEMOLITION COST IS	27% OR	96,982	
TOTAL RADWASTE VOLUME BURIED			772 Cubic Feet
TOTAL RADWASTE VOLUME PROCESSED			318 Cubic Feet
TOTAL CRAFT LABOR REQUIREMENTS			3,328 Man-hours

APPENDIX F

HUMBOLDT BAY 2009 SAFSTOR DECOMMISSIONING SCHEDULE

APPENDIX F

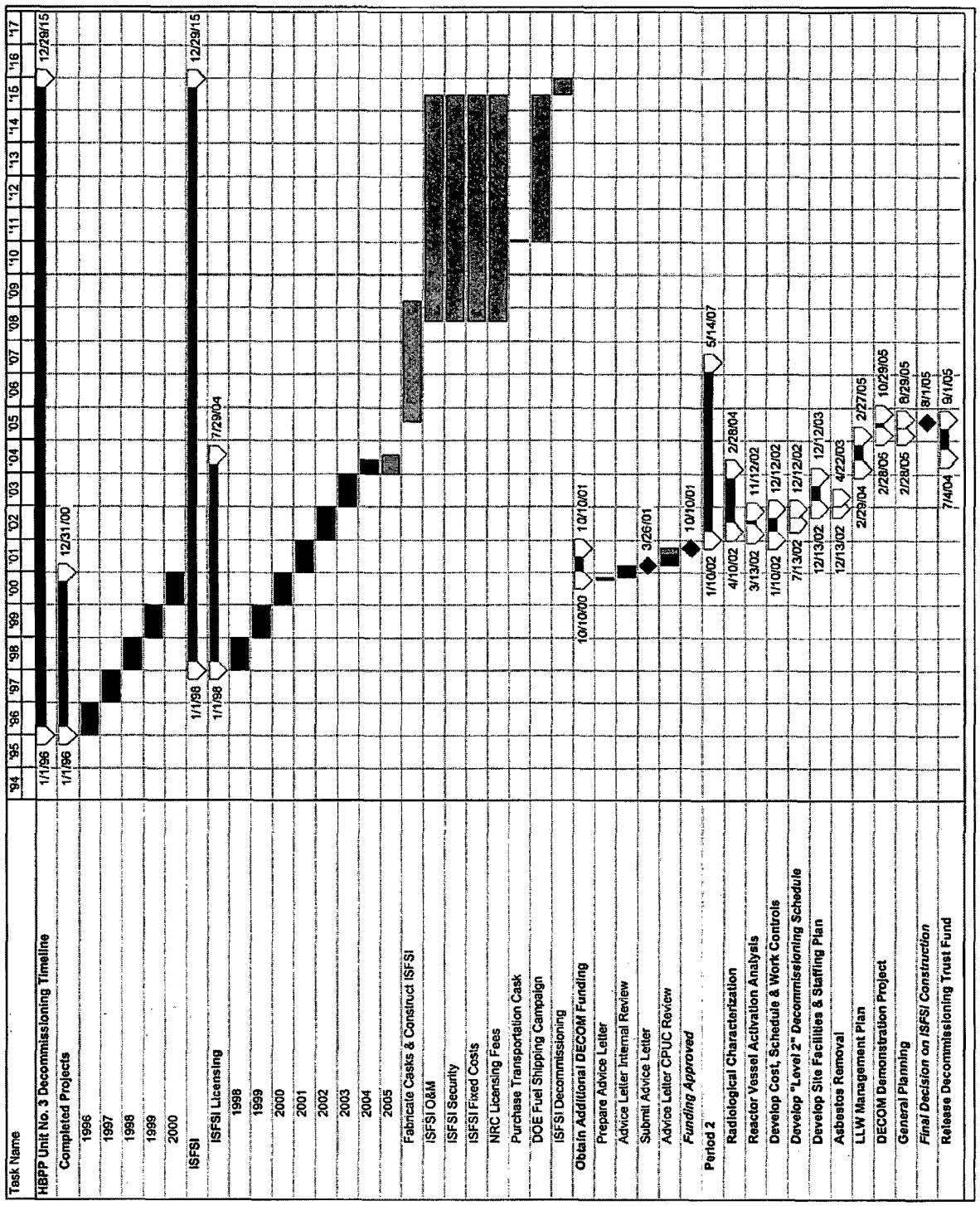
Task Name
'94 '95 '96 '97 '98 '99 '00 '01 '02 '03 '04 '05 '06 '07 '08 '09 '10 '11 '12 '13 '14 '15 '16 '17
HBPP Unit No. 3 Decommissioning Timeline
1/1/96
12/29/15
Completed Projects
1/1/96
12/31/00
1996
1997
1998
1999
2000
ISFSI
1/1/98
12/29/15
ISFSI Licensing
1/1/98
7/29/04
1998
1999
2000
2001
2002
2003
2004
2005
Fabricate Casks & Construct ISFSI
ISFSI O&M
ISFSI Security
ISFSI Fixed Costs
NRC Licensing Fees
Purchase Transportation Cask
DOE Fuel Shipping Campaign
ISFSI Decommissioning
Obtain Additional DECOM Funding
10/10/00
10/10/01
Prepare Advice Letter
Advice Letter Internal Review
3/26/01
Submit Advice Letter
Advice Letter CPUC Review
Funding Approved
10/10/01
Period 2
1/10/02
5/14/07
Radiological Characterization
4/10/02
2/28/04
Reactor Vessel Activation Analysis
3/13/02
11/12/02
Develop Cost, Schedule & Work Controls
1/10/02
12/12/02
Develop "Level 2" Decommissioning Schedule
7/13/02
12/12/02
Develop Site Facilities & Staffing Plan
12/13/02
12/12/03
Asbestos Removal
12/13/02
4/22/03
LLW Management Plan
2/29/04
2/27/05
DECOM Demonstration Project
2/28/05
10/29/05
General Planning
2/28/05
8/29/05
Final Decision on ISFSI Construction
8/1/05
Release Decommissioning Trust Fund
7/14/04
9/1/05

APPENDIX F
(continued)

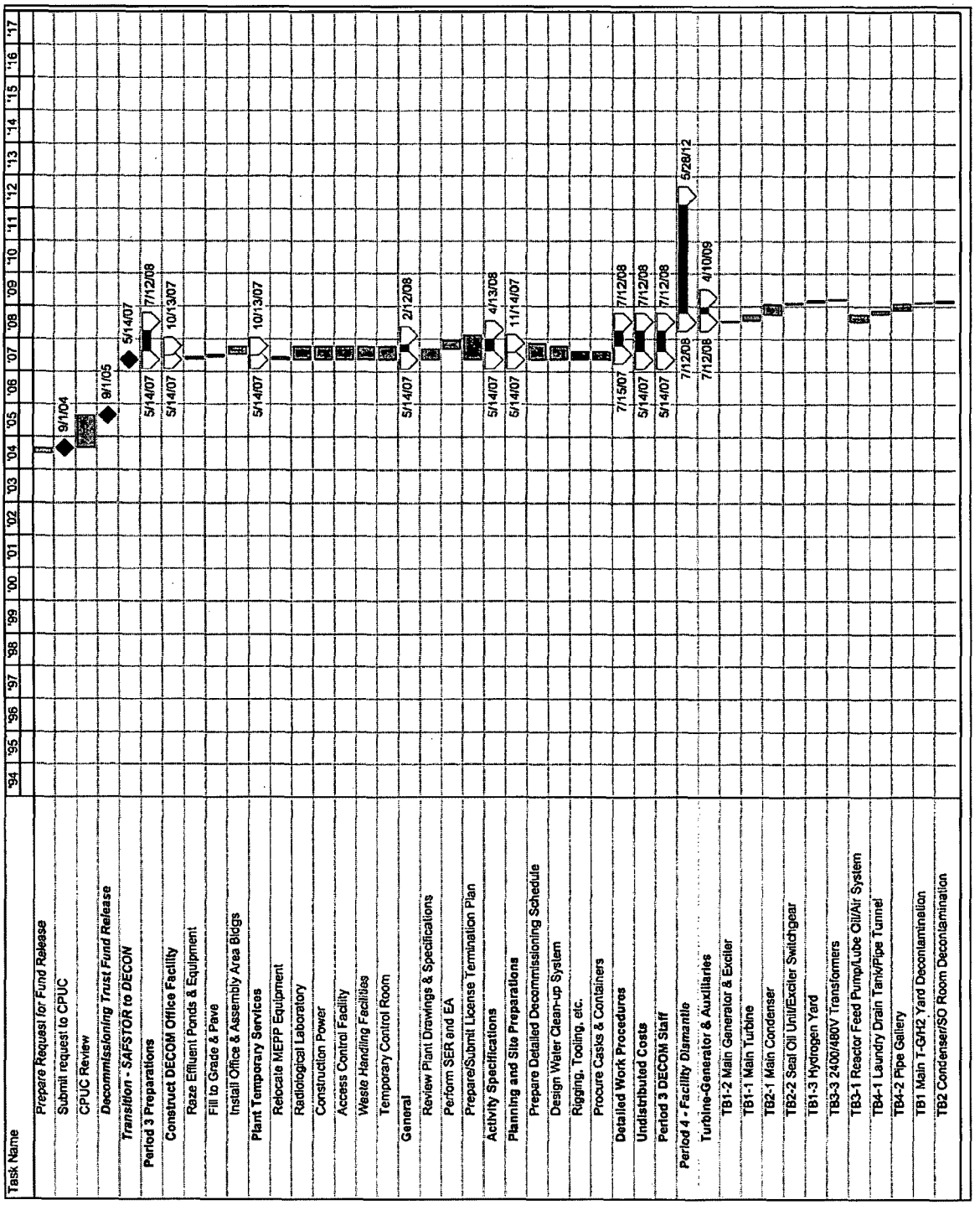

APPENDIX F
(continued)

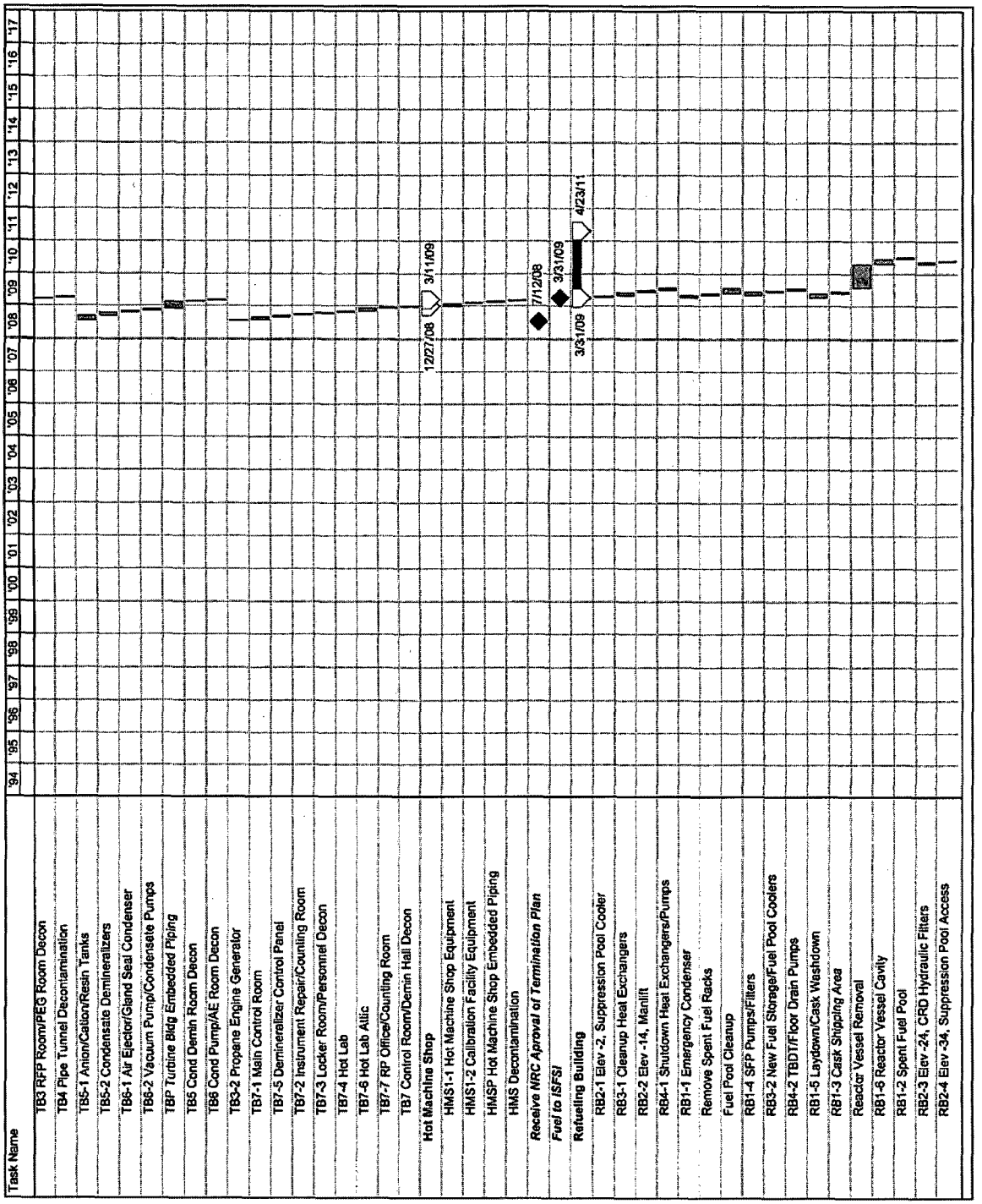

APPENDIX F
(continued)

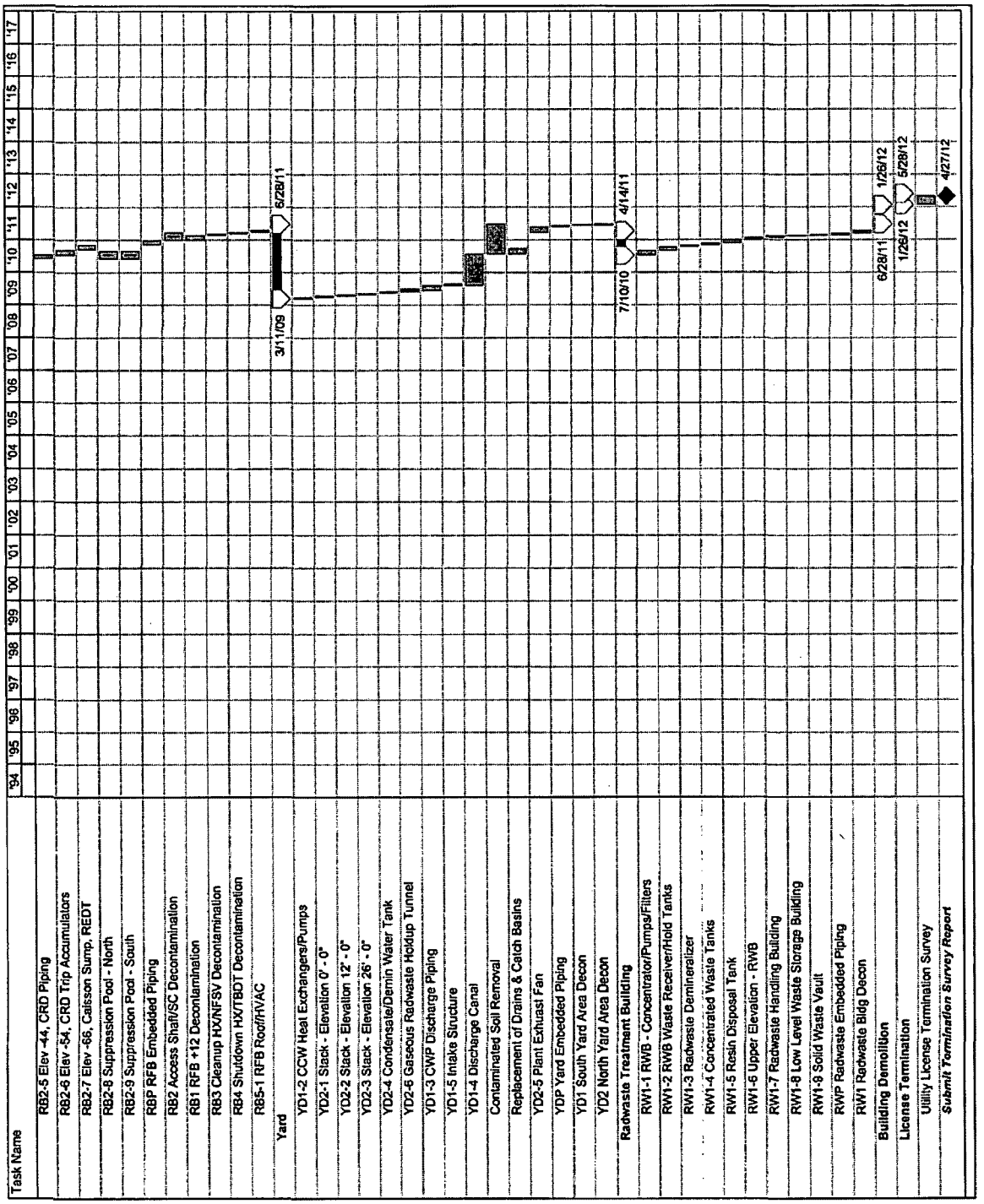

APPENDIX F
(continued)

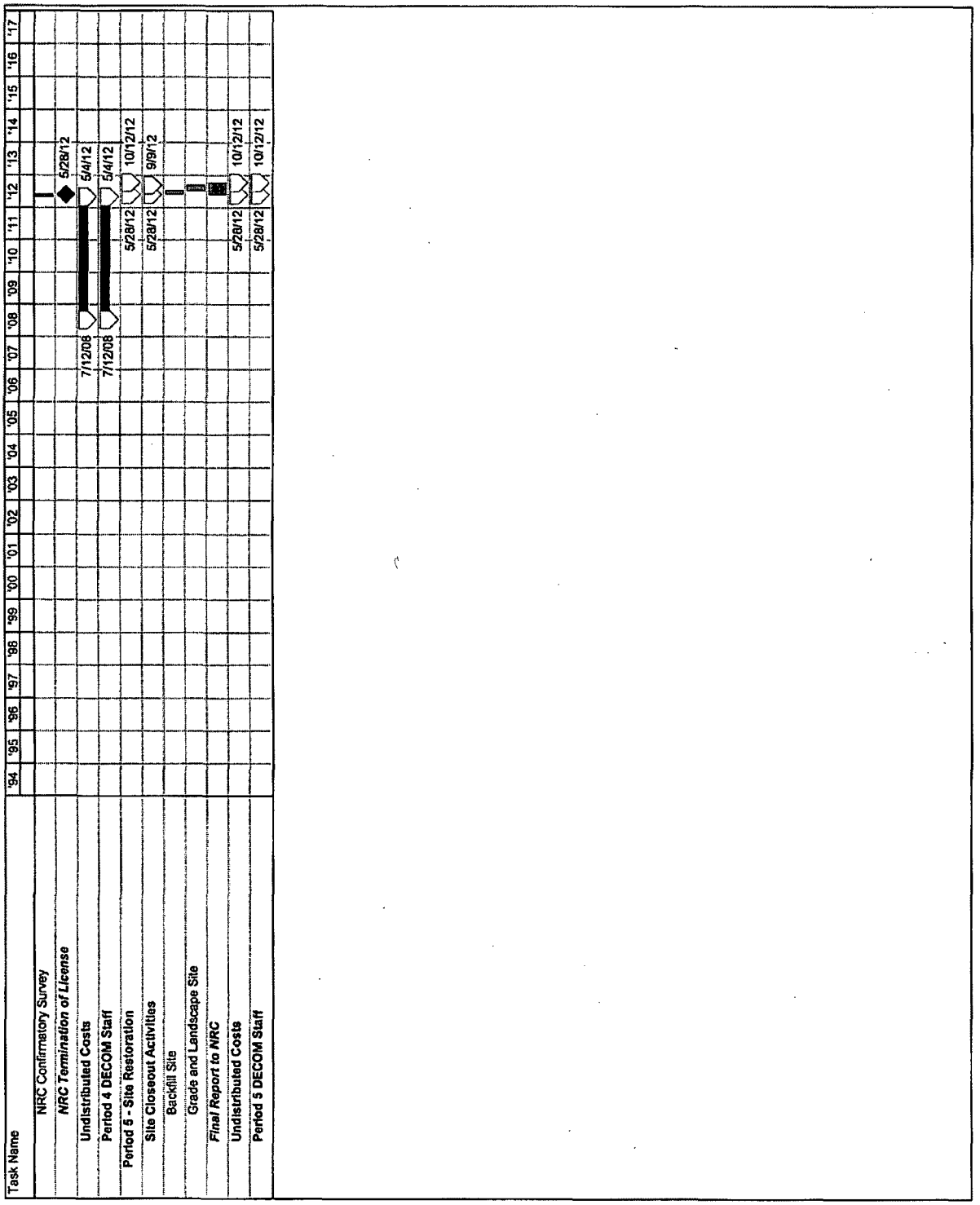

Humboldt Bay Power Plant Unit 3
Decommissioning Cost Estimate

(7 pages)

HUMBOLDT BAY POWER PLANT UNIT 3
AREA-BY-AREA ESTIMATE

		(Thousands of 2004 dollars)									Disposable Waste				(Thousands of 2007 dollars) (Escalated @ 16.99% from 2004; Revised Contingency to 25%; Revised Class A Burial Rate from $140/cf to $248/cf.)								
	Activity	2004 Decon	2004 Remove	2004 Pack	2004 Transport	2004 Off Site Process	2004 LLRW Disposal	2004 Other	2004 Contgncy	2004 Total	A CF	B CF	C CF	GTCC	2007 Decon	2007 Remove	2007 Pack	2007 Transport	2007 Off Site Process	2007 LLRW Disposal	2007 Other	2007 Contgncy	2007 Total
PERIOD 2																							
	HBPP Unit #3 1998-2000 Completed Projects							16,650		16,650											16,650		16,650
	ISFSI Design & Licensing 1998-2000							5,362		5,362											5,362		5,362
	ISFSI Design & Licensing 2001							398		398											398		398
	ISFSI Design & Licensing 2002							114		114											114		114
	ISFSI Design & Licensing 2003							2,539		2,539											2,539		2,539
	ISFSI Design & Licensing 2004							1,442		1,442											1,442		1,442
	ISFSI Design & Licensing 2005							2,755		2,755											2,755		2,755
	ISFSI Design & Licensing 2006							2,378		2,378											2,378		2,378
	ISFSI Design & Licensing 2007							3,317		3,317											3,317		3,317
	Radiological Characterization							711		711											711		711
	Reactor Vessel Activation Analysis							100		100											100		100
	Develop Cost, Schedule & Work Controls							461		461											461		461
	Develop Site Facilities & Staffing Plan							170		170											170		170
	Asbestos Removal							800		800											800		800
	LLW Management Plan							585		585											585		585
	Decom Demonstration Project							400		400											400		400
	Decommissioning Design Basis							60		60											60		60
	Revise Licensing Basis							100		100											100		100
	Additional Funding Approved in E-3737							70		70											70		70
	Legal Services for HBPP Decommissioning							175		175											175		175
	Total PERIOD 2							**38,587**		**38,587**											**38,587**		**38,587**
PERIOD 3a - Reactivate Site Following SAFSTOR Dormancy																							
3a.1.1	Prepare preliminary decommissioning costs							130	20	150										-	149	37	186
3a.1.2	Review plant dwgs & specs.							322	48	370										-	368	92	460
3a.1.3	Perform detail rad survey									a										-			a
3a.1.4	End product description							100	15	115										-	114	29	143
3a.1.5	Detailed by-product inventory							24	4	28										-	27	7	34
3a.1.6	Define major work sequence							752	113	865										-	859	215	1,074
3a.1.7	Perform SER and EA							311	47	358										-	355	89	444
3a.1.8	Perform Site-Specific Cost Study							501	75	576										-	572	143	716
3a.1.9	Prepare/submit License Termination Plan							126	19	145										-	144	36	180
3a.1.10	Receive NRC approval of termination plan									a										-			a
Activity Specifications																							
3a.1.11.1	Re-activate plant & temporary facilities							654	98	752										-	747	187	934
3a.1.11.2	Plant systems							275	41	317										-	314	79	393
3a.1.11.3	Reactor internals							661	99	761										-	755	189	944
3a.1.11.4	Reactor vessel							601	90	692										-	687	172	858
3a.1.11.5	Sacrificial shield							50	8	58										-	57	14	71
3a.1.11.6	Moisture separators/reheaters							100	15	115										-	114	29	143
3a.1.11.7	Reinforced concrete							160	24	184										-	183	46	229
3a.1.11.8	Main Turbine							209	31	241										-	239	60	298
3a.1.11.9	Main Condensers							209	31	241										-	239	60	298
3a.1.11.10	Pressure suppression structure							200	30	230										-	229	57	286
3a.1.11.11	Drywell							160	24	184										-	183	46	229
3a.1.11.12	Plant structure and buildings							170	26	196										-	194	49	243
3a.1.11.13	Waste management							461	69	530										-	527	132	658
3a.1.11.14	Facility & site closeout							90	14	104										-	103	26	129
3a.1.11	Total							4,003	600	4,604										-	4,574	1,143	5,717
Planning & Site Preparations																							
3a.1.12	Prepare dismantling sequence							241	36	277										-	275	69	344
3a.1.13	Plant prep. & temp. svces							2,334	350	2,684										-	2,667	667	3,333
3a.1.14	Design water clean-up system							140	21	161										-	160	40	200
3a.1.15	Rigging/CCEs/tooling/etc.							2,048	307	2,355										-	2,340	585	2,925
3a.1.16	Procure casks/liners & containers							123	18	142										-	141	35	176
3a.1	Subtotal Period 3a Activity Costs							11,154	1,673	12,828										-	12,744	3,186	15,930
Period 3a Additional Costs																							
3a.2.1	Additional Support Facilities							1,985	298	2,283										-	2,268	567	2,835
3a.2.2	Mixed Waste Disposal		2	5	5	261			41	313						2	6	6	298	-		78	390
3a.2.3	Rebuild Refueling Building Crane							1,074	161	1,235										-	1,227	307	1,534
3a.2.4	Sr-90 Ground Water Program							452	136	587										-	516	129	646
3a.2	Subtotal period 3a Additional Costs		2	5	5	261		3,511	635	4,418						2	6	6	298	-	4,012	1,081	5,404
Period 3a Period - Dependent Costs																							
3a.4.1	Insurance							89	9	98										-	102	25	127
3a.4.2	Property taxes									b										-			b
3a.4.3	Health physics supplies		148						37	185						169				-		42	211
3a.4.4	Heavy equipment rental		197						30	227						225				-		56	281
3a.4.5	Disposal of DAW generated			3	1		26		7	36	183						3	1		52		14	71
3a.4.6	Plant energy budget							73	11	84										-	83	21	104
3a.4.7	NRC ISFSI Fees							149	30	178										-	170	43	213
3a.4.8	NRC Fees							133	13	146										-	152	38	190
3a.4.9	Emergency Planning Fees							51	5	56										-	58	15	73
3a.4.10	ISFSI Construction & Cask Fabrication							4,379	c	4,379										-	5,003	1,251	6,254
3a.4.11	Spent Fuel Pool O&M							434	65	499										-	498	124	620
3a.4.12	Security Staff Cost							440	66	506										-	503	126	628
3a.4.13	Utility Staff Cost							2,362	354	2,716										-	2,699	675	3,373
3a.4	Subtotal Period 3a Period - Dependent Costs		345	3	1		26	8,110	627	9,111	183					394	3	1		52	9,266	2,429	12,147

HUMBOLDT BAY POWER PLANT UNIT 3
AREA-BY-AREA ESTIMATE

		(Thousands of 2004 dollars)									Disposable Waste				(Thousands of 2007 dollars) (Escalated @ 18.99% from 2004; Revised Contingency to 25%; Revised Class A Burial Rate from $140/cf to $248/cf.)								
	Activity	2004 Decon	2004 Remove	2004 Pack	2004 Transport	2004 Off Site Process	2004 LLRW Disposal	2004 Other	2004 Contgncy	2004 Total	A CF	B CF	C CF	GTCC	2007 Decon	2007 Remove	2007 Pack	2007 Transport	2007 Off Site Process	2007 LLRW Disposal	2007 Other	2007 Contgncy	2007 Total
3a.0	TOTAL PERIOD 3a COST		347	7	6	261	28	22,775	2,935	26,357	183					396	8	7	298	52	26,022	6,696	33,480
PERIOD 3b - Decommissioning Preparations																							
Period 3b Direct Decommissioning Activities																							
Detailed Work Procedures																							
3b.1.1.1	Plant systems							474	71	545										-	542	135	677
3b.1.1.2	Reactor internals							401	60	461										-	458	115	573
3b.1.1.3	Remaining buildings							135	20	156										-	154	39	193
3b.1.1.4	CRD housings & ICI tubes							100	15	115										-	114	29	143
3b.1.1.5	Incore instrumentation							100	15	115										-	114	29	143
3b.1.1.6	Removal primary containment							200	30	230										-	229	57	286
3b.1.1.7	Reactor vessel							364	55	418										-	416	104	520
3b.1.1.8	Facility closeout							120	18	138										-	137	34	171
3b.1.1.9	Sacrificial shield							120	18	138										-	137	34	171
3b.1.1.10	Reinforced concrete							100	15	115										-	114	29	143
3b.1.1.11	Turbine & condensers							271	41	312										-	310	77	387
3b.1.1.12	Moisture separators & reheaters							54	8	62										-	62	15	77
3b.1.1.13	Radwaste building							127	19	146										-	145	36	181
3b.1.1.14	Reactor building							127	19	146										-	145	36	181
3b.1.1	Total							2,696	404	3,100										-	3,080	770	3,850
3b.1	Subtotal Period 3b Activity							2,696	404	3,100										-	3,080	770	3,850
Period 3b Collateral Costs																							
3b.3.1	Decon equipment		837						126	963						956				-		239	1,195
3b.3.2	DOC staff relocation expenses							1,553	233	1,786										-	1,774	444	2,218
3b.3.3	Pipe cutting equipment			957					143	1,100							1,093			-		273	1,367
3b.3.4	Spent Fuel Transfer							1,161	c	1,161										-	1,327	332	1,658
3b.3	Subtotal Period 3b Collateral Costs		837	957				2,714	502	5,010						956	1,093			-	3,101	1,288	6,438
Period 3b Period Dependent Costs																							
3b.4.1	Decon supplies		34						8	42						39				-		10	49
3b.4.2	Insurance							145	15	160										-	166	41	207
3b.4.3	Property taxes									b										-			b
3b.4.4	Health Physics supplies		193						48	242						221				-		55	276
3b.4.5	Heavy equipment rental		258						39	297						295				-		74	368
3b.4.6	Disposal of DAW generated			4	1		34		9	47	240						5	1		69		19	93
3b.4.7	Plant energy budget							96	14	110										-	110	27	137
3b.4.8	NRC ISFSI Fees							328	66	394										-	375	94	468
3b.4.9	NRC Fees							174	17	192										-	199	50	249
3b.4.10	Emergency Planning Fees							66	7	73										-	75	19	94
3b.4.11	ISFSI Construction & Cask Fabrication							6,084	655	6,739										-	6,951	1,738	8,689
3b.4.12	Spent Fuel Pool O&M							569	85	655										-	650	163	813
3b.4.13	Security Staff Cost							577	87	664										-	659	165	824
3b.4.14	DOC Staff Cost							1,465	220	1,685										-	1,674	418	2,092
3b.4.15	Utility Staff Cost							6,756	1,013	7,770										-	7,719	1,930	9,649
3b.4	Subtotal Period 3b Period Dependent Cost	34	452	4	1			16,262	2,283	19,069	240				39	516	5	1		30	18,580	4,793	23,964
3b.0	TOTAL PERIOD 3b COST	871	1,408	4	1		34	21,672	3,190	27,179	240				995	1,609	5	1		69	24,762	6,860	34,300
PERIOD 3 TOTALS		871	1,756	11	7	261	59	44,447	6,125	53,536	423				995	2,006	13	8	298	120	50,783	13,556	67,779
PERIOD 4a - Large Component Removal																							
Period 4a D	Remove spent fuel racks																						
Nuclear Steam Supply System Removal																							
4a.1.1.1	CRDMs & ICIs Removal	3	23	43	8		34		21	133	736				4	26	49	9		130		55	273
4a.1.1.2	Reactor Vessel Internals	8	1,577	908	174		1,039	101	1,992	5,799	508		423		9	1,802	1,037	199		1,250	115	1,103	5,516
4a.1.1.3	Reactor Vessel	2	3,608	434	85		1,570	101	3,636	9,435	381	2,699			2	4,122	496	97		1,841	115	1,669	8,343
4a.1.1	Totals	13	5,208	1,385	267		2,643	202	5,650	15,367	1,624	2,699	423		15	5,950	1,582	305		3,221	231	2,826	14,131
Removal of Major Equipment																							
4a.1.2	Main Turbine/Generator		83	172		1,251			226	1,732						95	197		1,429	-		430	2,151
4a.1.3	Main Condensers		66	63	4	420	61		102	717	436					75	72	5	480	124		189	944
Disposal of Plant Systems																							
4a.1.4.1	HMS1-1		35			28			13	76						40			32	-		18	90
4a.1.4.2	HMS1-2		4			2			1	6						5			2	-		2	9
4a.1.4.3	HMSP		3			4			1	9						3			5	-		2	10
4a.1.4.4	OTS-1		10			14			5	29						11			16	-		7	34
4a.1.4.5	OTS-2		9			10			4	23						10			11	-		5	27
4a.1.4.6	OTS-3		12			30			7	49						14			34	-		12	60
4a.1.4.7	OTS-4		10			8			4	23						11			10	-		5	27
4a.1.4.8	OTS-5		5			4			2	11						6			5	-		3	13
4a.1.4.9	OTS-6		1			1			1	3						1			1	-		1	3
4a.1.4.10	RB1-1		37			52			17	107						42			59	-		25	127
4a.1.4.11	RB1-2		15			15			6	36						17			17	-		9	43
4a.1.4.12	RB1-3		15			5			4	24						17			6	-		6	29
4a.1.4.13	RB1-4		71			24			21	116						81			27	-		27	136
4a.1.4.14	RB1-5		81			38			28	145						93			43	-		34	170
4a.1.4.15	RB1-6		263			231			100	595						300			264	-		141	706
4a.1.4.16	RB2-1		48			23			15	86						55			26	-		20	101
4a.1.4.17	RB2-2		50			70			23	144						57			80	-		34	171

HUMBOLDT BAY POWER PLANT UNIT 3
AREA-BY-AREA ESTIMATE

		(Thousands of 2004 dollars)									Disposable Waste				(Thousands of 2007 dollars) (Escalated @ 16.99% from 2004; Revised Contingency to 25%; Revised Class A Burial Rate from $140/cf to $248/cf.)								
	Activity	2004 Decon	2004 Remove	2004 Pack	2004 Transport	2004 Off Site Process	2004 LLRW Disposal	2004 Other	2004 Contgncy	2004 Total	A CF	B CF	C CF	GTCC	2007 Decon	2007 Remove	2007 Pack	2007 Transport	2007 Off Site Process	2007 LLRW Disposal	2007 Other	2007 Contgncy	2007 Total
4a.1.4.18	RB2-3		66			14			19	99						75			16	-		23	114
4a.1.4.19	RB2-4		27			6			8	40						31			7	-		9	47
4a.1.4.20	RB2-5		124			82			43	250						142			94	-		59	294
4a.1.4.21	RB2-6		194			27			53	274						222			31	-		63	316
4a.1.4.22	RB2-7		157			42			46	244						179			48	-		57	284
4a.1.4.23	RB2-8		135			167			59	361						154			191	-		86	431
4a.1.4.24	RB2-9		135			167			59	361						154			191	-		86	431
4a.1.4.25	RB3-1		57			43			21	121						65			49	-		29	143
4a.1.4.26	RB3-2		10			6			3	20						11			7	-		5	23
4a.1.4.27	RB4-1		47			56			20	124						54			64	-		29	147
4a.1.4.28	RB4-2		40			17			12	61						46			19	-		16	81
4a.1.4.29	RB5-1		21			8			6	35						24			9	-		8	41
4a.1.4.30	RB5-1 (HVAC Scope)		21			22			9	52						24			25	-		12	61
4a.1.4.31	RBP		361			5			91	457						412			6	-		105	523
4a.1.4.32	TB1-1		78			63			29	170						89			72	-		40	201
4a.1.4.33	TB1-2		6			492			75	573						7			562	-		142	711
4a.1.4.34	TB1-3		20			25			9	54						23			29	-		13	64
4a.1.4.35	TB2-1		274			267			108	649						313			305	-		155	773
4a.1.4.36	TB2-2		52			47			20	119						59			54	-		28	141
4a.1.4.37	TB3-1		322			263			120	706						368			300	-		167	835
4a.1.4.38	TB3-2		11			19			6	35						13			22	-		9	43
4a.1.4.39	TB3-3		8						2	10						9				-		2	11
4a.1.4.40	TB4-1		71			51			25	148						81			58	-		35	174
4a.1.4.41	TB4-2		294			150			96	541						336			171	-		127	634
4a.1.4.42	TB5-1		87			19			25	131						99			22	-		30	151
4a.1.4.43	TB5-2		52			19			16	86						59			22	-		20	101
4a.1.4.44	TB6-1		58			47			22	127						66			54	-		30	150
4a.1.4.45	TB6-2		75			48			26	149						86			55	-		35	176
4a.1.4.46	TB7-1		70			76			29	175						80			87	-		42	209
4a.1.4.47	TB7-2		11			14			5	30						13			16	-		7	36
4a.1.4.48	TB7-3		8			12			4	24						9			14	-		6	29
4a.1.4.49	TB7-4		10			2			3	15						11			2	-		3	17
4a.1.4.50	TB7-5		17			24			8	48						19			27	-		12	59
4a.1.4.51	TB7-6		26			29			11	66						30			33	-		16	79
4a.1.4.52	TB7-7		24			10			8	42						27			11	-		10	49
4a.1.4.53	TBP		660			9			166	835						754			10	-		191	955
4a.1.4	Totals		4,300			2,909			1,511	8,720						4,913			3,324	-		2,059	10,296
4a.1.5	Erect scaffolding for systems removal		123	1	0	10	1		33	169	6					141	1	0	11	2		39	194
4a.1	Subtotal Period 4a Activity Costs	13	9,781	1,622	271	4,591	2,705	202	7,521	26,705	2,085	2,699	423		15	11,175	1,853	310	5,245	3,347	231	5,544	27,720
Period 4a Collateral Costs																							
4a.3.1	Process liquid waste	11		5	12		104		34	166		77			13		6	14		119		38	189
4a.3.2	Small tool allowance		117						18	134						134				-		33	167
4a.3.3	Spent Fuel Transfer							1,167	c	1,167										-	1,333	c	1,333
4a.3	Subtotal Period 4a Collateral Costs	11	117	5	12		104	1,167	51	1,467		77			13	134	6	14		119	1,333	404	2,022
Period 4a Period Dependent Costs																							
4a.4.1	Decon supplies	37							9	46					42					-		11	53
4a.4.2	Insurance							132	13	146										-	151	38	189
4a.4.3	Property taxes									b										-			
4a.4.4	Health Physics supplies		728						182	910						832				-		208	1,040
4a.4.5	Heavy equipment rental		1,462						219	1,681						1,670				-		418	2,088
4a.4.6	Disposal of DAW generated			33	11		292		78	414	2,089						38	13		593		161	803
4a.4.7	Plant energy budget							133	20	153										-	152	38	190
4a.4.8	NRC ISFSI Fees							224	45	269										-	256	64	320
4a.4.9	NRC Fees							237	24	261										-	271	68	338
4a.4.10	Emergency Planning Fees							73	7	80										-	83	21	104
4a.4.11	ISFSI Construction & Cask Fabrication							6,519	c	6,519										-	7,448	1,862	9,310
4a.4.12	Spent Fuel Pool O&M							626	94	720										-	715	179	894
4a.4.13	Radwaste Processing Equipment/Services							134	20	154										-	153	38	191
4a.4.14	ISFSI O&M and Contract Oversight							49	11	60										-	56	14	70
4a.4.15	ISFSI Insurance							28	6	33										-	32	8	40
4a.4.16	ISFSI Security							454	91	545										-	519	130	648
4a.4.17	Security Staff Cost							440	66	506										-	503	126	628
4a.4.18	DOC Staff Cost							2,328	349	2,677										-	2,660	665	3,325
4a.4.19	Utility Staff Cost							7,869	1,180	9,049										-	8,991	2,248	11,239
4a.4	Subtotal Period 4a Period Dependent Cost	37	2,190	33	11		292	19,247	2,414	24,224	2,089				42	2,502	38	13		593	21,991	6,295	31,473
4a.0	TOTAL PERIOD 4a COST	61	12,087	1,659	294	4,591	3,102	20,615	9,987	52,396	4,154	2,775	423		70	13,810	1,896	336	5,245	4,059	23,554	12,242	61,212
PERIOD 4b - Site Decontamination																							
Period 4b Direct Decommissioning Activities																							
Disposal of Plant Systems																							
4b.1.1.1	RW1-1		150			50			45	246						171			57	-		57	286
4b.1.1.2	RW1-2		176			65			54	295						201			74	-		69	344
4b.1.1.3	RW1-3		3			2			1	6						3			2	-		1	7
4b.1.1.4	RW1-4		43			36			16	96						49			41	-		23	113
4b.1.1.5	RW1-5		49			28			16	93						56			32	-		22	110
4b.1.1.6	RW1-6		33			30			13	76						38			34	-		18	90
4b.1.1.7	RW1-7		12			7			4	23						14			8	-		5	27
4b.1.1.8	RW1-8		3			2			1	6						3			2	-		1	7
4b.1.1.9	RW1-9		4			1			1	6						5			1	-		1	7
4b.1.1.10	RWP		127			2			32	161						145			2	-		37	184
4b.1.1.11	YARD		3						1	4						3				-		1	4

HUMBOLDT BAY POWER PLANT UNIT 3
AREA-BY-AREA ESTIMATE

		(Thousands of 2004 dollars)									Disposable Waste				(Thousands of 2007 dollars) (Escalated @ 16.99% from 2004; Revised Contingency to 25%; Revised Class A Burial Rate from $140/cf to $248/cf.)								
	Activity	2004 Decon	2004 Remove	2004 Pack	2004 Transport	2004 Off Site Process	2004 LLRW Disposal	2004 Other	2004 Contgncy	2004 Total	A CF	B CF	C CF	GTCC	2007 Decon	2007 Remove	2007 Pack	2007 Transport	2007 Off Site Process	2007 LLRW Disposal	2007 Other	2007 Contgncy	2007 Total
4b.1.1.12	YD1-1		12			231			38	280						14			264	-		69	347
4b.1.1.13	YD1-2		73			68			28	168						83			78	-		40	201
4b.1.1.14	YD1-5		5			7			2	13						6			8	-		3	17
4b.1.1.15	YD2-1		31			8			9	47						35			9	-		11	56
4b.1.1.16	YD2-2		12			8			4	24						14			9	-		6	29
4b.1.1.17	YD2-3		4			6			2	13						5			7	-		3	14
4b.1.1.18	YD2-4		76			51			27	154						87			58	-		36	181
4b.1.1.19	YD2-5		144			137			57	338						165			157	-		80	401
4b.1.1.20	YD2-6		98			77			36	210						112			88	-		50	250
4b.1.1.21	YDP		198			122			68	388						226			139	-		91	457
4b.1.1	Totals		1,255			837			454	2,646						1,434			1,071	-		626	3,131
4b.1.2	Scaffolding in support of decommissioning		185	2		16	1		49	253	9					211	2		18	2		59	293
Decontamination of Site Buildings																							
4b.1.3.1	HMS	2	11	2	2		19		9	44	133				2	13	2	2		38		14	72
4b.1.3.2	Hot Machine Shop & Calibration		2			2	2		1	7	12					2			2	4		2	10
4b.1.3.3	RB1	334	324	58	47	532	555		480	2,331	3,964				382	370	66	54	608	1,125		651	3,256
4b.1.3.4	RB2	557	714	16	12	248	138		531	2,214	971				636	816	18	14	283	278		511	2,554
4b.1.3.5	RB3	3	19	2	2	8	22		14	70	160				3	22	2	2	9	45		21	105
4b.1.3.6	RB4	3	16	2	2	8	20		12	62	143				3	18	2	2	9	41		19	95
4b.1.3.7	RB5-1 (Refueling Bldg Roof)	1	2				4		2	9	27				1	2				8		3	14
4b.1.3.8	RW1	14	64	8	9	2	95		49	241	681				16	73	9	10	2	193		76	380
4b.1.3.9	Refueling		56	4	4	9	44		27	144	317					64	5	5	10	90		43	216
4b.1.3.10	TB1	1	7	1	1	5	10		6	30	69				1	8	1	1	6	20		9	46
4b.1.3.11	TB2	4	24	4	4	3	40		20	99	289				5	27	5	5	3	82		32	158
4b.1.3.12	TB3	2	12	2	2	2	18		9	46	128				2	14	2	2	2	38		15	74
4b.1.3.13	TB4	3	22	3	3	9	32		17	89	230				3	25	3	3	10	65		28	138
4b.1.31.14	TB5	2	8	1	1		13		6	31	93				2	9	1	1		28		10	50
4b.1.3.15	TB6	1	7	1	1		12		6	29	86				1	8	1	1		24		9	45
4b.1.3.16	TB7	2	11	2	2		27		11	56	190				2	13	2	2		54		18	92
4b.1.3.17	Turbine		46	3	3	10	36		23	121	258					53	3	3	11	73		36	180
4b.1.3.18	YD1	2	7	1	1		13		6	31	93				2	8	1	1		26		10	49
4b.1.3.19	YD2	8	45	7	8		84		38	190	601				9	51	8	9		170		62	310
4b.1.3	Totals	940	1,398	118	105	836	1,181		1,267	5,845	8,447				1,074	1,597	135	120	955	2,396		1,569	7,847
4b.1.4.1	Remove Spent Fuel Racks	40	8	13	11		156		64	291	1,109				46	9	15	13		316		99	497
4b.1.4.2	Fuel Pool Cleanup							400	100	500										-	457	114	571
4b.1	Subtotal Period 4b Activity Costs	980	2,846	134	116	1,788	1,337	400	1,935	9,536	9,565				1,120	3,252	153	133	2,043	2,713	457	2,467	12,337
Period 4b Additional Costs																							
4b.2.1	Decon and Remediate Intake and Discharge	175	1,971	493	360		3,620		1,588	8,207	25,855				200	2,252	563	411		7,340		2,692	13,458
4b.2.2	Contaminated Soil Removal		10		254		3,080		811	4,154	22,000					11		290		6,245		1,637	8,184
4b.2.3	Discharge Piping	29	39	81	70		974		286	1,480	6,958				33	45	93	80		1,975		556	2,782
4b.2.4	Replacement of Drains and Catch Basins		54						14	68						62				-		15	77
4b.2.5	Asbestos Removal							250	38	288										-	286	71	357
4b.2.6	Caisson Mixed Waste Removal		71	35	30		278		95	509	1,419					81	40	34		493		162	811
4b.2	Subtotal Period 4b Additional Costs	204	2,144	610	714		7,952	250	2,832	14,706	56,232				233	2,450	697	816		16,054	286	5,134	25,669
Period 4b Collateral Costs																							
4b.3.1	Process liquid wastes	18		8	19		137		47	228		126			21		9	22		157		52	260
4b.3.2	Small tool allowance		98						15	112						112				-		28	140
4b.3.3	Decommissioning Equipment Disposition			79	4	540	50		102	774	353						90	5	617	101		203	1,016
4b.3	Subtotal Period 4b Collateral Costs	18	98	87	23	540	186		163	1,115	353	126			21	112	99	26	617	258		283	1,414
Period 4b Period Dependent Costs																							
4b.4.1	Decon supplies	372							93	466					425					-		106	531
4b.4.2	Insurance							247	25	272										-	282	71	353
4b.4.3	Property taxes									b										-			b
4b.4.4	Health Physics supplies		1,129						282	1,411						1,290				-		322	1,612
4b.4.5	Heavy equipment rental		4,562						684	5,247						5,212				-		1,303	6,515
4b.4.6	Disposal of DAW generated			30	10		270		72	382	1,927						34	11		547		148	741
4b.4.7	Plant energy budget							326	49	375										-	372	93	466
4b.4.8	NRC ISFSI Fees							754	151	905										-	861	215	1,077
4b.4.9	NRC Fees							280	28	308										-	320	80	400
4b.4.10	Emergency Planning Fees							226	23	249										-	258	65	323
4b.4.11	Radwaste Processing Equipment/Services							416	62	478										-	475	119	594
4b.4.12	ISFSI O&M and Contract Oversight							1,277	100	1,377										-	1,459	365	1,824
4b.4.13	ISFSI Insurance							249	50	299										-	284	71	356
4b.4.14	ISFSI Security							4,198	839	5,036										-	4,794	1,199	5,993
4b.4.15	Security Staff Cost							1,364	205	1,569										-	1,558	390	1,948
4b.4.16	DOC Staff Cost							6,850	1,028	7,878										-	7,827	1,957	9,783
4b.4.17	Utility Staff Cost							22,541	3,381	25,923										-	25,754	6,439	32,193
4b.4	Subtotal Period 4b Period Dependent Cost	372	5,691	30	10		270	38,728	7,072	52,173	1,927				425	6,502	34	11		547	44,249	12,942	64,712
4b.0	TOTAL PERIOD 4b COST	1,574	10,780	860	863	2,328	9,745	39,378	12,001	77,529	68,076	126			1,798	12,317	983	986	2,660	19,570	44,992	20,826	104,132
PERIOD 4c - Building Demolition																				101		25	126
Demolition of Site Buildings																							
4c.1.1.1	Contaminated Equipment Storage		6		30		278		47	362	1,989					7		34		564		151	757
4c.1.1.2	Fuel Pool Trenie Removal		73		226		2,084		358	2,742	14,889					83		258		4,226		1,142	5,710
4c.1.1.3	Gas Stack		47		240		2,211		375	2,873	15,793					54		274		4,483		1,203	6,014
4c.1.1.4	Hot Machine Shop & Calibration		17		69		633		108	826	4,519					19		79		1,283		345	1,727
4c.1.1.5	New Off Gas Vault		115		550		5,065		860	6,590	36,178					131		628		10,270		2,758	13,788
4c.1.1.6	Radwaste Treatment		124		345		3,179		547	4,196	22,708					142		394		6,446		1,746	8,728
4c.1.1.7	Refueling		372		963		8,864		1,530	11,730	63,317					425		1,100		17,974		4,875	24,374

HUMBOLDT BAY POWER PLANT UNIT 3
AREA-BY-AREA ESTIMATE

		(Thousands of 2004 dollars)									Disposable Waste				(Thousands of 2007 dollars) (Escalated @ 16.99% from 2004; Revised Contingency to 25%; Revised Class A Burial Rate from $140/cf to $248/cf.)								
	Activity	2004 Decon	2004 Remove	2004 Pack	2004 Transport	2004 Off Site Process	2004 LLRW Disposal	2004 Other	2004 Contgncy	2004 Total	A CF	B CF	C CF	GTCC	2007 Decon	2007 Remove	2007 Pack	2007 Transport	2007 Off Site Process	2007 LLRW Disposal	2007 Other	2007 Contgncy	2007 Total
4c.1.1.8	Solid Waste Vault		5		17		154		26	202	1,101					6		19		312		84	422
4c.1.1.9	Turbine		398		1,109		10,210		1,757	13,472	72,928					452		1,267		20,703		5,606	28,028
4c.1.1.10	Yard Structures		36		89		823		142	1,091	5,881					41		102		1,669		453	2,265
4c.1	Totals		1,192		3,639		33,502		5,750	44,083	239,303					1,362		4,158		67,933		18,363	91,816
Period 4c Additional Costs																							
4c.2.1	License Termination Survey							867	260	1,127										-	991	248	1,238
4c.2.1	Subtotal Period 4c Additional Costs							867	260	1,127										-	991	248	1,238
Period 4c Collateral Costs																							
4c.3.1	Process liquid waste	18		8	19		138		47	230		127			21		9	22		158		52	261
4c.3.2	Small tool allowance		1							1						1				-		0	1
4c.3.3	Decommissioning Equipment Disposition			79	4	540	50		102	774							90	5	617	57		192	961
4c.3	Subtotal Period 4b Collateral Costs	18	1	87	23	540	187		149	1,005		127			21	1	99	26	617	214		245	1,223
Period 4c Period - Dependent Costs																							
4c.4.1	Decon supplies	30							7	37					34					-		9	43
4c.4.2	Insurance							54	5	59										-	62	15	77
4c.4.3	Property taxes									b										-			
4c.4.4	Health Physics supplies		178						44	220						201				-		50	251
4c.4.5	Heavy equipment rental		1,604						241	1,844						1,833				-		458	2,291
4c.4.6	Disposal of DAW generated			4	1		34		9	48	244						5	1		69		19	93
4c.4.7	Plant energy budget							45	7	52										-	51	13	64
4c.4.8	NRC ISFSI Fees							173	35	208										-	198	49	247
4c.4.9	NRC Fees							72	7	80										-	82	21	103
4c.4.10	Emergency Planning Fees							58	6	64										-	67	17	84
4c.4.11	ISFSI O&M and Contract Oversight							384	23	407										-	439	110	548
4c.4.12	ISFSI Insurance							55	11	66										-	63	16	79
4c.4.13	ISFSI Security							965	193	1,158										-	1,103	276	1,378
4c.4.14	Security Staff Cost							353	53	406										-	403	101	504
4c.4.15	DOC Staff Cost							762	114	877										-	871	218	1,088
4c.4.16	Utility Staff Cost							3,196	479	3,676										-	3,652	913	4,565
4c.4	Subtotal Period 4c Period Dependent Cost	30	1,779	4	1		34	6,119	1,235	9,203	244				34	2,033	5	1		69	6,991	2,283	11,416
4c.0	TOTAL PERIOD 4c COST	48	2,972	91	3,663	540	33,724	6,986	7,394	55,418	239,900	127			55	3,396	104	4,185	617	68,261	7,982	21,150	105,749
Period 4e - License Termination																							
4e.1.1	ORISE confirmatory survey							119	36	155										-	136	34	170
4e.1.2	Terminate License									a										-			
4e.1	Subtotal Period 4e Activity Costs							119	36	155										-	136	34	170
Period 4e Additional Costs																							
4e.2.1	License Termianation Survey							6,019	1,806	7,824										-	6,877	1,719	8,596
4e.2	Subtotal Period 4e Additional Costs							6,019	1,806	7,824										-	6,877	1,719	8,596
Period 4e Collateral Costs																							
4e.3.1	DOC staff relocation expenses							1,553	233	1,786										-	1,774	444	2,218
4e.3	Subtotal Period 4e Collateral Costs							1,553	233	1,786										-	1,774	444	2,218
Period 4e Period - Dependent Costs																							
4e.4.1	Insurance							26	3	29										-	30	7	37
4e.4.2	Property taxes									b										-			b
4e.4.3	Health Physics supplies		577						144	721						659				-		165	824
4e.4.4	Disposal of DAW generated			2	1		17		5	24	123						2	1		35		10	48
4e.4.5	Plant energy budget							13	2	15										-	15	4	19
4e.4.6	NRC ISFSI Fees							119	24	143										-	136	34	170
4e.4.7	NRC Fees							42	4	46										-	48	12	60
4e.4.8	Emergency Planning Fees							34	3	37										-	39	10	49
4e.4.9	ISFSI O&M and Contract Oversight							264	16	279										-	302	75	377
4e.4.10	ISFSI Insurance							37	7	44										-	42	11	53
4e.4.11	ISFSI Security							662	132	794										-	756	189	945
4e.4.12	Security Staff Cost							205	31	236										-	234	59	293
4e.4.13	DOC Staff Cost							560	84	644										-	640	160	800
4e.4.14	Utility Staff Cost							1,854	278	2,133										-	2,118	530	2,648
4e.4	Subtotal Period 4b Period Dependent Cost		577	2	1		17	3,816	733	5,146	123					659	2	1		35	4,360	1,264	6,322
4e.0 TOTAL PERIOD 4e COST			577	2	1		17	11,507	2,808	14,911	123					659	2	1		35	13,147	3,461	17,306
PERIOD 4 TOTALS		1,683	26,416	2,612	4,821	7,458	46,588	78,486	32,190	200,254	312,254	3,028	423		1,923	30,182	2,984	5,508	8,521	91,925	89,675	57,680	288,398
PERIOD 5b - Site Restoration																							
Period 5b Direct Decommissioning Activities																							
Site Closeout Activities																							
5b.1.1	Grade and landscape site		33						5	38						38				-		9	47
5b.1.2	Final report to NRC							156	23	180										-	178	45	223
5b.1	Subtotal Period 5b Activity Costs		33					156	28	218						38				-	178	54	270
Period 5b Additional Costs																							
5b.2.1	Backfill Site	227							34	261					259					-		65	324
5b.2	Subtotal Period 5b Additional Costs	227							34	261					259					-		65	324
Period 5b Collateral Costs																							
5b.3.1	Small tool allowance		16						2	18						18				-		5	23
5b.3	Subtotal Period 5b Collateral Costs		16						2	18						18				-		5	23
Period 5b Period - Dependent Costs																							

HUMBOLDT BAY POWER PLANT UNIT 3
AREA-BY-AREA ESTIMATE

		(Thousands of 2004 dollars)									Disposable Waste				(Thousands of 2007 dollars)								
															(Escalated @ 16.99% from 2004; Revised Contingency to 25%; Revised Class A Burial Rate from $140/cf to $248/cf.)								
	Activity	2004 Decon	2004 Remove	2004 Pack	2004 Transport	2004 Off Site Process	2004 LLRW Disposal	2004 Other	2004 Contgncy	2004 Total	A CF	B CF	C CF	GTCC	2007 Decon	2007 Remove	2007 Pack	2007 Transport	2007 Off Site Process	2007 LLRW Disposal	2007 Other	2007 Contgncy	2007 Total
5b.4.1	Insurance							20	2	22										-	23	6	29
5b.4.2	Property taxes									b										-			b
5b.4.3	Heavy equipment rental		1,036						155	1,192						1,184				-		296	1,480
5b.4.4	Plant energy budget							7	1	8										-	8	2	10
5b.4.5	NRC ISFSI Fees							163	33	196										-	186	47	233
5b.4.6	Emergency Planning Fees							38	4	42										-	43	11	54
5b.4.7	ISFSI O&M and Contract Oversight							3,662	22	384										-	4,184	1,046	5,230
5b.4.8	ISFSI Insurance							51	10	61										-	58	15	73
5b.4.9	ISFSI Security							910	182	1,092										-	1,040	260	1,300
5b.4.10	Security Staff Cost							228	34	262										-	261	65	326
5b.4.11	DOC Staff Cost							493	74	567										-	563	141	704
5b.4.12	Utility Staff Cost							1,175	176	1,351										-	1,343	336	1,678
5b.4	Subtotal Period 5b Period-Dependent Cost		1,036					3,447	693	5,177						1,184				-	3,938	1,281	6,403
5b.0	TOTAL PERIOD 5b COST		1,311					3,603	758	5,673						1,498				-	4,117	1,404	7,018
PERIOD 5c - Fuel Storage Operations/Shipping																							
Period 5c Collateral Costs																							
5c.3.1	Spent Fuel Transfer							405	81	486										-	463	116	578
5c.3	Subtotal Period 5c Collateral Costs							405	81	486										-	463	116	578
Period 5c Period-Dependent Costs																							
5c.4.1	Property taxes									b										-			b
5c.4.2	Plant energy budget							16	2	18										-	18	5	23
5c.4.3	NRC ISFSI Fees							1,007	201	1,208										-	1,151	288	1,438
5c.4.4	Emergency Planning Fees							272	27	299										-	311	78	388
5c.4.5	ISFSI Construction & Cask Fabrication							3,194	c	3,194										-	3,649	912	4,562
5c.4.6	ISFSI O&M and Contract Oversight							2,238	134	2,372										-	2,557	639	3,196
5c.4.7	ISFSI Insurance							298	60	357										-	340	85	426
5c.4.8	ISFSI Security							5,608	1,122	6,730										-	6,407	1,602	8,009
5c.4.9	Utility Staff Cost																			-			
5c.4	Subtotal Period 5c Period-Dependent Cost							12,632	1,546	14,178										-	14,433	3,608	18,041
5c.0	TOTAL PERIOD 5c COST							13,037	1,627	14,664										-	14,896	3,724	18,619
PERIOD 5d - GTCC shipping																							
Period 5d Direct Decommissioning Costs																							
Nuclear Steam Supply System Removal																							
5d.1.1.1	Vessel & Internals GTCC Disposal						365		55	419				17						417		104	521
5d.1	Subtotal Period 5d Activity Costs						365		55	419				17						417		104	521
Period 5d Period-Dependent Costs																							
5d.4.1	Property taxes									b										-			b
5d.4.2	Plant energy budget																			-			
5d.4.3	NRC ISFSI Fees							8	2	10										-	9	2	11
5d.4.4	Emergency Planning Fees							2		2										-	2	1	3
5d.4.5	ISFSI O&M and Contract Oversight							18	1	19										-	21	5	26
5d.4.6	ISFSI Insurance							2		3										-	2	1	3
5d.4.7	ISFSI Security							45	9	54										-	51	13	64
5d.4.8	Utility Staff Cost																			-			
5d.4	Subtotal Period 5d Period-Dependent Cost							76	12	88										-	87	22	109
5d.0	TOTAL PERIOD 5d COST						365	76	67	508										417	87	126	630
PERIOD 5e - ISFSI Decontamination																							
Period 5e Additional Costs																							
5e.2.1	ISFSI Decontamination		104	8	3		106	986	241	1,447	754					119	9	3		215	1,127	368	1,841
5e.2	Subtotal Period 5e Additional Costs		104	8	3		106	986	241	1,447	754					119	9	3		215	1,127	368	1,841
Period 5e Collateral Costs																							
5e.3.1	Small tool allowance																						
5e.3	Subtotal Period 5e Collateral Costs																						
Period 5e Period-Dependent Costs																							
5e.4.1	Property taxes									b													b
5e.4.2	Heavy equipment rental		137						20	157						157				-		39	196
5e.4.3	Plant energy budget							3		4										-	3	1	4
5e.4.4	NRC ISFSI Fees							196	39	235										-	224	56	280
5e.4.5	ISFSI O&M and Contract Oversight							146	9	155										-	167	42	209
5e.4.6	ISFSI Insurance							56	6	61										-	64	16	80
5e.4.7	ISFSI Security							1,088	218	1,306										-	1,243	311	1,554
5e.4.8	Utility Staff Cost																			-			
5e.4	Subtotal Period 5e Period-Dependent Cost		137					1,489	292	1,917						157				-	1,701	464	2,322
5e.0	TOTAL PERIOD 5e COST		241	8	3		106	2,475	533	3,364						275	9	3		121	2,828	809	4,046
PERIOD 5f - ISFSI Site Restoration																							
Period 5f Additional Costs																							
5f.2.1	ISFSI Demolition		211					41	50	302						241				-	47	72	360
5f.2	Subtotal Period 5f Additional Costs		211					41	50	302						241				-	47	72	360
Period 5f Collateral Costs																							
5f.3.1	Small tool allowance		1							2						1				-		0	1
5f.3	Subtotal Period 5f Collateral Costs		1							2						1				-		0	1

HUMBOLDT BAY POWER PLANT UNIT 3
AREA-BY-AREA ESTIMATE

		(Thousands of 2004 dollars)									Disposable Waste				(Thousands of 2007 dollars) (Escalated @ 16.99% from 2004; Revised Contingency to 25%; Revised Class A Burial Rate from $140/cf to $248/cf.)								
	Activity	2004 Decon	2004 Remove	2004 Pack	2004 Transport	2004 Off Site Process	2004 LLRW Disposal	2004 Other	2004 Contgncy	2004 Total	A CF	B CF	C CF	GTCC	2007 Decon	2007 Remove	2007 Pack	2007 Transport	2007 Off Site Process	2007 LLRW Disposal	2007 Other	2007 Contgncy	2007 Total
Period 5f Period-Dependent Costs																							
5f.4.1	Property taxes									b										-			b
5f.4.2	Heavy equipment rental		179						27	206						205				-		51	256
5f.4.3	Plant energy budget							6	1	7										-	7	2	9
5f.4.4	ISFSI O&M and Contract Oversight							293	29	322										-	335	84	418
5f.4	Subtotal Period 5f Period-Dependent Cost		179					299	57	536						205				-	342	137	683
5f.0	TOTAL PERIOD 5f COST		391					340	108	839						447				-	388	209	1,044
PERIOD 5 TOTALS			1,944	8	3		470	19,531	3,092	25,047	754			17		2,221	9	3		630	22,315	6,295	31,474
TOTAL COST TO DECOMMISSION		2,553	30,115	2,631	4,831	7,719	47,117	181,051	41,407	317,424	313,430	3,028	423	17	2,917	34,408	3,008	5,520	8,819	92,675	206,862	88,552	442,759

End Notes:
a - indicates that this activity performed by decommissioning staff
b - property taxes not included in the cost estimate
c - indicates activities under contract with zero contingency applied

Humboldt Bay Power Plant Unit 3
Decommissioning Cash Flow
(Estimated in 2007 Dollars)

(1 page)

Humboldt Bay Power Plant Unit 3
Decommissioning Cash Flow (Note 1)
(Estimated in 2007 Dollars)

Year	NRC Scope (Radiological)	Non-NRC Scope (Non-Radiological)	ISFSI Engr/License Construction Operation (Note 1)	Total	Cummulative Decommission Estimate	Trust Account Funding (Note 2)
1996	$1,678,452			$1,678,452	$1,678,452	
1997	$8,663,216			$8,663,216	$10,341,669	
1998	$5,573,757		$344,408	$5,918,165	$16,259,834	
1999	$723,490		$2,281,454	$3,004,944	$19,264,778	
2000	$85,241		$2,736,091	$2,821,331	$22,086,109	
2001	$89,543		$398,012	$487,555	$22,573,664	
2002	$994,127		$113,704	$1,107,831	$23,681,495	
2003	$494,838		$2,539,476	$3,034,313	$26,715,809	
2004	$491,070		$1,444,628	$1,935,698	$28,651,506	
2005	$161,506		$1,671,769	$1,833,274	$30,484,781	
2006	$1,073,611		$3,546,617	$4,620,228	$35,105,008	$31,292,432
2007	$3,869,668	$1,359,945	$18,495,038	$23,724,651	$58,829,659	$360,054,073
2008	$62,525,843	$755,525	$11,572,800	$74,854,168	$133,683,827	
2009	$58,286,101	$755,526	$13,303,300	$72,344,927	$206,028,754	
2010	$60,014,121	$755,526	$5,705,500	$66,475,147	$272,503,901	
2011	$104,957,387	$4,570,931	$4,330,900	$113,859,218	$386,363,119	
2012	$33,118,519		$4,330,900	$37,449,419	$423,812,538	**$391,346,505**
2013			$4,330,900	$4,330,900	$428,143,438	
2014			$4,330,900	$4,330,900	$432,474,338	
2015			$10,285,100	$10,285,100	$442,759,438	
2016				$0	$442,759,438	
2017				$0	$442,759,438	
2018				$0	$442,759,438	
2019				$0	$442,759,438	
2020				$0	$442,759,438	
TOTAL	$342,800,490	$8,197,453	$91,761,496	$442,759,438		

Notes:

1) Cash Flow is based on construction of ISFSI and Fuel removed from HBPP in 2015 (Assumes DOE Used Fuel Repository opens prior to 2015 allowing HBPP Fuel to be shipped by 2015)
2) Trust Account Value of $360.1 million is Expense Equivalent Liquidation Value (Includes Tax Break) Market Value of Trust as of 12/06 was $304.4 million, expended as of 12/06 was $35.1 million
3) Assumes CPUC recommendation of burial costs of $248.46/cf for LLRW in Decision 03-10-014
4) Assumes CPUC recommendation of 25% contingency in Decision 07-01-003